SFP-10GBASE-T-AO-10PK

10PK MSA Compliant 100/1000/10000Base-TX SFP+ Transceiver (Copper, 30m, RJ-45)

Features:

- SFF-8432 Compliance
- RJ-45 Connector
- Commercial Temperature 0 to 70 Celsius
- Copper Media Type
- Hot Pluggable
- Excellent ESD Protection
- Metal with Lower EMI
- RoHS Compliant and Lead Free

Applications:

- 10GBase Ethernet
- Access and Enterprise

Product Description

This 10-pack of MSA compliant SFP+ transceivers provides 100/1000/10000Base-TX throughput up to 30m over a copper connection via a RJ-45 connector. It can operate at temperatures between 0 and 70C. Each TX module supports 100/1000/10000Base auto-negotiation and can be configured to fit your needs. All of our transceivers are built to comply with Multi-Source Agreement (MSA) standards and are uniquely serialized and tested for data-traffic and application to ensure seamless network integration. We stand behind the quality of our products and proudly offer a limited lifetime warranty.

AddOn's transceivers are RoHS compliant and lead-free.

Absolute Maximum Ratings

Parameter	Symbol	Min.	Max.	Unit
Maximum Supply Voltage	Vcc	3.135	3.6	VDC
Storage Temperature	TS	-40	85	°C
Operating Case Temperature	Tc	0	70	°C
Operating Humidity	RH	5	95	%
Maximum Bitrate	B_{max}		11.4	Gbps

Electrical Characteristics (TOP=25°C, Vcc=3.3Volts)

Parameter	Symbol	Min.	Typ.	Max.	Unit	Notes
Power Supply Voltage	Vcc	3.135	3.30	3.465	V	
Low Speed Input Voltage		-0.5		Vcc+0.3	V	
Two-Wire Interface Input Voltage		-0.3		Vcc+0.5	V	
Power (30m @ 25C ambient)			2.3	2.5	W	

Pin Descriptions

Pin	Symbol	Name/Descriptions	Ref.
1	VeeT	Transmitter Ground	1
2	Tx_Fault	Transmitter Fault LVTTL-O	
3	Tx_Disable	Transmitter Disable LVTTL-I	
4	SDA	2-wire Serial Interface Data Line LVTTL-I/O	
5	SCL	2-wire Serial Interface Clock LVTTL-I/O	
6	Mod_ABS	Module Absent, connect to VeeT or VeeR in the module	
7	RS0	Rate Select 0 LVTTL-I	
8	Rx_LOS	Receiver Loss of Signal Indication LVTTL-O	
9	RS1	Rate Select 1 LVTTL-I	
10	VeeR	Receiver Ground	1
11	VeeR	Receiver Ground	1
12	RD-	Receiver Inverted Data Output CML-O	
13	RD+	Receiver Non-Inverted Data Output CML-O	
14	VeeR	Receiver Ground	1
15	VccR	Receiver 3.3V Supply	
16	VccT	Transmitter 3.3V Supply	
17	VeeT	Transmitter Ground	1
18	TD+	Receiver Inverted Data Output CML-I	
19	TD-	Transmitter Inverted Data Input CML-I	
20	VeeT	Module Transmitter Ground	1

Notes:

1. The module signal grounds should be isolated from the module case.

Mechanical Specifications

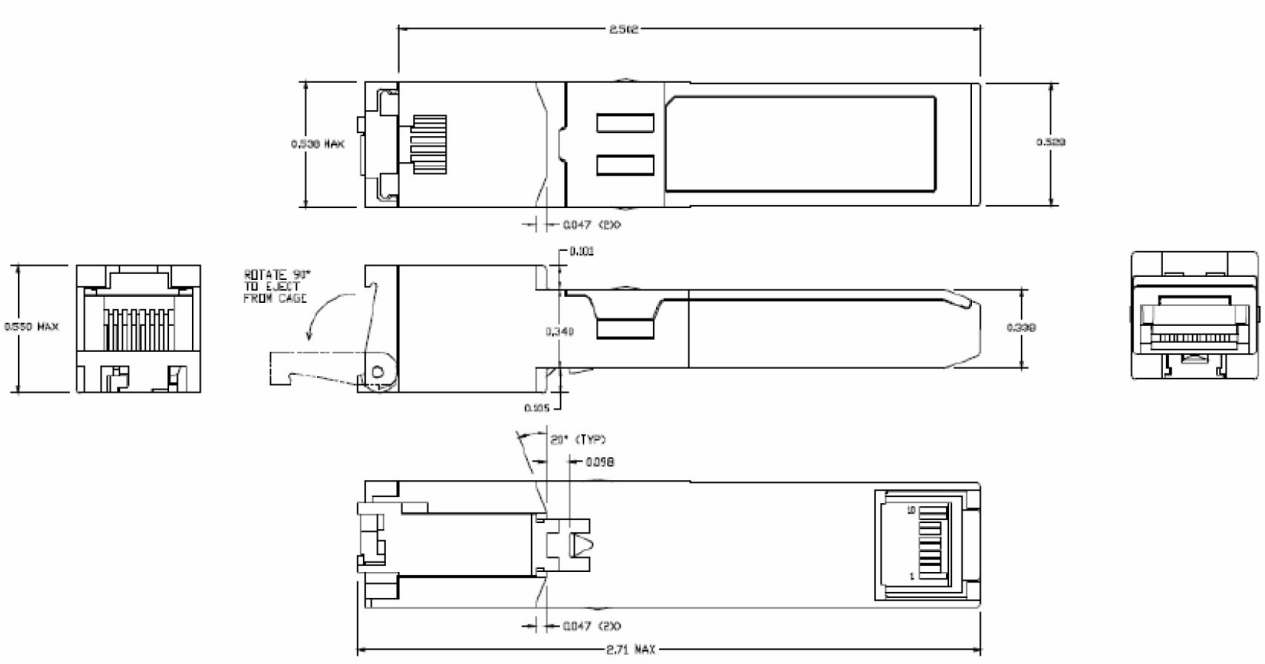

About AddOn Networks

In 1999, AddOn Networks entered the market with a single product. Our founders fulfilled a severe shortage for compatible, cost-effective optical transceivers that compete at the same performance levels as leading OEM manufacturers. Adhering to the idea of redefining service and product quality not previously had in the fiber optic networking industry, AddOn invested resources in solution design, production, fulfillment, and global support.

Combining one of the most extensive and stringent testing processes in the industry, an exceptional free tech support center, and a consistent roll-out of innovative technologies, AddOn has continually set industry standards of quality and reliability throughout its history.

Reliability is the cornerstone of any optical fiber network and is ingrained in AddOn's DNA. It has played a key role in nurturing the long-term relationships developed over the years with customers. AddOn remains committed to exceeding industry standards with certifications ranging from NEBS Level 3 to ISO 9001:2015 with every new development while maintaining the signature reliability of its products.

U.S. Headquarters

Email: sales@addonnetworks.com

Telephone: +1 877.292.1701

Fax: 949.266.9273

Europe Headquarters

Email: salesemea@addonnetworks.com

Telephone: +44 1285 842070