MA-QSFP-100G-SR4-AO

Cisco Meraki® MA-QSFP-100G-SR4 Compatible TAA 100GBase-SR4 QSFP28 Transceiver (MMF, 850nm, 100m, MPO, DOM)

Features

- SFF-8665 Compliance
- MPO Connector
- Commercial Temperature 0 to 70 Celsius
- Multi-mode Fiber
- Hot Pluggable
- Excellent ESD Protection
- Metal with Lower EMI
- RoHS Compliant and Lead Free

Applications

- 100GBase Ethernet
- Access and Enterprise

Product Description

This Cisco Meraki® MA-QSFP-100G-SR4 compatible QSFP28 transceiver provides 100GBase-SR4 throughput up to 100m over OM4 multi-mode fiber (MMF) using a wavelength of 850nm via an MPO connector. It is guaranteed to be 100% compatible with the equivalent Cisco Meraki® transceiver. This easy to install, hot swappable transceiver has been programmed, uniquely serialized and data-traffic and application tested to ensure that it will initialize and perform identically. Digital optical monitoring (DOM) support is also present to allow access to real-time operating parameters. This transceiver is Trade Agreements Act (TAA) compliant. We stand behind the quality of our products and proudly offer a limited lifetime warranty.

AddOn's transceivers are RoHS compliant and lead-free.

TAA refers to the Trade Agreements Act (19 U.S.C. & 2501-2581), which is intended to foster fair and open international trade. TAA requires that the U.S. Government may acquire only "U.S. – made or designated country end products."

Rev. 040523

Absolute Maximum Ratings

Parameter	Symbol	Min.	Typ.	Max.	Unit	Notes
Maximum Supply Voltage	Vcc	-0.5		4.0	V	
Storage Temperature	T_S	-40		+85	°C	
Relative Humidity	RH	5		95	%	
Operating Case Temperature	T_C	0	25	70	°C	
Data Rate PER Channel	DR		25.78125		Gb/s	

Electrical Characteristics

Parameter	Symbol	Min.	Typ.	Max.	Unit	Notes
Supply Voltage	V_{CC}	3.135	3.3	3.465	V	
Module Supply Current	Icc			750	mA	
Power Dissipation	P_D			2.5	W	
Transmitter						
Input Differential Impedance	ZIN		100		Ω	
Differential Data Input Swing	$V_{IN, P-P}$	180		900	mVp-p	
Receiver						
Output Differential Impedance	Zo		100		Ω	
Differential Data Output Swing	$V_{OUT, P-P}$	300		850	mVp-p	1
Transition Time (20% to 80%)	Tr,Tf	12			ps	

Notes:

1. The optical power is launched into OM3 MMF.
2. Measured with a PRBS 2^{31}-1 test pattern @25.78125Gbps.

Optical Characteristics

Parameter	Symbol	Min.	Typ.	Max.	Unit.	Notes
Transmitter						
Launch Optical Power	Po	-8.4		+2.4	dBm	1
Center Wavelength Range	λc	840	850	860	nm	-
Extinction Ratio	EX	2			dB	2
Spectral width (RMS)	Δλ			0.6	nm	
Transmitter and Dispersion Penalty	TDP			4.3	dB	
Optical Return Loss Tolerance	ORLT			12	dB	
Eye Diagram	IEEE Std 802.3bm compatible					
Receiver						
Center Wavelength	λc	840	850	860	nm	
Average Receiver Sensitivity (P_{avg})	S			-11	dBm	3
Average Receiver Sensitivity (P_{avg})	S			-7.5	dBm	4
Receiver Overload (P_{avg})	P_{OL}	2.5			dBm	
Damage Threshold	P_{OL}	3.4			dBm	
Optical Reflectance	ORL			-12	dB	
LOS Assert	LOS_A	-30			dB	
LOS De-Assert	LOS_D			-11.5	dB	
LOS Hysteresis		0.5			dB	

Notes:

1. The optical power is launched into OM3 MMF.
2. Measured with a PRBS 2^{31}-1 test pattern @25.78125Gbps.
3. Measured with a PRBS 2^{31}-1 test pattern, 25.78125Gb/s, BER<$5E^{-5}$.
4. Measured with PRBS 2^{31}-1 test pattern, 25.78125Gb/s, BER<10^{-12}.

Pin Descriptions

Pin	Symbol	Function/Description	Notes
1	GND	Transmitter Ground (Common with Receiver Ground)	1
2	Tx2-	Transmitter Inverted Data Input	
3	Tx2+	Transmitter Non-Inverted Data output	
4	GND	Transmitter Ground (Common with Receiver Ground)	1
5	Tx4-	Transmitter Inverted Data Input	
6	Tx4+	Transmitter Non-Inverted Data output	
7	GND	Transmitter Ground (Common with Receiver Ground)	1
8	ModSelL	Module Select	2
9	ResetL	Module Reset	2
10	VccRx	3.3V Power Supply Receiver	
11	SCL	2-Wire serial Interface Clock	2
12	SDA	2-Wire serial Interface Data	2
13	GND	Transmitter Ground (Common with Receiver Ground)	1
14	Rx3+	Receiver Non-Inverted Data Output	
15	Rx3-	Receiver Inverted Data Output	
16	GND	Transmitter Ground (Common with Receiver Ground)	1
17	Rx1+	Receiver Non-Inverted Data Output	
18	Rx1-	Receiver Inverted Data Output	
19	GND	Transmitter Ground (Common with Receiver Ground)	1
20	GND	Transmitter Ground (Common with Receiver Ground)	1
21	Rx2-	Receiver Inverted Data Output	
22	Rx2+	Receiver Non-Inverted Data Output	
23	GND	Transmitter Ground (Common with Receiver Ground)	1
24	Rx4-	Receiver Inverted Data Output	1
25	Rx4+	Receiver Non-Inverted Data Output	
26	GND	Transmitter Ground (Common with Receiver Ground)	1
27	ModPrsl	Module Present	
28	IntL	Interrupt	2
29	VccTx	3.3V power supply transmitter	
30	Vcc1	3.3V power supply	
31	LPMode	Low Power Mode	2
32	GND	Transmitter Ground (Common with Receiver Ground)	1
33	Tx3+	Transmitter Non-Inverted Data Input	
34	Tx3-	Transmitter Inverted Data Output	

35	GND	Transmitter Ground (Common with Receiver Ground)	1
36	Tx1+	Transmitter Non-Inverted Data Input	
37	Tx1-	Transmitter Inverted Data Output	
38	GND	Transmitter Ground (Common with Receiver Ground)	1

Notes:

1. The module signal grounds are isolated from the module case.
2. This is an open collector/drain output that on the host board requires a 4.7KΩ to 10KΩ pull-up resistor to VccHost.

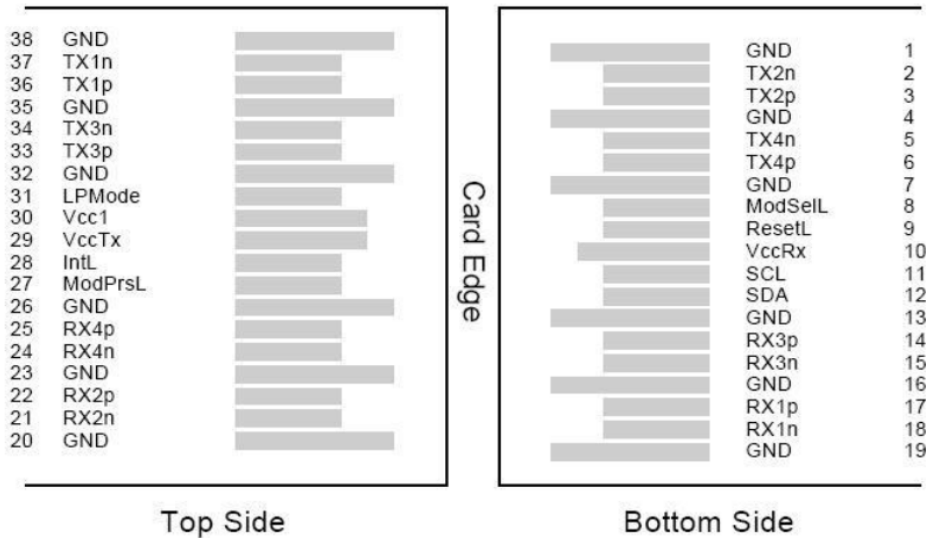

Recommended Host Board Power Supply Filter Network

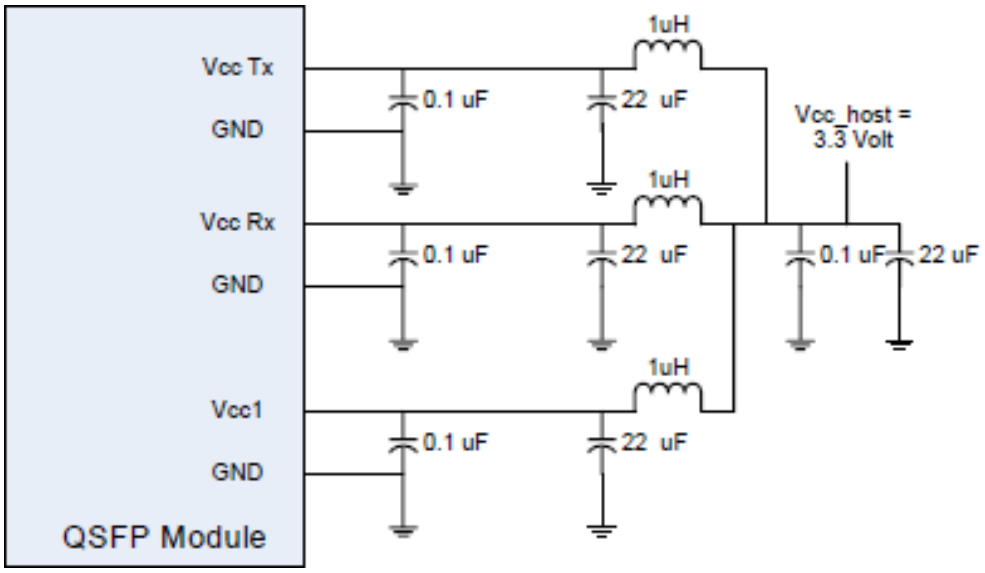

Recommended Application Interface Block Diagram

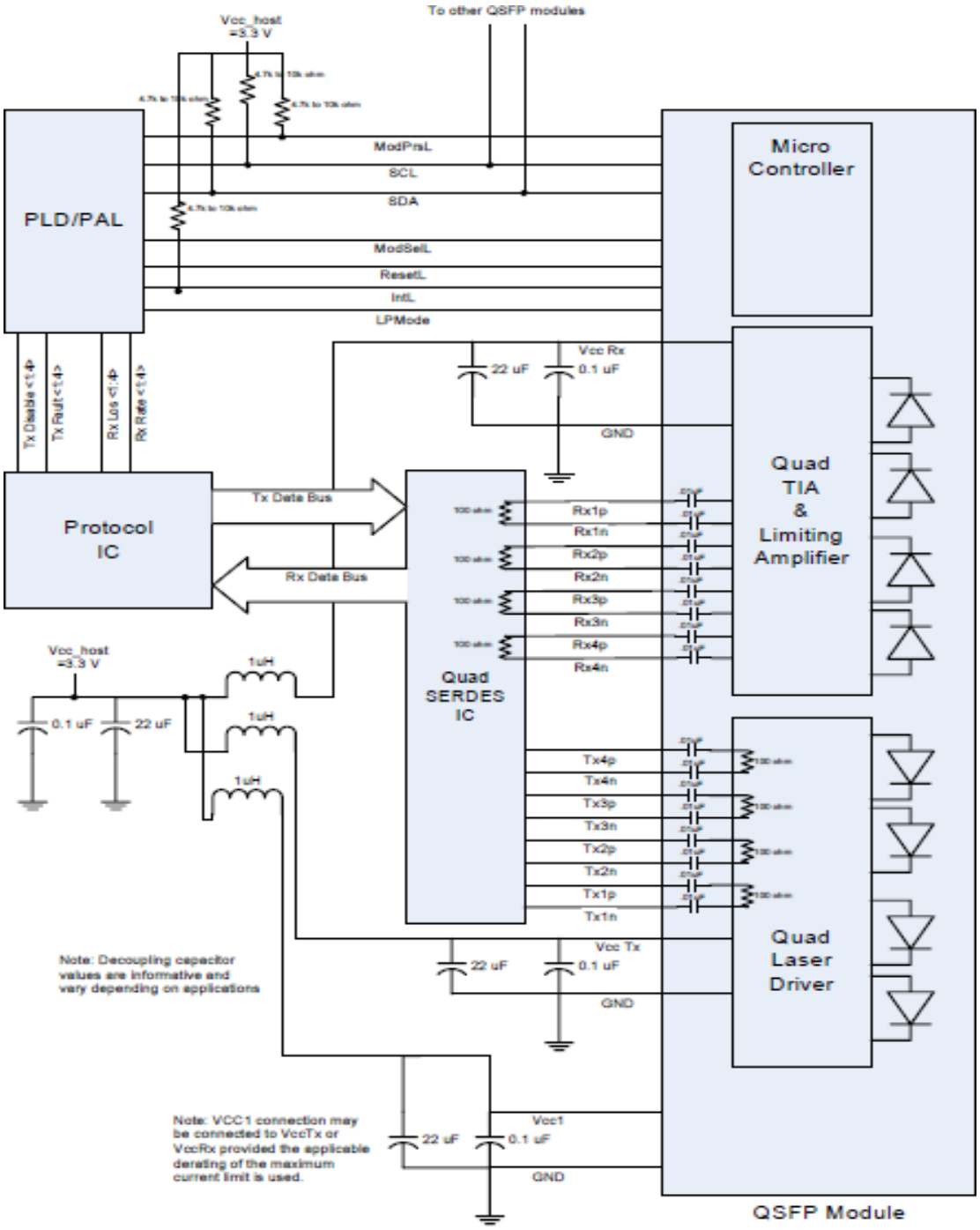

Mechanical Specifications

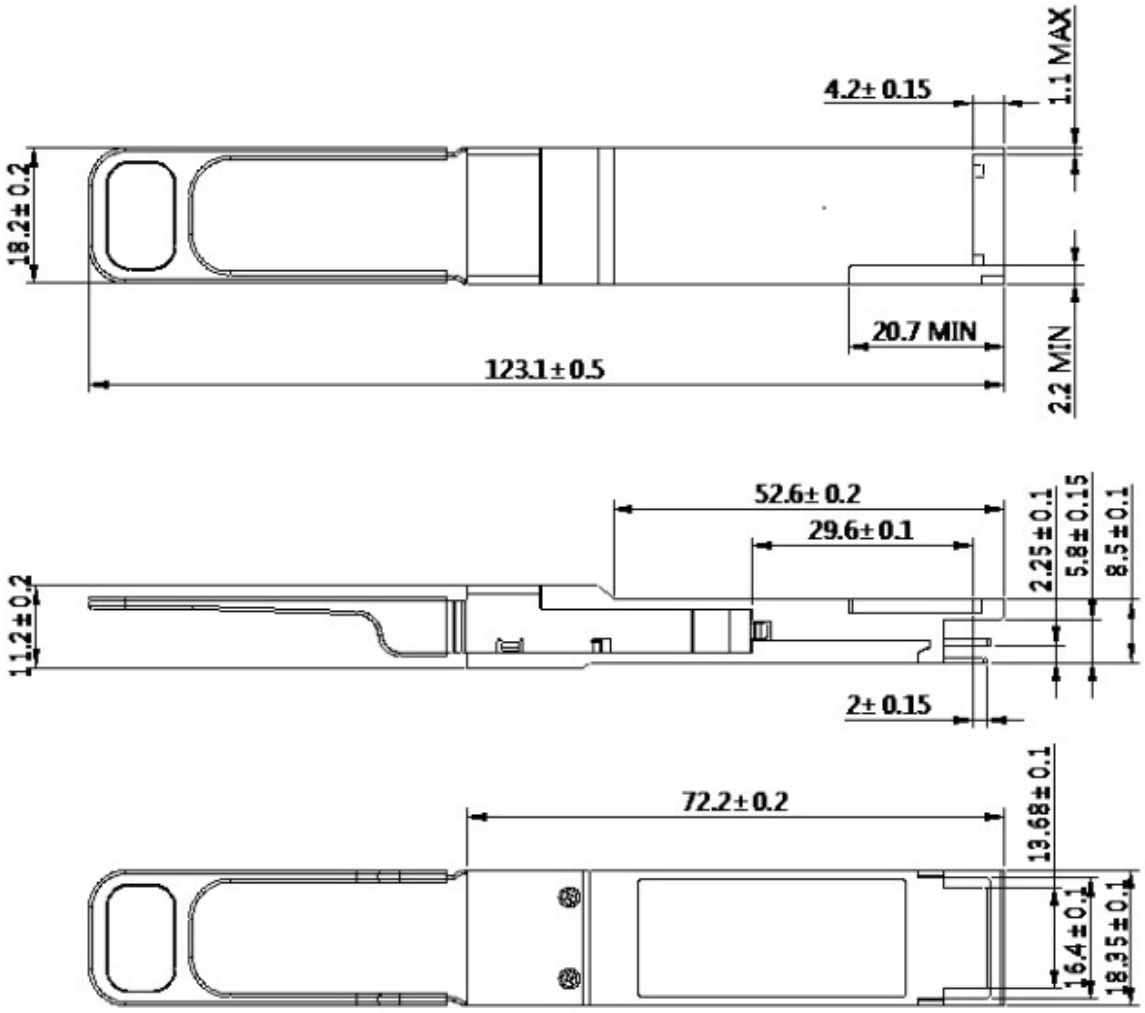

About AddOn Networks

In 1999, AddOn Networks entered the market with a single product. Our founders fulfilled a severe shortage for compatible, cost-effective optical transceivers that compete at the same performance levels as leading OEM manufacturers. Adhering to the idea of redefining service and product quality not previously had in the fiber optic networking industry, AddOn invested resources in solution design, production, fulfillment, and global support.

Combining one of the most extensive and stringent testing processes in the industry, an exceptional free tech support center, and a consistent roll-out of innovative technologies, AddOn has continually set industry standards of quality and reliability throughout its history.

Reliability is the cornerstone of any optical fiber network and is in engrained in AddOn's DNA. It has played a key role in nurturing the long-term relationships developed over the years with customers. AddOn remains committed to exceeding industry standards with certifications from ranging from NEBS Level 3 to ISO 9001:2005 with every new development while maintaining the signature reliability of its products.

U.S. Headquarters

Email: sales@addonnetworks.com

Telephone: +1 877.292.1701

Fax: 949.266.9273

Europe Headquarters

Email: salessupportemea@addonnetworks.com

Telephone: +44 1285 842070