Maintenance and Service Guide

SUMMARY

This guide provides maintenance information about such topics as spare parts, removal and replacement of parts, security, and backing up.

© Copyright 2023 HP Development Company, L.P.

AMD and Radeon are trademarks of Advanced Micro Devices, Inc. Bluetooth is a trademark owned by its proprietor and used by HP Inc. under license. Intel and Xeon are trademarks of Intel Corporation in the U.S. and other countries. Linux is the registered trademark of Linus Torvalds in the U.S. and other countries. Microsoft and Windows are either registered trademarks or trademarks of Microsoft Corporation in the United States and/or other countries. NVIDIA®, GeForce RTX™, and Quadro RTX™ are trademarks and/or registered trademarks of NVIDIA Corporation in the U.S. and other countries. Red Hat, Inc. Red Hat, and the Red Hat logo are trademarks or registered trademarks of Red Hat, Inc. or its subsidiaries in the United States and other countries. USB Type-C® and USB-C® are registered trademarks of USB Implementers Forum. DisplayPort™ and the DisplayPort™ logo are trademarks owned by the Video Electronics Standards Association (VESA®) in the United States and other countries.

The information contained herein is subject to change without notice. The only warranties for HP products and services are set forth in the express warranty statements accompanying such products and services. Nothing herein should be construed as constituting an additional warranty. HP shall not be liable for technical or editorial errors or omissions contained herein.

First Edition: March 2023

Document Part Number: N24512-001

Product notice

This guide describes features that are common to most models. Some features may not be available on your computer.

Not all features are available in all editions or versions of Windows. Systems may require upgraded and/or separately purchased hardware, drivers, software or BIOS update to take full advantage of Windows functionality. Windows is automatically updated, which is always enabled. High-speed internet and Microsoft account required. ISP fees may apply and additional requirements may apply over time for updates. See http://www.windows.com. **If your product ships with Windows in S Mode:** Windows in S Mode works exclusively with apps from the Microsoft Store within Windows. Certain default settings, features, and apps cannot be changed. Some accessories and apps that are compatible with Windows may not work (including some antivirus, PDF writers, driver utilities, and accessibility apps), and performance may vary, even if you switch out of S Mode. If you switch to Windows, you cannot switch back to S Mode. Learn more at Windows.com/SmodeFAQ.

To access the latest user guides, go to http://www.hp.com/support, and follow the instructions to find your product. Then select **Manuals**.

Software terms

By installing, copying, downloading, or otherwise using any software product preinstalled on this computer, you agree to be bound by the terms of the HP End User License Agreement (EULA). If you do not accept these license terms, your sole remedy is to return the entire unused product (hardware and software) within 14 days for a full refund subject to the refund policy of your seller.

For any further information or to request a full refund of the price of the computer, please contact your seller.

Not all features are available in all editions of Windows. This computer may require upgraded and/or separately purchased hardware, drivers and/or software to take full advantage of Windows functionality. Go to http://www.microsoft.com for details.

Safety warning notice

Reduce the possibility of heat-related injuries or of overheating the computer by following the practices described.

⚠ **WARNING!** To reduce the possibility of heat-related injuries or of overheating the computer, do not place the computer directly on your lap or obstruct the computer air vents. Use the computer only on a hard, flat surface. Do not allow another hard surface, such as an adjoining optional printer, or a soft surface, such as pillows or rugs or clothing, to block airflow. Also, do not allow the AC adapter to come into contact with the skin or a soft surface, such as pillows or rugs or clothing, during operation. The computer and the AC adapter comply with the user-accessible surface temperature limits defined by applicable safety standards.

Table of contents

1 Computer features 1

Front 1

Left 1

Rear 2

Product specifications 3

2 Illustrated parts catalog 4

Computer major components 4

3 Routine care, drive guidelines, and disassembly preparation 7

Electrostatic discharge information 7

Generating static electricity 7

Preventing electrostatic damage to equipment 8

Personal grounding methods and equipment 8

Grounding the work area 9

Recommended materials and equipment 9

Operating guidelines 10

Routine care 10

General cleaning safety precautions 10

Removing dirt and debris from your computer 11

Cleaning your computer with a disinfectant 11

Cleaning the computer case 12

Cleaning the keyboard 12

Cleaning the monitor 13

Cleaning the mouse 13

Service considerations 13

Tools and software requirements 13

Screws 14

Cables and connectors 14

Hard drives 14

Lithium coin cell battery 14

SATA hard drives 15

Cable management 15

4 Removal and replacement procedures 17

Preparation for disassembly 17

Feet 17

Front bezel 18

Dust filter 19

Access panel 19

Card guide assembly 20
Handle 21
Solid-state drive 22
Memory modules (DIMMs) 23
PCIe retainer fan 26
Front card guide and fan 27
Memory fan 28
Expansion card 29
I/O assembly 31
Optical drive carrier 32
Interlock assembly 33
Battery 34
Hard drive 35
Rear fan 36
Heat sink 37
Processor 38
Power supply 40
System board 41

5 Troubleshooting without diagnostics 43

Before you call for technical support 43
Helpful hints 44
Solving general problems 44
Cannot access the Computer Setup (F10) Utility when booting the computer 44
Computer appears locked up and will not turn off when the power button is pressed 45
Computer will not respond to keyboard or mouse 45
Computer date and time display is incorrect 45
There is no sound or sound volume is too low 45
Cannot remove computer cover or access panel 46
Poor performance 46
System does not turn on and the lights on the front of the computer are not blinking 47
Solving power problems 47
Computer will not turn on 47
Three red blinks then seven white blinks 48
Power supply shuts down intermittently 48
Solving hard drive problems 48
Hard drive error occurs 48
Disk drive transaction problem 48
Drive not found (identified) 49
Nonsystem disk/NTLDR missing message 49
Computer will not boot from hard drive 49
Computer seems to be locked up 50

Solving audio problems 50
Sound cuts in and out 50
Sound does not come out of the speaker or headphones 50
Computer appears to be locked up while recording audio 51
Line-in jack is not functioning properly 51
Solving printer problems 51
Printer will not print 51
Printer will not turn on 51
Printer prints garbled information 52
Solving keyboard and mouse problems 52
Keyboard commands and typing are not recognized by the computer 52
Mouse does not respond to movement or is too slow 52
Solving hardware installation problems 53
A new device is not recognized as part of the system 53
Computer will not start 53
Solving network problems 54
Network driver does not detect network controller 54
Network status link light never blinks 54
Diagnostics reports a failure 55
Diagnostics passes, but the computer does not communicate with the network 55
Network controller stopped working when an expansion board was added to the computer 55
Network controller stops working without apparent cause 55
Cannot connect to network server when attempting remote system installation 56
Solving memory problems 56
System will not boot or does not function properly after installing additional memory modules 56
Out of memory error 56
Memory count during POST is wrong 57
Insufficient memory error during operation 57
Solving USB flash drive problems 57
USB flash drive is not seen as a drive letter in Windows 57
USB flash drive not found (identified) 57
System will not boot from USB flash drive 57
Solving internet access problems 58
Unable to connect to the internet 58
Cannot automatically launch internet programs 58
Solving software problems 58
Computer will not start up and the HP logo does not appear 59
“Illegal Operation has Occurred” error message is displayed 59
6 Computer Setup (F10) Utility 60
Using Computer Setup (F10) Utilities 60
Computer Setup Main 61
Computer Setup Security 65
Computer Setup Advanced 71
7 POST error messages 81

POST numeric codes and text messages 81
Interpreting POST diagnostic front panel lights and audible codes 87

8 Password security and resetting CMOS 90

Changing a setup or power-on password 90
Deleting a setup or power-on password 90

9 Backing up, restoring, and recovering 92

Backing up information and creating recovery media 92
Using Windows tools for backing up 92
Using the HP Cloud Recovery Download Tool to create recovery media (select products only) 92
Restoring and recovering your system 93
Creating a system restore 93
Restoring and recovery methods 93
Recovering using HP Recovery media 93
Changing the computer boot order 94
Using HP Sure Recover (select products only) 94

10 Using HP PC Hardware Diagnostics 95

Using HP PC Hardware Diagnostics Windows (select products only) 95
Using an HP PC Hardware Diagnostics Windows hardware failure ID code 95
Accessing HP PC Hardware Diagnostics Windows 95
Accessing HP PC Hardware Diagnostics Windows from HP Support Assistant 95
Accessing HP PC Hardware Diagnostics Windows from the Start menu (select products only) 96
Downloading HP PC Hardware Diagnostics Windows 96
Downloading the latest HP PC Hardware Diagnostics Windows version from HP 96
Downloading the HP PC Hardware Diagnostics Windows from the Microsoft Store 96
Downloading HP Hardware Diagnostics Windows by product name or number (select products only) 96
Installing HP PC Hardware Diagnostics Windows 97
Using HP PC Hardware Diagnostics UEFI 97
Using an HP PC Hardware Diagnostics UEFI hardware failure ID code 97
Starting HP PC Hardware Diagnostics UEFI 97
Starting HP PC Hardware Diagnostics UEFI through HP Hotkey Support software (select products only) 98
Downloading HP PC Hardware Diagnostics UEFI to a USB flash drive 98
Downloading the latest HP PC Hardware Diagnostics UEFI version 98
Downloading HP PC Hardware Diagnostics UEFI by product name or number (select products only) 98
Using Remote HP PC Hardware Diagnostics UEFI settings (select products only) 99
Downloading Remote HP PC Hardware Diagnostics UEFI 99
Downloading the latest Remote HP PC Hardware Diagnostics UEFI version 99
Downloading Remote HP PC Hardware Diagnostics UEFI by product name or number 99
Customizing Remote HP PC Hardware Diagnostics UEFI settings 99

11 Statement of memory volatility 101

Current BIOS steps 101
Nonvolatile memory usage 103

Questions and answers 105
Using HP Sure Start (select products only) 106
12 Power cord set requirements 108
General requirements 108
Japanese power cord requirements 108
Country-specific requirements 108
13 Specifications 110
14 Linux technical notes 111
System RAM 111
Audio 111
Hyper-Threading Technology 112
NVIDIA graphics workstations 112
AMD graphics workstations 113
Index 114

1 Computer features

This chapter provides you with an overview of your computer's features.

Front

To identify the front panel components, use this illustration and table.

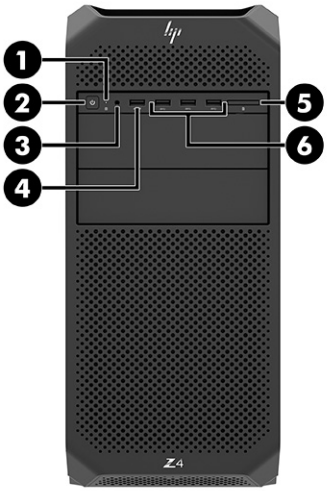

Table 1-1 Front components and their descriptions

Item	Icon	Component	Item	Icon	Component
(1)		Hard drive activity light	(4)		USB SuperSpeed port with HP Sleep and Charge
(2)		Power button	(5)		Memory card reader
(3)		Audio-out (headphone)/Audio-in (microphone) combo jack	(6)		USB SuperSpeed 5 Gbps ports (3)

Left

To identify the left side panel components, use this illustration and table.

NOTE: A sensor detects when the left cover is removed. The cover must be installed for the computer to turn on. Removing the left cover during operation will cause the computer to turn off.

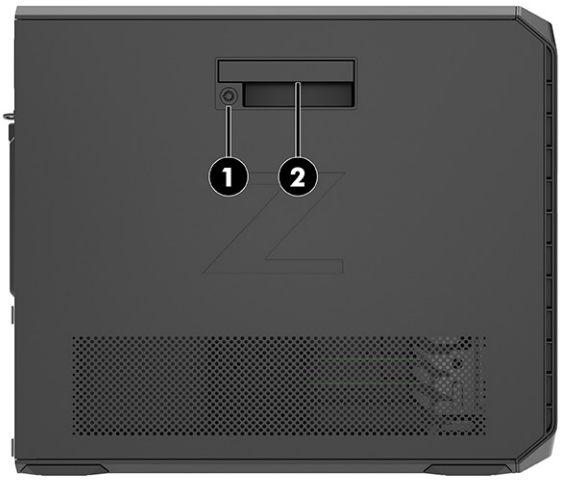

Table 1-2 Left side panel components

Item	Component
1	Left side access panel lock
2	Left side access panel handle

Rear

To identify the rear panel components, use this illustration and table.

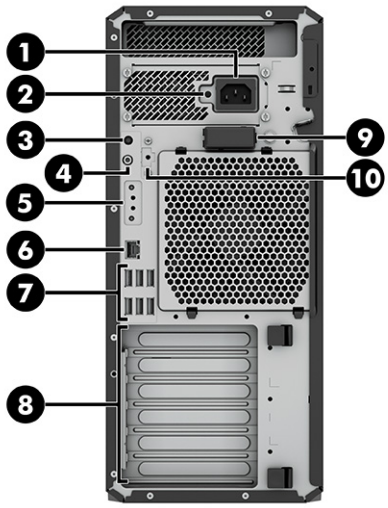

Table 1-3 Rear components and their descriptions

Item	Icon	Component	Item	Icon	Component
1		Power connector	6		RJ-45 (network) jack with Active Management Technology (AMT)

Table 1-3 Rear components and their descriptions (continued)

Item	Icon	Component	Item	Icon	Component
2		Built-In Self-Test (BIST) LED	7	SS	USB SuperSpeed 5 Gbps ports (6)
3		Power button	8		PCIe card slots (6)
4		Audio-out (headphone)/Audio-in (microphone) combo jack	9		Antenna cover
5		HP flex IO port (select products only)	10		Remote interface (select products only)

NOTE: The labels for the rear panel connectors use industry-standard icons and colors.

Product specifications

Read this section to learn where to find the technical specifications about your computer.

To find the QuickSpecs for your product, go to http://www.hp.com/go/quickspecs, and then select the **Search all QuickSpecs** link. Type your model name in the search box, and then select **Go**.

– or –

Go to http://www.hp.com/support, and follow the instructions to find your product. Select **Product Information**, and then select your computer specifications.

2 Illustrated parts catalog

Use this information to determine the spare parts that are available for the computer.

NOTE: HP continually improves and changes product parts. For complete and current information about supported parts for your computer, go to http://partsurfer.hp.com, select your country or region, and then follow the on-screen instructions.

Computer major components

To identify the computer major components, use this illustration and table.

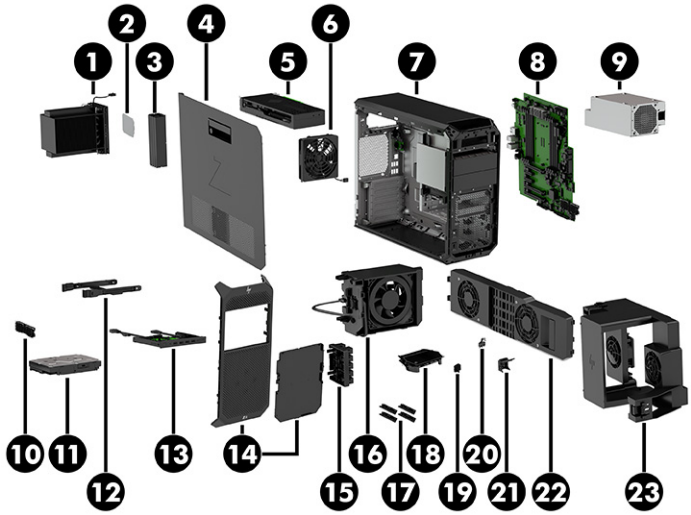

Table 2-1 Computer major components and their descriptions

Item	Description
(1)	**Heat sink**, standard
	Heat sink, premium (not illustrated)
(2)	**Processor**
	Intel® Xeon® W7-2495X processor
	Intel Xeon W7-2475X processor
	Intel Xeon W7-2465X processor
	Intel Xeon W5-2455X processor
	Intel Xeon W5-2445X processor
	Intel Xeon W3-2435X processor
	Intel Xeon W3-2425X processor
	Intel Xeon W3-2423X processor

Table 2-1 Computer major components and their descriptions (continued)

Item	Description
(3)	**Memory module** (DDR5-4800, ECC)
	64 GB
	32 GB
	16 GB
	16 GB, NMIC
(4)	**Access panel**
(5)	**Graphics card**
	NVIDIA® GeForce RTX™ 3090
	NVIDIA GeForce RTX 3080
	NVIDIA GeForce RTX 3070
	NVIDIA GeForce RTX 3060
	NVIDIA Quadro™ RTX A6000
	NVIDIA Quadro RTX A5000
	NVIDIA Quadro RTX A5000E
	NVIDIA Quadro RTX A4500
	NVIDIA Quadro RTX A4000
	NVIDIA Quadro RTX A4000E
	NVIDIA Quadro RTX A2000
	NVIDIA Quadro RTX A2000E
	NVIDIA T1000
	NVIDIA T1000E
	NVIDIA T400
	AMD® Radeon™ RX6700XT
	AMD Radeon RX6400
	AMD Radeon Pro W6800
	AMD Radeon Pro 5500
(6)	**Rear fan**
(7)	**Chassis**
(8)	**System board**
(9)	**Power supply**
	1125 W
	775 W
	525 W
(10)	**Solid-state drive**

Table 2-1 Computer major components and their descriptions (continued)

Item	Description
	4 TB
	4 TB, self-encrypting drive (SED)
	2 TB
	2 TB, self-encrypting drive (SED)
	1 TB
	1 TB, NMIC
	1 TB, self-encrypting drive (SED)
	512 GB
	512 GB, NMIC
	512 GB, self-encrypting drive (SED)
(11)	**Hard drive** (3.5 in)
	12 TB
	8 TB
	4 TB
	2 TB
	2 TB, NMIC
	1 TB
(12)	**Drive carrier**
(13)	**Front I/O assembly**
(14)	**Front bezel** (includes dust filter)
(15)	**Expansion card guide**
(16)	**Front card guide and fan** (select products only)
(17)	**Feet**
(18)	**Handle**
(19)	**Solid-state drive latch**
(20)	**Interlock switch**
(21)	**Interlock housing**
(22)	**PCI retainer fan** (select products only)
(23)	**Memory card fan** (only used with 64 GB or 32 GB of DDR5 memory)
*	**Optical drive**
	BD writer
	DVD writer
	DVD-ROM

*not illustrated

3 Routine care, drive guidelines, and disassembly preparation

This information provides general service information for the computer. Adherence to the procedures and precautions is essential for proper service.

IMPORTANT: When the computer is plugged into an AC power source, DC voltage is always applied to the system board. You must disconnect the power cord from the power source before opening the computer to prevent electric shock, system board, or component damage.

Electrostatic discharge information

A sudden discharge of static electricity from your finger or other conductor can destroy static-sensitive devices or microcircuitry. Often the spark is neither felt nor heard, but damage occurs.

An electronic device exposed to electrostatic discharge (ESD) might not appear to be affected at all and can work perfectly throughout a normal cycle. The device might function normally for a while, but it has been degraded in the internal layers, reducing its life expectancy.

Networks built into many integrated circuits provide some protection, but in many cases, the discharge contains enough power to alter device parameters or melt silicon junctions.

IMPORTANT: To prevent damage to the device when you are removing or installing internal components, observe these precautions:

- Keep components in their electrostatic-safe containers until you are ready to install them.
- Before touching an electronic component, discharge static electricity by using the guidelines described in this section.
- Avoid touching pins, leads, and circuitry. Handle electronic components as little as possible.
- If you remove a component, place it in an electrostatic-safe container.

Generating static electricity

This table shows how humidity affects the electrostatic voltage levels generated by different activities. A product can be degraded by 700 V of static electricity.

- Different activities generate different amounts of static electricity.
- Static electricity increases as humidity decreases.

Table 3-1 Static electricity occurrence based on activity and humidity

	Relative humidity		
Event	**55%**	**40%**	**10%**

Table 3-1 Static electricity occurrence based on activity and humidity (continued)

	Relative humidity		
Walking across carpet	7,500 V	15,000 V	35,000 V
Walking across vinyl floor	3,000 V	5,000 V	12,000 V
Motions of bench worker	400 V	800 V	6,000 V
Removing DIPs (dual in-line packages) from plastic tube	400 V	700 V	2,000 V
Removing DIPs from vinyl tray	2,000 V	4,000 V	11,500 V
Removing DIPs from polystyrene foam	3,500 V	5,000 V	14,500 V
Removing bubble pack from PCB (printed circuit board)	7,000 V	20,000 V	26,500 V
Packing PCBs in foam-lined box	5,000 V	11,000 V	21,000 V
Multiple electric components can be packaged in plastic tubes, trays, or polystyrene foam.			

Preventing electrostatic damage to equipment

Many electronic components are sensitive to ESD. Circuitry design and structure determine the degree of sensitivity. The following packaging and grounding precautions are necessary to prevent static electricity damage to electronic components.

- To avoid hand contact, transport products in static-safe containers such as tubes, bags, or boxes.
- Protect all electrostatic parts and assemblies with conductive or approved containers or packaging.
- Keep electrostatic-sensitive parts in their containers until they arrive at static-free stations.
- Place items on a grounded surface before removing them from their container.
- Always be properly grounded when touching a sensitive component or assembly.
- Avoid contact with pins, leads, or circuitry.
- Place reusable electrostatic-sensitive parts from assemblies in protective packaging or conductive foam.

Personal grounding methods and equipment

Use this equipment to prevent static electricity damage to electronic components.

- **Wrist straps** are flexible straps with a maximum of 1 MΩ ±10% resistance in the ground cords. To provide proper ground, a strap must be worn snug against bare skin. The ground cord must be connected and fit snugly into the banana plug connector on the grounding mat or workstation.
- **Heel straps/Toe straps/Boot straps** can be used at standing workstations and are compatible with most types of shoes or boots. On conductive floors or dissipative floor mats, use them on both feet with a maximum of 1 MΩ ±10% resistance between the operator and ground.

Table 3-2 Static shielding protection levels

Static shielding protection levels	
Method	Voltage

Table 3-2 **Static shielding protection levels (continued)**

Static shielding protection levels	
Antistatic plastic	1,500 V
Carbon-loaded plastic	7,500 V
Metallized laminate	15,000 V

Grounding the work area

To prevent static damage at the work area, use these precautions.

- Cover the work surface with approved static-dissipative material. Provide a wrist strap connected to the work surface and properly grounded tools and equipment.
- Use static-dissipative mats, foot straps, or air ionizers to give added protection.
- Handle electrostatic sensitive components, parts, and assemblies by the case or PCB laminate. Handle them only at static-free work areas.
- Turn off power and input signals before inserting and removing connectors or test equipment.
- Use fixtures made of static-safe materials when fixtures must directly contact dissipative surfaces.
- Keep work area free of nonconductive materials such as ordinary plastic assembly aids and polystyrene foam.
- Use field service tools, such as cutters, screwdrivers, and vacuums, that are conductive.

Recommended materials and equipment

HP recommends these materials and equipment to prevent static electricity.

- Antistatic tape
- Antistatic smocks, aprons, or sleeve protectors
- Conductive bins and other assembly or soldering aids
- Conductive foam
- Conductive tabletop workstations with ground cord of 1 MΩ ±10% resistance
- Static-dissipative table or floor mats with hard tie to ground
- Field service kits
- Static awareness labels
- Wrist straps and footwear straps providing 1 MΩ ±10% resistance
- Material handling packages
- Conductive plastic bags
- Conductive plastic tubes
- Conductive tote boxes

- Opaque shielding bags
- Transparent metallized shielding bags
- Transparent shielding tubes

Operating guidelines

This information details how to prevent overheating and to help prolong the life of the computer.

- Keep the computer away from excessive moisture, direct sunlight, and extremes of heat and cold.
- Operate the computer on a sturdy, level surface. Leave a 10.2 cm (4 inch) clearance on all vented sides of the computer and above the monitor to permit the required airflow.
- Never restrict the airflow into the computer by blocking any vents or air intakes. Do not place the keyboard, with the keyboard feet down, directly against the front of the desktop unit as this also restricts airflow.
- Occasionally clean the air vents on all vented sides of the computer. Lint, dust, and other foreign matter can block the vents and limit the airflow. Be sure to unplug the computer before cleaning the air vents.
- Never operate the computer with the cover or side panel removed.
- Do not stack computers on top of each other or place computers so near each other that they are subject to each other's recirculated or preheated air.
- If the computer is to be operated within a separate enclosure, intake and exhaust ventilation must be provided on the enclosure, and the same operating guidelines listed previously still apply.
- Keep liquids away from the computer and keyboard.
- Never cover the ventilation slots on the monitor with any type of material.
- Install or enable power management functions of the operating system or other software, including Sleep states.

Routine care

Use this information to properly care for your computer.

General cleaning safety precautions

Use this information to safely clean your computer.

⚠ CAUTION: To prevent electric shock or damage to components, never clean a product while it is turned on or plugged in.

- Never use solvents or flammable solutions to clean the computer.
- Never immerse any parts in water or cleaning solutions; apply any liquids to a clean cloth and then use the cloth on the component.
- Always unplug the computer when cleaning with liquids or damp cloths.
- Always unplug the computer before cleaning the keyboard, mouse, or air vents.

- Disconnect the keyboard before cleaning it.
- Wear safety glasses equipped with side shields when cleaning the keyboard.

Removing dirt and debris from your computer

Here are the recommended steps to clean dirt and debris from your computer.

1. Wear disposable gloves made of latex (or nitrile gloves, if you are latex-sensitive) when cleaning the surfaces.
2. Turn off your device and unplug the power cord and other connected external devices. Remove any installed batteries from items such as wireless keyboards.

⚠ **CAUTION:** To prevent electric shock or damage to components, never clean a product while it is turned on or plugged in.

3. Moisten a microfiber cloth with water. The cloth should be moist, but not dripping wet.

IMPORTANT: To avoid damaging the surface, avoid abrasive cloths, towels, and paper towels.

4. Wipe the exterior of the product gently with the moistened cloth.

IMPORTANT: Keep liquids away from the product. Avoid getting moisture in any openings. If liquid makes its way inside your HP product, it can cause damage to the product. Do not spray liquids directly on the product. Do not use aerosol sprays, solvents, abrasives, or cleaners containing hydrogen peroxide or bleach that might damage the finish.

5. Start with the display (if applicable). Wipe carefully in one direction, and move from the top of the display to the bottom. Finish with any flexible cables, like power cord, keyboard cable, and USB cables.
6. Be sure that surfaces have completely air-dried before turning the device on after cleaning.
7. Discard the gloves after each cleaning. Clean your hands immediately after you remove the gloves.

See Cleaning your computer with a disinfectant on page 11 for recommended steps to clean the high-touch, external surfaces on your computer to help prevent the spread of harmful bacteria and viruses.

Cleaning your computer with a disinfectant

The World Health Organization (WHO) recommends cleaning surfaces, followed by disinfection, as a best practice for preventing the spread of viral respiratory illnesses and harmful bacteria.

After cleaning the external surfaces of your computer using the steps in Removing dirt and debris from your computer on page 11, you might also choose to clean the surfaces with a disinfectant. A disinfectant that is within HP's cleaning guidelines is an alcohol solution consisting of 70% isopropyl alcohol and 30% water. This solution is also known as rubbing alcohol and is sold in most stores.

Follow these steps when disinfecting high-touch, external surfaces on your computer:

1. Wear disposable gloves made of latex (or nitrile gloves, if you are latex-sensitive) when cleaning the surfaces.

2. Turn off your device and unplug the power cord and other connected external devices. Remove any installed batteries from items such as wireless keyboards.

⚠ **CAUTION:** To prevent electric shock or damage to components, never clean a product while it is turned on or plugged in.

3. Moisten a microfiber cloth with a mixture of 70% isopropyl alcohol and 30% water. The cloth should be moist, but not dripping wet.

⚠ **CAUTION:** Do not use any of the following chemicals or any solutions that contain them, including spray-based surface cleaners: bleach, peroxides (including hydrogen peroxide), acetone, ammonia, ethyl alcohol, methylene chloride, or any petroleum-based materials, such as gasoline, paint thinner, benzene, or toluene.

IMPORTANT: To avoid damaging the surface, avoid abrasive cloths, towels, and paper towels.

4. Wipe the exterior of the product gently with the moistened cloth.

IMPORTANT: Keep liquids away from the product. Avoid getting moisture in any openings. If liquid makes its way inside your HP product, it can cause damage to the product. Do not spray liquids directly on the product. Do not use aerosol sprays, solvents, abrasives, or cleaners containing hydrogen peroxide or bleach that might damage the finish.

5. Start with the display (if applicable). Wipe carefully in one direction, and move from the top of the display to the bottom. Finish with any flexible cables, like power cord, keyboard cable, and USB cables.
6. Be sure that surfaces have completely air-dried before turning the device on after cleaning.
7. Discard the gloves after each cleaning. Clean your hands immediately after you remove the gloves.

Cleaning the computer case

Follow all safety precautions before cleaning the computer case.

To clean the computer case, follow these procedures:

- To remove light stains or dirt, use plain water with a clean, lint-free cloth or swab.
- For stronger stains, use a mild dishwashing liquid diluted with water. Rinse well by wiping it with a cloth or swab dampened with clear water.
- For stubborn stains, use isopropyl (rubbing) alcohol. No rinsing is needed because the alcohol evaporates quickly and does not leave a residue.
- After cleaning, always wipe the unit with a clean, lint-free cloth.
- Occasionally clean the air vents on the computer. Lint and other foreign matter can block the vents and limit the airflow.

Cleaning the keyboard

Use this information to properly clean the keyboard. Follow all safety precautions before cleaning the keyboard.

To clean the tops of the keys or the keyboard body, follow the procedures described in Cleaning the computer case on page 12.

When cleaning debris from under the keys, review all rules in General cleaning safety precautions on page 10 before following these procedures.

⚠ **CAUTION:** Use safety glasses equipped with side shields before attempting to clean debris from under the keys.

- You can remove visible debris underneath or between the keys by vacuuming or shaking.
- You can use canned, pressurized air to clean debris from under the keys. Use caution because too much air pressure can dislodge lubricants applied under the wide keys.
- If you remove a key, use a specially designed key puller to prevent damage to the keys. This tool is available through many electronic supply outlets.

IMPORTANT: Never remove a wide leveled key (like the space bar) from the keyboard. If these keys are improperly removed or installed, the keyboard might not function properly.

- You can clean under a key with a swab moistened with isopropyl alcohol and squeezed out. Be careful not to wipe away lubricants necessary for proper key functions. Use tweezers to remove any fibers or dirt in confined areas. Allow the parts to air dry before reassembly.

Cleaning the monitor

Follow all safety precautions before cleaning dirt and debris from your computer. Use this information to properly clean the monitor.

- Wipe the monitor screen with a clean cloth moistened with water or with a towelette designed for cleaning monitors. Do not use sprays or aerosols directly on the screen; the liquid can seep into the housing and damage a component. Never use solvents or flammable liquids on the monitor.
- To clean the monitor body, follow the procedures in Cleaning the computer case on page 12.

Cleaning the mouse

Follow all safety precautions before cleaning your mouse. Use this information to properly clean the mouse.

To clean the mouse body, follow the procedures in Cleaning the computer case on page 12.

Service considerations

Keep these considerations in mind during the disassembly and assembly of the computer.

Tools and software requirements

Servicing the computer requires these tools.

- Torx T-15 screwdriver
- Torx T-30 screwdriver
- Flat-bladed screwdriver (can sometimes be used in place of the Torx screwdriver)
- Phillips P1 screwdriver
- Nonconductive, nonmarking pry tool

- Diagnostics software

Screws

The screws used in the computer are not interchangeable. They could have standard or metric threads and might be of different lengths.

If you use an incorrect screw during the reassembly process, it can damage the unit. HP strongly recommends that you keep all screws that you remove during disassembly with the removed part and then return them to their proper locations.

IMPORTANT: As you remove each subassembly from the computer, place it away from the work area to prevent damage.

Cables and connectors

Use this information to properly handle cables.

Apply only the tension required to seat or unseat the cables during insertion or removal from the connector. Handle cables by the connector whenever possible. In all cases, avoid bending or twisting the cables, and route the cables so that they cannot be caught or snagged by parts being removed or replaced.

IMPORTANT: When servicing this computer, be sure to place cables in their proper location during the reassembly process. Improper cable placement can damage the computer.

Hard drives

Handle hard drives as delicate, precision components, and avoid all physical shock and vibration. This advice applies to failed drives as well as replacement spares.

- If a drive must be mailed, place the drive in a bubble-pack mailer or other suitable protective packaging and label the package “Fragile: Handle With Care.”
- Do not remove hard drives from the shipping package for storage. Keep hard drives in their protective packaging until they are actually mounted in the computer.
- Avoid dropping drives from any height onto any surface.
- If you are inserting or removing a hard drive, turn off the computer. Do not remove a hard drive while the computer is on or in standby mode.
- Before handling a drive, ensure that you are discharged of static electricity. While handling a drive, avoid touching the connector.
- Do not use excessive force when inserting a drive.
- Avoid exposing a hard drive to liquids, temperature extremes, or products that have magnetic fields such as monitors or speakers.

Lithium coin cell battery

The battery that comes with the computer provides power to the real-time clock and has a minimum lifetime of approximately three years.

See the removal and replacement chapter for replacement instructions.

⚠ **WARNING!** This computer contains a lithium battery. There is a risk of fire and chemical burn if the battery is handled improperly. Do not disassemble, crush, puncture, short external contacts, dispose of in water or fire, or expose it to temperatures higher than 140°F (60°C). Do not attempt to recharge the battery.

NOTE: Do not dispose of batteries, battery packs, and accumulators with general household waste. To forward them to recycling centers or proper disposal, use the public collection system or return them to HP, their authorized partners, or their agents.

SATA hard drives

The Self Monitoring Analysis and Recording Technology (SMART) ATA drives for the HP Personal Computers have built-in drive failure prediction that warns the user or network administrator of an impending failure or crash of the hard drive.

The SMART drive tracks fault prediction and failure indication parameters such as reallocated sector count, spin retry count, and calibration retry count. If the drive determines that a failure is imminent, it generates a fault alert.

Table 3-3 SATA hard drive characteristics

Serial ATA hard drive characteristics	
Number of pins/conductors in data cable	7/7
Number of pins in power cable	15
Maximum data cable length	100 cm (39.37 in)
Data interface voltage differential	400 mV–700 mV
Drive voltages	3.3 V, 5 V, 12 V
Jumpers for configuring drive	N/A
Data transfer rate	6.0 Gbps

Always use an HP-approved SATA 6.0 Gbps cable because it is fully backwards compatible with the SATA 1.5 Gbps drives. Current HP desktop products ship with SATA 6.0 Gbps hard drives.

SATA data cables are susceptible to damage if overflexed. Never crease a SATA data cable and never bend it tighter than a 30 mm (1.18 in) radius.

The SATA data cable is a thin, seven-pin cable designed to transmit data for only a single drive.

Cable management

Always follow good cable management practices when working inside the computer.

- Keep cables away from major heat sources like the heat sink.
- Keep cables clear of sliding or moveable parts to prevent them from being cut or crimped when the parts are moved.
- When folding a flat ribbon cable, never fold to a sharp crease. Sharp creases can damage the wires.

- Do not bend any cable sharply. A sharp bend can break the internal wires.
- Never bend a SATA data cable tighter than a 30 mm (1.18 in) radius.
- Never crease a SATA data cable.

4 Removal and replacement procedures

Adherence to these procedures and precautions is essential for proper service. After completing all necessary removal and replacement procedures, run the Diagnostics utility to verify that all components operate properly.

NOTE: Not all features listed in this guide are available on all computers.

NOTE: HP continually improves and changes product parts. For complete and current information about supported parts for your computer, go to https://partsurfer.hp.com/partsurfer/, select your country or region, and then follow the on-screen instructions.

Preparation for disassembly

Use this information to properly prepare to disassemble and reassemble the computer.

See Routine care, drive guidelines, and disassembly preparation on page 7 for initial safety procedures.

1. Turn off the computer. If you are unsure whether the computer is off or in Hibernation, turn the computer on, and then shut it down through the operating system.

   IMPORTANT: Turn off the computer before disconnecting any cables.

   Regardless of the power state, voltage is always present on the system board as long as the system is plugged into an active AC outlet. In some systems, the cooling fan is on even when the computer is in the Standby or Suspend modes. Always disconnect the power cord before servicing a unit.

2. Disconnect the power from the computer by unplugging the power cord from the computer.
3. Disconnect all external devices from the computer

CAUTION: Beware of sharp edges inside the chassis.

NOTE: During disassembly, label each cable as you remove it, and note its position and routing. Keep all screws with the removed components.

Feet

To remove the feet, use these procedures.

Before removing the feet, follow this step:

- Prepare the computer for disassembly (see Preparation for disassembly on page 17).

Remove the feet:

1. Insert a tool under a foot to release it **(1)**.

2. Remove the foot from the computer **(2)**.

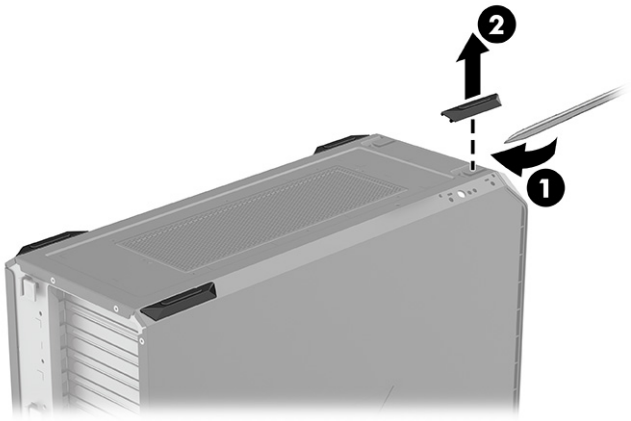

To install the feet, reverse the removal procedure.

Front bezel

To remove the front bezel, use these procedures.

Before removing the front bezel, follow this step:

- Prepare the computer for disassembly (see Preparation for disassembly on page 17).

Remove the front bezel:

1. Position the computer on its right side with the bottom toward you.
2. Release the two tabs **(1)** on the bottom of the front bezel from the computer.
3. Swing the bottom edge of the front bezel **(2)** away from the computer.
4. Remove the front bezel **(3)**.



To install the front bezel, reverse the removal procedure.

Dust filter

To remove the dust filter, use these procedures.

Before removing the dust filter, follow these steps:

1. Prepare the computer for disassembly (Preparation for disassembly on page 17).
2. Remove the front bezel (Front bezel on page 18).

Remove the dust filter:

- Lift the top and bottom dust filters by the blue touchpoints to remove them from the bezel.

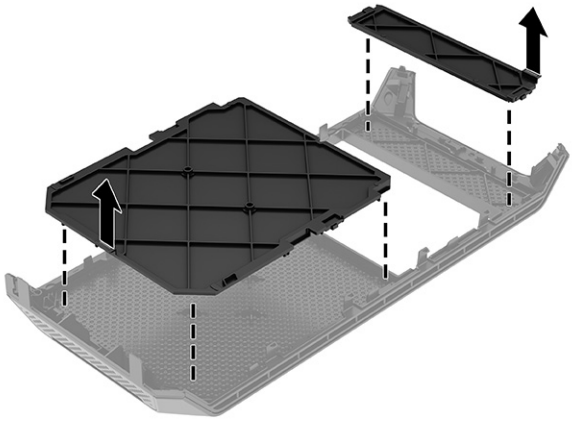

Access panel

To remove the access panel, use these procedures.

NOTE: The computer does not turn on if the access panel is open or removed.

Before removing the access panel, follow this step:

- Prepare the computer for disassembly (see Preparation for disassembly on page 17).

Remove the access panel:

1. Position the computer with the left side toward you.
2. Pull the access panel release latch **(1)**.
3. Use the access panel release latch to swing the top edge of the access panel **(2)** away from the computer.

4. Remove the access panel **(3)** by lifting it straight up.

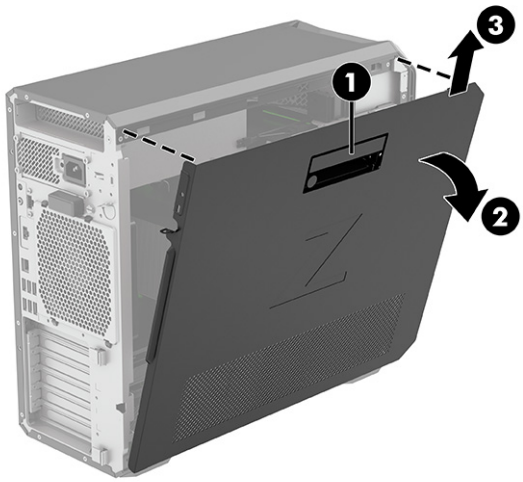

To install the access panel, reverse the removal procedure.

Card guide assembly

To remove the card guide assembly, use these procedures.

Before removing the card guide assembly, follow these steps:

1. Prepare the computer for disassembly (see Preparation for disassembly on page 17).
2. Remove the access panel (see Access panel on page 19).

Remove the card guide assembly:

1. Position the access panel upside down.
2. Press the two tabs on the bottom of the card guide assembly **(1)**.
3. Rotate the bottom of the assembly up, and then lift it off the access panel. **(2)**.

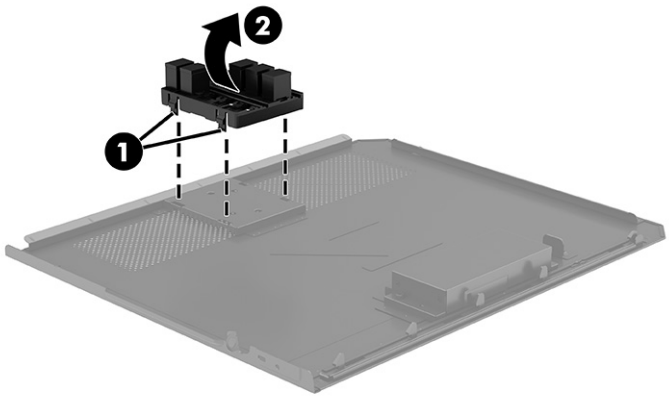

4. If necessary, adjust the card guide assembly by moving any of the five removable guides within the card guide assembly. To remove an individual guide, squeeze the tabs at the bottom **(1)**, and then lift the guide off the assembly **(2)**.

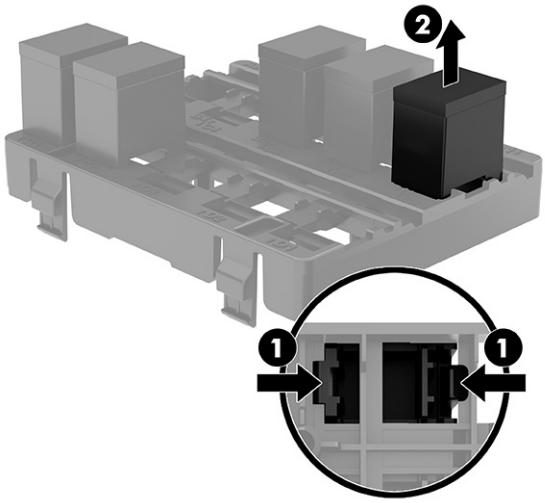

5. If necessary, place removable guides in any of the 10 locations shown in the following illustration.

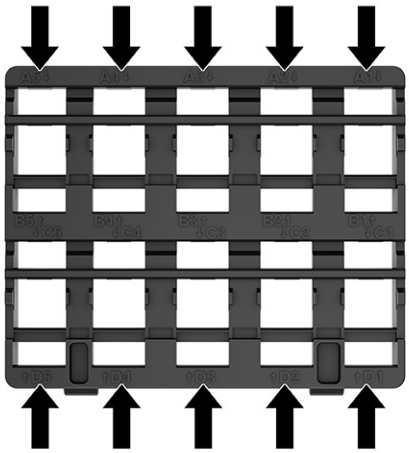

To install the card guide, reverse the removal procedure.

Handle

To remove the handle, use these procedures.

Before removing the handle, follow these steps:

1. Prepare the computer for disassembly (see Preparation for disassembly on page 17).
2. Remove the bezel (see Front bezel on page 18).

Remove the handle:

1. Remove the two Torx screws **(1)** that secure the handle to the computer.

2. Remove the handle **(2)**.

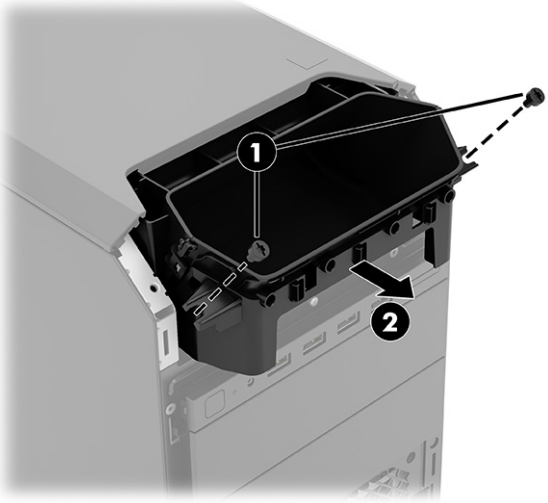

To install the handle, reverse the removal procedure.

Solid-state drive

To remove the solid-state drive, use these procedures.

Before removing the solid-state drive, follow these steps:

1. Prepare the computer for disassembly (see Preparation for disassembly on page 17).
2. Remove the access panel (see Access panel on page 19).

Remove the solid-state drive:

1. Slide the release latch back **(1)**, and then pull the drive out of the socket **(2)**.

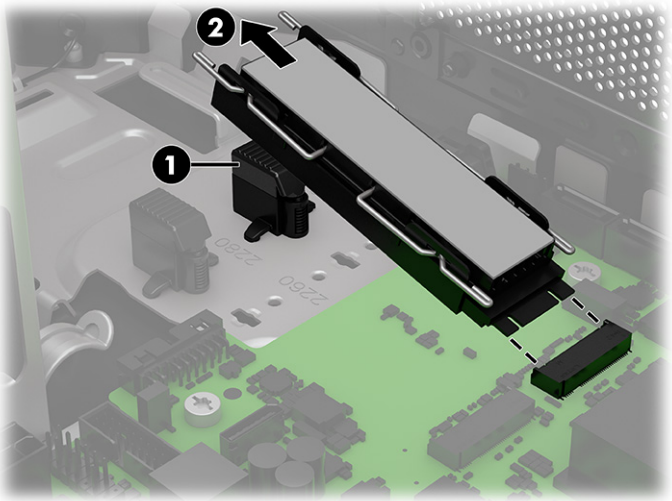

2. You can move the release latch to accommodate either an M.2 2280 or M.2 2260 solid-state drive. To adjust the latch, twist it 90° **(1)**, and then lift it out of the slot **(2)**.

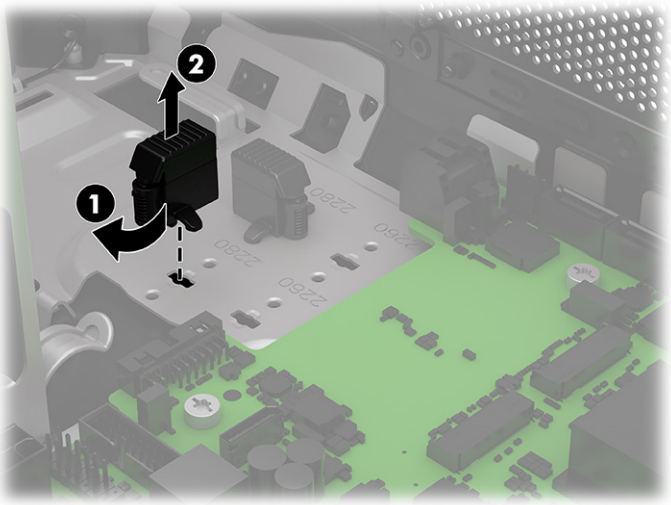

Latch installation locations include:

(1) M2. 2280

(2) M2. 2260

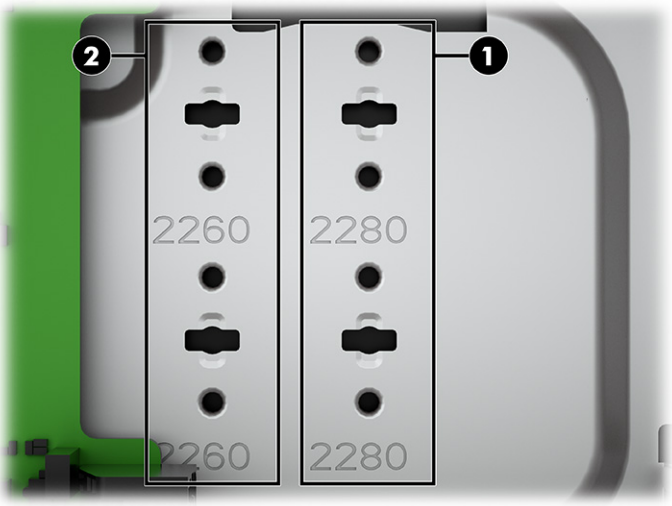

To install the solid-state drive, reverse the removal procedure.

Memory modules (DIMMs)

To remove the memory modules, use this information and procedures.

The memory sockets on the system board are populated with at least one preinstalled memory module. To achieve the maximum memory support, you can populate the system board with up to 512 GB of PC5-4800R, 4800 MHz DDR5, registered, ECC DIMMs configured in a high-performing dual-channel mode.

NOTE: The system might not operate properly if you install unsupported memory modules.

There are eight memory sockets on the system board, with four channels per CPU, two sockets per channel.

For maximum memory performance, evenly distribute total desired memory capacity across all operational channels. Proper individual DIMM capacity selection is essential to maximizing performance.

Platform capabilities

System speed is determined by several factors:

For 1 DIMM per channel configurations, the max memory speed is 4800 MHz.

For 2 DIMM per channel configurations, the max memory speed is 4400 MHz.

Memory will operate at the speed of the slowest rated installed processor or DIMM.

Mixing of DIMMs in a system

Mixing of x4 DRAMs with x8 DRAMs is not supported.

- 16 GB and 32 GB RDIMMs supported by HP are x8 and can be mixed in a system.
- 64 GB RDIMMs supported by HP are x4 and cannot be mixed with other sized DIMMs in a system.

Table 4-1 System speed factors

Module configuration	Description of configuration	Maximum memory speed*
Single DIMM per channel	Configurations with only 1 or 2 DIMM modules installed only in black slots	4400 MHz
Two single-ranked DIMMs in a channel	Configurations with 3 or 4 single ranked DIMMs (8 GB and 16 GB) installed	4000 MHz
Two dual-ranked DIMMs in a channel	Configurations with 3 or 4 dual-ranked DIMMs (32 GB) installed	3600 MHz

* Actual memory speed is dependent on the processor.

Recommendations for upgrading memory

To make sure that the system can run at maximum speed:

- Use the same capacity memory that is already installed in the computer.
- Buy modules in pairs.

Memory features

- Single-bit errors are automatically corrected.
- Detected multi-bit errors cause the system to immediately reboot and halt with an F1 prompt error message.

Loading rules

- Load the memory modules in order of size, starting with the largest module and finishing with the smallest module.

- Each channel includes two DIMM sockets; black and white connector pairs represent a channel. The DIMMs should be loaded first in the black sockets and then in the white sockets. The DIMMs should be loaded starting with the DIMM furthest from the CPU, with the first DIMM loaded in the right most socket and alternating sides of the CPU.

  See the following illustration for loading order.

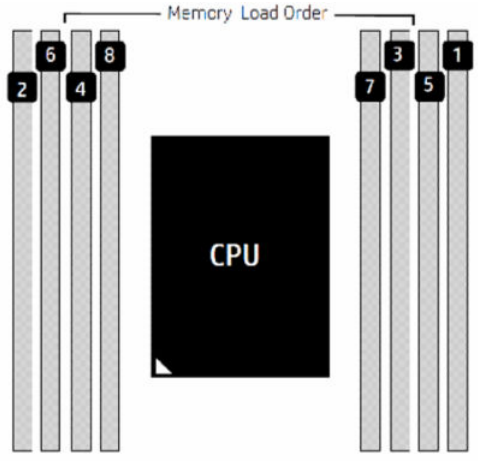

IMPORTANT: You must disconnect the power cord and wait approximately 30 seconds for the power to drain before adding or removing memory modules. Regardless of the power state, voltage is always supplied to the memory modules as long as the computer is plugged into an active AC outlet. Adding or removing memory modules while voltage is present can cause irreparable damage to the memory modules or system board.

The memory module sockets have gold-plated metal contacts. When upgrading the memory, it is important to use memory modules with gold-plated metal contacts to prevent corrosion, oxidation, or both resulting from having incompatible metals in contact with each other.

Static electricity can damage the electronic components of the computer or optional cards. Before beginning these procedures, be sure that you are discharged of static electricity by briefly touching a grounded metal object. For more information, see Electrostatic discharge information on page 7.

When handling a memory module, be careful not to touch any of the contacts. Doing so can damage the module.

Before replacing the memory modules, follow these steps:

1. Prepare the computer for disassembly (see Preparation for disassembly on page 17).
2. Remove the access panel (see Access panel on page 19).
3. Remove the memory fan (see Memory fan on page 28).

Replace a memory module:

1. To remove a memory module, open both latches of the memory module socket **(1)**, and then remove the memory module from the socket **(2)**.

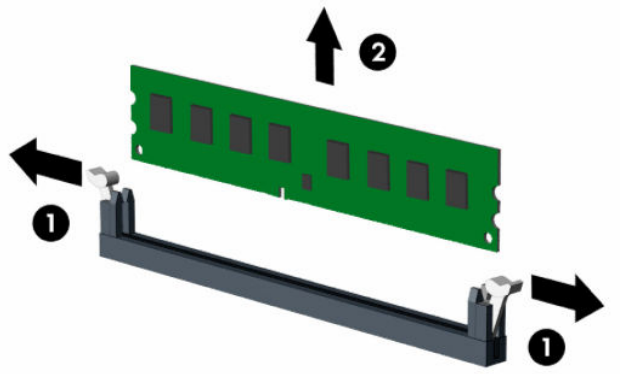

2. To install a memory module, open both latches of the memory module socket **(1)**, and insert the memory module into the socket **(2)**. Press the module down into the socket so that the module is fully inserted and properly seated. Be sure that the latches are in the closed position **(3)**.

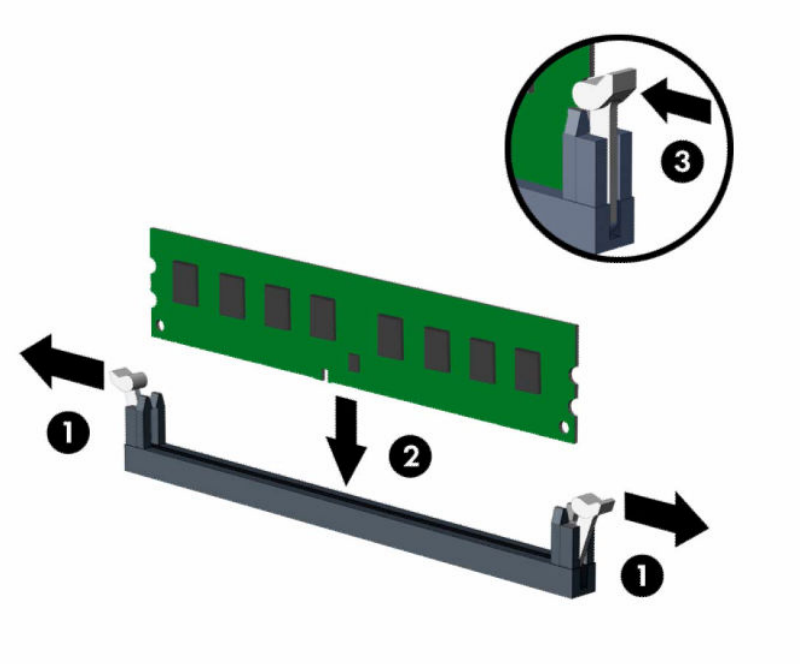

NOTE: A memory module can be installed in only one way. Match the notch on the module with the tab on the memory socket.

The computer automatically recognizes the additional memory when you turn on the computer.

PCIe retainer fan

To remove the PCIe retainer fan, use these procedures.

Before removing the PCIe retainer fan, follow these steps:

1. Prepare the computer for disassembly (see Preparation for disassembly on page 17).

2. Remove the access panel (see Access panel on page 19).

Remove the PCIe retainer fan:

1. Lift the release latch **(1)**.
2. Rotate the assembly upward **(2)**.
3. Pull the assembly out of the computer **(3)**.

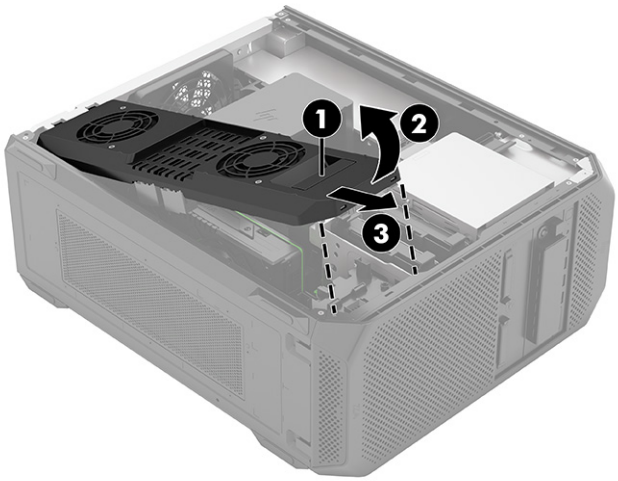

To install the PCIe retainer fan, push in and rotate the assembly until the connector on the PCIe retainer mates with the receptacle on the front card guide.

Front card guide and fan

To remove the front card guide and fan, use these procedures.

Before removing the front card guide and fan, follow these steps:

1. Prepare the computer for disassembly (see Preparation for disassembly on page 17).
2. Remove the access panel (see Access panel on page 19).
3. Remove the PCIe retainer fan (see PCIe retainer fan on page 26).

Remove the front card guide and fan:

1. Disconnect the cables from the system board **(1)**.
2. Press two tabs to release the assembly **(2)**.

3. Rotate the fan forward and lift it out of the computer **(3)**.

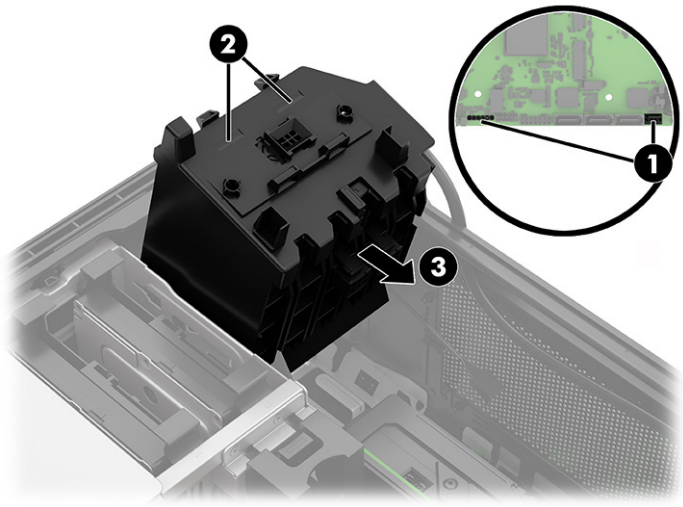

To install the front card guide and fan, reverse the removal procedure.

Memory fan

To remove the memory fan, use these procedures.

Before removing the memory fan, follow these steps:

1. Prepare the computer for disassembly (see Preparation for disassembly on page 17).
2. Remove the access panel (see Access panel on page 19).

Remove the memory fan:

1. Press the two tabs to release the memory fan assembly **(1)**.
2. Lift the assembly straight up to remove it **(2)**.

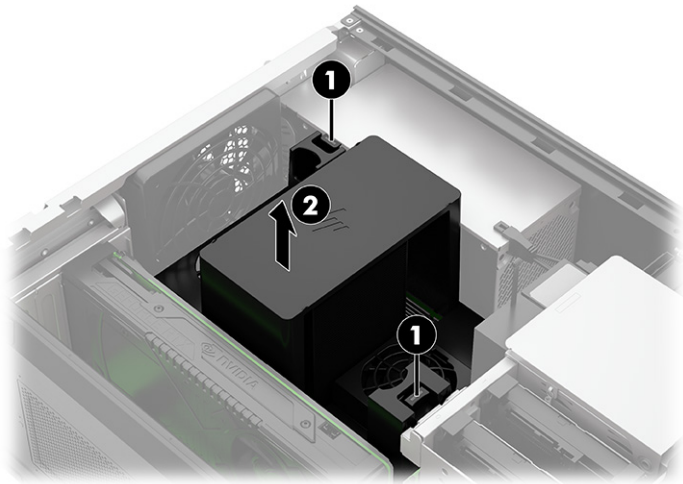

To install the memory fan, reverse the removal procedure.

IMPORTANT: To avoid damaging the components, when installing a memory fan, be sure that there is sufficient space for the memory fan and that there are no obstructions between the connector and the receptacle on the system board.

Expansion card

The computer has one PCI Express ×16 Gen5 expansion socket, two PCI Express ×16 Gen4 expansion sockets, and two PCI Express ×4 Gen4 expansion sockets.

NOTE: You can install a PCI Express ×1, ×8, or ×16 expansion card in the PCI Express ×16 socket.

For dual graphics card configurations, the first (primary) card must be installed in the PCI Express ×16 socket.

Before replacing the expansion modules, follow these steps:

1. Prepare the computer for disassembly (see Preparation for disassembly on page 17).
2. Remove the access panel (see Access panel on page 19).

To remove an expansion card:

1. Press down on the release tabs at the top of the expansion card bracket to release and rotate the bracket off the top of the expansion cards.

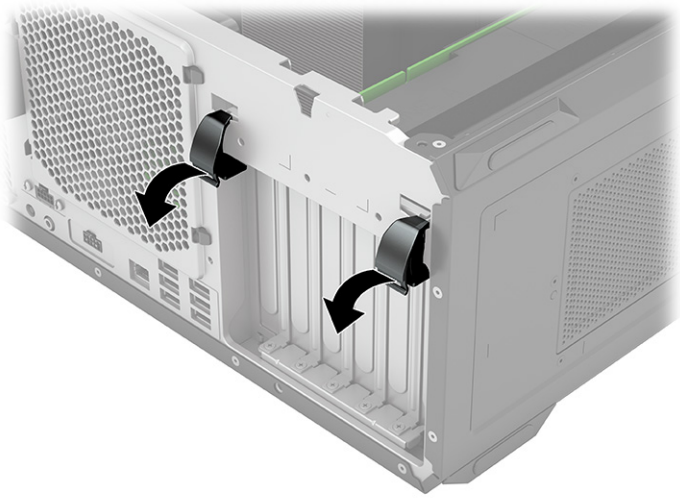

2. Set the front card guide to the unlock position and remove the PCIe retainer or any other devices that interfere with the installation of the PCIe device.
3. If you are removing a PCI Express ×16 card, pull the release lever on the system board socket **(1)**, hold the card at each end, and then carefully rock it back and forth until the connectors pull free from the socket. Lift the card straight up and then away from the inside of the chassis **(2)** to remove it. Be sure not to scrape the card against other components.

NOTE: Before removing an installed expansion card, disconnect any cables that are attached to the expansion card.

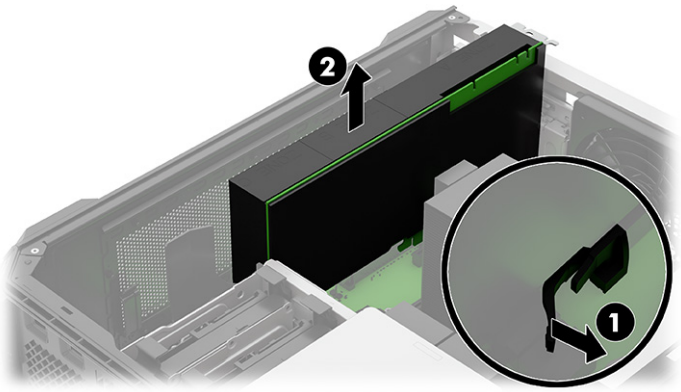

4. If you are installing an expansion card that is in a location with a slot cover installed, remove the cover by pulling it straight up and away from the inside of the chassis.

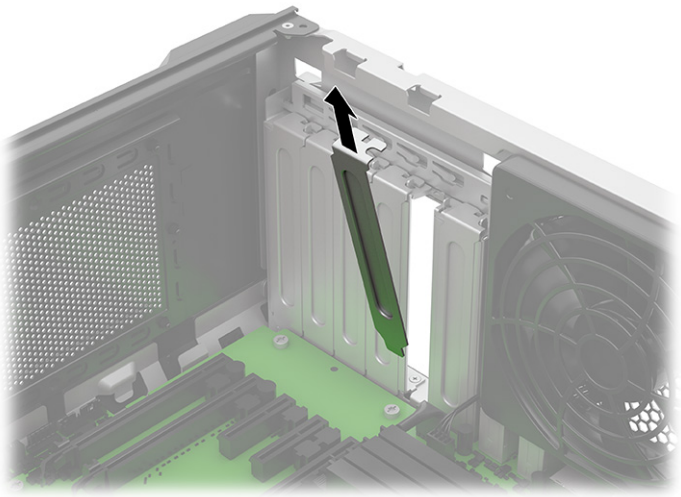

5. If you are installing an expansion card that is wider than a single slot cover, remove the PCI rib by removing the Phillips screw **(1)**, and then lifting the rib out of the computer **(2)**.

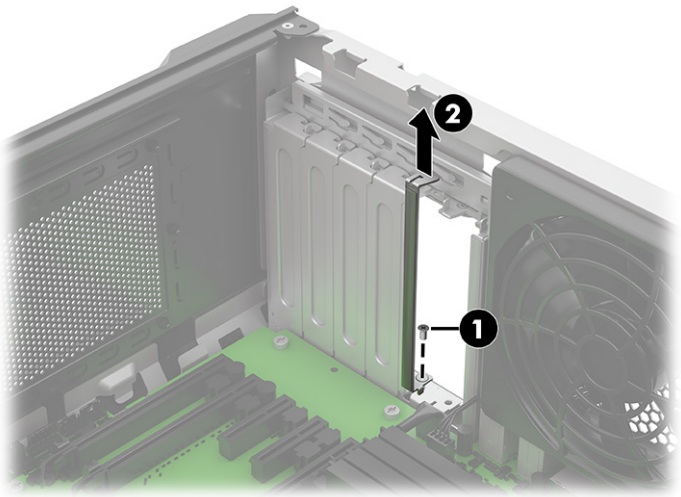

6. To remove an expansion slot release tab, use a tool to release the tab from the computer **(1)**, and then remove the tab **(2)**.

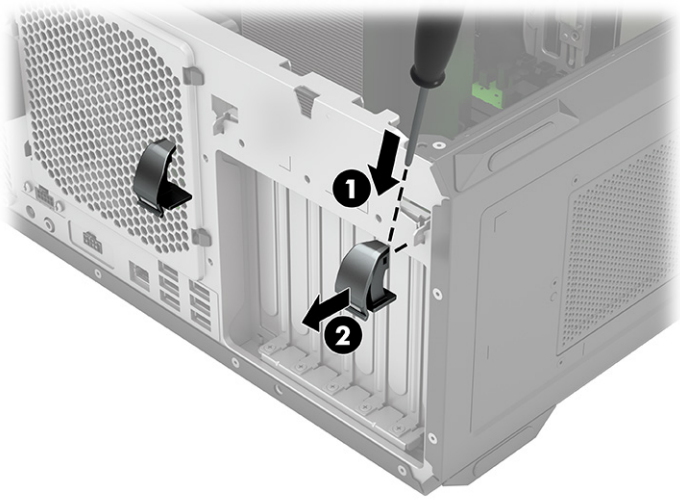

7. Store a removed card in antistatic packaging.
8. If you are not installing a new expansion card, install an expansion slot cover to close the open slot.

> ⚠ CAUTION: After removing an expansion card, you must replace it with a new card or expansion slot cover for proper cooling of internal components during operation.

9. Reverse the removal procedures to install a new expansion card. Be sure to rotate the slot cover retention latch down into place after installation.
10. After installing an expansion card, connect external cables to the installed card and internal cables to the system board, if needed.
11. Reassemble and reconfigure the computer, if necessary.

I/O assembly

To remove the I/O assembly, use these procedures.

Before removing the I/O assembly, follow these steps:

1. Prepare the computer for disassembly (see Preparation for disassembly on page 17).
2. Remove the access panel (see Access panel on page 19).

Remove the I/O assembly:

1. Disconnect the I/O front audio cable **(1)** from the system board.
2. Disconnect the I/O assembly UI cable **(2)** from the I/O assembly.
3. Disconnect the I/O assembly USB cable **(3)** from the I/O assembly.
4. Disconnect the I/O assembly memory card reader cable **(4)** from the I/O assembly.

5. Disconnect the I/O assembly FIOUI-Premium (OClink) cable **(5)** from the I/O assembly.

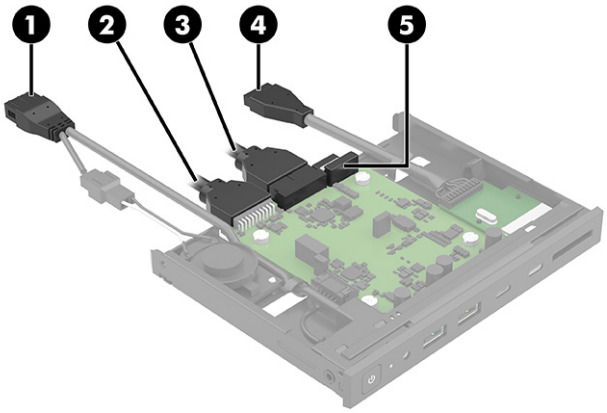

6. Release the I/O assembly by lifting up on the drive release bar **(1)**.
7. Remove the I/O assembly **(2)**.

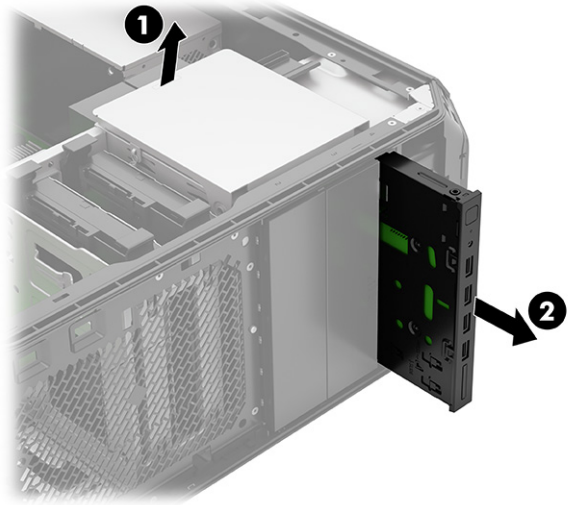

To install the I/O assembly, reverse the removal procedure.

Optical drive carrier

To remove the optical drive carrier, use these procedures.

Before removing the optical drive carrier, follow these steps:

1. Prepare the computer for disassembly (see Preparation for disassembly on page 17).
2. Remove the access panel (see Access panel on page 19).

Remove the optical drive carrier:

1. Release the drive insert by lifting up on the drive release bar **(1)**.

2. Remove the drive insert **(2)**.

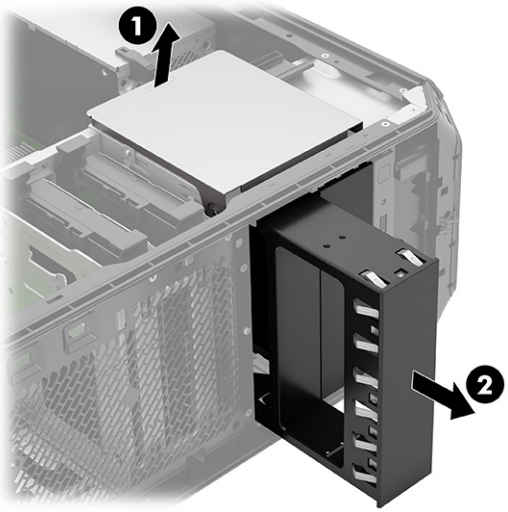

To install the optical drive carrier, reverse the removal procedure.

Interlock assembly

To remove the interlock assembly, use these procedures.

Before removing the interlock assembly, follow these steps:

1. Prepare the computer for disassembly (see Preparation for disassembly on page 17).
2. Remove the access panel (see Access panel on page 19).

Remove the interlock assembly:

1. Disconnect the cable from the system board **(1)**.
2. Lift the top of the interlock housing up and toward the rear of the computer to remove it **(2)**.

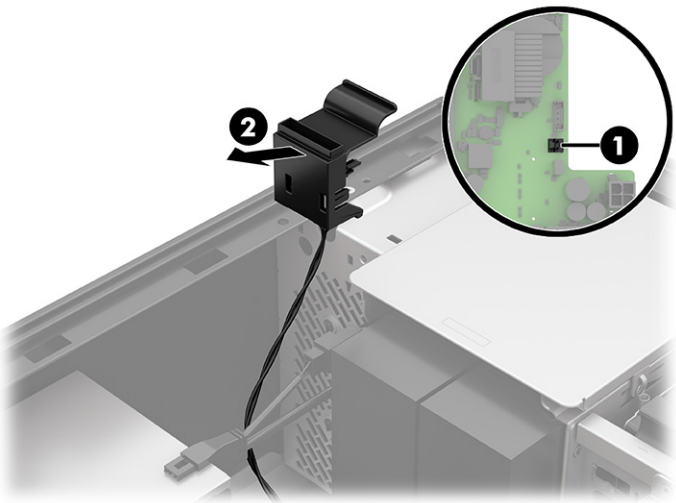

3. Remove the interlock switch from the housing by pulling the two tabs **(1)**, and then pulling the switch out of the housing **(2)**.



To install the interlock assembly, reverse the removal procedure.

Battery

To remove the battery, use these procedures. The battery that comes with the computer provides power to the real-time clock. When replacing the battery, use a battery equivalent to the battery originally installed in the computer. The computer comes with a 3 V lithium coin cell battery.

⚠ **WARNING!** The computer contains an internal lithium manganese dioxide battery. There is a risk of fire and burns if the battery is not handled properly. To reduce the risk of personal injury:

- Do not attempt to recharge the battery.
- Do not expose to temperatures higher than 60°C (149°F).
- Do not disassemble, crush, puncture, short external contacts, or dispose of in fire or water.
- Replace the battery only with the HP spare part that is designated for this product.

IMPORTANT: Before replacing the battery, back up the computer CMOS settings. When the battery is removed or replaced, the CMOS settings are cleared.

Static electricity can damage the electronic components of the computer or optional equipment. Before beginning these procedures, be sure that you are discharged of static electricity by briefly touching a grounded metal object.

NOTE: You can extend the lifetime of the lithium battery by plugging the computer into an AC outlet. The lithium battery is used only when the computer is not connected to AC power.

HP encourages customers to recycle used electronic hardware, HP original print cartridges, and rechargeable batteries. For more information about recycling programs, go to http://www.hp.com/recycle.

Before removing the battery, follow these steps:

1. Prepare the computer for disassembly (see Preparation for disassembly on page 17).
2. Remove the access panel (see Access panel on page 19).

Remove the battery:

1. To release the battery from the holder, insert a nonmetallic tool into the slot of the battery holder near the retention clips **(1)**, lift the tool to release the battery **(2)**, and then remove the battery from the holder **(3)**.

NOTE: HP recommends using a nonmetallic tool that is approximately 2.5 cm (1 in) in length.

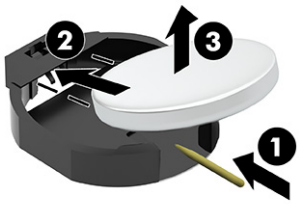

2. With the positive side of the replacement battery facing up, slide the battery under the lip on the battery holder **(1)**, and the push the battery downward into place in the holder **(2)**.

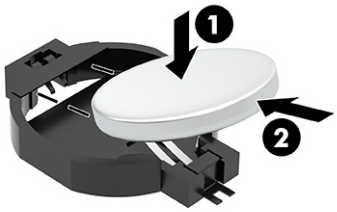

Hard drive

To remove the hard drive, use these procedures.

IMPORTANT: To prevent loss of work and damage to the computer or drive:

- If you are inserting or removing a drive, shut down the operating system properly, turn off the computer, and unplug the power cord. Do not remove a drive while the computer is on or in standby mode.
- Before handling a drive, be sure that you are discharged of static electricity. While handling a drive, avoid touching the connector.
- Handle a drive carefully; do not drop it.
- Do not use excessive force when inserting a drive.
- Avoid exposing a hard drive to liquids, temperature extremes, or products that have magnetic fields such as monitors or speakers.
- If a drive must be mailed, place the drive in a bubble-pack mailer or other protective packaging and label the package “Fragile: Handle With Care.”

Before removing the hard drive, follow these steps:

1. Prepare the computer for disassembly (see Preparation for disassembly on page 17).
2. Remove the access panel (see Access panel on page 19).

Remove the hard drive:

1. Disconnect the power cable and data cable **(1)** from the hard drive.
2. Squeeze and hold the drive holder release tabs **(2)**.
3. Lift the hard drive assembly out of the drive cage **(3)**.

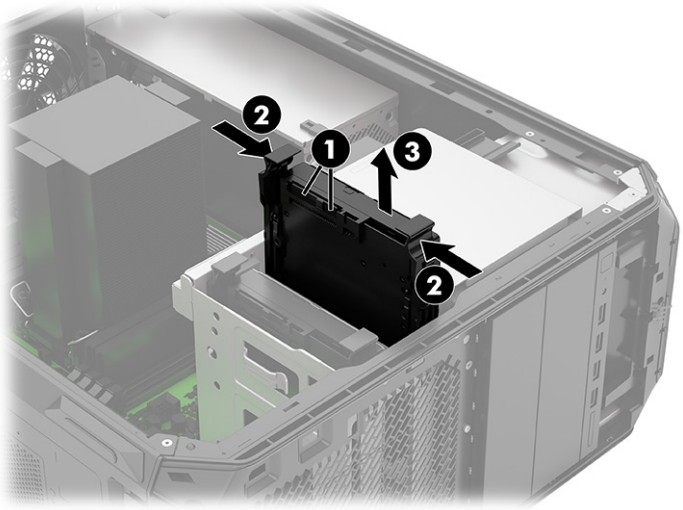

4. Separate the drive holder retention arms **(1)** from the hard drive, making sure the retention pins **(2)** fully release from the drive.
5. Remove the hard drive **(3)** from the drive holder.

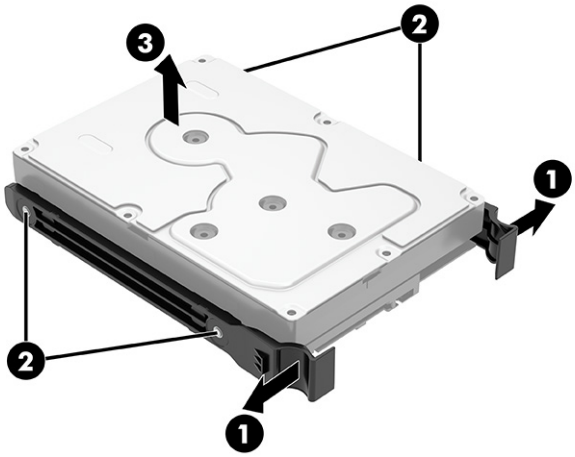

To replace the hard drive, reverse the removal procedures.

Rear fan

To remove the rear fan, use these procedures.

Before removing the rear fan, follow these steps:

1. Prepare the computer for disassembly (see Preparation for disassembly on page 17).

2. Remove the access panel (see Access panel on page 19).

Remove the rear fan:

1. Disconnect the fan cable **(1)** from the system board.
2. From the rear of the computer, press the two tabs on the left side of the fan **(2)**.
3. Pull the left side of the fan into the computer **(3)**, and then lift the fan out of the computer **(4)**.

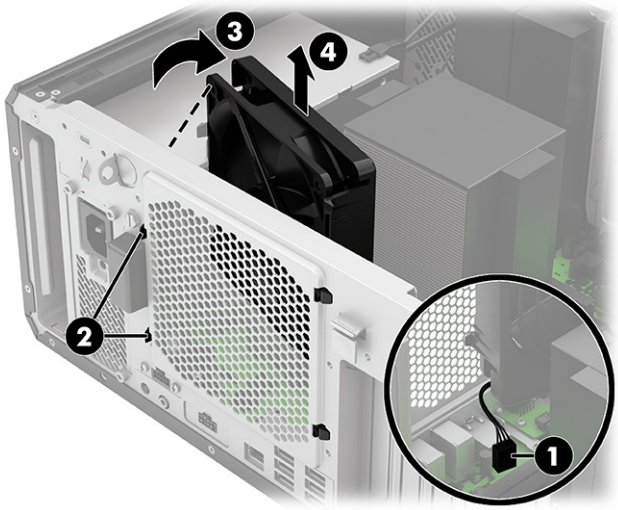

To install the rear fan, reverse the removal procedure.

Heat sink

To remove the heat sink, use these procedures.

NOTE: The heat sink spare part kit includes replacement thermal material.

Before removing the heat sink, follow these steps:

NOTE: When replacing the heat sink, be sure that the processor (see Processor on page 38) is removed from the defective heat sink and installed on the replacement heat sink.

1. Prepare the computer for disassembly (see Preparation for disassembly on page 17).
2. Remove the access panel (see Access panel on page 19).

Remove the heat sink:

1. Disconnect the heat sink fan cable from the system board **(1)**.
2. In the sequence indicated on the label on the heat sink, loosen the four slotted Torx30 captive screws **(2)** that secure the heat sink to the computer.

   IMPORTANT: Remove heat sink retaining screws in diagonally opposite pairs (as in an X) to even the downward forces on the processor. The pins on the socket are fragile, and damage to them might require replacing the system board.

3. Pull the levers located on the outside of each screw toward each other **(3)**.

4. NOTE: The processor is attached to the bottom of the heat sink. When the heat sink is removed, it is recommended that the heat sink be left resting upside down, with the processor resting on top of the heat sink. Failure to follow this caution can result in damage to the processor.

   Remove the heat sink from the computer **(4)**.

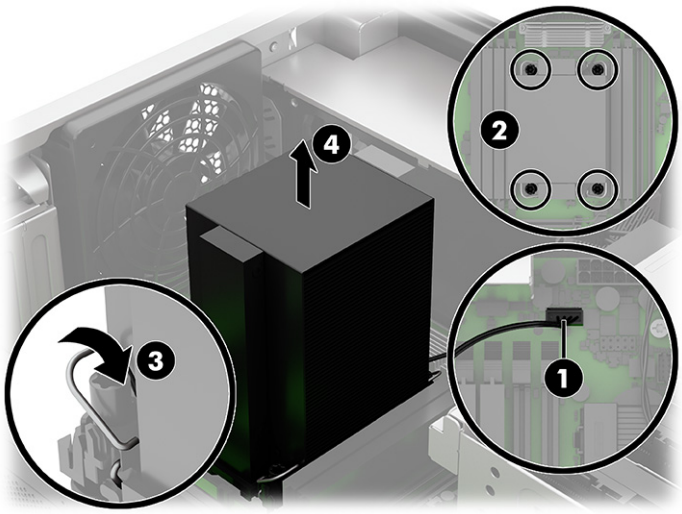

To replace the heat sink, reverse the removal procedures.

Processor

To remove the processor, use these procedures.

Before removing the processor, follow these steps:

1. Prepare the computer for disassembly (see Preparation for disassembly on page 17).
2. Remove the access panel (see Access panel on page 19).
3. Remove the heat sink (see Heat sink on page 37).

Remove the processor:

1. Position the heat sink upside down.
2. Release the four clips **(1)** that secure the processor holder to the heat sink.
3. Remove the processor holder **(2)** from the heat sink by lifting it straight up.
4. Carefully release the processor holder clips **(3)**.

5. Remove the processor **(4)** from the processor holder by lifting it straight up.

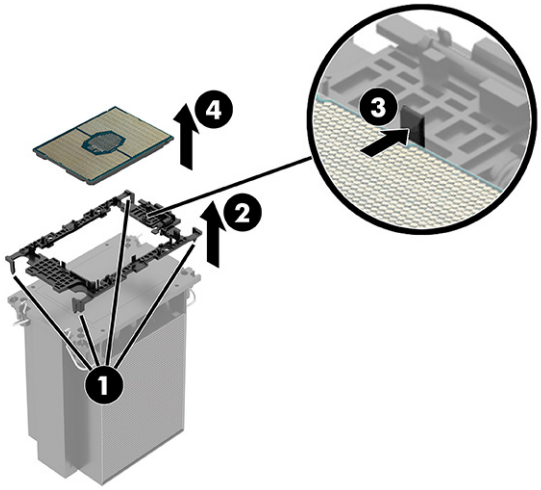

IMPORTANT: Do not handle the pins in the processor socket. These pins are fragile, and handling them could cause irreparable damage. If pins are damaged, you might have to replace the system board.

The thermal material must be thoroughly cleaned from the surfaces of the processor and the heat sink and reinstalled each time the processor is removed. Replacement thermal material is included with the processor and heat sink spare part kits.

When installing the processor into the processor holder, make sure the corner of the processor with the triangle icon **(1)** is aligned with the corner of the processor holder with the triangle icon **(2)**, and the notches **(3)** in the processor are aligned with the ribs **(4)** on the processor holder clips. When installing the processor and processor holder onto the heat sink, make sure the corner of the processor holder with the triangle icon **(2)** is aligned with the corner of the heat sink with the triangle icon **(5)**. Failure to follow this caution can result in damage to the processor and system board and system failure.

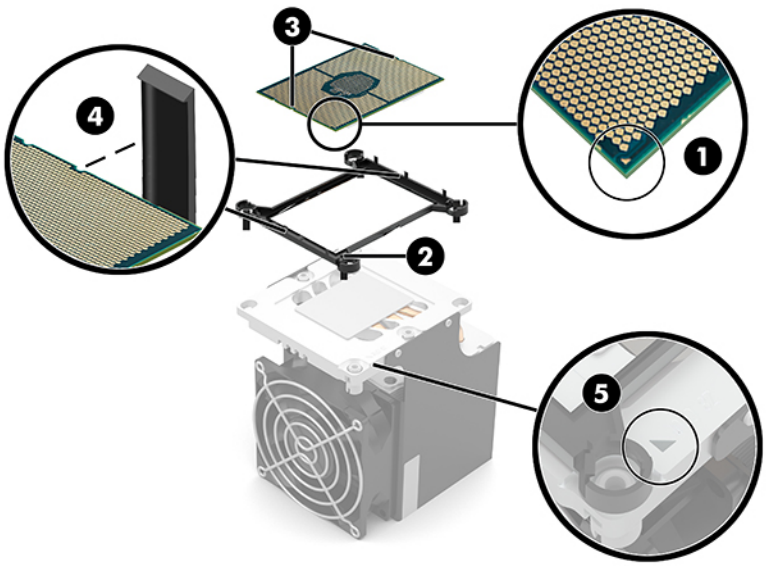

Power supply

To remove the power supply, use these procedures.

Before removing the power supply, follow these steps:

1. Prepare the computer for disassembly (see Preparation for disassembly on page 17).
2. Remove the access panel (see Access panel on page 19).
3. Remove the PCI retainer fan (PCIe retainer fan on page 26).

Remove the power supply:

1. Pull out the three metal clips that secure power supply cables **(1)**.
2. Disconnect the three cables from the system board connectors labeled PWR, MAINPWR, and PWRCMD **(2)**.

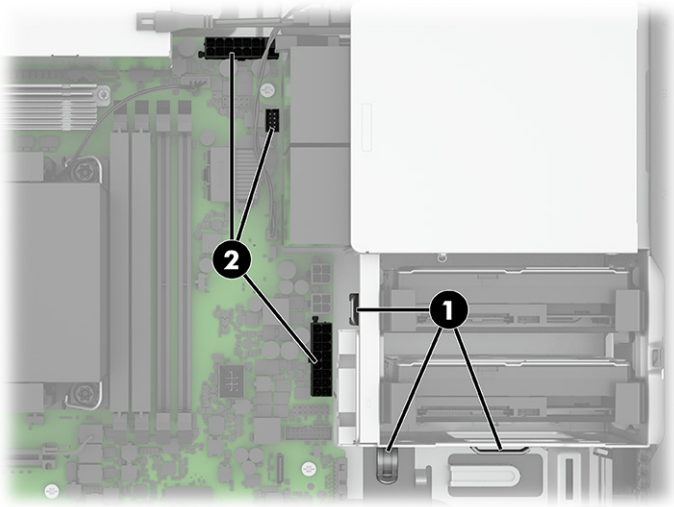

3. Disconnect any power cables connected to PCIe devices.
4. Remove the four Torx screws **(1)** that secure the power supply to the back of the computer.
5. Press the release button at the front of the power supply **(2)**.

6. Lift the power supply out of the computer **(3)**.

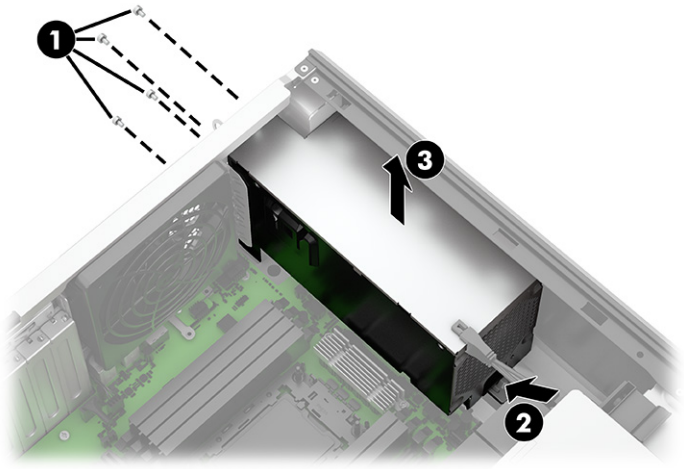

To install the power supply, reverse the removal procedures.

System board

To remove the system board, use these procedures.

NOTE: All system board spare part kits include replacement thermal material.

Before removing the system board, follow these steps:

1. Prepare the computer for disassembly (see Preparation for disassembly on page 17).
2. Remove the access panel (see Access panel on page 19).
3. Remove the memory fan (Memory fan on page 28).
4. Remove the rear fan (see Rear fan on page 36).
5. When replacing the system board, be sure that the heat sink (see Heat sink on page 37) is removed from the defective system board and installed on the replacement system board.

Remove the system board:

1. Disconnect the following cables from the system board:

NOTE: Drive cables might vary based on system configuration.

(1) Front audio cable

(2) Rear system fan cable

(3) Power supply cable

(4) Power supply cable

(5) Hood sensor cable

(6) Power supply cable

(7) Drive power cable

(8) Power cable

(9) USB cable

(10) FUI cable

(11) Drive SATA cables

(12) Drive SATA cable

(13) Drive SATA cable

(14) Hard drive cable

NOTE: If installed, disconnect the external and external drive connectors. Drive configuration varies by model.

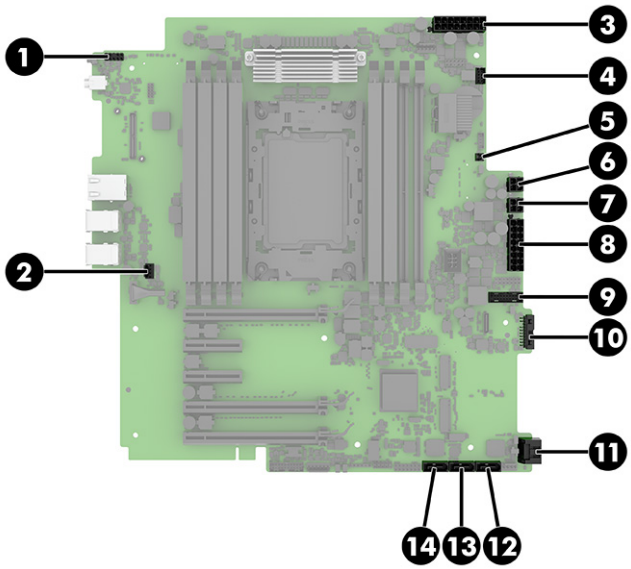

2. Remove the eight Torx15 screws **(1)** that secure the system board to the computer.
3. Lift the front of the system board up **(2)**, and then pull the system board up and out of the computer **(3)**.

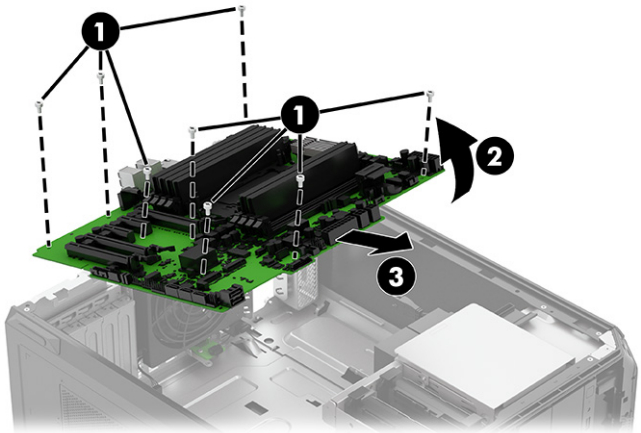

To install the system board, reverse the removal procedures.

5 Troubleshooting without diagnostics

Use these sections to identify and correct minor problems.

⚠ **CAUTION:** Misuse of the computer or failure to establish a safe and comfortable work environment can result in discomfort or serious injury. See the *Safety & Comfort Guide* at http://www.hp.com/ergo for more information about choosing a workspace and creating a safe and comfortable work environment. For more information, see the *Safety & Regulatory Information* guide.

Before you call for technical support

If you are having problems with the computer, try these solutions to isolate the exact problem before calling for technical support.

- Run the HP diagnostic tool.
- Run the hard drive self-test in Computer Setup.
- Check the power light on the front of the computer to see if it is blinking red. The blinking lights are error codes that will help you diagnose the problem.
- If you are working on a network, plug another computer with a different cable into the network connection. There might be a problem with the network plug or cable.
- If you recently added new hardware, remove the hardware and see if the computer functions properly.
- If you recently installed new software, uninstall the software and see if the computer functions properly.
- Boot the computer to the Safe Mode to see if it will boot without all of the drivers loaded. When booting the operating system, use “Last Known Configuration.”
- See the comprehensive online technical support at http://www.hp.com/support.

Access HP Business Solutions at https://www.hp.com/us-en/solutions/business-solutions.html for the latest online support information, software and drivers, proactive notification, and worldwide community of peers and HP experts.

If it becomes necessary to call for technical assistance, be prepared to do the following tasks to ensure that your service call is handled properly:

- Be in front of your computer when you call.
- Before you call, write down the computer serial number and product ID number.
- Spend time troubleshooting the problem with the service technician.
- Restore the system from the Recovery Disc Set that you created or restore the system to its original factory condition in System Software Requirement Disks (SSRD).

IMPORTANT: Restoring the system will erase all data on the hard drive. Be sure to back up all data files before running the restore process.

NOTE: For sales information and warranty upgrades (Care Packs), call your local authorized service provider or dealer.

Helpful hints

If you encounter problems with the computer or software, see this list of general suggestions before taking further action.

- Check that the computer is plugged into a working electrical outlet.
- Check that the computer is turned on and the white power light is on.
- Be sure the left cover is installed. The computer does not turn on if the left cover is open or removed.
- Check the power light on the front of the computer to see if it is blinking red. The blinking lights are error codes that help you diagnose the problem.
- Press and hold any key if the system beeps. Then the keyboard should be operating correctly.
- Check all cable connections for loose connections or incorrect connections.
- Wake the computer by pressing any key on the keyboard or pressing the power button. If the system remains in suspend mode, shut down the computer by pressing and holding the power button for at least four seconds, and then press the power button again to restart the computer. If the system will not shut down, unplug the power cord, wait a few seconds, and then plug it in again. The computer will restart if it is set to turn on automatically as soon as power is restored in Computer Setup. If it does not restart, press the power button to start the computer.
- Be sure that all the needed device drivers have been installed. For example, if you are using a printer, you need a driver for that model printer.
- Remove all bootable media (such as a USB device) from the system before turning it on.
- If you have installed an operating system other than the factory-installed operating system, check to be sure that it is supported on the system.

NOTICE: When the computer is plugged into an AC power source, voltage is always being applied to the system board. You must disconnect the power cord from the power source before opening the computer to prevent system board or component damage.

Solving general problems

You might be able to easily resolve the general problems described in this section. If a problem persists and you cannot resolve it yourself or if you feel uncomfortable about performing the operation, contact an authorized dealer or reseller.

⚠ CAUTION: When the computer is plugged into an AC power source, voltage is always being applied to the system board. To reduce the risk of personal injury from electrical shock, hot surfaces, or both, be sure to disconnect the power cord from the AC outlet and allow the internal system components to cool before touching.

Cannot access the Computer Setup (F10) Utility when booting the computer

Use this information to troubleshoot the computer.

Cause	Solution
The Computer Setup (F10) Utility is set to Fast Boot, causing the F10 access screen to display too briefly when booting the computer.	Before turning on the computer, press and hold f10. Turn on the computer and continue to hold F10 until the Computer Setup (F10) Utility is displayed. - or – Follow the Windows® instructions for rebooting the computer into the Computer Setup (F10) Utility.

Computer appears locked up and will not turn off when the power button is pressed

Use this information to troubleshoot the computer.

Cause	Solution
Software control of the power switch is not functional.	1. Press and hold the power button for at least 4 s until the computer turns off. 2. Disconnect the power cord from the electrical outlet.

Computer will not respond to keyboard or mouse

Use this information to troubleshoot the computer.

Cause	Solution
Computer is in Sleep state.	To resume from Sleep state, press the power button. IMPORTANT: When attempting to resume from Sleep state, do not hold down the power button for more than 4 s. Otherwise, the computer shuts down and you lose any unsaved data.
System has locked up.	Restart computer.
USB cables may not be seated properly.	Disconnect, and then reconnect USB cables to keyboard and mouse.

Computer date and time display is incorrect

Use this information to troubleshoot the computer.

Cause	Solution
RTC (real-time clock) battery may need to be replaced.	Reset the date and time under **Control Panel**. (Computer Setup can also be used to update the RTC date and time.) If the problem persists, replace the RTC battery. See the Removal and Replacement section for instructions about installing a new battery, or contact an authorized dealer or reseller for RTC battery replacement. To access Control Panel in Windows, type `control panel` in the taskbar search box, and then select Control Panel.

There is no sound or sound volume is too low

Use this information to troubleshoot the computer.

Cause	Solution
System volume might be set low or muted.	1. Check the front panel to see if an amber light indicates the system has been muted. Tap the touch-sensitive button to toggle the mute on and off. 2. Check the Computer Setup settings to be sure that the internal system speaker is not muted. This setting does not affect the external speakers. 3. Be sure that the external speakers are properly connected and powered on and that the speakers' volume control is set correctly. 4. Use the system volume control available in the operating system to be sure that the speakers are not muted or to increase the volume.

Cannot remove computer cover or access panel

Use this information to troubleshoot the computer.

Cause	Solution
Smart Cover Lock, featured on some computers, is locked.	Unlock the Smart Cover Lock using Computer Setup. In case of forgotten password, power loss, or computer malfunction, you must manually disable the Smart Cover lock. A key to unlock the Smart Cover Lock is not available from HP. Keys are typically available from a hardware store.

Poor performance

Use this information to troubleshoot the computer.

Cause	Solution
Processor is too hot.	1. Be sure that airflow to the computer is not blocked. Leave a 10.2 cm (4 inch) clearance on all vented sides of the computer to permit the required airflow. 2. Be sure that fans are connected and working properly (some fans only operate when needed). 3. Be sure that the processor heat sink is installed properly.
Hard drive is full.	Transfer data from the hard drive to create more space on the hard drive.
Low on memory.	Add more memory.
Hard drive fragmented.	Defragment hard drive.
Program previously accessed did not release reserved memory back to the system.	Restart the computer.
Virus resident on the hard drive.	Run virus protection program.
Too many applications running.	1. Close unnecessary applications to free memory. 2. Add more memory. 3. Some applications run in the background and can be closed by right-clicking their corresponding icons in the task tray.

Some software applications, especially games, are stressful on the graphics subsystem.	1. Lower the display resolution for the current application or consult the documentation that came with the application for suggestions on how to improve performance by adjusting parameters in the application. 2. Add more memory. 3. Upgrade the graphics solution.
Cause unknown.	Restart the computer.

System does not turn on and the lights on the front of the computer are not blinking

Use this information to troubleshoot the computer.

Cause	Solution
System unable to power on.	Press and hold the power button for fewer than 4 s. If the hard drive light turns white: 1. If the computer has a voltage selector, check that the voltage selector (located on the rear of the power supply) is set to the appropriate voltage. The proper voltage setting depends on your region. 2. Remove the expansion cards one at a time until the 5V_aux light on the system board turns on. 3. Replace the system board. OR Press and hold the power button for less than 4 s. If the hard drive light does not turn white: 1. Check whether the unit is plugged into a working AC outlet. 2. Open the access panel and check that the power button cable is properly connected to the system board. 3. Check that the power supply cables are properly connected to the system board. 4. Check to see if the 5V_aux light on the system board is turned on. If it is turned on, replace the power button assembly. 5. If the 5V_aux light on the system board is off, replace the power supply. 6. Replace the system board.

Solving power problems

These tables provide common causes and solutions for power problems.

Computer will not turn on

Use this information to troubleshoot the computer.

Cause	Solution
The left cover is open or not installed.	Be sure the left cover is installed. The computer will not turn on if the left cover is open or removed.

Three red blinks then seven white blinks

Computer will not turn on, power light blinks red three times and seven white blinks.

Cause	Solution
Computer cover not properly installed.	▪ Be sure that the computer cover is installed firmly in place.

Power supply shuts down intermittently

Use this information to troubleshoot the computer.

Cause	Solution
If the computer has a voltage selector, the voltage selector switch on the rear of the computer chassis (select products only) is not switched to the correct line voltage (115 V or 230 V).	Select the proper AC voltage using the selector switch.
Power supply will not turn on because of internal power supply fault.	Replace the power supply.

Solving hard drive problems

These tables provide common causes and solutions for hard drive problems.

Hard drive error occurs

Use this information to troubleshoot the computer.

Cause	Solution
Hard disk has bad sectors or has failed.	1. In Windows, type `file` in the taskbar search box, and then select **File Explorer** from the list of applications. In the left column, expand **This PC**, right-click a drive, select **Properties**, and then select the **Tools** tab. Under **Error checking**, select **Check**. 2. Use a utility to locate and block usage of bad sectors. If necessary, reformat the hard disk.

Disk drive transaction problem

Use this information to troubleshoot the computer.

Cause	Solution
Either the directory structure is bad or there is a problem with a file.	In Windows, type `file` in the taskbar search box, and then select **File Explorer** from the list of applications. In the left column, expand **This PC**, right-click a drive, select **Properties**, and then select the **Tools** tab. Under **Error checking**, select **Check**.

Drive not found (identified)

Use this information to troubleshoot the computer.

Cause	Solution
Cable could be loose.	Check cable connections.
The system might not have automatically recognized a newly installed device.	See reconfiguration directions in the Solving hardware installation problems on page 53 section. If the system still does not recognize the new device, check to see if the device is listed in Computer Setup. If it is listed, the probable cause is a driver problem. If it is not listed, the probable cause is a hardware problem. If this is a newly installed drive, run the Computer Setup utility, and add a POST delay under **Advanced** > **Boot Options**.
The device is attached to a SATA port that has been hidden in Computer Setup.	Run the Computer Setup utility and be sure that **Device Available** is selected for the device's SATA port in **Advanced** > **Port Options**.
Drive responds slowly immediately after startup.	Run Computer Setup and increase the POST Delay in **Advanced** > **Boot Options**.

Nonsystem disk/NTLDR missing message

Use this information to troubleshoot the computer.

Cause	Solution
The system is trying to start from the hard drive, but the hard drive might have been damaged.	Perform Drive Protection System (DPS) testing in system ROM.
System files missing or not properly installed.	1. Insert bootable media and restart the computer. 2. Boot to the windows installation media, and select the recovery option. If only a restore kit is available, then select the **File Backup Program** option, and then restore the system. 3. Install system files for the appropriate operating system.
Hard drive boot has been disabled in Computer Setup.	Run the Computer Setup utility, and enable the hard drive entry in the **Advanced** > **Boot Options** list.
Bootable hard drive is not attached as first in a multiple hard drive configuration.	If attempting to boot from a hard drive, be sure that it is attached to the system board dark blue SATA connector.
Bootable hard drive is not listed first in the Boot Order.	Run the Computer Setup utility, and select **Advanced** > **Boot Options**, and be sure that the bootable hard drive is listed immediately under the **Hard Drive** entry.

Computer will not boot from hard drive

Use this information to troubleshoot the computer.

Cause	Solution
The device is attached to a SATA port that has been hidden in Computer Setup.	1. Check SATA cable connections. 2. Run the Computer Setup utility, and be sure that **Device Available** is selected for the device's SATA port in **Advanced** > **Port Options**.
Boot order is not correct.	Run the Computer Setup utility, and change the boot sequence in **Advanced** > **Boot Options**.

Hard drive is damaged.	Observe whether the front panel power light is blinking red and whether any beeps are heard. See the Worldwide Limited Warranty for terms and conditions.

Computer seems to be locked up

Use this information to troubleshoot the computer.

Cause	Solution
Program in use has stopped responding to commands.	1. Use the task manager to close programs that do not respond. 2. Attempt the normal Windows shutdown procedure. If this fails, press the power button for 4 or more seconds to turn off the power. To restart the computer, press the power button again.

Solving audio problems

If the computer has audio features and you encounter audio problems, see the common causes and solutions listed in these tables.

Sound cuts in and out

Use this information to troubleshoot the computer.

Cause	Solution
Processor resources are being used by other open applications.	Shut down all open processor-intensive applications.

Sound does not come out of the speaker or headphones

Use this information to troubleshoot the computer.

Cause	Solution
Software volume control is turned down or muted.	Double-click the **Speaker** icon on the taskbar, be sure that **Mute** is not selected, and use the volume slider to adjust the volume. You can perform this action with the touch-sensitive buttons on the front of the computer.
Audio is hidden in Computer Setup.	Enable the audio in Computer Setup: **Advanced** > **Built-in Device Options**.
The external speakers are not turned on.	Turn on the external speakers.
Headphones or devices connected to the line-out connector mute the internal speaker.	Turn on and use headphones or external speakers, if connected, or disconnect headphones or external speakers.
Computer is in the Sleep state.	Press the power button to resume from the Sleep state. IMPORTANT: When attempting to resume from the Sleep state, do not hold down the power button for more than 4 seconds. Otherwise, the computer will shut down, and you will lose any unsaved data.
Internal speaker is disabled in Computer Setup.	Enable the internal speaker in Computer Setup. Select **Advanced** > **Built-in Device Options**.
Some applications can select which audio output device is used.	Be sure that the application has selected the correct audio device.

The operating system controls might be set to use a different audio device as the default output device than what is expected.	Set the operating system to use the correct audio device.

Computer appears to be locked up while recording audio

Use this information to troubleshoot the computer.

Cause	Solution
The hard disk might be full.	Before recording, be sure that there is enough free space on the hard disk. You can also try recording the audio file in a compressed format.

Line-in jack is not functioning properly

Use this information to troubleshoot the computer.

Cause	Solution
Jack has been reconfigured in the audio driver or application software.	In the audio driver or application software, reconfigure the jack or set the jack to its default value.

Solving printer problems

If you encounter printer problems, see the documentation that came with the printer and the common causes and solutions listed in these tables.

Printer will not print

Use this information to troubleshoot the computer.

Cause	Solution
Printer is not turned on and online.	Turn the printer on and be sure that it is online.
The correct printer drivers for the application are not installed.	1. Install the correct printer driver for the application. 2. Try printing using the MS-DOS command: `DIR C:\ > [printer port]` where `[printer port]` is the address of the printer being used. If the printer works, reload the printer driver. To run MS-DOS commands, press the Windows key + r, type `cmd` in the **Open** box, and then select **OK**.
If you are on a network, you might not have made the connection to the printer.	Make the proper network connections to the printer.
Printer might have failed.	Run printer self-test.
The printer might be out of paper.	Check the paper tray, and refill it if it is empty.

Printer will not turn on

Use this information to troubleshoot the computer.

Cause	Solution
The cables might not be connected properly.	Reconnect all cables, and check the power cord and electrical outlet.

Printer prints garbled information

Use this information to troubleshoot the computer.

Cause	Solution
The correct printer driver for the application is not installed.	Install the correct printer driver for the application.
The cables might not be connected properly.	Reconnect all cables.
Printer memory might be overloaded.	Reset the printer by turning it off for 1 min, and then turn it back on.

Solving keyboard and mouse problems

If you encounter keyboard or mouse problems, see the documentation that came with the equipment and the common causes and solutions listed in these tables.

Keyboard commands and typing are not recognized by the computer

Use this information to troubleshoot the computer.

Cause	Solution
Keyboard connector is not properly connected.	Shut down the computer, reconnect the keyboard, and then restart the computer.
Program in use has stopped responding to commands.	Shut down your computer using the mouse, and then restart the computer.
Keyboard needs repairs.	See the Worldwide Limited Warranty for terms and conditions.
Computer is in the Sleep state.	Press the power button to resume from the Sleep state. IMPORTANT: When attempting to resume from the Sleep date, do not hold down the power button for more than 4 seconds. Otherwise, the computer will shut down, and you will lose any unsaved data.

Mouse does not respond to movement or is too slow

Use this information to troubleshoot the computer.

Cause	Solution
Mouse connector is not properly plugged into the back of the computer.	Shut down the computer using the keyboard. 1. Press the ctrl and esc keys at the same time (or press the Windows logo key) to display the **Start** menu. 2. Use the arrow keys to scroll to and select the power icon at the top right on the menu, and then press enter. 3. Use the arrow keys to select **Shut Down**, and then press enter. 4. After the shutdown is complete, plug the mouse connector into the back of the computer (or the keyboard) and restart.

Program in use has stopped responding to commands.	Shut down the computer using the keyboard, and then restart the computer.
Mouse might need repair.	See the Worldwide Limited Warranty for terms and conditions.
Computer is in the Sleep state.	Press the power button to resume from the Sleep state. IMPORTANT: When attempting to resume from the Sleep state, do not hold down the power button for more than 4 seconds. Otherwise, the computer will shut down, and you will lose any unsaved data.
If using a wireless mouse, you might need to resynchronize the mouse with the computer.	Follow the instructions that came with the mouse.

Solving hardware installation problems

You might need to reconfigure the computer when you add or remove hardware, such as an additional drive or expansion card.

If you install a plug and play device, Windows automatically recognizes the device and configures the computer. If you install a device that is not plug and play, you must reconfigure the computer after completing installation of the new hardware. In Windows, use the **Add Hardware Wizard**, and follow the instructions that appear on the screen.

To open the Add Hardware Wizard, open a command prompt and type .

⚠ WARNING! When the computer is plugged into an AC power source, voltage is always applied to the system board. To reduce the risk of personal injury from electrical shock, hot surfaces, or both, be sure to disconnect the power cord from the AC outlet and allow the internal system components to cool before touching.

A new device is not recognized as part of the system

Use this information to troubleshoot the computer.

Cause	Solution
Cables of new external device are loose or power cables are unplugged.	Be sure that all cables are properly and securely connected and that pins in the cable or connector are not bent down.
Power switch of new external device is not turned on.	Turn off the computer, turn on the external device, and then turn on the computer to integrate the device with the computer system.
When the system advised you of changes to the configuration, you did not accept them.	Reboot the computer and follow the instructions for accepting the changes.
A plug and play board might not automatically configure when added if the default configuration conflicts with other devices.	Use Windows Device Manager to clear the automatic settings for the board, and choose a basic configuration that does not cause a resource conflict. You can also use Computer Setup to reconfigure or disable devices to resolve the resource conflict. To access Device Manager in Windows, type `device manager` in the taskbar search box, and then select **Device Manager** from the list of applications.
USB ports on the computer are disabled in Computer Setup.	Run the Computer Setup utility and ensure that **Device available** is selected for appropriate USB ports under **Advanced** > **Port Options**.

Computer will not start

Use this information to troubleshoot the computer.

Cause	Solution
Incorrect memory modules were used in the upgrade, or memory modules were installed in the wrong location.	1. Review the documentation that came with the system to determine if you are using the correct memory modules and to verify the proper installation. NOTE: DIMM1 or XMM1 must always be installed. DIMM1 must be installed before DIMM3. 2. Observe the beeps and lights on the front of the computer. Beeps and blinking lights are codes for specific problems. 3. If you still cannot resolve the issue, contact Customer Support.

Solving network problems

Some common causes and solutions for network problems are listed in these tables. The guidelines do not discuss the process of debugging the network cabling.

Network driver does not detect network controller

Use this information to troubleshoot the computer.

Cause	Solution
Network controller is disabled.	1. Run Computer Setup and enable network controller. 2. Enable the network controller in the operating system using Device Manager. To access Device Manager in Windows, type `device manager` in the taskbar search box, and then select **Device Manager** from the list of applications.
Incorrect network driver.	Check the network controller documentation for the correct driver or obtain the latest driver from the manufacturer's website.

Network status link light never blinks

Use this information to troubleshoot the computer.

NOTE: The network status light is supposed to blink when there is network activity.

Cause	Solution
No active network is detected.	Check cabling and network equipment for proper connection.
Network controller is not set up properly.	Check for the device status within Windows, such as Device Manager for driver load and the Network Connections applet within Windows for link status. To access Device Manager in Windows, type `device manager` in the taskbar search box, and then select **Device Manager** from the list of applications.

Network controller is disabled.	1. Run Computer Setup and enable network controller. 2. Enable the network controller in the operating system using Device Manager. To access Device Manager in Windows, type `device manager` in the taskbar search box, and then select **Device Manager** from the list of applications.
Network driver is not properly loaded.	Reinstall network drivers.
System cannot autosense the network.	Disable autosensing capabilities, and force the system into the correct operating mode.

Diagnostics reports a failure

Use this information to troubleshoot the computer.

Cause	Solution
The cable is not securely connected.	Be sure that the cable is securely attached to the network connector and that the other end of the cable is securely attached to the correct device.
The cable is attached to the incorrect connector.	Be sure that the cable is attached to the correct connector.
There is a problem with the cable or a device at the other end of the cable.	Be sure that the cable and device at the other end are operating correctly.
The network controller is defective.	Contact an authorized service provider.

Diagnostics passes, but the computer does not communicate with the network

Use this information to troubleshoot the computer.

Cause	Solution
Network drivers are not loaded, or driver parameters do not match current configuration.	Be sure that the network drivers are loaded and that the driver parameters match the configuration of the network controller. Be sure that the correct network client and protocol are installed.
The network controller is not configured for this computer.	Select the **Network and Sharing Center** icon in the **Control Panel**, and configure the network controller. To access Control Panel in Windows, type `control panel` in the taskbar search box, and then select **Control Panel** from the list of applications.

Network controller stopped working when an expansion board was added to the computer

Use this information to troubleshoot the computer.

Cause	Solution
The network controller requires drivers.	Verify that the drivers were not accidentally deleted when the drivers for a new expansion board were installed.

Network controller stops working without apparent cause

Use this information to troubleshoot the computer.

Cause	Solution
The cable is not securely connected.	Be sure that the cable is securely attached to the network connector, and that the other end of the cable is securely attached to the correct device.
The network controller is defective.	Contact an authorized service provider.

Cannot connect to network server when attempting remote system installation

Use this information to troubleshoot the computer.

Cause	Solution
The network controller is not configured properly.	Verify that network connectivity exists, a DHCP Server is present, and the Remote System Installation Server contains the network interface card (NIC) drivers for your NIC.

Solving memory problems

If you encounter memory problems, some common causes and solutions are listed in these tables.

IMPORTANT: Depending on the Management Engine (ME) settings, power can still be supplied to the DIMMs when the computer is turned off. To avoid damage to the DIMMs or the system board, you must unplug the computer power cord before attempting to reseat, install, or remove a memory module.

For those systems that support error correction code (ECC) memory, HP does not support mixing ECC and non-ECC memory. Otherwise, the computer will not boot the operating system.

NOTE: The memory count will be affected by configurations with the ME enabled. The ME uses 8 MB of system memory in single-channel mode or 16 MB of memory in dual-channel mode to download, decompress, and execute the ME firmware for Out-of-Band (OOB), third-party data storage, and other management functions.

System will not boot or does not function properly after installing additional memory modules

Use this information to troubleshoot the computer.

Cause	Solution
A memory module is not installed in the DIMM1 or XMM1 socket.	Verify that a memory module is installed in the DIMM1 or XMM1 socket on the system board. This socket must be populated with a memory module.
Memory module is not the correct type or speed grade for the system, or the new memory module is not seated properly.	Replace module with the correct industry-standard device for the computer. On some models, ECC and non-ECC memory modules cannot be mixed.

Out of memory error

Use this information to troubleshoot the computer.

Cause	Solution
You have run out of memory to run the application.	Check the application documentation to determine the memory requirements.

Memory count during POST is wrong

Use this information to troubleshoot the computer.

Cause	Solution
The memory modules might not be installed correctly.	Check that the memory modules have been installed correctly and that proper modules are used.
Integrated graphics might use system memory.	No action required.

Insufficient memory error during operation.

Use this information to troubleshoot the computer.

Cause	Solution
Too many Terminate and Stay Resident programs (TSRs) are installed.	Delete any TSRs that you do not need.
You have run out of memory for the application.	Check the memory requirements for the application or add more memory to the computer.

Solving USB flash drive problems

If you encounter USB flash drive problems, common causes and solutions are listed in these tables.

USB flash drive is not seen as a drive letter in Windows

Use this information to troubleshoot the computer.

Cause	Solution
The drive letter after the last physical drive is not available.	Change the default drive letter for the flash drive in Windows.

USB flash drive not found (identified)

Use this information to troubleshoot the computer.

Cause	Solution
The device is attached to a USB port that has been hidden in Computer Setup.	Run the Computer Setup utility and enable the USB ports in **Advanced** > **Port Options**.
The device was not properly seated before startup.	Be sure that the device is fully inserted into the USB port before applying power to the system

System will not boot from USB flash drive

Use this information to troubleshoot the computer.

Cause	Solution
Boot order is not correct.	Run the Computer Setup utility, and change the boot sequence in **Advanced** > **Boot Options**.

Removable Media Boot is disabled in the Computer Setup utility.	Run the Computer Setup utility, and enable booting to removable media in **Advanced** > **Boot Options**. Be sure that USB is enabled in **Storage** > **Boot Order**.

Solving internet access problems

If you encounter internet access problems, consult your internet service provider (ISP), or see the common causes and solutions listed in these tables.

Unable to connect to the internet

Use this information to troubleshoot the computer.

Cause	Solution
Internet Service Provider (ISP) account is not set up properly.	Verify Internet settings, or contact your ISP for assistance.
Web browser is not set up properly.	Verify that the web browser is installed and set up to work with your ISP.
Cable/DSL modem is not plugged in.	Plug in the cable/DSL modem. You should see a power light on the front of the cable/DSL modem.
Cable/DSL service is not available or has been interrupted due to bad weather.	Try connecting to the internet at a later time or contact your ISP. If the cable/DSL service is connected, the cable light on the front of the cable/DSL modem will be on.
The CAT5 UTP cable is disconnected.	Connect the CAT5 UTP cable between the cable modem and the computer's RJ-45 connector. If the connection is good, the PC light on the front of the cable/DSL modem will be on.
IP address is not configured properly.	Contact your ISP for the correct IP address.
Cookies are corrupted. A "cookie" is a small piece of information that a web server can store temporarily with the web browser. Cookies are useful because the enable the browser remember some specific information that the Web server can later retrieve.	1. Type `control panel` in the taskbar search box, and then select **Control Panel** from the list of applications. 2. Select **Internet Options**. 3. In the **Browsing history** section, select the **Delete** button. 4. Select the **Cookies and website data** check box, and select the **Delete** button.

Cannot automatically launch internet programs

Use this information to troubleshoot the computer.

Cause	Solution
You must log on to your ISP before some programs will start.	Log on to your ISP and launch the program.

Solving software problems

Most software problems occur as a result of these situations:

- The application was not installed or configured correctly.
- Insufficient memory is available to run the application.

- A conflict exists between applications.
- All the necessary device drivers might not have been installed.
- If you have installed an operating system other than the factory-installed operating system, it might not be supported on the system.

If you encounter software problems, see the applicable solutions listed in the following table.

Computer will not start up and the HP logo does not appear

Use this information to troubleshoot the computer.

Cause	Solution
ROM issue - POST error has occurred.	Observe the beeps and lights on the front of the computer. See the Worldwide Limited Warranty for terms and conditions.

“Illegal Operation has Occurred” error message is displayed

Use this information to troubleshoot the computer.

Cause	Solution
Software being used is not Microsoft-certified for your version of Windows.	Verify that the software is certified by Microsoft® for your version of Windows (see program packaging for this information).
Configuration files are corrupt.	If possible, save all data, close all programs, and restart the computer.

6 Computer Setup (F10) Utility

This information provides details of the Computer Setup Utility.

- Change settings from the defaults or restore the settings to default values.
- View the system configuration, including settings for processor, graphics, memory, audio, storage, communications, and input devices.
- Modify the boot order of bootable devices such as hard drives or USB flash media devices.
- Enter the Asset Tag or property identification number assigned by the company to this computer.
- Enable the power-on password prompt during system restarts (warm boots) as well as during startup.
- Establish an administrator password that controls access to the Computer Setup (F10) Utility and the settings described in this section.
- Establish minimum requirements for valid passwords, including length and required types of characters.
- Secure integrated I/O functionality, including the serial, USB, or audio, or embedded NIC, so that they cannot be used until they are unsecured.
- Enable or disable different types of boot sources.
- Configure features such as Secure Boot, power management, virtualization support, and language and keyboard type used in Setup and POST.
- Replicate the system setup by saving system configuration information about a USB device and restoring it on one or more computers.
- Enable or disable DriveLock security or securely erase a hard drive.

Using Computer Setup (F10) Utilities

You can access Computer Setup only by turning the computer on or restarting the system.

To access the Computer Setup Utilities menu, complete these steps:

1. Turn on or restart the computer.
2. Repeatedly press f10 when the power button light turns white to access the utility.

   You can also press esc to see a menu that allows you to access different options available at startup, including the Computer Setup utility.

   A choice of four headings appears in the Computer Setup Utilities menu: Main, Security, Advanced, and UEFI Drivers.

NOTE: If you do not press f10 at the appropriate time, you must restart the computer and again repeatedly press f10 when the power button light turns white to access the utility.

3. Use the arrow (left and right) keys to select the appropriate heading. Use the arrow (up and down) keys to select the option you want, and then press enter. To return to the Computer Setup Utilities menu, press esc.

4. To apply and save changes, select **Main** > **Save Changes and Exit**.

   - If you have made changes that you do not want applied, select **Ignore Changes and Exit**.
   - To restore settings from the Advanced and Main menus to original values, select **Apply Factory Defaults and Exit**.
   - To restore settings from the Advanced and Main menus to those previously saved by **Save Custom Defaults**, select **Apply Custom Defaults and Exit**. If no custom defaults have been saved, factory defaults are used.

NOTE: You cannot modify settings in the Security menu by selecting **Apply Defaults**. You reset those values by selecting **Restore Security Settings to Factory Defaults** at the bottom of the **Security** menu.

NOTE: Not all settings shown in the following sections are available for all models.

IMPORTANT: Do not turn computer power off while the BIOS is saving the Computer Setup (F10) changes because the settings could become corrupted. It is safe to turn off the computer only after exiting the F10 Setup screen.

Computer Setup Main

This table provides information about the Computer Setup Main menu.

NOTE: Support for specific Computer Setup options can vary, depending on the hardware configuration.

Table 6-1 Computer Setup Main

Option	Description
System Information	Lists all information in following list if **Advanced System Information** is selected. Lists smaller subset if **Basic System Information** is selected. • Product name • Installed memory size • Processor type • Processor cache size (L1/L2/L3) • Processor speed • MicroCode revision • Processor stepping • Memory speed • DIMM size (for each installed module) • System BIOS version • ME Firmware version (Intel only) • Reference code revision • Super I/O firmware version • USB Type-C® controller firmware version • Serial number • SKU number • UUID (Universally Unique Identifier) • Asset tracking number • Feature byte • Build ID • Product family • System board ID • System board CT number • Integrated MAC Address
System Diagnostics	If the hard drive has the HP Advanced Diagnostics installed, the application launches. If HP Advanced Diagnostics is not installed, a basic version that is built into the BIOS provides the capability to perform the following functions: • Memory Test • Hard Drive Check • Language

Table 6-1 Computer Setup Main (continued)

Option	Description
BIOS Event Log	**View BIOS Event Log** Displays a list of events, alerts, or warnings that have been logged since the log was last cleared. **Export to USB Key** Saves a file named BiosEventLog.txt containing the log entries to an inserted USB storage device. **Clear BIOS Event Log on Next Boot** When selected, the BIOS clears the event log when the user saves and exits. Default is disabled.
Update System BIOS	Lets you update the system BIOS from www.hp.com or another network server, from a removable USB drive, or from a file located on the hard drive. **Check [current selection] for BIOS Updates** The string that appears here depends on the setting in **BIOS Update Preferences**. **Lock BIOS Version** If this option is selected, the system is locked to the current BIOS version, and updates are not allowed. **Native OS Firmware Update Service** Allows the operating system to drive firmware updates (for example, Windows Update). **BIOS Rollback Policy** • Unrestricted Rollback to older BIOS: Lets you roll back to any previous version of BIOS. • Restricted Rollback to older BIOS: If selected, **Minimum BIOS Version** becomes active, which lets you manually enter the minimum BIOS version that you can roll back to. **Minimum BIOS Version** Defaults to current version. Read-only unless restricted rollback is selected. **Allow BIOS Updates Using a Network** Lets you configure scheduled, automatic BIOS updates through the network. **BIOS Update Preferences** • Check for Update on Next Reboot: Default is disabled. • BIOS Source: Lets you select either HP.com or a custom URL. If **Custom URL** is selected, **Edit Custom URL** becomes active. HP recommends using a custom URL only for a managed IT environment.

Table 6-1 Computer Setup Main (continued)

Option	Description
Update System BIOS (cont.)	**Automatic BIOS Update Setting** Allows configuration of a periodic check for updates: NOTE: If Microsoft® Windows® BitLocker Drive Encryption (BDE) is enabled, it must be temporarily suspended before the BIOS is flashed. • Do not update • Checking for updates and prompt the user to accept or reject the update at that time • Checking for updates and install all new versions • Checking for updates and install only new versions marked important **BIOS Update Frequency** • Daily • Weekly • Monthly (default) **Network Configuration Settings** Lets you configure the network connection to the server that is the host for system firmware updates. **Update BIOS Using Local Media** Lets you update system date and time. Lets you access files on either USB storage or the hard drive. The HP BIOS Update and Recovery application included in BIOS Softpaqs at www.hp.com copies the BIOS file to the correct location on the hard drive or USB device.
System IDs	Lets you set the following values: • Asset Tracking Number • Ownership Tag
Replicated Setup	Lets you set the following values: • **Backs up current settings to USB device** Saves system configuration to a formatted USB flash media device. • **Restores current settings from USB device** Restores system configuration from a USB flash media device.
Save Custom Defaults	Saves the current system configuration settings as the custom default set.
Apply Custom Defaults and Exit	Applies the custom default settings to the computer after rebooting. Does not apply to options in the **Security** menu.
Apply Factory Defaults and Exit	Restores the factory system configuration settings to the computer after rebooting. Does not apply to options in the **Security** menu.
Ignore Changes and Exit	Exits Computer Setup without applying or saving any changes.
Save Changes and Exit	Saves changes to current system configuration, exits Computer Setup, and reboots.

Computer Setup Security

This table provides information about the Computer Setup Security menu.

NOTE: Support for specific Computer Setup options can vary, depending on the hardware configuration.

Table 6-2 Computer Setup Security

Option	Description
Create BIOS Administrator Password	Lets you set and enable a BIOS administrator password, which controls access to the following features: • Setup Menu (F10) • Update system ROM • WMI commands that change system settings • BIOS Configuration Utility (BCU) • Power-on password NOTE: Creating a BIOS user disables the Fast Boot option.
Change BIOS Administrator Password (This selection is active only if a BIOS administrator password is set.)	Lets you change the BIOS administrator password. You must know the current password to be able to change it.
Create POST Power-On Password	Lets you change or delete power-on password. The power-on password prompt appears after a power cycle or reboot. If the user does not enter the correct power-on password, the unit will not boot.
Change POST Power-On Password (This selection is active only if a BIOS administrator password is set.)	Lets you change the POST power-on password. You must know the current password to be able to change it.
Password Policies	Let you set the guidelines for a valid password. Options include: • Password minimum length • Requires at least one symbol • Requires at least one number • Requires at least one uppercase character • Requires at least one lowercase character • Allow spaces

Table 6-2 Computer Setup Security (continued)

Option	Description
Administrator Authentication Policies	Let you set limitations on some boot features restricting them to admin only, including: • Prompt for administrator authorization to access: – Boot menu in POST – System Recovery – Network boot – BIOS update • Allow the use of administrator credentials to modify the power-on password.

Table 6-2 Computer Setup Security (continued)

Option	Description
Security Configuration	**Trusted Platform Module (TPM) Embedded Security** • **TPM Specification Version** Displays the current TPM version. • **TPM Device** Lets you set the TPM as available or hidden. Default is available. • **TPM State** Select to enable the TPM. Default is disabled. • **Clear TPM** Select to reset the TPM to an unowned state. After the TPM is cleared, it is also turned off. To temporarily suspend TPM operations, turn the TPM off instead of clearing it. Default is no. IMPORTANT: Clearing the TPM resets it to factory defaults and turns it off. You will lose all created keys and data protected by those keys. • **TPM Activation Policy** ○ F1 to boot ○ Allow user to reject (default) ○ No prompts **BIOS Sure Start** • Verify Boot Block on every boot: Select to enable HP Sure Start. Default is disabled. • Network Controller Configuration Restore: Select to restore the network controller parameters to the factory state saved in the HP Sure Start Private nonvolatile (flash) memory. This setting is available only on computers with built-in NIC. NOTE: This process can take up to 30 seconds. You need to restore this only when the Network Controller Configuration mismatch warning is set. • Dynamic Runtime Scanning of Boot Block: Verifies the integrity of the BIOS boot block region several times each hour while the computer is running. Default is enabled. • Sure Start BIOS Settings Protection: When enabled, HP Sure Start locks all critical BIOS settings and provides enhanced protection for these settings using nonvolatile (flash) memory. Default is off. NOTE: An administrator password must be set to activate this setting. • Sure Start Secure Boot Keys Protection: Saves a backup copy of Secure Boot Keys so that they can be recovered if someone attempts to alter them in an unauthorized manner. • Enhanced HP Firmware Runtime Intrusion Prevention and Detection: Enables monitoring of HP system firmware executing out of main memory while the operating system is running. Any anomalies detected in HP system firmware that is active while the operating system is running will result in a Sure Start security event being generated.

Table 6-2 Computer Setup Security (continued)

Option	Description
Security Configuration (cont.)	• Sure Start Security Event Policy. Controls HP Sure Start behavior upon identifying a critical security event, such as any modification to HP firmware, while the operating system is running. – Log Event Only: HP Sure Start will log all critical security events in the HP Sure Start audio log within the HP Sure Start nonvolatile (flash) memory. – Log Event and notify user: In addition to logging all critical security events, HP Sure Start will notify the user within the operating system that a critical event has occurred. – Log Event and power off system: In addition to logging all critical security events, HP Sure Start turns off the computer upon detecting a HP Sure Start Security Event. Because of the potential for data loss, HP recommends this setting only in situations where security integrity of the system is a higher priority than the risk of potential data loss. • Sure Start Security Event Boot Notification: Lets you enable a warning message on the startup screen if there is a Sure Start event (BIOS recovery, Memory intrusion, etc.) • Virtualization Based BIOS Protection: Uses virtualization hardware to protect HP BIOS from the UEFI Expansion Driver and PCI Expansion ROM driver modules. Default is enabled. • Virtualization Based BIOS Protection Manual Recovery: Default is disabled. **Secure Boot Configuration**. Lets you be sure that an operating system is legitimate before booting to it, making Windows resistant to malicious modification from preboot to full operating system booting, preventing firmware attacks. UEFI and Windows Secure Boot only allow code signed by preapproved digital certificates to run during the firmware and OS boot process. NOTE: An administrator password must be set to activate this setting. Secure Boot must also be enabled. • Secure Boot: Default is disabled. • Secure Boot Key Management: Lets you manage the custom key settings. NOTE: Access to these settings requires Sure Start Secure Boot Keys Protection to be disabled. Import Custom Secure Boot Keys: Default is disabled. Clear Secure Boot keys: Lets you delete any previously loaded custom boot keys. Clearing keys will disable secure boot. Default is disabled. Reset Secure Boot keys to factory defaults: Default is disabled. Enable MS UEFI CA key: Disabling this setting alters the Secure Boot key list to further restrict the allowed software components. Set this option to disable to support Device Guard. Default is enabled. • Ready BIOS for Device Guard Use: Requires BIOS Administrator password to be configured and Secure Boot to be enabled. **Secure Platform Management (SPM)** • SPM Current State: Displays the current state. Also lets you change the state. • Unprovision SPM: Deprovisions SPM, which causes HP Sure Run to revert to the inactive state and return HP Sure Recover to default settings. • HP Sure Run Current State: Displays the current state. Also lets you change the state. Deactivate HP Sure Run: Deactivates HP Sure Run without deprovisioning SPM.

Table 6-2 Computer Setup Security (continued)

Option	Description
Security Configuration (cont.)	**Secure Platform Management (SPM)** • EBAM Current State: Displays the current state. Also lets you change the state. Disable EBAM: Disables Enhanced BIOS Authentication Mode (EBAM). • Deactivate HP Sure Run: Requires BIOS Administrator password to be configured. • Local Access Key: Indicates is the key is present. Also lets you clear the keys and reboot. Clear EBAM Local Access Key(s) and Reboot. Deletes all currently established local access keys created for Enhanced BIOS Authentication Mode (EBAM). **Physical Presence Interface** When set to enabled, the user is notified at system power up when changes are made to system security policy. The user must manually agree to those changes before the change is confirmed. Default is enabled. **Smart Cover** The Smart Cover Lock (select products only) is a software-controllable solenoid lock that restricts unauthorized access to the system's internal components. • Cover Lock: Default is unlock. • Cover Removal Sensor: Lets you disable the cover sensor or configure what action is taken if the computer cover is removed. Default is disabled. NOTE: **Notify user** alerts the user with a POST error on the first boot after the sensor detects removal of the cover. If the password is set, **Administrator Password** requires that the password be entered to boot the computer if the sensor detects that the cover has been removed. **Trusted Execution Technology (TXT)** Enables Trusted Execution Technology on select Intel-based systems. Default is disabled. NOTE: Enabling this feature disables OS management of TPM, prevents a reset of the TPM, and constrains the configuration of VTx, VTd, and TPM.

Table 6-2 Computer Setup Security (continued)

Option	Description
Utilities	**Hard Drive Utilities** • **Save/Restore GPT of System Hard Drive** Enabling this feature saves the GUID Partition Table (GPT) of the system hard drive. If the GPT is subsequently changed, the user is prompted to choose whether to restore GPT. Default is disabled. • **Boot Sector (GPT) Recovery Policy** Allows selection of the default action when a GPT event occurs. • **DriveLock/Automatic DriveLock** Allows you to assign or modify a master or user password for hard drives. When this feature is enabled, the user is prompted to provide one of the DriveLock passwords during POST. If neither is successfully entered, the hard drive remains inaccessible until one of the passwords is successfully provided during a subsequent cold-boot sequence. NOTE: This selection appears only when at least one drive that supports the DriveLock feature is attached to the system. IMPORTANT: Be aware that these settings take place immediately. It is not necessary to save. IMPORTANT: Be sure to document the DriveLock password. Losing a DriveLock password will render a drive permanently locked. NOTE: Disable DriveLock on NVMe drives before using applications for hardware-based encryption. After you select a drive, the following options are available: – Set DriveLock Master Password: Sets the drive's master password but does not enable DriveLock. – Enable DriveLock: Sets the drive's user password and enables DriveLock. • **Secure Erase** Lets you select a hard drive to completely erase. After you erase a hard drive with a program that uses Secure Erase firmware commands, no file recovery program, partition recovery program, or other data recovery method can extract data from the drive. • **Allow OPAL Hard Drive SID Authentication** BIOS supports drive encryption using the DriveLock feature by creating the storage device's ownership key. If BIOS creates the key, any third-party applications (including other encryption software) are not allowed to perform certain drive operations such as establishing their own key using SID. Encryption software applications may or may not be limited by SID authentication lockout depending on how they are designed. Default is disabled.
Absolute Persistence Module Current State	Shows the current state of the Absolute Persistence module. Yes: Disabled No: Available
System Management Command	Allows authorized personnel to reset security settings during a service event. Default is enabled.
Restore Security Settings to Factory Default	This action resets security devices, clears BIOS passwords (not including DriveLock), and restores settings in the **Security menu** to factory defaults.

Computer Setup Advanced

This table provides information about the Computer Setup Advanced menu.

NOTE: Support for specific Computer Setup options can vary, depending on the hardware configuration.

Table 6-3 Computer Setup Advanced (for advanced users)

Option	Heading
Display Language	Lets you select the language of the menus in F10 Setup and the keyboard layout.
Scheduled Power-On	This feature wakes the system when it is off at a specified date and time.
Boot Options	Select the devices that the computer can boot from, as well as other options, including: • Startup Delay (sec): Enabling this feature adds a user-specified delay to the POST process. One purpose for the delay is to provide additional time to activate hotkeys such as esc for the Startup Menu or f10 for Computer Setup. • Fast Boot: Default is disabled. • CD-ROM Boot (select products only): Default is enabled. • USB Storage Boot: Default is enabled. • Network (PXE) Boot: Default is enabled. • Network (PXE) Boot Configuration: – IPv4 Before IPv6 (default) – IPv6 Before IPv4 – IPv4 Disabled – IPv6 Disabled • After Boot Device Not Found – Stop (default) – UEFI Diagnostics – Restart • After Power Loss: Default is Power Off. – Power off: Causes the computer to remain off when power is restored. – Power on: Causes the computer to turn on automatically as soon as power is restored. – Previous state: Causes the computer to turn on automatically as soon as power is restored, if it was on when power was lost. NOTE: If the system is configured to Power On from Keyboard Ports (see Power Management Options), this setting is forced to Power On. • Prompt on Memory Size Change: Default is enabled. • Prompt on Fixed Storage Change: Default is disabled.

Table 6-3 Computer Setup Advanced (for advanced users) (continued)

Option	Heading

Boot Options	• After Boot Device Not Found: Default is Stop.
	  ▪ Stop: Shows boot failed message only if no boot devices are found.
	  ▪ UEFI Diagnostics: Start the HP UEFI Diagnostics Tool to check if device issues found.
	  ▪ Restart: Restarts the computer to if boot device is not found.
	• Audio Alerts During Boot: Default is enabled. When disabled, most audible beeps from errors, warnings, and password prompts during boot up are suppressed.
	• Numlock on at boot: Default is disabled.
	• UEFI Boot Order: Specify the order in which UEFI boot sources are checked for a bootable operating system image. The default boot order is:
	  1. USB
	  2. SATA DVD
	  3. SATA hard drives
	  4. M.2 devices
	  5. Network boot
	NOTE: Use the UP and DOWN arrows to highlight an item. Press enter to select. Use the UP and DOWN arrows to move a selected item. Press f5 to enable or disable. Press esc to exit.
	Shortcut to Temporarily Override Boot Order
	To boot **one time** from a device other than the default device specified in Boot Order, restart the computer and press esc (to access the Startup menu) and then f9 (Boot Menu), or only f9 (skipping the Startup menu) when the power button light turns white. After POST is completed, a list of bootable devices is displayed. Use the arrow keys to select the preferred bootable device and press enter. The computer then boots from the selected non-default device for this one time.

Table 6-3 Computer Setup Advanced (for advanced users) (continued)

Option	Heading
HP Sure Recover	**HP Sure Recover** If enabled and HP Sure Recover is launched, the system firmware honors local and remote requests to reinstall the operating system. If it is disabled, all requests to reinstall the operating system are ignored. Default is enabled. **Recover from Network** Allows system firmware to retrieve the recovery agent from the network. If disabled, system firmware retrieves the recovery agent from a local drive. Default is enabled. **Recover after Boot Failure** If enabled and no bootable UEFI operating system is found, system firmware launches HP Sure Recover. Default is disabled. **Recover before Boot Failure Recovery** If enabled and HP Sure Recover is launched because of a boot failure, the user is notified of the boot failure and asked to choose whether to start or cancel HP Sure Recover. This setting is displayed only if **Recover after Boot Failure** is selected. **Recovery Agent** Displays recovery agent information. This information is displayed only if **Recover from Network** is selected. **Recovery Image** Displays recovery image information. This information is displayed only if **Recover from Network** is selected. **OS Recovery Image Version**. Display the version of the recovery image stored in the embedded secure storage device. This information is displayed only if an embedded secure storage device is installed. **OS Recovery Driver Version** Display the version of the recovery driver stored in the embedded secure storage device. This information is displayed only if an embedded secure storage device is installed.

Table 6-3 Computer Setup Advanced (for advanced users) (continued)

Option	Heading
System Options	**Configure Storage Controller for VMD** Enables VMD RAID Controller. Default is enabled. **Turbo-boost** (Intel products only) Allows Intel Turbo Boost Technology to improve performance when operation conditions allow. Default is enabled. **Force SATA Gen Speed** • Default • Gen1 • Gen2 • Gen3 (default) **PCIe ACS** Default is enabled. **1 TB Memory Cap** Default is Auto. **PCIe Training Reset** Default is disabld. **Hyperthreading** (Intel products only) Lets you control processor capability. Default is enabled. **Virtualization Technology (VTx)** (Intel only) Controls the virtualization features of the processor. Changing this setting requires turning the computer off and then back on. Default is disabled. **Virtualization Technology for Directed I/O (VTd)** (Intel only) • Controls virtualization DMA remapping features of the chipset. Changing this setting requires turning the computer off and then back on. Default is disabled. • Allows for secure logon using the Windows Hello feature. **DMA Protection** Enables DMA redirection using IOMMU for enhanced security. Default is enabled. NOTE: Requires that VTd is enabled. **Pre-boot DMA protection** Secures memory access through DMA to allowed regions prior to operating system startup. **Early PCIe Delay** Enables a configurable delay to add-in PCIe cards prior to PCIe training. Default is disabled. **Accelerate USB Enumeration** Lets you reduce the time of USB enumeration on specific USB devices. Default is disabled.

Table 6-3 Computer Setup Advanced (for advanced users) (continued)

Option	Heading
System Options	**NVMe Write Endurance Masking** Causes the computer to not report errors during boot if NVMe write endurance is exceeded. Default is disabled. **Reset Factory Defaults on Battery Loss** Lets you return settings to default values in the case of battery power loss. Default is Apply Default Settings. **Power Button Override** (disable/4 sec/15 sec/30 sec) Lets you enable and select the number of seconds you have to hold down the power button for it to force the system to turn off. Default is 4 sec. **USB Type-C Connector System Software Interface (UCSI)** (select products only) Allows UCSI to be exposed to the operating system (ACPI table). **HP Application Driver** Provides ACPI structure to enable HP common software application framework. The driver is provided in the latest HP support software that you can download from the web. NOTE: Device Manager shows an alert if this setting is enabled without the HP application driver installed. **Performance Control** (High Performance Mode/Performance Mode/Quite Mode) Lets you set a preference for higher performance or quieter acoustic noise via the BIOS F10 Setup Menu. • High Performance Mode significantly increases performance and acoustic noise for some configurations and workloads. The highest performance gain is with high core-count CPUs running demanding multithreaded workloads. • Performance Mode balances performance and acoustic noise for most configurations and workloads. • Quiet Mode limits noise emissions and may result in slightly lower performance on demanding workloads. Not recommended at ambient temperatures above 30° C/86° F. Default is Performance Mode.

Table 6-3 Computer Setup Advanced (for advanced users) (continued)

Option	Heading
Built-In Device Options	**Embedded LAN Controller** (select products only) Select to show the device in the operating system. Default is enabled. **Wake On LAN** Lets you either disable the Wake On LAN feature or configure where the computer boots, including the network or hard drive. Default is boot to network. **Dust Filter** (select products only) Default is disabled. **Dust Filter Reminder (Days)** (select products only) Default is 60. **VGA Boot Device** (models with discrete graphics) Selects the graphics controller to use as the primary VGA device during boot-up when there are multiple graphics devices. The firmware can use only one graphics device when booting up. **Audio Device** Select to show audio devices in the operating system, including integrated microphone, internal speakers, and headphone out. When selected, operating system visibility of each audio device is controlled independently. When this setting is cleared, all audio devices are hidden from the operating system. Individual audio device settings are also disabled. Default is enabled. **Microphone** Clear to disable the integrated microphone. This does not affect devices plugged into audio jacks. The disable and lock setting prevents other audio ports from being remapped to the microphone function in the operating system. Default is enabled. **Internal Speakers** (does not affect external speakers) Clear to disable the chassis speaker or speakers. This function is applicable to normal audio playback in the operating system and does not affect the error or warning beeps during POST. Default is enabled. **LAN/WLAN auto switching** Select to enable auto switching between a wired and wireless connection. Default is disabled. **Wake on WLAN** Select to enable wake on WLAN. Default is disabled. **M.2 USB/Bluetooth** Select to enable the M.2 controller. Default is enabled. **Increase Idle Fan Speed (%)** Increases the minimum fan speeds over the normal settings while still enabling normal control using the internal thermal sensors. **PCIe Idle Fan Tracking Mode** Default is disabled.

Table 6-3 Computer Setup Advanced (for advanced users) (continued)

Option	Heading
Port Options	**USB ports** (varies by model) Lets you enable specific USB ports. Default is enabled. **USB Legacy Port Charging** Lets you enable USB charging port capability when the computer is in hibernate or shutdown mode. Default is enabled. **USB Type-C Downstream Charging** Lets you enable USB charging port capability when the computer is in hibernate mode, is on, or is off. Default is enabled. **Media Card Reader/SD_RDR USB** Enables the media card reader connector (labeled SD_RDR) on a desktop. Default is enabled. **SATA** (varies by model) Lets you hide SATA ports from the operating system. Default is enabled (not hidden). **Serial Port** (varies by model) Lets you enable specific serial ports. Default is enabled. **Serial Port Voltage** (Retail Point-of-Sale models only; ports vary by model) Lets you configure powered serial port voltage selection on RPOS units that include this feature. Default is 0 Volts. • 0 Volts • 5 Volts • 12 Volts

Table 6-3 Computer Setup Advanced (for advanced users) (continued)

Option	Heading
Power Management Options	**Runtime Power Management** Allows certain operating systems to reduce processor voltage and frequency when the current software load does not require the full capabilities of the processor. Default is enabled. **Extended Idle Power States** Allows certain operating systems to decrease the processors power consumption when the processor is idle. Default is enabled. **S4/S5 Maximum Power Savings** Enabling this feature reduces the power of the system as much as possible in the S4 or S5 state. Power is removed from the wake up circuitry, the expansion slots, and any management features while in S4 or S5. Default is disabled. **SATA Power Management** Enables or disables SATA bus, device power management, or both. Default is enabled. **Hardware P-States** Default is enabled. **Energy/Performance Bias Control** • OS Controls EPB • BIOS Controls EPB (default) **BIOS Energy/Performance Bias** • Performance • Balanced Performance (default) • Balanced Power • Power **PCI Express Power Management** Enabling this option permits the PCI Express links to use Active Power State Management (ASPM) to enter lower power states while not in use. Default is enabled. **Unique Sleep State Blink Rates** This feature is designed to provide a visual indication of what Sleep state the system is in. Each Sleep state has a unique blink pattern. Default is disabled. NOTE: A normal shutdown goes to the S4 state for Windows 8 or later. • S0 (On) = solid white light. • S3 (Stand By) = 3 blinks at 1 Hz (50% duty cycle) followed by a pause of 2 seconds (white light), repeated cycles of 3 blinks and a pause. • S4 (Hibernation) = 4 blinks at 1 Hz (50% duty cycle) followed by a pause of 2 seconds (white light), repeated cycles of 4 blinks and a pause. • S5 (Soft Off) = Light is off.

Table 6-3 Computer Setup Advanced (for advanced users) (continued)

Option	Heading
Remote Management Options (Intel only)	**Intel Management Engine(ME)** Lets you enable the Intel Management Engine. Default is enabled. **Intel Active Management Technology (AMT)** Allows you to discover, repair, and protect networked computing devices. Default is disabled. **USB Key Provisioning Support** Enables AMT provisioning using a USB storage device. Default is disabled. **USB Redirection Support** USB redirection allows USB devices plugged into a client computer to be transparently redirected to the guest operating system. Default is enabled. **Unconfigure AMT on next boot**. Resets AMT configuration options on next boot. Default is Do Not Apply. **SOL Terminal Emulation Mode** SOL (serial-over-LAN) terminal emulation mode is only activated during remote AMT (Active Management Technology) redirection operations. The emulation options allow administrators to select which mode works best with their console. Default is ANSI. **Show Unconfigure ME Confirmation Prompt** Requires user confirmation when unconfiguring the Intel Management Engine. Default is enabled. **Verbose Boot Messages** Verbose boot shows additional logging information during startup, which is mainly for debugging if something goes wrong during bootup. Default is enabled. **Watchdog Timer** Allows you to set the amount of time for an operating system and BIOS watchdog alert to be sent if the timers are not deactivated. BIOS watchdog is deactivated by BIOS and would indicate that a halt occurred during execution if the alert is sent to the management console. An operating system alert is deactivated by the operating system image and would indicate that a hang occurred during its initialization. Default is enabled. • OS Watchdog Timer (min.). Default is 5 min. • BIOS Watchdog Timer (min.). Default is 5 min. **CIRA Timeout (min.)** CIRA is Customer Initiated Remote Assistance, an Intel service to help users employing Active Management Technology (AMT). Default is 1.

Table 6-3 Computer Setup Advanced (for advanced users) (continued)

Option	Heading
Slot Settings	**PCI Express (x16/x4/x1) slots** Lets you enable or disable PCIe slots. Default is enabled. **M.2 SSDs** Lets you enable or disable M.2 solid-state drive slots. Default is enabled. **M.2 WLAN/BT** Lets you enable or disable WLAN/BT slots. Default is enabled. **Option ROM Download** Lets you enable whether the ROM option can run on the device installed in this slot. **Limit PCIe Speed** (workstation models only) Lets you restrict the maximum speed of the PCI Express devices to previous generations. • Auto • Gen 1 (2.5 Gbps) • Gen 2 (5 Gbps) • Gen 3 (8 Gbps) • Gen 4 (16 Gbps) • Gen 5 (32 Gbps) **Bifurcation** • x8x8 • x4x4x4x4 Default is Auto. **Intel VROC NVMe RAID** Default is disabled. **Resizable BARs** Default is disabled.
Remote HP PC Hardware Diagnostics	**Settings** Sets the configuration for Remote HP PC Hardware Diagnostics, including the URLs used for download and upload and scheduled execution frequency. **Execute Remote HP PC Hardware Diagnostics** Select to immediately execute Remote HP PC Hardware Diagnostics based on the how settings are configured. Any unsaved BIOS settings will be lost.

7 POST error messages

This section lists the error codes, error messages, and the various indicator light and audible sequences that you may encounter during Power-On Self-Test (POST) or computer restart, the probable source of the problem, and steps you can take to resolve the error condition.

POST Message Disabled suppresses most system messages during POST, such as memory count and non-error text messages. If a POST error occurs, the screen will display the error message. To manually switch to the POST Messages Enabled mode during POST, press any key except f10, f11, or f12. The default mode is POST Message Disabled.

The POST mode selection determines the speed at which the computer loads the operating system and the extent to which it is tested.

Quick Boot is a fast startup process that does not run all of the system level tests, such as the memory test. Full Boot runs all of the ROM-based system tests and takes longer to complete.

You can enable Full Boot to run every 1 to 30 days on a regularly scheduled basis. To establish the schedule, reconfigure the computer to the Full Boot Every x Days mode, using Computer Setup.

NOTE: For more information about Computer Setup, see Computer Setup (F10) Utility on page 60.

POST numeric codes and text messages

This section identifies those POST errors that have numeric codes associated with them. The section also includes some text messages that you might encounter during POST.

NOTE: The computer beeps once after a POST text message is displayed on the screen.

Table 7-1 POST numeric codes and text messages

Control panel message	Description	Recommended action
002-Option ROM Checksum Error	System ROM or expansion board option ROM checksum.	1. Verify the correct ROM. 2. Flash the ROM if needed. 3. If an expansion board was recently added, remove it to see if the problem remains. 4. Clear CMOS. 5. If the message disappears, there might be a problem with the expansion card. 6. Replace the system board.
003-System Board Failure	DMA or timers.	1. Clear CMOS. 2. Replace the system board.

Table 7-1 POST numeric codes and text messages (continued)

Control panel message	Description	Recommended action
005-Real-Time Clock Power Loss	Invalid time or date in configuration memory. RTC (real-time clock) battery might need to be replaced.	Reset the date and time under Control Panel (Computer Setup can also be used). If the problem persists, replace the RTC battery. See Removal and replacement procedures on page 17 for instructions about installing a new battery.
008-Microcode Patch Error	Processor is not supported by the BIOS.	1. Upgrade BIOS to proper version. 2. Change the processor.
009-PMM Allocation Error during MEBx Download	Memory error during POST execution of the Management Engine (ME) BIOS Extensions option ROM.	1. Reboot the computer. 2. Unplug the power cord, reseat the memory modules, and reboot the computer. 3. If the memory configuration was recently changed, unplug the power cord, restore the original memory configuration, and reboot the computer. 4. If the error persists, replace the system board.
00A-Product Information Not Valid	The product information programmed into the system board is missing or invalid.	Use Computer Setup (F10) Utility on page 60 to update this information.
00B-MEBx Module did not checksum correctly	Memory error during POST execution of the Management Engine (ME) BIOS Extensions option ROM.	1. Reboot the computer. 2. Unplug the power cord, reseat the memory modules, and reboot the computer. 3. If the memory configuration was recently changed, unplug the power cord, restore the original memory configuration, and reboot the computer. 4. If the error persists, replace the system board.
00C-PMM Deallocation Error during MEBx Cleanup	Memory error during POST execution of the Management Engine (ME) BIOS Extensions option ROM.	1. Reboot the computer. 2. Unplug the power cord, reseat the memory modules, and reboot the computer. 3. If the memory configuration was recently changed, unplug the power cord, restore the original memory configuration, and reboot the computer. 4. If the error persists, replace the system board.

Table 7-1 POST numeric codes and text messages (continued)

Control panel message	Description	Recommended action
00D-Setup Error during MEBx Execution	MEBx selection or exit resulted in a setup failure.	1. Reboot the computer. 2. Unplug the power cord, reseat the memory modules, and reboot the computer. 3. If the memory configuration was recently changed, unplug the power cord, restore the original memory configuration, and reboot the computer. 4. If the error persists, replace the system board.
00E-Inventory Error during MEBx Execution	BIOS information passed to the MEBx resulted in a failure.	1. Reboot the computer. 2. If the error persists, update to the latest BIOS version. 3. If the error still persists, replace the system board.
00F-Interface Error during MEBx Execution	MEBx operation experienced a hardware error during communication with the ME.	1. Reboot the computer. 2. If the error persists, update to the latest BIOS version. 3. If the error still persists, replace the system board.
100-Front Audio Not Connected	Front audio cable has been detached or unseated from system board.	Reconnect or replace front audio cable.
2E1-MemorySize Error	Memory amount has changed since the last boot (memory added or removed).	The system memory size is different from the last startup. The most common reason is the removal of memory from the system board. Press the f1 key to save the memory changes.
2E2-Memory Error	Memory module configuration failed during boot-up.	1. Be sure that memory modules are correctly installed. 2. Verify proper memory module type. 3. Remove and replace the identified faulty memory modules. 4. If the error persists after replacing memory modules, replace the system board.
2E3-Incompatible Memory Module in Memory Socket(s) X, X, ...	A memory module in memory socket identified in the error message is missing critical SPD information, or is incompatible with the chipset.	1. Verify proper memory module type. 2. Try another memory socket. 3. Replace with a supported module.
2E4-DIMM Configuration Warning	Populated DIMM Configuration is not optimized.	Rearrange the DIMMs so that each channel has the same amount of memory.

Table 7-1 **POST numeric codes and text messages (continued)**

Control panel message	Description	Recommended action
2E5-ECC Memory Module Detected on Unsupported Platform	Recently added memory modules support ECC memory error correction.	1. If additional memory was recently added, remove it to see if the problem remains. 2. Check product documentation for memory support information.
2E6-Memory Not Configured Correctly for Proper MEBx Execution	DIMM1 is not installed.	Be sure that a memory module is in the DIMM1 socket and that it is properly seated.
300-Configuration Change Warning	A change in storage configuration has been detected (see the **Boot Options** menu in BIOS Setup to enable this feature). Either the installed hardware has changed, storage or firmware mode might have been changed, or a storage device might have failed to respond.	If no changes were made before this warning, check that the drives are connected properly to power cables and system board. User Diagnostics (f2 during boot-up) might help identify any problem with specific devices.
301-Hard Disk 1: SMART Hard Drive Detects Imminent Failure	Hard drive will soon fail. (Some hard drives have a hard drive firmware patch that will fix an erroneous error message.)	1. Determine whether hard drive is giving correct error message. Run the Drive Protection System test under using F2 Diagnostics when booting the computer. 2. Apply hard drive firmware patch if applicable. (Available at http://www.hp.com/support.) 3. Back up contents and replace hard drive.
302-Hard Disk 2: SMART Hard Drive Detects Imminent Failure	Hard drive will soon fail. (Some hard drives have a hard drive firmware patch that will fix an erroneous error message.)	1. Determine whether hard drive is giving correct error message. Run the Drive Protection System test under using F2 Diagnostics when booting the computer. 2. Apply hard drive firmware patch if applicable. (Available at http://www.hp.com/support.) 3. Back up contents and replace hard drive.
309 - 30C: Hard Disk 3-6: SMART Hard Drive Detects Imminent Failure	Hard drive will soon fail. (Some hard drives have a hard drive firmware patch that will fix an erroneous error message.)	1. Determine whether hard drive is giving correct error message. Run the Drive Protection System test under using F2 Diagnostics when booting the computer. 2. Apply hard drive firmware patch if applicable. (Available at http://www.hp.com/support.) 3. Back up contents and replace hard drive.
3F0-Boot Device Not Found	Boot device not found.	Insert boot device or load operating system.

Table 7-1 POST numeric codes and text messages (continued)

Control panel message	Description	Recommended action
3F1–Hard Disk 1 Error	Hard disk 1 error.	1. Check and/or replace cables. 2. Clear CMOS. 3. Replace the hard disk drive.
3F2–Hard Disk 2 Error	Hard disk 2 error.	1. Check and/or replace cables. 2. Clear CMOS. 3. Replace the hard disk drive.
400-Serial Port A Address Conflict Detected	Both external and internal serial ports are assigned to the same resources.	1. Remove any serial port expansion cards. 2. Clear CMOS. 3. Reconfigure card resources and/or run Computer Setup or Windows utilities.
401-Serial Port B Address Conflict Detected	Both external and internal serial ports are assigned to the same resources.	1. Remove any serial port expansion cards. 2. Clear CMOS. 3. Reconfigure card resources and/or run Computer Setup or Windows utilities.
402-Serial Port C Address Conflict Detected	Both external and internal serial ports are assigned to the same resources.	1. Remove any serial port expansion cards. 2. Clear CMOS. 3. Reconfigure card resources and/or run Computer Setup or Windows utilities.
403-Serial Port D Address Conflict Detected	Both external and internal serial ports are assigned to the same resources.	1. Remove any serial port expansion cards. 2. Clear CMOS. 3. Reconfigure card resources and/or run Computer Setup or Windows utilities.
419-Out of Memory Space for Option ROMs	Recently added PCI expansion card contains an option ROM too large to download during POST.	If a PCI expansion card was recently added, remove it to see if the problem remains.
41A-Front USB1/USB2 Not Connected	Front USB cable has been detached or unseated from system board.	Reconnect or replace front USB cable.
41B-Device in PCI Express Slot Failed To Initialize	There is an incompatibility or problem with a PCIe device and the system or PCIe link could not be configured to a valid bus width or speed.	Try rebooting the system. If the error reoccurs, the device might not work with this system
43A-USB Type-C I2C Not Connected	Cable is required between I2C on card and USB-C® on the system board.	Install cable between I2C on card and USB-C on the system board.
43B-More Than One USB type-C Cards Are Installed	More than one USB Type-C card is installed.	Remove USB Type-C card so only one is installed.

Table 7-1 POST numeric codes and text messages (continued)

Control panel message	Description	Recommended action
500–BIOS Recovery	A system BIOS recovery has occurred.	Not applicable.
70x-Wireless Mode Not Supported	The system has detected a wireless module installed in the system that is not supported and has been disabled.	Replace with a supported module.
800-Keyboard Error	Keyboard failure.	1. Reconnect keyboard with computer turned off. 2. Check connector for bent or missing pins. 3. Be sure that none of the keys are pressed. 4. Replace keyboard.
801-Keyboard or System Unit Error	Keyboard failure.	1. Reconnect the keyboard with computer turned off. 2. Be sure that none of the keys are pressed. 3. Replace the keyboard. 4. Replace the system board.
900-CPU Fan Not Detected	CPU fan is not connected or might have malfunctioned.	1. Reseat fan. 2. Reseat fan cable. 3. Replace fan.
901-Chassis, Rear Chassis, Front Chassis, or PCIe blower Fan not Detected	Fan is not connected or might have malfunctioned.	1. Reseat fan. 2. Reseat fan cable. 3. Replace fan.
904-SATA Cabling Error	One or more SATA devices are improperly attached. For optimal performance, the SATA0, SATA1, and SATA2 ports should be used for hard drives before other ports.	Be sure that SATA connectors are used in ascending order. For one device, use SATA0. For two devices, use SATA0 and SATA1. For three devices, use SATA0, SATA1, and SATA2.
90B-Fan Failure	The system has detected that a cooling fan is not operating correctly.	1. Reseat fan. 2. Reseat fan cable. 3. Replace fan.
90D-System Temperature	Thermal shutdown occurred. The system BIOS has detected that your machine was previously shut down to avoid overheating. Overheating might occur if the cooling vents are blocked or the operating temperature exceeds the system specifications. The machine should return to normal operation once the situation is resolved.	Be sure system has proper airflow.
90E-Power Supply Fan Not detected	Power supply fan is not connected or might have malfunctioned.	1. Reseat power supply fan. 2. Reseat fan cable. 3. Replace power supply fan.

Table 7-1 POST numeric codes and text messages (continued)

Control panel message	Description	Recommended action
910–Filter Warning	Airflow filter is dirty.	Replace the airflow filter.
911–Graphics Module Fan Not Detected	Graphics card fan is not connected or might have malfunctioned.	1. Reseat graphics card fan. 2. Reseat fan cable. 3. Replace graphics card fan.
912–Incorrect CPU cooler installed for this configuration	The processor cooler/heat sink does not match processor power requirement.	Replace the cooler/heat sink to match the processor power requirement.

Interpreting POST diagnostic front panel lights and audible codes

This section identifies the front panel light codes as well as the audible codes that can occur before or during POST that might not have an error code or text message associated with them.

⚠ CAUTION: When the computer is plugged into an AC power source, voltage is always applied to the system board. To reduce the risk of personal injury from electrical shock and/or hot surfaces, be sure to disconnect the power cord from the AC outlet and allow the internal system components to cool before touching.

During the system validation phase that occurs at system startup, the BIOS validates the functionality of the following subsystems and conditions:

- AC adapter
- System board power
- Processor failure
- BIOS corruption
- Memory failure
- Graphics failure
- System board failure
- BIOS authentication failure

If an error is detected, specific patterns of long and short blinks, accompanied by long and short beeps (where applicable) are used to identify the error. These patterns make up a two-part code:

- Major: The category of the error
- Minor: The specific error within the category

NOTE: Single beep and blink codes are not used.

Table 7-2 Beep pattern error identification

Number of long beeps/blinks	Error category
1	Not used
2	BIOS
3	Hardware
4	Thermal
5	System board

Patterns of blink/beep codes are determined by using the following parameters:

- 1 second pause occurs after the last major blink.
- 2 second pause occurs after the last minor blink.
- Beep error code sequences occur for the first five iterations of the pattern and then stop.
- Blink error code sequences continue until the computer is unplugged or the power button is pressed.

NOTE: Not all diagnostic lights and audible codes are available on all models.

The red LED blinks to represent the major error category (long blinks). The white LED blinks to represent the minor error category (short blinks). For example, '3.5' indicates 3 long red blinks and 5 short white blinks to communicate the processor is not detected.

Table 7-3 Interpreting POST diagnostic front panel lights and audible codes

Category	Major/minor code	Description
BIOS	2.2	The main area (DXE) of BIOS has become corrupted, and there is no recovery binary image available.
	2.3	The embedded controller policy requires the user to enter a key sequence.
	2.4	The embedded controller is checking or recovering the boot block.
Hardware	3.2	The embedded controller has timed out waiting for BIOS to return from memory initialization.
	3.3	The embedded controller has timed out waiting for BIOS to return from graphics initialization.
	3.4	The system board displays a power failure (crowbar).*
	3.5	The processor is not detected.*
	3.6	The processor does not support an enabled feature.
	3.7	The access panel/top cover has been opened since the last computer start.
Thermal	4.2	A processor over temperature condition has been detected.*
	4.3	An ambient temperature over temperature condition has been detected.
	4.4	An MXM over temperature condition has been detected.

Table 7-3 Interpreting POST diagnostic front panel lights and audible codes (continued)

Category	Major/minor code	Description
System board	5.2	The embedded controller cannot find valid firmware.
	5.3	The embedded controller has timed out waiting for the BIOS.
	5.4	The embedded controller has timed out waiting for BIOS to return from system board initialization.
	5.5	The embedded controller rebooted the system after a possible lockup condition had been detected through the use of a System Health Timer, Automated System Recovery Timer, or other mechanism.

* Indicates a hardware-triggered event; BIOS controls all other events.

8 Password security and resetting CMOS

This computer supports two security password features that you can establish through the Computer Setup Utilities menu: administrator password and power-on password.

When you establish only an administrator password, any user can access all the information on the computer except Computer Setup. When you establish only a power-on password, the power-on password is required to access Computer Setup and any other information on the computer. When you establish both passwords, only the administrator password will give you access to Computer Setup.

When both passwords are set, you can use the administrator password in place of the power-on password as an override to log in to the computer. This feature is useful for a network administrator.

IMPORTANT: Back up the BIOS settings or save them as custom defaults in case you need them later. You can back up in Computer Setup or with the BiosConfigUtility tool available from www.hp.com. See Computer Setup (F10) Utility on page 60 for information about backing up the BIOS settings.

Changing a setup or power-on password

Use this procedure to change a password.

To change the power-on or setup password, complete the following steps:

1. Turn on or restart the computer.

   To change the setup password, go to step 2.

   To change the power-on password, go to step 3.

2. To change the setup password, as soon as the computer turns on:

   - Press esc while the “Press the ESC key for Startup Menu” message is displayed.

   - Press f10 to enter Computer Setup.

3. When the key icon appears, type your current password, a slash (/) or alternate delimiter character, your new password, another slash (/) or alternate delimiter character, and your new password again as shown:

   current password/new password/new password

   NOTE: Type the new password carefully because the characters do not appear on the screen.

4. Press enter.

The new password will take effect the next time the computer is restarted.

Deleting a setup or power-on password

Use this procedure to delete a password.

To delete the power-on or setup password, complete the following steps:

1. Turn on or restart the computer.

   To delete the Setup password, go to step 2.

   To delete the Power-on password, go to step 3.

2. To delete the Setup password, as soon as the computer turns on:

   - Press esc while the “Press the ESC key for Startup Menu” message is displayed.

   - Press f10 to enter Computer Setup.

3. When the key icon appears, type your current password, a slash (/) or alternate delimiter character, your new password, another slash (/) or alternate delimiter character, and your new password again as shown:

   current password/new password/new password

4. Press enter.

9 Backing up, restoring, and recovering

You can use Windows tools or HP software to back up your information, create a restore point, reset your computer, create recovery media, or restore your computer to its factory state. Performing these standard procedures can return your computer to a working state faster.

IMPORTANT: If you are performing recovery procedures on a tablet, the tablet battery must be at least 70% charged before you start the recovery process.

IMPORTANT: For a tablet with a detachable keyboard, connect the tablet to the keyboard base before beginning any recovery process.

Backing up information and creating recovery media

These methods of creating recovery media and backups are available on select products only.

Using Windows tools for backing up

HP recommends that you back up your information immediately after initial setup. You can do this task either using Windows Backup locally with an external USB drive or using online tools.

IMPORTANT: Windows is the only option that allows you to back up your personal information. Schedule regular backups to avoid information loss.

NOTE: If computer storage is 32 GB or less, Microsoft® System Restore is disabled by default.

Using the HP Cloud Recovery Download Tool to create recovery media (select products only)

You can use the HP Cloud Recovery Download Tool to create HP Recovery media on a bootable USB flash drive.

For details:

- Go to http://www.hp.com, search for HP Cloud Recovery, and then select the result that matches the type of computer that you have.

NOTE: If you cannot create recovery media yourself, contact support to obtain recovery discs. Go to http://www.hp.com/support, select your country or region, and then follow the on-screen instructions.

IMPORTANT: HP recommends that you follow the Restoring and recovery methods on page 93 to restore your computer before you obtain and use the HP recovery discs. Using a recent backup can return your machine to a working state sooner than using the HP recovery discs. After the system is restored, reinstalling all the operating system software released since your initial purchase can be a lengthy process.

Restoring and recovering your system

You have several tools available to recover your system both within and outside of Windows if the desktop cannot load.

HP recommends that you attempt to restore your system using the Restoring and recovery methods on page 93.

Creating a system restore

System Restore is available in Windows. The System Restore software can automatically or manually create restore points, or snapshots, of the system files and settings on the computer at a particular point.

When you use System Restore, it returns your computer to its state at the time you made the restore point. Your personal files and documents should not be affected.

Restoring and recovery methods

After you run the first method, test to see whether the issue still exists before you proceed to the next method, which might now be unnecessary.

1. Run a Microsoft System Restore.
2. Run Reset this PC.

   NOTE: The options **Remove everything** and then **Fully clean the drive** can take several hours to complete and leave no information on your computer. It is the safest way to reset your computer before you recycle it.

3. Recover using HP Recovery media. For more information, see Recovering using HP Recovery media on page 93.

For more information about the first two methods, see the Get Help app:

- Select the **Start** button, select **All apps**, select the **Get Help** app, and then enter the task you want to perform.

NOTE: You must be connected to the internet to access the Get Help app.

Recovering using HP Recovery media

You can use HP Recovery media to recover the operating system and drivers that were installed at the factory. On select products, you can create recovery media on a bootable USB flash drive using the HP Cloud Recovery Download Tool.

For details, see Using the HP Cloud Recovery Download Tool to create recovery media (select products only) on page 92.

NOTE: If you cannot create recovery media yourself, contact support to obtain recovery discs. Go to http://www.hp.com/support, select your country or region, and then follow the on-screen instructions.

To recover your system:

- Insert the HP Recovery media, and then restart the computer.

NOTE: HP recommends that you follow the Restoring and recovery methods on page 93 to restore your computer before you obtain and use the HP recovery discs. Using a recent backup can return your machine to a working state sooner than using the HP recovery discs. After the system is restored, reinstalling all the operating system software released since your initial purchase can be a lengthy process.

Changing the computer boot order

If your computer does not restart using the HP Recovery media, you can change the computer boot order, which is the order of devices listed in BIOS for startup information. You can select an optical drive or a USB flash drive, depending on the location of your HP Recovery media.

IMPORTANT: For a tablet with a detachable keyboard, connect the tablet to the keyboard base before beginning these steps.

To change the boot order:

1. Insert the HP Recovery media.
2. Access the system **Startup** menu.
   - For computers or tablets with keyboards attached, turn on or restart the computer or tablet, quickly press esc, and then press f9 for boot options.
   - For tablets without keyboards, turn on or restart the tablet, quickly press and hold the volume up button, and then select **f9**.

     – or –

     Turn on or restart the tablet, quickly press and hold the volume down button, and then select **f9**.
3. Select the optical drive or USB flash drive from which you want to boot, and then follow the on-screen instructions.

Using HP Sure Recover (select products only)

Select computer models are configured with HP Sure Recover, a PC operating system (OS) recovery solution built into the hardware and software. HP Sure Recover can fully restore the HP OS image without installed recovery software.

Using HP Sure Recover, an administrator or user can restore the system and install:

- Latest version of the operating system
- Platform-specific device drivers
- Software applications, in the case of a custom image

To access the latest documentation for HP Sure Recover, go to http://www.hp.com/support. Follow the on-screen instructions to find your product and locate your documentation.

10 Using HP PC Hardware Diagnostics

You can use the HP PC Hardware Diagnostics utility to determine whether your computer hardware is running properly. The three versions are HP PC Hardware Diagnostics Windows, HP PC Hardware Diagnostics UEFI (Unified Extensible Firmware Interface), and (for select products only) Remote HP PC Hardware Diagnostics UEFI, a firmware feature.

Using HP PC Hardware Diagnostics Windows (select products only)

HP PC Hardware Diagnostics Windows is a Windows-based utility that allows you to run diagnostic tests to determine whether the computer hardware is functioning properly. The tool runs within the Windows operating system to diagnose hardware failures.

If HP PC Hardware Diagnostics Windows is not installed on your computer, you must download and install it. To download HP PC Hardware Diagnostics Windows, see Downloading HP PC Hardware Diagnostics Windows on page 96.

Using an HP PC Hardware Diagnostics Windows hardware failure ID code

When HP PC Hardware Diagnostics Windows detects a failure that requires hardware replacement, a 24-digit failure ID code is generated for select component tests. For interactive tests, such as keyboard, mouse, or audio and video palette, you must perform troubleshooting steps before you can receive a failure ID.

- You have several options after you receive a failure ID:
  - Select **Next** to open the Event Automation Service (EAS) page, where you can log the case.
  - Scan the QR code with your mobile device, which takes you to the EAS page, where you can log the case.
  - Select the box next to the 24-digit failure ID to copy your failure code and send it to support.

Accessing HP PC Hardware Diagnostics Windows

After HP PC Hardware Diagnostics Windows is installed, you can access it from HP Support Assistant or the Start menu.

Accessing HP PC Hardware Diagnostics Windows from HP Support Assistant

After HP PC Hardware Diagnostics Windows is installed, follow these steps to access it from HP Support Assistant:

1. Complete one of the following tasks:
   - Select the **Search** icon in the taskbar, type `support` in the search box, and then select the **HP Support Assistant** app.
   - Select the question mark icon in the taskbar.
2. Select **Fixes & Diagnostics**.

3. Select **Run hardware diagnostics**, and then select **Launch**.
4. When the tool opens, select the type of diagnostic test that you want to run, and then follow the on-screen instructions.

NOTE: To stop a diagnostic test, select **Cancel**.

Accessing HP PC Hardware Diagnostics Windows from the Start menu (select products only)

After HP PC Hardware Diagnostics Windows is installed, follow these steps to access it from the Start menu:

1. Select the **Start** button, and then select **All apps**.
2. Select **HP PC Hardware Diagnostics Windows**.
3. When the tool opens, select the type of diagnostic test that you want to run, and then follow the on-screen instructions.

NOTE: To stop a diagnostic test, select **Cancel**.

Downloading HP PC Hardware Diagnostics Windows

The HP PC Hardware Diagnostics Windows downloading instructions are provided in English only. You must use a Windows computer to download this tool because only .exe files are provided.

Downloading the latest HP PC Hardware Diagnostics Windows version from HP

To download HP PC Hardware Diagnostics Windows from HP, follow these steps:

1. Go to http://www.hp.com/go/techcenter/pcdiags. The HP PC Diagnostics home page is displayed.
2. Select **Download HP Diagnostics Windows**, and then select the specific Windows diagnostics version to download to your computer or a USB flash drive.

The tool downloads to the selected location.

Downloading the HP PC Hardware Diagnostics Windows from the Microsoft Store

You can download the HP PC Hardware Diagnostics Windows from the Microsoft Store:

1. Select the Microsoft Store app on your desktop or select the **Search** icon in the taskbar, and then type `Microsoft Store` in the search box.
2. Type `HP PC Hardware Diagnostics Windows` in the **Microsoft Store** search box.
3. Follow the on-screen directions.

The tool downloads to the selected location.

Downloading HP Hardware Diagnostics Windows by product name or number (select products only)

You can download HP PC Hardware Diagnostics Windows by product name or number.

NOTE: For some products, you might have to download the software to a USB flash drive by using the product name or number.

1. Go to http://www.hp.com/support.
2. Select **Software and Drivers**, select your type of product, and then enter the product name or number in the search box that is displayed.
3. In the **Diagnostics** section, select **Download**, and then follow the on-screen instructions to select the specific Windows diagnostics version to be downloaded to your computer or USB flash drive.

The tool downloads to the selected location.

Installing HP PC Hardware Diagnostics Windows

To install HP PC Hardware Diagnostics Windows, navigate to the folder on your computer or the USB flash drive where the .exe file downloaded, double-click the .exe file, and then follow the on-screen instructions.

Using HP PC Hardware Diagnostics UEFI

HP PC Hardware Diagnostics Unified Extensible Firmware Interface (UEFI) allows you to run diagnostic tests to determine whether the computer hardware is functioning properly. The tool runs outside the operating system so that it can isolate hardware failures from issues that are caused by the operating system or other software components.

NOTE: For some products, you must use a Windows computer and a USB flash drive to download and create the HP UEFI support environment because only .exe files are provided. For more information, see Downloading HP PC Hardware Diagnostics UEFI to a USB flash drive on page 98.

If your PC does not start in Windows, you can use HP PC Hardware Diagnostics UEFI to diagnose hardware issues.

Using an HP PC Hardware Diagnostics UEFI hardware failure ID code

When HP PC Hardware Diagnostics UEFI detects a failure that requires hardware replacement, a 24-digit failure ID code is generated.

For assistance in solving the problem, complete one of these tasks:

- Select **Contact HP**, accept the HP privacy disclaimer, and then use a mobile device to scan the failure ID code that appears on the next screen. The HP Customer Support - Service Center page appears with your failure ID and product number automatically filled in. Follow the on-screen instructions.
- Contact support, and provide the failure ID code.

Starting HP PC Hardware Diagnostics UEFI

To start HP PC Hardware Diagnostics UEFI, follow this procedure.

1. Turn on or restart the computer, and quickly press esc.
2. Press f2.

   The BIOS searches three places for the diagnostic tools, in the following order:

a. Connected USB flash drive

NOTE: To download the HP PC Hardware Diagnostics UEFI tool to a USB flash drive, see Downloading the latest HP PC Hardware Diagnostics UEFI version on page 98.

b. Hard drive

c. BIOS

3. When the diagnostic tool opens, select the type of diagnostic test that you want to run, and then follow the on-screen instructions.

Starting HP PC Hardware Diagnostics UEFI through HP Hotkey Support software (select products only)

To start HP PC Hardware Diagnostics UEFI through HP Hotkey Support software, follow this procedure.

1. From the **Start** menu, open the HP System Information Application or enter Fn+Esc.
2. In HP System Information screen, select **Run System Diagnostics**, select **Yes** to run the application, and then select **Restart**.

IMPORTANT: To prevent loss of data, save your work in all open apps before restarting your computer.

NOTE: When the restart is complete, the computer will boot to HP PC Hardware Diagnostics UEFI Application. Proceed with the troubleshooting tests.

Downloading HP PC Hardware Diagnostics UEFI to a USB flash drive

Downloading HP PC Hardware Diagnostics UEFI to a USB flash drive can be useful in some situations.

- HP PC Hardware Diagnostics UEFI is not included in the preinstallation image.
- HP PC Hardware Diagnostics UEFI is not included in the HP Tool partition.
- The hard drive is damaged.

NOTE: The HP PC Hardware Diagnostics UEFI downloading instructions are provided in English only, and you must use a Windows computer to download and create the HP UEFI support environment because only .exe files are provided.

Downloading the latest HP PC Hardware Diagnostics UEFI version

To download the latest HP PC Hardware Diagnostics UEFI version to a USB flash drive, follow this procedure:

1. Go to http://www.hp.com/go/techcenter/pcdiags. The HP PC Diagnostics home page is displayed.
2. Select **Download HP Diagnostics UEFI**, and then select **Run**.

Downloading HP PC Hardware Diagnostics UEFI by product name or number (select products only)

You can download HP PC Hardware Diagnostics UEFI by product name or number (select products only) to a USB flash drive.

NOTE: For some products, you might have to download the software to a USB flash drive by using the product name or number.

1. Go to http://www.hp.com/support.
2. Enter the product name or number, select your computer, and then select your operating system.
3. In the **Diagnostics** section, follow the on-screen instructions to select and download the specific UEFI Diagnostics version for your computer.

Using Remote HP PC Hardware Diagnostics UEFI settings (select products only)

Remote HP PC Hardware Diagnostics UEFI is a firmware (BIOS) feature that downloads HP PC Hardware Diagnostics UEFI to your computer. It can then run the diagnostics on your computer, and it might upload results to a preconfigured server.

For more information about Remote HP PC Hardware Diagnostics UEFI, go to http://www.hp.com/go/techcenter/pcdiags, and then select **Find out more**.

Downloading Remote HP PC Hardware Diagnostics UEFI

HP Remote PC Hardware Diagnostics UEFI is also available as a SoftPaq that you can download to a server.

Downloading the latest Remote HP PC Hardware Diagnostics UEFI version

You can download the latest HP PC Hardware Diagnostics UEFI version to a USB flash drive.

1. Go to http://www.hp.com/go/techcenter/pcdiags. The HP PC Diagnostics home page is displayed.
2. Select **Download Remote Diagnostics**, and then select **Run**.

Downloading Remote HP PC Hardware Diagnostics UEFI by product name or number

You can download HP Remote PC Hardware Diagnostics UEFI by product name or number.

NOTE: For some products, you might have to download the software by using the product name or number.

1. Go to http://www.hp.com/support.
2. Select **Software and Drivers**, select your type of product, enter the product name or number in the search box that is displayed, select your computer, and then select your operating system.
3. In the **Diagnostics** section, follow the on-screen instructions to select and download the **Remote UEFI** version for the product.

Customizing Remote HP PC Hardware Diagnostics UEFI settings

Using the Remote HP PC Hardware Diagnostics setting in Computer Setup (BIOS), you can perform several customizations.

- Set a schedule for running diagnostics unattended. You can also start diagnostics immediately in interactive mode by selecting **Execute Remote HP PC Hardware Diagnostics**.

- Set the location for downloading the diagnostic tools. This feature provides access to the tools from the HP website or from a server that has been preconfigured for use. Your computer does not require the traditional local storage (such as a hard drive or USB flash drive) to run remote diagnostics.
- Set a location for storing the test results. You can also set the user name and password that you use for uploads.
- Display status information about the diagnostics run previously.

To customize Remote HP PC Hardware Diagnostics UEFI settings, follow these steps:

1. Turn on or restart the computer, and when the HP logo appears, press f10 to enter Computer Setup.
2. Select **Advanced**, and then select **Settings**.
3. Make your customization selections.
4. Select **Exit**, then select **Save Changes and Exit** to save your settings.

Your changes take effect when the computer restarts.

11 Statement of memory volatility

For general information regarding nonvolatile memory in HP business computers, and to restore nonvolatile memory that can contain personal data after the system has been turned off and the hard drive has been removed, use these instructions.

HP business computer products that use Intel®-based or AMD®-based system boards contain volatile DDR memory. The amount of nonvolatile memory present in the system depends upon the system configuration. Intel-based and AMD-based system boards contain nonvolatile memory subcomponents as originally shipped from HP, with the following assumptions:

- No subsequent modifications were made to the system.
- No applications, features, or functionality were added to or installed on the system.

Following system shutdown and removal of all power sources from an HP business computer system, personal data can remain on volatile system memory (DIMMs) for a finite period of time and also remains in nonvolatile memory. Use the following steps to remove personal data from the computer, including the nonvolatile memory found in Intel-based and AMD-based system boards.

NOTE: If your tablet has a keyboard base, connect to the keyboard base before beginning steps in this chapter.

Current BIOS steps

Use these instructions to restore nonvolatile memory.

1. Follow these steps to restore the nonvolatile memory that can contain personal data. Restoring or reprogramming nonvolatile memory that does not store personal data is neither necessary nor recommended.

   a. Turn on or restart the computer, and then quickly press esc.

   NOTE: If the system has a BIOS administrator password, type the password at the prompt.

   b. Select **Main**, select **Apply Factory Defaults and Exit**, and then select **Yes** to load defaults. The computer restarts.

   c. During the restart, press esc while the "Press the ESC key for Startup Menu" message is displayed at the bottom of the screen.

   NOTE: If the system has a BIOS administrator password, type the password at the prompt.

   d. Select the **Security** menu, select **Restore Security Settings to Factory Defaults**, and then select **Yes** to restore security level defaults. The computer restarts.

   e. During the restart, press esc while the "Press the ESC key for Startup Menu" message is displayed at the bottom of the screen.

   NOTE: If the system has a BIOS administrator password, type the password at the prompt.

f. If an asset or ownership tag is set, select the **Security** menu and scroll down to the **Utilities** menu. Select **System IDs**, and then select **Asset Tracking Number**. Clear the tag, and then make the selection to return to the prior menu.

g. If a DriveLock password is set, select the **Security** menu, and scroll down to **Hard Drive Utilities** under the **Utilities** menu. Select **Hard Drive Utilities**, select **DriveLock**, and then clear the check box for **DriveLock password on restart**. Select **OK** to proceed.

h. Select the **Main** menu, and then select **Reset BIOS Security to factory default**. Select **Yes** at the warning message. The computer restarts.

i. During the restart, press esc while the "Press the ESC key for Startup Menu" message is displayed at the bottom of the screen.

NOTE: If the system has a BIOS administrator password, type the password at the prompt.

j. Select the **Main** menu, select **Apply Factory Defaults and Exit**, select **Yes** to save changes and exit, and then select **Shutdown**.

k. Restart the system. If the system has a Trusted Platform Module (TPM), fingerprint reader, or both, one or two prompts will appear—one to clear the TPM and the other to Reset Fingerprint Sensor. Press or tap f1 to accept or f2 to reject.

l. Remove all power and system batteries for at least 24 hours.

2. Complete one of the following:

- Remove and retain the storage drive.

  – or –

- Clear the drive contents by using a third-party utility designed to erase data from an SSD.

  – or –

- Clear the contents of the drive by using the following BIOS Setup Secure Erase command option steps:

NOTE: If you clear data using Secure Erase, you cannot recover it.

a. Turn on or restart the computer, and then quickly press esc.

b. Select the **Security** menu and scroll down to the esc menu.

c. Select **Hard Drive Utilities**.

d. Under **Utilities**, select **Secure Erase**, select the hard drive storing the data you want to clear, and then follow the on-screen instructions to continue.

   – or –

   Clear the contents of the drive using the following Disk Sanitizer commands steps:

   i. Turn on or restart the computer, and then quickly press esc.

   ii. Select the **Security** menu and scroll down to the **Utilities** menu.

   iii. Select **Hard Drive Utilities**.

iv. Under **Utilities**, select **Disk Sanitizer**, select the hard drive with the data that you want to clear, and then follow the on-screen instructions to continue.

NOTE: The amount of time it takes for Disk Sanitizer to run can take several hours. Plug the computer into an AC outlet before starting.

Nonvolatile memory usage

Use this table to troubleshooting nonvolatile memory usage.

Table 11-1 Troubleshooting steps for nonvolatile memory usage

Nonvolatile memory type	Amount (Size)	Does this memory store customer data?	Does this memory retain data when power is removed?	What is the purpose of this memory?	How is data entered into this memory?	How is this memory write-protected?
HP Sure Start flash (select models only)	32 MB	No	Yes	Provides protected backup of critical System BIOS code, EC firmware, and critical computer configuration data for select platforms that support HP Sure Start. For more information, see Using HP Sure Start (select products only) on page 106.	Data cannot be written to this device via the host processor. The content is managed solely by the HP Sure Start Embedded Controller.	This memory is protected by the HP Sure Start Embedded Controller.
Real Time Clock (RTC) battery backed-up CMOS configuration memory	256 bytes	No	Yes	Stores system date and time and noncritical data.	RTC battery backed-up CMOS is programmed using Computer Setup (BIOS), or by changing the Windows date and time.	This memory is not write protected.
Controller (NIC) EEPROM	64 KB (not customer accessible)	No	Yes	Stores NIC configuration and NIC firmware.	NIC EEPROM is programmed using a utility from the NIC vendor that can be run from DOS.	A utility must be used to write data to this memory and is available from the NIC vendor. Writing data to this ROM in an inappropriate manner will render the NIC non-functional.

Table 11-1 Troubleshooting steps for nonvolatile memory usage (continued)

Nonvolatile memory type	Amount (Size)	Does this memory store customer data?	Does this memory retain data when power is removed?	What is the purpose of this memory?	How is data entered into this memory?	How is this memory write-protected?
DIMM Serial Presence Detect (SPD) configuration data	256 bytes per memory module, 128 bytes programmable (not customer accessible)	No	Yes	Stores memory module information.	DIMM SPD is programmed by the memory vendor.	Data cannot be written to this memory when the module is installed in a computer. The specific write-protection method varies by memory vendor.
System BIOS	32 MB	Yes	Yes	Stores system BIOS code and computer configuration data.	System BIOS code is programmed at the factory. Code is updated when the system BIOS is updated. Configuration data and settings are entered using the Computer Setup (BIOS) or a custom utility.	NOTE: Writing data to this ROM in an inappropriate manner can render the computer non-functional. A utility must be used for writing data to this memory and is available on the HP website; go to http://www.hp.com/support. Select **Find your product**, and then follow the on-screen instructions.
Intel Management Engine Firmware (present only in select Elite or Z models. For more information, go to HP Support. Select **Identify your product for manuals and specific product information**, and then follow the on-screen instructions.)	1.5 MB or 7 MB	Yes	Yes	Stores Management Engine Code, Settings, Provisioning Data and iAMT third-party data store.	Management Engine Code is programmed at the factory. Code is updated via Intel secure firmware update utility. Unique Provisioning Data can be entered at the factory or by an administrator using the Management Engine (MEBx) setup utility. The third-party data store contents can be populated by a remote management console or local applications that have been registered by an administrator to have access to the space.	The Intel chipset is configured to enforce hardware protection to block all direct read-write access to this area. An Intel utility must be used for updating the firmware. Only firmware updates digitally signed by Intel can be applied using this utility.
Bluetooth® flash (select products only)	2 megabits	No	Yes	Stores Bluetooth configuration and firmware.	Bluetooth flash is programmed at the factory. Tools for writing data to this memory are not publicly available but can be obtained from the silicon vendor.	A utility must be used for writing data to this memory and is made available through newer versions of the driver whenever the flash requires an upgrade.

Table 11-1 Troubleshooting steps for nonvolatile memory usage (continued)

Nonvolatile memory type	Amount (Size)	Does this memory store customer data?	Does this memory retain data when power is removed?	What is the purpose of this memory?	How is data entered into this memory?	How is this memory write-protected?
802.11 WLAN EEPROM	4 kilobits to 8 kilobits	No	Yes	Stores configuration and calibration data.	802.11 WLAN EEPROM is programmed at the factory. Tools for writing data to this memory are not made public.	A utility must be used for writing data to this memory and is typically not made available to the public unless a firmware upgrade is necessary to address a unique issue.

Questions and answers

Use this section to answer your questions about nonvolatile memory.

1. **How can the BIOS settings be restored (returned to factory settings)?**

IMPORTANT: The restore defaults feature does not securely erase any information on your hard drive. See question and answer 6 for steps to securely erase information.

The restore defaults feature does not reset the Custom Secure Boot keys. See question and answer 7 for information about resetting the keys.

a. Turn on or restart the computer, and then quickly press esc.

b. Select **Main**, and then select **Apply Factory Defaults and Exit**.

c. Follow the on-screen instructions.

d. Select **Main**, select **Save Changes and Exit**, and then follow the on-screen instructions.

2. **What is a UEFI BIOS, and how is it different from a legacy BIOS?**

The Unified Extensible Firmware Interface (UEFI) BIOS is an industry-standard software interface between the platform firmware and an operating system (OS). It replaces the older BIOS architecture but supports much of the legacy BIOS functionality.

Like the legacy BIOS, the UEFI BIOS provides an interface to display the system information and configuration settings and to change the configuration of your computer before an OS is loaded. BIOS provides a secure runtime environment that supports a Graphic User Interface (GUI). In this environment, you can use either a pointing device (touch screen, touchpad, pointing stick, or USB mouse) or the keyboard to navigate and make menu and configuration selections. The UEFI BIOS also contains basic system diagnostics.

The UEFI BIOS provides functionality beyond that of the legacy BIOS. In addition, the UEFI BIOS works to initialize the computer's hardware before loading and executing the OS; the runtime environment allows the loading and execution of software programs from storage devices to provide more functionality, such as advanced hardware diagnostics (with the ability to display more detailed system information) and advanced firmware management and recovery software.

3. **Where is the UEFI BIOS located?**

The UEFI BIOS is located on a flash memory chip. You must use a utility to write to the chip.

4. **What kind of configuration data is stored on the DIMM Serial Presence Detect (SPD) memory module? How would this data be written?**

   The DIMM SPD memory contains information about the memory module, such as size, serial number, data width, speed and timing, voltage, and thermal information. This information is written by the module manufacturer and stored on an EEPROM. You cannot write to this EEPROM when the memory module is installed in a computer. Third-party tools do exist that can write to the EEPROM when the memory module is not installed in a computer. Various third-party tools are available to read SPD memory.

5. **What is meant by "Restore the nonvolatile memory found in Intel-based system boards"?**

   This message relates to clearing the Real Time Clock (RTC) CMOS memory that contains computer configuration data.

6. **How can the BIOS security be reset to factory defaults and erase the data?**

   IMPORTANT: Resetting results in the loss of information.

   These steps do not reset Custom Secure Boot Keys. See question and answer 7 for information about resetting the keys.

   a. Turn on or restart the computer, and then quickly press esc.

   b. Select **Main**, and then select **Reset Security to Factory Defaults**.

   c. Follow the on-screen instructions.

   d. Select **Main**, select **Save Changes and Exit**, and then follow the on-screen instructions.

7. **How can the Custom Secure Boot Keys be reset?**

   Secure Boot is a feature to ensure that only authenticated code can start on a platform. If you enabled Secure Boot and created Custom Secure Boot Keys, disabling Secure Boot does not clear the keys. You must also select to clear the Custom Secure Boot Keys. Use the same Secure Boot access procedure that you used to create the Custom Secure Boot Keys, but select to clear or delete all Secure Boot Keys.

   a. Turn on or restart the computer, and then quickly press esc.

   b. Select the **Security** menu, select **Secure Boot Configuration**, and then follow the on-screen instructions.

   c. At the **Secure Boot Configuration** window, select **Secure Boot**, select **Clear Secure Boot Keys**, and then follow the on-screen instructions to continue.

Using HP Sure Start (select products only)

Select computer models are configured with HP Sure Start, a technology that continuously monitors your computer's BIOS for attacks or corruption.

If the BIOS becomes corrupted or is attacked, HP Sure Start restores the BIOS to its previously safe state, without user intervention. Those select computer models ship with HP Sure Start configured and enabled. HP Sure Start is configured and already enabled so that most users can use the HP Sure Start default configuration. Advanced users can customize the default configuration.

To access the latest documentation on HP Sure Start, go to http://www.hp.com/support.

12 Power cord set requirements

The power supplies on some computers have external power switches.

The power cord set received with the computer meets the requirements for use in the country where you purchased the equipment.

Power cord sets for use in other countries must meet the requirements of the country where you use the computer.

General requirements

These requirements are applicable to all countries.

1. The power cord must be approved by an acceptable accredited agency responsible for evaluation in the country where the power cord set will be installed.
2. The power cord set must have a current capacity of 15A minimum for North America, 13A minimum for Taiwan, 12A minimum for Japan, and 10A minimum for all other countries and a nominal voltage rating of 125 V AC or 250 V AC, as required by each country's power system.
3. The diameter of the wire must be a minimum of 14 AWG for North America, a minimum of 1.25 mm^2 for Taiwan and Japan, and a minimum of 1.0 mm^2 for all other countries, and the length of the cord must be greater than 1.8 m (6.0 ft) and less than 3.0 m (9.8 ft).

The power cord should be routed so that it is not likely to be walked on or pinched by items placed upon it or against it. Particular attention should be paid to the plug, electrical outlet, and the point where the cord exits from the product.

⚠ **WARNING!** Do not operate this product with a damaged power cord set. If the power cord set is damaged in any manner, replace it immediately.

Japanese power cord requirements

For use in Japan, use only the power cord received with this product.

IMPORTANT: Do not use the power cord received with this product on any other products.

Country-specific requirements

This information provides additional requirements specific to a country.

Table 12-1 **Power cord country-specific requirements**

Country	Accrediting Agency	Country	Accrediting Agency
Australia (1)	EANSW	Italy (1)	IMQ
Austria (1)	OVE	Japan (3)	METI
Belgium (1)	CEBC	Norway (1)	NEMKO
Canada (2)	CSA	Sweden (1)	SEMKO
Denmark (1)	DEMKO	Switzerland (1)	SEV
Finland (1)	SETI	United Kingdom (1)	BSI
France (1)	UTE	United States (2)	UL
Germany (1)	VDE		

1. The flexible cord must be Type HO5VV-F, 3-conductor, 1.0 mm^2 conductor size. Power cord set fittings (appliance coupler and plug) must bear the certification mark of the agency responsible for evaluation in the country where it will be used.
2. The flexible cord must be Type SVT or equivalent, No. 14 AWG, 3 conductor. The plug must be a 2-pole grounding type with a NEMA 5-15P (15 A, 125 V) or NEMA 6-15P (15 A, 250 V) configuration.
3. Appliance coupler, flexible cord, and plug must bear a T mark and registration number in accordance with the Japanese Dentori Law. Flexible cord must be Type VCT or VCTF, 3-conductor, 1.25 mm^2 conductor size. Plug must be a 2-pole grounding type with a Japanese Industrial Standard C8303 (12 A, 125 V) configuration.

13 Specifications

This section provides specifications for your computer.

Table 13-1 Specifications

	Metric	U.S.
Dimensions		
Height	386 mm	15.2 in
Width	169 mm	6.7 in
Depth	445 mm	17.5 in
Approximate weight (no power supply)	6.77 kg	14.93 lbs
Temperature range		
Operating	5°C to 40°C	40°C to 104°F
Nonoperating	-40°F to 60°C	-40°F to 140°F
NOTE: Operating temperature is derated 1.0°C per 300 m (1000 ft) to 3000 m (10,000 ft) above sea level; no direct sustained sunlight. Maximum rate of change is 10° C/Hr. The upper limit might be limited by the type and number of options installed.		
Maximum altitude (unpressurized)		
Operating (with solid-state drives)	5,000 m	16,404 ft
Operating (with hard drives)	3,048 m	10,000 ft
Nonoperating	15,240 m	50,000 ft
Relative humidity (noncondensing)		
Operating	10% to 90%	10% to 90%
Nonoperating (38.7°C max wet bulb)	5% to 95%	5% to 95%
Power supply	525 W 775 W 1125 W	
Operating voltage range	90 V AC to 269 V AC	
Rated voltage frequency range	1125 W: 100 V AC; 12A @ 50-60 Hz, 115-127 V ac; 12A @50-60 Hz, 200-240 V AC; 10A @ 50-60 Hz 525 W/775 W: 100-240 V ac; 10A @ 50-60 Hz	
Operating line frequency range	1125 W: 100 V AC; 12A @ 47-66 Hz, 115-127 V AC; 12A @ 47-66 Hz, 200-240 V AC; 10A @ 47-66 Hz, 118 V ac; 12A @ 393-407 Hz 525 W/775 W:100-240 V AC; 10A @ 47-66 Hz, 118 V AC; 10A @ 393-407 Hz	
Efficiency	87/90/87% efficient at 20/50/100% load (@ 115 V)	
* = Input voltage restriction		

14 Linux technical notes

HP offers a variety of Linux® solutions for HP workstation customers:

- HP supports Ubuntu on some HP workstations.
- HP supports Red Hat® Enterprise Linux (RHEL) on HP workstations.
- HP certifies and supports SUSE Linux Enterprise Desktop (SLED) on HP workstations.

For Linux setup and restore procedures, see the user guide for your workstation.

NOTE: After you set up the operating system, make sure that the latest BIOS, drivers, and software updates are installed.

CAUTION: Do not add optional hardware or third-party devices to the workstation until the operating system is successfully installed. Adding hardware might cause errors and prevent the operating system from installing correctly.

System RAM

HP supports different amounts of total RAM in various HP workstations, based on the number of hardware DIMM slots and the capabilities of the system.

The total memory supported for each configuration is listed in the *Hardware Support Matrix for HP Linux Workstations* at http://www.hp.com/support/%20linux_hardware_matrix.

Audio

All HP workstations come with built-in audio hardware. The audio hardware is supported by the Advanced Linux Sound Architecture (ALSA) drivers included with all modern Linux distributions.

The audio hardware provides basic playback and recording features. The ability to simultaneously play audio from multiple sources, such as applications and CDs, is provided in the ALSA driver that provides audio mixing. The performance of software audio mixing and playback is greatly improved in ALSA version 1.0.13 and later.

After the driver is installed, the optional NVIDIA and AMD graphics cards that are supported in HP workstations also provide audio functionality over HDMI. The signal can be passed through the DisplayPort™ connector to a monitor with audio capabilities. The vendor driver must be installed. Such a configuration might present two audio hardware choices. If you do not hear sound through the speakers, one possible reason is that the graphics card (default) is selected for audio output instead of the DisplayPort. Check the audio settings (for example, **Sound** in gnome-control-center).

In some systems, embedded Intel HD graphics may also present a similar HDMI audio device that can be used through the DisplayPort interface. No proprietary driver is needed for this device, just a sufficiently recent kernel.

Hyper-Threading Technology

The Z Series Workstations support Hyper-Threading Technology (HTT), an Intel technology that improves processor performance by enabling the processor to simultaneously perform multiple tasks.

The operating system treats an HTT-enabled processor as two virtual processors and shares the workload between them when possible. This feature can be used only if the operating system support multiple processors and is specifically optimized for HTT.

To enable HTT:

1. During startup, press F10 to enter Computer Setup (F10) Utility.
2. Select **Advanced > Performance Options**.
3. Set **Intel Hyperthreading** to **Enable**, and then press F10 to exit the menu.
4. Select **Main > Save Changes and Exit**.
5. Restart the system to enable HTT.

NOTE: On most recent Linux distributions, the kernel automatically detects that HTT is enabled and works correctly.

NVIDIA graphics workstations

Some workstation configurations come with NVIDIA Quadro graphics hardware. HP recommends the use of NVIDIA drivers for best results on Linux systems.

HP provides recommended versions of the drivers with RPM-compatible installers for RHEL and SLED distributions. These are available from the HP Installer Kit for Linux and from workstation driver repositories on hp.com. When HP installers are used, their contents and documentation links are located in the /opt/hp/nvidia folder.

When installing Linux on a workstation that contains an NVIDIA card, administrators should select a VESA-compatible driver to avoid the instability that is experienced with some open-source versions of the Nouveau and DRM drivers.

Open-source versions of Nouveau drivers and NVIDIA drivers cannot coexist in the same runtime environment because they use the same hardware resources. If administrators create their own Linux environments using NVIDIA drivers but choose not to use HP-packaged versions, HP recommends that they manually append the following boot loader parameters to properly suppress the Nouveau driver at runtime (grub example below):

```
kernel /vmlinuz ... rdblacklist=nouveau nouveau.modeset=0
```

This action is applied by HP installers but must be applied and restored under other circumstances.

To customize display characteristics and resolutions when the computer is using an NVIDIA driver, run the following command:

```
/usr/bin/nvidia-settings
```

To create and manipulate the **/etc/X11/xorg.conf** file, run:

```
/usr/bin/nvidia-xconfig
```

AMD graphics workstations

Some workstation configurations include AMD graphics hardware. All of the supported Linux distributions should have an “in-box” driver that supports the hardware well enough for the X server to run.

Xorg drivers that might be loaded as the server starts are as follows:

- The Radeon in-box X driver will associate with some older GPUs.
- The *fbdev* or *vesa X* driver might activate for certain other cards.
- The newer *amdgpu* driver might be present in some distributions but it does not support all AMD GPUs.
- There is also a generic *modesetting* driver in some distributions.

You might see a kernel DRM module activated for AMD graphics. The Radeon kernel module is loaded in many distributions. The older proprietary module name is *fglrx* and is only present after installing the AMD vendor driver. The newer module is *amdgpu* and might be present in newer kernels even without the vendor driver because it is an open-source modesetting module.

To achieve the best hardware acceleration for OpenGL and other APIs, the AMD advanced vendor driver (usually named *amdgpu-pro*) is recommended. AMD packages this driver for specific Linux releases and posts them on their website. For enterprise Linux distributions that require subscriptions, the installation process requires that either you have the installation media on hand or have registered to access online repositories. The access to repositories allows the installer to satisfy dependencies, including the basic build environment (compilers and linkers) needed to build the *amdgpu-pro* version of the kernel driver.

HP might at some time post a particular tested version of the *amdgpu-pro* driver on support pages at hp.com.

The *amdgpu-pro* driver lacks a settings application similar to the Catalyst Control Center that was associated with the *fglrx* driver.

Index

A

access panel
  illustrated 5
  locked 44
  removal and replacement 19
Advanced menu, Computer Setup 71
antenna cover, identifying 3
audible codes 87
audio problems 50
audio-out (headphone)/audio-in (microphone) combo jack, identifying 1, 3

B

backup, creating 92
backups 92
battery
  disposal 7, 13, 14
battery replacement 34
beep codes 87
blinking lights 87
boot order, changing 94
booting options
  Full Boot 81
  Quick Boot 81
Built-In Self-Test (BIST) LED , identifying 3

C

cable management 7, 15
cable pinouts, SATA data 15
card guide assembly
  removal and replacement 20
changing a Power-On password 90
changing a Setup password 90
chassis
  illustrated 5
cleaning
  computer 7, 10, 12
  mouse 7, 10, 13
  safety precautions 7, 10
cleaning your computer
  disinfecting 11
  removing dirt and debris 11
CMOS
  clearing and resetting 90
components
  front 1
  left 1
  rear 2
computer cleaning 7, 10, 12
computer features 1
computer major components
  illustrated 4
Computer Setup
  access problem 44
  Advanced menu 71
  Main menu 61
  Security menu 65
Computer Setup Utility 60
connectors
  power 2
country power cord set requirements 108
Customer Support 43

D

deleting a Power-On password 90
deleting a Setup password 90
drive carrier
  illustrated 6
dust filter
  removal and replacement 19

E

electrostatic discharge (ESD) 7
  preventing damage 7, 8
error
  codes 81, 87
error messages 81
expansion card
  removal 29
expansion card guide
  illustrated 6

F

F10 Setup 60
  access problem 44
feet
  illustrated 6
  removal and replacement 17
flash drive problems 57
front bezel
  illustrated 6
  removal and replacement 18
front card guide and fan
  illustrated 6
  removal and replacement 27
front I/O assembly
  illustrated 6

G

general problems 44
graphics card
  illustrated 5
grounding methods 7, 8

H

handle
  illustrated 6
  removal and replacement 21
hard drive
  illustrated 6
  proper handling 7, 13, 14
  removal 35
  SATA characteristics 15
hard drive activity light, identifying 1
hard drive problems 48
hardware installation
  problems 53
heat sink
  removal and replacement 37
helpful hints 44
HP flex IO port, identifying 3
HP PC Hardware Diagnostics UEFI
  downloading 98
  failure ID code 97
  HP Hotkey Support software 98
  starting 97, 98
  using 97
HP PC Hardware Diagnostics Windows
  accessing 95, 96
  downloading 96
  failure ID code 95

installing 97
using 95
HP Recovery media
recovery 93
HP Sure Recover 94
HP Sure Start 101, 106

I

I/O assembly
removal and replacement 31
illustrated parts catalog 4
installing
battery 34
memory 23
interlock assembly
removal and replacement 33
interlock housing
illustrated 6
interlock switch
illustrated 6
internet access problems 58

J

jacks
audio-out (headphone)/audio-in (microphone) 1, 3
network 2
Remote interface 3
RJ-45 (network) 2

K

keyboard
cleaning 7, 10, 12
keyboard problems 52

L

left side access panel handle, identifying 2
left side access panel lock, identifying 2
lights
blinking PS/2 keyboard 87
Linux technical notes 111

M

Main menu, Computer Setup 61
memory
installation 23
nonvolatile 101
problems 56
socket population 23
volatile 101
memory card fan
illustrated 6
memory fan
removal and replacement 28
memory module
illustrated 5
mouse
cleaning 7, 10, 13
problems 52

N

network jack, identifying 2
network problems 54
nonvolatile memory 101
numeric error codes 81

O

operating guidelines 7, 10
optical drive carrier
removal and replacement 32
overheating, prevention 7, 10

P

password
Power-On 90
security 90
Setup 90
PCI retainer fan
illustrated 6
PCIe retainer fan
removal and replacement 26
ports
HP flex IO 3
USB SuperSpeed 1, 3
USB SuperSpeed port with HP Sleep and Charge 1
POST error messages 81
power button, identifying 1, 3
power connector
identifying 2
power cord set requirements
country specific 108
power problems 47
power supply
illustrated 5
operating voltage range 110
removal and replacement 40
Power-On password 90
printer problems 51
problems
audio 50
Computer Setup 44
F10 Setup 44
flash drive 57
general 44
hard drive 48
hardware installation 53
internet access 58
keyboard 52
memory 56
mouse 52
network 54
power 47
printer 51
software 58
processor
illustrated 4
removal and replacement 38

R

rear fan
illustrated 5
removal and replacement 36
recovery 92, 93
discs 93
media 93
USB flash drive 93
recovery media 92
creating using HP Cloud Recovery Download Tool 92
creating using Windows tools 92
Remote HP PC Hardware Diagnostics UEFI settings
customizing 99
using 99
Remote interface jack, identifying 3
removal and replacement
card guide assembly 20
dust filter 19
feet 17
front bezel 18, 19
front card guide and fan 27
handle 21
heat sink 37
I/O assembly 31
interlock assembly 33
memory fan 28
optical drive carrier 32
PCIe retainer fan 26
power supply 40
processor 38
rear fan 36
solid-state drive 22
system board 41

removing
battery 34
expansion card 29
hard drive 35
removing personal data from
volatile system memory 101
restoring 92
restoring and recovery
methods 93
RJ-45 (network) jack, identifying 2

S

safety precautions
cleaning 7, 10
SATA
connectors on system
board 15
data cable pinouts 15
hard drive characteristics 15
screws, correct size 7, 13, 14
Security menu, Computer
Setup 65
service considerations 7, 13
Setup password 90
slots
memory card reader 1
PCIe card 3
PCIe card slot, identifying 3
software
problems 58
servicing computer 7, 13
solid-state drive
illustrated 5
solid-state drive latch
illustrated 6
solid-state drive module
removal and replacement 22
specifications
computer 110
specifications, product 3
static electricity 7
system board
illustrated 5
removal and replacement 41
SATA connectors 15
system memory, removing
personal data from
volatile 101
system restore 93
system restore point, creating 92

T

temperature control 7, 10
tools, servicing 7, 13
Torx T15 screwdriver 7, 13
troubleshooting without
diagnostics 43

U

USB SuperSpeed port with HP
Sleep and Charge,
identifying 1
USB SuperSpeed port,
identifying 1
USB SuperSpeed ports,
identifying 3
using Computer Setup
Utilities 60

V

ventilation, proper 7, 10

W

Windows
backup 92
recovery media 92
system restore point 92
Windows tools, using 92