Maintenance and Service Guide

SUMMARY

This guide provides maintenance information about such topics as spare parts, removal and replacement of parts, security, and backing up.

Legal information

© Copyright 2023 HP Development Company, L.P.

AMD is a trademark of Advanced Micro Devices, Inc. Bluetooth is a trademark owned by its proprietor and used by HP Inc. under license. The terms HDMI, HDMI High-Definition Multimedia Interface, and the HDMI Logo are trademarks or registered trademarks of HDMI Licensing Administrator, Inc. Intel, Celeron, Core, and Iris are trademarks of Intel Corporation or its subsidiaries in the U.S. and/or other countries. Chrome, Chrome OS, Chromebook, Chromebox, and Google Drive are trademarks of Google LLC. Windows is either registered a trademarks or trademarks of Microsoft Corporation in the United States and/or other countries. NVMe is a registered trademark of NVM Express. PCIe is a US registered trademark and/or service mark of PCI-SIG. microSD is a trademark or registered trademark of SD-3C LLC. USB Type-C and USB-C are registered trademarks of USB Implementers Forum. DisplayPort™ and the DisplayPort™ logo are trademarks owned by the Video Electronics Standards Association (VESA®) in the United States and other countries. Wi-Fi is a registered trademark of Wi-Fi Alliance.

The information contained herein is subject to change without notice. The only warranties for HP products and services are set forth in the express warranty statements accompanying such products and services. Nothing herein should be construed as constituting an additional warranty. HP shall not be liable for technical or editorial errors or omissions contained herein.

First Edition: July 2023

Document Part Number: N56385-001

Product notice

This guide describes features that are common to most models. Some features may not be available on your computer.

To access the latest user guides, go to http://www.hp.com/support, and follow the instructions to find your product. Then select **Manuals**.

Software terms

By installing, copying, downloading, or otherwise using any software product preinstalled on this computer, you agree to be bound by the terms of the HP End User License Agreement (EULA). If you do not accept these license terms, your sole remedy is to return the entire unused product (hardware and software) within 14 days for a full refund subject to the refund policy of your seller.

For any further information or to request a full refund of the price of the computer, please contact your seller.

Safety warning notice

Reduce the possibility of heat-related injuries or of overheating the computer by following the practices described.

⚠ **WARNING!** To reduce the possibility of heat-related injuries or of overheating the computer, do not place the computer directly on your lap or obstruct the computer air vents. Use the computer only on a hard, flat surface. Do not allow another hard surface, such as an adjoining optional printer, or a soft surface, such as pillows or rugs or clothing, to block airflow. Also, do not allow the AC adapter to come into contact with the skin or a soft surface, such as pillows or rugs or clothing, during operation. The computer and the AC adapter comply with the user-accessible surface temperature limits defined by applicable safety standards.

Table of contents

1 Product description 1

2 Components 3

Right 3

Front 3

Rear 5

Bottom 6

Labels 6

3 Illustrated parts catalog 9

Chromebox major components 9

Miscellaneous parts 11

4 Removal and replacement procedures preliminary requirements 13

Tools required 13

Service considerations 13

Plastic parts 13

Cables and connectors 13

Drive handling 13

Electrostatic discharge information 14

Generating static electricity 14

Preventing electrostatic damage to equipment 15

Personal grounding methods and equipment 15

Grounding the work area 16

Recommended materials and equipment 16

Cleaning your computer 17

Enabling HP Easy Clean (select products only) 17

Removing dirt and debris from your computer 17

Cleaning your computer with a disinfectant 18

Caring for wood veneer (select products only) 19

Packaging and transporting guidelines 19

Accessing support information 20

5 Removal and replacement procedures for authorized service provider parts 22

Component replacement procedures 22

Preparation for disassembly 22

Bottom cover 22

I/O side frame 23

Bottom shield 24

Power connector cable 25

WLAN module 26

Solid-state drive 28
Memory module 29
System board 30
Fan 33
Heat sink 33
Top shield 35
Power button board 36

6 Backing up, resetting, and recovering 38

Backing up 38

Resetting 38

Recovering 38
Option 1: Recovering using an internet connection 39
Option 2: Installing the Chromebook Recovery Utility 39
Creating recovery media 40
Recovering the Chrome operating system with recovery media 40

Setting up your computer after a reset or recovery 40

Erasing and reformatting the recovery media 41

7 Statement of memory volatility 42

Current BIOS steps 42

Nonvolatile memory usage 44

Questions and answers 44

Using HP Sure Start (select products only) 46

8 Statement of memory volatility 47

Current BIOS steps 47

Nonvolatile memory usage 49

Questions and answers 49

Using HP Sure Start (select products only) 51

9 Specifications 52

Computer specifications 52

Solid-state drive specifications 52

10 Power cord set requirements 54

Requirements for all countries 54

Requirements for specific countries and regions 54

11 Recycling 56

Index 57

1 Product description

This table provides detailed product information.

Table 1-1 Product components and their descriptions

Category	Description
Product Name	**HP Chromebox™ G4**
Processors	Intel® Core® i7-1365U (up to 3.9 GHz, up to 5.2 GHz with Intel Turbo Boost Technology, 12 MB Intel Smart Cache, 10 cores, 15 W)
	Intel Core i5-1345U (up to 3.5 GHz, up to 4.7 GHz with Intel Turbo Boost Technology, 12 MB Intel Smart Cache, 10 cores, 15 W)
	Intel Core i5-1335U (up to 3.4 GHz, up to 4.6 GHz with Intel Turbo Boost Technology, 12 MB Intel Smart Cache, 10 cores, 15 W)
	Intel Core i3-1315U (up to 3.3 GHz, up to 4.5 GHz with Intel Turbo Boost Technology, 10 MB Intel Smart Cache, 6 cores, 15 W)
	Intel Celeron® 7305 (up to 1.1 GHz, 8 MB Intel Smart Cache, 5 cores, 15 W)
Graphics	**Internal graphics**
	Intel Iris® Xe graphics (Core i7/i5 processors)
	Intel UHD Graphics (Core i3/Celeron processors)
	Supports HD Decode, DX12, and HDMI 2.0
Memory	SODIMM supporting up to 32 GB of RAM
	DDR4-3200 dual-channel support
	Supports the following configurations:
	• 32 GB
	• 16 GB
	• 8 GB
	• 4 GB
Primary storage	**Embedded MultiMedia Controller (eMMC) 5.0**
	64 GB
	PCIe®, (Non-Volatile Memory Express) NVMe®, M.2 2230/2280 solid-state drive
	256 GB
Wireless	**Wireless Local Area Network (WLAN)**
	Intel AX211 Wi-Fi® 6E Bluetooth® 5.3 WLAN
	Supports Wi-Fi BIOS SAR
Media card reader	**HP 3-in-1 Card Reader**

Table 1-1 Product components and their descriptions (continued)

Category	Description
Ports	USB Type-C®
	USB Type-A
	HDMI®
	RJ-45 (network) jack
	Audio-out (headphone)/audio-in (microphone) combo jack
	AC Smart Pin adapter plug
Keyboard/pointing devices	**USB Chrome Standalone Wired Keyboard and Mouse Combo**
Power requirements	**Smart AC adapter** (4.5 mm barrel)
	90 W, power factor correction [PFC], right angle
	65 W, nPFC, right angle
	65 W, nPFC, EM
	Power cord
	C5, conventional, power cord with sticker , 1 m (3.3 ft)
Wired LAN	10/100/1000M GbE LAN
Operating system	Google Chrome™ Premium
	Google Chrome Premium with Chrome Education Upgrade
	Google Chrome Premium with Chrome Enterprise Upgrade
	Google Chrome with Chrome Education Upgrade
	Google Chrome with Chrome Enterprise Upgrade
	Google Chrome
Serviceability	**End user replaceable parts**
	AC adapter

2 Components

Your Chromebox features top-rated components. This chapter provides details about your components, where they are located, and how they work.

Right

Use the illustration and table to identify the components on the right side of the Chromebox.

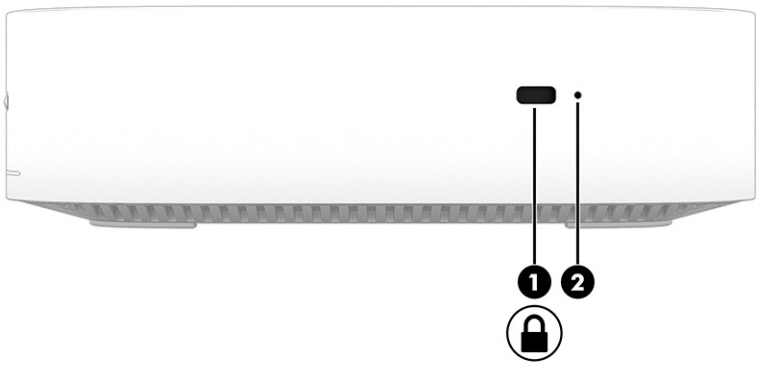

Table 2-1 Right-side components and their descriptions

Component		Description
(1)	Security cable slot	Attaches an optional security cable to the Chromebox. NOTE: The security cable is designed to act as a deterrent, but it might not prevent the Chromebox from being mishandled or stolen.
(2)	Recovery button	When your Chromebox's operating system (OS) doesn't work properly, you can recover it. Recovery removes and reinstalls the OS. You can also recover the OS with an internet connection. See https://support.google.com/ for directions on performing the recovery process for your device. IMPORTANT: Recovery permanently erases everything on your Chromebox's hard drive, even your downloaded files. If possible, before you recover your Chromebook, back up your files.

Front

Use the illustration and table to identify the components on the front of the Chromebox.

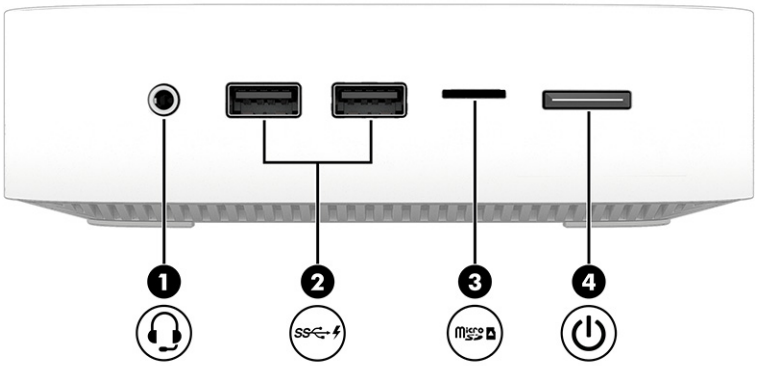

Table 2-2 **Front-side components and their descriptions**

Component		Description
(1)	Audio-out (headphone)/Audio-in (microphone) combo jack	Connects optional powered stereo speakers, headphones, earbuds, a headset, or a television audio cable. Also connects an optional headset microphone. This jack does not support optional standalone microphones. **WARNING!** To reduce the risk of personal injury, adjust the volume before putting on headphones, earbuds, or a headset. For additional safety information, see the *Regulatory, Safety, and Environmental Notices*. **NOTE:** When a device is connected to the jack, the computer speakers are disabled.
(2)	USB ports (2)	Connect a USB device, provide high-speed data transfer, and (for select products) charge small devices when the Chromebox is on or in Sleep mode.
(3)	microSD™ memory card reader	Reads optional memory cards that store, manage, share, or access information. To insert a card: 1. Hold the card label-side up, with the connectors facing the Chromebox. 2. Insert the card into the memory card reader, and then press in on the card until it is firmly seated. To remove a card: ■ Press in on the card, and then remove it from the memory card reader.

Table 2-2 Front-side components and their descriptions (continued)

Component		Description
(4)	Power button	• When the Chromebox is off, press the button briefly to turn on the Chromebox. • When the Chromebox is in the Sleep state, press the button briefly to exit Sleep (select products only). NOTE: Chromebox has no Hibernation mode. The device cannot enter Sleep mode after pressing the power button briefly. IMPORTANT: Pressing and holding down the power button results in the loss of unsaved information. If the Chromebox has stopped responding and shutdown procedures are ineffective, press and hold the power button for at least 10 seconds to turn off the Chromebox.

Rear

Use the illustration and table to identify the components on the rear of the Chromebox.

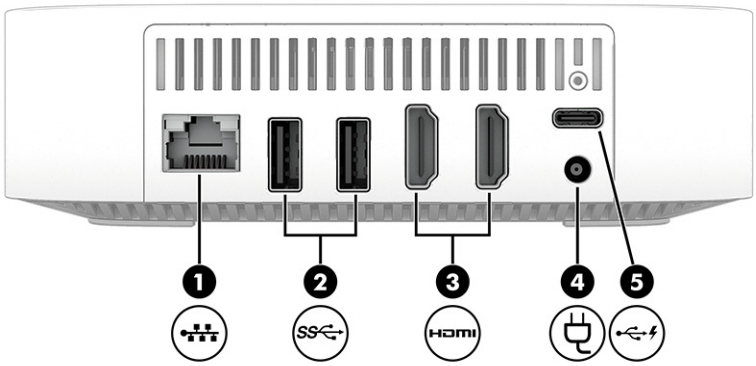

Table 2-3 Rear-side components and their descriptions

Component		Description
(1)	RJ-45 (network) jack	Connects a network cable.
(2)	USB ports (2)	Connect a USB device, provide data transfer, and (for select products) charge small devices when the Chromebox is on or in Sleep mode. NOTE: Cables, adapters, or both (purchased separately) might be required.
(3)	HDMI ports (2)	Connect an optional video or audio device, such as a high-definition television, any compatible digital or audio component, or a high-speed High Definition Multimedia Interface® (HDMI®) device.
(4)	AC adapter	Connects an AC adapter.

Table 2-3 Rear-side components and their descriptions (continued)

Component		Description
(5)	USB Type-C® port with HP Sleep and Charge	Connects a USB device, provides data transfer, and (for select products) charges small devices when the Chromebox is on or in Sleep mode.

Bottom

Use the illustration and table to identify the bottom components.

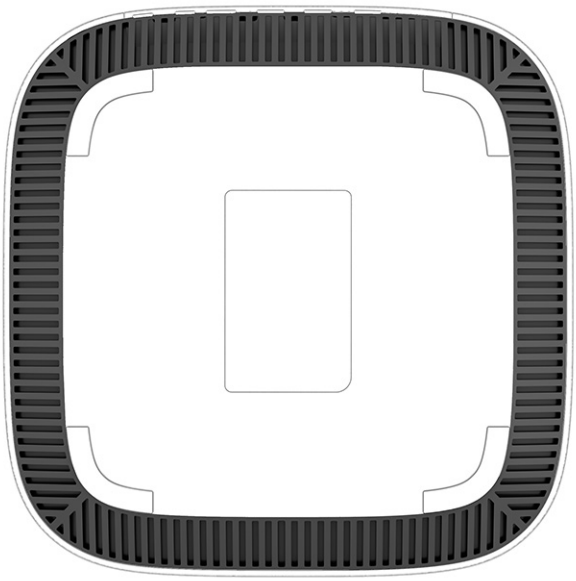

Table 2-4 Bottom component and description

Components	Description
Vent	Enables airflow to cool internal components. NOTE: The fan starts automatically to cool internal components and prevent overheating. It is normal for the internal fan to cycle on and off during routine operation.

Labels

The labels affixed to the computer provide information you might need when you troubleshoot system problems or travel internationally with the computer. Labels might be in paper form or imprinted on the product.

IMPORTANT: Check the following locations for the labels described in this section: the bottom of the computer, inside the battery bay, under the service door, on the back of the display, or on the bottom of a tablet kickstand.

- Service label—Provides important information to identify your computer. When contacting support, you might be asked for the serial number, the product number, or the model number. Locate this information before you contact support.

Your service label will resemble one of the following examples. Refer to the illustration that most closely matches the service label on your computer.

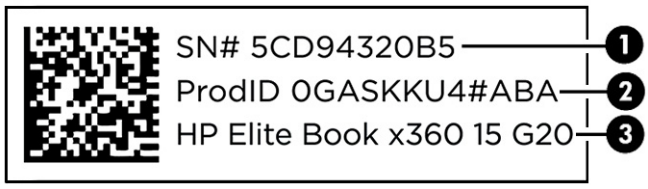

Table 2-5 Service label components

Component	
(1)	Serial number
(2)	Product ID
(3)	HP product name

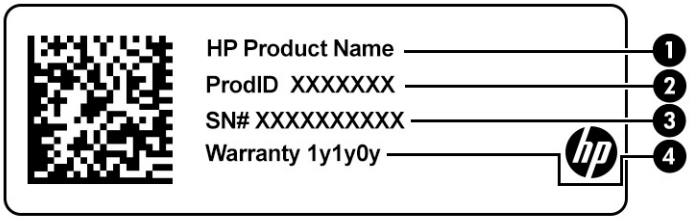

Table 2-6 Service label components

Component	
(1)	HP product name
(2)	Product ID
(3)	Serial number
(4)	Warranty period

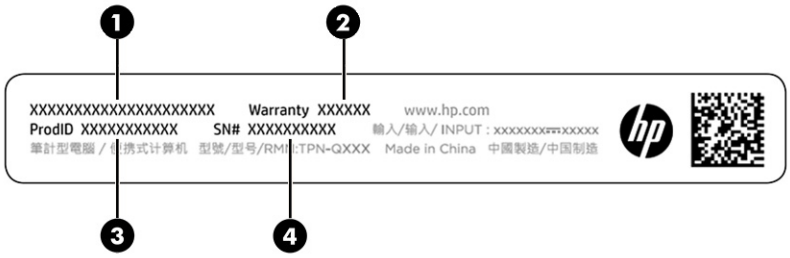

Table 2-7 **Service label components**

Component	
(1)	HP product name
(2)	Warranty period
(3)	Product ID
(4)	Serial number

- Regulatory labels—Provide regulatory information about the computer.
- Wireless certification labels—Provide information about optional wireless devices and the approval markings for the countries or regions where the devices have been approved for use.

3 Illustrated parts catalog

Use this chapter to determine the spare parts that are available for the computer.

Chromebox major components

To identify the Chromebox major components, use this illustration and table.

NOTE: HP continually improves and changes product parts. For complete and current information about supported parts for your computer, go to http://partsurfer.hp.com, select your country or region, and then follow the on-screen instructions.

NOTE: Details about your computer, including model, serial number, product key, and length of warranty, are on the service tag at the bottom of your computer.

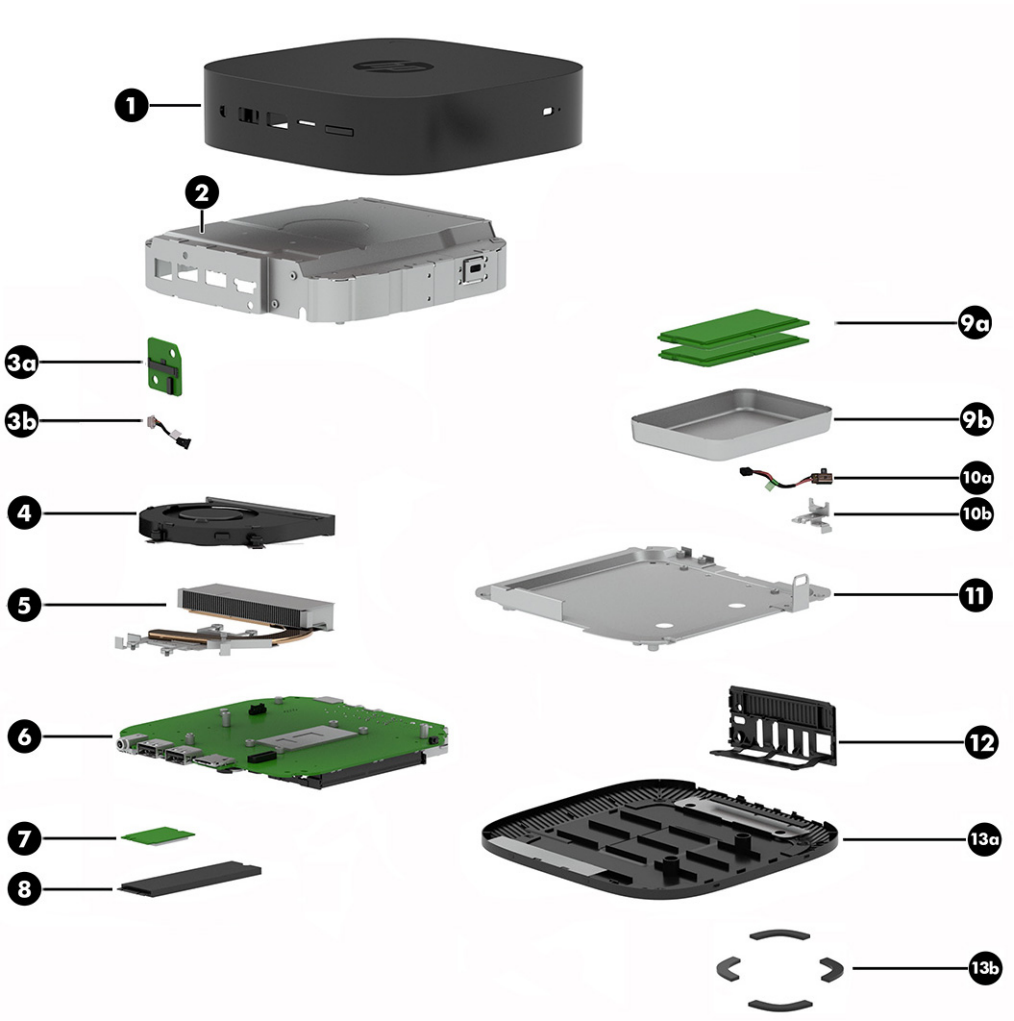

Table 3-1 **Chromebox major component descriptions and part numbers**

Item	Component	Spare part number
(1)	**Top cover**	N57806-001
(2)	**Top shield** (includes wireless antenna)	N57807-001
(3a)	**Power button board** NOTE: The power button board spare part kit does not include the power button board cable. The power button board cable is available using spare part number M42089-001.	M24724-001
(3b)	**Power button board cable**	M42089-001
(4)	**Fan** (includes cable)	N57810-001
(5)	**Heat sink** (15 W, includes replacement thermal material)	N57809-001
(6)	**System board** (includes processor, RTC battery, replacement thermal material, graphics subsystem with UMA memory, and Chrome operating system):	
	Intel Core i7-1365U processor	N57817-001
	Intel Core i5-1345U processor	N57816-001
	Intel Core i5-1345U processor and 64 GB of eMMC storage	N57820-001
	Intel Core i5-1335U processor	N57815-001
	Intel Core i3-1315U processor	N57814-001
	Intel Core i3-1315U processor and 64 GB of eMMC storage	N57819-001
	Intel Celeron 7305 processor	N57813-001
	Intel Celeron 7305 processor and 64 GB of eMMC storage	N57818-001
(7)	**WLAN module** (Intel AX211 Wi-Fi 6E Bluetooth 5.3 WLAN)	M53366-005
(8)	**Solid state drive** (256 GB)	M11042-005
(9a)	**Memory module** (DDR4, 3200 GHz, 1.2 V):	
	16 GB	L67710-005
	8 GB	L46598-005
	4 GB	L83673-005
(9b)	**Memory shield**	L17264-001
(10a)	**Power connector cable**	L17259-001
(10b)	**Power connector cable bracket**	M42090-001
	Power connector cable gasket (not illustrated)	L17265-001
(11)	**Bottom shield**	M41139-001
(12)	**I/O side frame**	N57808-001
(13a)	**Bottom cover**	L17258-001
(13b)	**Rubber Feet Kit**	L17271-001

Miscellaneous parts

To identify the miscellaneous parts, use this table.

Table 3-2 **Miscellaneous part descriptions and part numbers**

Component	Spare part number
AC adapter	
90 W (PFC, 3 pin, right angle, 4.5 mm)	L64042-001
65 W AC adapter (non-PFC, 3 pin, 4.5 mm)	710412-001
65 W (USB-C®, non-PFC 1.8 m [6 ft])	L67440-001
65 W (non-PFC, 4.5 mm, EM)	N31180-001
HP USB slim keyboard:	
For use in the United States	803823-001
For use in the United Kingdom	803823-031
For use in India	803823-D61
For use internationally	803823-L31
USB Keyboard, TAAL, wired	L91556-001
HP USB Optical Mouse	674316-001
Adapters:	
HDMI-to-VGA	701943-001
USB-C-to-VGA	831751-001
USB-C-to-USB-A	916838-001
USB-C-to-HDMI 2.0	935325-001
USB-C-to-DisplayPort™	831753-001
Smart AC adapter, 7.4 mm	734734-001
HP Keyed Cable Lock, 10 mm	840158-001
HP Sure Key Cable Lock	L65088-001
Mylar Kit (includes front and rear bottom Mylar shields)	L20217-001
Screw Kit	N57812-001
Power cord (C5, 1.0 m [3.3 ft], conventional with sticker)	
For use in Argentina	L19357-001
For use in Australia	L19358-001
For use in Brazil	L19359-001
For use in Denmark	L19360-001
For use in Europe	L19361-001
For use in Europe (bundle)	N16170-001
For use in India	L19363-002

Table 3-2 **Miscellaneous part descriptions and part numbers (continued)**

Component	Spare part number
For use in Israel	L19362-001
For use in Italy	L19364-001
For use in Japan	L19365-001
For use in North America	L19367-001
For use in the People's Republic of China	L19368-001
For use in South Africa	L19369-001
For use in South Korea	L19366-001
For use in Switzerland	L19370-001
For use in Taiwan	L19372-001
For use in Thailand	L19371-001
For use in Thailand (bundle)	M85418-001
For use in the United Kingdom	L19373-001
Power cord (C5, 1.83 m [6.0 ft], conventional):	
For use in Australia	490370-011
For use in Brazil	490370-202
For use in Europe	490370-021
For use in India	490370-D61
For use in Israel	490370-BB1
For use in Italy	490370-061
For use in North America	490370-001
For use in South Africa	490370-AR1
For use in South Korea	490370-AD1
For use in Switzerland	490371-111
For use in Taiwan	490370-AB1
For use in the United Kingdom	490370-031

4 Removal and replacement procedures preliminary requirements

Use this information to properly prepare to disassemble and reassemble the computer.

Tools required

You need the following tools to complete the removal and replacement procedures:

- Nonconductive, nonmarking pry tool
- Magnetic Phillips P2 screwdriver

Service considerations

The following sections include some of the considerations that you must keep in mind during disassembly and assembly procedures.

NOTE: As you remove each subassembly from the computer, place the subassembly (and all accompanying screws) away from the work area to prevent damage.

Plastic parts

Using excessive force during disassembly and reassembly can damage plastic parts.

Cables and connectors

Handle cables with extreme care to avoid damage.

IMPORTANT: When servicing the computer, be sure that cables are placed in their proper locations during the reassembly process. Improper cable placement can damage the computer.

Apply only the tension required to unseat or seat the cables during removal and insertion. Handle cables by the connector whenever possible. In all cases, avoid bending, twisting, or tearing cables. Be sure that cables are routed so that they cannot be caught or snagged as you remove or replace parts. Handle flex cables with extreme care; these cables tear easily.

Drive handling

Note the following guidelines when handling drives.

IMPORTANT: Drives are fragile components. Handle them with care. To prevent damage to the computer, damage to a drive, or loss of information, observe these precautions:

- Before removing or inserting a hard drive, shut down the computer. If you are unsure whether the computer is off or in Hibernation, turn the computer on, and then shut it down through the operating system.

- Before handling a drive, be sure that you are discharged of static electricity. While handling a drive, avoid touching the connector.
- Before removing an optical drive, be sure that a disc is not in the drive, and be sure that the optical drive tray is closed.
- Handle drives on surfaces covered with at least 2.54 cm (1 inch) of shock-proof foam.
- Avoid dropping drives from any height onto any surface.
- After removing a hard drive or an optical drive, place it in a static-proof bag.
- Avoid exposing an internal hard drive to products that have magnetic fields, such as monitors or speakers.
- Avoid exposing a drive to temperature extremes or liquids.
- If a drive must be mailed, place the drive in a bubble pack mailer or other suitable form of protective packaging, and label the package “FRAGILE.”

Electrostatic discharge information

A sudden discharge of static electricity from your finger or other conductor can destroy static-sensitive devices or microcircuitry. Often the spark is neither felt nor heard, but damage occurs. An electronic device exposed to electrostatic discharge (ESD) might not appear to be affected at all and can work perfectly throughout a normal cycle. The device might function normally for a while, but it has been degraded in the internal layers, reducing its life expectancy.

Networks built into many integrated circuits provide some protection, but in many cases, the discharge contains enough power to alter device parameters or melt silicon junctions.

IMPORTANT: To prevent damage to the device when you remove or install internal components, observe these precautions:

- Keep components in their electrostatic-safe containers until you are ready to install them.
- Before touching an electronic component, discharge static electricity by using the guidelines described in Personal grounding methods and equipment on page 15.
- Avoid touching pins, leads, and circuitry. Handle electronic components as little as possible.
- If you remove a component, place it in an electrostatic-safe container.

Generating static electricity

Follow these static electricity guidelines:

- Different activities generate different amounts of static electricity.
- Static electricity increases as humidity decreases.

Table 4-1 **Static electricity occurrence based on activity and humidity**

	Relative humidity		
Event	**55%**	**40%**	**10%**
Walking across carpet	7,500 V	15,000 V	35,000 V
Walking across vinyl floor	3,000 V	5,000 V	12,000 V
Motions of bench worker	400 V	800 V	6,000 V
Removing dual in-line packages (DIPs) from plastic tube	400 V	700 V	2,000 V
Removing DIPs from vinyl tray	2,000 V	4,000 V	11,500 V
Removing DIPs from polystyrene foam	3,500 V	5,000 V	14,500 V
Removing bubble pack from PCB (printed circuit board)	7,000 V	20,000 V	26,500 V
Packing PCBs in foam-lined box	5,000 V	11,000 V	21,000 V
Multiple electric components can be packaged together in plastic tubes, trays, or polystyrene foam.			

NOTE: As little as 700 V of static electricity can degrade a product.

Preventing electrostatic damage to equipment

Many electronic components are sensitive to ESD. Circuitry design and structure determine the degree of sensitivity.

The following packaging and grounding precautions are necessary to prevent static electricity damage to electronic components:

- To avoid hand contact, transport products in static-safe containers such as tubes, bags, or boxes.
- Protect all electrostatic parts and assemblies with conductive or approved containers or packaging.
- Keep electrostatic-sensitive parts in their containers until they arrive at static-free stations.
- Place items on a grounded surface before removing them from their container.
- Always be properly grounded when touching a sensitive component or assembly.
- Avoid contact with pins, leads, or circuitry.
- Place reusable electrostatic-sensitive parts from assemblies in protective packaging or conductive foam.

Personal grounding methods and equipment

Using certain equipment can prevent static electricity damage to electronic components.

- **Wrist straps** are flexible straps with a maximum of 1 MΩ ±10% resistance in the ground cords. To provide proper ground, a strap must be worn snug against bare skin. The ground cord must be connected and fit snugly into the banana plug connector on the grounding mat or workstation.
- You can use **heel straps, toe straps, and boot straps** at standing workstations. These straps are compatible with most types of shoes or boots. On conductive floors or dissipative floor mats, use them on both feet with a maximum of 1 MΩ ±10% resistance between the operator and ground.

Table 4-2 **Static shielding protection levels**

Static shielding protection levels	
Method	**Voltage**
Antistatic plastic	1,500
Carbon-loaded plastic	7,500
Metallized laminate	15,000

Grounding the work area

To prevent static damage at the work area, follow these precautions:

- Cover the work surface with approved static-dissipative material.
- Use a wrist strap connected to a properly grounded work surface and use properly grounded tools and equipment.
- Use static-dissipative mats, foot straps, or air ionizers to give added protection.
- Handle electrostatic sensitive components, parts, and assemblies by the case or PCB laminate. Handle them only at static-free work areas.
- Turn off power and input signals before inserting and removing connectors or test equipment.
- Use fixtures made of static-safe materials when fixtures must directly contact dissipative surfaces.
- Keep the work area free of nonconductive materials, such as ordinary plastic assembly aids and polystyrene foam.
- Use conductive field service tools, such as cutters, screwdrivers, and vacuums.
- Avoid contact with pins, leads, or circuitry.

Recommended materials and equipment

HP recommends certain materials and equipment to prevent static electricity:

- Antistatic tape
- Antistatic smocks, aprons, or sleeve protectors
- Conductive bins and other assembly or soldering aids
- Conductive foam
- Conductive tabletop workstations with ground cord of 1 MΩ ±10% resistance
- Static-dissipative table or floor mats with hard tie to ground
- Field service kits
- Static awareness labels
- Wrist straps and footwear straps providing 1 MΩ ±10% resistance
- Material handling packages

- Conductive plastic bags
- Conductive plastic tubes
- Conductive tote boxes
- Opaque shielding bags
- Transparent metallized shielding bags
- Transparent shielding tubes

Cleaning your computer

Cleaning your computer regularly removes dirt and debris so that your device continues to operate at its best. Use the following information to safely clean the external surfaces of your computer.

Enabling HP Easy Clean (select products only)

HP Easy Clean helps you to avoid accidental input while you clean the computer surfaces. This software disables devices such as the keyboard, touch screen, and touchpad for a preset amount of time so that you can clean all computer surfaces.

1. Start HP Easy Clean in one of the following ways:
   - Select the **Start** menu, and then select **HP Easy Clean**.

     – or –

   - Select the **HP Easy Clean** icon in the taskbar.

     – or –

   - Select **Start**, and then select the **HP Easy Clean** tile.
2. Now that your device is disabled for a short period, see Removing dirt and debris from your computer on page 17 for the recommended steps to clean the high-touch, external surfaces on your computer. After you remove the dirt and debris, you can also clean the surfaces with a disinfectant. See Cleaning your computer with a disinfectant on page 18 for guidelines to help prevent the spread of harmful bacteria and viruses.

Removing dirt and debris from your computer

Here are the recommended steps to clean dirt and debris from your computer.

For computers with wood veneer, see Caring for wood veneer (select products only) on page 19.

1. Wear disposable gloves made of latex (or nitrile gloves, if you are latex-sensitive) when cleaning the surfaces.
2. Turn off your device and unplug the power cord and other connected external devices. Remove any installed batteries from items such as wireless keyboards.

⚠ **CAUTION:** To prevent electric shock or damage to components, never clean a product while it is turned on or plugged in.

3. Moisten a microfiber cloth with water. The cloth should be moist, but not dripping wet.

IMPORTANT: To avoid damaging the surface, avoid abrasive cloths, towels, and paper towels.

4. Wipe the exterior of the product gently with the moistened cloth.

IMPORTANT: Keep liquids away from the product. Avoid getting moisture in any openings. If liquid makes its way inside your HP product, it can cause damage to the product. Do not spray liquids directly on the product. Do not use aerosol sprays, solvents, abrasives, or cleaners containing hydrogen peroxide or bleach that might damage the finish.

5. Start with the display (if applicable). Wipe carefully in one direction, and move from the top of the display to the bottom. Finish with any flexible cables, like power cord, keyboard cable, and USB cables.

6. Be sure that surfaces have completely air-dried before turning the device on after cleaning.

7. Discard the gloves after each cleaning. Clean your hands immediately after you remove the gloves.

See Cleaning your computer with a disinfectant on page 18 for recommended steps to clean the high-touch, external surfaces on your computer to help prevent the spread of harmful bacteria and viruses.

Cleaning your computer with a disinfectant

The World Health Organization (WHO) recommends cleaning surfaces, followed by disinfection, as a best practice for preventing the spread of viral respiratory illnesses and harmful bacteria.

After cleaning the external surfaces of your computer using the steps in Removing dirt and debris from your computer on page 17, Caring for wood veneer (select products only) on page 19, or both, you might also choose to clean the surfaces with a disinfectant. A disinfectant that is within HP's cleaning guidelines is an alcohol solution consisting of 70% isopropyl alcohol and 30% water. This solution is also known as rubbing alcohol and is sold in most stores.

Follow these steps when disinfecting high-touch, external surfaces on your computer:

1. Wear disposable gloves made of latex (or nitrile gloves, if you are latex-sensitive) when cleaning the surfaces.

2. Turn off your device and unplug the power cord and other connected external devices. Remove any installed batteries from items such as wireless keyboards.

CAUTION: To prevent electric shock or damage to components, never clean a product while it is turned on or plugged in.

3. Moisten a microfiber cloth with a mixture of 70% isopropyl alcohol and 30% water. The cloth should be moist, but not dripping wet.

CAUTION: Do not use any of the following chemicals or any solutions that contain them, including spray-based surface cleaners: bleach, peroxides (including hydrogen peroxide), acetone, ammonia, ethyl alcohol, methylene chloride, or any petroleum-based materials, such as gasoline, paint thinner, benzene, or toluene.

IMPORTANT: To avoid damaging the surface, avoid abrasive cloths, towels, and paper towels.

4. Wipe the exterior of the product gently with the moistened cloth.

IMPORTANT: Keep liquids away from the product. Avoid getting moisture in any openings. If liquid makes its way inside your HP product, it can cause damage to the product. Do not spray liquids directly on the product. Do not use aerosol sprays, solvents, abrasives, or cleaners containing hydrogen peroxide or bleach that might damage the finish.

5. Start with the display (if applicable). Wipe carefully in one direction, and move from the top of the display to the bottom. Finish with any flexible cables, like power cord, keyboard cable, and USB cables.

6. Be sure that surfaces have completely air-dried before turning the device on after cleaning.

7. Discard the gloves after each cleaning. Clean your hands immediately after you remove the gloves.

Caring for wood veneer (select products only)

Your product might feature high-quality wood veneer. As with all natural wood products, proper care is important for best results over the life of the product. Because of the nature of natural wood, you might see unique variations in the grain pattern or subtle variations in color, which are normal.

- Clean the wood with a dry, static-free microfiber cloth or chamois.
- Avoid cleaning products containing substances such as ammonia, methylene chloride, acetone, turpentine, or other petroleum-based solvents.
- Do not expose the wood to sun or moisture for long periods of time.
- If the wood becomes wet, dry it by dabbing with an absorbent, lint-free cloth.
- Avoid contact with any substance that might dye or discolor the wood.
- Avoid contact with sharp objects or rough surfaces that might scratch the wood.

See Removing dirt and debris from your computer on page 17 for the recommended steps to clean the high-touch, external surfaces on your computer. After you remove the dirt and debris, you can also clean the surfaces with a disinfectant. See Cleaning your computer with a disinfectant on page 18 for sanitizing guidelines to help prevent the spread of harmful bacteria and viruses.

Packaging and transporting guidelines

Follow these grounding guidelines when packaging and transporting equipment:

- To avoid hand contact, transport products in static-safe tubes, bags, or boxes.
- Protect ESD-sensitive parts and assemblies with conductive or approved containers or packaging.
- Keep ESD-sensitive parts in their containers until the parts arrive at static-free workstations.
- Place items on a grounded surface before removing items from their containers.
- Always be properly grounded when touching a component or assembly.
- Store reusable ESD-sensitive parts from assemblies in protective packaging or nonconductive foam.

- Use transporters and conveyors made of antistatic belts and roller bushings. Be sure that mechanized equipment used for moving materials is wired to ground and that proper materials are selected to avoid static charging. When grounding is not possible, use an ionizer to dissipate electric charges.

Accessing support information

To find the HP support that you need, use this information.

Table 4-3 Support information locations

Service consideration	Path to access information
Records of reported failure incidents stored on the computer	**Windows®:** Preoperating system failures are logged in the BIOS Event Log. To view the BIOS Event Log: 1. Press the power button. 2. Immediately and repeatedly press esc when the power button light turns white. NOTE: If you do not press esc at the appropriate time, you must restart the computer and again repeatedly press esc when the power button light turns white to access the utility. 3. Press f10 to enter the BIOS setup. 4. (On commercial products) Under the **Main** tab, select **BIOS event log**, and then select **View BIOS Event Log**. - or - (On consumer products) Under the **Main** tab, select **System Log**. Post-operating system failures are logged in the Event Viewer. 1. Turn on the computer and allow the operating system to open. 2. Select the search icon  in the taskbar. 3. Type `Event Viewer`, and then press enter. 4. Select the log from the left panel. Details display in the right panel. **Chrome™:** 1. Go to support.google.com/chrome. 2. Search `collect Chrome device logs`.
Technical bulletins	To locate technical bulletins: 1. Go to www.hp.com. 2. Place the cursor over **Problem solving** to display more options. 3. Select **Support & Troubleshooting**. 4. Type the serial number, product number, or product name to go to the product support page. 5. Select **Advisories** to view technical bulletins.

Table 4-3 Support information locations (continued)

Service consideration	Path to access information
Repair professionals	To locate repair professionals: 1. Go to www.hp.com. 2. Place the cursor over **Support resources** to display more options. 3. Select **Authorized service providers**.
Component and diagnosis information, failure detection, and required action	To locate diagnosis information and actions: 1. Go to http://www.hp.com/go/techcenter/pcdiags. 2. Select **Get Support**. 3. Near the bottom of the window, select **Notebook PCs**, and then select your location.

5 Removal and replacement procedures for authorized service provider parts

This chapter provides removal and replacement procedures for authorized service provider parts.

IMPORTANT: Only an authorized service provider should access the components described in this chapter. Accessing these parts can damage the computer or void the warranty.

NOTE: Details about your computer, including model, serial number, product key, and length of warranty, are on the service tag at the bottom of your computer.

Component replacement procedures

To remove and replace computer components, use the procedures described in this section.

NOTE: HP continually improves and changes product parts. For complete and current information about supported parts for your computer, go to https://partsurfer.hp.com/partsurfer/, select your country or region, and then follow the on-screen instructions.

Make special note of each screw size and location during removal and replacement.

Preparation for disassembly

To remove and replace computer components, use these procedures:

For initial safety procedures, see Removal and replacement procedures preliminary requirements on page 13.

1. Turn off the computer. If you are unsure whether the computer is off or in Hibernation, turn the computer on, and then shut it down through the operating system.
2. Disconnect the power from the computer by unplugging the power cord from the computer.
3. Disconnect all external devices from the computer.

Bottom cover

To remove the bottom cover, use this procedure and illustration.

Table 5-1 Bottom cover description and part number

Description	Spare part number
Bottom cover	L17258-001

Before removing the bottom cover, prepare the computer for disassembly (Preparation for disassembly on page 22).

Remove the bottom cover:

1. Position the computer upside down with the rear toward you.
2. Remove the four rubber feet **(1)**.

   The rubber feet are available in the Rubber Feet Kit, spare part number L17271-001.

3. Remove the four Phillips M2.5 × 5.0 screws **(2)** that secure the bottom cover to the computer.

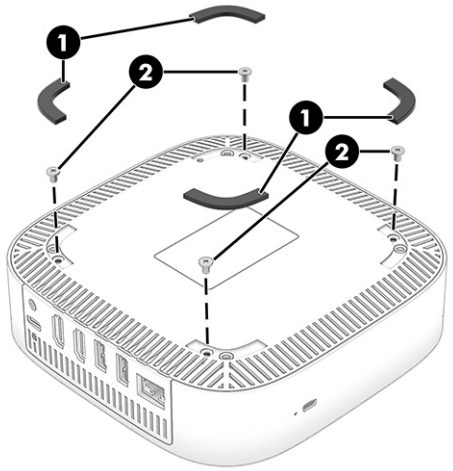

4. Use a case utility tool or similar thin plastic tool **(1)** to separate the front edge of the bottom cover **(2)** from the computer.
5. Remove the bottom cover **(3)**.

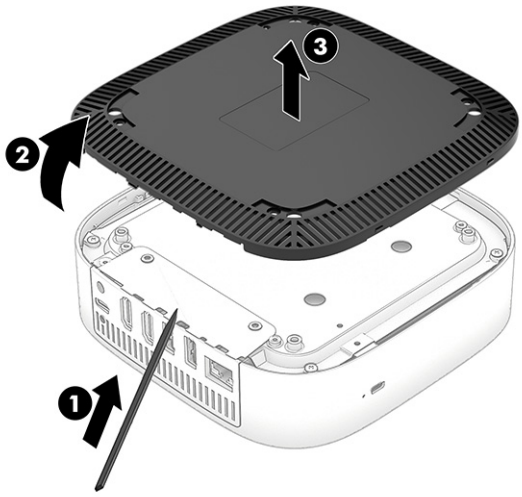

To install the bottom cover, reverse the removal procedures.

I/O side frame

To remove the I/O side frame, use this procedure and illustration.

Table 5-2 I/O side frame description and part number

Description	Spare part number
I/O side frame	N57808-001

Before removing the I/O side frame, follow these steps:

1. Prepare the computer for disassembly (Preparation for disassembly on page 22).
2. Remove the bottom cover (Bottom cover on page 22).

Remove the I/O side frame:

1. Remove the two Phillips M2.5 × 5.0 screws **(1)** that secure the I/O side frame to the computer.
2. Detach the bottom shield rear protective strip **(2)** from the I/O side frame and bottom shield. The protective strip is attached with double-sided adhesive.

   The bottom shield rear protective strip is included in the Mylar Kit, spare part number L20217-001.
3. Remove the I/O side frame **(3)** by swinging it up and out of the computer.

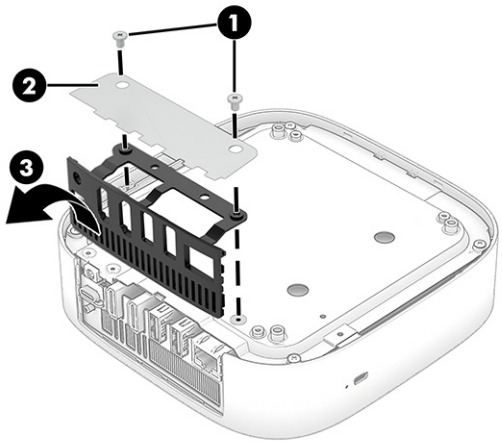

To install the I/O side frame, reverse the removal procedures.

Bottom shield

To remove the bottom shield, use this procedure and illustration.

Table 5-3 Bottom shield description and part number

Description	Spare part number
Bottom shield	M41139-001

Before removing the bottom shield, follow these steps:

1. Prepare the computer for disassembly (Preparation for disassembly on page 22).
2. Remove the bottom cover (Bottom cover on page 22).

3. Remove the I/O side frame (I/O side frame on page 23).

Remove the bottom shield:

1. Remove the four Phillips M2.5 × 5.0 screws **(1)** that secure the bottom shield to the computer.
2. Detach the bottom shield front protective strip **(2)** and the bottom shield padding **(3)** from the bottom shield. The protective strip is attached with double-sided adhesive.
3. Release the bottom shield **(4)** as far as the power connector cable will allow.
4. Disconnect the power connector cable **(5)** from the system board connector.

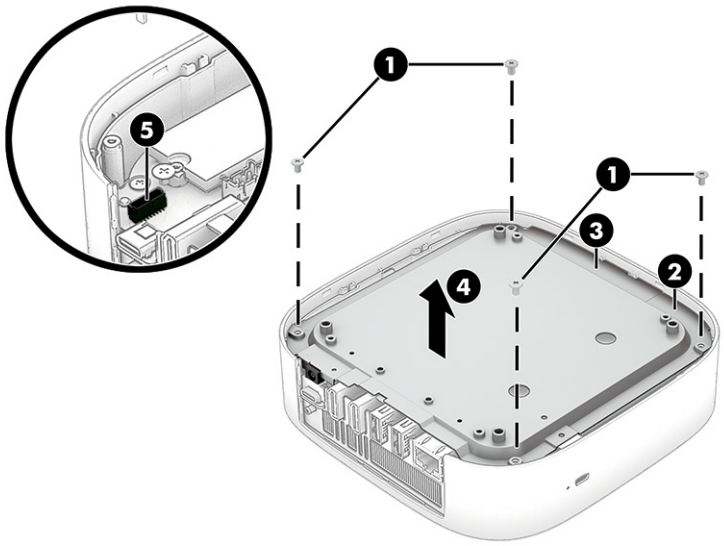

5. Remove the bottom shield.

To install the bottom shield, reverse the removal procedures.

Power connector cable

To remove the power connector cable, use these procedures and illustrations.

Table 5-4 Power connector cable description and part number

Description	Spare part number
Power connector cable	L17259-001

Before removing the power connector cable, follow these steps:

1. Prepare the computer for disassembly (Preparation for disassembly on page 22).
2. Remove the bottom cover (Bottom cover on page 22).
3. Remove the I/O side frame (I/O side frame on page 23).
4. Remove the bottom shield (Bottom shield on page 24).

Remove the power connector cable:

1. Turn the bottom shield right-side up with the rear panel toward you.
2. Remove the two Phillips M2.5 × 5.0 screws **(1)** that secure the power connector cable to the bottom shield.
3. Remove the power connector cable bracket **(2)**.

   The power connector cable bracket is available using spare part number M42090-001.
4. Remove the power connector cable **(3)**.
5. Remove the power connector cable bracket and gasket **(4)**. The bracket with gasket is available using spare part number L17265-001.

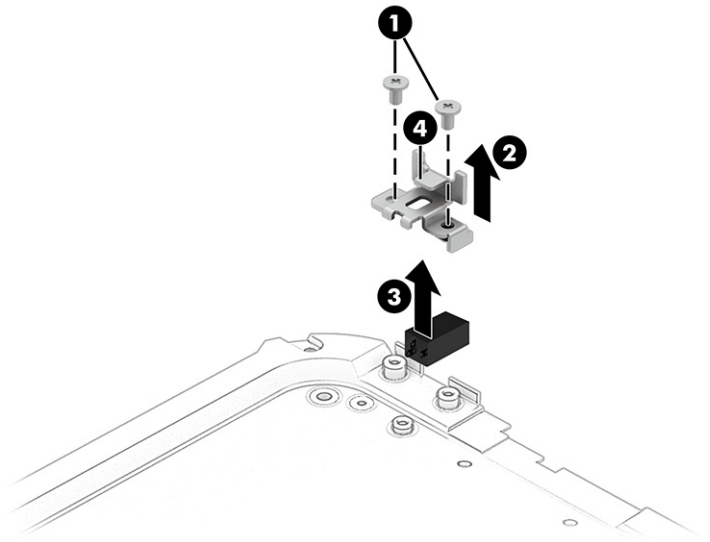

To install the power connector cable, reverse this procedure.

WLAN module

To remove the WLAN module, use this procedure and illustration.

Table 5-5 WLAN module description and part number

Description	Spare part number
WLAN module (Intel AX211 Wi-Fi 6E Bluetooth 5.3 WLAN)	M53366-005

IMPORTANT: To prevent an unresponsive system, replace the wireless module only with a wireless module authorized for use in the computer by the governmental agency that regulates wireless devices in your country or region. If you replace the module and then receive a warning message, remove the module to restore device functionality, and then contact technical support.

Before removing the WLAN module, follow these steps:

1. Prepare the computer for disassembly (Preparation for disassembly on page 22).

2. Remove the bottom cover (Bottom cover on page 22).
3. Remove the I/O side frame (I/O side frame on page 23).
4. Remove the bottom shield (Bottom shield on page 24).

Remove the WLAN module:

1. Disconnect the WLAN antenna cables **(1)** from the WLAN module terminals.
2. Remove the Phillips M2.0 × 3.0 screw **(2)** that secures the WLAN module to the system board. The WLAN module tilts up.
3. Remove the WLAN module **(3)** by pulling the module away from the slot at an angle.

NOTE: WLAN modules are notched to prevent incorrect installation.

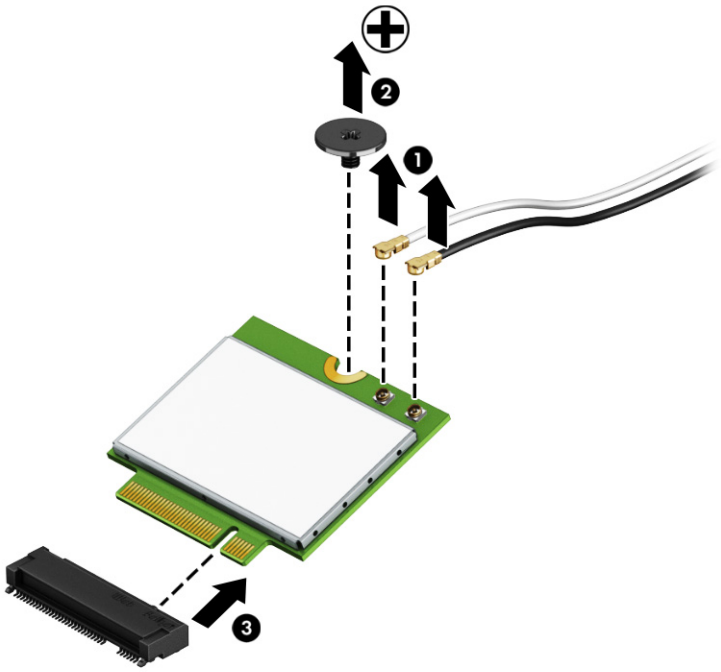

4. If the WLAN antenna is not connected to the terminal on the WLAN module, install a protective sleeve on the antenna connector, as shown in the following illustration.

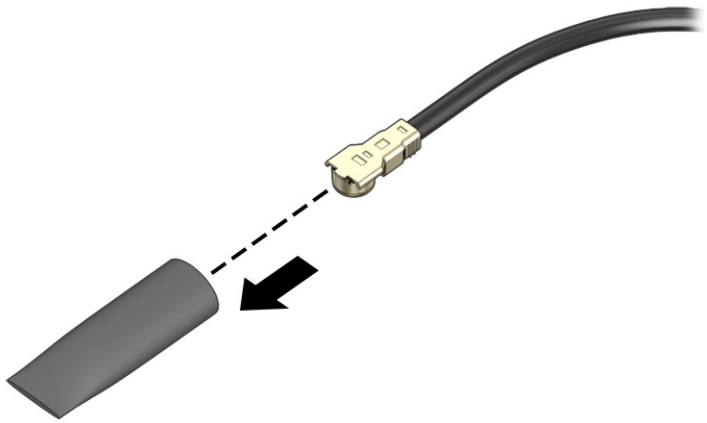

To install the WLAN module, reverse this procedure.

Solid-state drive

To remove the solid-state drive, use this procedure and illustration.

Table 5-6 **Solid-state drive description and part number**

Description	Spare part number
Solid state drive (256 GB, M.2 2230)	M11042-005

Before removing the solid-state drive, follow these steps:

1. Prepare the computer for disassembly (Preparation for disassembly on page 22).
2. Remove the bottom cover (Bottom cover on page 22).
3. Remove the I/O side frame (I/O side frame on page 23).
4. Remove the bottom shield (Bottom shield on page 24).

Remove the solid-state drive:

1. Remove the Phillips M2.0 × 3.0 screw **(1)** that secures the solid-state drive to the system board.

2. Remove the solid-state drive **(2)** by sliding it away from the slot at an angle.

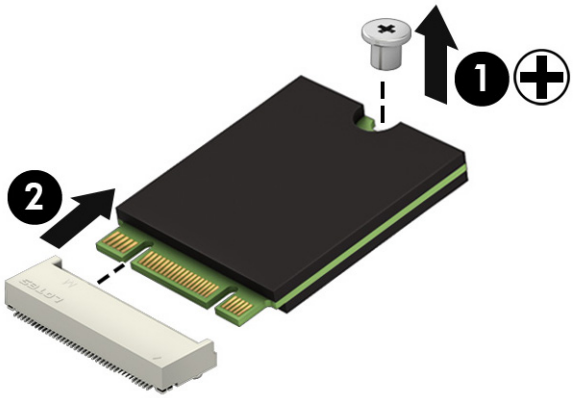

To install the solid-state drive, reverse this procedure.

Memory module

To remove the memory module, use this procedure and illustration.

Table 5-7 Memory module description and part numbers

Description	Spare part number
16 GB (DDR4, 3200 GHz, 1.2 V)	L67710-005
8 GB (DDR4, 3200 GHz, 1.2 V)	L46598-005
4 GB (DDR4, 3200 GHz, 1.2 V)	L83673-005

Before removing the memory module, follow these steps:

1. Prepare the computer for disassembly (Preparation for disassembly on page 22).
2. Remove the bottom cover (Bottom cover on page 22).
3. Remove the I/O side frame (I/O side frame on page 23).
4. Remove the bottom shield (Bottom shield on page 24).

Remove the memory module:

1. Insert a case utility tool or similar thin, plastic tool into the openings **(1)** on either side of the memory module shield and remove the shield **(2)**. The memory module shield is available using spare part number L17264-001.

NOTE: When installing the memory module shield, be sure that the edges of the shield fit securely into the retention clips **(3)** built into the system board.

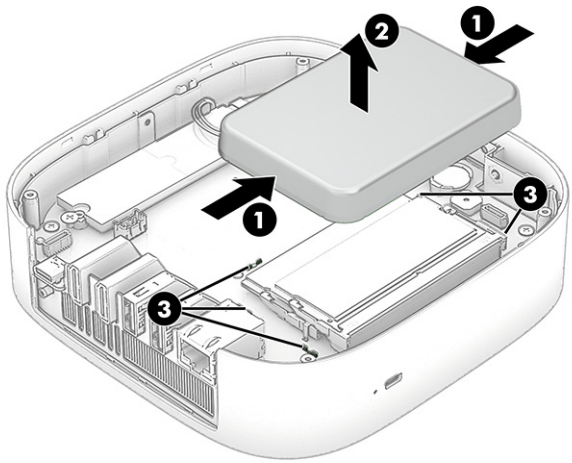

2. Spread the two retention clips outward **(1)** until the memory module tilts up at a 45° angle, and then remove the module **(2)**. Use the same procedure to remove all memory modules.

IMPORTANT: To prevent damage to the memory module, hold the memory module by the edges only. Do not touch the components on the memory module. Place it in an electrostatic-safe container.

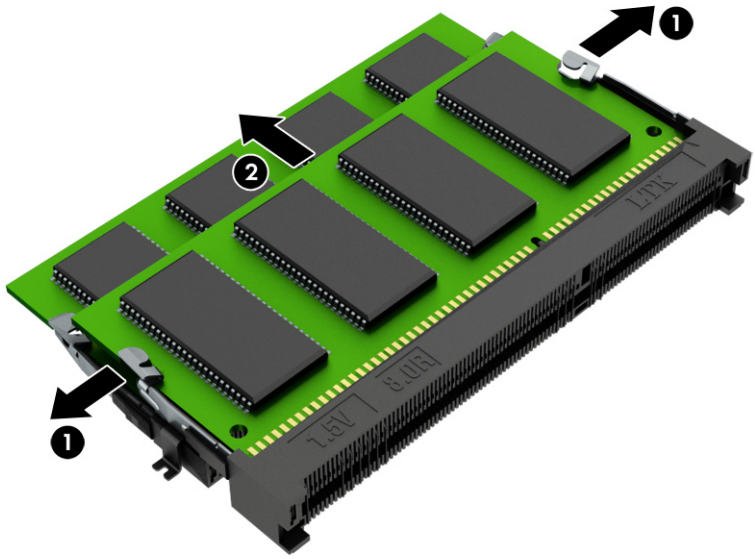

To install a memory module, reverse this procedure.

System board

To remove the system board, use these procedures and illustrations.

Table 5-8 **System board descriptions and part numbers**

Description	Spare part number
System board (includes the processor, RTC battery, replacement thermal material, a graphics subsystem with UMA memory, and the Chrome operating system)	
Intel Core i7-1365U processor	N57817-001
Intel Core i5-1345U processor	N57816-001
Intel Core i5-1345U processor and 64 GB of eMMC storage	N57820-001
Intel Core i5-1335U processor	N57815-001
Intel Core i3-1315U processor	N57814-001
Intel Core i3-1315U processor and 64 GB of eMMC storage	N57819-001
Intel Celeron 7305 processor	N57813-001
Intel Celeron 7305 processor and 64 GB of eMMC storage	N57818-001

Before removing the system board, follow these steps:

1. Prepare the computer for disassembly (Preparation for disassembly on page 22).
2. Remove the bottom cover (Bottom cover on page 22).
3. Remove the I/O side frame (I/O side frame on page 23).
4. Remove the bottom shield (Bottom shield on page 24).

When you replace the system board, be sure to remove the following components from the defective system board and install them on the replacement system board:

- WLAN module (see WLAN module on page 26)
- Solid-state drive (see Solid-state drive on page 28)
- Memory module and shield (see Memory module on page 29)
- Fan (see Fan on page 33)
- Heat sink (see Heat sink on page 33)

Remove the system board:

1. Disconnect the WLAN antenna cables **(1)** from the WLAN module terminals.

2. Disconnect the power button board cable **(2)** from the system board.

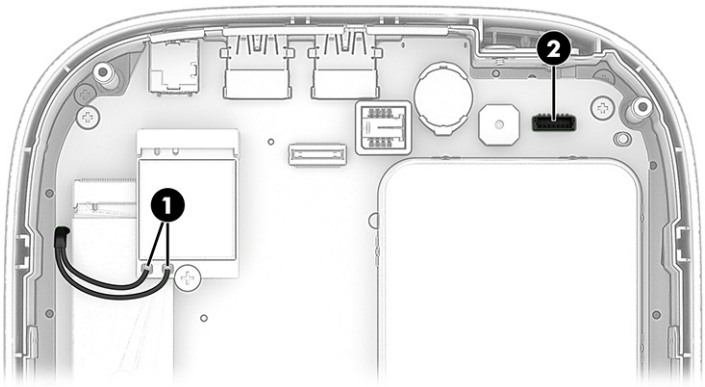

3. Remove the four Phillips M2.5 × 5.0 screws that secure the system board to the top cover.

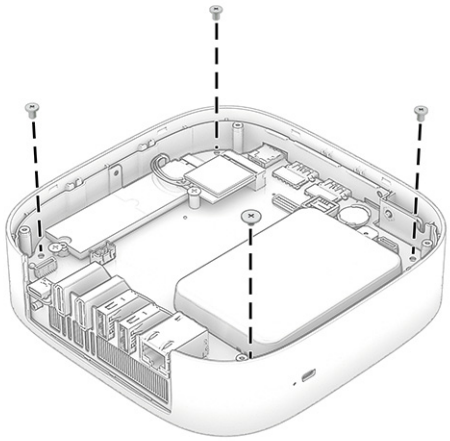

4. Lift the rear edge of the system board **(1)** until it rests at an angle.
5. Remove the system board **(2)** by sliding it forward at an angle.

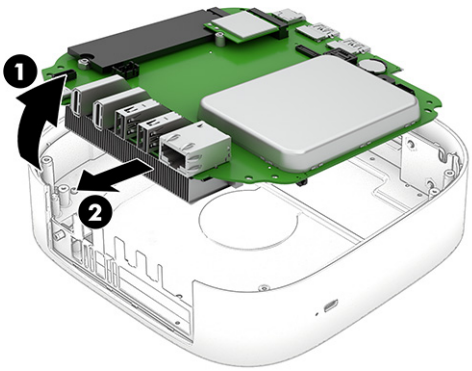

To install the system board, reverse this procedure.

Fan

To remove the fan, use these procedures and illustrations.

Table 5-9 **Fan description and part number**

Description	Spare part number
Fan (includes cable)	N57810-001

Before removing the fan, follow these steps:

1. Prepare the computer for disassembly (Preparation for disassembly on page 22).
2. Remove the bottom cover (Bottom cover on page 22).
3. Remove the I/O side frame (I/O side frame on page 23).
4. Remove the bottom shield (Bottom shield on page 24).
5. Remove the system board (System board on page 30).

Remove the fan:

1. Position the system board upright with the front toward you.
2. Disconnect the fan cable **(1)** from the system board.
3. Remove the two Phillips M2.0 × 4.0 screws **(2)** that secure the fan to the system board.
4. Remove the fan **(3)**.

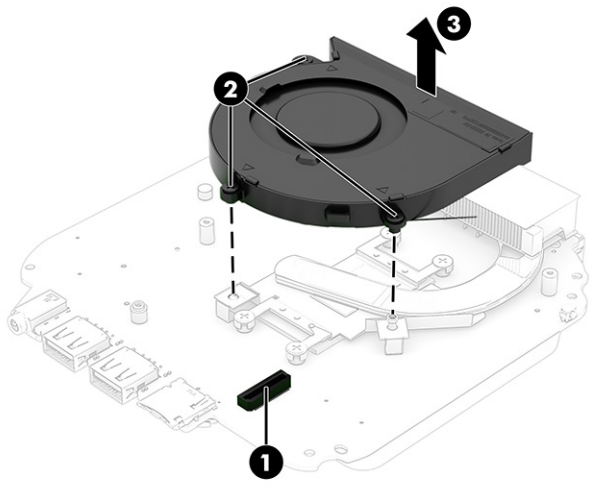

To install the fan, reverse this procedure.

Heat sink

To remove the heat sink, use these procedures and illustrations.

Table 5-10 **Heat sink description and part number**

Description	Spare part number
Heat sink (15 W, includes replacement thermal material)	N57809-001

Before removing the heat sink, follow these steps:

1. Prepare the computer for disassembly (Preparation for disassembly on page 22).
2. Remove the bottom cover (Bottom cover on page 22).
3. Remove the I/O side frame (I/O side frame on page 23).
4. Remove the bottom shield (Bottom shield on page 24).
5. Remove the system board (System board on page 30).
6. Remove the fan (Fan on page 33).

Remove the heat sink:

1. Remove the four Phillips M2.0 × 4.0 screws **(1)** that secure the heat sink to the system board.
2. Remove the heat sink **(2)**.

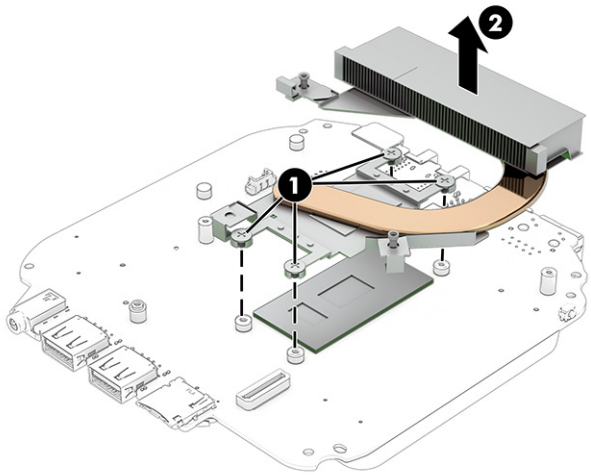

Each time the heat sink is removed, thoroughly clean the thermal material from the processor component **(1)** and the surface of the heat sink **(2)**. Replacement thermal material is included with the heat sink and system board spare part kits.

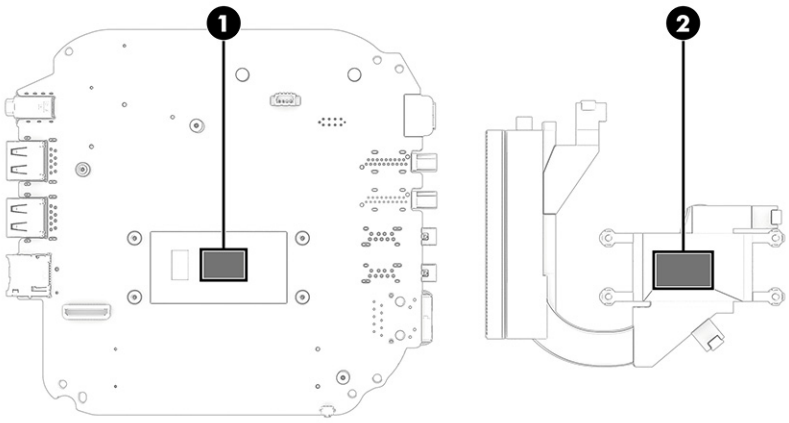

To install the heat sink, reverse this procedure.

Top shield

To remove the top shield, use this procedure and illustration.

Table 5-11 Top shield description and part number

Description	Spare part number
Top shield (includes wireless antenna)	N57807-001

1. Prepare the computer for disassembly (Preparation for disassembly on page 22).
2. Remove the bottom cover (Bottom cover on page 22).
3. Remove the I/O side frame (I/O side frame on page 23).
4. Remove the bottom shield (Bottom shield on page 24).
5. Remove the system board (System board on page 30).

Remove the top shield:

1. Remove the four Phillips M2.5 × 5.0 screws **(1)** that secure the top shield to the top cover.
2. Lift the rear edge of the top shield **(2)** until it rests at an angle.

3. Remove the top shield **(3)**.

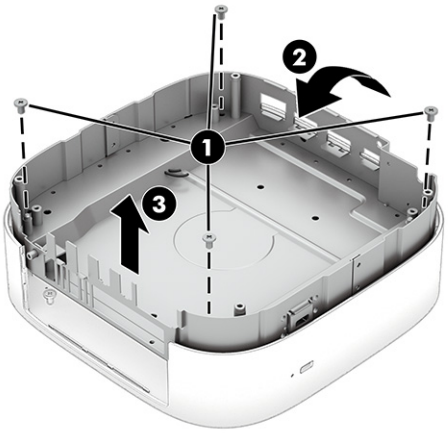

To install the top shield, reverse this procedure.

Power button board

To remove the power button board, use these procedures and illustrations.

Table 5-12 Power button board description and part number

Description	Spare part number
Power button board	M24724-001

Before removing the power button board, follow these steps:

1. Prepare the computer for disassembly (Preparation for disassembly on page 22).
2. Remove the bottom cover (Bottom cover on page 22).
3. Remove the I/O side frame (I/O side frame on page 23).
4. Remove the bottom shield (Bottom shield on page 24).
5. Remove the system board (System board on page 30).
6. Remove the top shield (Top shield on page 35).

Remove the power button board:

1. Remove the two Phillips M2.0 × 3.0 broad head screws **(1)** that secure the power button board to the top shield.
2. Remove the power button board **(2)**.

3. To replace the power button board cable, disconnect the cable from the connector **(3)** on the power button board. The power button board cable is available using spare part number M42089-001.

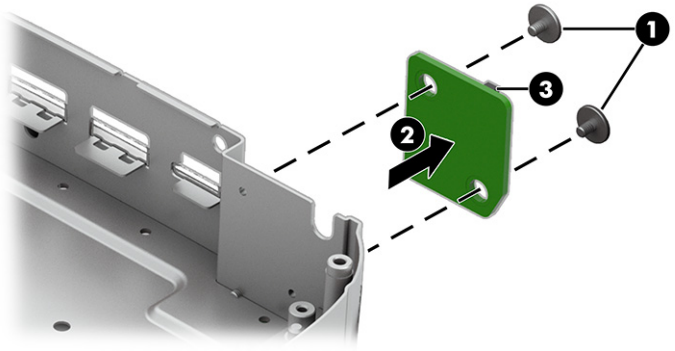

To install the power button board, reverse this procedure.

6 Backing up, resetting, and recovering

This chapter provides information about the standard procedures of backing up your personal data, resetting your computer to original factory conditions, and recovering your operating system.

Backing up

You can back up your data to an optional USB flash drive or SD memory card or through Google Drive™.

For detailed information about creating a backup, go to http://www.support.google.com.

Resetting

A factory reset erases the information on your computer hard drive, including files in the Downloads folder. Before you reset, back up your files to an optional USB flash drive, to an SD memory card, or through Google Drive. The factory reset will not delete your files at these locations.

You might want to reset your computer in the following circumstances:

- You see the message "Reset this Chrome device."
- You are having problems with your user profile or settings.
- You restarted your computer, and it still doesn't work properly.
- You want to change the owner of your computer.

To reset your computer:

1. Under the **Settings** menu, select **Advanced**.
2. In the **Powerwash** section, select **Powerwash**.
3. Select **Restart**.
4. In the window that appears, select **Powerwash**, and then select **Continue**.
5. Follow the on-screen instructions to reset your computer, and sign in with your Google Account.

> **NOTE:** The account you sign in with after you reset your computer is recognized as the owner account.

6. After you complete the reset, you can set up your computer and check to see whether the problem is fixed.

Recovering

When your ChromeOS™ doesn't work properly, you can perform a recovery. A recovery reinstalls the operating system, software programs, and original factory settings. It deletes locally saved files and

saved networks for all accounts. A system recovery does not affect Google Accounts and data synced to Google Drive.

IMPORTANT: Recovery permanently erases everything on your computer hard drive, including your downloaded files. If possible, back up your files before you recover your computer.

NOTE: For more information about performing a system recovery on your computer, go to http://www.support.google.com.

Before you begin the recovery process, you need the following prerequisites:

- A USB flash drive or SD memory card with a capacity of 4 GB or greater. All data is erased from this storage device when the recovery media is created, so back up all files from the device before you begin.
- A computer with internet access. You must also have administrative rights to the computer.
- A computer AC adapter. The computer must be plugged into AC power during recovery.
- The "ChromeOS is missing or damaged" screen displaying on your computer. If this message is not already displayed:
  - Turn on the computer, press and hold the esc+f3 keys, and then press the power button. The computer restarts, and the screen shows the "ChromeOS is missing or damaged" screen.

Option 1: Recovering using an internet connection

Use these instructions to recover the Chrome operating system on your computer without recovery media:

1. Disconnect any external devices connected to your computer, plug in the power cord, and then turn on the computer.
2. To enter recovery mode, press and hold the esc+f3 keys, and then press the power button. When the "ChromeOS is missing or damaged" screen appears, select **Recover using internet connection** and follow the on-screen instructions.

   NOTE: The computer must have internet access.

3. When the "System Recovery is complete" message appears, reboot your computer.

The computer restarts with ChromeOS reinstalled.

Option 2: Installing the Chromebook Recovery Utility

The Chromebook™ Recovery Utility recovers the original operating system and software programs that were installed at the factory. You can install this utility from the Chrome Web Store on any computer.

NOTE: Use this option if you do not have Internet access on your computer.

To install the Chromebook Recovery Utility:

- Open the Chrome Web Store, search for `chrome recovery`, select **Chromebook Recovery Utility** from the Apps list, and follow the on-screen instructions.

Creating recovery media

You can use recovery media to recover the original operating system and software programs that were installed at the factory.

To create recovery media:

1. Turn on a computer that has internet access.

NOTE: You must have administrative rights to the computer.

2. Select the **Launcher** icon, and then select **All Apps**.
3. In the Apps window, select **Recovery**, and then select **Get started**.
4. Follow the on-screen instructions to create the recovery media.

NOTE: All data and partitions on your recovery media will be deleted. Do not remove the USB flash drive or SD memory card until the process is complete.

Recovering the Chrome operating system with recovery media

Use these instructions to recover the Chrome operating system on your computer using the recovery media that you created.

1. Disconnect any external devices connected to your computer, plug in the power cord, and then turn on the computer.
2. To enter recovery mode, press and hold esc+f3, and then press the power button. When the "ChromeOS is missing or damaged" screen appears, insert the recovery media into your computer. The recovery process begins immediately.
3. Wait while Chrome verifies the integrity of the recovery media.

NOTE: If you need to cancel the recovery during the verification process, press and hold the power button until the computer turns off. Do not disrupt the system recovery process after the verification step is complete.

NOTE: If an error message is displayed, you might need to run the Chrome Recovery Utility again or use a different USB flash drive or SD memory card.

4. When the "System Recovery is complete" message appears, remove the recovery media.

   The computer restarts with ChromeOS reinstalled.

Setting up your computer after a reset or recovery

After a reset or recovery is complete, perform the initial setup process.

For details about setting up the computer, go to http://www.support.google.com.

Erasing and reformatting the recovery media

When you create recovery media, the USB flash drive or SD memory card is formatted as a recovery tool. After recovery, you must erase the recovery media to reuse your storage device. Follow these steps to use the Chromebook Recovery Utility to erase the recovery media.

1. Select the **Launcher** icon, and then select **All Apps**.
2. In the apps window, select **Recovery**.
3. Select the **Settings** icon, and then select **Erase recovery media**.
4. Select the USB flash drive or SD memory card that you inserted, select **Continue**, and then select **Erase now**.
5. After the recovery media is erased, select **Done** to close the Chromebook Recovery Utility, and then remove the USB flash drive or SD memory card.

   The media is ready to be formatted using a formatting tool provided by your operating system.

7 Statement of memory volatility

For general information regarding nonvolatile memory in HP business computers, and to restore nonvolatile memory that can contain personal data after the system has been turned off and the hard drive has been removed, use these instructions.

HP business computer products that use Intel®-based or AMD®-based system boards contain volatile DDR memory. The amount of nonvolatile memory present in the system depends upon the system configuration. Intel-based and AMD-based system boards contain nonvolatile memory subcomponents as originally shipped from HP, with the following assumptions:

- No subsequent modifications were made to the system.
- No applications, features, or functionality were added to or installed on the system.

Following system shutdown and removal of all power sources from an HP business computer system, personal data can remain on volatile system memory (DIMMs) for a finite period of time and also remains in nonvolatile memory. Use the following steps to remove personal data from the computer, including the nonvolatile memory found in Intel-based and AMD-based system boards.

NOTE: If your tablet has a keyboard base, connect to the keyboard base before beginning steps in this chapter.

Current BIOS steps

Use these instructions to restore nonvolatile memory.

1. Follow these steps to restore the nonvolatile memory that can contain personal data. Restoring or reprogramming nonvolatile memory that does not store personal data is neither necessary nor recommended.

   a. Turn on or restart the computer, and then quickly press esc.

   NOTE: If the system has a BIOS administrator password, type the password at the prompt.

   b. Select **Main**, select **Apply Factory Defaults and Exit**, and then select **Yes** to load defaults. The computer restarts.

   c. During the restart, press esc while the "Press the ESC key for Startup Menu" message is displayed at the bottom of the screen.

   NOTE: If the system has a BIOS administrator password, type the password at the prompt.

   d. Select the **Security** menu, select **Restore Security Settings to Factory Defaults**, and then select **Yes** to restore security level defaults. The computer restarts.

   e. During the restart, press esc while the "Press the ESC key for Startup Menu" message is displayed at the bottom of the screen.

   NOTE: If the system has a BIOS administrator password, type the password at the prompt.

f. If an asset or ownership tag is set, select the **Security** menu and scroll down to the **Utilities** menu. Select **System IDs**, and then select **Asset Tracking Number**. Clear the tag, and then make the selection to return to the prior menu.

g. If a DriveLock password is set, select the **Security** menu, and scroll down to **Hard Drive Utilities** under the **Utilities** menu. Select **Hard Drive Utilities**, select **DriveLock**, and then clear the check box for **DriveLock password on restart**. Select **OK** to proceed.

h. Select the **Main** menu, and then select **Reset BIOS Security to factory default**. Select **Yes** at the warning message. The computer restarts.

i. During the restart, press esc while the "Press the ESC key for Startup Menu" message is displayed at the bottom of the screen.

NOTE: If the system has a BIOS administrator password, type the password at the prompt.

j. Select the **Main** menu, select **Apply Factory Defaults and Exit**, select **Yes** to save changes and exit, and then select **Shutdown**.

k. Restart the system. If the system has a Trusted Platform Module (TPM), fingerprint reader, or both, one or two prompts will appear—one to clear the TPM and the other to Reset Fingerprint Sensor. Press or tap f1 to accept or f2 to reject.

l. Remove all power and system batteries for at least 24 hours.

2. Complete one of the following:

- Remove and retain the storage drive.

  – or –

- Clear the drive contents by using a third-party utility designed to erase data from an SSD.

  – or –

- Clear the contents of the drive by using the following BIOS Setup Secure Erase command option steps:

NOTE: If you clear data using Secure Erase, you cannot recover it.

a. Turn on or restart the computer, and then quickly press esc.

b. Select the **Security** menu and scroll down to the esc menu.

c. Select **Hard Drive Utilities**.

d. Under **Utilities**, select **Secure Erase**, select the hard drive storing the data you want to clear, and then follow the on-screen instructions to continue.

   – or –

   Clear the contents of the drive using the following Disk Sanitizer commands steps:

   i. Turn on or restart the computer, and then quickly press esc.

   ii. Select the **Security** menu and scroll down to the **Utilities** menu.

   iii. Select **Hard Drive Utilities**.

iv. Under **Utilities**, select **Disk Sanitizer**, select the hard drive with the data that you want to clear, and then follow the on-screen instructions to continue.

NOTE: The amount of time it takes for Disk Sanitizer to run can take several hours. Plug the computer into an AC outlet before starting.

Nonvolatile memory usage

Use this table to troubleshoot nonvolatile memory usage.

Table 7-1 Troubleshooting steps for nonvolatile memory usage

Description	Volatility description	Storage user data	How to erase
Primary storage device, holds the OS, applications, and application settings	Non-volatile, 8-256 GB of eMMC or NVMe SSD storage, removable	Yes[1]	Follow instructions below under "Erase the Primary Storage Device"
System memory (RAM), holds transient data during system operation	Volatile, SODIMM socket. Removable (4 GB/8 GB/16 GB)	Yes	Unplug unit from power
Permanent system BIOS settings	Non-volatile; 16 KB; stored	No[2]	Follow instructions below under "Clearing BIOS Settings"
System boot ROM (BIOS)	Non-volatile memory, 128 Mbit (16 MB) socketed, removable	No	Download the latest BIOS for your model from the HP website and follow the instructions to flash the BIOS that are on the website
RTC (CMOS) RAM	Volatile memory, 256 bytes located in AMD embedded System on Chip (SoC)	No	Unplug unit from main power, remove top cover and press **Clear CMOS** button
Keyboard/mouse (ROM)	Non-volatile, 2 KB embedded in the super I/O controller (SIO2)	Yes	N/A
Keyboard/mouse (RAM)	Volatile, 256 bytes embedded in the super I/O controller (SIO2)	No	Unplug unit from main power
LOM EEPROM	Non-volatile, 2 MB embedded in LAN controller	No	N/A
Trusted Platform Module (TPM)	Non-volatile; 51 KB ROM for firmware and 38 KB system parametric data	No[3]	Follow instructions below under "Clearing TPM"

[1] Under typical operation, the only user data stored on the primary storage device are preferences for device configuration and settings for connections. However, the administrator can configure the system to allow users to store data locally.

[2] Only user data potentially stored in BIOS Settings are the ownership and asset tags, administrator password, and startup password.

[3] The Trusted Platform Module may contain encrypted passwords or certificates generated from user or administrator input.

Questions and answers

Use this section to answer your questions about nonvolatile memory.

1. **How can the BIOS settings be restored (returned to factory settings)?**

IMPORTANT: The restore defaults feature does not securely erase any information on your hard drive. See question and answer 6 for steps to securely erase information.

The restore defaults feature does not reset the Custom Secure Boot keys. See question and answer 7 for information about resetting the keys.

   a. Turn on or restart the computer, and then quickly press esc.

   b. Select **Main**, and then select **Apply Factory Defaults and Exit**.

   c. Follow the on-screen instructions.

   d. Select **Main**, select **Save Changes and Exit**, and then follow the on-screen instructions.

2. **What is a UEFI BIOS, and how is it different from a legacy BIOS?**

   The Unified Extensible Firmware Interface (UEFI) BIOS is an industry-standard software interface between the platform firmware and an operating system (OS). It replaces the older BIOS architecture but supports much of the legacy BIOS functionality.

   Like the legacy BIOS, the UEFI BIOS provides an interface to display the system information and configuration settings and to change the configuration of your computer before an OS is loaded. BIOS provides a secure runtime environment that supports a Graphic User Interface (GUI). In this environment, you can use either a pointing device (touch screen, touchpad, pointing stick, or USB mouse) or the keyboard to navigate and make menu and configuration selections. The UEFI BIOS also contains basic system diagnostics.

   The UEFI BIOS provides functionality beyond that of the legacy BIOS. In addition, the UEFI BIOS works to initialize the computer's hardware before loading and executing the OS; the runtime environment allows the loading and execution of software programs from storage devices to provide more functionality, such as advanced hardware diagnostics (with the ability to display more detailed system information) and advanced firmware management and recovery software.

   HP has provided options in Computer Setup (BIOS) to allow you to run in legacy BIOS, if required by the operating system. Examples of this requirement would be if you upgrade or downgrade the OS.

3. **Where is the UEFI BIOS located?**

   The UEFI BIOS is located on a flash memory chip. You must use a utility to write to the chip.

4. **What kind of configuration data is stored on the DIMM Serial Presence Detect (SPD) memory module? How would this data be written?**

   The DIMM SPD memory contains information about the memory module, such as size, serial number, data width, speed and timing, voltage, and thermal information. This information is written by the module manufacturer and stored on an EEPROM. You cannot write to this EEPROM when the memory module is installed in a computer. Third-party tools do exist that can write to the EEPROM when the memory module is not installed in a computer. Various third-party tools are available to read SPD memory.

5. **What is meant by "Restore the nonvolatile memory found in Intel-based system boards"?**

   This message relates to clearing the Real Time Clock (RTC) CMOS memory that contains computer configuration data.

6. **How can the BIOS security be reset to factory defaults and erase the data?**

IMPORTANT: Resetting results in the loss of information.

These steps do not reset Custom Secure Boot Keys. See question and answer 7 for information about resetting the keys.

a. Turn on or restart the computer, and then quickly press esc.

b. Select **Main**, and then select **Reset Security to Factory Defaults**.

c. Follow the on-screen instructions.

d. Select **Main**, select **Save Changes and Exit**, and then follow the on-screen instructions.

7. **How can the Custom Secure Boot Keys be reset?**

Secure Boot is a feature to ensure that only authenticated code can start on a platform. If you enabled Secure Boot and created Custom Secure Boot Keys, disabling Secure Boot does not clear the keys. You must also select to clear the Custom Secure Boot Keys. Use the same Secure Boot access procedure that you used to create the Custom Secure Boot Keys, but select to clear or delete all Secure Boot Keys.

a. Turn on or restart the computer, and then quickly press esc.

b. Select the **Security** menu, select **Secure Boot Configuration**, and then follow the on-screen instructions.

c. At the **Secure Boot Configuration** window, select **Secure Boot**, select **Clear Secure Boot Keys**, and then follow the on-screen instructions to continue.

Using HP Sure Start (select products only)

Select computer models are configured with HP Sure Start, a technology that continuously monitors your computer's BIOS for attacks or corruption.

If the BIOS becomes corrupted or is attacked, HP Sure Start restores the BIOS to its previously safe state, without user intervention. Those select computer models ship with HP Sure Start configured and enabled. HP Sure Start is configured and already enabled so that most users can use the HP Sure Start default configuration. Advanced users can customize the default configuration.

To access the latest documentation on HP Sure Start, go to http://www.hp.com/support.

8 Statement of memory volatility

For general information regarding nonvolatile memory in HP business computers, and to restore nonvolatile memory that can contain personal data after the system has been turned off and the hard drive has been removed, use these instructions.

HP business computer products that use Intel®-based or AMD®-based system boards contain volatile DDR memory. The amount of nonvolatile memory present in the system depends upon the system configuration. Intel-based and AMD-based system boards contain nonvolatile memory subcomponents as originally shipped from HP, with the following assumptions:

- No subsequent modifications were made to the system.
- No applications, features, or functionality were added to or installed on the system.

Following system shutdown and removal of all power sources from an HP business computer system, personal data can remain on volatile system memory (DIMMs) for a finite period of time and also remains in nonvolatile memory. Use the following steps to remove personal data from the computer, including the nonvolatile memory found in Intel-based and AMD-based system boards.

NOTE: If your tablet has a keyboard base, connect to the keyboard base before beginning steps in this chapter.

Current BIOS steps

Use these instructions to restore nonvolatile memory.

1. Follow these steps to restore the nonvolatile memory that can contain personal data. Restoring or reprogramming nonvolatile memory that does not store personal data is neither necessary nor recommended.

   a. Turn on or restart the computer, and then quickly press esc.

   NOTE: If the system has a BIOS administrator password, type the password at the prompt.

   b. Select **Main**, select **Apply Factory Defaults and Exit**, and then select **Yes** to load defaults. The computer restarts.

   c. During the restart, press esc while the "Press the ESC key for Startup Menu" message is displayed at the bottom of the screen.

   NOTE: If the system has a BIOS administrator password, type the password at the prompt.

   d. Select the **Security** menu, select **Restore Security Settings to Factory Defaults**, and then select **Yes** to restore security level defaults. The computer restarts.

   e. During the restart, press esc while the "Press the ESC key for Startup Menu" message is displayed at the bottom of the screen.

   NOTE: If the system has a BIOS administrator password, type the password at the prompt.

f. If an asset or ownership tag is set, select the **Security** menu and scroll down to the **Utilities** menu. Select **System IDs**, and then select **Asset Tracking Number**. Clear the tag, and then make the selection to return to the prior menu.

g. If a DriveLock password is set, select the **Security** menu, and scroll down to **Hard Drive Utilities** under the **Utilities** menu. Select **Hard Drive Utilities**, select **DriveLock**, and then clear the check box for **DriveLock password on restart**. Select **OK** to proceed.

h. Select the **Main** menu, and then select **Reset BIOS Security to factory default**. Select **Yes** at the warning message. The computer restarts.

i. During the restart, press esc while the "Press the ESC key for Startup Menu" message is displayed at the bottom of the screen.

NOTE: If the system has a BIOS administrator password, type the password at the prompt.

j. Select the **Main** menu, select **Apply Factory Defaults and Exit**, select **Yes** to save changes and exit, and then select **Shutdown**.

k. Restart the system. If the system has a Trusted Platform Module (TPM), fingerprint reader, or both, one or two prompts will appear—one to clear the TPM and the other to Reset Fingerprint Sensor. Press or tap f1 to accept or f2 to reject.

l. Remove all power and system batteries for at least 24 hours.

2. Complete one of the following:

- Remove and retain the storage drive.

  – or –

- Clear the drive contents by using a third-party utility designed to erase data from an SSD.

  – or –

- Clear the contents of the drive by using the following BIOS Setup Secure Erase command option steps:

NOTE: If you clear data using Secure Erase, you cannot recover it.

a. Turn on or restart the computer, and then quickly press esc.

b. Select the **Security** menu and scroll down to the esc menu.

c. Select **Hard Drive Utilities**.

d. Under **Utilities**, select **Secure Erase**, select the hard drive storing the data you want to clear, and then follow the on-screen instructions to continue.

   – or –

   Clear the contents of the drive using the following Disk Sanitizer commands steps:

   i. Turn on or restart the computer, and then quickly press esc.

   ii. Select the **Security** menu and scroll down to the **Utilities** menu.

   iii. Select **Hard Drive Utilities**.

iv. Under **Utilities**, select **Disk Sanitizer**, select the hard drive with the data that you want to clear, and then follow the on-screen instructions to continue.

NOTE: The amount of time it takes for Disk Sanitizer to run can take several hours. Plug the computer into an AC outlet before starting.

Nonvolatile memory usage

Use this table to troubleshoot nonvolatile memory usage.

Table 8-1 Troubleshooting steps for nonvolatile memory usage

Description	Volatility description	Storage user data	How to erase
Primary storage device, holds the OS, applications, and application settings	Non-volatile, 8-256 GB of eMMC or NVMe SSD storage, removable	Yes[1]	Follow instructions below under “Erase the Primary Storage Device”
System memory (RAM), holds transient data during system operation	Volatile, SODIMM socket. Removable (4 GB/8 GB/16 GB)	Yes	Unplug unit from power
Permanent system BIOS settings	Non-volatile; 16 KB; stored	No[2]	Follow instructions below under “Clearing BIOS Settings”
System boot ROM (BIOS)	Non-volatile memory, 128 Mbit (16 MB) socketed, removable	No	Download the latest BIOS for your model from the HP website and follow the instructions to flash the BIOS that are on the website
RTC (CMOS) RAM	Volatile memory, 256 bytes located in AMD embedded System on Chip (SoC)	No	Unplug unit from main power, remove top cover and press **Clear CMOS** button
Keyboard/mouse (ROM)	Non-volatile, 2 KB embedded in the super I/O controller (SIO2)	Yes	N/A
Keyboard/mouse (RAM)	Volatile, 256 bytes embedded in the super I/O controller (SIO2)	No	Unplug unit from main power
LOM EEPROM	Non-volatile, 2 MB embedded in LAN controller	No	N/A
Trusted Platform Module (TPM)	Non-volatile; 51 KB ROM for firmware and 38 KB system parametric data	No[3]	Follow instructions below under “Clearing TPM”

[1] Under typical operation, the only user data stored on the primary storage device are preferences for device configuration and settings for connections. However, the administrator can configure the system to allow users to store data locally.

[2] Only user data potentially stored in BIOS Settings are the ownership and asset tags, administrator password, and startup password.

[3] The Trusted Platform Module may contain encrypted passwords or certificates generated from user or administrator input.

Questions and answers

Use this section to answer your questions about nonvolatile memory.

1. **How can the BIOS settings be restored (returned to factory settings)?**

IMPORTANT: The restore defaults feature does not securely erase any information on your hard drive. See question and answer 6 for steps to securely erase information.

The restore defaults feature does not reset the Custom Secure Boot keys. See question and answer 7 for information about resetting the keys.

   a. Turn on or restart the computer, and then quickly press esc.

   b. Select **Main**, and then select **Apply Factory Defaults and Exit**.

   c. Follow the on-screen instructions.

   d. Select **Main**, select **Save Changes and Exit**, and then follow the on-screen instructions.

2. **What is a UEFI BIOS, and how is it different from a legacy BIOS?**

   The Unified Extensible Firmware Interface (UEFI) BIOS is an industry-standard software interface between the platform firmware and an operating system (OS). It replaces the older BIOS architecture but supports much of the legacy BIOS functionality.

   Like the legacy BIOS, the UEFI BIOS provides an interface to display the system information and configuration settings and to change the configuration of your computer before an OS is loaded. BIOS provides a secure runtime environment that supports a Graphic User Interface (GUI). In this environment, you can use either a pointing device (touch screen, touchpad, pointing stick, or USB mouse) or the keyboard to navigate and make menu and configuration selections. The UEFI BIOS also contains basic system diagnostics.

   The UEFI BIOS provides functionality beyond that of the legacy BIOS. In addition, the UEFI BIOS works to initialize the computer's hardware before loading and executing the OS; the runtime environment allows the loading and execution of software programs from storage devices to provide more functionality, such as advanced hardware diagnostics (with the ability to display more detailed system information) and advanced firmware management and recovery software.

   HP has provided options in Computer Setup (BIOS) to allow you to run in legacy BIOS, if required by the operating system. Examples of this requirement would be if you upgrade or downgrade the OS.

3. **Where is the UEFI BIOS located?**

   The UEFI BIOS is located on a flash memory chip. You must use a utility to write to the chip.

4. **What kind of configuration data is stored on the DIMM Serial Presence Detect (SPD) memory module? How would this data be written?**

   The DIMM SPD memory contains information about the memory module, such as size, serial number, data width, speed and timing, voltage, and thermal information. This information is written by the module manufacturer and stored on an EEPROM. You cannot write to this EEPROM when the memory module is installed in a computer. Third-party tools do exist that can write to the EEPROM when the memory module is not installed in a computer. Various third-party tools are available to read SPD memory.

5. **What is meant by "Restore the nonvolatile memory found in Intel-based system boards"?**

   This message relates to clearing the Real Time Clock (RTC) CMOS memory that contains computer configuration data.

6. **How can the BIOS security be reset to factory defaults and erase the data?**

IMPORTANT: Resetting results in the loss of information.

These steps do not reset Custom Secure Boot Keys. See question and answer 7 for information about resetting the keys.

a. Turn on or restart the computer, and then quickly press esc.

b. Select **Main**, and then select **Reset Security to Factory Defaults**.

c. Follow the on-screen instructions.

d. Select **Main**, select **Save Changes and Exit**, and then follow the on-screen instructions.

7. **How can the Custom Secure Boot Keys be reset?**

Secure Boot is a feature to ensure that only authenticated code can start on a platform. If you enabled Secure Boot and created Custom Secure Boot Keys, disabling Secure Boot does not clear the keys. You must also select to clear the Custom Secure Boot Keys. Use the same Secure Boot access procedure that you used to create the Custom Secure Boot Keys, but select to clear or delete all Secure Boot Keys.

a. Turn on or restart the computer, and then quickly press esc.

b. Select the **Security** menu, select **Secure Boot Configuration**, and then follow the on-screen instructions.

c. At the **Secure Boot Configuration** window, select **Secure Boot**, select **Clear Secure Boot Keys**, and then follow the on-screen instructions to continue.

Using HP Sure Start (select products only)

Select computer models are configured with HP Sure Start, a technology that continuously monitors your computer's BIOS for attacks or corruption.

If the BIOS becomes corrupted or is attacked, HP Sure Start restores the BIOS to its previously safe state, without user intervention. Those select computer models ship with HP Sure Start configured and enabled. HP Sure Start is configured and already enabled so that most users can use the HP Sure Start default configuration. Advanced users can customize the default configuration.

To access the latest documentation on HP Sure Start, go to http://www.hp.com/support.

9 Specifications

This chapter provides specifications for your computer system.

Computer specifications

This section provides specifications for your computer. When traveling with your computer, the computer dimensions and weights, input power ratings, and operating specifications provide helpful information.

Table 9-1 Computer specifications

	Metric	U.S.
Dimensions		
Width	149.3 mm	5.9 in
Depth	149.3 mm	5.9 in
Height	40.0 mm	1.6 in
Weight	630.0 g	1.39 lb
Input power		
Operating voltage and current	19.5 V DC @ 3.33 A - 65 W	
	19.5 V DC @ 4.62 A - 90 W	
Temperature		
Operating	5°C to 35°C	41°F to 95°F
Nonoperating	-20°C to 60°C	-4°F to 140°F
Relative humidity (noncondensing)		
Operating	10% to 90%	
Nonoperating	5% to 95%	
Maximum altitude (unpressurized)		
Operating	-15 m to 3,048 m	-50 ft to 10,000 ft
Nonoperating	-15 m to 12,192 m	-50 ft to 40,000 ft

NOTE: Applicable product safety standards specify thermal limits for plastic surfaces. The device operates well within this range of temperatures.

Solid-state drive specifications

This section provides specifications for your solid-state drives.

Table 9-2 **Solid-state drive specifications**

	128 GB*	256 GB*	512 GB*
Dimensions			
Height	1.0 mm	1.0 mm	1.0 mm
Length	50.8 mm	50.8 mm	50.8 mm
Width	28.9 mm	28.9 mm	28.9 mm
Weight	< 10 g	< 10 g	< 10 g
Interface type	PCIe	PCIe	PCIe
Ready time, maximum (to not busy)	1.0 ms	1.0 ms	< 1.0 ms
Access times, logical	0.1 ms	0.1 ms	0.1 ms
Transfer rate			
Sequential read	up to 2150 MBps	up to 2150 MBps	up to 2150 MBps
Random read	Up to 300,000 IOPs	Up to 300,000 IOPs	Up to 300,000 IOPs
Sequential write	up to 1550 MBps	up to 1550 MBps	up to 1550 MBps
Random write	Up to 100,000 IOPs	Up to 100,000 IOPs	Up to 100,000 IOPs
Total logical sectors	234,447,581	468,883,296	1,000,215,216
Operating temperature	**0°C to 70°C** (32°F to 158°F)		

*1 GB = 1 billion bytes when referring to hard drive storage capacity. Actual accessible capacity is less. Actual drive specifications might differ slightly.

NOTE: Certain restrictions and exclusions apply. Contact support for details.

10 Power cord set requirements

This chapter provides power cord requirements for countries and regions.

The wide-range input feature of the computer permits it to operate from any line voltage from 100 V AC to 120 V AC, or from 220 V AC to 240 V AC.

The three-conductor power cord set included with the computer meets the requirements for use in the country or region where the equipment is purchased.

Power cord sets for use in other countries or regions must meet the requirements of the country and region where the computer is used.

Requirements for all countries

These power cord requirements are applicable to all countries and regions.

- The length of the power cord set must be at least **1.0 m** (3.3 ft) and no more than **2.0 m** (6.5 ft).
- All power cord sets must be approved by an acceptable accredited agency responsible for evaluation in the country or region where the power cord set will be used.
- The power cord sets must have a minimum current capacity of 10 A and a nominal voltage rating of 125 V AC or 250 V AC, as required by the power system of each country or region.
- The appliance coupler must meet the mechanical configuration of an EN 60 320/IEC 320 Standard Sheet C13 connector for mating with the appliance inlet on the back of the computer.

Requirements for specific countries and regions

To determine power cord requirements for specific countries and regions, use this table.

Table 10-1 Power cord requirements for specific countries and regions

Country/region	Accredited agency	Applicable note number
Argentina	IRAM	1
Australia	SAA	1
Austria	OVE	1
Belgium	CEBEC	1
Brazil	ABNT	1
Canada	CSA	2
Chile	IMQ	1
Denmark	DEMKO	1
Finland	FIMKO	1
France	UTE	1

Table 10-1 Power cord requirements for specific countries and regions (continued)

Country/region	Accredited agency	Applicable note number
Germany	VDE	1
India	BIS	1
Israel	SII	1
Italy	IMQ	1
Japan	JIS	3
Netherlands	KEMA	1
New Zealand	SANZ	1
Norway	NEMKO	1
People's Republic of China	CCC	4
Saudi Arabia	SASO	7
Singapore	PSB	1
South Africa	SABS	1
South Korea	KTL	5
Sweden	SEMKO	1
Switzerland	SEV	1
Taiwan	BSMI	6
Thailand	TISI	1
United Kingdom	ASTA	1
United States	UL	2

1. The flexible cord must be Type HO5VV-F, three-conductor, 0.75 mm² conductor size. Power cord set fittings (appliance coupler and wall plug) must bear the certification mark of the agency responsible for evaluation in the country or region where it will be used.
2. The flexible cord must be Type SVT/SJT or equivalent, No. 18 AWG, three-conductor. The wall plug must be a two-pole grounding type with a NEMA 5-15P (15 A, 125 V AC) or NEMA 6-15P (15 A, 250 V AC) configuration. CSA or C-UL mark. UL file number must be on each element.
3. The appliance coupler, flexible cord, and wall plug must bear a T mark and registration number in accordance with the Japanese Dentori Law. The flexible cord must be Type VCTF, three-conductor, 0.75 mm² or 1.25 mm² conductor size. The wall plug must be a two-pole grounding type with a Japanese Industrial Standard C8303 (7 A, 125 V AC) configuration.
4. The flexible cord must be Type RVV, three-conductor, 0.75 mm² conductor size. Power cord set fittings (appliance coupler and wall plug) must bear the CCC certification mark.
5. The flexible cord must be Type H05VV-F three-conductor, 0.75 mm² conductor size. KTL logo and individual approval number must be on each element. Approval number and logo must be printed on a flag label.
6. The flexible cord must be Type HVCTF three-conductor, 1.25 mm² conductor size. Power cord set fittings (appliance coupler, cable, and wall plug) must bear the BSMI certification mark.
7. For 127 V AC, the flexible cord must be Type SVT or SJT 3-conductor, 18 AWG, with plug NEMA 5-15P (15 A, 125 V AC), with UL and CSA or C-UL marks. For 240 V AC, the flexible cord must be Type H05VV-F three-conductor, 0.75 mm² or 1.00 mm² conductor size, with plug BS 1363/A with BSI or ASTA marks.

11 Recycling

When a nonrechargeable or rechargeable battery has reached the end of its useful life, do not dispose of the battery in general household waste. Follow the local laws and regulations in your area for battery disposal.

HP encourages customers to recycle used electronic hardware, HP original print cartridges, and rechargeable batteries. For more information about recycling programs, see the HP website at http://www.hp.com/recycle.

Index

A

AC adapter 5
AC adapter, spare part numbers 11
audio-in (microphone) jack, identifying 4
audio-out (headphone) jack, identifying 4

B

backing up 38
Bluetooth label 6
bottom cover
  illustrated 10
  removal 22
  spare part number 10, 22
bottom shield
  illustrated 10
  removal 24
  spare part number 10, 24
buttons
  power 5
buttons, recovery 3

C

caring for your computer 17
cautions
  electrostatic discharge 13, 14
Chromebook Recovery Utility, installing 39
Chromebox major components 9
cleaning your computer 17
  caring for wood veneer 19
  disinfecting 18
  HP Easy Clean 17
  removing dirt and debris 17
components
  bottom 6
  front side 3
  rear side 5
  right side 3
computer specifications 52

D

display
  specifications 52

E

electrostatic discharge (ESD) 13, 14
  preventing damage 13-15

F

fan
  illustrated 10
  removal 33
  spare part number 10, 33
feet
  illustrated 10
  removal 23
  spare part number 10
foot
  spare part number 23

G

graphics, product description 1
grounding methods 13-15
guidelines
  packaging 13, 19
  transporting 13, 19
  workstation 13

H

hard drive
  product description 1
  specifications 52
headphone (audio-out) jack 4
heat sink
  illustrated 10
  removal 33
  spare part number 10, 33
HP Sure Start 42, 46, 47, 51

I

I/O side frame
  illustrated 10
  removal 23
  spare part number 10, 23
illustrated parts catalog 9

J

jack, RJ-45 network, identifying 5
jacks
  audio-in (microphone) 4
  audio-out (headphone) 4

K

keyboard
  product description 2

L

labels
  Bluetooth 6
  regulatory 6
  serial number 6
  service 6
  wireless certification 6
  WLAN 6

M

media card reader, product description 1
memory
  nonvolatile 42, 47
  volatile 42, 47
memory module
  illustrated 10
  product description 1
  removal 29
  spare part numbers 10, 29
memory module shield
  removal 29
  spare part number 29
memory shield
  illustrated 10
  spare part number 10
micro memory card reader, identifying 4
microphone (audio-in) jack, identifying 4
model name 1

N

nonvolatile memory 42, 47

O

operating system, product description 2

P

packaging guidelines 13, 19
pointing device, product description 2
ports 4
  product description 2
  USB SuperSpeed 5
  USB Type-C with HP Sleep and Charge 6
power button board
  illustrated 10
  removal 36
  spare part number 10, 36
power button board cable
  illustrated 10
  removal 37
  spare part number 10, 37
power button, identifying 5
power connector cable
  illustrated 10
  removal 25
  spare part number 10, 25
power connector cable bracket
  illustrated 10
  removal 26
  spare part number 10, 26
power connector cable bracket with gasket
  removal 26
power connector cable gasket
  illustrated 10
  spare part number 10
power cord
  requirements for all countries 54
  requirements for specific countries and regions 54
  set requirements 54
  spare part numbers 11, 12
power requirements, product description 2
primary storage
  product description 1
processor
  product description 1
product description
  graphics 1
  hard drive 1
  keyboard 2
  media card reader 1
  memory module 1
  operating system 2
  pointing device 2
  ports 2
  power requirements 2
  primary storage 1
  processors 1
  product name 1
  serviceability 2
  solid-state drive 1
  wireless 1
product name 1
product name and number, computer 6

R

recovery button, identifying 3
recovery media
  creating 40
  erase 41
recovery, performing 38
regulatory information
  regulatory label 6
  wireless certification labels 6
removal and replacement procedures 22
removing personal data from volatile system memory 42, 47
resetting 38
rubber feet
  illustrated 10
  removal 23
  spare part number 10
rubber foot
  spare part number 23

S

security cable slot, identifying 3
serial number, computer 6
service labels, locating 6
serviceability, product description 2
slots
  security cable 3
solid-state drive
  illustrated 10, 28
  product description 1
  removal 28
  spare part number 10, 28
  specifications 52
specifications
  computer 52
  display 52
  hard drive 52
  solid-state drive 52
static electricity 13, 14
support information 20
system board
  illustrated 10
  removal 30
  spare part numbers 10, 30
system memory, removing personal data from volatile 42, 47
system recovery
  Chrome operating system 40
  Chromebook Recovery Utility 39
  internet connection 39
  recovery media 40

T

top cover
  illustrated 10
  spare part number 10
top shield
  illustrated 10
  removal 35
  spare part number 10, 35
transporting guidelines 13, 19
traveling with the computer 6

U

USB port 4
USB port, identifying 4, 5
USB Type-C port with HP Sleep and Charge, identifying 6

V

vent, identifying 6

W

wireless certification label 6
wireless, product description 1
WLAN device 6
WLAN label 6
WLAN module
  illustrated 10, 26
  removal 26
  spare part number 10, 26
workstation guidelines 13