E19868
First Edition / April 2022

G SERIES

GAMING NOTEBOOK PC

SERVICE MANUAL

MORE INFO:

COPYRIGHT INFORMATION

No part of this manual, including the products and software described in it, may be reproduced, transmitted, transcribed, stored in a retrieval system, or translated into any language in any form or by any means, except documentation kept by the purchaser for backup purposes, without the express written permission of ASUSTeK COMPUTER INC. ("ASUS").

ASUS PROVIDES THIS MANUAL "AS IS" WITHOUT WARRANTY OF ANY KIND, EITHER EXPRESS OR IMPLIED, INCLUDING BUT NOT LIMITED TO THE IMPLIED WARRANTIES OR CONDITIONS OF MERCHANTABILITY OR FITNESS FOR A PARTICULAR PURPOSE. IN NO EVENT SHALL ASUS, ITS DIRECTORS, OFFICERS, EMPLOYEES OR AGENTS BE LIABLE FOR ANY INDIRECT, SPECIAL, INCIDENTAL, OR CONSEQUENTIAL DAMAGES (INCLUDING DAMAGES FOR LOSS OF PROFITS, LOSS OF BUSINESS, LOSS OF USE OR DATA, INTERRUPTION OF BUSINESS AND THE LIKE), EVEN IF ASUS HAS BEEN ADVISED OF THE POSSIBILITY OF SUCH DAMAGES ARISING FROM ANY DEFECT OR ERROR IN THIS MANUAL OR PRODUCT.

Products and corporate names appearing in this manual may or may not be registered trademarks or copyrights of their respective companies, and are used only for identification or explanation and to the owners' benefit, without intent to infringe.

SPECIFICATIONS AND INFORMATION CONTAINED IN THIS MANUAL ARE FURNISHED FOR INFORMATIONAL USE ONLY, AND ARE SUBJECT TO CHANGE AT ANY TIME WITHOUT NOTICE, AND SHOULD NOT BE CONSTRUED AS A COMMITMENT BY ASUS. ASUS ASSUMES NO RESPONSIBILITY OR LIABILITY FOR ANY ERRORS OR INACCURACIES THAT MAY APPEAR IN THIS MANUAL, INCLUDING THE PRODUCTS AND SOFTWARE DESCRIBED IN IT.

Copyright © 2022 ASUSTeK COMPUTER INC. All Rights Reserved.

LIMITATION OF LIABILITY

Circumstances may arise where because of a default on ASUS' part or other liability, you are entitled to recover damages from ASUS. In each such instance, regardless of the basis on which you are entitled to claim damages from ASUS, ASUS is liable for no more than damages for bodily injury (including death) and damage to real property and tangible personal property; or any other actual and direct damages resulted from omission or failure of performing legal duties under this Warranty Statement, up to the listed contract price of each product.

ASUS will only be responsible for or indemnify you for loss, damages or claims based in contract, tort or infringement under this Warranty Statement.

This limit also applies to ASUS' suppliers and its reseller. It is the maximum for which ASUS, its suppliers, and your reseller are collectively responsible.

UNDER NO CIRCUMSTANCES IS ASUS LIABLE FOR ANY OF THE FOLLOWING: (1) THIRD-PARTY CLAIMS AGAINST YOU FOR DAMAGES; (2) LOSS OF, OR DAMAGE TO, YOUR RECORDS OR DATA; OR (3) SPECIAL, INCIDENTAL, OR INDIRECT DAMAGES OR FOR ANY ECONOMIC CONSEQUENTIAL DAMAGES (INCLUDING LOST PROFITS OR SAVINGS), EVEN IF ASUS, ITS SUPPLIERS OR YOUR RESELLER IS INFORMED OF THEIR POSSIBILITY.

SERVICE AND SUPPORT

Visit our multi-language website at https://www.asus.com/support/.

MyASUS offers a variety of support features including troubleshooting, products performance optimization, ASUS software integration, and helps you to organize personal desktop and increase storage space. For more details, please visit https://www.asus.com/support/FAQ/1038301/.

Table of Contents

Disclaimer....4
Safety precautions....4
Major components....6
Installation tools....7
Removing the compartment cover....8
Cover screw map....10
Disconnecting the battery....11
Installing a RAM module....12
Installing an M.2 card....14
Wiring and connection diagrams....16

Disclaimer

ASUS is not responsible for direct, indirect, intentional or unintentional damages resulting from improper installation and operation.

Safety precautions

- Keep liquids or moisture away from your Notebook PC before installing or removing any components.
- Ensure to place your Notebook PC on a stable surface before installing or removing any components.
- Detach the clip or flap before removing the signal cables to prevent damage.
- Disconnect the power plug by pulling the plug evenly to avoid damage. Ensure to connect the signal cables in the correct orientation.
- Disconnect all power cables and remove the battery pack (if applicable) before cleaning your Notebook PC with liquid detergent to avoid risk of electric shock.
- Disconnect all power cables and remove the battery pack (if applicable) before installing or removing any components. Ensure to read and follow the instructions in the manual.

- Before handling components, use a grounded wrist strap or touch a safely grounded object to avoid damaging them due to static electricity.
- Keep liquids or moisture away from your Notebook PC to avoid short circuits.
- Hold components by the edges to avoid touching the ICs.
- Ensure to properly install all the components before connecting the AC power.
- Do not use power adapters or batteries from other devices to reduce the risk of injury to persons due to fire or explosion. Use only certified power adapters or batteries supplied by the manufacturer or authorized retailers.
- Ensure to install the correct screw models on your Notebook PC to prevent damage.

Major components

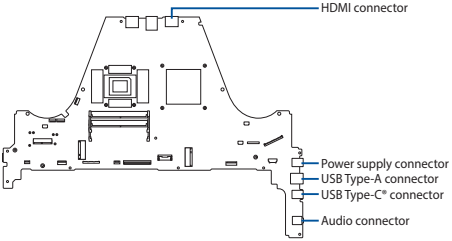

Motherboard with ports and connectors

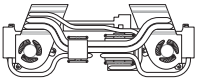

Thermal module

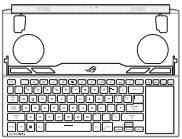

Keyboard

RAM module

SSD module

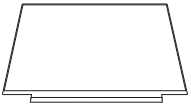

LCD panel module

Power adapter

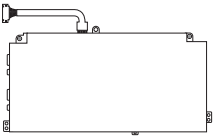

Battery and power connector

NOTE: The illustration is for reference only.

Installation tools

Screwdriver

Plastic blade

Tweezers

Removing the compartment cover

A. Remove the rubber cover(s) to expose the screw(s) underneath.

B. Remove the screw(s) from the Notebook PC's compartment cover.

C. Loosen the Pop-open Screw without removing the screw from the cover.

D. Pull out the compartment cover and remove it completely from your Notebook PC.

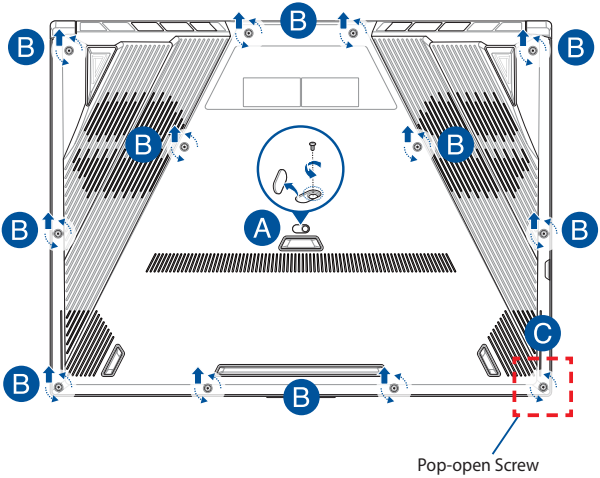

To reattach the compartment cover:

A. Align and reattach the cover of the compartment.

B. Secure the cover using the screw(s) you removed earlier.

C. Tighten the Pop-open Screw.

D. Put the rubber cover(s) in place.

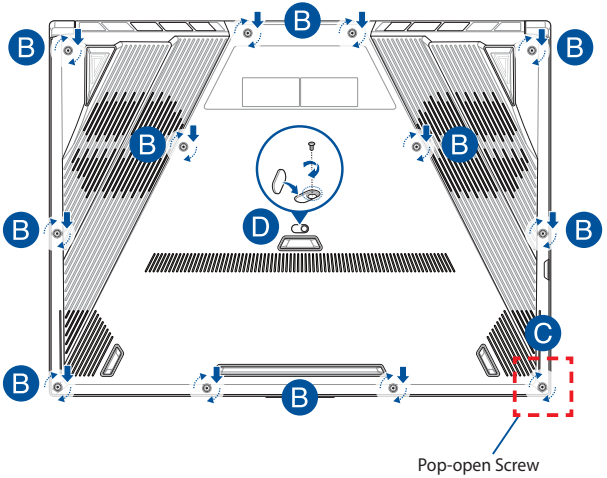

Cover screw map

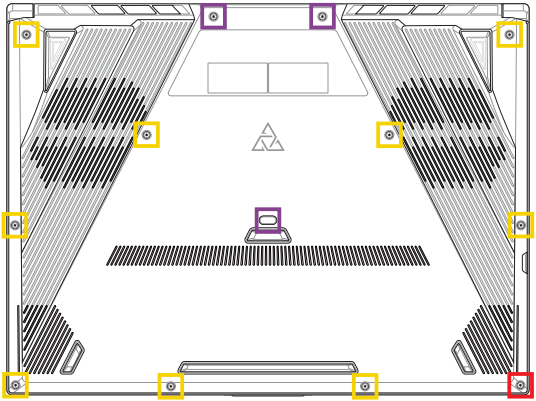

- M2 X 13L (3PCS)
- M2 X 7L (9PCS)
- M2.5 X 7L (1PC Pop-open Screw)

Disconnecting the battery

A. Remove the compartment cover.

NOTE: For more details, refer to the *Removing the compartment cover* section in this manual.

B. Disconnect the cable from the battery connector.

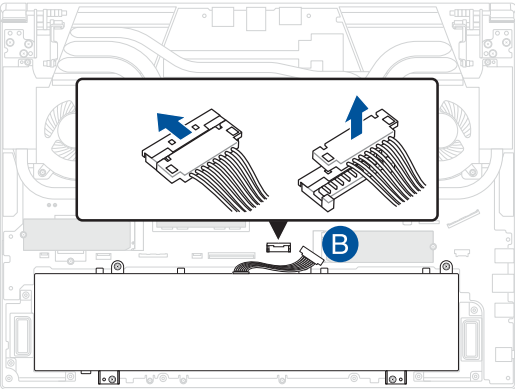

To connect the battery, align and connect the cable to the battery connector before you reattach the compartment cover.

Installing a RAM module

Upgrade the memory capacity of your Notebook PC by installing a RAM (Random Access Memory) module in the memory module compartment. The following steps show you how to install a RAM module into your Notebook PC:

WARNING! Disconnect all the connected peripherals, any telephone or telecommunication lines and power connector (such as external power supply, battery pack, etc.) before removing the compartment cover.

IMPORTANT! Visit an authorized service center or retailer for information on RAM module upgrades for your Notebook PC. Purchase RAM modules from authorized retailers of this Notebook PC to ensure maximum compatibility and reliability.

NOTE:

- The appearance of your Notebook PC's bottom view and RAM module may vary per model but the RAM module installation remains the same.
- It is recommended that you install the RAM module under professional supervision. You may also visit an authorized service center for further assistance.

A. Remove the compartment cover and disconnect the battery.

NOTE: For more details, refer to the *Removing the compartment cover* and *Disconnecting the battery* sections in this manual.

B. Align and insert the RAM module into the RAM module slot.

C. Push down the RAM module until it clicks in place.

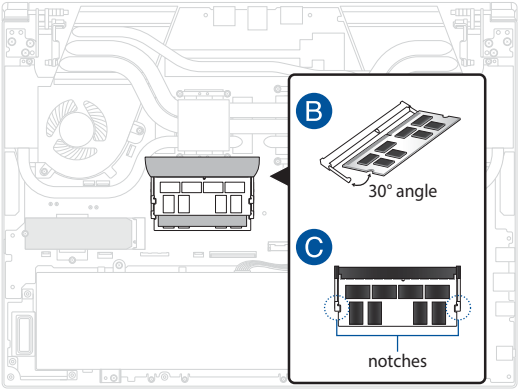

Installing an M.2 card

Refer to the following steps when installing a compatible M.2 card in your Notebook PC:

IMPORTANT! Purchase your M.2 card from authorized retailers of this Notebook PC to ensure maximum compatibility and reliability.

WARNING! Disconnect all the connected peripherals, any telephone or telecommunication lines and power connector (such as external power supply, battery pack, etc.) before removing the compartment cover.

NOTE:

- The appearance of your Notebook PC's bottom view and M.2 card may vary per model but the module installation remains the same.
- It is recommended that you install the M.2 card under professional supervision. You may also visit an authorized service center for further assistance.
- The M.2 2280 slot does not support M.2 SATA SSD.

A. Remove the compartment cover and disconnect the battery.

NOTE: For more details, refer to the *Removing the compartment cover* and *Disconnecting the battery* sections in this manual.

B. Align and insert the M.2 card into the module slot.

C. Secure the M.2 card in place using the bundled screw(s).

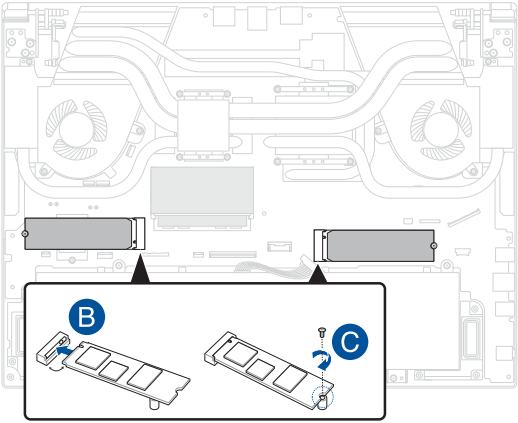

Wiring and connection diagrams

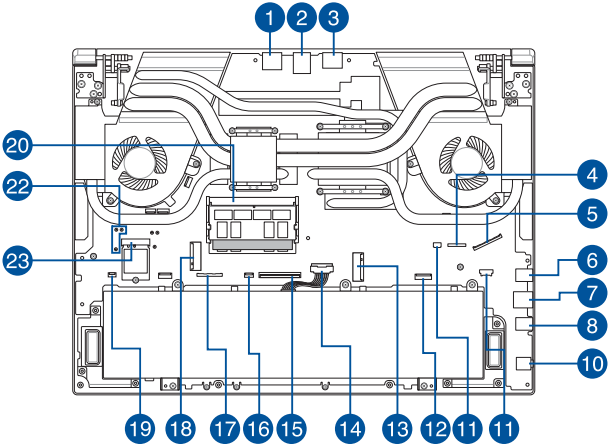

Top View

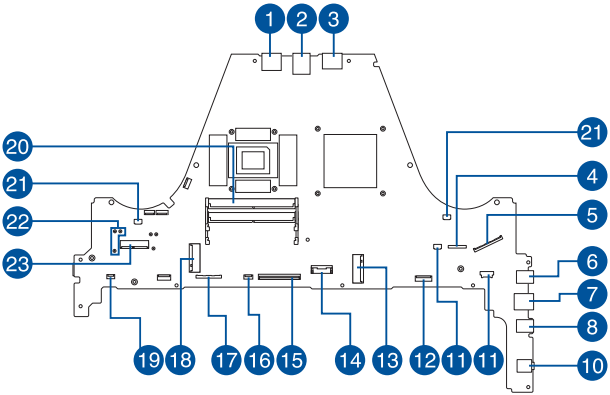

Bottom View

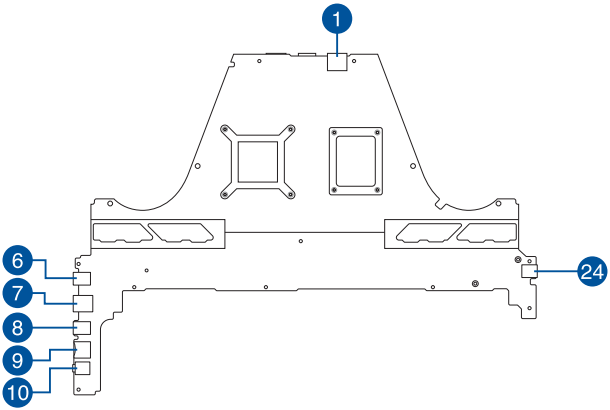

1. LAN connector
2. USB Type-A connector
3. HDMI connector
4. IR camera connector
5. Display connector
6. Power supply connector
7. USB Type-A connector
8. USB Type-C® connector
9. MicroSD connector
10. Audio connector
11. Speaker connector
12. LED backlight connector
13. Second SSD connector
14 Battery connector
15. Keyboard connector
16. Touch panel connector
17. Second display connector
18. Main SSD connector
19. Touchpad connector
20. DDR5 DIMM socket
21. Fan connector
22. Antenna connector
23. Wi-Fi module connector
24. USB Type-C® connector