# Maintenance and Service Guide

**SUMMARY**

This guide provides information about spare parts, removal and replacement of parts, security, backing up, and more.

© Copyright 2022 HP Development Company, L.P.

AMD and Radeon are trademarks of Advanced Micro Devices, Inc. Bluetooth is a trademark owned by its proprietor and used by HP Inc. under license. Intel, Core, Thunderbolt, vPro, and Xeon are trademarks of Intel Corporation or its subsidiaries in the U.S. and/or other countries. Microsoft and Windows are either registered trademarks or trademarks of Microsoft Corporation in the United States and/or other countries. NVIDIA and Quadro are trademarks and/or registered trademarks of NVIDIA Corporation in the U.S. and other countries. USB Type-C and USB-C are registered trademarks of USB Implementers Forum. DisplayPort and the DisplayPort logo are trademarks owned by the Video Electronics Standards Association (VESA) in the United States and other countries.

The information contained herein is subject to change without notice. The only warranties for HP products and services are set forth in the express warranty statements accompanying such products and services. Nothing herein should be construed as constituting an additional warranty. HP shall not be liable for technical or editorial errors or omissions contained herein.

First Edition: February 2022

Document Part Number: N02459-001

**Product notice**

This guide describes features that are common to most models. Some features may not be available on your computer.

Not all features are available in all editions or versions of Windows. Systems may require upgraded and/or separately purchased hardware, drivers, software or BIOS update to take full advantage of Windows functionality. Windows is automatically updated, which is always enabled. High-speed internet and Microsoft account required. ISP fees may apply and additional requirements may apply over time for updates. See http://www.windows.com. **If your product ships with Windows in S Mode:** Windows in S Mode works exclusively with apps from the Microsoft Store within Windows. Certain default settings, features, and apps cannot be changed. Some accessories and apps that are compatible with Windows may not work (including some antivirus, PDF writers, driver utilities, and accessibility apps), and performance may vary, even if you switch out of S Mode. If you switch to Windows, you cannot switch back to S Mode. Learn more at Windows.com/SmodeFAQ.

To access the latest user guides, go to http://www.hp.com/support, and follow the instructions to find your product. Then select **Manuals**.

**Software terms**

By installing, copying, downloading, or otherwise using any software product preinstalled on this computer, you agree to be bound by the terms of the HP End User License Agreement (EULA). If you do not accept these license terms, your sole remedy is to return the entire unused product (hardware and software) within 14 days for a full refund subject to the refund policy of your seller.

For any further information or to request a full refund of the price of the computer, please contact your seller.

Not all features are available in all editions of Windows. This computer may require upgraded and/or separately purchased hardware, drivers and/or software to take full advantage of Windows functionality. Go to http://www.microsoft.com for details.

## Safety warning notice

Reduce the possibility of heat-related injuries or of overheating the computer by following the practices described.

⚠ **WARNING!** To reduce the possibility of heat-related injuries or of overheating the computer, do not place the computer directly on your lap or obstruct the computer air vents. Use the computer only on a hard, flat surface. Do not allow another hard surface, such as an adjoining optional printer, or a soft surface, such as pillows or rugs or clothing, to block airflow. Also, do not allow the AC adapter to come into contact with the skin or a soft surface, such as pillows or rugs or clothing, during operation. The computer and the AC adapter comply with the user-accessible surface temperature limits defined by applicable safety standards.

# Table of contents


1 Computer features ..... 1
Desktop front components ..... 1
Desktop rear components ..... 2
Connecting external Wi-Fi antennas ..... 3
Product specifications ..... 4
2 Illustrated parts catalog ..... 5
Computer major components ..... 5
Mass storage devices ..... 8
Miscellaneous parts ..... 9
3 Routine care, SATA drive guidelines, and disassembly preparation ..... 11
Electrostatic discharge information ..... 11
Generating static electricity ..... 11
Preventing electrostatic damage to equipment ..... 12
Personal grounding methods and equipment ..... 12
Grounding the work area ..... 13
Recommended materials and equipment ..... 13
Operating guidelines ..... 14
Routine care ..... 14
General cleaning safety precautions ..... 14
Removing dirt and debris from your computer ..... 15
Cleaning your computer with a disinfectant ..... 15
Cleaning the computer case ..... 16
Cleaning the keyboard ..... 16
Cleaning the monitor ..... 17
Cleaning the mouse ..... 17
Service considerations ..... 17
Tools and software requirements ..... 17
Screws ..... 18
Cables and connectors ..... 18
Hard drives ..... 18
Lithium coin cell battery ..... 18
SATA hard drives ..... 19
Cable management ..... 19
4 Removal and replacement procedures ..... 21
Preparation for disassembly ..... 21
Access panel ..... 21
Access panel release latch ..... 22

Optical drive ..... 22
Riser assembly (select products only) ..... 24
Rear fan ..... 26
Front bezel ..... 27
Removing bezel blanks ..... 28
Optional front bezel dust filter ..... 28
Drive cage ..... 29
Memory modules (DIMMs) ..... 30
WLAN module ..... 33
Battery ..... 35
Speaker ..... 36
Drives ..... 37
Removing and installing drives ..... 37
Removing the left-side 3.5 inch hard drive ..... 38
Removing the right-side 3.5 inch hard drive ..... 39
Solid-state drive ..... 40
Expansion card ..... 41
Power supply ..... 44
Expansion card fan (select products only) ..... 45
Hood lock ..... 46
Hood sensor ..... 46
Card reader ..... 47
Heat sink ..... 48
Processor ..... 49
Option board ..... 50
System board ..... 51
System board connections ..... 53
Wireless antennas and cables, internal ..... 54
Wireless antennas, external ..... 56
5 Troubleshooting without diagnostics ..... 58
Before you call for technical support ..... 58
Helpful hints ..... 59
Solving general problems ..... 59
Cannot access the Computer Setup (F10) Utility when booting the computer ..... 60
Computer appears locked up and will not turn off when the power button is pressed ..... 60
Computer will not respond to keyboard or mouse ..... 60
Computer date and time display is incorrect ..... 60
There is no sound or sound volume is too low ..... 60
Cannot remove computer cover or access panel ..... 61
Poor performance ..... 61

Computer turned off automatically and the power light blinks red four times and then white two times ..... 62
System does not turn on and the lights on the front of the computer are not blinking ..... 62
Solving power problems ..... 63
Power supply shuts down intermittently ..... 63
Computer turned off automatically, power light blinks red two times followed by a two-second pause, and the computer beeps two times (Beeps stop after fifth iteration but lights continue blinking) ..... 63
Power light blinks red four times followed by a two-second pause and the computer beeps four times (Beeps stop after fifth iteration but lights continue blinking) ..... 64
Solving hard drive problems ..... 64
Hard drive error occurs ..... 64
Disk drive transaction problem ..... 64
Drive not found (identified) ..... 65
Nonsystem disk/NTLDR missing message ..... 65
Computer will not boot from hard drive ..... 65
Computer seems to be locked up ..... 66
Solving audio problems ..... 66
Sound cuts in and out ..... 66
Sound does not come out of the speaker or headphones ..... 66
Computer appears to be locked up while recording audio ..... 67
Line-in jack is not functioning properly ..... 67
Solving printer problems ..... 67
Printer will not print ..... 67
Printer will not turn on ..... 68
Printer prints garbled information ..... 68
Printer will not print ..... 68
Solving keyboard and mouse problems ..... 69
Keyboard commands and typing are not recognized by the computer ..... 69
Mouse does not respond to movement or is too slow ..... 69
Solving hardware installation problems ..... 69
A new device is not recognized as part of the system ..... 70
Computer will not start ..... 70
Power light blinks red three times and then white two times ..... 70
Solving network problems ..... 71
Network driver does not detect network controller ..... 71
Network status link light never blinks ..... 71
Diagnostics reports a failure ..... 72
Diagnostics passes, but the computer does not communicate with the network ..... 72
Network controller stopped working when an expansion board was added to the computer ..... 72
Network controller stops working without apparent cause ..... 72
Cannot connect to network server when attempting remote system installation ..... 73
System setup utility reports unprogrammed EEPROM ..... 73
Solving memory problems ..... 73
System will not boot or does not function properly after installing additional memory modules ..... 73
Out of memory error ..... 74
Memory count during POST is wrong ..... 74
Insufficient memory error during operation. ..... 74

Power light blinks red five times followed by a two-second pause and the computer beeps five times (Beeps stop after fifth iteration but lights continue blinking) ..... 74
Solving USB flash drive problems ..... 74
USB flash drive is not seen as a drive letter in Windows ..... 74
USB flash drive not found (identified) ..... 75
System will not boot from USB flash drive ..... 75
The computer boots to DOS after making a bootable flash drive ..... 75
Solving internet access problems ..... 75
Unable to connect to the internet ..... 75
Cannot automatically launch internet programs ..... 76
Solving software problems ..... 76
Computer will not start up and the HP logo does not appear ..... 76
“Illegal Operation has Occurred” error message is displayed ..... 76
6 Computer Setup (F10) Utility ..... 78
Using Computer Setup (F10) Utilities ..... 78
Computer Setup Main ..... 79
Computer Setup Security ..... 83
Computer Setup Advanced ..... 87
7 POST error messages ..... 96
POST numeric codes and text messages ..... 96
Interpreting system validation diagnostic front panel LEDs and audible codes ..... 102
8 Password security and resetting CMOS ..... 105
Changing a setup or power-on password ..... 105
Deleting a setup or power-on password ..... 105
9 Using HP PC Hardware Diagnostics ..... 107
Using HP PC Hardware Diagnostics Windows (select products only) ..... 107
Using an HP PC Hardware Diagnostics Windows hardware failure ID code ..... 107
Accessing HP PC Hardware Diagnostics Windows ..... 107
Accessing HP PC Hardware Diagnostics Windows from HP Help and Support (select products only) ..... 107
Accessing HP PC Hardware Diagnostics Windows from HP Support Assistant ..... 108
Accessing HP PC Hardware Diagnostics Windows from the Start menu (select products only) ..... 108
Downloading HP PC Hardware Diagnostics Windows ..... 108
Downloading the latest HP PC Hardware Diagnostics Windows version from HP ..... 108
Downloading the HP PC Hardware Diagnostics Windows from the Microsoft Store ..... 108
Downloading HP Hardware Diagnostics Windows by product name or number (select products only) ..... 109
Installing HP PC Hardware Diagnostics Windows ..... 109
Using HP PC Hardware Diagnostics UEFI ..... 109
Using an HP PC Hardware Diagnostics UEFI hardware failure ID code ..... 109
Starting HP PC Hardware Diagnostics UEFI ..... 110
Downloading HP PC Hardware Diagnostics UEFI to a USB flash drive ..... 110
Downloading the latest HP PC Hardware Diagnostics UEFI version ..... 110
Downloading HP PC Hardware Diagnostics UEFI by product name or number (select products only) ..... 111

Using Remote HP PC Hardware Diagnostics UEFI settings (select products only) ..... 111
Downloading Remote HP PC Hardware Diagnostics UEFI ..... 111
Downloading the latest Remote HP PC Hardware Diagnostics UEFI version ..... 111
Downloading Remote HP PC Hardware Diagnostics UEFI by product name or number ..... 111
Customizing Remote HP PC Hardware Diagnostics UEFI settings ..... 111

10 Backing up, restoring, and recovering ..... 113

Backing up information and creating recovery media ..... 113
Using Windows tools for backing up ..... 113
Using the HP Cloud Recovery Download Tool to create recovery media (select products only) ..... 113

Restoring and recovering your system ..... 113
Creating a system restore ..... 114
Restoring and recovery methods ..... 114
Recovering using HP Recovery media ..... 114
Changing the computer boot order ..... 114
Using HP Sure Recover (select products only) ..... 115

11 Statement of memory volatility ..... 116

Current BIOS steps ..... 116

Nonvolatile memory usage ..... 118

Questions and answers ..... 120

Using HP Sure Start (select products only) ..... 121

12 Power cord set requirements ..... 122

General requirements ..... 122

Japanese power cord requirements ..... 122

Country-specific requirements ..... 122

13 Specifications ..... 124

Index ..... 125

# 1 Computer features

This chapter provides you with an overview of your computer's features.

## Desktop front components

To identify the front panel components, use this illustration and table.

**NOTE:** Your computer model might look slightly different from the illustration in this section.

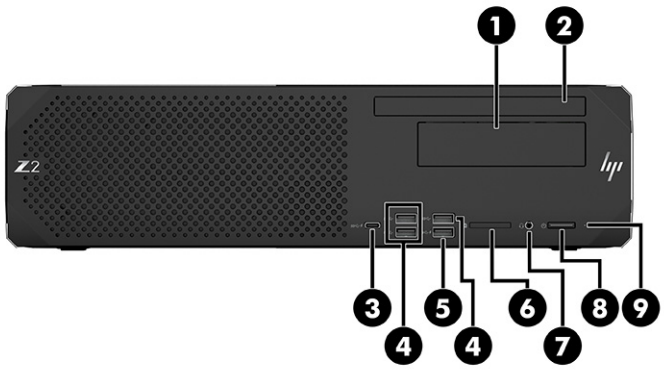


**Table 1-1 Front components and their descriptions**

| Item | Icon | Component | Item | Icon | Component |
|---|---|---|---|---|---|
| 1 | | 3.5 inch drive bay | 6 | | SD card reader (select products only) |
| 2 | | Optical drive bay | 7 | | Audio-out (headphone)/ Audio-in (microphone) combo jack |
| 3 | | USB Type-C® SuperSpeed Plus 20 Gbps port with HP Sleep and Charge | 8 | | Power button |
| 4 | | USB SuperSpeed 10 Gbps ports (3) | 9 | | Drive light |
| 5 | | USB SuperSpeed Plus 10 Gbps port with HP Sleep and Charge | | | |

**NOTE:** The combo jack supports headphones, line output devices, microphones, line input devices, CTIA-style headsets, or OMTP-style headsets.

**NOTE:** Your model might have additional components available from HP.

**NOTE:** The light on the power button is normally white when the power is on. If the light blinks red, the computer displays a diagnostic code to indicate a problem. See the *Maintenance and Service Guide* to interpret the code.

# Desktop rear components

To identify the rear panel components, use this illustration and table.

**NOTE:** Refer to the illustration that most closely matches your computer.

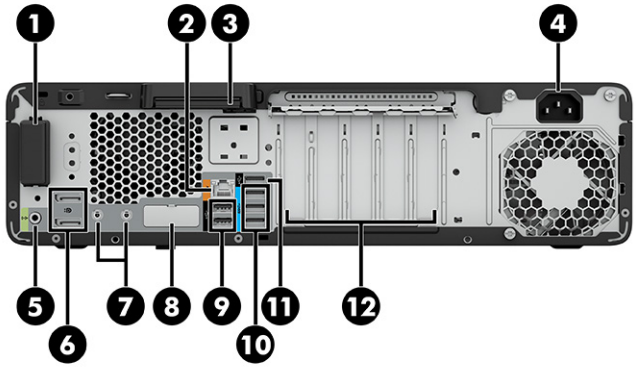


**Table 1-2 Rear components and their descriptions**

| Item | Icon | Component | Item | Icon | Component |
|---|---|---|---|---|---|
| 1 | | Antenna cover | 7 | | External Wi-Fi antenna ports (2)** |
| 2 | | RJ-45 (network) jack | 8 | | Flex I/O module (optional) |
| 3 | | Access panel latch | 9 | | USB 480 Mbps ports (2) |
| 4 | | Power connector | 10 | SS | USB SuperSpeed 5 Gbps ports (3) |
| 5 | | Audio line-out connector (green)<br>or<br>Audio-out jack for powered audio devices* | 11 | | USB 480 Mbps port |
| 6 | | DisplayPort™ (DP) connectors (2) | 12 | | Expansion slot covers (5) |

**NOTE:** *When you plug in a device, a menu opens where you can select either the Line Out or Line In option.

**NOTE:** The labels for the rear panel connectors use industry-standard icons and colors.

**NOTE:** These DP ports are supported when the system is configured with Intel® UHD integrated graphics. They are enabled by default when a discrete graphics card is installed.

**NOTE:** Simultaneous use of Intel UHD integrated graphics and discrete graphics cards to drive more than two monitors can be enabled using Computer Setup. However, HP recommends using only discrete graphics cards when attaching three or more monitors.

**NOTE:** **If you received an external antenna with your configuration, connect it to the rear panel ports. For more information see Connecting external Wi-Fi antennas on page 3.

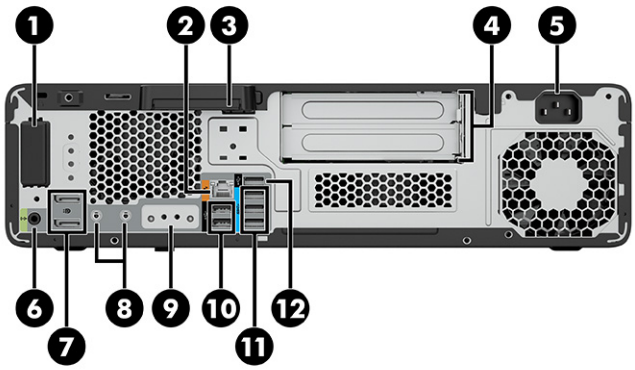


Table 1-3 Rear components and their descriptions

| Item | Icon | Component | Item | Icon | Component |
|---|---|---|---|---|---|
| 1 | | Antenna cover | 7 | | DisplayPort™ (DP) connectors (2) |
| 2 | | RJ-45 (network) jack | 8 | | External Wi-Fi antenna ports (2)** |
| 3 | | Access panel latch | 9 | | Flex I/O module (optional) |
| 4 | | Expansion slot covers (2) | 10 | | USB 480 Mbps ports (2) |
| 5 | | Power connector | 11 | | USB SuperSpeed 5 Gbps ports (3) |
| 6 | | Audio line-out connector (green)<br>or<br>Audio-out jack for powered audio devices* | 12 | | USB 480 Mbps port |

**NOTE:** *When you plug in a device, a menu opens where you can select either the Line Out or Line In option.

**NOTE:** The labels for the rear panel connectors use industry-standard icons and colors.

**NOTE:** These DP ports are supported when the system is configured with Intel® UHD integrated graphics. They are enabled by default when a discrete graphics card is installed.

**NOTE:** Simultaneous use of Intel UHD integrated graphics and discrete graphics cards to drive more than two monitors can be enabled using Computer Setup. However, HP recommends using only discrete graphics cards when attaching three or more monitors.

**NOTE:** **If you received an external antenna with your configuration, connect it to the rear panel ports. For more information see Connecting external Wi-Fi antennas on page 3.

# Connecting external Wi-Fi antennas

Read this section to learn how to connect external Wi-Fi antennas to your computer.

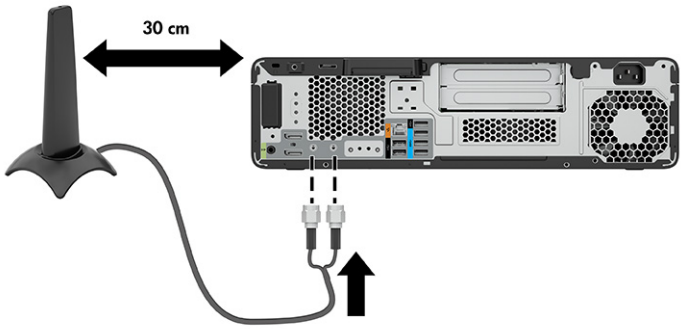


For best performance, place the antenna on either side of the computer where it has the clearest line-of-sight to the access point or router. The recommended distance is more than 30 cm from the computer. Avoid placing the antenna in front, behind, or on top of the computer because of the risk of noise interference.

# Product specifications

Read this section to learn where to find the technical specifications about your computer.

To find the QuickSpecs for your product, go to http://www.hp.com/go/quickspecs, and then select the link. Select **Search all QuickSpecs**, type your model name in the search box, and then select **Go**.

– or –

Go to http://www.hp.com/support, and follow the instructions to find your product. Select **Product Information**, and then select your computer specifications.

# 2 Illustrated parts catalog

Use this information to determine the spare parts that are available for the computer.

**NOTE:** HP continually improves and changes product parts. For complete and current information about supported parts for your computer, go to http://partsurfer.hp.com, select your country or region, and then follow the on-screen instructions.

## Computer major components

To identify the computer major components, use this illustration and table.

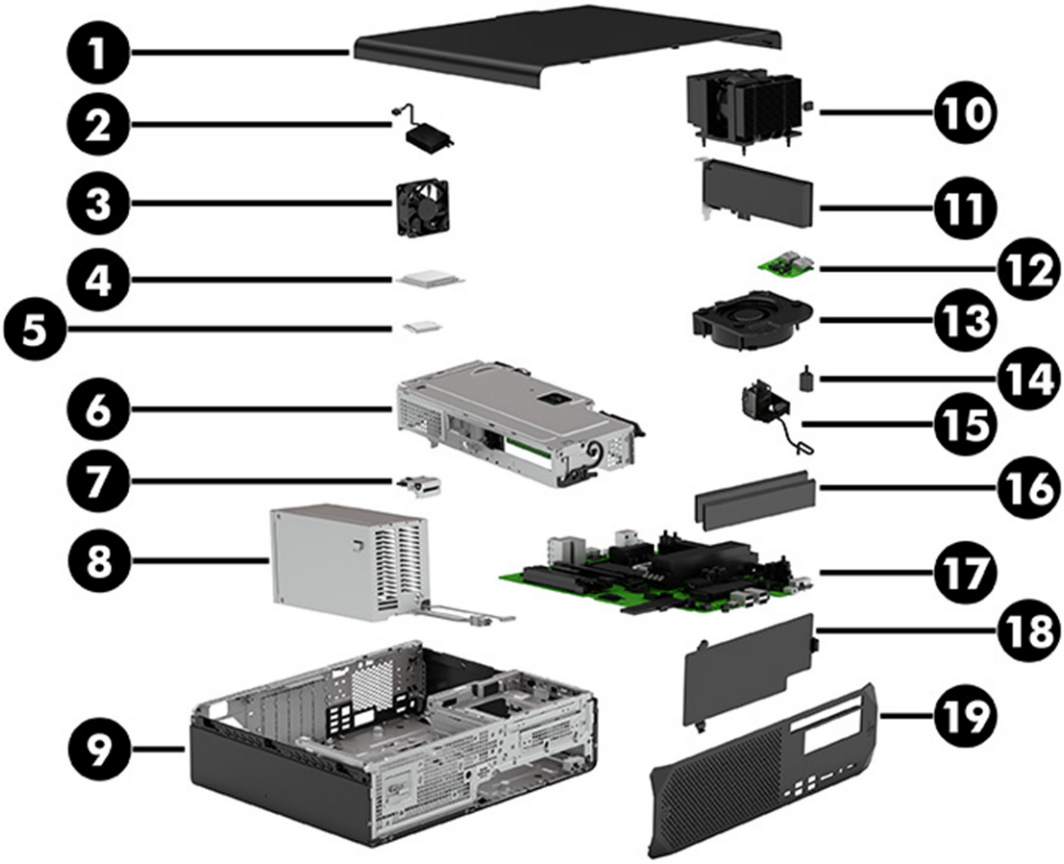


**Table 2-1 Computer major components and their descriptions**

| Item | Description |
|---|---|
| (1) | **Access panel** |
| | **Access cover handle** (not illustrated) |
| (2) | **Speaker** |
| (3) | **Rear fan** |

Table 2-1 **Computer major components and their descriptions (continued)**

| Item | Description |
|---|---|
| **(4)** | **Processor** |
| | Intel® Core® i9-12900 (2.4 GHz, 16 core, 65 W) |
| | Intel Core i9-12900K (3.5 GHz, 16 core, 125 W) |
| | Intel Core i7-12700 (2.1 GHz, 12 core, 65 W) |
| | Intel Core i7-12700K (3.6 GHz, 12 core, 125 W) |
| | Intel Core i5-12600 (3.3 GHz, 6 core, 65 W) |
| | Intel Core i5-12600K (3.7 GHz, 10 core, 125 W) |
| | Intel Core i5-12500 (3.0 GHz, 6 core, 65 W) |
| | Intel Core i5-12400 (2.5 GHz, 6 core, 65 W) |
| | Intel Core i3-12300 (3.5 GHz, 4 core, 60 W) |
| | Intel Core i3-12100 (3.3 GHz, 4 core, 60 W) |
| **(5)** | **WLAN module** (Intel® AX211 Wi-Fi® 6e Bluetooth® 5.2 WLAN) |
| **(6)** | **Riser assembly** (select products only) |
| **(7)** | **Card reader** |
| **(8)** | **Power supply** |
| | 550 W |
| | 450 W |
| | 260 W |
| **(9)** | **System chassis**<br>**NOTE:** A low-profile chassis and a riser card chassis is available. You cannot upgrade of change the chassis. |
| **(10)** | **Heat sink** |
| | 125 W |
| | 65 W, premium |
| | 65 W |
| **(11)** | **Expansion card** (appearance can vary) |
| | NVIDIA® T400 |
| | NVIDIA T600 |
| | NVIDIA T1000 |
| | NVIDIA RTX™ A2000 |
| | NVIDIA RTX A4000 |
| | AMD® Radeon™ RX6700XT |
| | AMD Radeon Pro W6600 |
| | NIC, Intel I350, 1 GbE |
| | NIC, Intel I225 |

Table 2-1 **Computer major components and their descriptions (continued)**

| Item | Description |
|---|---|
| | NIC, Intel x550, 10 GbE |
| | NVIDIA 10GbE SFP NIC |
| | NVIDIA 25GbE SFP28 NIC |
| | NVIDIA ConnectX-6 DX Dual Port 10/25GbE SFP28 NIC |
| | Serial port + PS/2 |
| | M.2 adapter |
| | Riser assembly expansion boards |
| | Dual PCIx x4 board |
| | Dual PCIe x16 board |
| **(12)** | **Option board** |
| | USB Type-C® |
| | (2) USB Type-A ports |
| | Thunderbolt™ |
| | HDMI |
| | DisplayPort |
| | USB + NIC |
| | VGA port |
| | NIC |
| **(13)** | **Expansion board fan** |
| **(14)** | **Hood sensor** |
| **(15)** | **Solenoid hood lock** |
| **(16)** | **Memory modules** (UDIMM, PC5-4800) |
| | 32 GB (ECC or non-ECC) |
| | 16 GB (ECC or non-ECC) |
| | 8 GB (non-ECC only) |
| **(17)** | **System board** (includes replacement thermal material) |
| **(18)** | **Front bezel dust filter** |
| **(19)** | **Front bezel** |
| * | **Second serial port** |
| | **RS-232 (serial port) module** |
| * | **Wireless antennas** |

* not illustrated

# Mass storage devices

To identify the available hard drives and solid-state drives, use this table.

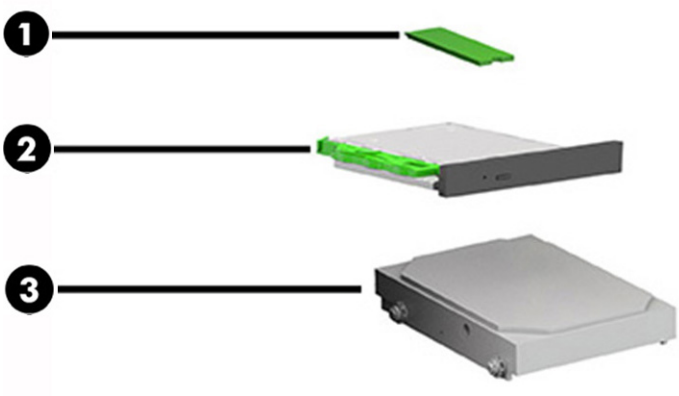


**Table 2-2 Mass storage devices and their descriptions**

| Item | Description |
|---|---|
| **(1)** | **Solid-state drive** (M.2 2280, PCIe) |
| | 4 TB, PCIe-4 × 4, TLC |
| | 4 TB, PCIe-4 × 4, TLC, self-encrypting drive (SED) |
| | 2 TB, PCIe-4 × 4, TLC, ZTurbo |
| | 2 TB, PCIe-4 × 4, TLC, self-encrypting drive (SED) |
| | 1 TB, PCIe-4 × 4, TLC |
| | 1 TB, PCIe-4 × 4, TLC, self-encrypting drive (SED) |
| | 1 TB, PCIe-4 × 4, value |
| | 512 GB, PCIe-4 × 4, TLC |
| | 512 GB, PCIe-4 × 4, TLC, self-encrypting drive (SED) |
| | 512 GB, PCIe-4 × 4, value |
| | 256 GB, PCIe-4 × 4, value |
| **(2)** | **Optical drive** |
| | DVD-ROM |
| | DVD±RW |
| **(3)** | **Hard drive** |
| | 12 TB, 7200 rpm, 3.5 in |
| | 8 TB, 7200 rpm, 3.5 in |
| | 4 TB, 7200 rpm, 3.5 in |
| | 2 TB, 7200 rpm, 3.5 in |
| | 1 TB, 7200 rpm, 3.5 in |
| | 500 GB, 7200 rpm, 3.5 in |
| | 500 GB, 7200 rpm, self-encrypting drive (SED), 7 mm |

# Miscellaneous parts

To identify the various computer parts, use this table.

**Table 2-3 Miscellaneous parts and their descriptions**

| Description |
| --- |
| **Computer stand** |
| **Bezel dust filter** |
| **Wireless card cable holder** |
| **Heat sink for use on an M.2 solid-state drive** |
| **3.5 inch drive bracket keys** |
| **Solenoid hood lock** |
| **Antenna cover** |
| **Optical drive latch** |
| **Riser assembly brackets** |
| Main riser assembly |
| Low profile bracket for A2000 graphics cards |
| Low profile bracket for P600 and P1000 graphics cards |
| Low profile bracket for P400 graphics cards |
| **Cables** |
| SATA, 27.9 cm (11.0 in), 1 straight end, 1 right angle end, RF |
| SATA, 27.9 cm (11.0 in), 2 straight ends, RF |
| SATA, 35.6 cm (14.0 in), 2 straight ends |
| SATA power cable |
| SATA power cable, RF |
| Riser board graphics card extender cable |
| Card reader board cable |
| 260 W power supply splitter cable |
| **Adapter** |
| Mini DisplayPort-to-DisplayPort |
| DisplayPort-to-HDMI 2.0 |
| **Mouse** |
| HP USB |
| HP 125 wired |
| HP 128 laser wired |
| **Keyboard** |
| HP USB |

Table 2-3 **Miscellaneous parts and their descriptions (continued)**

| Description |
| --- |
| HP 125 wired |
| **Power cord** (C13, 1.83 m [6 ft]) |

# 3 Routine care, SATA drive guidelines, and disassembly preparation

This information provides general service information for the computer. Adherence to the procedures and precautions is essential for proper service.

**IMPORTANT:** When the computer is plugged into an AC power source, AC voltage is always applied to the system board. You must disconnect the power cord from the power source before opening the computer to prevent electric shock, system board, or component damage.

## Electrostatic discharge information

A sudden discharge of static electricity from your finger or other conductor can destroy static-sensitive devices or microcircuitry. Often the spark is neither felt nor heard, but damage occurs.

An electronic device exposed to electrostatic discharge (ESD) might not appear to be affected at all and can work perfectly throughout a normal cycle. The device might function normally for a while, but it has been degraded in the internal layers, reducing its life expectancy.

Networks built into many integrated circuits provide some protection, but in many cases, the discharge contains enough power to alter device parameters or melt silicon junctions.

**IMPORTANT:** To prevent damage to the device when you are removing or installing internal components, observe these precautions:

Keep components in their electrostatic-safe containers until you are ready to install them.

Before touching an electronic component, discharge static electricity by using the guidelines described in this section.

Avoid touching pins, leads, and circuitry. Handle electronic components as little as possible.

If you remove a component, place it in an electrostatic-safe container.

### Generating static electricity

This table shows how humidity affects the electrostatic voltage levels generated by different activities. A product can be degraded by 700 V.

- Different activities generate different amounts of static electricity.
- Static electricity increases as humidity decreases.

**Table 3-1 Static electricity occurrence based on activity and humidity**

| | Relative humidity | | |
|---|---|---|---|
| **Event** | **55%** | **40%** | **10%** |

Table 3-1 **Static electricity occurrence based on activity and humidity (continued)**

| | Relative humidity | | |
|---|---|---|---|
| Walking across carpet | 7,500 V | 15,000 V | 35,000 V |
| Walking across vinyl floor | 3,000 V | 5,000 V | 12,000 V |
| Motions of bench worker | 400 V | 800 V | 6,000 V |
| Removing DIPs (dual in-line packages) from plastic tube | 400 V | 700 V | 2,000 V |
| Removing DIPs from vinyl tray | 2,000 V | 4,000 V | 11,500 V |
| Removing DIPs from polystyrene foam | 3,500 V | 5,000 V | 14,500 V |
| Removing bubble pack from PCB (printed circuit board) | 7,000 V | 20,000 V | 26,500 V |
| Packing PCBs in foam-lined box | 5,000 V | 11,000 V | 21,000 V |
| Multiple electric components can be packaged together in plastic tubes, trays, or polystyrene foam. | | | |

## Preventing electrostatic damage to equipment

Many electronic components are sensitive to ESD. Circuitry design and structure determine the degree of sensitivity. The following packaging and grounding precautions are necessary to prevent static electricity damage to electronic components.

- To avoid hand contact, transport products in static-safe containers such as tubes, bags, or boxes.
- Protect all electrostatic parts and assemblies with conductive or approved containers or packaging.
- Keep electrostatic-sensitive parts in their containers until they arrive at static-free stations.
- Place items on a grounded surface before removing them from their container.
- Always be properly grounded when touching a sensitive component or assembly.
- Avoid contact with pins, leads, or circuitry.
- Place reusable electrostatic-sensitive parts from assemblies in protective packaging or conductive foam.

## Personal grounding methods and equipment

Use this equipment to prevent static electricity damage to electronic components.

- **Wrist straps** are flexible straps with a maximum of 1 MΩ ±10% resistance in the ground cords. To provide proper ground, a strap must be worn snug against bare skin. The ground cord must be connected and fit snugly into the banana plug connector on the grounding mat or workstation.
- **Heel straps/Toe straps/Boot straps** can be used at standing workstations and are compatible with most types of shoes or boots. On conductive floors or dissipative floor mats, use them on both feet with a maximum of 1 MΩ ±10% resistance between the operator and ground.

Table 3-2 **Static shielding protection levels**

| Static shielding protection levels | |
|---|---|
| **Method** | **Voltage** |

Table 3-2 **Static shielding protection levels (continued)**

| Static shielding protection levels | |
|---|---|
| Antistatic plastic | 1,500 V |
| Carbon-loaded plastic | 7,500 V |
| Metallized laminate | 15,000 V |

## Grounding the work area

To prevent static damage at the work area, use these precautions.

- Cover the work surface with approved static-dissipative material. Provide a wrist strap connected to the work surface and properly grounded tools and equipment.
- Use static-dissipative mats, foot straps, or air ionizers to give added protection.
- Handle electrostatic sensitive components, parts, and assemblies by the case or PCB laminate. Handle them only at static-free work areas.
- Turn off power and input signals before inserting and removing connectors or test equipment.
- Use fixtures made of static-safe materials when fixtures must directly contact dissipative surfaces.
- Keep work area free of nonconductive materials such as ordinary plastic assembly aids and polystyrene foam.
- Use field service tools, such as cutters, screwdrivers, and vacuums, that are conductive.

## Recommended materials and equipment

HP recommends the these materials and equipment to prevent static electricity.

- Antistatic tape
- Antistatic smocks, aprons, or sleeve protectors
- Conductive bins and other assembly or soldering aids
- Conductive foam
- Conductive tabletop workstations with ground cord of 1 MΩ ±10% resistance
- Static-dissipative table or floor mats with hard tie to ground
- Field service kits
- Static awareness labels
- Wrist straps and footwear straps providing 1 MΩ ±10% resistance
- Material handling packages
- Conductive plastic bags
- Conductive plastic tubes
- Conductive tote boxes

- Opaque shielding bags
- Transparent metallized shielding bags
- Transparent shielding tubes

# Operating guidelines

This information details how to prevent overheating and to help prolong the life of the computer.

- Keep the computer away from excessive moisture, direct sunlight, and extremes of heat and cold.
- Operate the computer on a sturdy, level surface. Leave a 10.2 cm (4 inch) clearance on all vented sides of the computer and above the monitor to permit the required airflow.
- Never restrict the airflow into the computer by blocking any vents or air intakes. Do not place the keyboard, with the keyboard feet down, directly against the front of the desktop unit as this also restricts airflow.
- Occasionally clean the air vents on all vented sides of the computer. Lint, dust, and other foreign matter can block the vents and limit the airflow. Be sure to unplug the computer before cleaning the air vents.
- Never operate the computer with the cover or side panel removed.
- Do not stack computers on top of each other or place computers so near each other that they are subject to each other's recirculated or preheated air.
- If the computer is to be operated within a separate enclosure, intake and exhaust ventilation must be provided on the enclosure, and the same operating guidelines listed previously still apply.
- Keep liquids away from the computer and keyboard.
- Never cover the ventilation slots on the monitor with any type of material.
- Install or enable power management functions of the operating system or other software, including Sleep states.

# Routine care

Use this information to properly care for your computer.

## General cleaning safety precautions

Use this information to safely clean your computer.

⚠ **CAUTION:** To prevent electric shock or damage to components, never clean a product while it is turned on or plugged in.

- Never use solvents or flammable solutions to clean the computer.
- Never immerse any parts in water or cleaning solutions; apply any liquids to a clean cloth and then use the cloth on the component.
- Always unplug the computer when cleaning with liquids or damp cloths.
- Always unplug the computer before cleaning the keyboard, mouse, or air vents.

- Disconnect the keyboard before cleaning it.
- Wear safety glasses equipped with side shields when cleaning the keyboard.

## Removing dirt and debris from your computer

Here are the recommended steps to clean dirt and debris from your computer.

1. Wear disposable gloves made of latex (or nitrile gloves, if you are latex-sensitive) when cleaning the surfaces.
2. Turn off your device and unplug the power cord and other connected external devices. Remove any installed batteries from items such as wireless keyboards.

> **CAUTION:** To prevent electric shock or damage to components, never clean a product while it is turned on or plugged in.

3. Moisten a microfiber cloth with water. The cloth should be moist, but not dripping wet.

> **IMPORTANT:** To avoid damaging the surface, avoid abrasive cloths, towels, and paper towels.

4. Wipe the exterior of the product gently with the moistened cloth.

> **IMPORTANT:** Keep liquids away from the product. Avoid getting moisture in any openings. If liquid makes its way inside your HP product, it can cause damage to the product. Do not spray liquids directly on the product. Do not use aerosol sprays, solvents, abrasives, or cleaners containing hydrogen peroxide or bleach that might damage the finish.

5. Start with the display (if applicable). Wipe carefully in one direction, and move from the top of the display to the bottom. Finish with any flexible cables, like power cord, keyboard cable, and USB cables.
6. Be sure that surfaces have completely air-dried before turning the device on after cleaning.
7. Discard the gloves after each cleaning. Clean your hands immediately after you remove the gloves.

See Cleaning your computer with a disinfectant on page 15 for recommended steps to clean the high-touch, external surfaces on your computer to help prevent the spread of harmful bacteria and viruses.

## Cleaning your computer with a disinfectant

The World Health Organization (WHO) recommends cleaning surfaces, followed by disinfection, as a best practice for preventing the spread of viral respiratory illnesses and harmful bacteria.

After cleaning the external surfaces of your computer using the steps in Removing dirt and debris from your computer on page 15, you might also choose to clean the surfaces with a disinfectant. A disinfectant that is within HP's cleaning guidelines is an alcohol solution consisting of 70% isopropyl alcohol and 30% water. This solution is also known as rubbing alcohol and is sold in most stores.

Follow these steps when disinfecting high-touch, external surfaces on your computer:

1. Wear disposable gloves made of latex (or nitrile gloves, if you are latex-sensitive) when cleaning the surfaces.

2. Turn off your device and unplug the power cord and other connected external devices. Remove any installed batteries from items such as wireless keyboards.

⚠ **CAUTION:** To prevent electric shock or damage to components, never clean a product while it is turned on or plugged in.

3. Moisten a microfiber cloth with a mixture of 70% isopropyl alcohol and 30% water. The cloth should be moist, but not dripping wet.

⚠ **CAUTION:** Do not use any of the following chemicals or any solutions that contain them, including spray-based surface cleaners: bleach, peroxides (including hydrogen peroxide), acetone, ammonia, ethyl alcohol, methylene chloride, or any petroleum-based materials, such as gasoline, paint thinner, benzene, or toluene.

**IMPORTANT:** To avoid damaging the surface, avoid abrasive cloths, towels, and paper towels.

4. Wipe the exterior of the product gently with the moistened cloth.

**IMPORTANT:** Keep liquids away from the product. Avoid getting moisture in any openings. If liquid makes its way inside your HP product, it can cause damage to the product. Do not spray liquids directly on the product. Do not use aerosol sprays, solvents, abrasives, or cleaners containing hydrogen peroxide or bleach that might damage the finish.

5. Start with the display (if applicable). Wipe carefully in one direction, and move from the top of the display to the bottom. Finish with any flexible cables, like power cord, keyboard cable, and USB cables.
6. Be sure that surfaces have completely air-dried before turning the device on after cleaning.
7. Discard the gloves after each cleaning. Clean your hands immediately after you remove the gloves.

## Cleaning the computer case

Follow all safety precautions before cleaning the computer case.

To clean the computer case, follow these procedures:

- To remove light stains or dirt, use plain water with a clean, lint-free cloth or swab.
- For stronger stains, use a mild dishwashing liquid diluted with water. Rinse well by wiping it with a cloth or swab dampened with clear water.
- For stubborn stains, use isopropyl (rubbing) alcohol. No rinsing is needed because the alcohol evaporates quickly and does not leave a residue.
- After cleaning, always wipe the unit with a clean, lint-free cloth.
- Occasionally clean the air vents on the computer. Lint and other foreign matter can block the vents and limit the airflow.

## Cleaning the keyboard

Use this information to properly clean the keyboard. Follow all safety precautions before cleaning the keyboard.

To clean the tops of the keys or the keyboard body, follow the procedures described in Cleaning the computer case on page 16.

When cleaning debris from under the keys, review all rules in General cleaning safety precautions on page 14 before following these procedures.

⚠ **CAUTION:** Use safety glasses equipped with side shields before attempting to clean debris from under the keys.

- You can remove visible debris underneath or between the keys by vacuuming or shaking.
- You can use canned, pressurized air to clean debris from under the keys. Use caution because too much air pressure can dislodge lubricants applied under the wide keys.
- If you remove a key, use a specially designed key puller to prevent damage to the keys. This tool is available through many electronic supply outlets.

**IMPORTANT:** Never remove a wide leveled key (like the space bar) from the keyboard. If these keys are improperly removed or installed, the keyboard might not function properly.

- You can clean under a key with a swab moistened with isopropyl alcohol and squeezed out. Be careful not to wipe away lubricants necessary for proper key functions. Use tweezers to remove any fibers or dirt in confined areas. Allow the parts to air dry before reassembly.

## Cleaning the monitor

Follow all safety precautions before cleaning dirt and debris from your computer. Use this information to properly clean the monitor.

- Wipe the monitor screen with a clean cloth moistened with water or with a towelette designed for cleaning monitors. Do not use sprays or aerosols directly on the screen; the liquid can seep into the housing and damage a component. Never use solvents or flammable liquids on the monitor.
- To clean the monitor body, follow the procedures in Cleaning the computer case on page 16.

## Cleaning the mouse

Follow all safety precautions before cleaning dirt and debris from your computer. Use this information to properly clean the mouse.

- Clean the mouse ball by first removing the retaining plate and the ball from the housing. Pull out any debris from the ball socket and wipe the ball with a clean, dry cloth before reassembly.
- To clean the mouse body, follow the procedures in Cleaning the computer case on page 16.

# Service considerations

Keep these considerations in mind during the disassembly and assembly of the computer.

## Tools and software requirements

Servicing the computer requires these tools.

- Torx T-15 screwdriver
- Flat-bladed screwdriver (can sometimes be used in place of the Torx screwdriver)
- Phillips P1 screwdriver
- Nonconductive, nonmarking pry tool

- Diagnostics software

## Screws

The screws used in the computer are not interchangeable. They could have standard or metric threads and might be of different lengths.

If you use an incorrect screw during the reassembly process, it can damage the unit. HP strongly recommends that you keep all screws that you remove during disassembly with the removed part and then return them to their proper locations.

**IMPORTANT:** As you remove each subassembly from the computer, place it away from the work area to prevent damage.

## Cables and connectors

Use this information properly handle cables.

Apply only the tension required to seat or unseat the cables during insertion or removal from the connector. Handle cables by the connector whenever possible. In all cases, avoid bending or twisting the cables, and route the cables so that they cannot be caught or snagged by parts being removed or replaced.

**IMPORTANT:** When servicing this computer, be sure to place cables in their proper location during the reassembly process. Improper cable placement can damage the computer.

## Hard drives

Handle hard drives as delicate, precision components, and avoid all physical shock and vibration. This advice applies to failed drives as well as replacement spares.

- If a drive must be mailed, place the drive in a bubble-pack mailer or other suitable protective packaging and label the package “Fragile: Handle With Care.”
- Do not remove hard drives from the shipping package for storage. Keep hard drives in their protective packaging until they are actually mounted in the computer.
- Avoid dropping drives from any height onto any surface.
- If you are inserting or removing a hard drive, turn off the computer. Do not remove a hard drive while the computer is on or in standby mode.
- Before handling a drive, ensure that you are discharged of static electricity. While handling a drive, avoid touching the connector.
- Do not use excessive force when inserting a drive.
- Avoid exposing a hard drive to liquids, temperature extremes, or products that have magnetic fields such as monitors or speakers.

## Lithium coin cell battery

The battery that comes with the computer provides power to the real-time clock and has a minimum lifetime of approximately three years.

See the appropriate removal and replacement chapter for the chassis that you are working on for instructions on the replacement procedures.

⚠ **WARNING!** This computer contains a lithium battery. There is a risk of fire and chemical burn if the battery is handled improperly. Do not disassemble, crush, puncture, short external contacts, dispose of in water or fire, or expose it to temperatures higher than 140°F (60°C). Do not attempt to recharge the battery.

**NOTE:** Do not dispose of batteries, battery packs, and accumulators with general household waste. To forward them to recycling centers or proper disposal, use the public collection system or return them to HP, their authorized partners, or their agents.

# SATA hard drives

The Self Monitoring Analysis and Recording Technology (SMART) ATA drives for the HP Personal Computers have built-in drive failure prediction that warns the user or network administrator of an impending failure or crash of the hard drive.

The SMART drive tracks fault prediction and failure indication parameters such as reallocated sector count, spin retry count, and calibration retry count. If the drive determines that a failure is imminent, it generates a fault alert.

**Table 3-3 SATA hard drive characteristics**

| Serial ATA hard drive characteristics | |
|---|---|
| Number of pins/conductors in data cable | 7/7 |
| Number of pins in power cable | 15 |
| Maximum data cable length | 100 cm (39.37 in) |
| Data interface voltage differential | 400 mV–700 mV |
| Drive voltages | 3.3 V, 5 V, 12 V |
| Jumpers for configuring drive | N/A |
| Data transfer rate | 6.0 Gbps |

Always use an HP-approved SATA 6.0 Gbps cable because it is fully backwards compatible with the SATA 1.5 Gbps drives. Current HP desktop products ship with SATA 6.0 Gbps hard drives.

SATA data cables are susceptible to damage if overflexed. Never crease a SATA data cable and never bend it tighter than a 30 mm (1.18 in) radius.

The SATA data cable is a thin, seven-pin cable designed to transmit data for only a single drive.

# Cable management

Always follow good cable management practices when working inside the computer.

- Keep cables away from major heat sources like the heat sink.
- Keep cables clear of sliding or moveable parts to prevent them from being cut or crimped when the parts are moved.
- When folding a flat ribbon cable, never fold to a sharp crease. Sharp creases can damage the wires.

- Do not bend any cable sharply. A sharp bend can break the internal wires.
- Never bend a SATA data cable tighter than a 30 mm (1.18 in) radius.
- Never crease a SATA data cable.

# 4 Removal and replacement procedures

Adherence to these procedures and precautions is essential for proper service. After completing all necessary removal and replacement procedures, run the Diagnostics utility to verify that all components operate properly.

**NOTE:** Not all features listed in this guide are available on all computers.

**NOTE:** HP continually improves and changes product parts. For complete and current information about supported parts for your computer, go to http://partsurfer.hp.com, select your country or region, and then follow the on-screen instructions.

## Preparation for disassembly

Use this information to properly prepare to disassemble and reassemble the computer.

See Routine care, SATA drive guidelines, and disassembly preparation on page 11 for initial safety procedures.

1. Turn off the computer. If you are unsure whether the computer is off or in Hibernation, turn the computer on, and then shut it down through the operating system.

   **IMPORTANT:** Turn off the computer before disconnecting any cables.

   Regardless of the power state, voltage is always present on the system board as long as the system is plugged into an active AC outlet. In some systems, the cooling fan is on even when the computer is in the Standby or Suspend modes. Always disconnect the power cord before servicing a unit.

2. Disconnect the power from the computer by unplugging the power cord from the computer.
3. Disconnect all external devices from the computer
4. If the computer is on a stand, remove the computer from the stand.

**CAUTION:** Beware of sharp edges inside the chassis.

**NOTE:** During disassembly, label each cable as you remove it, and note its position and routing. Keep all screws with the removed components.

## Access panel

To remove the access panel, use these procedures.

Before removing the access panel, follow these steps:

- Prepare the computer for disassembly (see Preparation for disassembly on page 21).

Remove the access panel:

- Pull the release latch **(1)**, slide the panel back, and then lift if off the computer **(2)**.

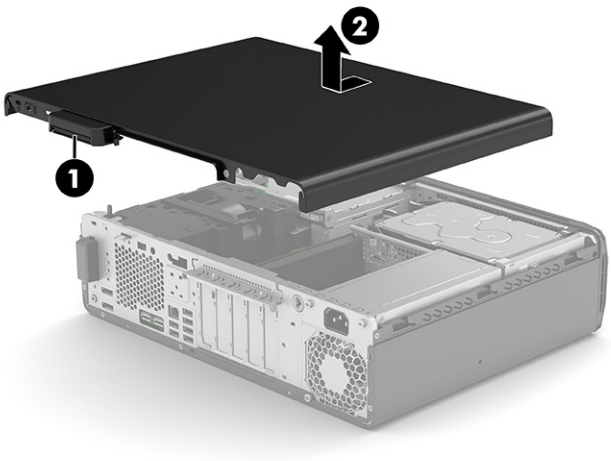


To install the access panel, reverse the removal procedure.

## Access panel release latch

To remove the access panel release latch, use these procedures.

Before removing the access panel release latch, follow these steps:

1. Prepare the computer for disassembly (see Preparation for disassembly on page 21).
2. Remove the access panel (see Access panel on page 21).

Remove the access panel release latch:

- Remove the two Torx screws that secure the latch to the access panel **(1)**, and then remove the latch **(2)**.

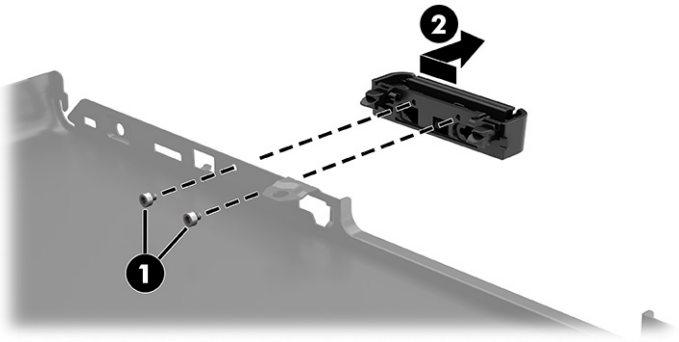


To install the access panel release latch, reverse the removal procedure.

## Optical drive

To remove the optical drive, use these procedures.

Before removing the optical drive, follow these steps:

1. Prepare the computer for disassembly (see Preparation for disassembly on page 21).
2. Remove the access panel (see Access panel on page 21).

Remove the optical drive:

1. Disconnect the power cable and data cable from the rear of the optical drive.
2. Push the release latch on the back of the drive **(1)**, and then slide the drive forward and out of the front of the computer **(2)**.

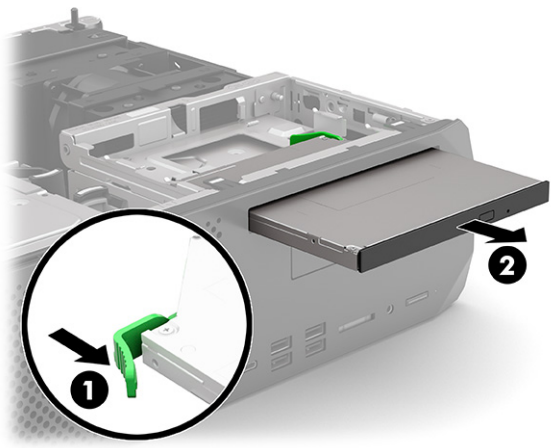


3. If you are installing an optical drive in a bay covered by a bezel blank, remove the front bezel (Front bezel on page 27), and then remove the bezel blank (Removing bezel blanks on page 28).
4. Install the release latch onto the drive. Align the small pin on the release latch with the small hole on the side of the drive and press the latch firmly onto the drive.



5. Connect the power cable and data cable to the rear of the drive, and then connect the opposite end of the data cable to one of the SATA connectors on the system board.

To install the optical drive, reverse the removal procedure.

# Riser assembly (select products only)

To remove the riser assembly and associated boards, use these procedures.

Before removing the riser assembly, follow these steps:

1. Prepare the computer for disassembly (Preparation for disassembly on page 21).
2. Remove the access panel (Access panel on page 21).

Remove the riser assembly:

1. Press the two blue release tabs **(1)**. The two levers pop up.
2. Use the two finger holds marked in blue to pull the riser assembly up and out of the computer **(2)**.

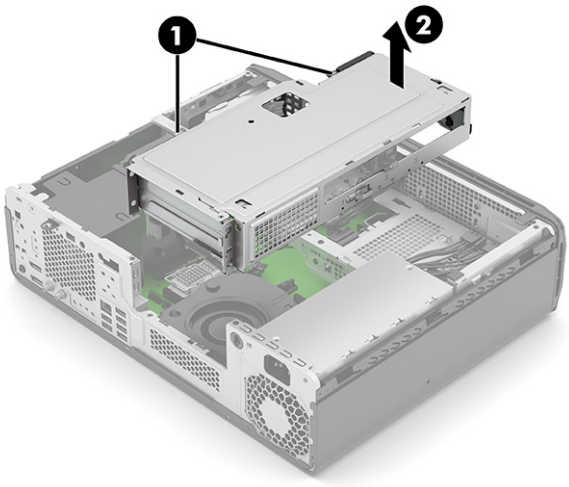


3. Press the two blue tabs on the levers on each end of the riser assembly **(1)**.
4. Rotate the back of the assembly downward **(2)**.

⚠ **CAUTION:** Be careful of sharp edges.

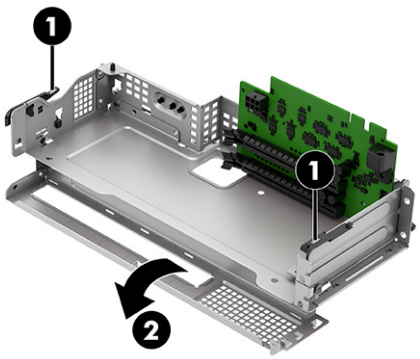

5. Pull the blank out of the riser assembly.

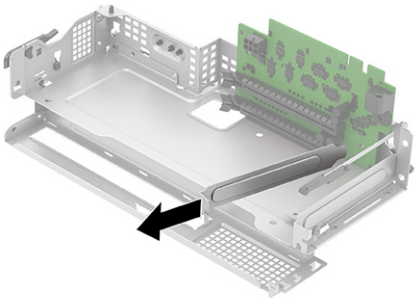

6. If you need to remove the board from the riser assembly, remove the four Torx screws **(1)**, and then remove the board from the riser assembly **(2)**.

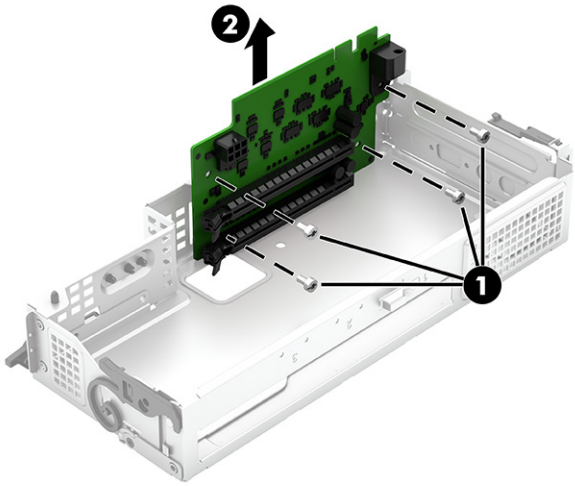

7. If you need to remove an expansion card from the assembly, pull the release arm on the expansion socket **(1)** (select products only), pull the expansion board out of the socket **(2)**, and then remove the card from the bracket **(3)**.

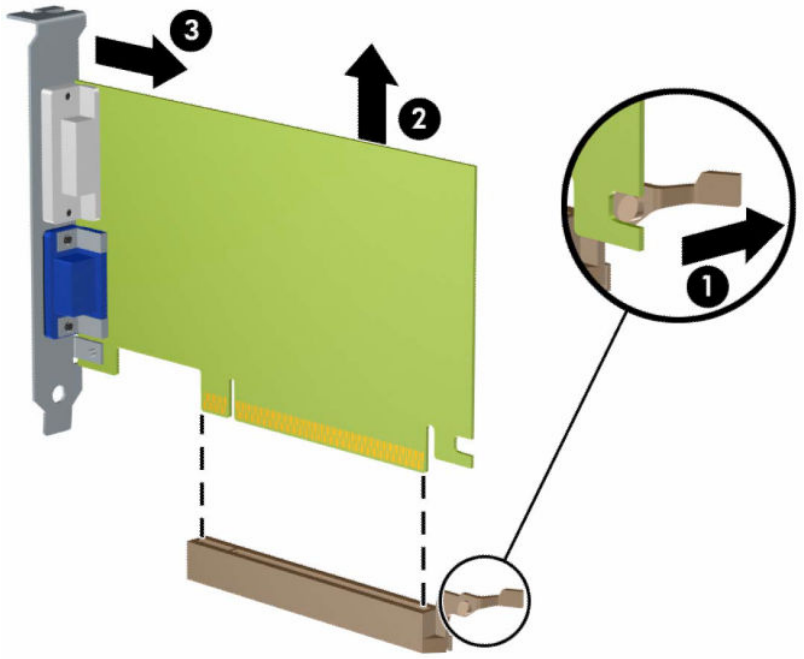


To install the riser assembly, reverse the removal procedure.

# Rear fan

To remove the rear fan, use these procedures.

Before removing the rear fan, follow these steps:

1. Prepare the computer for disassembly (see Preparation for disassembly on page 21).
2. Remove the access panel (see Access panel on page 21).

Remove the rear fan:

1. Disconnect the fan cable from the system board **(1)**.

2. Lift the fan straight up and out of the computer **(2)**.

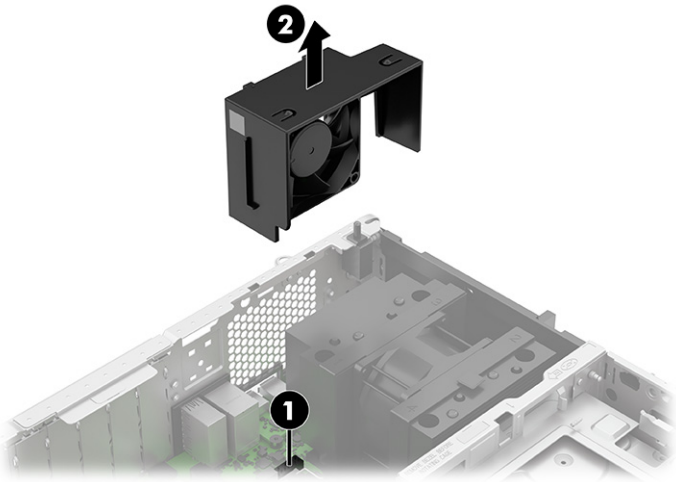


To install the rear fan, reverse the removal procedure.

# Front bezel

To remove the front bezel, use these procedures.

Before removing the front bezel, follow these steps:

1. Prepare the computer for disassembly (see Preparation for disassembly on page 21).
2. Remove the access panel (see Access panel on page 21).
3. Remove the optical drive (see Optical drive on page 22).

Remove the front bezel:

1. Lift the three tabs that secure the bezel to the computer **(1)**.
2. Rotate the top of the bezel downward **(2)**, and then remove it from the computer.

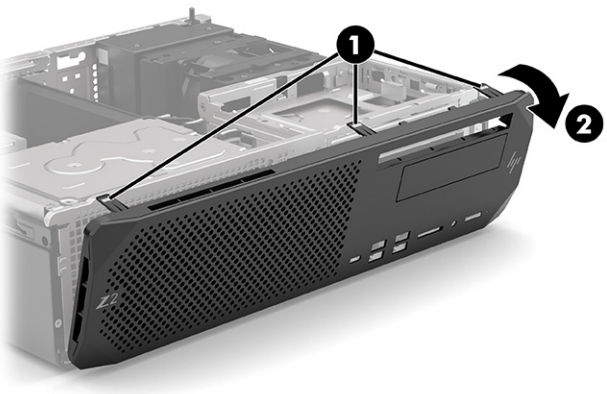


To install the front bezel, reverse the removal procedure.

# Removing bezel blanks

To remove the bezel blanks, use these procedures.

On some models, bezel blanks might cover the optical drive bay. You must remove the bezel blank before installing an optical drive.

Before removing the bezel blank, follow these steps:

1. Prepare the computer for disassembly (see Preparation for disassembly on page 21).
2. Remove the access panel (see Access panel on page 21).
3. Remove the front bezel (see Front bezel on page 27).

Remove the bezel blank:

- Press the release tab on the inside of the bezel **(1)**, and then rotate the blank off the bezel **(2)**.

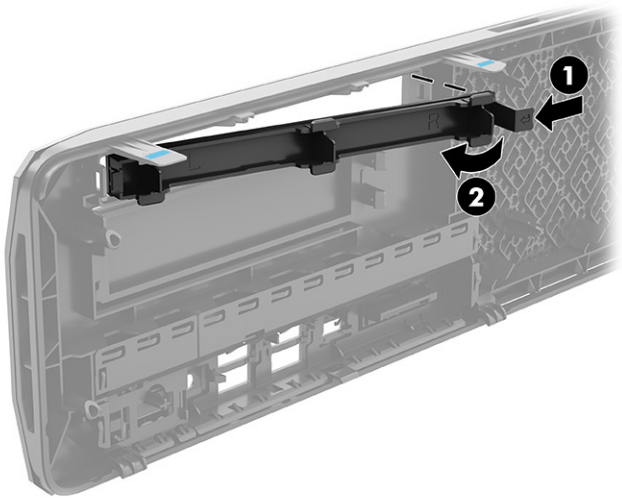


# Optional front bezel dust filter

To remove the front bezel dust filter, use these procedures.

Before removing the front bezel dust filter, follow these steps:

1. Prepare the computer for disassembly (Preparation for disassembly on page 21).
2. Remove the access panel (Access panel on page 21).
3. Remove the front bezel (Front bezel on page 27).

Remove the front bezel dust filter:

1. Position the front bezel upside-down so that you can access the inside of the bezel.
2. Press the filter release tab **(1)**.

3. Remove the filter from the bezel **(2)**.

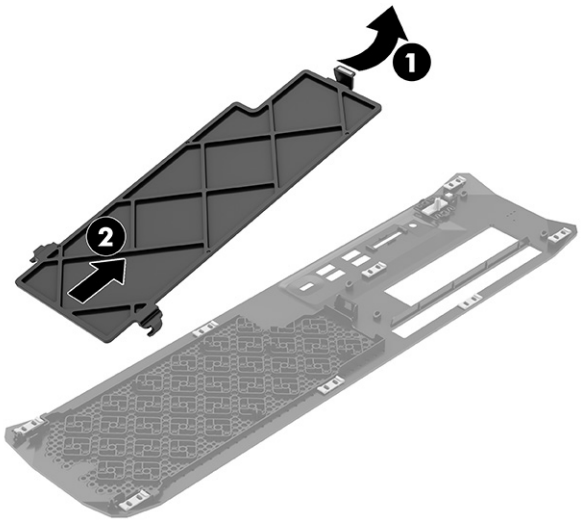


To install the front bezel dust filter, reverse the removal procedure. Press the filter onto the bezel until it snaps into place.

# Drive cage

To rotate the drive cage, use these procedures.

Before rotating the drive cage, follow these steps:

1. Prepare the computer for disassembly (see Preparation for disassembly on page 21).
2. Remove the access panel (see Access panel on page 21).
3. Remove the riser assembly (see Riser assembly (select products only) on page 24).
4. Remove the optical drive (see Optical drive on page 22).
5. Remove the front bezel (see Front bezel on page 27).

Rotate the drive cage:

- Lift under the blue tab on the drive cage and rotate the drive cage up.

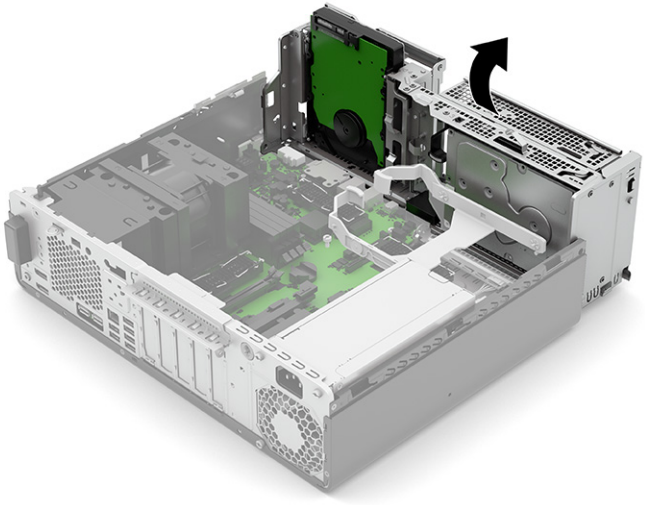

To rotate the drive cage down, reverse this step.

# Memory modules (DIMMs)

To remove the memory modules, use this information and procedures.

The memory sockets on the system board are populated with at least one preinstalled memory module. To achieve the maximum memory support, you can populate the system board with up to 128 GB of memory configured in a high-performing dual-channel mode.

Supported memory includes:

- 8 GB and 16 GB PC5-4800U, single ranked, 4800 MHz DDR5, unbuffered, non-ECC DIMMs
- 32 GB PC5-4800U, dual ranked, 4800 MHz DDR5, unbuffered, non-ECC DIMMs
- 16 GB PC5-4800E, single ranked, 4800 MHz DDR5, unbuffered, ECC DIMMs
- 32 GB PC5-4800E, dual ranked, 4800 MHz DDR5, unbuffered, ECC DIMMs
- Single and dual rank, 16 Gb based DIMMs
- System ECC is supported on unbuffered ECC DIMMs

**NOTE:** The system might not operate properly if you install unsupported memory modules.

There are four memory sockets on the system board, with two channels per CPU, two sockets per channel. The sockets are labeled DIMM1, DIMM2, DIMM3, and DIMM4.

For maximum memory performance, evenly distribute total desired memory capacity across all operational channels. Proper individual DIMM capacity selection is essential to maximizing performance.

### Platform capabilities

Though the memory modules can run up to 4800 MHz, the current platform supports a maximum memory speed of 4400 MHz.

System speed is determined by several factors:

Table 4-1 System speed factors

| Module configuration | Description of configuration | Maximum memory speed* |
|---|---|---|
| Single DIMM per channel | Configurations with only 1 or 2 DIMM modules installed only in black slots | 4400 MHz |
| Two single-ranked DIMMs in a channel | Configurations with 3 or 4 single ranked DIMMs (8 GB and 16 GB) installed | 4000 MHz |
| Two dual-ranked DIMMs in a channel | Configurations with 3 or 4 dual-ranked DIMMs (32 GB) installed | 3600 MHz |
| * Actual memory speed is dependent on the processor. | | |

### Recommendations for upgrading memory

To make sure that the system can run at maximum speed:

- Use the same capacity memory that is already installed in the computer.
- Buy modules in pairs.
- Move similar modules into the same channel (memory slots 1 and 2) and install new modules together in the second channel (slots 3 and 4).

### Memory features

- Single-bit errors are automatically corrected.
- Detected multi-bit errors cause the system to immediately reboot and halt with an F1 prompt error message.

NOTE: Although HP does support non-ECC memory on this platform, non-ECC memory does not fully detect or correct single-bit or multi-bit errors, which can cause instability or corruption of data in the platform.

### Loading rules

- Each channel includes two sockets. Load DIMM slots 1 and 3 first, then 2 and 4. Do not load slot 2 unless slot 1 is loaded. Do not load slot 4 unless slot 3 is loaded.
- If mixing dual-ranked and single-ranked DIMMs, load the dual-ranked DIMMs in a slots 1 and 2 and load single-ranked DIMMs in slots 3 and 4.

NOTE: Single-channel and unbalanced dual-channel memory configurations results in inferior graphics performance.

IMPORTANT: You must disconnect the power cord and wait approximately 30 seconds for the power to drain before adding or removing memory modules. Regardless of the power state, voltage is always supplied to the memory modules as long as the computer is plugged into an active AC outlet. Adding or removing memory modules while voltage is present can cause irreparable damage to the memory modules or system board.

The memory module sockets have gold-plated metal contacts. When upgrading the memory, it is important to use memory modules with gold-plated metal contacts to prevent corrosion, oxidation, or both resulting from having incompatible metals in contact with each other.

Static electricity can damage the electronic components of the computer or optional cards. Before beginning these procedures, be sure that you are discharged of static electricity by briefly touching a grounded metal object. For more information, see Electrostatic discharge information on page 11.

When handling a memory module, be careful not to touch any of the contacts. Doing so can damage the module.

Before replacing the memory modules, follow these steps:

1. Prepare the computer for disassembly (see Preparation for disassembly on page 21).
2. Remove the access panel (see Access panel on page 21).
3. Remove the riser assembly (see Riser assembly (select products only) on page 24).
4. Remove the optical drive (see Optical drive on page 22).
5. Remove the front bezel (see Front bezel on page 27).
6. Rotate the drive cage to the upright position (see Drive cage on page 29).

Replace a memory module:

1. To remove a memory module, open both latches of the memory module socket **(1)**, and then remove the memory module from the socket **(2)**.

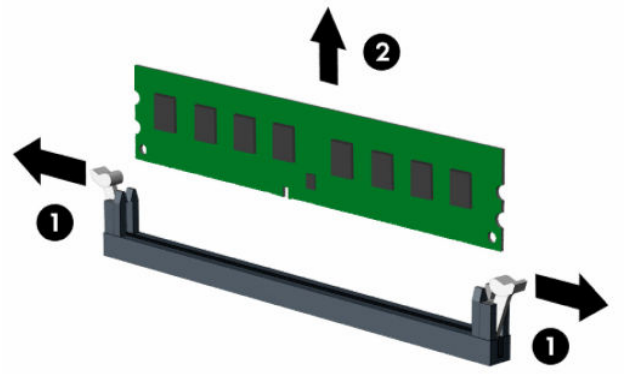

2. To install a memory module, open both latches of the memory module socket **(1)**, and insert the memory module into the socket **(2)**. Press the module down into the socket so that the module is fully inserted and properly seated. Be sure that the latches are in the closed position **(3)**.

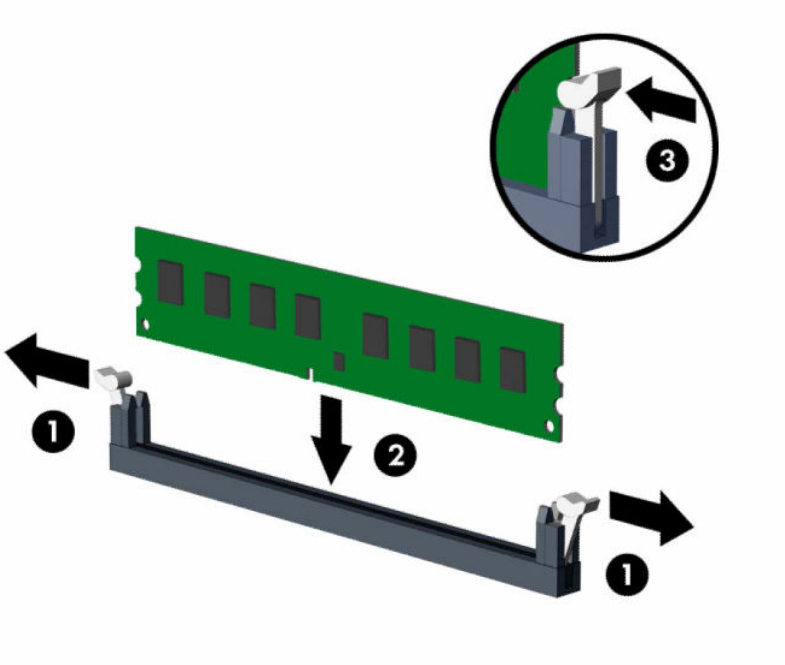


**NOTE:** A memory module can be installed in only one way. Match the notch on the module with the tab on the memory socket.

The computer automatically recognizes the additional memory when you turn on the computer.

# WLAN module

To remove the WLAN module, use these procedures.

Before removing the WLAN module, follow these steps:

1. Prepare the computer for disassembly (see Preparation for disassembly on page 21).
2. Remove the access panel (see Access panel on page 21).
3. Remove the riser assembly (see Riser assembly (select products only) on page 24).
4. Remove the optical drive (see Optical drive on page 22).
5. Remove the front bezel (see Front bezel on page 27).
6. Rotate the drive cage to the upright position (see Drive cage on page 29).

Remove the WLAN module:

1. Remove the plastic shield that covers the antennas where they are connected to the module **(1)**.

2. Disconnect the antenna cables from the module **(2)**.

NOTE: The WLAN antenna cable labeled 1/AUX connects to the WLAN module AUX terminal. The WLAN antenna cable labeled 2/MAIN connects to the WLAN module MAIN terminal.

3. Remove the screw **(3)** that secures the module to the computer.

4. Pull the module to remove it from the socket **(4)**.

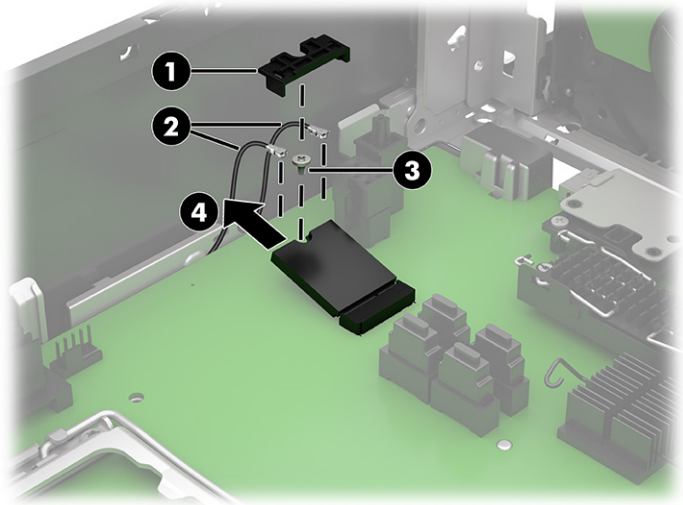


5. If the WLAN antenna is not connected to the terminal on the WLAN module, a protective sleeve must be installed on the antenna connector, as shown in the following illustration.

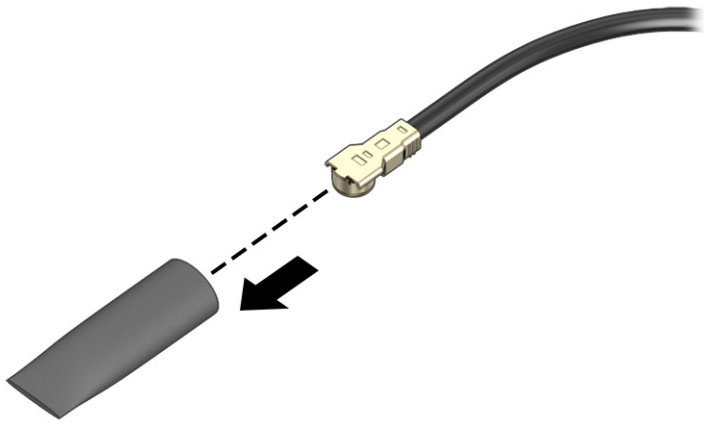

To install the WLAN module, reverse the removal procedure.

NOTE: WLAN modules are designed with a notch to prevent incorrect insertion.

# Battery

To remove the battery, use these procedures. The battery that comes with the computer provides power to the real-time clock. When replacing the battery, use a battery equivalent to the battery originally installed in the computer. The computer comes with a 3 V lithium coin cell battery.

⚠ **WARNING!** The computer contains an internal lithium manganese dioxide battery. There is a risk of fire and burns if the battery is not handled properly. To reduce the risk of personal injury:

Do not attempt to recharge the battery.

Do not expose to temperatures higher than 60°C (149°F).

Do not disassemble, crush, puncture, short external contacts, or dispose of in fire or water.

Replace the battery only with the HP spare part that is designated for this product.

**IMPORTANT:** Before replacing the battery, back up the computer CMOS settings. When the battery is removed or replaced, the CMOS settings are cleared.

Static electricity can damage the electronic components of the computer or optional equipment. Before beginning these procedures, be sure that you are discharged of static electricity by briefly touching a grounded metal object.

**NOTE:** You can extend the lifetime of the lithium battery by plugging the computer into an AC outlet. The lithium battery is used only when the computer is not connected to AC power.

HP encourages customers to recycle used electronic hardware, HP original print cartridges, and rechargeable batteries. For more information about recycling programs, go to http://www.hp.com/recycle.

Before removing the battery, follow these steps:

1. Prepare the computer for disassembly (see Preparation for disassembly on page 21).
2. Remove the access panel (see Access panel on page 21).
3. Remove the riser assembly (see Riser assembly (select products only) on page 24).
4. Remove the optical drive (see Optical drive on page 22).
5. Remove the front bezel (see Front bezel on page 27).
6. Rotate the drive cage to the upright position (see Drive cage on page 29).

Remove the battery:

1. To release the battery from its holder, squeeze the metal clamp that extends above one edge of the battery **(1)**. When the battery pops up, lift it out **(2)**.



2. Slide the replacement battery into position, positive side up. The battery holder automatically secures the battery in the proper position.

# Speaker

To remove the speaker, use these procedures.

Before removing the speaker, follow these steps:

1. Prepare the computer for disassembly (see Preparation for disassembly on page 21).
2. Remove the access panel (see Access panel on page 21).
3. Remove the riser assembly (see Riser assembly (select products only) on page 24).
4. Remove the optical drive (see Optical drive on page 22).
5. Remove the front bezel (see Front bezel on page 27).
6. Rotate the drive cage to the upright position (see Drive cage on page 29).

Remove the speaker:

1. Disconnect the speaker cable from the system board connector **(1)**.
2. Remove the cable from the clip in the chassis **(2)**.
3. Pull the two rubber posts away from each other to disengage them from the speaker **(3)**.

4. Lift speaker straight up to remove it from the two rubber holders **(4)**.

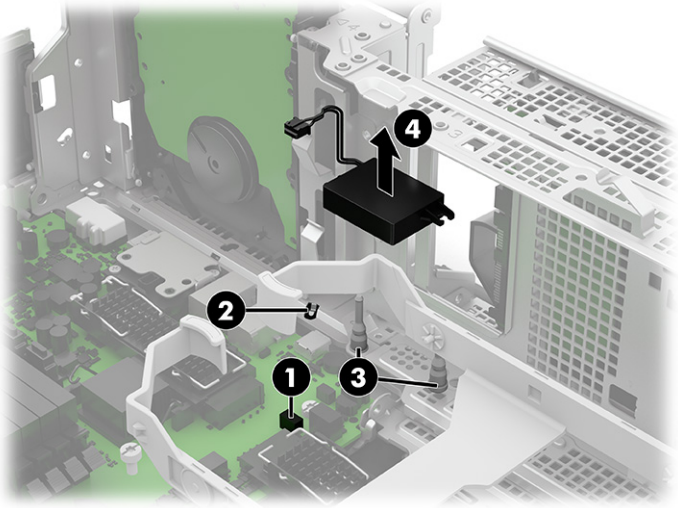


To install the speaker, reverse the removal procedures.

# Drives

This section provides information about removing and installing drives.

## Removing and installing drives

When installing drives, follow these guidelines:

- The primary Serial ATA (SATA) hard drive must be connected to the dark-blue primary SATA connector labeled SATA0 on the system board.
- Connect secondary hard drives and optical drives to any of the light-blue SATA connectors labeled SATA1, SATA2, and SATA3 on the system board.
- You must install mounting screws for hard drives to ensure the drive will line up correctly in the drive cage and lock in place.

**IMPORTANT:** To prevent loss of work and damage to the computer or drive:

If you are inserting or removing a drive, shut down the operating system properly, turn off the computer, and unplug the power cord. Do not remove a drive while the computer is on or in standby mode.

Before handling a drive, be sure that you are discharged of static electricity. While handling a drive, avoid touching the connector.

Handle a drive carefully; do not drop it.

Do not use excessive force when inserting a drive.

Avoid exposing a hard drive to liquids, temperature extremes, or products that have magnetic fields such as monitors or speakers.

If a drive must be mailed, place the drive in a bubble-pack mailer or other protective packaging and label the package “Fragile: Handle With Care.”

## Removing the left-side 3.5 inch hard drive

To remove the left-side 3.5-inch hard drive, use these procedures.

Before removing the left-side hard drive, follow these steps:

1. Prepare the computer for disassembly (see Preparation for disassembly on page 21).
2. Remove the access panel (see Access panel on page 21).
3. Remove the optical drive (see Optical drive on page 22).
4. Remove the front bezel (see Front bezel on page 27).
5. Rotate the drive cage to the upright position (see Drive cage on page 29).

Remove the hard drive:

1. Disconnect the power and data cables from the back of the hard drive **(1)**.
2. Squeeze the release latches toward each other **(2)**, and then pull the drive out of the drive bay **(3)**.

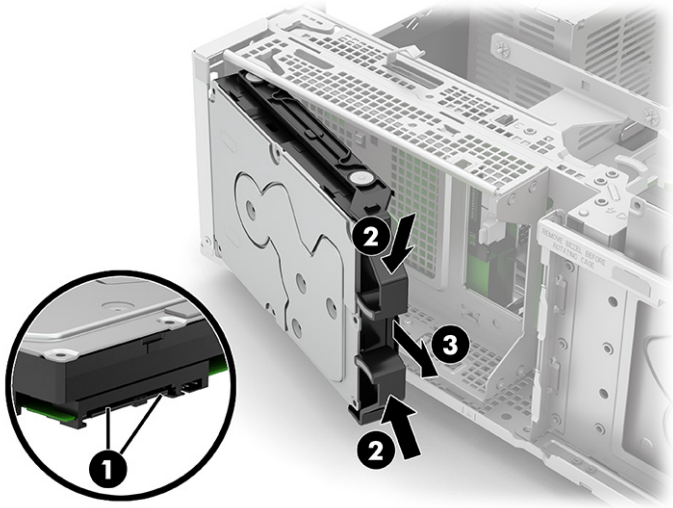


3. To remove the drive bracket from the drive, separate the bracket retention arms **(1)** from the hard drive, making sure the retention pins fully release from the drive.

4. Remove the hard drive **(2)** from the bracket.

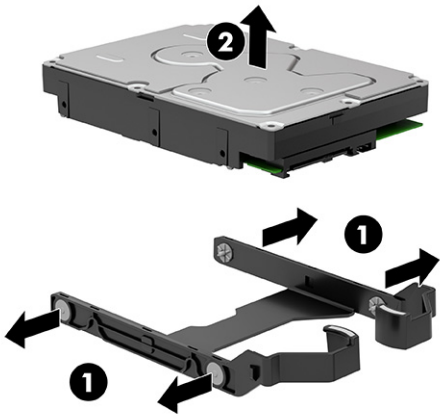


## Removing the right-side 3.5 inch hard drive

To remove the right-side 3.5-inch hard drive, use these procedures.

Before removing the right-side hard drive, follow these steps:

1. Prepare the computer for disassembly (see Preparation for disassembly on page 21).
2. Remove the access panel (see Access panel on page 21).
3. Remove the optical drive (see Optical drive on page 22).
4. Remove the front bezel (see Front bezel on page 27).
5. Rotate the drive cage to the upright position (see Drive cage on page 29).

Remove the hard drive:

1. Disconnect the cables from the drive **(1)**.
2. Remove the cables from the clip **(2)**.
3. Pull the release lever **(3)**.

4. Slide the drive up, and then remove it from the drive bay **(4)**.

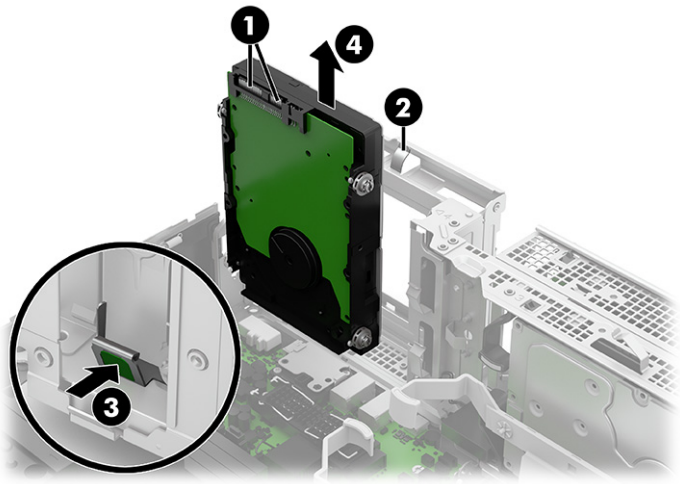


## Solid-state drive

To remove the solid-state drive module, use these procedures. The system board offers two solid-state drive connectors.

Before removing the solid-state drive module, follow these steps:

1. Prepare the computer for disassembly (see Preparation for disassembly on page 21).
2. Remove the access panel (see Access panel on page 21).
3. Remove the optical drive (see Optical drive on page 22).
4. Remove the front bezel (see Front bezel on page 27).
5. Rotate the drive cage to the upright position (see Drive cage on page 29).

Remove the solid-state drive module:

1. Remove the screw that secures the drive.

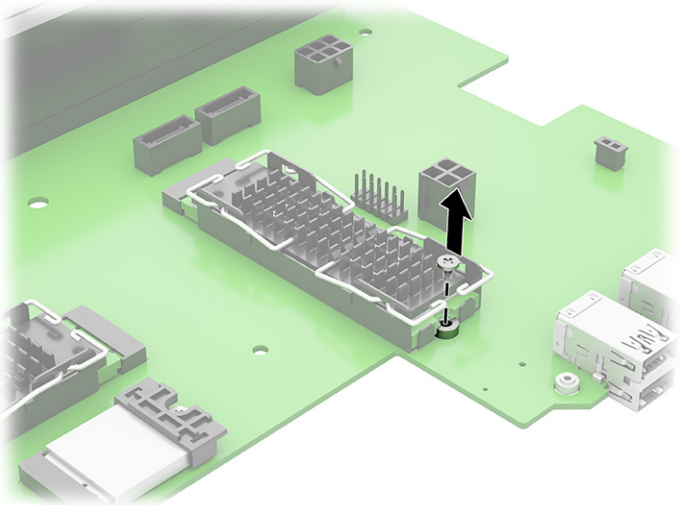

2. Lift the drive up **(1)**, and then pull the drive out of the system board connector **(2)**.

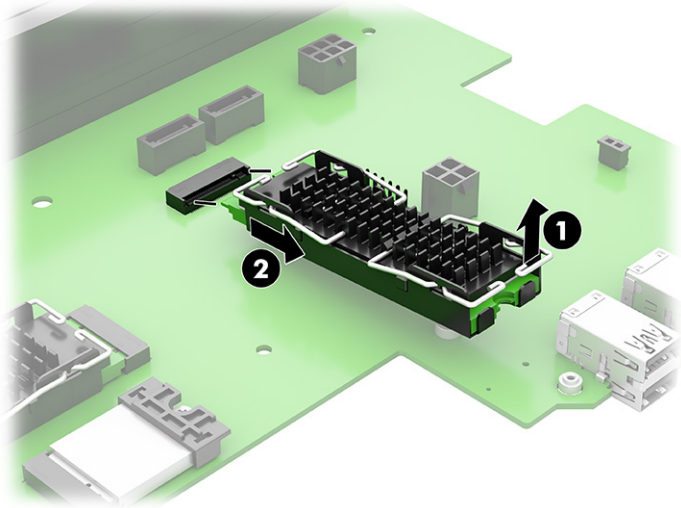


To install the solid-state drive module, reverse the removal procedure.

# Expansion card

The computer has one PCI Express ×1 expansion socket, two PCI Express ×16 expansion sockets, and one PCI Express ×8 expansion socket.

**NOTE:** You can install a PCI Express ×1, ×8, or ×16 expansion card in the PCI Express ×16 socket.

For dual graphics card configurations, the first (primary) card must be installed in the PCI Express ×16 socket.

Before replacing the expansion modules, follow these steps:

1. Prepare the computer for disassembly (see Preparation for disassembly on page 21).
2. Remove the access panel (see Access panel on page 21).

To replace or add an expansion card:

1. Locate the correct vacant expansion socket on the system board and the corresponding expansion slot on the back of the computer chassis.

2. Release the slot cover retention latch that secures the slot covers by lifting the tab on the latch and rotating the latch to the open position.

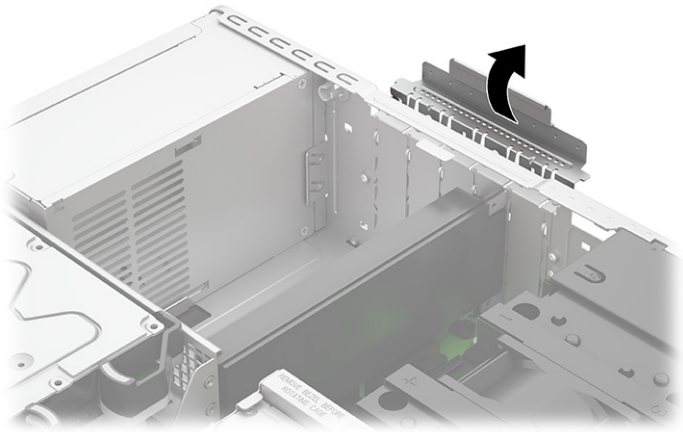

3. Before installing an expansion card, remove the expansion slot cover or the existing expansion card.

NOTE: Before removing an installed expansion card, disconnect any cables that are attached to the expansion card.

a. If you are installing an expansion card in a vacant socket, remove the appropriate expansion slot cover on the back of the chassis.

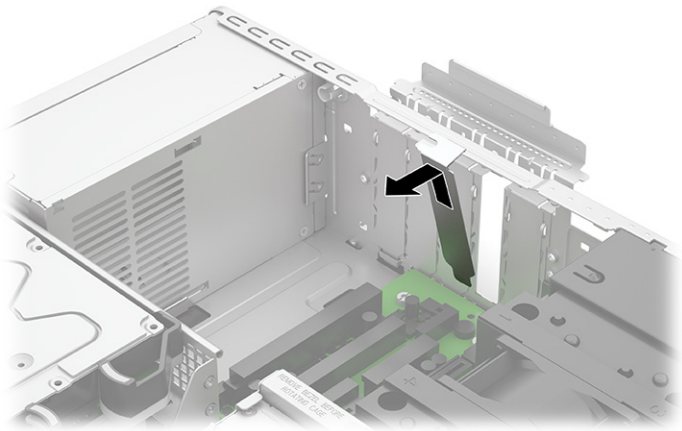

b. If you are removing a PCI Express ×1 card, hold the card at each end and carefully rock it back and forth until the connectors pull free from the socket. Lift the card straight up **(1)**, and then

away from the inside of the chassis **(2)** to remove it. Be sure not to scrape the card against other components.

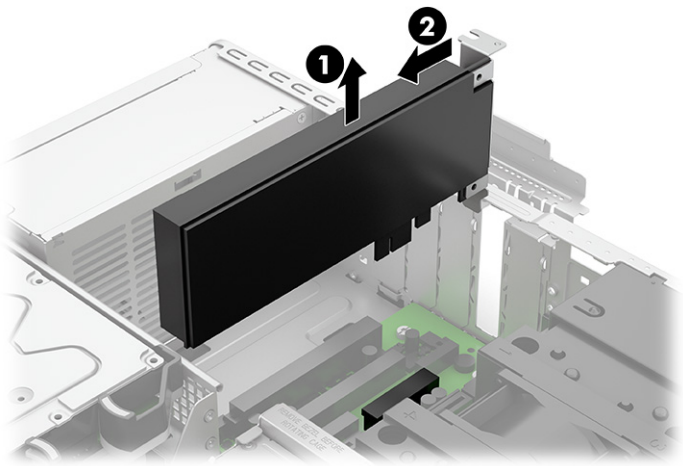


c. If you are removing a PCI Express ×16 card, pull the retention arm on the back of the expansion socket away from the card **(1)** and carefully rock the card back and forth until the connectors pull free from the socket. Lift the card straight up **(2)** and then away from the inside of the chassis to remove it **(3)**. Be sure not to scrape the card against other components.

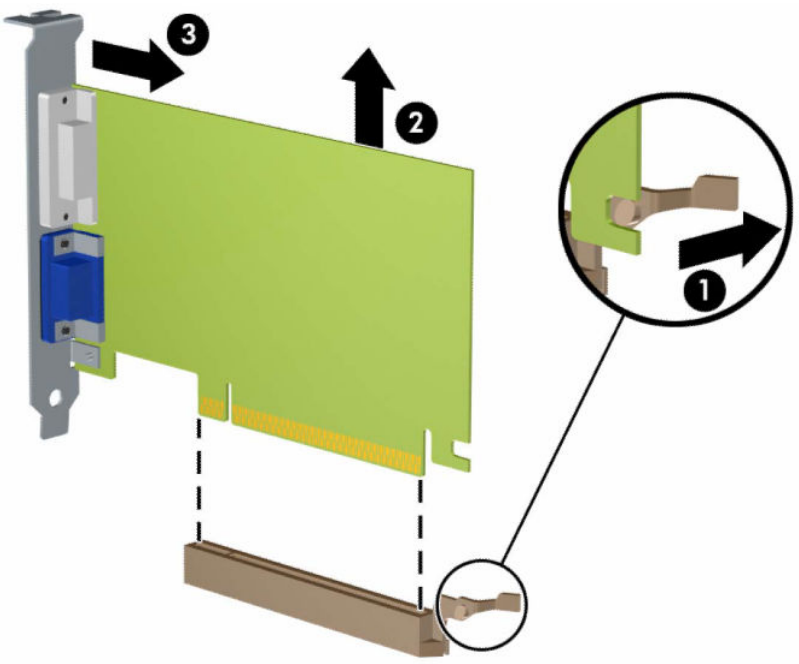


4. Store a removed card in antistatic packaging.
5. If you are not installing a new expansion card, install an expansion slot cover to close the open slot.

⚠ **CAUTION:** After removing an expansion card, you must replace it with a new card or expansion slot cover for proper cooling of internal components during operation.

6. Reverse the removal procedures to install a new expansion card. Be sure to rotate the slot cover retention latch down into place after installation.
7. After installing an expansion card, connect external cables to the installed card and internal cables to the system board, if needed.
8. Reassemble and reconfigure the computer, if necessary.

# Power supply

To remove the power supply, use these procedures.

Before removing the power supply, follow these steps:

1. Prepare the computer for disassembly (see Preparation for disassembly on page 21).
2. Remove the access panel (see Access panel on page 21).
3. Remove the optical drive (see Optical drive on page 22).
4. Remove the front bezel (see Front bezel on page 27).
5. Rotate the drive cage to the upright position (see Drive cage on page 29).

Remove the power supply:

1. Disconnect the power supply cables from the following system board connectors:

   PWRCPU **(1)**

   **NOTE:** Some models have only one PWRCPU connector.

   PWR **(2)**

   PWRCMD **(3)**
2. Remove the power supply cables from the clips built into the bottom of the chassis **(4)**.
3. Remove the three Torx screws **(5)** that connect the power supply to the rear of the chassis.

4. Press the release lever at the front of the power supply **(6)**, slide the power supply toward the front of the computer, and then lift the power supply out of the chassis **(7)**.

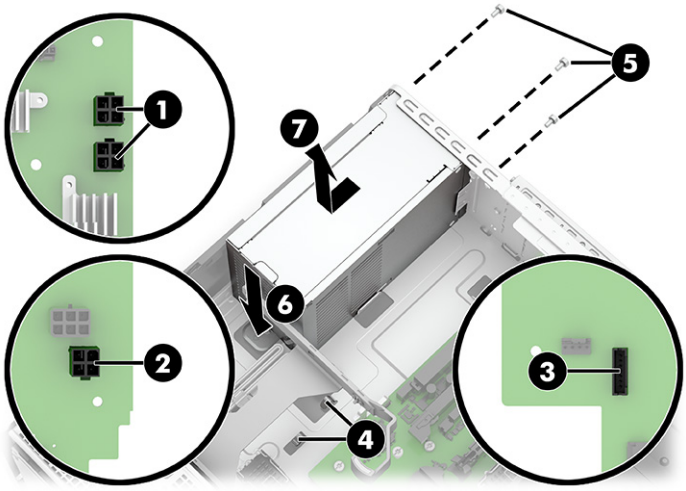


To install the power supply, reverse the removal procedures.

# Expansion card fan (select products only)

To remove the expansion card fan, use these procedures.

Before removing the expansion card fan, follow these steps:

1. Prepare the computer for disassembly (see Preparation for disassembly on page 21).
2. Remove the access panel (see Access panel on page 21).
3. Remove the riser assembly (see Riser assembly (select products only) on page 24).

Remove the expansion card fan:

1. Disconnect the fan cable from the system board **(1)**.
2. Pull the release level **(2)**, and then remove the fan from the computer **(3)**.

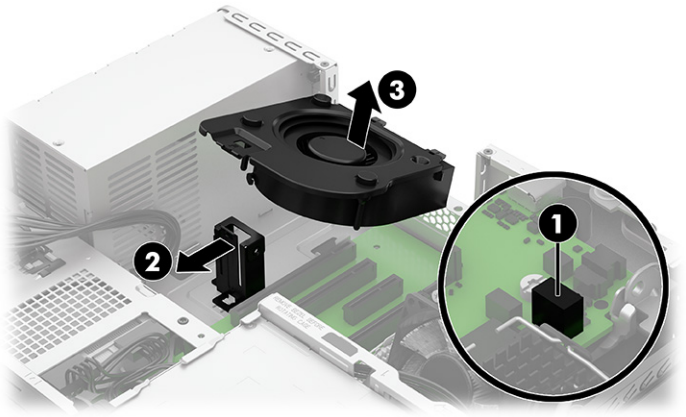


To install the expansion card fan, reverse the removal procedure.

# Hood lock

To remove the hood lock, use these procedures.

Before removing the hood lock, follow these steps:

1. Prepare the computer for disassembly (Preparation for disassembly on page 21).
2. Remove the access panel (Access panel on page 21).

Remove the hood lock:

1. Disconnect the hood lock cable **(1)** from the system board.
2. Remove the security screw **(2)** that secures the lock to the rear of chassis.
3. Pull the hood lock into the chassis to remove it **(3)**.

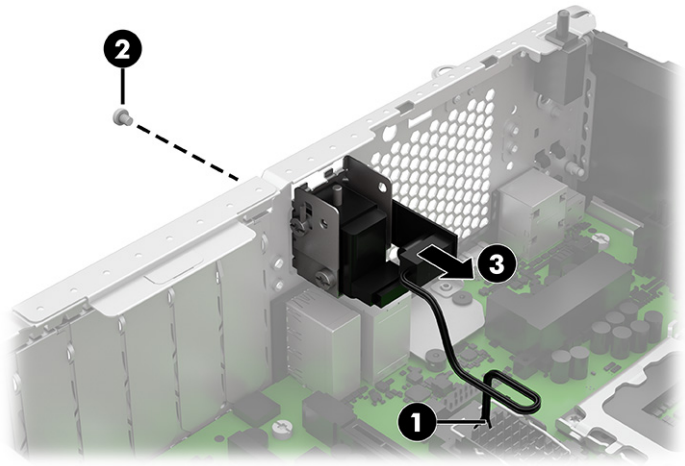


To install the hood lock, reverse the removal procedure.

# Hood sensor

To remove the hood sensor, use these procedures.

Before removing the hood sensor, follow these steps:

1. Prepare the computer for disassembly (see Preparation for disassembly on page 21).
2. Remove the access panel (see Access panel on page 21).
3. Remove the rear fan (see Rear fan on page 26).

Remove the hood sensor:

1. Disconnect the hood sensor cable **(1)** from the system board.

2. Using a screwdriver or similar tool, slide the sensor out of the slot in the rear of the chassis **(2)**.

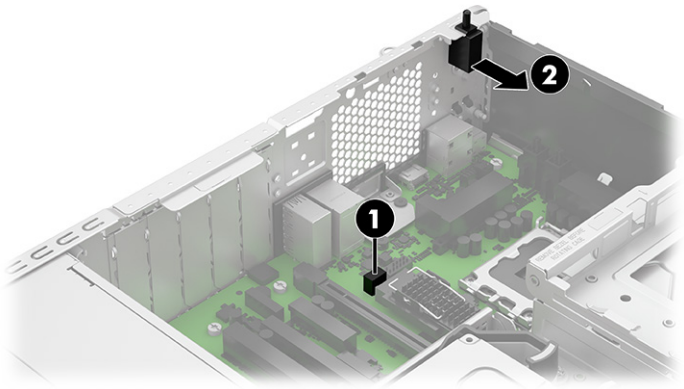


To install the hood sensor, reverse the removal procedure.

# Card reader

To remove the card reader, use these procedures.

Before removing the card reader, follow these steps:

1. Prepare the computer for disassembly (see Preparation for disassembly on page 21).
2. Remove the access panel (see Access panel on page 21).
3. Remove the riser assembly (see Riser assembly (select products only) on page 24).
4. Remove the optical drive (see Optical drive on page 22).
5. Remove the front bezel (see Front bezel on page 27).
6. Rotate the drive cage to the upright position (see Drive cage on page 29).

Remove the card reader:

1. Disconnect the cable from the system board **(1)**.
2. From the inside of the chassis, remove the Phillips screw that secures the card reader to the system board **(2)**.

3. Remove the card reader from the computer **(3)**.

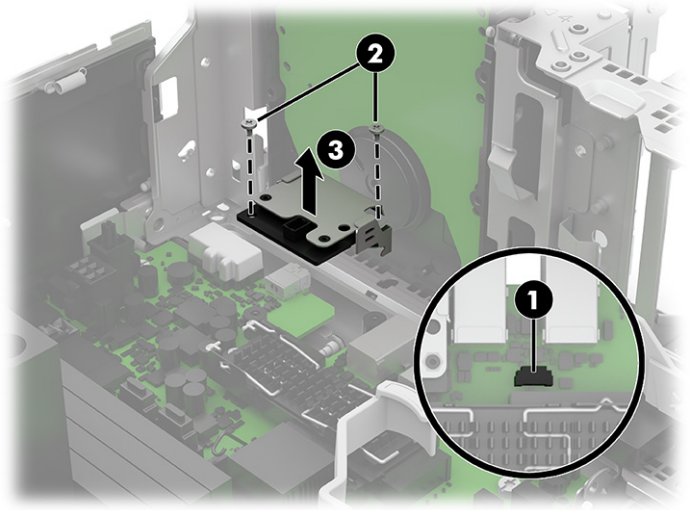


To install the card reader, reverse the removal procedure.

# Heat sink

To remove the heat sink, use these procedures.

**IMPORTANT:** The bond between the heat sink and the processor can be very tight.

If the computer will turn on, before removing the heat sink, turn on the computer until it warms the heat sink. Warming the heat sink loosens the bond between the heat sink and the processor, thereby making it easier to separate them.

Do not pull the processor out of the socket when you lift the heat sink, especially if you cannot warm the heat sink before removal. Inadvertently removing the processor can damage the pins.

Before removing the heat sink, follow these steps:

1. Prepare the computer for disassembly (see Preparation for disassembly on page 21).
2. Remove the access panel (see Access panel on page 21).
3. Remove the rear fan (see Rear fan on page 26).

Remove the heat sink:

1. Disconnect the fan cable from the system board **(1)**.
2. In the order indicated on the heat sink, loosen the four captive Torx screws **(2)**.

**IMPORTANT:** Remove heat sink retaining screws in diagonally opposite pairs (as in an X) to even the downward forces on the processor. The pins on the socket are fragile, and damage to them might require replacing the system board.

3. Remove the heat sink from the computer **(3)**.

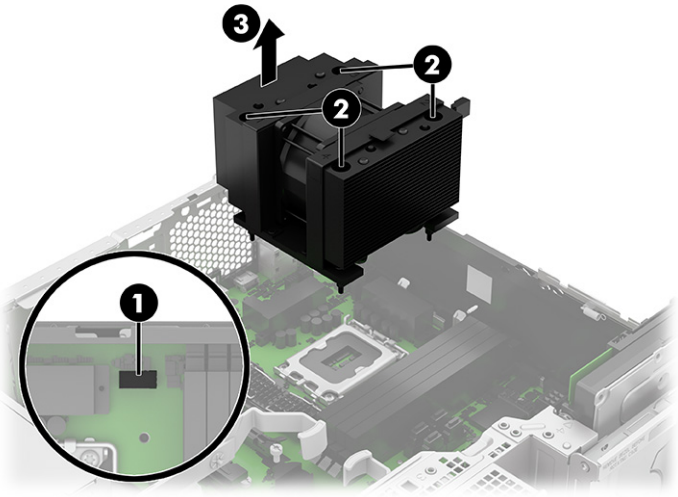


4. Thoroughly clean the thermal material from the surfaces of the heat sink and the system board components each time the heat sink is removed. Replacement thermal material is included with the heat sink and system board spare part kits. The following illustration shows the replacement thermal material locations.

   Thermal paste is used on the heat sink **(1)** and on the processor **(2)**.

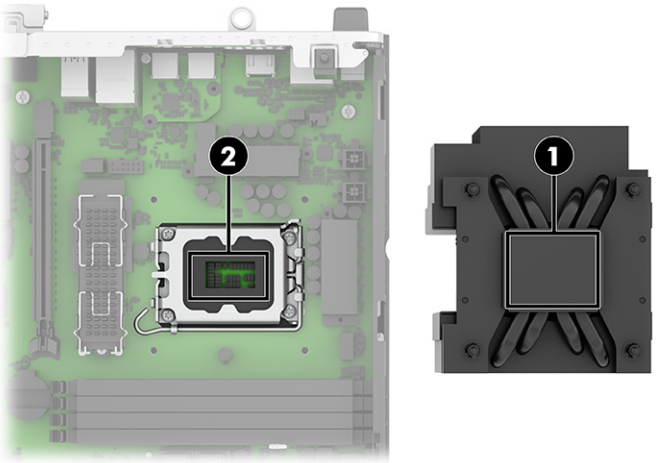


**IMPORTANT:** Tighten heat sink retaining screws in diagonally opposite pairs (as in an X) to evenly seat the heat sink on the processor to avoid damage that could require replacing the system board.

To replace the heat sink, reverse the removal procedures.

# Processor

To remove the processor, use these procedures.

Before removing the processor, follow these steps:

1. Prepare the computer for disassembly (see Preparation for disassembly on page 21).
2. Remove the access panel (see Access panel on page 21).
3. Remove the rear fan (see Rear fan on page 26).
4. Remove the heat sink (see Heat sink on page 48).

Remove the processor:

1. Pull the locking lever away from the processor **(1)**, and then rotate the lever to its full open position **(2)**.
2. Raise and rotate the microprocessor retainer to its fully open position **(3)**.
3. Carefully lift the processor from the socket **(4)**.

**IMPORTANT:** Do not handle the pins in the processor socket. These pins are fragile, and handling them could cause irreparable damage. If pins are damaged, you might have to replace the system board.

The heat sink must be installed within 24 hours of installing the processor to prevent damage to the processor's solder connections.

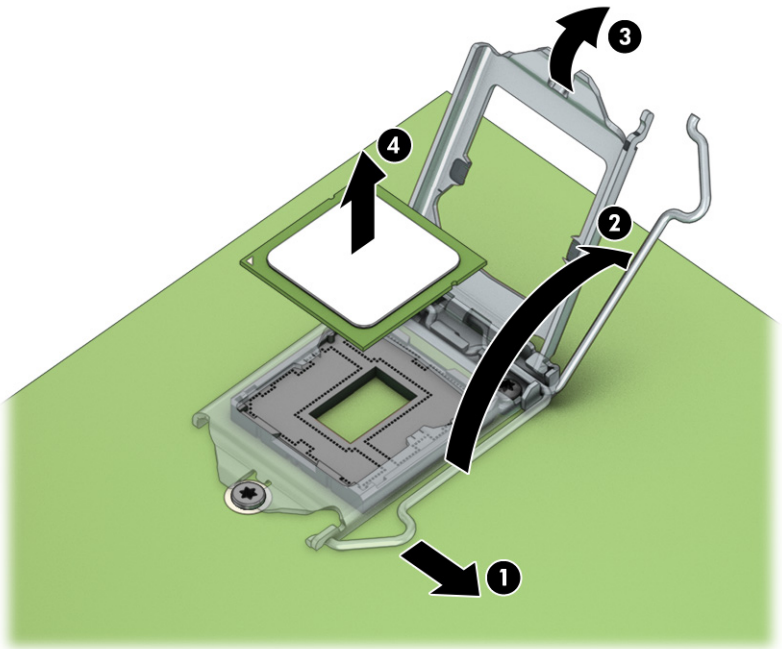


To replace the processor, reverse the removal procedures.

**NOTE:** After installing a new processor onto the system board, always update the system ROM to ensure that the latest version of the BIOS is being used on the computer.

# Option board

To remove the option board, use these procedures.

Before removing the option board, follow these steps:

1. Prepare the computer for disassembly (see Preparation for disassembly on page 21).

2. Remove the access panel (see Access panel on page 21).
3. Remove the rear fan (see Rear fan on page 26).
4. Remove the heat sink (see Heat sink on page 48).

Remove the option board:

1. Remove the two Phillips screws **(1)** that secure the board to the system board.
2. Lift to disengage the board from the system board connector, and then remove the option board from the computer **(2)**.

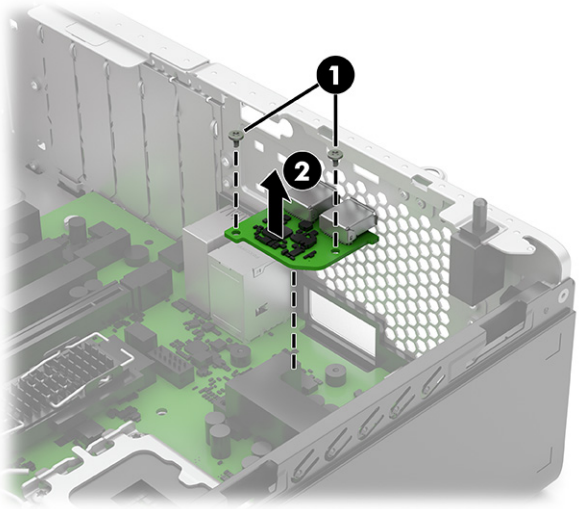


To install the option board, reverse the removal procedure.

# System board

To remove the system board, use these procedures.

**NOTE:** All system board spare part kits include replacement thermal material.

Before removing the system board, follow these steps:

1. Prepare the computer for disassembly (see Preparation for disassembly on page 21).
2. Remove the access panel (see Access panel on page 21).
3. Remove the riser assembly (see Riser assembly (select products only) on page 24).
4. Remove the optical drive (see Optical drive on page 22).
5. Remove the front bezel (see Front bezel on page 27).
6. Rotate the drive cage to the upright position (see Drive cage on page 29).
7. When replacing the system board, be sure that the following components are removed from the defective system board and installed on the replacement system board:
   - Memory modules (see Memory modules (DIMMs) on page 30)

- Heat sink (see Heat sink on page 48)
- Solid-state drive (see Solid-state drive on page 40)
- WLAN module (see WLAN module on page 33)
- Option board (see Option board on page 50)
- Expansion cards (see Expansion card on page 41)
- Processor (see Processor on page 49)

Remove the system board:

1. Disconnect all cables from the system board and note their locations for installation.
2. Remove the six Torx screws **(1)** that secure the system board to the computer.
3. Remove the 6 mm hex screw (full-height models) or Torx screw (low-profile models) **(2)** that secures the system board to the computer.

**NOTE:** The hex screw is used only on full-height models. Low-profile models use a standard screw.

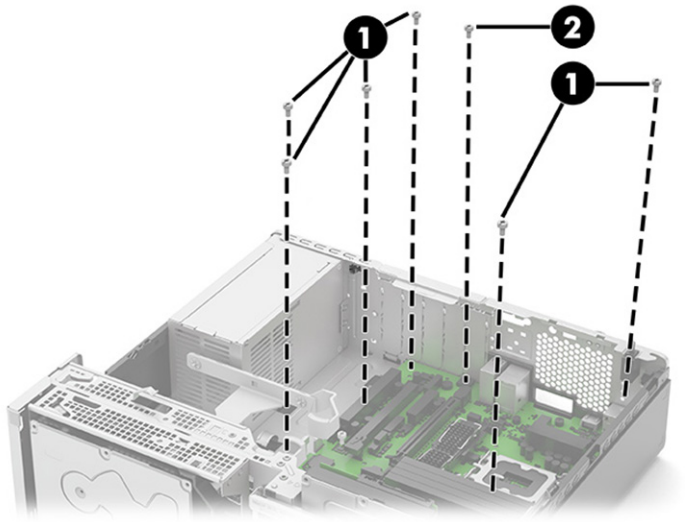

4. Lift the front of the system board **(1)**, and then remove it from the computer **(2)**.

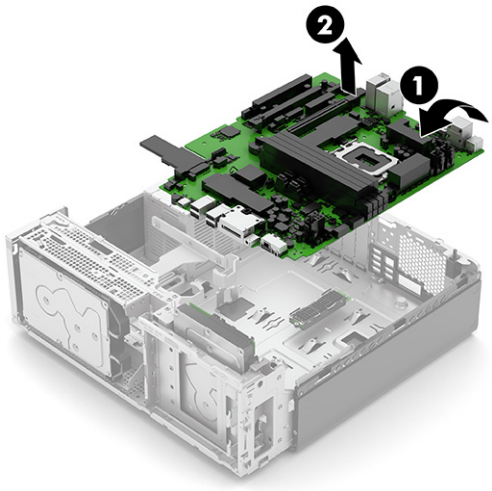


To install the system board, reverse the removal procedures.

**NOTE:** When replacing the system board, you must change the chassis serial number in the BIOS.

When replacing the system board, you must reprogram the SMBIOS information about the affected computer. Failure to reprogram the board results in eventual failure, such as an activation failure (when you would have to reactivate the computer) or a system recovery failure.

Update the SMBIOS information in Computer Setup.

# System board connections

Use this illustration and table to determine system board connection locations.

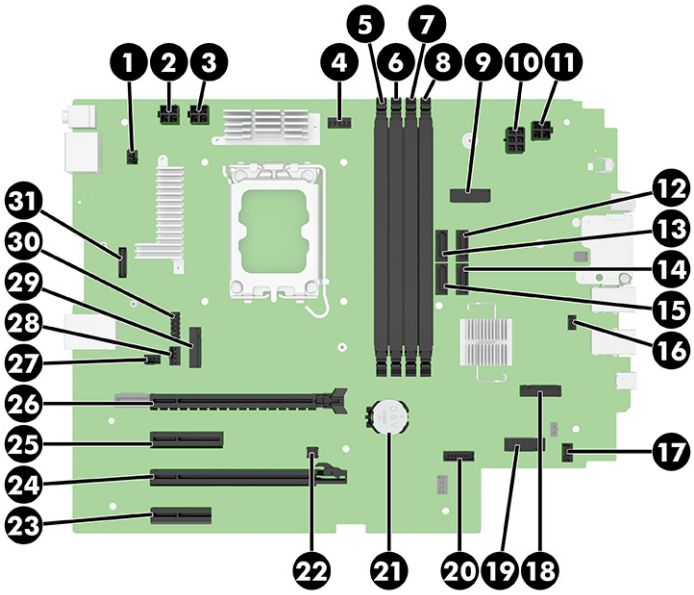

**Table 4-2 System board connections**

| Item | Component | Item | Component | Item | Component |
|---|---|---|---|---|---|
| (1) | P125, HSENSE, hood sensor | (12) | P63, SATA3, SATA drive | (23) | J20, PCI |
| (2) | P3, PWR CPU, processor power input | (13) | P61, SATA1, SATA drive | (24) | J32, X4PCIEXP |
| (3) | P4, PWR CPU, processor power input | (14) | P62, SATA2, SATA drive | (25) | J31, X1PCIEXP |
| (4) | P8, CPU fan, processor fan | (15) | P60, SATA0, primary hard drive | (26) | RISER, X16PCIEXP |
| (5) | XMM4, DDR5 memory UDIMM | (16) | P152, SD/MEDIA, card reader | (27) | P124, HLCK, hood lock |
| (6) | XMM3, DDR5 memory UDIMM | (17) | P9, CHFAN, graphics fan | (28) | P11, CHFAN2, rear chassis fan |
| (7) | XMM2, DDR5 memory UDIMM | (18) | J40, SSD3, third solid-state drive | (29) | J39, SSD1, primary solid-state drive |
| (8) | XMM1, DDR5 memory UDIMM | (19) | J46, SSD2,, second solid-state drive | (30) | P54, COMA, single serial port |
| (9) | J38, M.2 2230, WLAN | (20) | P2, PWRCMD, 12V power input | (31) | P72, OPT-IO, optional port |
| (10) | P160, SATA-PWR0, SATA power | (21) | M11, BAT, RTC battery | | |
| (11) | P1, PWR, system power | (22) | CMOS button | | |

**Table 4-3 System board connections**

| Major.minor | 2.x | 3.2 | 3.3 | 3.4 | 3.5 | 3.6 | 4.x | 5.x |
|---|---|---|---|---|---|---|---|---|
| Diagnosis | BIOS | Memory | Graphics | Power supply | CPU | CPU | Thermal | Sys bd |

### Diagnostic LED and audible codes

These provide diagnostic information through the front panel LED (blinks) and system speaker (beeps). The codes will be in a major/minor format with the major being red blinks with long/low pitch beeps, and minor being white blinks with short/high pitch beeps. For more information, see Interpreting system validation diagnostic front panel LEDs and audible codes on page 102.

# Wireless antennas and cables, internal

To remove the internal wireless antennas and cables, use these procedures. The cables route from the WLAN module to the antennas mounted on the front of the computer.

Before removing the internal wireless antennas and cables, follow these steps:

1. Prepare the computer for disassembly (see Preparation for disassembly on page 21).
2. Remove the access panel (see Access panel on page 21).

3. Remove the riser assembly (see Riser assembly (select products only) on page 24).
4. Remove the optical drive (see Optical drive on page 22).
5. Remove the front bezel (see Front bezel on page 27).
6. Rotate the drive cage to the upright position (see Drive cage on page 29).
7. Remove the rear fan (see Rear fan on page 26).
8. Remove the heat sink (see Heat sink on page 48).
9. Disconnect the antenna cables from the WLAN module (see WLAN module on page 33).

Remove the internal wireless antennas:

1. From the inside of the chassis, remove the antenna cables from the clips **(1)**.
2. From the inside-rear of the chassis, press the tab on the plastic antenna cover **(2)**, and then rotate the cover off the back of the chassis **(3)**.
3. Remove the Torx screw from the antenna **(4)**.
4. Pull the antenna cable out through the hole in the rear of the chassis **(5)**.

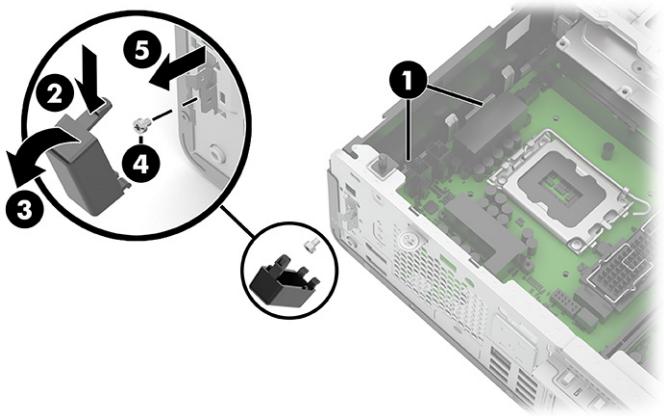


5. Remove the screw from the front antenna **(1)**, and pull the antenna off the chassis **(2)**.

6. Remove the antenna cable from the clips in the front of the chassis **(3)**, and then pull the antenna cable out through the hole in the front of the chassis **(4)**.

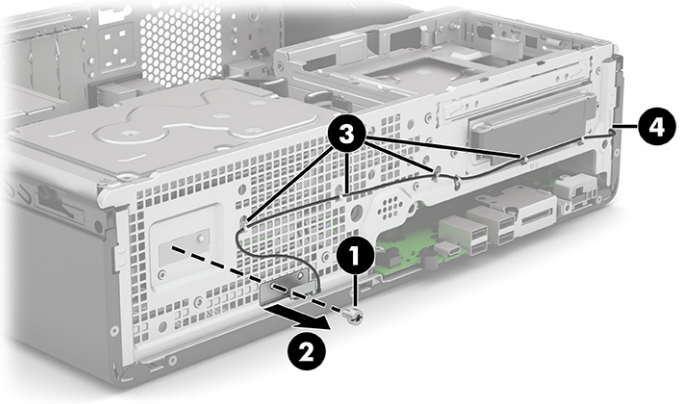


To install the internal wireless antennas and cables, reverse the removal procedures.

# Wireless antennas, external

To remove the external wireless antennas, use these procedures.

Before removing the external wireless antennas, follow these steps:

1. Prepare the computer for disassembly (see Preparation for disassembly on page 21).
2. Remove the access panel (see Access panel on page 21).
3. Remove the riser assembly (see Riser assembly (select products only) on page 24).
4. Remove the optical drive (see Optical drive on page 22).
5. Remove the front bezel (see Front bezel on page 27).
6. Rotate the drive cage to the upright position (see Drive cage on page 29).
7. Disconnect the antenna cables from the WLAN module (see WLAN module on page 33).

Remove the external wireless antennas:

1. From the inside of the chassis, remove the antenna cables from the WLAN module **(1)**.
2. From the outside-rear of the chassis, unscrew the cable from the coaxial antenna connectors **(2)**.
3. Remove the nut and washer from the antenna connectors **(3)**.

4. Pull the antenna connectors into the computer to remove them **(4)**.

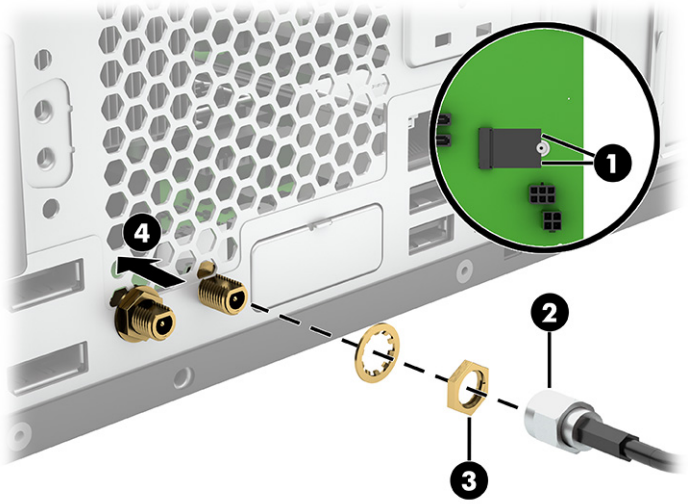


To install the external wireless antennas, reverse the removal procedures.

# 5 Troubleshooting without diagnostics

Use these sections to identify and correct minor problems.

⚠ **CAUTION:** Misuse of the computer or failure to establish a safe and comfortable work environment can result in discomfort or serious injury. See the *Safety & Comfort Guide* at http://www.hp.com/ergo for more information about choosing a workspace and creating a safe and comfortable work environment. For more information, see the *Safety & Regulatory Information* guide.

## Before you call for technical support

If you are having problems with the computer, try these solutions to isolate the exact problem before calling for technical support.

- Run the HP diagnostic tool.
- Run the hard drive self-test in Computer Setup.
- Check the power light on the front of the computer to see if it is blinking red. The blinking lights are error codes that will help you diagnose the problem.
- If you are working on a network, plug another computer with a different cable into the network connection. There might be a problem with the network plug or cable.
- If you recently added new hardware, remove the hardware and see if the computer functions properly.
- If you recently installed new software, uninstall the software and see if the computer functions properly.
- Boot the computer to the Safe Mode to see if it will boot without all of the drivers loaded. When booting the operating system, use “Last Known Configuration.”
- See the comprehensive online technical support at http://www.hp.com/support.

To assist you in resolving problems online, HP Instant Support Professional Edition provides you with self-solve diagnostics. If you need to contact HP support, use HP Instant Support Professional Edition's online chat feature. Access HP Instant Support Professional Edition at: http://www.hp.com/go/ispe.

Access the Business Support Center (BSC) at http://www.hp.com/go/bizsupport for the latest online support information, software and drivers, proactive notification, and worldwide community of peers and HP experts.

If it becomes necessary to call for technical assistance, be prepared to do the following tasks to ensure that your service call is handled properly:

- Be in front of your computer when you call.
- Before you call, write down the computer serial number and product ID number.
- Spend time troubleshooting the problem with the service technician.
- Remove any hardware that was recently added to your system.
- Remove any software that was recently installed.

- Restore the system from the Recovery Disc Set that you created or restore the system to its original factory condition in System Software Requirement Disks (SSRD).

**IMPORTANT:** Restoring the system will erase all data on the hard drive. Be sure to back up all data files before running the restore process.

**NOTE:** For sales information and warranty upgrades (Care Packs), call your local authorized service provider or dealer.

# Helpful hints

If you encounter problems with the computer or software, see this list of general suggestions before taking further action.

- Check that the computer is plugged into a working electrical outlet.
- Check that the computer is turned on and the white power light is on.
- Check the power light on the front of the computer to see if it is blinking red. The blinking lights are error codes that help you diagnose the problem.
- Press and hold any key if the system beeps. Then the keyboard should be operating correctly.
- Check all cable connections for loose connections or incorrect connections.
- Wake the computer by pressing any key on the keyboard or pressing the power button. If the system remains in suspend mode, shut down the computer by pressing and holding the power button for at least four seconds, and then press the power button again to restart the computer. If the system will not shut down, unplug the power cord, wait a few seconds, and then plug it in again. The computer will restart if it is set to turn on automatically as soon as power is restored in Computer Setup. If it does not restart, press the power button to start the computer.
- Be sure that all the needed device drivers have been installed. For example, if you are using a printer, you need a driver for that model printer.
- Remove all bootable media (such as a USB device) from the system before turning it on.
- If you have installed an operating system other than the factory-installed operating system, check to be sure that it is supported on the system.

**NOTICE:** When the computer is plugged into an AC power source, there is always voltage applied to the system board. You must disconnect the power cord from the power source before opening the computer to prevent system board or component damage.

# Solving general problems

You might be able to easily resolve the general problems described in this section. If a problem persists and you cannot resolve it yourself or if you feel uncomfortable about performing the operation, contact an authorized dealer or reseller.

**CAUTION:** When the computer is plugged into an AC power source, voltage is always applied to the system board. To reduce the risk of personal injury from electrical shock, hot surfaces, or both, be sure to disconnect the power cord from the AC outlet and allow the internal system components to cool before touching.

## Cannot access the Computer Setup (F10) Utility when booting the computer

Use this information to troubleshoot the computer.

| Cause | Solution |
|---|---|
| The Computer Setup (F10) Utility is set to Fast Boot causing the F10 access screen to display too briefly when booting the computer. | Before turning on the computer, press and hold f10. Turn on the computer and continue to hold F10 until the Computer Setup (F10) Utility is displayed.<br>– or –<br>Follow the Windows® instructions for rebooting the computer into the Computer Setup (F10) Utility. |

## Computer appears locked up and will not turn off when the power button is pressed

Use this information to troubleshoot the computer.

| Cause | Solution |
|---|---|
| Software control of the power switch is not functional. | 1. Press and hold the power button for at least 4 s until the computer turns off.<br>2. Disconnect the power cord from the electrical outlet. |

## Computer will not respond to keyboard or mouse

Use this information to troubleshoot the computer.

| Cause | Solution |
|---|---|
| Computer is in Sleep state. | To resume from Sleep state, press the power button.<br>**IMPORTANT:** When attempting to resume from Sleep state, do not hold down the power button for more than 4 s. Otherwise, the computer shuts down and you lose any unsaved data. |
| System has locked up. | Restart computer. |
| USB cables may not be seated properly. | Disconnect, and then reconnect USB cables to keyboard and mouse. |

## Computer date and time display is incorrect

Use this information to troubleshoot the computer.

| Cause | Solution |
|---|---|
| RTC (real-time clock) battery may need to be replaced. | Reset the date and time under **Control Panel**. (Computer Setup can also be used to update the RTC date and time.) If the problem persists, replace the RTC battery. See the Removal and Replacement section for instructions on installing a new battery, or contact an authorized dealer or reseller for RTC battery replacement.<br>To access Control Panel in Windows, type `control panel` in the taskbar search box, and then select Control Panel. |

## There is no sound or sound volume is too low

Use this information to troubleshoot the computer.

| Cause | Solution |
| --- | --- |
| System volume might be set low or muted. | 1. Check the front panel to see if an amber light indicates the system has been muted. Tap the touch-sensitive button to toggle the mute on and off.<br>2. Check the Computer Setup settings to be sure that the internal system speaker is not muted. This setting does not affect the external speakers.<br>3. Be sure that the external speakers are properly connected and powered on and that the speakers' volume control is set correctly.<br>4. Use the system volume control available in the operating system to be sure that the speakers are not muted or to increase the volume. |

## Cannot remove computer cover or access panel

Use this information to troubleshoot the computer.

| Cause | Solution |
| --- | --- |
| Smart Cover Lock, featured on some computers, is locked. | Unlock the Smart Cover Lock using Computer Setup.<br>In case of forgotten password, power loss, or computer malfunction, you must manually disable the Smart Cover lock. A key to unlock the Smart Cover Lock is not available from HP. Keys are typically available from a hardware store. |

## Poor performance

Use this information to troubleshoot the computer.

| Cause | Solution |
| --- | --- |
| Processor is too hot. | 1. Be sure that airflow to the computer is not blocked. Leave a 10.2 cm (4 inch) clearance on all vented sides of the computer to permit the required airflow.<br>2. Be sure that fans are connected and working properly (some fans only operate when needed).<br>3. Be sure that the processor heat sink is installed properly. |
| Hard drive is full. | Transfer data from the hard drive to create more space on the hard drive. |
| Low on memory. | Add more memory. |
| Hard drive fragmented. | Defragment hard drive. |
| Program previously accessed did not release reserved memory back to the system. | Restart the computer. |
| Virus resident on the hard drive. | Run virus protection program. |
| Too many applications running. | 1. Close unnecessary applications to free memory.<br>2. Add more memory.<br>3. Some applications run in the background and can be closed by right-clicking their corresponding icons in the task tray. |

| | |
|---|---|
| Some software applications, especially games, are stressful on the graphics subsystem. | 1. Lower the display resolution for the current application or consult the documentation that came with the application for suggestions on how to improve performance by adjusting parameters in the application.<br>2. Add more memory.<br>3. Upgrade the graphics solution. |
| Cause unknown. | Restart the computer. |

## Computer turned off automatically and the power light blinks red four times and then white two times

Use this information to troubleshoot the computer.

| Cause | Solution |
|---|---|
| Processor thermal protection activated. A fan might be blocked or not turning, or the heat sink is not properly attached to the processor. | 1. Be sure that the computer air vents are not blocked and the processor cooling fan is running.<br>2. Open the access panel, press the power button, and see if the processor fan (or other system fan) spins. If the fan does not spin, be sure that the fan cable is plugged onto the system board header.<br>3. If fan a plugged in and not spinning, replace it. |

## System does not turn on and the lights on the front of the computer are not blinking

Use this information to troubleshoot the computer.

| Cause | Solution |
| --- | --- |
| System unable to power on. | Press and hold the power button for less than 4 s. If the hard drive light turns white, then:<br>1. If the computer has a voltage selector, check that the voltage selector (located on the rear of the power supply) is set to the appropriate voltage. Proper voltage setting depends on your region.<br>2. Remove the expansion cards one at a time until the 5V_aux light on the system board turns on.<br>3. Replace the system board.<br>OR<br>Press and hold the power button for less than 4 s. If the hard drive light does not turn white, then:<br>1. Check whether the unit is plugged into a working AC outlet.<br>2. Open the access panel and check that the power button cable is properly connected to the system board.<br>3. Check that the power supply cables are properly connected to the system board.<br>4. Check to see if the 5V_aux light on the system board is turned on. If it is turned on, then replace the power button assembly.<br>5. If the 5V_aux light on the system board is off, then replace the power supply.<br>6. Replace the system board. |

# Solving power problems

These tables provide common causes and solutions for power problems.

## Power supply shuts down intermittently

Use this information to troubleshoot the computer.

| Cause | Solution |
| --- | --- |
| If the computer has a voltage selector, voltage selector switch on rear of computer chassis (some models) not switched to correct line voltage (115 V or 230 V). | Select the proper AC voltage using the selector switch. |
| Power supply will not turn on because of internal power supply fault. | Replace the power supply. |

## Computer turned off automatically, power light blinks red two times followed by a two-second pause, and the computer beeps two times (Beeps stop after fifth iteration but lights continue blinking)

Use this information to troubleshoot the computer.

| Cause | Solution |
| --- | --- |
| Processor thermal protection activated. A fan might be blocked or not turning, or the heat sink is not properly attached to the processor. | 1. Be sure that the computer air vents are not blocked and the processor cooling fan is running.<br>2. Open the access panel, press the power button, and see if the processor fan (or other system fan) spins. If the fan does not spin, be sure that the fan cable is plugged onto the system board header.<br>3. If the fan is plugged in and not spinning, replace it. |

## Power light blinks red four times followed by a two-second pause and the computer beeps four times (Beeps stop after fifth iteration but lights continue blinking)

Use this information to troubleshoot the computer.

| Cause | Solution |
| --- | --- |
| Power failure (power supply is overloaded). | 1. If the computer has a voltage selector, check that the voltage selector, located on the rear of the power supply (some models), is set to the appropriate voltage. Proper voltage setting depends on your region.<br>2. Open the access panel, and be sure that the power supply cable is seated into the connector on the system board.<br>3. Check whether a device is causing the problem by removing all attached devices (such as hard drives or optical drives and expansion cards). Turn on the system. If the system enters POST, then power off and replace one device at a time and repeat this procedure until failure occurs. Replace the device that is causing the failure. Continue adding devices one at a time to ensure all devices are functioning properly.<br>4. Replace the power supply.<br>5. Replace the system board. |

# Solving hard drive problems

These tables provide common causes and solutions for hard drive problems.

## Hard drive error occurs

Use this information to troubleshoot the computer.

| Cause | Solution |
| --- | --- |
| Hard disk has bad sectors or has failed. | 1. In Windows, type `file` in the taskbar search box, and then select **File Explorer** from the list of applications. In the left column, expand **This PC**, right-click a drive, select **Properties**, and then select the **Tools** tab. Under **Error checking**, select **Check**.<br>2. Use a utility to locate and block usage of bad sectors. If necessary, reformat the hard disk. |

## Disk drive transaction problem

Use this information to troubleshoot the computer.

| Cause | Solution |
|---|---|
| Either the directory structure is bad or there is a problem with a file. | In Windows, type `file` in the taskbar search box, and then select **File Explorer** from the list of applications. In the left column, expand **This PC**, right-click a drive, select **Properties**, and then select the **Tools** tab. Under **Error checking**, select **Check**. |

## Drive not found (identified)

Use this information to troubleshoot the computer.

| Cause | Solution |
|---|---|
| Cable could be loose. | Check cable connections. |
| The system might not have automatically recognized a newly installed device. | See reconfiguration directions in the Solving hardware installation problems on page 69 section. If the system still does not recognize the new device, check to see if the device is listed in Computer Setup. If it is listed, the probable cause is a driver problem. If it is not listed, the probable cause is a hardware problem.<br>If this is a newly installed drive, run the Computer Setup utility, and add a POST delay under **Advanced** > **Boot Options**. |
| The device is attached to a SATA port that has been hidden in Computer Setup. | Run the Computer Setup utility and be sure that **Device Available** is selected for the device's SATA port in **Advanced** > **Port Options**. |
| Drive responds slowly immediately after startup. | Run Computer Setup and increase the POST Delay in **Advanced** > **Boot Options**. |

## Nonsystem disk/NTLDR missing message

Use this information to troubleshoot the computer.

| Cause | Solution |
|---|---|
| The system is trying to start from the hard drive, but the hard drive might have been damaged. | ▪ Perform Drive Protection System (DPS) testing in system ROM. |
| System files missing or not properly installed. | 1. Insert bootable media and restart the computer.<br>2. Boot to the windows installation media, and select the recovery option. If only a restore kit is available, then select the **File Backup Program** option, and then restore the system.<br>3. Install system files for the appropriate operating system. |
| Hard drive boot has been disabled in Computer Setup. | Run the Computer Setup utility, and enable the hard drive entry in the **Advanced** > **Boot Options** list. |
| Bootable hard drive is not attached as first in a multiple hard drive configuration. | If attempting to boot from a hard drive, be sure that it is attached to the system board dark blue SATA connector. |
| Bootable hard drive is not listed first in the Boot Order. | Run the Computer Setup utility, and select **Advanced** > **Boot Options**, and be sure that the bootable hard drive is listed immediately under the **Hard Drive** entry. |

## Computer will not boot from hard drive

Use this information to troubleshoot the computer.

| Cause | Solution |
| --- | --- |
| The device is attached to a SATA port that has been hidden in Computer Setup. | 1. Check SATA cable connections.<br>2. Run the Computer Setup utility, and be sure that **Device Available** is selected for the device's SATA port in **Advanced** > **Port Options**. |
| Boot order is not correct. | Run the Computer Setup utility, and change boot sequence in **Advanced** > **Boot Options**. |
| Hard drive is damaged. | Observe whether the front panel power light is blinking red and whether any beeps are heard.<br>See the Worldwide Limited Warranty for terms and conditions. |

## Computer seems to be locked up

Use this information to troubleshoot the computer.

| Cause | Solution |
| --- | --- |
| Program in use has stopped responding to commands. | 1. Use the task manager to close programs that do not respond.<br>2. Attempt the normal Windows shut down procedure. If this fails, press the power button for four or more seconds to turn off the power. To restart the computer, press the power button again. |

# Solving audio problems

If the computer has audio features and you encounter audio problems, see the common causes and solutions listed in these tables.

## Sound cuts in and out

Use this information to troubleshoot the computer.

| Cause | Solution |
| --- | --- |
| Processor resources are being used by other open applications. | Shut down all open processor-intensive applications. |

## Sound does not come out of the speaker or headphones

Use this information to troubleshoot the computer.

| Cause | Solution |
| --- | --- |
| Software volume control is turned down or muted. | Double-click the **Speaker** icon on the taskbar, be sure that **Mute** is not selected, and use the volume slider to adjust the volume. You can perform this action with the touch-sensitive buttons on the front of the computer. |
| Audio is hidden in Computer Setup. | Enable the audio in Computer Setup: **Advanced** > **Built-in Device Options**. |
| The external speakers are not turned on. | Turn on the external speakers. |
| Headphones or devices connected to the line-out connector mute the internal speaker. | Turn on and use headphones or external speakers, if connected, or disconnect headphones or external speakers. |

| | |
|---|---|
| Computer is in the Sleep state. | Press the power button to resume from the Sleep state.<br>**IMPORTANT:** When attempting to resume from the Sleep state, do not hold down the power button for more than 4 seconds. Otherwise, the computer will shut down, and you will lose any unsaved data. |
| Internal speaker is disabled in Computer Setup. | Enable the internal speaker in Computer Setup. Select **Advanced** > **Built-in Device Options**. |
| Some applications can select which audio output device is used. | Be sure that the application has selected the correct audio device. |
| The operating system controls might be set to use a different audio device as the default output device than what is expected. | Set the operating system to use the correct audio device. |

## Computer appears to be locked up while recording audio

Use this information to troubleshoot the computer.

| Cause | Solution |
|---|---|
| The hard disk might be full. | Before recording, be sure that there is enough free space on the hard disk. You can also try recording the audio file in a compressed format. |

## Line-in jack is not functioning properly

Use this information to troubleshoot the computer.

| Cause | Solution |
|---|---|
| Jack has been reconfigured in the audio driver or application software. | In the audio driver or application software, reconfigure the jack or set the jack to its default value. |

# Solving printer problems

If you encounter printer problems, see the documentation that came with the printer and the common causes and solutions listed in these tables.

## Printer will not print

Use this information to troubleshoot the computer.

| Cause | Solution |
|---|---|
| Printer is not turned on and online. | Turn the printer on and be sure that it is online. |

| | |
|---|---|
| The correct printer drivers for the application are not installed. | 1. Install the correct printer driver for the application.<br>2. Try printing using the MS-DOS command:<br>`DIR C:\ > [printer port]`<br>where `[printer port]` is the address of the printer being used. If the printer works, reload the printer driver.<br>To run MS-DOS commands, press the Windows key + r, type `cmd` in the **Open** box, and then select **OK**. |
| If you are on a network, you might not have made the connection to the printer. | Make the proper network connections to the printer. |
| Printer might have failed. | Run printer self-test. |

## Printer will not turn on

Use this information to troubleshoot the computer.

| Cause | Solution |
|---|---|
| The cables might not be connected properly. | Reconnect all cables, and check the power cord and electrical outlet. |

## Printer prints garbled information

Use this information to troubleshoot the computer.

| Cause | Solution |
|---|---|
| The correct printer driver for the application is not installed. | Install the correct printer driver for the application. |
| The cables might not be connected properly. | Reconnect all cables. |
| Printer memory might be overloaded. | Reset the printer by turning it off for 1 min, and then turn it back on. |

## Printer will not print

Use this information to troubleshoot the computer.

| Cause | Solution |
|---|---|
| The printer might be out of paper. | Check the paper tray, and refill it if it is empty. |

# Solving keyboard and mouse problems

If you encounter keyboard or mouse problems, see the documentation that came with the equipment and the common causes and solutions listed in these tables.

## Keyboard commands and typing are not recognized by the computer

Use this information to troubleshoot the computer.

| Cause | Solution |
|---|---|
| Keyboard connector is not properly connected. | Shut down the computer, reconnect the keyboard, and then restart the computer. |
| Program in use has stopped responding to commands. | Shut down your computer using the mouse, and then restart the computer. |
| Keyboard needs repairs. | See the Worldwide Limited Warranty for terms and conditions. |
| Computer is in the Sleep state. | Press the power button to resume from the Sleep state.<br>**IMPORTANT:** When attempting to resume from the Sleep date, do not hold down the power button for more than 4 seconds. Otherwise, the computer will shut down, and you will lose any unsaved data. |

## Mouse does not respond to movement or is too slow

Use this information to troubleshoot the computer.

| Cause | Solution |
|---|---|
| Mouse connector is not properly plugged into the back of the computer. | Shut down the computer using the keyboard.<br>1. Press the ctrl and esc keys at the same time (or press the Windows logo key) to display the **Start** menu.<br>2. Use the arrow keys to scroll to and select the power icon at the top right on the menu, and then press enter.<br>3. Use the arrow keys to select **Shut Down**, and then press enter.<br>4. After the shutdown is complete, plug the mouse connector into the back of the computer (or the keyboard) and restart. |
| Program in use has stopped responding to commands. | Shut down the computer using the keyboard, and then restart the computer. |
| Mouse might need repair. | See the Worldwide Limited Warranty for terms and conditions. |
| Computer is in the Sleep state. | Press the power button to resume from the Sleep state.<br>**IMPORTANT:** When attempting to resume from the Sleep state, do not hold down the power button for more than 4 seconds. Otherwise, the computer will shut down, and you will lose any unsaved data. |
| If using a wireless mouse, you might need to resynchronize the mouse with the computer. | Follow the instructions that came with the mouse. |

# Solving hardware installation problems

You might need to reconfigure the computer when you add or remove hardware, such as an additional drive or expansion card.

If you install a plug and play device, Windows automatically recognizes the device and configures the computer. If you install a non-plug and play device, you must reconfigure the computer after completing installation of the new hardware. In Windows, use the **Add Hardware Wizard**, and follow the instructions that appear on the screen.

To open the Add Hardware Wizard, open a command prompt and type .

⚠ **WARNING!** When the computer is plugged into an AC power source, voltage is always applied to the system board. To reduce the risk of personal injury from electrical shock, hot surfaces, or both, be sure to disconnect the power cord from the AC outlet and allow the internal system components to cool before touching.

## A new device is not recognized as part of the system

Use this information to troubleshoot the computer.

| Cause | Solution |
|---|---|
| Cables of new external device are loose or power cables are unplugged. | Be sure that all cables are properly and securely connected and that pins in the cable or connector are not bent down. |
| Power switch of new external device is not turned on. | Turn off the computer, turn on the external device, and then turn on the computer to integrate the device with the computer system. |
| When the system advised you of changes to the configuration, you did not accept them. | Reboot the computer and follow the instructions for accepting the changes. |
| A plug and play board might not automatically configure when added if the default configuration conflicts with other devices. | Use Windows Device Manager to clear the automatic settings for the board, and choose a basic configuration that does not cause a resource conflict. You can also use Computer Setup to reconfigure or disable devices to resolve the resource conflict.<br>To access Device Manager in Windows, type `device manager` in the taskbar search box, and then select **Device Manager** from the list of applications. |
| USB ports on the computer are disabled in Computer Setup. | Run the Computer Setup utility and ensure that **Device available** is selected for appropriate USB ports under **Advanced** > **Port Options**. |

## Computer will not start

Use this information to troubleshoot the computer.

| Cause | Solution |
|---|---|
| Wrong memory modules were used in the upgrade, or memory modules were installed in the wrong location. | 1. Review the documentation that came with the system to determine if you are using the correct memory modules and to verify the proper installation.<br>**NOTE:** DIMM1 or XMM1 must always be installed. DIMM1 must be installed before DIMM3.<br>2. Observe the beeps and lights on the front of the computer. Beeps and blinking lights are codes for specific problems.<br>3. If you still cannot resolve the issue, contact Customer Support. |

## Power light blinks red three times and then white two times

Use this information to troubleshoot the computer.

| Cause | Solution |
| --- | --- |
| Memory is installed incorrectly or is bad. | **IMPORTANT:** To avoid damage to the DIMMs or the system board, you must unplug the computer power cord before attempting to reseat, install, or remove a DIMM module.<br>1. Reseat DIMMs. Turn on the system.<br>2. Replace DIMMs one at a time to isolate the faulty module.<br>**NOTE:** DIMM1 or XMM1 must always be installed. DIMM1 must be installed before DIMM3.<br>3. Replace third-party memory with HP memory.<br>4. Replace the system board. |

# Solving network problems

Some common causes and solutions for network problems are listed in these tables. The guidelines do not discuss the process of debugging the network cabling.

## Network driver does not detect network controller

Use this information to troubleshoot the computer.

| Cause | Solution |
| --- | --- |
| Network controller is disabled. | 1. Run Computer Setup and enable network controller.<br>2. Enable the network controller in the operating system using Device Manager.<br>To access Device Manager in Windows, type `device manager` in the taskbar search box, and then select **Device Manager** from the list of applications. |
| Incorrect network driver. | Check the network controller documentation for the correct driver or obtain the latest driver from the manufacturer's website. |

## Network status link light never blinks

Use this information to troubleshoot the computer.

**NOTE:** The network status light is supposed to blink when there is network activity.

| Cause | Solution |
| --- | --- |
| No active network is detected. | Check cabling and network equipment for proper connection. |
| Network controller is not set up properly. | Check for the device status within Windows, such as Device Manager for driver load and the Network Connections applet within Windows for link status.<br>To access Device Manager in Windows, type `device manager` in the taskbar search box, and then select **Device Manager** from the list of applications. |

| | |
|---|---|
| Network controller is disabled. | 1. Run Computer Setup and enable network controller.<br>2. Enable the network controller in the operating system using Device Manager.<br>To access Device Manager in Windows, type `device manager` in the taskbar search box, and then select **Device Manager** from the list of applications. |
| Network driver is not properly loaded. | Reinstall network drivers. |
| System cannot autosense the network. | Disable autosensing capabilities, and force the system into the correct operating mode. |

## Diagnostics reports a failure

Use this information to troubleshoot the computer.

| Cause | Solution |
|---|---|
| The cable is not securely connected. | Be sure that the cable is securely attached to the network connector and that the other end of the cable is securely attached to the correct device. |
| The cable is attached to the incorrect connector. | Be sure that the cable is attached to the correct connector. |
| There is a problem with the cable or a device at the other end of the cable. | Be sure that the cable and device at the other end are operating correctly. |
| The network controller is defective. | Contact an authorized service provider. |

## Diagnostics passes, but the computer does not communicate with the network

Use this information to troubleshoot the computer.

| Cause | Solution |
|---|---|
| Network drivers are not loaded, or driver parameters do not match current configuration. | Be sure that the network drivers are loaded and that the driver parameters match the configuration of the network controller.<br>Be sure that the correct network client and protocol is installed. |
| The network controller is not configured for this computer. | Select the **Network and Sharing Center** icon in the **Control Panel**, and configure the network controller.<br>To access Control Panel in Windows, type `control panel` in the taskbar search box, and then select **Control Panel** from the list of applications. |

## Network controller stopped working when an expansion board was added to the computer

Use this information to troubleshoot the computer.

| Cause | Solution |
|---|---|
| The network controller requires drivers. | Verify that the drivers were not accidentally deleted when the drivers for a new expansion board were installed. |

## Network controller stops working without apparent cause

Use this information to troubleshoot the computer.

| Cause | Solution |
| --- | --- |
| The cable is not securely connected. | Be sure that the cable is securely attached to the network connector, and that the other end of the cable is securely attached to the correct device. |
| The network controller is defective. | Contact an authorized service provider. |

## Cannot connect to network server when attempting remote system installation

Use this information to troubleshoot the computer.

| Cause | Solution |
| --- | --- |
| The network controller is not configured properly. | Verify network connectivity, that a DHCP Server is present, and that the Remote System Installation Server contains the network interface card (NIC) drivers for your NIC. |

## System setup utility reports unprogrammed EEPROM

Use this information to troubleshoot the computer.

| Cause | Solution |
| --- | --- |
| Unprogrammed EEPROM. | Contact an authorized service provider. |

# Solving memory problems

If you encounter memory problems, some common causes and solutions are listed in these tables.

**IMPORTANT:** Power can still be supplied to the DIMMs when the computer is turned off (depending on the Management Engine (ME) settings). To avoid damage to the DIMMs or the system board, you must unplug the computer power cord before attempting to reseat, install, or remove a memory module.

For those systems that support ECC memory, HP does not support mixing ECC and non-ECC memory. Otherwise, the computer will not boot the operating system.

**NOTE:** The memory count will be affected by configurations with the Management Engine (ME) enabled. The ME uses 8 MB of system memory in single-channel mode or 16 MB of memory in dual-channel mode to download, decompress, and execute the ME firmware for Out-of-Band (OOB), third-party data storage, and other management functions.

## System will not boot or does not function properly after installing additional memory modules

Use this information to troubleshoot the computer.

| Cause | Solution |
| --- | --- |
| A memory module is not installed in the DIMM1 or XMM1 socket. | Verify that a memory module is installed in the DIMM1 or XMM1 socket on the system board. This socket must be populated with a memory module. |
| Memory module is not the correct type or speed grade for the system, or the new memory module is not seated properly. | Replace module with the correct industry-standard device for the computer. On some models, ECC and non-ECC memory modules cannot be mixed. |

## Out of memory error

Use this information to troubleshoot the computer.

| Cause | Solution |
|---|---|
| You have run out of memory to run the application. | Check the application documentation to determine the memory requirements. |

## Memory count during POST is wrong

Use this information to troubleshoot the computer.

| Cause | Solution |
|---|---|
| The memory modules might not be installed correctly. | Check that the memory modules have been installed correctly and that proper modules are used. |
| Integrated graphics might use system memory. | No action required. |

## Insufficient memory error during operation.

Use this information to troubleshoot the computer.

| Cause | Solution |
|---|---|
| Too many Terminate and Stay Resident programs (TSRs) are installed. | Delete any TSRs that you do not need. |
| You have run out of memory for the application. | Check the memory requirements for the application or add more memory to the computer. |

## Power light blinks red five times followed by a two-second pause and the computer beeps five times (Beeps stop after fifth iteration but lights continue blinking)

Use this information to troubleshoot the computer.

| Cause | Solution |
|---|---|
| Memory is installed incorrectly or is bad. | 1. Reseat DIMMs. Turn on the system.<br>2. Replace DIMMs one at a time to isolate the faulty module.<br>3. Replace third-party memory with HP memory.<br>4. Replace the system board. |

# Solving USB flash drive problems

If you encounter USB flash drive problems, common causes and solutions are listed in these tables.

## USB flash drive is not seen as a drive letter in Windows

Use this information to troubleshoot the computer.

| Cause | Solution |
| --- | --- |
| The drive letter after the last physical drive is not available. | Change the default drive letter for the flash drive in Windows. |

## USB flash drive not found (identified)

Use this information to troubleshoot the computer.

| Cause | Solution |
| --- | --- |
| The device is attached to a USB port that has been hidden in Computer Setup. | Run the Computer Setup utility and enable USB ports in **Advanced** > **Port Options**. |
| The device was not properly seated before startup. | Be sure that the device is fully inserted into the USB port before applying power to the system |

## System will not boot from USB flash drive

Use this information to troubleshoot the computer.

| Cause | Solution |
| --- | --- |
| Boot order is not correct. | Run the Computer Setup utility, and change boot sequence in **Advanced** > **Boot Options**. |
| Removable Media Boot is disabled in the Computer Setup utility. | Run the Computer Setup utility, and enable booting to removable media in **Advanced** > **Boot Options**. Be sure that USB is enabled in **Storage** > **Boot Order**. |

## The computer boots to DOS after making a bootable flash drive

Use this information to troubleshoot the computer.

| Cause | Solution |
| --- | --- |
| Flash drive is bootable. | Install the flash drive only after the operating system boots. |
| Flash drive is defective. | Try a different flash drive. |

# Solving internet access problems

If you encounter internet access problems, consult your internet service provider (ISP), or see the common causes and solutions listed in these tables.

## Unable to connect to the internet

Use this information to troubleshoot the computer.

| Cause | Solution |
| --- | --- |
| Internet Service Provider (ISP) account is not set up properly. | Verify Internet settings, or contact your ISP for assistance. |
| Web browser is not set up properly. | Verify that the web browser is installed, and set up to work with your ISP. |
| Cable/DSL modem is not plugged in. | Plug in cable/DSL modem. You should see a power light on the front of the cable/DSL modem. |

| | |
|---|---|
| Cable/DSL service is not available or has been interrupted due to bad weather. | Try connecting to the internet at a later time or contact your ISP. (If the cable/DSL service is connected, the cable light on the front of the cable/DSL modem will be on.) |
| The CAT5 UTP cable is disconnected. | Connect the CAT5 UTP cable between the cable modem and the computer's RJ-45 connector. (If the connection is good, the PC light on the front of the cable/DSL modem will be on.) |
| IP address is not configured properly. | Contact your ISP for the correct IP address. |
| Cookies are corrupted. (A "cookie" is a small piece of information that a web server can store temporarily with the web browser. This is useful for having the browser remember some specific information that the Web server can later retrieve.) | 1. Type `control panel` in the taskbar search box, and then select **Control Panel** from the list of applications.<br>2. Select **Internet Options**.<br>3. In the **Browsing history** section, select the **Delete** button.<br>4. Select the **Cookies and website data** check box, and select the **Delete** button. |

## Cannot automatically launch internet programs

Use this information to troubleshoot the computer.

| Cause | Solution |
|---|---|
| You must log on to your ISP before some programs will start. | Log on to your ISP and launch the program. |

# Solving software problems

Most software problems occur as a result of these situations.

- The application was not installed or configured correctly.
- There is insufficient memory available to run the application.
- There is a conflict between applications.
- All the necessary device drivers might not have been installed.
- If you have installed an operating system other than the factory-installed operating system, it might not be supported on the system.

If you encounter software problems, see the applicable solutions listed in the following table.

## Computer will not start up and the HP logo does not appear

Use this information to troubleshoot the computer.

| Cause | Solution |
|---|---|
| ROM issue - POST error has occurred. | Observe the beeps and lights on the front of the computer.<br>See the Worldwide Limited Warranty for terms and conditions. |

## "Illegal Operation has Occurred" error message is displayed

Use this information to troubleshoot the computer.

| Cause | Solution |
| --- | --- |
| Software being used is not Microsoft-certified for your version of Windows. | Verify that the software is certified by Microsoft for your version of Windows (see program packaging for this information). |
| Configuration files are corrupt. | If possible, save all data, close all programs, and restart the computer. |

# 6 Computer Setup (F10) Utility

This information provides details of the Computer Setup Utility.

- Change settings from the defaults or restore the settings to default values.
- View the system configuration, including settings for processor, graphics, memory, audio, storage, communications, and input devices.
- Modify the boot order of bootable devices such as hard drives or USB flash media devices.
- Enter the Asset Tag or property identification number assigned by the company to this computer.
- Enable the power-on password prompt during system restarts (warm boots) as well as during startup.
- Establish an administrator password that controls access to the Computer Setup (F10) Utility and the settings described in this section.
- Establish minimum requirements for valid passwords, including length and required types of characters.
- Secure integrated I/O functionality, including the serial, USB, or audio, or embedded NIC, so that they cannot be used until they are unsecured.
- Enable or disable different types of boot sources.
- Configure features such as Secure Boot, power management, virtualization support, and language and keyboard type used in Setup and POST.
- Replicate the system setup by saving system configuration information about a USB device and restoring it on one or more computers.
- Enable or disable DriveLock security or securely erase a hard drive (when supported by drive).

## Using Computer Setup (F10) Utilities

You can access Computer Setup only by turning the computer on or restarting the system.

To access the Computer Setup Utilities menu, complete these steps:

1. Turn on or restart the computer.
2. Repeatedly press f10 when the power button light turns white to access the utility.

   You can also press esc to see a menu that allows you to access different options available at startup, including the Computer Setup utility.

   A choice of four headings appears in the Computer Setup Utilities menu: Main, Security, Advanced, and UEFI Drivers.

**NOTE:** If you do not press f10 at the appropriate time, you must restart the computer and again repeatedly press f10 when the power button light turns white to access the utility.

**NOTE:** Selecting UEFI Drivers restarts the computer into the third-party option ROM management application. You can access this application directly by pressing f3 during startup.

3. Use the arrow (left and right) keys to select the appropriate heading. Use the arrow (up and down) keys to select the option you want, and then press enter. To return to the Computer Setup Utilities menu, press esc.

4. To apply and save changes, select **Main** > **Save Changes and Exit**.

   - If you have made changes that you do not want applied, select **Ignore Changes and Exit**.
   - To restore settings from the Advanced and Main menus to original values, select **Apply Factory Defaults and Exit**.
   - To restore settings from the Advanced and Main menus to those previously saved by **Save Custom Defaults**, select **Apply Custom Defaults and Exit**. If no custom defaults have been saved, then factory defaults are used.

**NOTE:** You cannot modify settings in the Security menu by selecting **Apply Defaults**. You reset those values by selecting **Restore Security Settings to Factory Defaults** at the bottom of the **Security** menu.

**NOTE:** Not all settings shown in the following sections are available for all models.

**IMPORTANT:** Do not turn computer power off while the BIOS is saving the Computer Setup (F10) changes because the settings could become corrupted. It is safe to turn off the computer only after exiting the F10 Setup screen.

# Computer Setup Main

This table provides information about the Computer Setup Main menu.

**NOTE:** Support for specific Computer Setup options can vary, depending on the hardware configuration.

Table 6-1 **Computer Setup Main**

| Option | Description |
|---|---|
| **System Information** | Lists all information in following list if **Advanced System Information** is selected. Lists smaller subset if **Basic System Information** is selected.<br>• Product name<br>• Installed memory size<br>• Processor type<br>• Processor cache size (L1/L2/L3)<br>• Processor speed<br>• MicroCode revision<br>• Processor stepping<br>• Memory speed<br>• DIMM size (for each installed module)<br>• System BIOS version<br>• ME Firmware version (Intel only)<br>• Video BIOS version<br>• Reference code revision<br>• Super I/O firmware version<br>• USB Type-C® controller firmware version<br>• Serial number<br>• SKU number<br>• UUID (Universally Unique Identifier)<br>• Asset tracking number<br>• Feature byte<br>• Build ID<br>• Product family<br>• System board ID<br>• System board CT number<br>• Integrated MAC Address |
| **System Diagnostics** | If the hard drive has the HP Advanced Diagnostics installed, the application launches. If HP Advanced Diagnostics is not installed, then a basic version that is built into the BIOS provides the capability to perform the following functions:<br>• Memory Test<br>• Hard Drive Check<br>• Language |

Table 6-1 Computer Setup Main (continued)

| Option | Description |
|---|---|
| BIOS Event Log | **View BIOS Event Log** |
| | Displays a list of events, alerts, or warnings that have been logged since the log was last cleared. |
| | **Export to USB Key** |
| | Saves a file named BiosEventLog.txt containing the log entries to an inserted USB storage device. |
| | **Clear BIOS Event Log on Next Boot** |
| | When selected, the BIOS clears the event log when the user saves and exits. Default is disabled. |

Table 6-1 Computer Setup Main (continued)

| Option | Description |
|---|---|
| **Update System BIOS** | Lets you update the system BIOS from www.hp.com or another network server, from a removable USB drive, or from a file located on the hard drive.<br><br>**Check [current selection] for BIOS Updates**<br><br>The string that appears here depends on the setting in **BIOS Update Preferences**.<br><br>**Lock BIOS Version**<br><br>If this option is selected, the system is locked to the current BIOS version, and updates are not allowed.<br><br>**Native OS Firmware Update Service**<br><br>Allows the operating system to drive firmware updates (for example, Windows Update).<br><br>**BIOS Rollback Policy**<br><br>■ Unrestricted Rollback to older BIOS: Lets you roll back to any previous version of BIOS.<br><br>■ Restricted Rollback to older BIOS: If selected, **Minimum BIOS Version** becomes active, which lets you manually enter the minimum BIOS version that you can roll back to.<br><br>**Minimum BIOS Version**<br><br>Defaults to current version. Read-only unless restricted rollback is selected.<br><br>**Allow BIOS Updates Using a Network**<br><br>Lets you configure scheduled, automatic BIOS updates through the network.<br><br>**BIOS Update Preferences**<br><br>■ Check for Update on Next Reboot: Default is disabled.<br><br>■ BIOS Source: Lets you select either HP.com or a custom URL. If **Custom URL** is selected, **Edit Custom URL** becomes active. HP recommends using a custom URL only for a managed IT environment.<br><br>**Automatic BIOS Update Setting**<br><br>Allows configuration of a periodic check for updates:<br><br>**NOTE:** If Microsoft® Windows® BitLocker Drive Encryption (BDE) is enabled, it must be temporarily suspended before the BIOS is flashed.<br><br>■ Do not update<br><br>■ Checking for updates and prompt the user to accept or reject the update at that time<br><br>■ Checking for updates and install all new versions<br><br>■ Checking for updates and install only new versions marked important<br><br>**BIOS Update Frequency**<br><br>■ Daily<br><br>■ Weekly<br><br>■ Monthly (default)<br><br>**Network Configuration Settings**<br><br>Lets you configure the network connection to the server that is the host for system firmware updates.<br><br>**Update BIOS Using Local Media**<br><br>Lets you access files on either USB storage or the hard drive. The HP BIOS Update and Recovery application included in BIOS Softpaqs at www.hp.com copies the BIOS file to the correct location on the hard drive or USB device. |

**Table 6-1 Computer Setup Main (continued)**

| Option | Description |
|---|---|
| **Change date and time** | Lets you update system date and time. |
| **System IDs** | Lets you set the following values:<br>• Asset Tracking Number<br>• Ownership Tag |
| **Replicated Setup** | **Backup current settings to USB device**<br>Saves system configuration to a formatted USB flash media device.<br>**Restore current settings from USB device**<br>Restores system configuration from a USB flash media device. |
| **Save Custom Defaults** | Saves the current system configuration settings as the custom default set. |
| **Apply Custom Defaults and Exit** | Applies the custom default settings to the computer after rebooting. Does not apply to options in the **Security** menu. |
| **Apply Factory Defaults and Exit** | Restores the factory system configuration settings to the computer after rebooting. Does not apply to options in the **Security** menu. |
| **Ignore Changes and Exit** | Exits Computer Setup without applying or saving any changes. |
| **Save Changes and Exit** | Saves changes to current system configuration, exits Computer Setup, and reboots. |

# Computer Setup Security

This table provides information about the Computer Setup Security menu.

**NOTE:** Support for specific Computer Setup options can vary, depending on the hardware configuration.

**Table 6-2 Computer Setup Security**

| Option | Description |
|---|---|
| **Create BIOS Administrator Password** | Lets you set and enable a BIOS administrator password, which controls access to the following features:<br>• Setup Menu (F10)<br>• Third Party Option ROM Management (F3)<br>• Update system ROM<br>• WMI commands that change system settings<br>• BIOS Configuration Utility (BCU)<br>• Alternative power-on password<br>**NOTE:** Creating a BIOS user disables the Fast Boot option. |
| **Change BIOS Administrator Password** (This selection is active only if a BIOS administrator password is set.) | Lets you change the BIOS administrator password.<br>You must know the current password to be able to change it. |

Table 6-2 Computer Setup Security (continued)

| Option | Description |
|---|---|
| **Create POST Power-On Password** | Lets you change or delete power-on password. The power-on password prompt appears after a power cycle or reboot. If the user does not enter the correct power-on password, the unit will not boot. |
| **Change POST Power-On Password** (This selection is active only if a BIOS administrator password is set.) | Lets you change the POST power-on password.<br>You must know the current password to be able to change it. |
| **Password Policies** | Let you set the guidelines for a valid password. Options include:<br>• Password minimum length<br>• Requires at least one symbol<br>• Requires at least one number<br>• Requires at least one uppercase character<br>• Requires at least one lowercase character<br>• Allow spaces |
| **Administrator Authentication Policies** | Lets you set limitations on some boot features restricting them to admin only, including:<br>• Prompt for administrator authorization to access:<br>– Boot menu in POST<br>– System Recovery<br>– Network boot<br>– BIOS update<br>• Allow the use of administrator credentials to modify the power-on password. |

Table 6-2 Computer Setup Security (continued)

| Option | Description |
|---|---|
| Security Configuration | **TPM Embedded Security**<br>• **TPM Specification Version**<br>Displays the current TPM version.<br>• **TPM Device**<br>Lets you set the Trusted Platform Module as available or hidden. Default is available.<br>• **TPM State**<br>Select to enable the TPM. Default is disabled.<br>• **Clear TPM**<br>Select to reset the TPM to an unowned state. After the TPM is cleared, it is also turned off. To temporarily suspend TPM operations, turn the TPM off instead of clearing it. Default is no.<br>**IMPORTANT:** Clearing the TPM resets it to factory defaults and turns it off. You will lose all created keys and data protected by those keys.<br>• **TPM Activation Policy**<br>○ F1 to boot<br>○ Allow user to reject (default)<br>○ No prompts<br>**BIOS SureStart**<br>• Verify Boot Block on every boot: Select to enable HP SureStart. Default is disabled.<br>• Network Controller Configuration Restore: Select to restore the network controller parameters to the factory state saved in the HP Sure Start Private nonvolatile (flash) memory. This setting is available only on computers with built-in NIC.<br>**NOTE:** This process can take up to 30 seconds. You need to restore this only when the Network Controller Configuration mismatch warning is set.<br>• Dynamic Runtime Scanning of Boot Block: Verifies the integrity of the BIOS boot block region several times each hour while the computer is running. Default is enabled.<br>• Sure Start BIOS Settings Protection: When enabled, HP Sure Start locks all critical BIOS settings and provides enhanced protection for these settings using nonvolatile (flash) memory. Default is off.<br>**NOTE:** An administrator password must be set to activate this setting.<br>• Sure Start Secure Boot Keys Protection: Saves a backup copy of Secure Boot Keys so that they can be recovered if someone attempts to alter them in an unauthorized manner.<br>• Enhanced HP Firmware Runtime Intrusion Prevention and Detection: Enables monitoring of HP system firmware executing out of main memory while the operating system is running. Any anomalies detected in HP system firmware that is active while the operating system is running will result in a Sure Start security event being generated.<br>• Sure Start Security Event Policy. Controls HP Sure Start behavior upon identifying a critical security event (any modification to HP firmware) while the operating system is running.<br>– Log Event Only: HP Sure Start will log all critical security events in the HP Sure Start audio log within the HP Sure Start nonvolatile (flash) memory.<br>– Log Event and notify user: In addition to logging all critical security events, HP Sure Start will notify the user within the operating system that a critical event has occurred.<br>– Log Event and power off system: In addition to logging all critical security events, HP Sure Start turns of the computer upon detecting a HP Sure Start Security Event. Because of the potential for data loss, HP recommends this setting only in situations where security integrity of the system is a higher priority than the risk of potential data loss.<br>• Sure Start Security Event Boot Notification: Lets you enable a warning message on the startup screen if there is a Sure Start event (BIOS recovery, Memory intrusion, etc.) |

Table 6-2 Computer Setup Security (continued)

| Option | Description |
|---|---|
| **Utilities** | **Hard Drive Utilities**<br>• **Save/Restore GPT of System Hard Drive**<br>Enabling this feature saves the GUID Partition Table (GPT) of the system hard drive. If the GPT is subsequently changed, the user is prompted to choose whether to restore GPT. Default is disabled.<br>• **Boot Sector (GPT) Recovery Policy**<br>Allows selection of the default action when a GPT event occurs.<br>• **DriveLock/Automatic DriveLock**<br>Allows you to assign or modify a master or user password for hard drives. When this feature is enabled, the user is prompted to provide one of the DriveLock passwords during POST. If neither is successfully entered, the hard drive remains inaccessible until one of the passwords is successfully provided during a subsequent cold-boot sequence.<br>**NOTE:** This selection appears only when at least one drive that supports the DriveLock feature is attached to the system.<br>**IMPORTANT:** Be aware that these settings take place immediately. It is not necessary to save.<br>**IMPORTANT:** Be sure to document the DriveLock password. Losing a DriveLock password will render a drive permanently locked.<br>**NOTE:** Disable DriveLock on NVMe drives before using applications for hardware-based encryption. After you select a drive, the following options are available:<br>- Set DriveLock Master Password. Sets the drive's master password but does not enable DriveLock.<br>- Enable DriveLock. Sets the drive's user password and enables DriveLock.<br>• **Secure Erase**<br>Lets you select a hard drive to completely erase.<br>After you erase a hard drive with a program that uses Secure Erase firmware commands, no file recovery program, partition recovery program, or other data recovery method can extract data from the drive.<br>• **Allow OPAL Hard Drive SID Authentication**<br>BIOS supports drive encryption using the DriveLock feature by creating the storage device's ownership key. If BIOS creates the key, any 3rd party applications (including other encryption software) are not allowed to perform certain drive operations such as establishing their own key using SID. Encryption software applications may or may not be limited by SID authentication lockout depending on how they are designed. Default is disabled. |
| **Absolute Persistence Module Current State** | Shows the current state of the Absolute Persistence module.<br>Yes: Disabled<br>No: Available |
| **System Management Command** | Allows authorized personnel to reset security settings during a service event. Default is enabled. |
| **Restore Security Settings to Factory Default** | This action resets security devices, clears BIOS passwords (not including DriveLock), and restores settings in the **Security menu** to factory defaults. |

# Computer Setup Advanced

This table provides information about the Computer Setup Advanced menu.

**NOTE:** Support for specific Computer Setup options can vary, depending on the hardware configuration.

**Table 6-3 Computer Setup Advanced (for advanced users)**

| Option | Heading |
|---|---|
| **Display Language** | Lets you select the language of the menus in F10 Setup and the keyboard layout. |
| **Scheduled Power-On** | This feature wakes the system when it is off at a specified date and time. |

Table 6-3 Computer Setup Advanced (for advanced users) (continued)

| Option | Heading |
|---|---|
| **Boot Options** | Select the devices that the computer can boot from, as well as other options, including:<br>• Startup Delay (sec): Enabling this feature adds a user-specified delay to the POST process. One purpose for the delay is to provide additional time to activate hotkeys such as esc for the Startup Menu or f10 for Computer Setup.<br>• Fast Boot: Default is enabled.<br>• CD-ROM Boot (select products only): Default is enabled.<br>• USB Storage Boot: Default is enabled.<br>• Network (PXE) Boot: Default is enabled.<br>• After Power Loss: Default is Power Off.<br>▪ Power off: Causes the computer to remain off when power is restored.<br>▪ Power on: Causes the computer to turn on automatically as soon as power is restored.<br>▪ Previous state: Causes the computer to turn on automatically as soon as power is restored, if it was on when power was lost.<br>NOTE: If the system is configured to Power On from Keyboard Ports (see Power Management Options), then this setting is forced to Power On.<br>• Prompt on Memory Size Change: Default is enabled.<br>• Prompt on Fixed Storage Change: Default is disabled.<br>• After Boot Device Not Found: Default is Stop.<br>▪ Stop: Show boot failed message only if no boot devices are found.<br>▪ UEFI Diagnostics: Start the HP UEFI Diagnostics Tool to check if device issues found.<br>▪ Restart: Restart the computer to if boot device is not found.<br>• Audio Alerts During Boot: Default is enabled. When disabled, most audible beeps from errors, warnings, and password prompts during boot up are suppressed.<br>• Numlock on at boot: Default is disabled.<br>• UEFI Boot Order: Specify the order in which UEFI boot sources are checked for a bootable operating system image. The default boot order is:<br>1. USB<br>2. SATA DVD<br>3. SATA hard drives<br>4. M.2 devices<br>5. Network boot<br>NOTE: Use the UP and DOWN arrows to highlight an item. Press enter to select. Use the UP and DOWN arrows to move a selected item. Press f5 to enable or disable. Press esc to exit.<br>**Shortcut to Temporarily Override Boot Order**<br>To boot **one time** from a device other than the default device specified in Boot Order, restart the computer and press esc (to access the Startup menu) and then f9 (Boot Menu), or only f9 (skipping the Startup menu) when the power button light turns white. After POST is completed, a list of bootable devices is displayed. Use the arrow keys to select the preferred bootable device and press enter. The computer then boots from the selected non-default device for this one time. |

Table 6-3 Computer Setup Advanced (for advanced users) (continued)

| Option | Heading |
| --- | --- |
| HP Sure Recover | **HP Sure Recover**<br><br>If enabled and HP Sure Recover is launched, the system firmware honors local and remote requests to reinstall the operating system. If it is disabled, all requests to reinstall the operating system are ignored. Default is enabled.<br><br>**Recover from Network**<br><br>Allows system firmware to retrieve the recovery agent from the network. If disabled, system firmware retrieves the recovery agent from a local drive. Default is enabled.<br><br>**Recover after Boot Failure**<br><br>If enabled and no bootable UEFI operating system is found, system firmware launches HP Sure Recover. Default is disabled.<br><br>**Recover before Boot Failure Recovery**<br><br>If enabled and HP Sure Recover is launched because of a boot failure, the user is notified of the boot failure and asked to choose whether to start or cancel HP Sure Recover. This setting is displayed only if **Recover after Boot Failure** is selected.<br><br>**Recovery Agent**<br><br>Displays recovery agent information. This information is displayed only if **Recover from Network** is selected.<br><br>**Recovery Image**<br><br>Displays recovery image information. This information is displayed only if **Recover from Network** is selected.<br><br>**OS Recovery Image Version**.<br><br>Display the version of the recovery image stored in the embedded secure storage device. This information is displayed only if an embedded secure storage device is installed.<br><br>**OS Recovery Driver Version**<br><br>Display the version of the recovery driver stored in the embedded secure storage device. This information is displayed only if an embedded secure storage device is installed. |

Table 6-3 Computer Setup Advanced (for advanced users) (continued)

| Option | Heading |
|---|---|
| System Options | **Configure Storage Controller for VMD**<br><br>Enables VMD RAID Controller. Default is enabled.<br><br>**Turbo-boost** (Intel products only)<br><br>Allows Intel Turbo Boost Technology to improve performance when operation conditions allow. Default is enabled.<br><br>**Hyperthreading** (Intel products only)<br><br>Lets you control processor capability. Default is enabled.<br><br>**Virtualization Technology (VTx)** (Intel only)<br><br>Controls the virtualization features of the processor. Changing this setting requires turning the computer off and then back on. Default is disabled.<br><br>**Virtualization Technology for Directed I/O (VTd)** (Intel only)<br><br>Controls virtualization DMA remapping features of the chipset. Changing this setting requires turning the computer off and then back on. Default is disabled.<br><br>Allows for secure logon using the Windows Hello feature.<br><br>**DMA Protection**<br><br>Enables DMA redirection using IOMMU for enhanced security. Default is enabled.<br><br>**NOTE:** Requires that VTd is enabled.<br><br>**Pre-boot DMA protection**<br><br>Secures memory access through DMA to allowed regions prior to operating system startup.<br><br>**Early PCIe Delay**<br><br>Enables a configurable delay to add-in PCIe cards prior to PCIe training. Default is disabled.<br><br>**Accelerate USB Enumeration**<br><br>Lets you reduce the time of USB enumeration on specific USB devices. Default is disabled.<br><br>**NVMe Write Endurance Masking**<br><br>Causes the computer to not report errors during boot if NVMe write endurance is exceeded. Default is disabled.<br><br>**Reset Factory Defaults on Battery Loss**<br><br>Lets you return settings to default values in the case of battery power loss. Default is Apply Default Settings.<br><br>**Power Button Override** (disable/4 sec/15 sec/30 sec)<br><br>Lets you enable and select the number of seconds you have to hold down the power button for it to force the system to turn off. Default is 4 sec.<br><br>**USB Type-C Connector System Software Interface (UCSI)** (select products only)<br><br>Allows UCSI to be exposed to the operating system (ACPI table).<br><br>**HP Application Driver**<br><br>Provides ACPI structure to enable HP common software application framework. The driver is provided in the latest HP support software that you can download from the web.<br><br>**NOTE:** Device Manager shows an alert if this setting is enabled without the HP application driver installed.<br><br>**Performance Control** (High Performance Mode/Performance Mode/Quite Mode)<br><br>Lets you set a preference for higher performance or quieter acoustic noise via the BIOS F10 Setup Menu. There are three modes available: |

Table 6-3 Computer Setup Advanced (for advanced users) (continued)

| Option | Heading |
| --- | --- |
| Built-In Device Options | **Embedded LAN Controller** (select products only)<br><br>Select to show the device in the operating system. Default is enabled.<br><br>**Wake On LAN**<br><br>Lets you either disable the Wake On LAN feature or configure where the computer boots, including the network or hard drive. Default is boot to network.<br><br>**Dust Filter** (select products only)<br><br>Default is disabled.<br><br>**Dust Filter Reminder (Days)** (select products only)<br><br>Default is 60.<br><br>**Integrated Video** (models with discrete graphics)<br><br>Disables the integrated video device. When not using integrated video, disabling the integrated video will free some system memory.<br><br>**VGA Boot Device** (models with discrete graphics)<br><br>Selects the graphics controller to use as the primary VGA device during boot-up when there are multiple graphics devices. The firmware can use only one graphics device when booting up.<br><br>**Video Memory Size**<br><br>Lets you manage graphics memory allocation. The value you choose is allocated permanently to graphics and is unavailable to the operating system.<br><br>**Audio Device**<br><br>Select to show audio devices in the operating system, including integrated microphone, internal speakers, and headphone out. When selected, operating system visibility of each audio device is controlled independently. When this setting is cleared, all audio devices are hidden from the operating system. Individual audio device settings are also disabled. Default is enabled.<br><br>**Microphone**<br><br>Clear to disable the integrated microphone. This does not affect devices plugged into audio jacks. The disable and lock setting prevents other audio ports from being remapped to the microphone function in the operating system. Default is enabled.<br><br>**Internal Speakers** (does not affect external speakers)<br><br>Clear to disable the chassis speaker or speakers. This function is applicable to normal audio playback in the operating system and does not affect the error or warning beeps during POST. Default is enabled.<br><br>**LAN/WLAN auto switching**<br><br>Select to enable auto switching between a wired and wireless connection. Default is disabled.<br><br>**Wake on WLAN**<br><br>Select to enable wake on WLAN. Default is disabled.<br><br>**M.2 USB/Bluetooth**<br><br>Select to enable the M.2 controller. Default is enabled.<br><br>**Increase Idle Fan Speed(%)**<br><br>Controls the minimum fan speed during periods that the fan would normally be off under the control of the desktop thermal sensor. |

Table 6-3 Computer Setup Advanced (for advanced users) (continued)

| Option | Heading |
|---|---|
| **Port Options** | **USB ports** (varies by model)<br><br>Lets you enable specific USB ports. Default is enabled.<br><br>**USB Legacy Port Charging**<br><br>Lets you enable USB charging port capability when the computer is in hibernate or shutdown mode. Default is enabled.<br><br>**USB Type-C Downstream Charging**<br><br>Lets you enable USB charging port capability when the computer is in hibernate on or off. Default is enabled.<br><br>**Media Card Reader/SD_RDR USB**<br><br>Enables the media card reader connector (labeled SD_RDR) on a desktop. Default is enabled.<br><br>**SATA** (varies by model)<br><br>Lets you hide SATA ports from the operating system. Default is enabled (not hidden).<br><br>**Serial Port** (varies by model)<br><br>Lets you enable specific serial ports. Default is enabled.<br><br>**Serial Port Voltage** (Retail Point-of-Sale models only; ports vary by model)<br><br>Lets you configure powered serial port voltage selection on RPOS units that include this feature. Default is 0 Volts.<br><br>• 0 Volts<br>• 5 Volts<br>• 12 Volts<br><br>**Restrict USB Devices**<br><br>Specify the following categories of USB devices to enable:<br><br>• Allow all USB devices (default)<br>• Allow only keyboard and mouse<br>• Allow all but storage devices and hubs.<br><br>When some devices are restricted, the system will disable USB ports that do not meet the allowed criteria. This feature is usually combined with similar policies within the operating system because USB devices can be moved to different ports. The ports disabled by the BIOS remain disabled until the system is restarted. |

Table 6-3 Computer Setup Advanced (for advanced users) (continued)

| Option | Heading |
|---|---|
| Power Management Options | **Runtime Power Management**<br><br>Allows certain operating systems to reduce processor voltage and frequency when the current software load does not require the full capabilities of the processor. Default is enabled.<br><br>**Extended Idle Power States**<br><br>Allows certain operating systems to decrease the processors power consumption when the processor is idle. Default is enabled.<br><br>**S4/S5 Maximum Power Savings**<br><br>Enabling this feature reduces the power of the system as much as possible in the S4 or S5 state. Power is removed from the wake up circuitry, the expansion slots, and any management features while in S4 or S5. Default is disabled.<br><br>**SATA Power Management**<br><br>Enables or disables SATA bus, device power management, or both. Default is enabled.<br><br>**PCI Express Power Management**<br><br>Enabling this option permits the PCI Express links to use Active Power State Management (ASPM) to enter lower power states while not in use. Default is enabled.<br><br>**Power On from Keyboard Ports**<br><br>When enabled, this feature allows a key press to turn on the system when it is off (S5 state). If using a USB keyboard, you must plug it into one of the rear ports labeled with the keyboard icon. Default is disabled.<br><br>**Unique Sleep State Blink Rates**<br><br>This feature is designed to provide a visual indication of what Sleep state the system is in. Each Sleep state has a unique blink pattern. Default is disabled.<br><br>**NOTE:** A normal shutdown goes to the S4 state for Windows 8 or later.<br><br>S0 (On) = solid white light.<br><br>S3 (Stand By) = 3 blinks at 1 Hz (50% duty cycle) followed by a pause of 2 seconds (white light), repeated cycles of 3 blinks and a pause.<br><br>S4 (Hibernation) = 4 blinks at 1 Hz (50% duty cycle) followed by a pause of 2 seconds (white light), repeated cycles of 4 blinks and a pause.<br><br>S5 (Soft Off) = Light is off. |

Table 6-3 Computer Setup Advanced (for advanced users) (continued)

| Option | Heading |
|---|---|
| **Remote Management Options** (Intel only) | **Intel Management Engine(ME)**<br><br>Lets you enable the Intel Management Engine. Default is enabled.<br><br>**Intel Active Management Technology (AMT)**<br><br>Allows you to discover, repair, and protect networked computing devices. Default is disabled.<br><br>**USB Key Provisioning Support**<br><br>Enables AMT provisioning using a USB storage device. Default is disabled.<br><br>**USB Redirection Support**<br><br>USB redirection allows USB devices plugged into a client computer to be transparently redirected to the guest operating system. Default is enabled.<br><br>**Unconfigure AMT on next boot**. Resets AMT configuration options on next boot. Default is Do Not Apply.<br><br>**SOL Terminal Emulation Mode**<br><br>SOL (serial-over-LAN) terminal emulation mode is only activated during remote AMT (Active Management Technology) redirection operations. The emulation options allow administrators to select which mode works best with their console. Default is ANSI.<br><br>**Show Unconfigure ME Confirmation Prompt**<br><br>Requires user confirmation when unconfiguring the Intel Management Engine. Default is enabled.<br><br>**Verbose Boot Messages**<br><br>Verbose boot shows additional logging information during startup, which is mainly for debugging if something goes wrong during bootup. Default is enabled.<br><br>**Watchdog Timer**<br><br>Allows you to set amount of time for a operating system and BIOS watchdog alert to be sent if the timers are not deactivated. BIOS watchdog is deactivated by BIOS and would indicate that a halt occurred during execution if the alert is sent to the management console. An operating system alert is deactivated by the operating system image and would indicate that a hang occurred during its initialization. Default is enabled.<br><br>• OS Watchdog Timer (min.). Default is 5 min.<br><br>• BIOS Watchdog Timer (min.). Default is 5 min.<br><br>**CIRA Timeout (min.)**<br><br>CIRA is Customer Initiated Remote Assistance, an Intel service to help users employing Active Management Technology (AMT). Default is 1. |

Table 6-3 Computer Setup Advanced (for advanced users) (continued)

| Option | Heading |
| --- | --- |
| Slot Settings | **PCI Express (x16/x4/x1) slots**<br><br>Lets you enable or disable PCIe slots. Default is enabled.<br><br>**M.2 SSDs**<br><br>Lets you enable or disable M.2 solid-state drive slots. Default is enabled.<br><br>**M.2 WLAN/BT**<br><br>Lets you enable or disable WLAN/BT slots. Default is enabled.<br><br>**Option ROM Download**<br><br>Lets you enable whether option ROM can run on the device installed in this slot.<br><br>**Limit PCIe Speed** (workstation models only)<br><br>Lets you restrict the maximum speed of the PCI Express devices to previous generations. The following settings are possible:<br><br>- Auto<br><br>- Gen 1 (2.5 Gbps)<br><br>- Gen 2 (5 Gbps)<br><br>- Gen 3 (8 Gbps)<br><br>- Gen 4 (16 Gbps) |
| Remote HP PC Hardware Diagnostics | **Settings**<br><br>Sets the configuration for Remote HP PC Hardware Diagnostics, including the URLs used for download and upload and scheduled execution frequency.<br><br>**Execute Remote HP PC Hardware Diagnostics**<br><br>Select to immediately execute Remote HP PC Hardware Diagnostics based on the how settings are configured. Any unsaved BIOS settings will be lost. |

# 7 POST error messages

This section lists the error codes, error messages, and the various indicator light and audible sequences that you may encounter during Power-On Self-Test (POST) or computer restart, the probable source of the problem, and steps you can take to resolve the error condition.

POST Message Disabled suppresses most system messages during POST, such as memory count and non-error text messages. If a POST error occurs, the screen will display the error message. To manually switch to the POST Messages Enabled mode during POST, press any key (except f10, f11, or f12). The default mode is POST Message Disabled.

The POST mode selection determines the speed at which the computer loads the operating system and the extent to which it is tested.

Quick Boot is a fast startup process that does not run all of the system level tests, such as the memory test. Full Boot runs all of the ROM-based system tests and takes longer to complete.

You can enable Full Boot to run every 1 to 30 days on a regularly scheduled basis. To establish the schedule, reconfigure the computer to the Full Boot Every x Days mode, using Computer Setup.

**NOTE:** For more information about Computer Setup, see Computer Setup (F10) Utility on page 78.

## POST numeric codes and text messages

This section identifies those POST errors that have numeric codes associated with them. The section also includes some text messages that you might encounter during POST.

**NOTE:** The computer beeps once after a POST text message is displayed on the screen.

**Table 7-1 POST numeric codes and text messages**

| Control panel message | Description | Recommended action |
|---|---|---|
| 002-Option ROM Checksum Error | System ROM or expansion board option ROM checksum. | 1. Verify the correct ROM.<br>2. Flash the ROM if needed.<br>3. If an expansion board was recently added, remove it to see if the problem remains.<br>4. Clear CMOS.<br>5. If the message disappears, there might be a problem with the expansion card.<br>6. Replace the system board. |
| 003-System Board Failure | DMA or timers. | 1. Clear CMOS.<br>2. Replace the system board. |

**Table 7-1 POST numeric codes and text messages (continued)**

| Control panel message | Description | Recommended action |
|---|---|---|
| 005-Real-Time Clock Power Loss | Invalid time or date in configuration memory. RTC (real-time clock) battery may need to be replaced. | Reset the date and time under Control Panel (Computer Setup can also be used). If the problem persists, replace the RTC battery. See the Removal and Replacement section for instructions on installing a new battery. |
| 008–Microcode Patch Error | Processor is not supported by the BIOS. | 1. Upgrade BIOS to proper version.<br>2. Change the processor. |
| 009–PMM Allocation Error during MEBx Download | Memory error during POST execution of the Management Engine (ME) BIOS Extensions option ROM. | 1. Reboot the computer.<br>2. Unplug the power cord, reseat the memory modules, and reboot the computer.<br>3. If the memory configuration was recently changed, unplug the power cord, restore the original memory configuration, and reboot the computer.<br>4. If the error persists, replace the system board. |
| 00A-Product Information Not Valid | The product information programmed into the system board is missing or invalid. | Use Computer Setup to update this information. |
| 00B-MEBx Module did not checksum correctly | Memory error during POST execution of the Management Engine (ME) BIOS Extensions option ROM. | 1. Reboot the computer.<br>2. Unplug the power cord, reseat the memory modules, and reboot the computer.<br>3. If the memory configuration was recently changed, unplug the power cord, restore the original memory configuration, and reboot the computer.<br>4. If the error persists, replace the system board. |
| 00C-PMM Deallocation Error during MEBx Cleanup | Memory error during POST execution of the Management Engine (ME) BIOS Extensions option ROM. | 1. Reboot the computer.<br>2. Unplug the power cord, reseat the memory modules, and reboot the computer.<br>3. If the memory configuration was recently changed, unplug the power cord, restore the original memory configuration, and reboot the computer.<br>4. If the error persists, replace the system board. |

**Table 7-1 POST numeric codes and text messages (continued)**

| Control panel message | Description | Recommended action |
|---|---|---|
| 00D-Setup Error during MEBx Execution | MEBx selection or exit resulted in a setup failure. | 1. Reboot the computer.<br>2. Unplug the power cord, reseat the memory modules, and reboot the computer.<br>3. If the memory configuration was recently changed, unplug the power cord, restore the original memory configuration, and reboot the computer.<br>4. If the error persists, replace the system board. |
| 00E-Inventory Error during MEBx Execution | BIOS information passed to the MEBx resulted in a failure. | 1. Reboot the computer.<br>2. If the error persists, update to the latest BIOS version.<br>3. If the error still persists, replace the system board. |
| 00F-Interface Error during MEBx Execution | MEBx operation experienced a hardware error during communication with the ME. | 1. Reboot the computer.<br>2. If the error persists, update to the latest BIOS version.<br>3. If the error still persists, replace the system board. |
| 100-Front Audio Not Connected | Front audio cable has been detached or unseated from system board. | Reconnect or replace front audio cable. |
| 2E1-MemorySize Error | Memory amount has changed since the last boot (memory added or removed). | The system memory size is different from the last startup. The most common reason is the removal of memory from the system board. Press the f1 key to save the memory changes. |
| 2E2-Memory Error | Memory module configuration failed during boot up. | 1. Be sure that memory modules are correctly installed.<br>2. Verify proper memory module type.<br>3. Remove and replace the identified faulty memory modules.<br>4. If the error persists after replacing memory modules, replace the system board. |
| 2E3-Incompatible Memory Module in Memory Socket(s) X, X, ... | A memory module in memory socket identified in the error message is missing critical SPD information, or is incompatible with the chipset. | 1. Verify proper memory module type.<br>2. Try another memory socket.<br>3. Replace with a supported module. |
| 2E4-DIMM Configuration Warning | Populated DIMM Configuration is not optimized. | Rearrange the DIMMs so that each channel has the same amount of memory. |

**Table 7-1 POST numeric codes and text messages (continued)**

| Control panel message | Description | Recommended action |
|---|---|---|
| 2E5-ECC Memory Module Detected on Unsupported Platform | Recently added memory modules support ECC memory error correction. | 1. If additional memory was recently added, remove it to see if the problem remains.<br>2. Check product documentation for memory support information. |
| 2E6–Memory Not Configured Correctly for Proper MEBx Execution | DIMM1 is not installed. | Make sure there is a memory module in the DIMM1 socket and that it is properly seated. |
| 300–Configuration Change Warning | A change in storage configuration has been detected (see Boot Options menu in BIOS Setup to enable this feature). Either the installed hardware has changed, storage or firmware mode may have been changed, or a storage device may have failed to respond. | If no changes have been made prior to this warning, check that the drives are connected properly to power cables and system board. User Diagnostics (f2 during boot-up) may help identify any problem with specific devices. |
| 301-Hard Disk 1: SMART Hard Drive Detects Imminent Failure | Hard drive is about to fail. (Some hard drives have a hard drive firmware patch that will fix an erroneous error message.) | 1. Determine if hard drive is giving correct error message. Run the Drive Protection System test under using F2 Diagnostics when booting the computer.<br>2. Apply hard drive firmware patch if applicable. (Available at http://www.hp.com/support.)<br>3. Back up contents and replace hard drive. |
| 302-Hard Disk 2: SMART Hard Drive Detects Imminent Failure | Hard drive is about to fail. (Some hard drives have a hard drive firmware patch that will fix an erroneous error message.) | 1. Determine if hard drive is giving correct error message. Run the Drive Protection System test under using F2 Diagnostics when booting the computer.<br>2. Apply hard drive firmware patch if applicable. (Available at http://www.hp.com/support.)<br>3. Back up contents and replace hard drive. |
| 309 – 30C: Hard Disk 3–6: SMART Hard Drive Detects Imminent Failure | Hard drive is about to fail. (Some hard drives have a hard drive firmware patch that will fix an erroneous error message.) | 1. Determine if hard drive is giving correct error message. Run the Drive Protection System test under using F2 Diagnostics when booting the computer.<br>2. Apply hard drive firmware patch if applicable. (Available at http://www.hp.com/support.)<br>3. Back up contents and replace hard drive. |
| 3F0–Boot Device Not Found | Boot device not found. | Insert boot device or load operating system. |

Table 7-1 POST numeric codes and text messages (continued)

| Control panel message | Description | Recommended action |
|---|---|---|
| 3F1–Hard Disk 1 Error | Hard disk 1 error. | 1. Check and/or replace cables.<br>2. Clear CMOS.<br>3. Replace the hard disk drive. |
| 3F2–Hard Disk 2 Error | Hard disk 2 error. | 1. Check and/or replace cables.<br>2. Clear CMOS.<br>3. Replace the hard disk drive. |
| 400-Serial Port A Address Conflict Detected | Both external and internal serial ports are assigned to the same resources. | 1. Remove any serial port expansion cards.<br>2. Clear CMOS.<br>3. Reconfigure card resources and/or run Computer Setup or Windows utilities. |
| 401-Serial Port B Address Conflict Detected | Both external and internal serial ports are assigned to the same resources. | 1. Remove any serial port expansion cards.<br>2. Clear CMOS.<br>3. Reconfigure card resources and/or run Computer Setup or Windows utilities. |
| 402-Serial Port C Address Conflict Detected | Both external and internal serial ports are assigned to the same resources. | 1. Remove any serial port expansion cards.<br>2. Clear CMOS.<br>3. Reconfigure card resources and/or run Computer Setup or Windows utilities. |
| 403-Serial Port D Address Conflict Detected | Both external and internal serial ports are assigned to the same resources. | 1. Remove any serial port expansion cards.<br>2. Clear CMOS.<br>3. Reconfigure card resources and/or run Computer Setup or Windows utilities. |
| 419-Out of Memory Space for Option ROMs | Recently added PCI expansion card contains an option ROM too large to download during POST. | If a PCI expansion card was recently added, remove it to see if the problem remains. |
| 41A-Front USB1/USB2 Not Connected | Front USB cable has been detached or unseated from system board. | Reconnect or replace front USB cable. |
| 41B-Device in PCI Express Slot Failed To Initialize | There is an incompatibility or problem with a PCIe device and the system or PCIe link could not be configured to a valid bus width or speed. | Try rebooting the system. If the error reoccurs, the device may not work with this system |
| 43A-USB Type-C I2C Not Connected | Cable is required between I2C on card and USB-C on the system board. | Install cable between I2C on card and USB-C on the system board. |
| 43B-More Than One USB type-C Cards Are Installed | More than one USB type-C card is installed. | Remove USB type-C card so only one is installed. |

**Table 7-1 POST numeric codes and text messages (continued)**

| Control panel message | Description | Recommended action |
|---|---|---|
| 500–BIOS Recovery | A system BIOS recovery has occurred. | Not applicable. |
| 70x-Wireless Mode Not Supported | The system has detected a wireless module installed in the system that is not supported and has been disabled. | Replace with a supported module. |
| 800-Keyboard Error | Keyboard failure. | 1. Reconnect keyboard with computer turned off.<br>2. Check connector for bent or missing pins.<br>3. Be sure that none of the keys are depressed.<br>4. Replace keyboard. |
| 801-Keyboard or System Unit Error | Keyboard failure. | 1. Reconnect the keyboard with computer turned off.<br>2. Be sure that none of the keys are depressed.<br>3. Replace the keyboard.<br>4. Replace the system board. |
| 900-CPU Fan Not Detected | CPU fan is not connected or may have malfunctioned. | 1. Reseat fan.<br>2. Reseat fan cable.<br>3. Replace fan. |
| 901-Chassis, Rear Chassis, Front Chassis, or PCIe blower Fan not Detected | Fan is not connected or might have malfunctioned. | 1. Reseat fan.<br>2. Reseat fan cable.<br>3. Replace fan. |
| 904-SATA Cabling Error | One or more SATA devices are improperly attached. For optimal performance, the SATA 0 and SATA 1 ports should be used for hard drives before other ports. | Ensure SATA connectors are used in ascending order. For one device, use SATA 0. For two devices, use SATA 0 and SATA 1. For three devices, use SATA 0, SATA 1, and SATA 2. |
| 90B-Fan Failure | The system has detected that a cooling fan is not operating correctly. | 1. Reseat fan.<br>2. Reseat fan.cable.<br>3. Replace fan. |
| 90D-System Temperature | Thermal shutdown occurred. The system BIOS has detected your machine was previously shut down to avoid overheating. Overheating may occur if the cooling vents are blocked or the operating temperature exceeds the system specifications. The machine should return to normal operation once the situation is resolved. | Make sure system has proper airflow. |
| 90E-Power Supply Fan Not detected | Power supply fan is not connected or may have malfunctioned. | 1. Reseat power supply fan.<br>2. Reseat fan cable.<br>3. Replace power supply fan. |

Table 7-1 POST numeric codes and text messages (continued)

| Control panel message | Description | Recommended action |
|---|---|---|
| 910–Filter Warning | Airflow filter is dirty. | Replace the airflow filter. |
| 911–Graphics Module Fan Not Detected | Graphics card fan is not connected or might have malfunctioned. | 1. Reseat graphics card fan.<br>2. Reseat fan cable.<br>3. Replace graphics card fan. |
| 912–Incorrect CPU cooler installed for this configuration | The processor cooler/heat sink does not match processor power requirement. | Replace the cooler/heat sink to match the processor power requirement. |

# Interpreting system validation diagnostic front panel LEDs and audible codes

This section identifies the front panel light codes as well as the audible codes that can occur before or during POST that might not have an error code or text message associated with them.

⚠ **CAUTION:** When the computer is plugged into an AC power source, voltage is always applied to the system board. To reduce the risk of personal injury from electrical shock and/or hot surfaces, be sure to disconnect the power cord from the AC outlet and allow the internal system components to cool before touching.

During the system validation phase that occurs at system startup, the BIOS validates the functionality of the following subsystems and conditions:

- AC adapter
- System board power
- Processor failure
- BIOS corruption
- Memory failure
- Graphics failure
- System board failure
- BIOS authentication failure

If an error is detected, specific patterns of long and short blinks, accompanied by long and short beeps (where applicable) are used to identify the error. These patterns will make up a two part code:

- Major – the category of the error
- Minor – the specific error within the category

**NOTE:** Single beep/blink codes are not used.

Table 7-2 Beep pattern error identification

| Number of long beeps/blinks | Error category |
|---|---|
| 1 | Not used |

Table 7-2 Beep pattern error identification (continued)

| Number of long beeps/blinks | Error category |
|---|---|
| 2 | BIOS |
| 3 | Hardware |
| 4 | Thermal |
| 5 | System board |

Patterns of blink/beep codes are determined by using the following parameters:

- 1 second pause occurs after the last major blink.
- 2 second pause occurs after the last minor blink.
- Beep error code sequences occur for the first 5 iterations of the pattern and then stop.
- Blink error code sequences continue until the computer is unplugged or the power button is pressed.

NOTE: Not all diagnostic lights and audible codes are available on all models.

The red LED blinks to represent the major error category (long blinks). The white LED blinks to represent the minor error category (short blinks). For example, '3.5' indicates 3 long red blinks and 5 short white blinks to communicate the processor is not detected.

Table 7-3 Interpreting POST diagnostic front panel lights and audible codes

| Category | Major/minor code | Description |
|---|---|---|
| BIOS | 2.2 | The main area (DXE) of BIOS has become corrupted and there is no recovery binary image available. |
| | 2.3 | The embedded controller policy requires the user to enter a key sequence. |
| | 2.4 | The embedded controller is checking or recovering the boot block. |
| Hardware | 3.2 | The embedded controller has timed out waiting for BIOS to return from memory initialization. |
| | 3.3 | The embedded controller has timed out waiting for BIOS to return from graphics initialization. |
| | 3.4 | The system board displays a power failure (crowbar).* |
| | 3.5 | The processor is not detected.* |
| | 3.6 | The processor does not support an enabled feature. |
| | 3.7 | The access panel/top cover has been opened since last boot. |
| Thermal | 4.2 | A processor over temperature condition has been detected.* |
| | 4.3 | An ambient temperature over temperature condition has been detected. |
| | 4.4 | An MXM over temperature condition has been detected. |

**Table 7-3 Interpreting POST diagnostic front panel lights and audible codes (continued)**

| Category | Major/minor code | Description |
|---|---|---|
| System board | 5.2 | The embedded controller cannot find valid firmware. |
| | 5.3 | The embedded controller has timed out waiting for the BIOS. |
| | 5.4 | The embedded controller has timed out waiting for BIOS to return from system board initialization. |
| | 5.5 | The embedded controller rebooted the system after a possible lockup condition had been detected through the use of a System Health Timer, Automated System Recovery Timer, or other mechanism. |

* Indicates hardware triggered event; all other events are controlled by the BIOS.

# 8 Password security and resetting CMOS

This computer supports two security password features that you can establish through the Computer Setup Utilities menu: administrator password and power-on password.

When you establish only an administrator password, any user can access all the information on the computer except Computer Setup. When you establish only a power-on password, the power-on password is required to access Computer Setup and any other information on the computer. When you establish both passwords, only the administrator password will give you access to Computer Setup.

When both passwords are set, you can use the administrator password in place of the power-on password as an override to log in to the computer. This feature is useful for a network administrator.

**IMPORTANT:** Back up the BIOS settings or save them as custom defaults in case you need them later. You can back up in Computer Setup or with the BiosConfigUtility tool available from www.hp.com. See Computer Setup (F10) Utility on page 78 for information about backing up the BIOS settings.

## Changing a setup or power-on password

Use this procedure to change a password.

To change the power-on or setup password, complete the following steps:

1. Turn on or restart the computer.

   To change the setup password, go to step 2.

   To change the power-on password, go to step 3.

2. To change the setup password, as soon as the computer turns on:

   - Press esc while the “Press the ESC key for Startup Menu” message is displayed.

   - Press f10 to enter Computer Setup.

3. When the key icon appears, type your current password, a slash (/) or alternate delimiter character, your new password, another slash (/) or alternate delimiter character, and your new password again as shown:

   *current password/new password/new password*

   **NOTE:** Type the new password carefully because the characters do not appear on the screen.

4. Press enter.

The new password will take effect the next time the computer is restarted.

## Deleting a setup or power-on password

Use this procedure to delete a password.

To delete the power-on or setup password, complete the following steps:

1. Turn on or restart the computer.

   To delete the Setup password, go to step 2.

   To delete the Power-on password, go to step 3.

2. To delete the Setup password, as soon as the computer turns on:

   - Press esc while the “Press the ESC key for Startup Menu” message is displayed.

   - Press f10 to enter Computer Setup.

3. When the key icon appears, type your current password, a slash (/) or alternate delimiter character, your new password, another slash (/) or alternate delimiter character, and your new password again as shown:

   *current password/*

4. Press enter.

# 9 Using HP PC Hardware Diagnostics

You can use the HP PC Hardware Diagnostics utility to determine whether your computer hardware is running properly. The three versions are HP PC Hardware Diagnostics Windows, HP PC Hardware Diagnostics UEFI (Unified Extensible Firmware Interface), and (for select products only) Remote HP PC Hardware Diagnostics UEFI, a firmware feature.

## Using HP PC Hardware Diagnostics Windows (select products only)

HP PC Hardware Diagnostics Windows is a Windows-based utility that allows you to run diagnostic tests to determine whether the computer hardware is functioning properly. The tool runs within the Windows operating system to diagnose hardware failures.

If HP PC Hardware Diagnostics Windows is not installed on your computer, first you must download and install it. To download HP PC Hardware Diagnostics Windows, see Downloading HP PC Hardware Diagnostics Windows on page 108.

### Using an HP PC Hardware Diagnostics Windows hardware failure ID code

When HP PC Hardware Diagnostics Windows detects a failure that requires hardware replacement, a 24-digit failure ID code is generated for select component tests. For interactive tests, such as keyboard, mouse, or audio and video palette, you must perform troubleshooting steps before you can receive a failure ID.

- You have several options after you receive a failure ID:
  - Select **Next** to open the Event Automation Service (EAS) page, where you can log the case.

    – or –

  - Scan the QR code with your mobile device, which takes you to the EAS page, where you can log the case.

    – or –

  - Select the box next to the 24-digit failure ID to copy your failure code and send it to support.

### Accessing HP PC Hardware Diagnostics Windows

After HP PC Hardware Diagnostics Windows is installed, you can access it from HP Support Assistant or the Start menu.

#### Accessing HP PC Hardware Diagnostics Windows from HP Help and Support (select products only)

After HP PC Hardware Diagnostics Windows is installed, follow these steps to access it from HP Help and Support.

1. Select the **Start** button, and then select **HP Help and Support**.
2. Select **HP PC Hardware Diagnostics Windows**.
3. When the tool opens, select the type of diagnostic test that you want to run, and then follow the on-screen instructions.

NOTE: To stop a diagnostic test, select **Cancel**.

### Accessing HP PC Hardware Diagnostics Windows from HP Support Assistant

After HP PC Hardware Diagnostics Windows is installed, follow these steps to access it from HP Support Assistant.

1. Select the **Search** icon (select products only) from the taskbar, type `support`, and then select **HP Support Assistant**.

   – or –

   Select the question mark icon (select products only) in the taskbar.

2. Select **Troubleshooting and fixes** (select products only) or **Fixes & Diagnostics**.
3. Select **Diagnostics**, and then select **HP PC Hardware Diagnostics Windows**.
4. When the tool opens, select the type of diagnostic test that you want to run, and then follow the on-screen instructions.

NOTE: To stop a diagnostic test, select **Cancel**.

### Accessing HP PC Hardware Diagnostics Windows from the Start menu (select products only)

After HP PC Hardware Diagnostics Windows is installed, follow these steps to access it from the Start menu.

1. Select the **Start** button, and then select **All apps** (select products only).
2. Select **HP PC Hardware Diagnostics Windows**.
3. When the tool opens, select the type of diagnostic test that you want to run, and then follow the on-screen instructions.

NOTE: To stop a diagnostic test, select **Cancel**.

## Downloading HP PC Hardware Diagnostics Windows

The HP PC Hardware Diagnostics Windows downloading instructions are provided in English only. You must use a Windows computer to download this tool because only .exe files are provided.

### Downloading the latest HP PC Hardware Diagnostics Windows version from HP

To download HP PC Hardware Diagnostics Windows from HP, follow these steps.

1. Go to http://www.hp.com/go/techcenter/pcdiags. The HP PC Diagnostics home page is displayed.
2. Select **Download HP Diagnostics Windows**, and then select the specific Windows diagnostics version to download to your computer or a USB flash drive.

The tool downloads to the selected location.

### Downloading the HP PC Hardware Diagnostics Windows from the Microsoft Store

You can download the HP PC Hardware Diagnostics Windows from the Microsoft Store.

1. Select the Microsoft Store app on your desktop.

   – or –

   Select the **Search** icon (select products only) in the taskbar, and then type `Microsoft Store`.

2. Enter `HP PC Hardware Diagnostics Windows` in the **Microsoft Store** search box.

3. Follow the on-screen directions.

The tool downloads to the selected location.

### Downloading HP Hardware Diagnostics Windows by product name or number (select products only)

You can download HP PC Hardware Diagnostics Windows by product name or number.

**NOTE:** For some products, you might have to download the software to a USB flash drive by using the product name or number.

1. Go to http://www.hp.com/support.

2. Select **Software and Drivers**, select your type of product, and then enter the product name or number in the search box that is displayed.

3. In the **Diagnostics** section, select **Download**, and then follow the on-screen instructions to select the specific Windows diagnostics version to be downloaded to your computer or USB flash drive.

The tool downloads to the selected location.

### Installing HP PC Hardware Diagnostics Windows

To install HP PC Hardware Diagnostics Windows, navigate to the folder on your computer or the USB flash drive where the .exe file downloaded, double-click the .exe file, and then follow the on-screen instructions.

## Using HP PC Hardware Diagnostics UEFI

HP PC Hardware Diagnostics UEFI (Unified Extensible Firmware Interface) allows you to run diagnostic tests to determine whether the computer hardware is functioning properly. The tool runs outside the operating system so that it can isolate hardware failures from issues that are caused by the operating system or other software components.

**NOTE:** For some products, you must use a Windows computer and a USB flash drive to download and create the HP UEFI support environment because only .exe files are provided. For more information, see Downloading HP PC Hardware Diagnostics UEFI to a USB flash drive on page 110.

If your PC does not start in Windows, you can use HP PC Hardware Diagnostics UEFI to diagnose hardware issues.

### Using an HP PC Hardware Diagnostics UEFI hardware failure ID code

When HP PC Hardware Diagnostics UEFI detects a failure that requires hardware replacement, a 24-digit failure ID code is generated.

For assistance in solving the problem:

- Select **Contact HP**, accept the HP privacy disclaimer, and then use a mobile device to scan the failure ID code that appears on the next screen. The HP Customer Support - Service Center page appears with your failure ID and product number automatically filled in. Follow the on-screen instructions.

  – or –

  Contact support, and provide the failure ID code.

**NOTE:** To start diagnostics on a convertible computer, your computer must be in notebook mode, and you must use the attached keyboard.

**NOTE:** If you need to stop a diagnostic test, press esc.

## Starting HP PC Hardware Diagnostics UEFI

To start HP PC Hardware Diagnostics UEFI, follow this procedure.

1. Turn on or restart the computer, and quickly press esc.
2. Press f2.

   The BIOS searches three places for the diagnostic tools, in the following order:

   a. Connected USB flash drive

   **NOTE:** To download the HP PC Hardware Diagnostics UEFI tool to a USB flash drive, see Downloading the latest HP PC Hardware Diagnostics UEFI version on page 110.

   b. Hard drive

   c. BIOS
3. When the diagnostic tool opens, select a language, select the type of diagnostic test you want to run, and then follow the on-screen instructions.

## Downloading HP PC Hardware Diagnostics UEFI to a USB flash drive

Downloading HP PC Hardware Diagnostics UEFI to a USB flash drive can be useful in some situations.

- HP PC Hardware Diagnostics UEFI is not included in the preinstallation image.
- HP PC Hardware Diagnostics UEFI is not included in the HP Tool partition.
- The hard drive is damaged.

**NOTE:** The HP PC Hardware Diagnostics UEFI downloading instructions are provided in English only, and you must use a Windows computer to download and create the HP UEFI support environment because only .exe files are provided.

### Downloading the latest HP PC Hardware Diagnostics UEFI version

To download the latest HP PC Hardware Diagnostics UEFI version to a USB flash drive, follow this procedure.

1. Go to http://www.hp.com/go/techcenter/pcdiags. The HP PC Diagnostics home page is displayed.
2. Select **Download HP Diagnostics UEFI**, and then select **Run**.

### Downloading HP PC Hardware Diagnostics UEFI by product name or number (select products only)

You can download HP PC Hardware Diagnostics UEFI by product name or number (select products only) to a USB flash drive.

**NOTE:** For some products, you might have to download the software to a USB flash drive by using the product name or number.

1. Go to http://www.hp.com/support.
2. Enter the product name or number, select your computer, and then select your operating system.
3. In the **Diagnostics** section, follow the on-screen instructions to select and download the specific UEFI Diagnostics version for your computer.

## Using Remote HP PC Hardware Diagnostics UEFI settings (select products only)

Remote HP PC Hardware Diagnostics UEFI is a firmware (BIOS) feature that downloads HP PC Hardware Diagnostics UEFI to your computer. It can then execute the diagnostics on your computer, and it might upload results to a preconfigured server.

For more information about Remote HP PC Hardware Diagnostics UEFI, go to http://www.hp.com/go/techcenter/pcdiags, and then select **Find out more**.

### Downloading Remote HP PC Hardware Diagnostics UEFI

HP Remote PC Hardware Diagnostics UEFI is also available as a SoftPaq that you can download to a server.

### Downloading the latest Remote HP PC Hardware Diagnostics UEFI version

You can download the latest HP PC Hardware Diagnostics UEFI version to a USB flash drive.

1. Go to http://www.hp.com/go/techcenter/pcdiags. The HP PC Diagnostics home page is displayed.
2. Select **Download Remote Diagnostics**, and then select **Run**.

### Downloading Remote HP PC Hardware Diagnostics UEFI by product name or number

You can download HP Remote PC Hardware Diagnostics UEFI by product name or number.

**NOTE:** For some products, you might have to download the software by using the product name or number.

1. Go to http://www.hp.com/support.
2. Select **Software and Drivers**, select your type of product, enter the product name or number in the search box that is displayed, select your computer, and then select your operating system.
3. In the **Diagnostics** section, follow the on-screen instructions to select and download the **Remote UEFI** version for the product.

### Customizing Remote HP PC Hardware Diagnostics UEFI settings

Using the Remote HP PC Hardware Diagnostics setting in Computer Setup (BIOS), you can perform several customizations.

- Set a schedule for running diagnostics unattended. You can also start diagnostics immediately in interactive mode by selecting **Execute Remote HP PC Hardware Diagnostics**.
- Set the location for downloading the diagnostic tools. This feature provides access to the tools from the HP website or from a server that has been preconfigured for use. Your computer does not require the traditional local storage (such as a hard drive or USB flash drive) to run remote diagnostics.
- Set a location for storing the test results. You can also set the user name and password that you use for uploads.
- Display status information about the diagnostics run previously.

To customize Remote HP PC Hardware Diagnostics UEFI settings, follow these steps:

1. Turn on or restart the computer, and when the HP logo appears, press f10 to enter Computer Setup.
2. Select **Advanced**, and then select **Settings**.
3. Make your customization selections.
4. Select **Main**, and then **Save Changes and Exit** to save your settings.

Your changes take effect when the computer restarts.

# 10 Backing up, restoring, and recovering

You can use Windows tools or HP software to back up your information, create a restore point, reset your computer, create recovery media, or restore your computer to its factory state. Performing these standard procedures can return your computer to a working state faster.

**IMPORTANT:** If you will be performing recovery procedures on a tablet, the tablet battery must be at least 70% charged before you start the recovery process.

**IMPORTANT:** For a tablet with a detachable keyboard, connect the tablet to the keyboard base before beginning any recovery process.

## Backing up information and creating recovery media

These methods of creating recovery media and backups are available on select products only.

### Using Windows tools for backing up

HP recommends that you back up your information immediately after initial setup. You can do this task either using Windows Backup locally with an external USB drive or using online tools.

**IMPORTANT:** Windows is the only option that allows you to back up your personal information. Schedule regular backups to avoid information loss.

**NOTE:** If computer storage is 32 GB or less, Microsoft® System Restore is disabled by default.

### Using the HP Cloud Recovery Download Tool to create recovery media (select products only)

You can use the HP Cloud Recovery Download Tool to create HP Recovery media on a bootable USB flash drive.

- Go to http://www.hp.com, search for HP Cloud Recovery, and then select the result that matches the type of computer that you have.

**NOTE:** If you cannot create recovery media yourself, contact support to obtain recovery discs. Go to http://www.hp.com/support, select your country or region, and then follow the on-screen instructions.

**IMPORTANT:** HP recommends that you follow the Restoring and recovery methods on page 114 to restore your computer before you obtain and use the HP recovery discs. Using a recent backup can return your machine to a working state sooner than using the HP recovery discs. After the system is restored, reinstalling all the operating system software released since your initial purchase can be a lengthy process.

## Restoring and recovering your system

You have several tools available to recover your system both within and outside of Windows if the desktop cannot load.

HP recommends that you attempt to restore your system using the Restoring and recovery methods on page 114.

## Creating a system restore

System Restore is available in Windows. The System Restore software can automatically or manually create restore points, or snapshots, of the system files and settings on the computer at a particular point.

When you use System Restore, it returns your computer to its state at the time you made the restore point. Your personal files and documents should not be affected.

## Restoring and recovery methods

After you run the first method, test to see whether the issue still exists before you proceed to the next method, which might now be unnecessary.

1. Run a Microsoft System Restore.
2. Run Reset this PC.

   **NOTE:** The options **Remove everything** and then **Fully clean the drive** can take several hours to complete and leave no information on your computer. It is the safest way to reset your computer before you recycle it.

3. Recover using HP Recovery media. For more information, see Recovering using HP Recovery media on page 114.

For more information about the first two methods, see the Get Help app:

Select the **Start** button, select **All apps** (select products only), select the **Get Help** app, and then enter the task you want to perform.

**NOTE:** You must be connected to the internet to access the Get Help app.

## Recovering using HP Recovery media

You can use HP Recovery media to recover the original operating system and software programs that were installed at the factory. On select products, it can be created on a bootable USB flash drive using the HP Cloud Recovery Download Tool.

For details, see Using the HP Cloud Recovery Download Tool to create recovery media (select products only) on page 113.

**NOTE:** If you cannot create recovery media yourself, contact support to obtain recovery discs. Go to http://www.hp.com/support, select your country or region, and then follow the on-screen instructions.

To recover your system:

- Insert the HP Recovery media, and then restart the computer.

**NOTE:** HP recommends that you follow the Restoring and recovery methods on page 114 to restore your computer before you obtain and use the HP recovery discs. Using a recent backup can return your machine to a working state sooner than using the HP recovery discs. After the system is restored, reinstalling all the operating system software released since your initial purchase can be a lengthy process.

## Changing the computer boot order

If your computer does not restart using the HP Recovery media, you can change the computer boot order, the order of devices listed in BIOS for startup information. You can select an optical drive or a USB flash drive, depending on the location of your HP Recovery media.

**IMPORTANT:** For a tablet with a detachable keyboard, connect the tablet to the keyboard base before beginning these steps.

To change the boot order:

1. Insert the HP Recovery media.
2. Access the system **Startup** menu.
   - For computers or tablets with keyboards attached, turn on or restart the computer or tablet, quickly press esc, and then press f9 for boot options.
   - For tablets without keyboards, turn on or restart the tablet, quickly press and hold the volume up button, and then select **f9**.

     – or –

     Turn on or restart the tablet, quickly press and hold the volume down button, and then select **f9**.
3. Select the optical drive or USB flash drive from which you want to boot, and then follow the on-screen instructions.

## Using HP Sure Recover (select products only)

Select computer models are configured with HP Sure Recover, a PC operating system (OS) recovery solution built into the hardware and software. HP Sure Recover can fully restore the HP OS image without installed recovery software.

Using HP Sure Recover, an administrator or user can restore the system and install:

- Latest version of the operating system
- Platform-specific device drivers
- Software applications, in the case of a custom image

To access the latest documentation for HP Sure Recover, go to http://www.hp.com/support. Follow the on-screen instructions to find your product and locate your documentation.

# 11 Statement of memory volatility

For general information regarding nonvolatile memory in HP business computers, and to restore nonvolatile memory that can contain personal data after the system has been turned off and the hard drive has been removed, use these instructions.

HP business computer products that use Intel®-based or AMD®-based system boards contain volatile DDR memory. The amount of nonvolatile memory present in the system depends upon the system configuration. Intel-based and AMD-based system boards contain nonvolatile memory subcomponents as originally shipped from HP, with the following assumptions:

- No subsequent modifications were made to the system.
- No applications, features, or functionality were added to or installed on the system.

Following system shutdown and removal of all power sources from an HP business computer system, personal data can remain on volatile system memory (DIMMs) for a finite period of time and also remains in nonvolatile memory. Use the following steps to remove personal data from the computer, including the nonvolatile memory found in Intel-based and AMD-based system boards.

**NOTE:** If your tablet has a keyboard base, connect to the keyboard base before beginning steps in this chapter.

## Current BIOS steps

Use these instructions to restore nonvolatile memory.

1. Follow these steps to restore the nonvolatile memory that can contain personal data. Restoring or reprogramming nonvolatile memory that does not store personal data is neither necessary nor recommended.

   a. Turn on or restart the computer, and then quickly press esc.

   **NOTE:** If the system has a BIOS administrator password, enter the password at the prompt.

   b. Select **Main**, select **Apply Factory Defaults and Exit**, and then select **Yes** to load defaults. The computer restarts.

   c. During the restart, press esc while the "Press the ESC key for Startup Menu" message is displayed at the bottom of the screen.

   **NOTE:** If the system has a BIOS administrator password, enter the password at the prompt.

   d. Select the **Security** menu, select **Restore Security Settings to Factory Defaults**, and then select **Yes** to restore security level defaults. The computer reboots.

   e. During the reboot, press esc while the "Press the ESC key for Startup Menu" message is displayed at the bottom of the screen.

   **NOTE:** If the system has a BIOS administrator password, enter the password at the prompt.

f. If an asset or ownership tag is set, select the **Security** menu and scroll down to the **Utilities** menu. Select **System IDs**, and then select **Asset Tracking Number**. Clear the tag, and then make the selection to return to the prior menu.

g. If a DriveLock password is set, select the **Security** menu, and scroll down to **Hard Drive Utilities** under the **Utilities** menu. Select **Hard Drive Utilities**, select **DriveLock**, and then clear the check box for **DriveLock password on restart**. Select **OK** to proceed.

h. Select the **Main** menu, and then select **Reset BIOS Security to factory default**. Select **Yes** at the warning message. The computer reboots.

i. During the reboot, press esc while the "Press the ESC key for Startup Menu" message is displayed at the bottom of the screen.

**NOTE:** If the system has a BIOS administrator password, enter the password at the prompt.

j. Select the **Main** menu, select **Apply Factory Defaults and Exit**, select **Yes** to save changes and exit, and then select **Shutdown**.

k. Reboot the system. If the system has a Trusted Platform Module (TPM), fingerprint reader, or both, one or two prompts will appear—one to clear the TPM and the other to Reset Fingerprint Sensor. Press or tap f1 to accept or f2 to reject.

l. Remove all power and system batteries for at least 24 hours.

2. Complete one of the following:

- Remove and retain the storage drive.

  – or –

- Clear the drive contents by using a third-party utility designed to erase data from an SSD.

  – or –

- Clear the contents of the drive by using the following BIOS Setup Secure Erase command option steps:

**NOTE:** If you clear data using Secure Erase, you cannot recover it.

a. Turn on or restart the computer, and then quickly press esc.

b. Select the **Security** menu and scroll down to the esc menu.

c. Select **Hard Drive Utilities**.

d. Under **Utilities**, select **Secure Erase**, select the hard drive storing the data you want to clear, and then follow the on-screen instructions to continue.

   – or –

   Clear the contents of the drive using the following Disk Sanitizer commands steps:

   i. Turn on or restart the computer, and then quickly press esc.

   ii. Select the **Security** menu and scroll down to the **Utilities** menu.

   iii. Select **Hard Drive Utilities**.

iv. Under **Utilities**, select **Disk Sanitizer**, select the hard drive with the data that you want to clear, and then follow the on-screen instructions to continue.

**NOTE:** The amount of time it takes for Disk Sanitizer to run can take several hours. Plug the computer into an AC outlet before starting.

# Nonvolatile memory usage

Use this table to troubleshooting nonvolatile memory usage.

**Table 11-1 Troubleshooting steps for nonvolatile memory usage**

| Nonvolatile memory type | Amount (Size) | Does this memory store customer data? | Does this memory retain data when power is removed? | What is the purpose of this memory? | How is data entered into this memory? | How is this memory write-protected? |
|---|---|---|---|---|---|---|
| HP Sure Start flash (select models only) | 32 MB | No | Yes | Provides protected backup of critical System BIOS code, EC firmware, and critical computer configuration data for select platforms that support HP Sure Start.<br><br>For more information, see Using HP Sure Start (select products only) on page 121. | Data cannot be written to this device via the host processor. The content is managed solely by the HP Sure Start Embedded Controller. | This memory is protected by the HP Sure Start Embedded Controller. |
| Real Time Clock (RTC) battery backed-up CMOS configuration memory | 256 bytes | No | Yes | Stores system date and time and noncritical data. | RTC battery backed-up CMOS is programmed using Computer Setup (BIOS), or by changing the Windows date & time. | This memory is not write-protected. |
| Controller (NIC) EEPROM | 64 KB (not customer accessible) | No | Yes | Stores NIC configuration and NIC firmware. | NIC EEPROM is programmed using a utility from the NIC vendor that can be run from DOS. | A utility must be used to write data to this memory and is available from the NIC vendor. Writing data to this ROM in an inappropriate manner will render the NIC non-functional. |

**Table 11-1 Troubleshooting steps for nonvolatile memory usage (continued)**

| Nonvolatile memory type | Amount (Size) | Does this memory store customer data? | Does this memory retain data when power is removed? | What is the purpose of this memory? | How is data entered into this memory? | How is this memory write-protected? |
|---|---|---|---|---|---|---|
| DIMM Serial Presence Detect (SPD) configuration data | 256 bytes per memory module, 128 bytes programmable (not customer accessible) | No | Yes | Stores memory module information. | DIMM SPD is programmed by the memory vendor. | Data cannot be written to this memory when the module is installed in a computer.<br>The specific write-protection method varies by memory vendor. |
| System BIOS | 32 MB | Yes | Yes | Stores system BIOS code and computer configuration data. | System BIOS code is programmed at the factory. Code is updated when the system BIOS is updated. Configuration data and settings are entered using the Computer Setup (BIOS) or a custom utility. | **NOTE:** Writing data to this ROM in an inappropriate manner can render the computer non-functional.<br><br>A utility must be used for writing data to this memory and is available on the HP website; go to http://www.hp.com/support. Select **Find your product**, and then follow the on-screen instructions. |
| Intel Management Engine Firmware (present only in select Elite or Z models. For more information, go to http://www.hp.com/support. Select **Identify your product for manuals and specific product information**, and then follow the on-screen instructions.) | 1.5 MB or 7 MB | Yes | Yes | Stores Management Engine Code, Settings, Provisioning Data and iAMT third-party data store. | Management Engine Code is programmed at the factory. Code is updated via Intel secure firmware update utility. Unique Provisioning Data can be entered at the factory or by an administrator using the Management Engine (MEBx) setup utility. The third-party data store contents can be populated by a remote management console or local applications that have been registered by an administrator to have access to the space. | The Intel chipset is configured to enforce hardware protection to block all direct read-write access to this area. An Intel utility must be used for updating the firmware. Only firmware updates digitally signed by Intel can be applied using this utility. |
| Bluetooth flash (select products only) | 2 megabits | No | Yes | Stores Bluetooth configuration and firmware. | Bluetooth flash is programmed at the factory. Tools for writing data to this memory are not publicly available but can be obtained from the silicon vendor. | A utility must be used for writing data to this memory and is made available through newer versions of the driver whenever the flash requires an upgrade. |

Table 11-1 Troubleshooting steps for nonvolatile memory usage (continued)

| Nonvolatile memory type | Amount (Size) | Does this memory store customer data? | Does this memory retain data when power is removed? | What is the purpose of this memory? | How is data entered into this memory? | How is this memory write-protected? |
|---|---|---|---|---|---|---|
| 802.11 WLAN EEPROM | 4 kilobits to 8 kilobits | No | Yes | Stores configuration and calibration data. | 802.11 WLAN EEPROM is programmed at the factory. Tools for writing data to this memory are not made public. | A utility must be used for writing data to this memory and is typically not made available to the public unless a firmware upgrade is necessary to address a unique issue. |

# Questions and answers

Use this section to answer your questions about nonvolatile memory.

1. **How can the BIOS settings be restored (returned to factory settings)?**

IMPORTANT: The restore defaults feature does not securely erase any information on your hard drive. See question and answer 6 for steps to securely erase information.

The restore defaults feature does not reset the Custom Secure Boot keys. See question and answer 7 for information about resetting the keys.

a. Turn on or restart the computer, and then quickly press esc.

b. Select **Main**, and then select **Apply Factory Defaults and Exit**.

c. Follow the on-screen instructions.

d. Select **Main**, select **Save Changes and Exit**, and then follow the on-screen instructions.

2. **What is a UEFI BIOS, and how is it different from a legacy BIOS?**

The Unified Extensible Firmware Interface (UEFI) BIOS is an industry-standard software interface between the platform firmware and an operating system (OS). It replaces the older BIOS architecture but supports much of the legacy BIOS functionality.

Like the legacy BIOS, the UEFI BIOS provides an interface to display the system information and configuration settings and to change the configuration of your computer before an OS is loaded. BIOS provides a secure runtime environment that supports a Graphic User Interface (GUI). In this environment, you can use either a pointing device (touch screen, touchpad, pointing stick, or USB mouse) or the keyboard to navigate and make menu and configuration selections. The UEFI BIOS also contains basic system diagnostics.

The UEFI BIOS provides functionality beyond that of the legacy BIOS. In addition, the UEFI BIOS works to initialize the computer's hardware before loading and executing the OS; the runtime environment allows the loading and execution of software programs from storage devices to provide more functionality, such as advanced hardware diagnostics (with the ability to display more detailed system information) and advanced firmware management and recovery software.

3. **Where is the UEFI BIOS located?**

The UEFI BIOS is located on a flash memory chip. You must use a utility to write to the chip.

4. **What kind of configuration data is stored on the DIMM Serial Presence Detect (SPD) memory module? How would this data be written?**

   The DIMM SPD memory contains information about the memory module, such as size, serial number, data width, speed and timing, voltage, and thermal information. This information is written by the module manufacturer and stored on an EEPROM. You cannot write to this EEPROM when the memory module is installed in a computer. Third-party tools do exist that can write to the EEPROM when the memory module is not installed in a computer. Various third-party tools are available to read SPD memory.

5. **What is meant by "Restore the nonvolatile memory found in Intel-based system boards"?**

   This message relates to clearing the Real Time Clock (RTC) CMOS memory that contains computer configuration data.

6. **How can the BIOS security be reset to factory defaults and erase the data?**

   **IMPORTANT:** Resetting results in the loss of information.

   These steps do not reset Custom Secure Boot Keys. See question and answer 7 for information about resetting the keys.

   a. Turn on or restart the computer, and then quickly press esc.

   b. Select **Main**, and then select **Reset Security to Factory Defaults**.

   c. Follow the on-screen instructions.

   d. Select **Main**, select **Save Changes and Exit**, and then follow the on-screen instructions.

7. **How can the Custom Secure Boot Keys be reset?**

   Secure Boot is a feature to ensure that only authenticated code can start on a platform. If you enabled Secure Boot and created Custom Secure Boot Keys, disabling Secure Boot does not clear the keys. You must also select to clear the Custom Secure Boot Keys. Use the same Secure Boot access procedure that you used to create the Custom Secure Boot Keys, but select to clear or delete all Secure Boot Keys.

   a. Turn on or restart the computer, and then quickly press esc.

   b. Select the **Security** menu, select **Secure Boot Configuration**, and then follow the on-screen instructions.

   c. At the **Secure Boot Configuration** window, select **Secure Boot**, select **Clear Secure Boot Keys**, and then follow the on-screen instructions to continue.

# Using HP Sure Start (select products only)

Select computer models are configured with HP Sure Start, a technology that continuously monitors your computer's BIOS for attacks or corruption.

If the BIOS becomes corrupted or is attacked, HP Sure Start restores the BIOS to its previously safe state, without user intervention. Those select computer models ship with HP Sure Start configured and enabled. HP Sure Start is configured and already enabled so that most users can use the HP Sure Start default configuration. Advanced users can customize the default configuration.

To access the latest documentation on HP Sure Start, go to http://www.hp.com/support.

# 12 Power cord set requirements

The power supplies on some computers have external power switches.

The voltage select switch feature on the computer permits it to operate from any line voltage of 100 V ac–120 V ac or 220 V ac–240 V ac. Power supplies on those computers that do not have external power switches are equipped with internal switches that sense the incoming voltage and automatically switch to the proper voltage.

The power cord set received with the computer meets the requirements for use in the country where you purchased the equipment.

Power cord sets for use in other countries must meet the requirements of the country where you use the computer.

## General requirements

These requirements are applicable to all countries.

1. The power cord must be approved by an acceptable accredited agency responsible for evaluation in the country where the power cord set will be installed.
2. The power cord set must have a minimum current capacity of 10A (7A Japan only) and a nominal voltage rating of 125 V ac or 250 V ac, as required by each country's power system.
3. The diameter of the wire must be a minimum of 0.75 $mm^2$ or 18AWG, and the length of the cord must be between 1.8 m (6 ft) and 3.6 m (12 ft).

The power cord should be routed so that it is not likely to be walked on or pinched by items placed upon it or against it. Particular attention should be paid to the plug, electrical outlet, and the point where the cord exits from the product.

⚠ **WARNING!** Do not operate this product with a damaged power cord set. If the power cord set is damaged in any manner, replace it immediately.

## Japanese power cord requirements

For use in Japan, use only the power cord received with this product.

**IMPORTANT:** Do not use the power cord received with this product on any other products.

## Country-specific requirements

This information provides additional requirements specific to a country.

**Table 12-1 Power cord country-specific requirements**

| Country | Accrediting Agency | Country | Accrediting Agency |
|---|---|---|---|
| Australia (1) | EANSW | Italy (1) | IMQ |
| Austria (1) | OVE | Japan (3) | METI |
| Belgium (1) | CEBC | Norway (1) | NEMKO |
| Canada (2) | CSA | Sweden (1) | SEMKO |
| Denmark (1) | DEMKO | Switzerland (1) | SEV |
| Finland (1) | SETI | United Kingdom (1) | BSI |
| France (1) | UTE | United States (2) | UL |
| Germany (1) | VDE | | |

1. The flexible cord must be Type HO5VV-F, 3-conductor, 0.75mm$^2$ conductor size. Power cord set fittings (appliance coupler and plug) must bear the certification mark of the agency responsible for evaluation in the country where it will be used.
2. The flexible cord must be Type SVT or equivalent, No. 18 AWG, 3 conductor. The plug must be a 2-pole grounding type with a NEMA 5-15P (15 A, 125 V) or NEMA 6-15P (15 A, 250 V) configuration.
3. Appliance coupler, flexible cord, and plug must bear a T mark and registration number in accordance with the Japanese Dentori Law. Flexible cord must be Type VCT or VCTF, 3-conductor, 0.75 mm$^2$ conductor size. Plug must be a 2-pole grounding type with a Japanese Industrial Standard C8303 (7 A, 125 V) configuration.

# 13 Specifications

This section provides specifications for your computer.

**Table 13-1 Specifications**

| | Metric | U.S. |
|---|---|---|
| **Dimensions** | | |
| Height | 100 mm | 3.94 in |
| Width | 384 mm | 15.10 in |
| Depth | 308 mm | 12.13 in |
| **Approximate weight** | 5.0 kg | 11.1 lb |
| **Temperature range** | | |
| Operating | 10°C to 35°C | 50°C to 95°F |
| Nonoperating | –30°F to 60°C | –22°F to 140°F |
| **NOTE:** Operating temperature is derated 1.0°C per 300 m (1000 ft) to 3000 m (10,000 ft) above sea level; no direct sustained sunlight. Maximum rate of change is 10° C/Hr. The upper limit might be limited by the type and number of options installed. | | |
| **Maximum altitude (unpressurized)** | | |
| Operating | 5,000 m | 16,404 ft |
| Nonoperating | 15,240 m | 50,000 ft |
| **Relative humidity (noncondensing)** | | |
| Operating | 10% to 90% | |
| Nonoperating (38.7°C max wet bulb) | 5% to 95% | |
| **Power supply** | | |
| Operating voltage range | 90 V ac to 264 V ac | |
| Rated voltage range[1] | 100 V ac to 240 V ac | |
| Rated line frequency | 50 Hz to 60 Hz | |
| Operating line frequency | 47 Hz to 63 Hz | |
| **Standard efficiency** | 450 W, 90% efficient | |
| | 260 W, 92% efficient | |

[1] This system uses an active power factor-corrected power supply. This allows the system to pass the CE mark requirements for use in the countries of the European Union. The active power factor-corrected power supply also has the added benefit of not requiring an input-voltage range select switch.

# Index


## A

access panel
  illustrated 5
  locked 59
  removal and replacement 21
access panel release latch
  removal and replacement 22
Advanced menu, Computer Setup 87
antenna cover, identifying 2, 3
antennas
  external 3
audible codes 102
audio line-out connector (green), identifying 2, 3
audio problems 66
audio-out (headphone)/audio-in (microphone) combo jack, identifying 1

## B

backup, creating 113
backups 113
battery
  disposal 11, 17, 18
battery replacement 35
beep codes 102
bezel blank
  removal 28
blinking lights 102
boot order, changing 114
booting options
  Full Boot 96
  Quick Boot 96

## C

cable management 11, 19
cable pinouts, SATA data 11, 19
card reader
  illustrated 6
  removal and replacement 47
changing a Power-On password 105
changing a Setup password 105
cleaning
  computer 11, 14, 16
  mouse 11, 14, 17
  safety precautions 11, 14
cleaning your computer
  disinfecting 15
  removing dirt and debris 15
CMOS
  clearing and resetting 105
components
  front 1
  rear 2
computer cleaning 11, 14, 16
computer features 1
computer major components
  illustrated 5
Computer Setup
  access problem 59
  Advanced menu 87
  Main menu 79
  Security menu 83
Computer Setup Utility 78
connectors
  power 2, 3
country power cord set
  requirements 122
Customer Support 58

## D

deleting a Power-On password 105
deleting a Setup password 105
DisplayPort connector, identifying 2, 3

## E

electrostatic discharge (ESD) 11
  preventing damage 11, 12
error
  codes 96, 102
error messages 96
expansion board
  illustrated 6
expansion card
  removal 41
expansion card fan
  removal and replacement 45
expansion slot covers, identifying 2, 3
external wireless antennas
  removal and replacement 56

## F

F10 Setup 78
  access problem 59
flash drive problems 74
front bezel
  illustrated 7
  removal and replacement 27
front bezel dust filter
  removal and replacement 28

## G

general problems 59
grounding methods 11, 12

## H

hard drive
  proper handling 11, 17, 18
  removal 38, 39
  SATA characteristics 11, 19
hard drive activity light, identifying 1
hard drive cage
  rotating 29
hard drive problems 64
hard drives 8
hardware installation problems 69
heat sink
  illustrated 6
  removal and replacement 48
helpful hints 59
hood lock
  removal and replacement 46
hood sensor
  removal and replacement 46
HP PC Hardware Diagnostics UEFI
  downloading 110
  failure ID code 109
  starting 110
  using 109
HP PC Hardware Diagnostics Windows
  accessing 107, 108
  downloading 108
  failure ID code 107
  installing 109
  using 107

HP Recovery media
recovery 114
HP Sure Recover 115
HP Sure Start 116, 121

I

illustrated parts catalog 5
installing
battery 35
memory 30
internal wireless antennas
removal and replacement 54
internet access problems 75

J

jacks
audio-out (headphone)/audio-in (microphone) 1
network 2, 3
RJ-45 (network) 2, 3

K

keyboard
cleaning 11, 14, 16
keyboard problems 69

L

lights
blinking PS/2 keyboard 102

M

Main menu, Computer Setup 79
mass storage devices 8
memory
installation 30
nonvolatile 116
problems 73
socket population 30
volatile 116
memory module
illustrated 7
miscellaneous parts 9
mouse
cleaning 11, 14, 17
problems 69

N

network jack, identifying 2, 3
network problems 71
nonvolatile memory 116
numeric error codes 96

O

operating guidelines 11, 14
optical drive
removal 22
optical drive, identifying 1
option board
removal and replacement 50
overheating, prevention 11, 14

P

password
Power-On 105
security 105
Setup 105
ports
USB 2, 3
USB SuperSpeed 10 Gbps 1
USB SuperSpeed 5 Gbps 2, 3
USB SuperSpeed Plus with HP Sleep and Charge 1
POST error messages 96
power button, identifying 1
power connector
identifying 2, 3
power cord set requirements
country specific 122
power problems 63
power supply
illustrated 6
operating voltage range 124
removal and replacement 44
Power-On password 105
printer problems 67
problems
audio 66
Computer Setup 59
F10 Setup 59
flash drive 74
general 59
hard drive 64
hardware installation 69
internet access 75
keyboard 69
memory 73
mouse 69
network 71
power 63
printer 67
software 76
processor
removal and replacement 49

R

rear fan
removal and replacement 26
recovery 113
discs 114
media 114
USB flash drive 114
recovery media 113
creating using HP Cloud Recovery Download Tool 113
creating using Windows tools 113
Remote HP PC Hardware Diagnostics
UEFI settings
customizing 111
using 111
removal and replacement
access panel release latch 22
card reader 47
expansion card fan 45
external wireless antennas 56
front bezel 21, 27
front bezel dust filter 28
heat sink 48
hood lock 46
hood sensor 46
internal wireless antennas 54
option board 50
power supply 44
processor 49
rear fan 26
riser boards 24
solid-state drive 40
speaker 36
system board 51
WLAN module 33
removing
battery 35
bezel blank 28
expansion card 41
hard drive 38, 39
optical drive 22
removing personal data from volatile system memory 116
restoring 113
restoring and recovery methods 114
riser boards
removal and replacement 24
RJ-45 (network) jack, identifying 2, 3
rotating
drive cage 29

## S

safety precautions
  cleaning 11, 14
SATA
  connectors on system board 11, 19
  data cable pinouts 11, 19
  hard drive characteristics 11, 19
screws, correct size 11, 17, 18
Security menu, Computer Setup 83
service considerations 11, 17
Setup password 105
slots
  memory card reader 1
  microSD memory card reader 1
software
  problems 76
  servicing computer 11, 17
solid-state drive module
  removal and replacement 40
solid-state drives 8
speaker
  illustrated 5
  removal and replacement 36
specifications
  computer 124
specifications, product 4
static electricity 11
system board
  illustrated 7
  removal and replacement 51
  SATA connectors 11, 19
system board connections 53
system memory, removing personal data from volatile 116
system restore 114
system restore point, creating 113

## T

temperature control 11, 14
tools, servicing 11, 17
Torx T15 screwdriver 11, 17
troubleshooting without diagnostics 58

## U

USB port, identifying 2, 3
USB SuperSpeed 10 Gbps port, identifying 1
USB SuperSpeed 5 Gbps port, identifying 2, 3
USB Type-C SuperSpeed 10 Gbps port with HP Sleep and Charge, identifying 1
USB Type-C SuperSpeed 20 Gbps port with HP Sleep and Charge, identifying 1
using Computer Setup Utilities 78

## V

ventilation, proper 11, 14

## W

Windows
  backup 113
  recovery media 113
  system restore point 113
Windows tools, using 113
WLAN module
  illustrated 6
  removal and replacement 33