

Cisco Industrial Routers and Industrial Wireless Access Points Antenna Guide

First Published: 2016-10-13

Last Modified: 2024-02-13

Americas Headquarters
Cisco Systems, Inc.
170 West Tasman Drive
San Jose, CA 95134-1706
USA
http://www.cisco.com
Tel: 408 526-4000
800 553-NETS (6387)
Fax: 408 527-0883

© 2016–2024 Cisco Systems, Inc. All rights reserved.



CONTENTS

CHAPTER 1 **Cisco Industrial Routers and Industrial Wireless Antenna Guide Overview** 1

Overview 1

General Safety Precautions 2

Guidelines to Achieving Optimal RF and Antenna Performance 3

Obtaining Technical Assistance 7

Additional Information 7

Antenna Information 7

Product Specific Guides for Industrial Routers 8

Cisco General Information 8

CHAPTER 2 **Antenna Selection Table** 9

Antenna Selection Overview 9

Currently Supported Antennas 9

Cellular 2G/3G/4G/5G Antennas 10

Tri Band 2.4/5/6 GHz Antennas 16

GPS/GNSS Antennas 17

WPAN, ISM, and LoRaWan Antennas 20

Wi-Fi Antennas 21

Single Band 2.4 GHz Antennas 21

Single Band 5 GHz Antennas 22

Dual Band 2.4 GHz + 5 GHz Antennas 22

Industrial Wireless Access Point Antennas 26

Planned End Of Service (EOS) Antennas 28

End Of Service (EOS) Antennas 30

CHAPTER 3 **Cisco RF Cables, Adapters, Lightning Arrestors, Extension Bases and other Accessories** 31

Cisco RF Cables, Adapters, Lightning Arrestors, Extension Bases and other Accessories 31
Cables 32
Cellular Antenna Extension Bases 39
Accessories 40

CHAPTER 4 Cisco N-type Lightning Arrestor 43
Introduction 43
Kit Contents 43
Technical Specifications 44
Warnings 45
Installation Considerations 45
Installing the Lightning Arrestor 45
Installation Steps 46
Suggested Cables 47

CHAPTER 5 Cisco 4G Indoor Ceiling-Mount Omnidirectional Antenna (4G-ANTM-OM-CM) 49
Overview 49
Technical Specifications 52
System Requirements 77
Installation Notes 77
General Safety Precautions 78
Installation Instructions 79
Communications, Services, and Additional Information 82
Cisco Bug Search Tool 82
Documentation Feedback 82
Cisco Support Community 82

CHAPTER 6 Cisco 4G/3G Omnidirectional Dipole Antenna (4G-LTE-ANTM-D) 83
Overview 83
Specifications 85
System Requirements 89
Installation Notes 89
General Safety Precautions 90
Guidelines to Achieving Optimal RF and Antenna Performance 92

Communications, Services, and Additional Information 95
Cisco Bug Search Tool 95
Documentation Feedback 95
Cisco Support Community 95

CHAPTER 7 Cisco Dual LTE-Single GPS Multi-band Antenna Installation Guide (4G-LTE-ANTM-O-3-B) 97
Overview 97
Parts List 98
Features of the 4G-LTE-ANTM-O-3-B Antenna 98
Technical Specifications 99
Supported Antennas 105
Supported Antenna Accessories 105
Antenna Options by Deployment Type 105
General Safety Precautions 106
Guidelines to Achieving Optimal RF and Antenna Performance 108
Installation Instructions 111
Deployment Scenarios 113
Communications, Services, and Additional Information 115
Cisco Bug Search Tool 115
Documentation Feedback 116
Cisco Support Community 116

CHAPTER 8 Cisco Multi-element, 9-in-1, LTE/Wi-Fi/GNSS antenna (5G-ANTM-O-4-B) 117
Overview 117
Antenna Features 117
Antenna Assembly 118
Technical Specifications 120
Mechanical Specifications 121
Electrical Specifications 121
Environmental and Operational Specifications 124
Antenna Radiation Patterns 124
Primary LTE/5G Antenna Radiation Patterns (LTE1 and LTE3) 124
Secondary LTE/5G Antenna Radiation Patterns (LTE2 and LTE4) 128
General Safety Precautions 134

Guidelines to Achieving Optimal RF and Antenna Performance 136
Installing the Antenna 139
Contents of the Antenna Kit 140
Tools and Equipment Required 140
Mounting on a Ceiling 140
Mounting on an Indoor Wall (Drywall) 144
Mounting on an Indoor Wall (Wood Surface or Stud) 149
Mounting on an Outdoor Wall 154
Connecting the Antenna to the Router 160
Communications, Services, and Additional Information 161
Cisco Bug Search Tool 161
Documentation Feedback 161
Cisco Support Community 161

CHAPTER 9 **Cisco Multi-Band Swivel Mount Dipole Antenna (5G-ANTM-SMA-D)** 163
Overview 163
Technical Specifications 164
Standalone Antenna Performance 165
Gain Plots 167
Mechanical Drawing 173
Installation Notes 174
General Safety Precautions 174
Guidelines to Achieving Optimal RF and Antenna Performance 176
Mounting the Antenna 179
Tools and Equipment Required 180
Choosing a Mounting Location 180
Communications, Services, and Additional Information 180
Cisco Bug Search Tool 180
Documentation Feedback 180
Cisco Support Community 180

CHAPTER 10 **Cisco Aironet 2.4 GHz 13-dBi Directional Antenna (AIR-ANT2413P2M-N)** 181
Overview 181
Technical Specifications 182

System Requirements 183
General Safety Precautions 183
Guidelines to Achieving Optimal RF and Antenna Performance 185
Installing the Antenna 188
Tools and Equipment Required 188
Mounting on a Pole 189
Installing the Optional Mounting Bracket Kit 194
Mounting on a Vertical Surface 194
Antenna Cable Information 200
Grounding the Antenna 201
Communications, Services, and Additional Information 201
Cisco Bug Search Tool 202
Documentation Feedback 202
Cisco Support Community 202

CHAPTER 11 **Cisco Aironet Omnidirectional Antennas AIR-ANT2450V-N, AIR-ANT2450VG-N, AIR-ANT2450V-N-HZ, and AIR-ANT2450HG-N** 203
Overview 203
Technical Specifications 204
Radiation Patterns 205
AIR-ANT2450V-N, AIR-ANT2450VG-N, and AIR-ANT2450V-N-HZ 206
System Requirements 207
General Safety Precautions 207
Guidelines to Achieving Optimal RF and Antenna Performance 209
Installation Notes 212
Choosing a Mounting Location 212
Tools and Equipment Required 212
Mounting the Antenna 213
Communications, Services, and Additional Information 213
Cisco Bug Search Tool 213
Documentation Feedback 213
Cisco Support Community 213

CHAPTER 12 **Cisco Aironet 6.5-dBi Diversity Patch Antenna (AIR-ANT2465P-R)** 215

Overview 215
Technical Specifications 216
System Requirements 218
General Safety Precautions 218
Guidelines to Achieving Optimal RF and Antenna Performance 220
Installing the Antenna 223
Tools and Equipment Required 224
Mounting on a Vertical Surface 224
Outdoor Installations 224
Suggested Cable 225
Grounding the Antenna 225
Communications, Services, and Additional Information 225
Cisco Bug Search Tool 226
Documentation Feedback 226
Cisco Support Community 226

CHAPTER 13 **Cisco Aironet 8-dBi Omni-Directional Antenna (AIR-ANT2480V-N) 227**
Overview 227
Technical Specifications 228
System Requirements 234
General Safety Precautions 234
Guidelines to Achieving Optimal RF and Antenna Performance 236
Installation Notes 239
Choosing a Mounting Location 240
Tools and Equipment Required 240
Mounting the Antenna 241
Communications, Services, and Additional Information 241
Cisco Bug Search Tool 242
Documentation Feedback 242
Cisco Support Community 242

CHAPTER 14 **Cisco Aironet Four-Port Dual-Band Polarization-Diverse Antenna (AIR-ANT2513P4M-N) 243**
Overview 243
Technical Specifications 243

2.4 GHz Antenna Radiation Patterns 246
5 GHz Antenna Radiation Patterns 250
Antenna and Bracket Dimensions 253
System Requirements 254
General Safety Precautions 254
Guidelines to Achieving Optimal RF and Antenna Performance 256
Installing the Antenna 259
Contents of Antenna Bracket Kit 259
Tools and Equipment Required 260
Mounting on a Wall or Ceiling 261
Mounting on a Pole or Mast 263
Suggested Cable 264
Painting the Antenna 264
Communications, Services, and Additional Information 265
Cisco Bug Search Tool 265
Documentation Feedback 265
Cisco Support Community 265

CHAPTER 15 **Cisco Aironet Four-Element, MIMO, Dual-Band Ceiling Mount Omni-Directional Antenna (AIR-ANT2524V4C-R) 267**
Overview 267
Technical Specifications 268
Radiation Patterns 269
System Requirements 276
General Safety Precautions 276
Guidelines to Achieving Optimal RF and Antenna Performance 278
Choosing a Mounting Location 281
Installing the Antenna 281
Tools and Equipment Required 282
Mounting the Antenna on a Ceiling Tile 282
Suggested Cable 284
Communications, Services, and Additional Information 284
Cisco Bug Search Tool 284
Documentation Feedback 284

Cisco Support Community 284

CHAPTER 16 Cisco Aironet Dual-band Dipole Antenna (AIR-ANT2524DB-R, AIR-ANT2524DG-R, and AIR-ANT2524DW-R) 285

Overview 285

Technical Specifications 286

Features 288

System Requirements 288

General Safety Precautions 288

Guidelines to Achieving Optimal RF and Antenna Performance 290

Installing the Antenna 293

Communications, Services, and Additional Information 293

Cisco Bug Search Tool 294

Documentation Feedback 294

Cisco Support Community 294

CHAPTER 17 Cisco Aironet Dual-Band MIMO Wall-Mounted Omnidirectional Antenna (AIR-ANT2544V4M-R) 295

Overview 295

Technical Specifications 296

Radiation Patterns 298

System Requirements 305

General Safety Precautions 305

Guidelines to Achieving Optimal RF and Antenna Performance 307

Installing the Antenna 310

Tools and Equipment Required 310

Mounting on a Vertical Surface 311

Outdoor Installations 315

Mounting on a Ceiling 315

Mounting on a Mast 316

Suggested Cable 317

Communications, Services, and Additional Information 317

Cisco Bug Search Tool 317

Documentation Feedback 317

Cisco Support Community 317

CHAPTER 18 Cisco Aironet Dual-Band Omni-Directional Antenna (AIR-ANT2547V-N, AIR-ANT2547V-N-HZ, and ANT2547VG-N) 319

Overview 319

Technical Specifications 320

Radiation Patterns 321

System Requirements 324

General Safety Precautions 324

Guidelines to Achieving Optimal RF and Antenna Performance 326

Installation Notes 329

Choosing a Mounting Location 329

Tools and Equipment Required 330

Mounting the Antenna 330

Communications, Services, and Additional Information 330

Cisco Bug Search Tool 330

Documentation Feedback 330

Cisco Support Community 331

CHAPTER 19 Cisco Aironet 2.4 GHz and 5 GHz Dual-Band Polarization-Diverse Directional Array Antenna (AIR-ANT2566D4M-R) 333

Overview 333

Technical Specifications 333

Azimuth and Elevation Radiation Patterns 335

Contents of the Antenna and Bracket Kit 337

Dimensions of the Antenna and Brackets 337

General Safety Precautions 340

Guidelines to Achieving Optimal RF and Antenna Performance 342

Installing the Antenna 345

Tools and Equipment Required 346

Mounting on a Wall or Ceiling 346

Mounting on a Pole or Mast 350

Flush Mounting on a Wall Without Mount Brackets 351

Recommended Cable 353

Painting the Antenna 353

Communications, Services, and Additional Information 353
Cisco Bug Search Tool 353
Documentation Feedback 353
Cisco Support Community 354

CHAPTER 20 Cisco Aironet 2.4-GHz/5-GHz MIMO 4-Element Patch Antenna (AIR-ANT2566P4W-R) 355
Overview 355
Technical Specifications 356
Radiation Patterns 357
System Requirements 358
General Safety Precautions 358
Guidelines to Achieving Optimal RF and Antenna Performance 360
Installing the Antenna 363
Tools and Equipment Required 363
Mounting on a Vertical Surface 364
Outdoor Installations 364
Suggested Cable 365
Communications, Services, and Additional Information 365
Cisco Bug Search Tool 365
Documentation Feedback 365
Cisco Support Community 365

CHAPTER 21 Cisco Aironet Dual-Band Omni-Directional Antenna (AIR-ANT2568VG-N) 367
Overview 367
Technical Specifications 368
Radiation Patterns 369
System Requirements 371
General Safety Precautions 371
Guidelines to Achieving Optimal RF and Antenna Performance 373
Installation Notes 376
Choosing a Mounting Location 376
Tools and Equipment Required 376
Mounting the Antenna 377
Communications, Services, and Additional Information 377

Cisco Bug Search Tool 377
Documentation Feedback 377
Cisco Support Community 377

CHAPTER 22 **Cisco Aironet 2.4-GHz/5-GHz 8-dBi Directional Antenna (AIR-ANT2588P3M-N) 379**
Overview 379
Technical Specifications 380
Azimuth and Elevation Radiation Patterns 382
System Requirements 385
General Safety Precautions 385
Guidelines to Achieving Optimal RF and Antenna Performance 387
Installing the Antenna 390
Tools and Equipment Required 390
Mounting on a Pole 391
Mounting on a Vertical Surface 394
Antenna Cable Information 396
Grounding the Antenna 397
Communications, Services, and Additional Information 397
Cisco Bug Search Tool 398
Documentation Feedback 398
Cisco Support Community 398

CHAPTER 23 **Cisco Aironet 5-GHz 13-dBi Directional Antenna (AIR-ANT5114P2M-N) 399**
Overview 399
Technical Specifications 400
Elevation and Azimuth Plane Patterns 401
System Requirements 401
General Safety Precautions 402
Guidelines to Achieving Optimal RF and Antenna Performance 403
Installing the Antenna 407
Required Tools and Equipment 407
Mounting on a Pole 407
Installing the Optional Mounting Bracket Kit 412
Mounting on a Vertical Surface 412

Antenna Cable Information 414
Grounding the Antenna 414
Communications, Services, and Additional Information 415
Cisco Bug Search Tool 415
Documentation Feedback 415
Cisco Support Community 415

CHAPTER 24 Cisco Aironet Omnidirectional Antennas AIR-ANT5150VG-N and AIR-ANT5150HG-N 417
Overview 417
Technical Specifications 418
Radiation Patterns 419
System Requirements 420
General Safety Precautions 420
Guidelines to Achieving Optimal RF and Antenna Performance 422
Installation Notes 425
Tools and Equipment Required 425
Mounting the Antenna 425
Communications, Services, and Additional Information 426
Cisco Bug Search Tool 426
Documentation Feedback 426
Cisco Support Community 426

CHAPTER 25 Cisco Aironet 8-dBi Omnidirectional Antenna (AIR-ANT5180V-N) 427
Overview 427
Technical Specifications 428
Radiation Patterns 429
System Requirements 430
General Safety Precautions 430
Guidelines to Achieving Optimal RF and Antenna Performance 432
Installation Notes 435
Tools and Equipment Required 436
Mounting the Antenna 437
Communications, Services, and Additional Information 438
Cisco Bug Search Tool 438

Documentation Feedback 438
Cisco Support Community 438

CHAPTER 26 **Cisco ANT-5G-MP-OUT-N 439**
Overview 439
Technical Specifications 440
Radiation Patterns 441
Frequency Plots 441
XY Plane Plots 443
XZ Plane Plots 446
Mechanical Drawing 449
System Requirements 450
General Safety Precautions 450
Guidelines to Achieving Optimal RF and Antenna Performance 452
Installation Notes 455
Tools and Equipment Required 456
Mounting the Antenna 456
Communications, Services, and Additional Information 456
Cisco Bug Search Tool 456
Documentation Feedback 456
Cisco Support Community 456

CHAPTER 27 **Cisco 4-in-1 Fixed Infrastructure Antenna w/bracket (ANT-4-5G4-O) 457**
Overview 457
Technical Specifications 459
Electrical Specifications 459
Mechanical Specifications 460
Antenna Assembly 460
Standalone Antenna Performance 461
Radiation Patterns 463
General Safety Precautions 465
Guidelines to Achieving Optimal RF and Antenna Performance 466
Installing the Antenna 470
Communications, Services, and Additional Information 471

Cisco Bug Search Tool 471
Documentation Feedback 472
Cisco Support Community 472

CHAPTER 28 Cisco 4G (LTE) / 5G (FR1) Omnidirectional Outdoor Antenna (ANT-5G-OMNI-OUT-N) 473
Overview 473
Technical Specifications 474
Standalone Antenna Performance 476
Radiation Patterns 478
General Safety Precautions 479
Guidelines to Achieving Optimal RF and Antenna Performance 480
Installation Notes 484
Tools and Equipment Required 484
Mounting the Antenna 484
Communications, Services, and Additional Information 484
Cisco Bug Search Tool 484
Documentation Feedback 485
Cisco Support Community 485

CHAPTER 29 Cisco Cellular 2-in-1 Vehicle Mount and Fixed Infrastructure Antenna (ANT-2-4G2-O) 487
Overview 487
Antenna Features 487
Antenna Model 488
Antenna Assembly 489
Technical Specifications 490
Radio Frequency Specifications 491
Antenna Radiation Patterns 491
Environmental and Operational Specifications 493
Mechanical Specifications 494
Power Specifications 494
General Safety Precautions 494
Guidelines to Achieving Optimal RF and Antenna Performance 496
Installing the Antenna 499
Contents of the Antenna Kit 499

Tools and Equipment Required 500
Mounting the Antenna 500
Connecting the Antenna to the Router 500
Communications, Services, and Additional Information 500
Cisco Bug Search Tool 501
Documentation Feedback 501
Cisco Support Community 501

CHAPTER 30 **Cisco Dual Port, Dual Band Vehicle Mount and Fixed Infrastructure WLAN Antenna (ANT-2-WLAN-D-O) 503**
Overview 503
Antenna Features 503
Antenna Model 504
Antenna Assembly 504
Technical Specifications 505
Radio Frequency Specifications 506
Antenna Radiation Patterns 506
Environmental and Operational Specifications 511
Mechanical Specifications 511
Power Specifications 512
General Safety Precautions 512
Guidelines to Achieving Optimal RF and Antenna Performance 514
Installing the Antenna 517
Contents of the Antenna Kit 517
Tools and Equipment Required 517
Mounting the Antenna 517
Connecting the Antenna to the Router 518
Communications, Services, and Additional Information 518
Cisco Bug Search Tool 518
Documentation Feedback 518
Cisco Support Community 518

CHAPTER 31 **Cisco Cellular and GPS 3-in-1 Vehicle Mount and Fixed Infrastructure Antenna (ANT-3-4G2G1-O) 519**
Overview 519

Antenna Features 519
Antenna Model 520
Antenna Assembly 520
Technical Specifications 521
Antenna Radiation Patterns 524
General Safety Precautions 526
Guidelines to Achieving Optimal RF and Antenna Performance 528
Installing the Antenna 531
Contents of the Antenna Kit 531
Tools and Equipment Required 531
Mounting the Antenna 531
Connecting the Antenna to the Router 532
Communications, Services, and Additional Information 532
Cisco Bug Search Tool 532
Documentation Feedback 532
Cisco Support Community 533

CHAPTER 32 **Cisco Multiband Panel Outdoor 3G Antenna (ANT-3G-PNL-OUT-N) 535**
Overview 535
Technical Specifications 535
RF Specifications 536
Mechanical Specifications 537
Contents of the Antenna Kit 537
General Safety Precautions 538
Guidelines to Achieving Optimal RF and Antenna Performance 540
Antenna Installation 543
Tools and Equipment Required 543
Installing the Antenna 543
Connecting the Lightning Arrestor 548
Connecting the Antenna to the Router 548
Communications, Services, and Additional Information 548
Cisco Bug Search Tool 549
Documentation Feedback 549
Cisco Support Community 549

CHAPTER 33 Cisco Multiband Indoor 4G Volcano Antenna (ANT-4G-CM-IN-TNC) 551

Overview 551

Technical Specifications 551

RF Specifications 552

Mechanical Specifications 553

Radiation Patterns 553

Contents of the Antenna Kit 554

General Safety Precautions 555

Guidelines to Achieving Optimal RF and Antenna Performance 557

Antenna Installation 560

Tools and Equipment Required 560

Installing the Antenna 560

Communications, Services, and Additional Information 562

Cisco Bug Search Tool 562

Documentation Feedback 562

Cisco Support Community 562

CHAPTER 34 Cisco Indoor Swivel-mount Dipole Antenna (ANT-4G-DP-IN-TNC) 563

Overview 563

Technical Specifications 564

RF Specifications 565

Mechanical Specifications 565

Radiation Patterns 566

General Safety Precautions 566

Guidelines to Achieving Optimal RF and Antenna Performance 568

Antenna Installation 571

Communications, Services, and Additional Information 572

Cisco Bug Search Tool 572

Documentation Feedback 572

Cisco Support Community 573

CHAPTER 35 Cisco Outdoor Omnidirectional Antenna for 2G/3G/4G Cellular (ANT-4G-OMNI-OUT-N) 575

Overview 575

Technical Specifications 575
RF Specifications 576
Mechanical Specifications 577
Radiation Patterns 578
Antenna Kit 581
General Safety Precautions 582
Guidelines to Achieving Optimal RF and Antenna Performance 584
Antenna Installation 587
Tools and Equipment Required 587
Installing the Antenna 587
Communications, Services, and Additional Information 589
Cisco Bug Search Tool 589
Documentation Feedback 589
Cisco Support Community 589

CHAPTER 36 **Cisco Multiband Panel Outdoor 4G MIMO Antenna (ANT-4G-PNL-OUT-N) 591**
Overview 591
Antenna Features 591
Antenna Model 592
Antenna Assembly 592
Technical Specifications 592
Environmental Specifications 593
Mechanical Specifications 593
Power Specifications 593
Radio Frequency Specifications 594
Antenna Radiation Patterns 595
General Safety Precautions 608
Guidelines to Achieving Optimal RF and Antenna Performance 610
Installing the Antenna 613
Contents of the Antenna Kit 613
Tools and Equipment Required 613
Preparing the Antenna for Installation 614
Mounting the Antenna 614
Connecting the Lightning Arrestor 614

Connecting the Antenna to the Router 615
Communications, Services, and Additional Information 615
Cisco Bug Search Tool 615
Documentation Feedback 615
Cisco Support Community 615

CHAPTER 37 **Cisco Integrated 4G Low-profile Outdoor Saucer Antenna (ANT-4G-SR-OUT-TNC) 617**
Overview 617
Technical Specifications 617
RF Specifications 618
Mechanical Specifications 619
Radiation Patterns 619
General Safety Precautions 621
Guidelines to Achieving Optimal RF and Antenna Performance 622
Antenna Installation 626
Tools and Equipment Required 626
Installing the Antenna 626
Communications, Services, and Additional Information 627
Cisco Bug Search Tool 628
Documentation Feedback 628
Cisco Support Community 628

CHAPTER 38 **Cisco Multi-element, 5-in-1, 5G (FR1)/LTE/GNSS (ANT-5-5G4G1-O) 629**
ANT-5-5G4G1-O Overview 629
Antenna Features 630
Antenna Assembly 631
Technical Specifications 634
Mechanical Specifications 634
Electrical Specifications 635
Antenna Radiation Patterns 636
VSWR vs Frequency Radiation Patterns 636
Peak Gain vs Frequency 637
Efficiency vs Frequency 637
X Y Plane 638

X Z Plane 638
GNSS Antenna - LNA Gain and Radiation Pattern (YZ Plane) Plots 639
General Safety Precautions 640
Guidelines to Achieving Optimal RF and Antenna Performance 641
Installing the Antenna 645
Contents of the Antenna Kit 645
Tools and Equipment Required 645
Mounting the Antenna 645
Connecting the Antenna to the Router 645
Communications, Services, and Additional Information 646
Cisco Bug Search Tool 646
Documentation Feedback 646
Cisco Support Community 646

CHAPTER 39 **Cisco 5-in-1 Vehicle Mount and Fixed Infrastructure Antenna (ANT-5-4G2WL2G1-O) 647**
Overview 647
Antenna Features 647
Antenna Model 648
Antenna Assembly 648
Technical Specifications 650
Radio Frequency Specifications 651
Environmental and Operational Specifications 653
Mechanical Specifications 653
Power Specifications 654
Antenna Radiation Patterns 654
WLAN Wi-Fi Antenna Radiation Patterns 656
GPS Radiation Patterns 658
General Safety Precautions 658
Guidelines to Achieving Optimal RF and Antenna Performance 660
Installing the Antenna 663
Contents of the Antenna Kit 663
Tools and Equipment Required 663
Mounting the Antenna 664
Connecting the Antenna to the Router 664

Communications, Services, and Additional Information 664
Cisco Bug Search Tool 664
Documentation Feedback 665
Cisco Support Community 665

CHAPTER 40 Cisco 7-in-1 Vehicle Mount and Fixed Infrastructure Antenna (ANT-7-5G4WL2G1-O) 667
Overview 667
Antenna Features 668
Antenna Assembly 669
Technical Specifications 670
Mechanical Specifications 670
Electrical Specifications 671
Environmental and Operational Specifications 672
Antenna Radiation Patterns 672
VSWR vs Frequency Radiation Patterns 672
Return Loss / Isolation vs Frequency Radiation Patterns 673
Peak Gain, Frequency, and Efficiency 677
X, Y, and Z Planes 679
GNSS LNA Gain and out of band rejection 686
General Safety Precautions 687
Guidelines to Achieving Optimal RF and Antenna Performance 689
Installing the Antenna 692
Contents of the Antenna Kit 692
Tools and Equipment Required 692
Mounting the Antenna 693
Connecting the Antenna to the Router 693
Communications, Services, and Additional Information 693
Cisco Bug Search Tool 693
Documentation Feedback 694
Cisco Support Community 694

CHAPTER 41 Cisco GNSS Antenna (ANT-GNSS-OUT-TNC) 695
Overview 695
Electrical Specifications 696

Mechanical Specifications 697
Environmental Specifications 697
Mechanical Drawing 697
Radiation Charts 698
Radiation Patterns 700
General Safety Precautions 702
Guidelines to Achieving Optimal RF and Antenna Performance 704

CHAPTER 42 Cisco GPS Antenna (ANT-GPS-OUT-TNC) 709
Overview 709
Technical Specifications 709
RF Specifications 710
Mechanical and Environmental Specifications 711
Mechanical Drawing 712
General Safety Precautions 713
Guidelines to Achieving Optimal RF and Antenna Performance 715
Antenna Installation 718
Communications, Services, and Additional Information 719
Cisco Bug Search Tool 720
Documentation Feedback 720
Cisco Support Community 720

CHAPTER 43 Cisco Outdoor 5 dBI Omni Antenna for 863-928 MHz WPAN, LoRaWan, and ISM (ANT-LPWA-DB-O-N-5) 721
Overview 721
Technical Specifications 721
Specifications 722
Dimensions 723
Antenna Radiation Patterns 725
General Safety Precautions 727
Guidelines to Achieving Optimal RF and Antenna Performance 728
Antenna Installation 732
Tools and Equipment Required 732
Mounting Components 732

Communications, Services, and Additional Information 734
Cisco Bug Search Tool 734
Documentation Feedback 734
Cisco Support Community 734

CHAPTER 44 **Cisco Omnidirectional Dipole Antenna (ANT-LPWA-SMA-D) 735**
Overview 735
Specifications 736
Antenna Radiation Patterns 738
Installation Instructions 740
General Safety Precautions 740
Guidelines to Achieving Optimal RF and Antenna Performance 742
Communications, Services, and Additional Information 745
Cisco Bug Search Tool 746
Documentation Feedback 746
Cisco Support Community 746

CHAPTER 45 **Cisco Multi-purpose Integrated Antenna (ANT-MP-INT-OUT-M) 747**
Overview 747
Technical Specifications 747
RF Specifications 748
Mechanical Specifications 749
Radiation Patterns 749
Integrated Antenna Kit 754
Integrated Antenna End Kit Inventory 755
Mounted Antenna End Kit Inventory 755
General Safety Precautions 755
Guidelines to Achieving Optimal RF and Antenna Performance 757
Antenna Installation 760
Installation Notes 760
Tools and Equipment Required 760
Installing the Antenna 761
Communications, Services, and Additional Information 762
Cisco Bug Search Tool 762

Documentation Feedback 762
Cisco Support Community 762

CHAPTER 46 ANT-MP2-I-OUT-M and ANT-MP2-I-O-SS-M Antenna and Cable Kits 763
Overview 763
Technical Specifications 763
RF Specifications 764
Mechanical Specifications 765
Radiation Patterns 766
Integrated Antenna Kits 770
Integrated Antenna Kit Inventory 770
General Safety Precautions 771
Guidelines to Achieving Optimal RF and Antenna Performance 772
Antenna Installation 776
Installation Notes 776
Tools and Equipment Required 776
Install the Antenna onto the CGR 1240 Router 776
Communications, Services, and Additional Information 778
Cisco Bug Search Tool 778
Documentation Feedback 778
Cisco Support Community 778

CHAPTER 47 Cisco Vandal Resistant Omni-directional Dome Antenna for 860-928 MHz ISM, WPAN and LoRaWAN (ANT-UN-MP-OUT-QMA) 779
Overview 779
Technical Specifications 779
Specifications 780
Vandal Resistance 783
Dimensions 783
Antenna Radiation Patterns 784
General Safety Precautions 787
Guidelines to Achieving Optimal RF and Antenna Performance 789
Antenna Installation 792
Tools and Equipment Required 792

Mounting Components 792
Mounting the Antenna 793
Using the McMaster Carr Stud Driven Hole Punch 794
Communications, Services, and Additional Information 795
Cisco Bug Search Tool 796
Documentation Feedback 796
Cisco Support Community 796

CHAPTER 48 **Cisco WPAN Dipole Antenna (ANT-WPAN-OD-OUT-N) 797**
Overview 797
Antenna Features 797
Technical Specifications 799
RF Specifications 799
Radiation Patterns 799
Environmental and Mechanical Specifications 800
General Safety Precautions 801
Guidelines to Achieving Optimal RF and Antenna Performance 803
Installing the Antenna 806
Contents of the Antenna Kit 806
Tools and Equipment Required 806
Mounting the Antenna 806
Communications, Services, and Additional Information 807
Cisco Bug Search Tool 807
Documentation Feedback 807
Cisco Support Community 807

CHAPTER 49 **Cisco Outdoor Omni Antenna for 900 MHz WPAN (ANT-WPAN-OM-OUT-N) 809**
Overview 809
Technical Specifications 809
RF Specifications 810
Mechanical Specifications 810
Radiation Patterns 811
General Safety Precautions 812
Guidelines to Achieving Optimal RF and Antenna Performance 813

Antenna Installation 817
Tools and Equipment Required 817
Attaching the Mounting Bracket 817
Installing the Module into the Router 818
Communications, Services, and Additional Information 819
Cisco Bug Search Tool 819
Documentation Feedback 819
Cisco Support Community 819

CHAPTER 50 **Cisco WPAN Yagi Antenna (ANT-WPAN-Y-OUT-N) 821**
Overview 821
Technical Specifications 822
RF Specifications 822
Environmental and Mechanical Specifications 823
Radiation Patterns 823
General Safety Precautions 833
Guidelines to Achieving Optimal RF and Antenna Performance 835
Installing the Antenna 838
Contents of the Antenna Kit 838
Tools and Equipment Required 838
Preparing the Antenna for Installation 839
Mounting the Antenna 839
Connecting the Lightning Arrestor 839
Connecting the Antenna to the Router 839
Communications, Services, and Additional Information 839
Cisco Bug Search Tool 840
Documentation Feedback 840
Cisco Support Community 840

CHAPTER 51 **Cisco Indoor/Outdoor Active GPS Antenna (GPS-ACT-ANTM-SMA) 841**
Overview 841
Specifications 841
General Safety Precautions 842
Guidelines to Achieving Optimal RF and Antenna Performance 844

Installing the Cisco Active GPS Antenna 847
Installation Guidelines for the Cisco Active GPS Antenna 847
Mounting the Cisco Active GPS Antenna Without Bracket 848
Mounting the Cisco Active GPS Antenna With the Bracket 848
Communications, Services, and Additional Information 849
Cisco Bug Search Tool 849
Documentation Feedback 849
Cisco Support Community 850

CHAPTER 52 **Cisco 2.4/5/6 GHz Tri-Band Omnidirectional Antenna (IW-ANT-OMH-2567-N) 851**
Overview 851
Specifications 853
Radiation Patterns 854

CHAPTER 53 **Cisco 2.4/5/6 GHz Tri-Band Omnidirectional Antenna (IW-ANT-OMV-2567-N) 857**
Overview 857
Specifications 859
Radiation Patterns 860

CHAPTER 54 **Cisco Antenna Mount, L Bracket, V-Bolt, Electrogalvanized (IW-ACCMK-OMHV) 863**
(IW-ACCMK-OMHV) Mounting Kit Overview 863

CHAPTER 55 **Cisco Flat Panel Base Station Dual-Slant Polarization Antenna (IW-ANT-DS9-516-N) 867**
Overview 867
Electrical Specifications 868
Mechanical Specifications 869
Environmental Specifications 869
Mechanical Drawing 870
Installation Instructions 871
Radiation Patterns 871

CHAPTER 56 **Cisco indoor/outdoor, active GNSS antenna (IW-ANT-GNSS-SMA) 873**
Overview 873

Specifications 874
Mechanical Drawing 875
Standalone Antenna Performance 876
Radiation Patterns 877
Installation Instructions 879

CHAPTER 57 Cisco Symmetrical Horn CC Antenna (IW-ANT-H90-510-N) 881
Overview 881
Technical Specifications 882
Performance Specifications 882
Mechanical Drawing 883
Installation Instructions 884
Radiation Patterns 890

CHAPTER 58 Cisco Horizontally Polarized Omnidirectional Antenna (IW-ANT-OMH-55-N) 893
Overview 893
Electrical Specifications 894
Mechanical and Environmental Specifications 894
Mechanical Drawing 894
Radiation Patterns 895

CHAPTER 59 Cisco 4.9-6 GHz Omni Mobile WiFi Antenna (IW-ANT-OMM-53-N) 899
Overview 899
Specifications 900
Mechanical Drawing 901
Radiation Patterns 902

CHAPTER 60 Cisco Horizontally Polarized Omnidirectional Base Station Antenna (IW-ANT-OMV-55-N) 907
Overview 907
Electrical Specifications 908
Mechanical and Environmental Specifications 908
Mechanical Drawing 908
Radiation Patterns 909

CHAPTER 61 Industrial Wireless 2-port High Gain Panel Antenna (IW-ANT-PNL-515-N) 913

Overview 913

Specifications 915

Mechanical Drawings 916

Radiation Charts 920

Installation Options 922

CHAPTER 62 Cisco Spot-S 2x2 Wi-Fi MIMO Antenna (IW-ANT-PNL-59-N) 923

Overview 923

Electrical Specifications 924

Mechanical Specifications 925

Environmental Specifications 925

Mechanical Drawing 925

Antenna Installation 926

Antenna Gain 929

Antenna S Patterns 929

Antenna Radiation Patterns 930

CHAPTER 63 Cisco Bi-Directional Train Top Antenna (IW-ANT-SKD-513-Q) 955

Overview 955

Electrical Specifications 956

Mechanical and Environmental Specifications 956

Mechanical Drawing 956

Installation Instructions 957

Radiation Patterns 957

CHAPTER 64 Cisco Directional Train Top Antenna (IW-ANT-SKS-514-Q) 961

Overview 961

Electrical Specifications 962

Mechanical and Environmental Specifications 962

Mechanical Drawing 962

Installation Instructions 963

Radiation Patterns 963

CHAPTER 65 Cisco Dual Polarization Base Station Antenna (IW-ANT-SS9-516-N) 967

Overview 967

Electrical Specifications 968

Mechanical Specifications 969

Environmental Specifications 969

Mechanical Drawing 970

Installation Instructions 971

Radiation Patterns 971

CHAPTER 66 Cisco 4G LTEA, 4G LTE, and 3G Omnidirectional Dipole Antenna (LTE-ANTM-SMA-D) 981

Overview 981

Specifications 982

Antenna Radiation Patterns 984

General Safety Precautions 989

Guidelines to Achieving Optimal RF and Antenna Performance 991

Installation Instructions 994

Related Documentation 995

Communications, Services, and Additional Information 995

Cisco Bug Search Tool 995

Documentation Feedback 995

Cisco Support Community 996

CHAPTER 67 Cisco 4G LTEA, 4G LTE, and 3G Omnidirectional Dipole Antenna (LTE-ANTM2-SMA-D) 997

Overview 997

Specifications 998

Antenna Radiation Patterns 1001

Gain Plots 617-900 MHz 1004

Gain Plots 1400-2700 MHz 1006

Gain Plots 3400-3900 MHz 1008

Gain Plots 5150-6000 MHz 1010

General Safety Precautions 1012

Guidelines to Achieving Optimal RF and Antenna Performance 1013

Installation Instructions 1017

Related Documentation 1017
Communications, Services, and Additional Information 1017
Cisco Bug Search Tool 1017
Documentation Feedback 1017
Cisco Support Community 1018

CHAPTER 68 **Cisco Indoor, Dipole Antenna, single-port (W-ANTM2050D-RPSMA) 1019**
Overview 1019
Specifications 1020
Antenna Radiation Patterns 1021
Antenna Impedance/VSWR 1024
Other Patterns 1025
General Safety Precautions 1027
Guidelines to Achieving Optimal RF and Antenna Performance 1028
Installation Instructions 1032
Related Documentation 1032
Communications, Services, and Additional Information 1032
Cisco Bug Search Tool 1032
Documentation Feedback 1033
Cisco Support Community 1033

CHAPTER 69 **Outdoor Panel Antenna for WiMAX 1.8, 2.5, and 3.8 GHz 1035**
Overview 1035
WiMAX 1.8 GHz Technical Specifications 1036
RF Specifications 1036
Mechanical Specifications 1037
WiMAX 2.5 GHz Technical Specifications 1037
Radiation Patterns 1038
WiMAX 3.8 GHz Technical Specifications 1038
General Safety Precautions 1039
Guidelines to Achieving Optimal RF and Antenna Performance 1041
Antenna Installation 1044
Tools and Equipment Required 1044
Installing the Antenna 1044

Connecting the Antenna to the Router 1049
Communications, Services, and Additional Information 1049
Cisco Bug Search Tool 1050
Documentation Feedback 1050
Cisco Support Community 1050

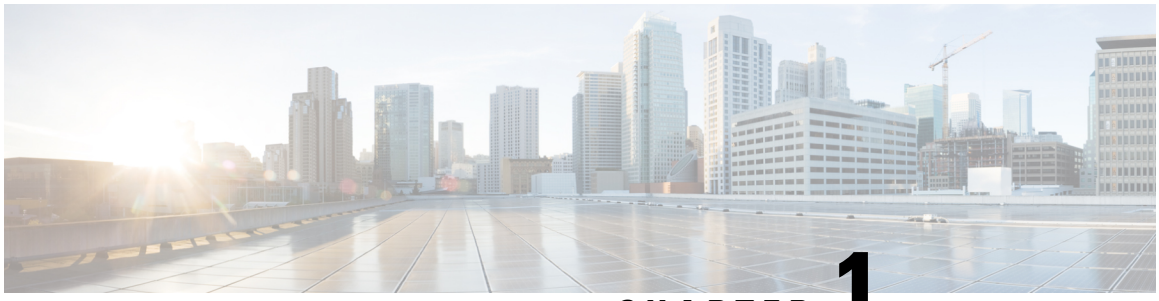

CHAPTER 1

Cisco Industrial Routers and Industrial Wireless Antenna Guide Overview

This chapter contains the following:

- Overview, on page 1
- General Safety Precautions, on page 2
- Guidelines to Achieving Optimal RF and Antenna Performance, on page 3
- Obtaining Technical Assistance , on page 7
- Additional Information, on page 7

Overview

This document provides the descriptions and installation instructions for wireless antennas supported on the Cisco Industrial Series Routers and Industrial Wireless Access Points. This guide is not intended to replace existing hardware installation guides, software configuration guides, or other sources of information that are product specific. Instead, this guide is intended to provide a single source of antenna information and supported platforms for the Industrial Routers and Industrial Wireless Access Points.

This guide does not cover antenna or accessories compatibility with indoor enterprise products, although it does cover a number of indoor use cases for industrial products.

Antennas might be installed into the host router prior to delivery or ordered separately as a field-replaceable unit. Please consult your products Hardware Installation Guide for details.

Deciding which antenna to use involves many factors such as coverage area, maximum distance, indoor location, outdoor location, and antenna height.

When antennas are used indoors, the building geometry, construction materials, ceiling height, and internal obstructions must be considered. In outdoor environments, obstructions such as trees, vehicles, buildings, and hills must be considered.

General Safety Precautions

Warning This warning symbol means danger. You are in a situation that could cause bodily injury. Before you work on any equipment, be aware of the hazards involved with electrical circuitry and be familiar with standard practices for preventing accidents. Use the statement number provided at the end of each warning to locate its translation in the translated safety warnings that accompanied this device. **Statement 1071**

Warning Do not work on the system or connect or disconnect cables during periods of lightning activity. **Statement 1001**

Warning Do not locate the outdoor antenna near overhead power lines or other electric light or power circuits, or where it can come into contact with such circuits. When installing the antenna, take extreme care not to come into contact with such circuits, as they may cause serious injury or death. For proper installation and grounding of the antenna, please refer to national and local codes (for example, U.S.:NFPA 70, National Electrical Code, Article 810, Canada:Canadian Electrical Code, Section 54). **Statement 1052**

Warning In order to comply with FCC radio frequency (RF) exposure limits, antennas should be located at a minimum of 7.9 inches (20 cm) or more from the body of all persons. **Statement 332**

Note For your safety, and to help you achieve a good installation, please read and follow these safety precautions.

Mast Mounted or Building Mounted Installations

The following instructions are common to most mast mounted or building mounted installations. For specific installation instructions for each antenna, see the antenna data-sheet and the router hardware installation guide.

- Find someone to help you—installing an antenna is often a two-person job.
- Select your installation site with safety, as well as performance, in mind. Remember that electric power lines and phone lines look alike. For your safety, assume that any overhead line can kill you.
- Contact your electric power company. Tell them your plans and ask them to come look at your proposed installation.
- Do not use a metal ladder.
- Do not work on a wet or windy day.
- Do dress properly—wear shoes with rubber soles and heels, rubber gloves, and a long-sleeved shirt or jacket.

- If the assembly starts to drop, move away from it and let it fall. Because the antenna, mast, cable, and metal guy wires are all excellent conductors of electrical current, even the slightest touch of any of these parts to a power line completes an electrical path through the antenna and the installer.
- If any part of the antenna system should come in contact with a power line, do not touch it or try to remove it yourself. Call your local power company to have it removed safely.
- If an accident should occur with the power lines, call for qualified emergency help immediately.
- Assemble your new antenna on the ground or a level surface at the installation site.
- Connect its coaxial cable while you are on the ground and attach the antenna to the mast.
- Ensure that the mast does not fall as you raise or remove it. Use a durable non-conductive rope secured at each two foot level as the mast is raised. Have an assistant tend the rope, ready to pull the mast clear of any hazards (such as power lines) should it begin to fall.
- Use the mounting bracket provided with the antenna.
- If the installation will use guy wires:
  - Install guy anchor bolts.
  - Estimate the length of guy wire and cut it before raising the mast.
  - Attach guy wires to a mast using guy rings.
  - In the case of a guyed (tall, thin mast) installation, you must have at least one assistant to hold the mast upright while the guy wires are attached and tightened to the anchor bolts.
- Attach a “DANGER” label at eye level on the mast.
- Install ground rods to remove any static electricity buildup and connect a ground wire to the mast and ground rod. Use ground rods designed for that purpose, not a spare piece of pipe.

Unused Antenna Ports

Port plugs must be installed in any unused antenna ports.

The weatherproof caps on the connectors protect the router interior from environmental elements including water, heat, cold, and dust. They are installed on unused ports before the router is shipped.

When you install a new antenna in a port with an N-connector:

- Chassis-mounted antennas—Remove the weather proof cap before installing a chassis-mounted antenna.
- External antennas—Remove weatherproof cap, then connect the supported Cisco cable to the connector.

Guidelines to Achieving Optimal RF and Antenna Performance

Antennas are a critical component of a wireless communication system. Selecting a suitable antenna, an optimal antenna location, or antenna site is essential for optimum performance of a wireless links.

This section covers general tips for optimizing RF performance of indoor and outdoor terrestrial radio systems in the 400-7125 MHz frequency range. Examples of terrestrial radio systems include 4G LTE, 5G NR, Wi-Fi,

LoRa, LR-WPAN and similar. In this context GPS SPS would not be considered a terrestrial system as the signal is received from space, not from another terrestrial site.

Because the antenna transmits and receives radio signals over the air, overall RF performance of the link is susceptible to RF obstructions and common sources of RF interference that can reduce throughput and range of the system.

Follow these guidelines to optimize performance. When in doubt, consult a qualified RF professional, and check with your solution partner for specific recommendations.

Antenna Model Selection and Performance

Consider the following when planning your installation:

- When selecting the antenna, ensure that it covers the frequency ranges or frequency bands of interest, and that it has good RF parameters such as antenna efficiency, VSWR and suitable radiation pattern for every frequency range that your application will use with this antenna.
- Antenna pattern is important. Omni-directional antennas have lower gain, but allow communicating to devices in all azimuth directions. Directional antennas concentrate the beam in a specific direction, making them ideal for point to point communication.
- When a system has multiple RF ports for receive and / or transmit, as is the case for 4G LTE , 5G NR or Wi-Fi, it is highly recommended to populate all the RF ports with suitable antennas to take advantage of MIMO, rather than rely on a single port or single antenna to save on cost. Please see the MIMO section for a detailed description of MIMO benefits.
- For RF systems that support multiple RF ports and multiple RF standards such as LTE, Wi-Fi, and GPS: consider using a multi-element antenna that integrates multiple antennas under the same radome (cover). Doing so may reduce cost compared to deploying and mounting a discrete single port antenna for every RF port.
- For communication between fixed infrastructure devices, such as mesh nodes or a point-to-point backhaul link, each device should have an antenna with the same polarization. If communicating with mobile devices that might be randomly oriented, consider dual-polarized antennas, such as those with both vertical and horizontal or slant +45° and -45° polarized elements.

Antenna Environmental Specifications

The selected antenna must have suitable mechanical and environmental specifications for the environment where it will be deployed. For example, shock and vibration specifications for transportation, corrosion resistant construction for marine and oil and gas industries, or IP (ingress protection) rating for outdoor deployment. Indoor antennas are typically not suitable for harsh industrial environments. Please check with your system integrator for environmental requirements for your application.

Antenna Accessories and Mounting

Consider the following when planning your installation:

- Carefully consider what type of other RF accessories, besides antenna, such as RF cables, lightning arrestors or RF adapters may be required in your installations. It is best to minimize long RF cable runs due to RF signal losses in the cable. Thinner RF cables have more RF loss , thicker cables are less flexible and more expensive.

- Carefully consider how the antenna will be physically mounted, as this may affect antenna selection. For example, a stud mount mechanical mounting design is a better fit for mounting on top of an electrical cabinet than a mast mount antenna.
- For outdoor deployments, follow installation instructions for the antenna. It is good practice to keep protective covers on the radio's RF ports and any antenna or accessory RF ports until the moment the interfaces are mated. This reduces chances of contamination, trapping water or condensation inside the connector, or accidental damage to RF interfaces.

MIMO Performance and Arrays

MIMO systems deliver benefits of higher SNR, higher reliability and higher throughput compared to single antenna systems. In more technical terms, MIMO delivers array gain, diversity gain and multiplexing gain compared to single antenna.

- Array gain — Improvement in SNR (signal to noise ratio) by coherently combining signals from multiple antennas. For example, increasing SNR through beamforming techniques.
- Diversity gain — Improvement in reliability by mitigating deep fading or strong destructive EM wave interference. For example, in a two-antenna system, if one antenna is experiencing deep fading due to an EM destructive null at its location at a given instant, the other antenna is unlikely to have a null at the same instant, and the combined SNR stays at a reliable level. In contrast, a single antenna would see SNR oscillating between good SNR and very poor SNR and reliability would degrade.
- Multiplexing gain — Increase in system capacity or throughput by sending independent data over multiple spatial streams simultaneously. The number of streams cannot be more than the number of antennas. For example, to support three spatial streams, a minimum of three antennas is required. Often there may be additional antennas for diversity or redundancy, such as in the case of 4x4:3, or 4x4 MIMO with 3 spatial streams.

If deploying multiple single-element antennas for a MIMO system in an array, ensure sufficient spacing between the antennas. Omnidirectional elements should generally be at least one wavelength apart at the lowest operating frequency.

Consider the following:

- For Wi-Fi systems operating in the 2.4, 5, and/or 6 GHz bands, space elements at least 5 inches (12.5 cm) apart.
- For 4G LTE and 5G systems with the lowest operating frequency of 617 MHz , space elements at least 20 inches (50 cm) apart.
- Note that spacing between elements inside multi-element MIMO antennas is often less than one wavelength. However multi-element antennas are engineered with MIMO performance in mind, by providing antenna diversity through pattern, polarization, and isolation between MIMO elements.

Antenna siting and location

Consider the following when planning your installation:

- Plan antenna location ahead of time. Ideal location for an antenna is in LOS (line of sight) of the counterpart that it is trying to communicate with. Under LOS conditions the signals propagate directly between the two communication nodes, without relying on signal bouncing off a wall or other structure to reach the counterpart. This is sometimes not possible to achieve in practice, but it is a useful goal to keep in mind when optimizing antenna location.

- While it is good to keep RF cables short, it is most desirable for an antenna to be in the best location it can be to provide the desired coverage.
- For large deployments involving multiple units communicating with each other across a complex urban or industrial landscape, consider running an RF propagation modeling study to predict approximate simulated coverage maps and determine initial placement of the units. A propagation study may help reduce overall deployment cost by discovering and mitigating issues with RF coverage before the infrastructure is physically installed.
- Keep the antenna away from metal obstructions such as heating and air-conditioning ducts, large ceiling trusses, building superstructures, and major power cabling runs. One exception is if the antenna is designed to be mounted on a ground plane. If mounting on a ground plane, mount the antenna on a flat metal surface away from adjacent obstructions.
- It is strongly recommended not to install antennas directly on the router or access point (AP), unless the router or AP is specifically engineered to directly mount the antennas. Products that are engineered for direct mounting of antennas specifically address each of the below issues.
- Reasons to mount antennas away from the router include:
    - Router location may not be optimal location for antenna to communicate with the counterpart wirelessly, so router and antenna may need to be in different locations.
    - Router may have a clutter of Ethernet cable and power cables around it, which will obstruct antenna signal.
    - A number of routers, such as the IR1835, are modular. They have plug-in RF modules for Wi-Fi , 4G LTE or 5G NR such as WP-WIFI6, P-LTEAP18-GL, P-5GS6-GL. These modules have RF connectors spaced close together, and while it is mechanically possible to install four or five antennas directly attached, this will result in significant degradation to RF performance of antennas due to mutual de-tuning between closely spaced antennas. It is strongly recommended to install antennas away from the chassis in modular cases.
- If installing an antenna indoors, consider that the density and electromagnetic properties of the materials used in the building construction determines the number of walls the signal can pass through and still maintain adequate coverage.
    - Paper and vinyl walls have very little effect on signal penetration.
    - Solid and pre-cast concrete walls limit signal penetration to one or two walls without degrading coverage.
    - Concrete and wood block walls limit signal penetration to three or four walls.
    - A signal can penetrate five or six walls constructed of drywall or wood.
    - A thick metal wall causes signals to reflect off, causing poor penetration.
    - A chain link fence or wire mesh spaced between 1 and 1 1/2 in. (2.5 and 3.8 cm) acts as a harmonic reflector that blocks a 2.4-GHz radio signal.
    - Install the antenna away from microwave ovens and 2-GHz cordless phones. These products can cause signal interference because they operate in the same frequency range as the device your antenna is connected to.

Obtaining Technical Assistance

Cisco provides Cisco.com as a starting point for all technical assistance. Customers and partners can obtain documentation, troubleshooting tips, and sample configurations from online tools by using the Cisco Technical Assistance Center (TAC) Web Site. Cisco.com registered users have complete access to the technical support resources on the Cisco TAC Web Site.

Cisco.com is the foundation of a suite of interactive, network services that provides immediate, open access to Cisco information, networking solutions, services, programs, and resources at any time, from anywhere in the world.

Cisco.com is a highly integrated Internet application and a powerful, easy-to-use tool that provides a broad range of features and services to help you to:

- Streamline business processes and improve productivity
- Resolve technical issues with online support
- Download and test software packages
- Order Cisco learning materials and merchandise
- Register for online skill assessment, training, and certification programs

You can self-register on Cisco.com to obtain customized information and service. To access Cisco.com , go to the following URL: http://www.cisco.com

Additional Information

This section contains the following:

Antenna Information

For additional documentation, see the following:

- For information about CGR modules, see:

www.cisco.com/go/cg-modules

- For information on omnidirectional and directional antennas, see:

http://www.cisco.com/en/US/tech/tk722/tk809/technologies_tech_note09186a00807f34d3.shtml

- Connected Grid Antennas Installation Guide

http://www.cisco.com/c/en/us/td/docs/routers/connectedgrid/antennas/installing/cg_antenna_install_guide.html

- Cisco IW3702 Access Point Getting Started Guide

http://www.cisco.com/c/en/us/td/docs/wireless/outdoor_industrial/iw3702/hardware/install/guide/iw3702-gsg.html

Product Specific Guides for Industrial Routers

- Cisco 807 Industrial Integrated Services Routers
- Cisco 809 Industrial Integrated Services Routers
- Cisco 829 Industrial Integrated Services Routers
- Cisco IR1101 Industrial Integrated Services Routers
- Cisco 1120 Connected Grid Router
- Cisco 1240 Connected Grid Router
- Cisco 1000 Series Connected Grid Routers
- Cisco 500 Series WPAN Industrial Routers
- Cisco 900 Series Industrial Routers
- Cisco Industrial Wireless 3700 Series

Cisco General Information

- Access the most current Cisco documentation at:

http://www.cisco.com/cisco/web/support/index.html

- Access the Cisco website at:

http://www.cisco.com

- Access International Cisco web sites at:

http://www.cisco.com/public/countries_languages.shtml

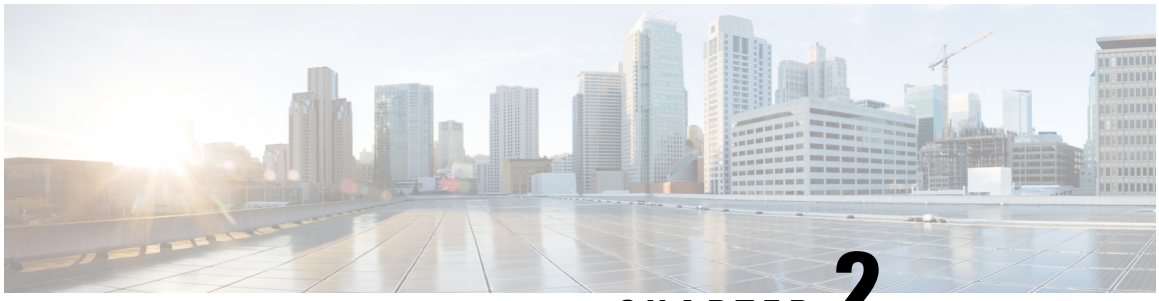

CHAPTER 2

Antenna Selection Table

This chapter contains the following:

- Antenna Selection Overview, on page 9
- Currently Supported Antennas, on page 9
- Cellular 2G/3G/4G/5G Antennas, on page 10
- Tri Band 2.4/5/6 GHz Antennas, on page 16
- GPS/GNSS Antennas, on page 17
- WPAN, ISM, and LoRaWan Antennas, on page 20
- Wi-Fi Antennas, on page 21
- Single Band 2.4 GHz Antennas, on page 21
- Single Band 5 GHz Antennas, on page 22
- Dual Band 2.4 GHz + 5 GHz Antennas, on page 22
- Industrial Wireless Access Point Antennas, on page 26
- Planned End Of Service (EOS) Antennas, on page 28
- End Of Service (EOS) Antennas, on page 30

Antenna Selection Overview

This section is designed to provide detailed information for each antenna that can be used for Cisco Industrial Routers and Industrial Wireless Access Points. This document also contains selection tables for the Cisco antennas and accessories, as well as basic compatibility information with Cisco Industrial Routers and Access Points Cisco antennas and accessories, as well as installation scenarios, and technical specifications and diagrams of the available antennas. Read all of the safety precautions before you begin installation.

Note In all cases throughout this guide, Indoor Enterprise products are not listed.

The following tables list the currently supported antennas, planned EOS, and EOS antennas for Cisco Industrial Routers and Industrial Wireless Access Points.

Currently Supported Antennas

These are the antennas that are currently fully supported for deployments.

All of the currently supported antennas are broken down by functional groups.

Cellular 2G/3G/4G/5G Antennas

Part Number / Description	RF Connectors	Antenna Frequency Band Support and Gain	Industrial Products Where Supported
Cisco 5-in-1 Vehicle Mount and Fixed Infrastructure Antenna (ANT-5-4G2WL2G1-O), on page 647 Transportation omnidirectional 5-element antenna for 2G, 3G, 4G cellular, GPS, and dual-band Wi-Fi 2.4 GHz and 5 GHz. Antenna has 2 ports for 2G, 3G, 4G, 2 ports for dual band 2.4 / 5.8 GHz Wi-Fi, and 1 port for GPS.	2 x 4G LTE, TNC(m) 2 x 2.4/5 GHz Wi-Fi, RPTNC(plug) 1 x GPS SMA(m)	4G LTE 698-960, 1448-1511, 1710-2400, 2500-2700 MHz. 2.4 dBi typical, 2.9 dBi max 698-960 MHz 4.2 dBi typical, 4.8 dBi max 1448-1511 MHz 4.9 dBi typical, 6.5 dBi max 1710-2700 MHz	Good fit for IR829. Can be used with other products such as IR809 or IR807, but has extra Wi-Fi elements not required for those products. Instead consider ANT-3-4G2G1-O for products without Wi-Fi.
Cisco Cellular and GPS 3-in-1 Vehicle Mount and Fixed Infrastructure Antenna (ANT-3-4G2G1-O), on page 519 Cellular 3-in-1 Two port 2G, 3G, 4G and 1 port GPS Vehicle Mount and Fixed Infrastructure Antenna, with three ports.	2 x 4G LTE, TNC(m) 1 x GPS SMA(m)	4G LTE 698-960, 1448-1511, 1710-2400, 2500-2700 MHz 2.6 dBi typical, 3.8 dBi max 698-960 MHz 3.8 dBi typical, 4.3 dBi max 1448-1551 MHz 4.6 dBi typical, 5.5 dBi max 1710-2700 MHz	IR807, IR809, and IR829 IR1101 with P-LTE cellular module C819HG-LTE and C819HG-4G CGM-3G and CGM-4G modules with CGR1120 router CGR1120 use case requires adapters
Cisco Dual LTE-Single GPS Multi-band Antenna Installation Guide (4G-LTE-ANTM-O-3-B), on page 97 Cellular 3-in-1 Two port for 2G, 3G, 4G LTE and one port for GPS Integrated indoor and outdoor Antenna with three ports.	2 x 4G LTE, TNC(m) 1 x GPS SMA(f)	4G LTE 698-960, 1710-2700 MHz 2.5 dBi typical 698-960 MHz 2.5 dBi typical 1710-2700 MHz	IR1101 with P-LTE cellular module

Part Number / Description	RF Connectors	Antenna Frequency Band Support and Gain	Industrial Products Where Supported
Cisco Cellular 2-in-1 Vehicle Mount and Fixed Infrastructure Antenna (ANT-2-4G2-O), on page 487 Two port 2G, 3G, and 4G antenna with two elements. This dual port LTE antenna does not have an active GPS antenna (compared to ANT-3-4G2G1-O which does), and is useful for cases when there is no GPS required, or when GPS is connected to a completely separate GPS antenna.	2 x 4G LTE, TNC(m)	4G LTE: 698-960,1448-1511,1710-2400,2500-2700 MHz 2.6 dBi typical, 3.8 dBi max 698-960 MHz 3.8 dBi typical, 4.3 dBi max 1448-1511 MHz 4.6 dBi typical, 5.5 dBi max 1710-2700 MHz No GPS element and no Wi-Fi.	IR807, IR809, and IR829 IR1101 with P-LTE cellular module C819HG-LTE and C819HG-4G CGM-3G and CGM-4G modules with CGR1120 router. CGR1120 use case requires coax adapters
Cisco Outdoor Omnidirectional Antenna for 2G/3G/4G Cellular (ANT-4G-OMNI-OUT-N), on page 575 Outdoor Omnidirectional Antenna for 2G/3G/4G Cellular antenna is designed to cover domestic LTE700/Cellular/PCS/AWS/MDS, WiMAX 2300/2500, and GSM900/GSM1800/UMTS/LTE2600 bands.	N-Type female	698 to 862 MHz 824 to 894MHz 880 to 960MHz 1710 to 1880Mhz 1850 to 1990MHz 1920 to 2170MHz 2300 to 2400MHz 2400 to 2500MHz 2500 to 2690MHz 3400 to 3800 MHz 1.5 dBi (698 to 960MHz) 3.5 dBi (1710 to 2690MHz) 5.2 dBi (3400 to 3800MHz)	IR807, IR809, and IR829 IR1101 with P-LTE cellular module C819HG-LTE and C819HG-4G CGM-3G and CGM-4G modules with CGR1120 and CGR1240. In most cases adapters or cables are required.
Cisco Multiband Panel Outdoor 4G MIMO Antenna (ANT-4G-PNL-OUT-N), on page 591 Multiband Panel Outdoor 4G MIMO dual-port antenna designed to cover cellular 4G bands.	Dual type N female direct connector	698-960 MHz 8.0-10.0 dBi 1710-2170 MHz 6.0-8.5 dBi 2200-2400 MHz 6.5-9.5 dBi 2500-2700 MHz 8.5-9.5 dBi Antenna is not designed to operate in 1448-1511 MHz Japan band. Does not have high gain.	IR807, IR809, and IR829 IR1101 with P-LTE cellular module C819HG-LTE and C819HG-4G CGM-3G and CGM-4G modules with CGR1120 and CGR1240. In most cases adapters or cables are required.

Part Number / Description	RF Connectors	Antenna Frequency Band Support and Gain	Industrial Products Where Supported
Cisco Multiband Indoor 4G Volcano Antenna (ANT-4G-CM-IN-TNC), on page 551 Multiband Indoor 4G Ceiling-mount Volcano Antenna.	1 x TNC (m)	1 dBi 698-960 MHz 3 dBi 1710-2700 MHz	IR807, IR809, and IR829 C819HG-LTE and C819HG-4G CGM-3G and CGM-4G modules with CGR1120 and CGR1240. For CGM / CGR use case adapters are required
ANT-MP2-I-OUT-M and ANT-MP2-I-O-SS-M Antenna and Cable Kits, on page 763 For 4G cellular use you need the ANT-MP2-I-O-SS-M antenna kit. The kit has qty 2 antennas and cables needed for Main and Aux cellular ports. ANT-MP2-I-OUT-M is for 915 MHz WPAN, and only has a single antenna and cable in the kit. Designed for direct mounting on the CGR1240 and has an MCX connector.	MCX jack	0.9 dBi typical, 2.8 dBi max 698-960 MHz 3.0 dBi typical, 4.3 dBi max 1710-2700 MHz 4.0 dBi typical, 5.0 dBi max 2300-2700 MHz **Note** Degraded performance in Japan 1448-1511 MHz band.	ANT-MP2-I-O-SS-M kit is compatible with CGM-3G and CGM-4G in CGR1240 chassis. The antennas are not mechanically compatible with the CGR1120 chassis.
Cisco Integrated 4G Low-profile Outdoor Saucer Antenna (ANT-4G-SR-OUT-TNC), on page 617 Integrated 4G Low-profile Outdoor Saucer Antenna.	15 foot LMR 195 cable with TNC(m)	0.8 dBi 698-960 MHz 0.5 dBi 1448-1511 MHz 0.2 dBi 1710-2700 MHz	IR807, IR809, and IR829 C819HG-LTE and C819HG-4G CGM-3G and CGM-4G modules with CGR1120 and CGR1240. For CGM / CGR use case adapters are required.

Part Number / Description	RF Connectors	Antenna Frequency Band Support and Gain	Industrial Products Where Supported
Cisco 4G/3G Omnidirectional Dipole Antenna (4G-LTE-ANTM-D), on page 83 LTE-ANTM-D is a high performance indoor antenna for use in the 698-960, 1448-1511 and 1710-2690 MHz frequency bands. LTE-ANTM-D antennas have high standalone efficiency, and maintain high efficiency when directly installed on front plate of a small or medium size Cisco router. However, depending on chassis size and a variety of other electromagnetic considerations, installing the antenna directly on the chassis is not always recommended.	1 x TNC(m)	2 dBi, 698-960 MHz 2.8 dBi, 1447-1511 MHz 3.7 dBi, 1710-2690 MHz	IR807, IR809, and IR829 C819HG-LTE and C819HG-4G CGM-3G and CGM-4G modules in CGR1120 (with additional adapters & cable accessories)
Cisco 4G LTEA, 4G LTE, and 3G Omnidirectional Dipole Antenna (LTE-ANTM-SMA-D), on page 981 LTE-ANTM-SMA-D is a high performance indoor antenna for use in the 698-960, 1448-1511 and 1710-2690 MHz frequency bands. LTE-ANTM-SMA-D antennas have high standalone efficiency, and maintain high efficiency when directly installed on front plate of a small or medium size Cisco router. However, depending on chassis size and a variety of other electromagnetic considerations, installing the antenna directly on the chassis is not always recommended.	1 x SMA(m)	2 dBi, 698-960 MHz 2.8 dBi, 1447-1511 MHz 3.7 dBi, 1710-2690 MHz	IR1101 with P-LTE cellular module

Part Number / Description	RF Connectors	Antenna Frequency Band Support and Gain	Industrial Products Where Supported
Cisco 4G LTEA, 4G LTE, and 3G Omnidirectional Dipole Antenna (LTE-ANTM2-SMA-D), on page 997 LTE-ANTM2-D is a high-performance indoor antenna used for 617-960, 1400- 2690, 3400-3900 and 5150-6000 MHz deployments. LTE-ANTM2-D antennas have high standalone efficiency, and maintain high efficiency when directly installed on front plate of a small or medium size Cisco router. However, depending on chassis size and a variety of other electromagnetic considerations, installing the antenna directly on the chassis is not always recommended.	1 x SMA(m)	1.0 dBi (typical), 617 – 960 MHz 4.0 dBi (typical), 1400 – 2690 MHz 4.5 dBi (typical), 3400 – 3900 MHz 5.0 dBi (typical), 5150 – 6000 MHz	IR21, IR31, 1101, IR1800, IR8300
Cisco 4G (LTE) / 5G (FR1) Omnidirectional Outdoor Antenna (ANT-5G-OMNI-OUT-N), on page 473 Outdoor omnidirectional antenna for 3G/4G/5G cellular deployments.	N-type (f)	2.5 dBi (typical), 617 – 960 MHz 4.0 dBi (typical), 1400 – 4200 MHz 4.5 dBi (typical), 4400 – 7125 MHz **Note** Supports operation in LTE Japan bands (1400 – 1520 MHz)	IR21, IR31 IR1101, IR1800, IR8300 with P-LTE/LTEA/5G cellular modem IR8100 with UIM LTE/LTEA/5G cellular module
Cisco ANT-5G-MP-OUT-N, on page 439 Omnidirectional Outdoor Antenna.	N-type (m)	2.0 dBi (typical), 617 – 960 MHz 5.5 dBi (typical), 1700 - 5925 MHz **Note** Does not support operation in LTE Japan bands (1400 – 1520 MHz)	IR8100 with UIM WPAN/LTE/LTEA/5G cellular module

Part Number / Description	RF Connectors	Antenna Frequency Band Support and Gain	Industrial Products Where Supported
Cisco 4-in-1 Fixed Infrastructure Antenna w/bracket (ANT-4-5G4-O), on page 457 Cisco 4-in-1 Fixed Infrastructure Antenna with bracket.	4 x N-type (m)	3G/4G/5G FR1 617-960/1710-2170/2300-2700/3300-3800/4900-5925 MHz 0.8 dBi (typical), 617-960 MHz 2.0 dBi (typical), 1710-2170 MHz 3.7 dBi (typical), 2300-2700 MHz 2.8 dBi (typical), 3300-3800 MHz 1.0 dBi (typical), 4900-5925 MHz **Note** Does not support operation in LTE Japan bands (1400 – 1520 MHz)	IR8100H Includes mounting bracket Recommended for Cat18 UIM deployment in IR8100 series
Cisco Multi-element, 5-in-1, 5G (FR1)/LTE/GNSS (ANT-5-5G4G1-O)	4x Cellular (4G/5G) SMA(m) 1x GNSS SMA(m)	4x cellular ports: 617-960/1710-5925 MHz 5G (LTE), Dual Band Average peak gain: • 617-960 MHz: 2.0 dBi • 1710-5925 MHz: 5.8 dBi	To be used with products that support the 5G Pluggable - P-5GS6-GL.
Cisco 7-in-1 Vehicle Mount and Fixed Infrastructure Antenna (ANT-7-5G4WL2G1-O), on page 667 Transportation omnidirectional 7-element antenna for 3G, 4G, 5G FR1, GNSS and dual-band Wi-Fi (2.4/5GHz) deployments.	4x 4G/5G, SMA(m) 2x 2.4/5GHz Wi-Fi, RP-SMA(plug) 1x GNSS, SMA(m)	3G/4G/5G FR1 617-960/1710-2340/2400-2800/3300-3800/5100-6000 MHz Dual-band Wi-Fi (2.4/5GHz) 2400-2480/5100-5950 MHz GNSS 1560-1605 MHz	IR1800, IR8300 Can be used with products like IR1101 but has extra Wi-Fi elements not required for said product. Consider other multi-element antennas with corresponding adapters/extension cables

Part Number / Description	RF Connectors	Antenna Frequency Band Support and Gain	Industrial Products Where Supported
Cisco Multi-element, 9-in-1, LTE/Wi-Fi/GNSS antenna (5G-ANTM-O-4-B), on page 117 Transportation omnidirectional 9-element antenna for 3G, 4G, 5G FR1, GNSS and dual-band Wi-Fi (2.4/5GHz) deployments.	4x 4G/5G, SMA(m) 4x 2.4/5GHz Wi-Fi, RP-SMA(plug) 1x GNSS, SMA(m)	3G/4G/5G FR1 617-960/1710-2340/2400-2800/3300-3800/5100-6000 MHz Dual-band Wi-Fi (2.4/5 GHz) 2400-2480/5100-5950 MHz GNSS 1560-1605 MHz	IR1800, IR8300 Can be used with products like IR1101 but has extra Wi-Fi elements not required for said product. Consider other multi-element antennas with corresponding adapters/extension cables
Cisco Multi-Band Swivel Mount Dipole Antenna (5G-ANTM-SMA-D), on page 163 Indoor Omnidirectional Dipole Antenna	1 x SMA(m)	3G/4G/5G FR1 617-960/1710-2340/2400-2800/3300-3800/5100-6000 MHz 3.1 dBi (typical), 617 – 960 MHz 4.0 dBi (typical), 1400 – 2690 MHz 4.5 dBi (typical), 3400 – 3800 MHz 4.5 dBi (typical), 5150 – 5925 MHz	IR1100, IR1800, IR8300

Tri Band 2.4/5/6 GHz Antennas

Part Number / Description	RF Connectors	Antenna Frequency Band Support and Gain	Industrial Products Where Supported
Cisco 2.4/5/6 GHz Tri-Band Omnidirectional Antenna (IW-ANT-OMH-2567-N), on page 851	Integrated Male N(m)	6 dBi Peak @2400-2482 MHz 8 dBi Peak @4900-4990 MHz 8 dBi Peak @5170-5330 MHz 8 dBi Peak @5490-6875 MHz	IW9167
Cisco 2.4/5/6 GHz Tri-Band Omnidirectional Antenna (IW-ANT-OMV-2567-N), on page 857	Integrated Male N(m)	6 dBi Peak @2400-2482 MHz 8 dBi Peak @4900-4990 MHz 8 dBi Peak @5170-5330 MHz 8 dBi Peak @5490-6875 MHz	IW9167

GPS/GNSS Antennas

Part Number / Description	RF Connectors	Antenna Frequency Band Support and Gain	Industrial Products Where Suppor
Cisco GPS Antenna (ANT-GPS-OUT-TNC), on page 709 Active GPS antenna, integrated 15' LMR-100 cable with RA-TNC(male). The ANT-GPS-OUT-TNC integrated GPS RF front end is designed to reject collocated RF interference.	Right-angle TNC male	Active GPS antenna, 4.0 dBi min at Zenith, 1575.42 MHz, plus 25dB amplifier gain	CGR1120 router use case requires ANT-ADPTR-Q-TNC adapter. Ro QMA(f) GPS connector LoRaWAN gateways, IXM-LPWA-800-16-K9IXM-LPW directly attached. No adapter need products have TNC(f) GPS conne IR510 use case requires LTE-ADF adapter. IR510 has SMA(f) GPS c IR1101 with P-LTE cellular modu C819HG-LTE and C819HG-4G IR807, IR809, and IR829 All of these use cases require a LTE-ADPT-SM-TF adapter as thes a SMA(f) GPS connector. Instead of a standalone ANT-GPS antenna please consider using a m antenna that combines LTE and G in a single antenna product such a ANT-5-4G2WL2G1-O or ANT-3-
Cisco Indoor/Outdoor Active GPS Antenna (GPS-ACT-ANTM-SMA), on page 841 Active GPS antenna that can be physically connected to the Cisco Integrated Services Routers (ISRs) and Cisco Enhanced High-Speed WAN Interface Cards (EHWICs) to receive GPS broadcasts from satellites. GPS-ACT-ANTM-SMA has GPS filters, but all the filters are after the LNA. Therefore, antenna may not be suitable for co-location with strong RF transmitters.	SMA male	Active GPS antenna, 4 dBi Zenith, 1575.42 MHz, plus 27dB amplifier gain	IR807, IR809, and IR829 IR1101 with P-LTE cellular modu C819HG-LTE and C819HG-4G

Part Number / Description	RF Connectors	Antenna Frequency Band Support and Gain	Industrial Products Where Supported
Cisco indoor/outdoor, active GNSS antenna (IW-ANT-GNSS-SMA), on page 873 indoor/outdoor, active GNSS antenna which can be physically connected to the Cisco Integrated Services Routers (ISRs) and Cisco Industrial Wireless (IW) Access Points and Clients to receive GNSS broadcasts from satellites.	SMA male	Active GPS antenna, 1559 – 1610 MHz, 26 dB, +/- 2 dB Amplifier Gain (LNA Gain)	IW9165E
Cisco Dual LTE-Single GPS Multi-band Antenna Installation Guide (4G-LTE-ANTM-O-3-B), on page 97 Cellular 3-in-1 Two port for 2G, 3G, 4G LTE and one port for GPS Integrated indoor and outdoor Antenna with three ports. The 4G-LTE-ANTM-O-3-B integrated GPS RF front end is designed to reject collocated RF interference.	SMA-Male	2.5 dBi typical 698-960 MHz 2.5 dBi typical 1710-2700 MHz One port with GPS element.	IR1101 with P-LTE cellular module
Cisco Cellular and GPS 3-in-1 Vehicle Mount and Fixed Infrastructure Antenna (ANT-3-4G2G1-O), on page 519 Three port antenna with two elements designed to cover the 698-960, 1448-1511 and 1710-2700 MHz cellular bands and one GPS element. The ANT-3-4G2G1-O antenna is listed under multiple antenna guide sections due to support of multiple technologies. The ANT-3-4G2G1-O integrated GPS RF front end is designed to reject collocated RF interference.	Cellular – TNC male GPS – SMA male	3G/4G 1 dBi zenith, plus 27dB amplifier gain Active GPS antenna, 1575.42 +/- 5 MHz	IR807, IR809, and IR829IR1101 with cellular module C819HG-LTE and C819HG-4G CGM-3G and CGM-4G modules with router CGR1120 use case requires ANT-ADPTR-Q-TNC adapters, as C router has a QMA(f) GPS connector, CGM-3G and CGM-4G modules hav cellular connectors

Part Number / Description	RF Connectors	Antenna Frequency Band Support and Gain	Industrial Products Where Suppo
Cisco Multi-element, 5-in-1, 5G (FR1)/LTE/GNSS (ANT-5-5G4G1-O)	4x Cellular (4G/5G) SMA(m) 1x GNSS SMA(m)	4x cellular ports: 617-960/1710-5925 MHz 5G (LTE), Dual Band Average peak gain: • 617-960 MHz: 2.0 dBi • 1710-5925 MHz: 5.8 dBi	To be used with products that supp Pluggable - P-5GS6-GL.
Cisco 5-in-1 Vehicle Mount and Fixed Infrastructure Antenna (ANT-5-4G2WL2G1-O), on page 647 Transportation omnidirectional 5-element antenna for 2G, 3G, 4G cellular, GPS, and dual-band WiFi 2.4 GHz and 5 GHz. The ANT-5-4G2WL2G1-O integrated GPS RF front end is designed to reject collocated RF interference. **Note** The ANT-5-4G2WL2G1-O antenna is listed under multiple antenna guide sections due to support of multiple technologies.	Cellular – TNC male WLAN - RP-TNC male GPS – SMA male	3G/4G 4G LTE 698-960, 1448-1511, 1710-2400, 2500-2700 MHz 1 dBi zenith, plus 27dB amplifier gain Plus 1 port GPS, and 2 ports for dual band WiFi. 1575.42 +/- 1 MHz, GPS L1	Good fit for IR829. Can be used with other products s or IR807, but has extra WiFi elem required for those products. Instead consider ANT-3-4G2G1-O without WiFi.
Cisco 7-in-1 Vehicle Mount and Fixed Infrastructure Antenna (ANT-7-5G4WL2G1-O), on page 667 Transportation omnidirectional 7-element antenna for 3G, 4G, 5G FR1, GNSS and dual-band Wi-Fi (2.4/5GHz) deployments.	4x 4G/5G, SMA(m) 2x 2.4/5GHz Wi-Fi, RP-SMA(plug) 1x GNSS, SMA(m)	3G/4G/5G FR1 617-960/1710-2340/2400-2800/3300-3800/5100-6000 MHz Dual-band Wi-Fi (2.4/5GHz) 2400-2480/5100-5950 MHz GNSS 1560-1605 MHz	IR1800, IR8300 Can be used with products like IR extra Wi-Fi elements not required product. Consider other multi-element ante corresponding adapters/extension
Cisco Multi-element, 9-in-1, LTE/Wi-Fi/GNSS antenna (5G-ANTM-O-4-B), on page 117 Transportation omnidirectional 9-element antenna for 3G, 4G, 5G FR1, GNSS and dual-band Wi-Fi (2.4/5GHz) deployments.	4x 4G/5G, SMA(m) 4x 2.4/5GHz Wi-Fi, RP-SMA(plug) 1x GNSS, SMA(m)	3G/4G/5G FR1 617-960/1710-2340/2400-2800/3300-3800/5100-6000 MHz Dual-band Wi-Fi (2.4/5GHz) 2400-2480/5100-5950 MHz GNSS 1560-1605 MHz	IR1800, IR8300 Can be used with products like IR extra Wi-Fi elements not required product. Consider other multi-element ante corresponding adapters/extension

WPAN, ISM, and LoRaWan Antennas

Part Number / Description	RF Connectors	Antenna Frequency Band Support and Gain	Industrial Products Where Supported
Cisco Outdoor 5 dBI Omni Antenna for 863-928 MHz WPAN, LoRaWan, and ISM (ANT-LPWA-DB-O-N-5), on page 721 5 dBi Outdoor Omni-directional Antenna for the Cisco WPAN, LoRaWan, ISM modules and routers.	Type N Female	5.2 dBi 860-876 MHz 5.3 dBi 902-928 MHz	IR509, IR510, IR529, and IR530 WPAN CGM-WPAN-FSK-NA and CGM-WPAN-OFDM-FCC modules in CGR1240 and CGR1120 LoRaWAN gateways, IXM-LPWA-800-16-K9 IXM-LPWA-900-16-K9
Cisco WPAN Dipole Antenna (ANT-WPAN-OD-OUT-N), on page 797 Omnidirectional, vertically polarized single-port antenna designed to cover the 860-928 MHz frequency bands for worldwide ISM operation.	Type N male	WPAN 860-928 MHz. 1.5 dBi max	IR509, IR510, IR529, and IR530 WPAN CGM-WPAN-FSK-NA and CGM-WPAN-OFDM-FCC modules in CGR1240 and CGR1120
Cisco Vandal Resistant Omni-directional Dome Antenna for 860-928 MHz ISM, WPAN and LoRaWAN (ANT-UN-MP-OUT-QMA), on page 779 Vandal Resistant Omni-directional Dome Antenna for ISM, WPAN and LoRaWAN routers.	QMA (male), right angle	1.5-2.0 dBi typical 860-928 MHz	IR509 and IR510
Cisco WPAN Yagi Antenna (ANT-WPAN-Y-OUT-N), on page 821 Directional, linearly polarized, mast mount Yagi antenna with a pigtail with N female connector.	18” RG8 pigtail with N female connector	WPAN 860-928 MHz. 9 dBi typical, 10 dBi max	Advanced Range Extenders only. IR529UBWP-915D/K9 and IR529UWP-915D/K9 only.
ANT-MP2-I-OUT-M and ANT-MP2-I-O-SS-M Antenna and Cable Kits, on page 763 For 4G cellular use you need the ANT-MP2-I-O-SS-M antenna kit. The kit has qty 2 antennas and cables needed for Main and Aux cellular ports. ANT-MP2-I-OUT-M is for 915 MHz WPAN, and only has a single antenna and cable in the kit. Designed for direct mounting on the CGR1240 and has an MCX connector.	MCX jack	0.9 dBi typical, 2.8 dBi max, 860-928 MHz	CGR1240 Connected Grid Modules ANT-MP2-I-OUT-M kit is compatible with CGM WPAN modules for use with CGR1240 chassis. The antennas are not mechanically compatible with the CGR1120 chassis.

Wi-Fi Antennas

Note Cisco has the broadest selection of Wi-Fi antennas in the industry. Not all combinations of antennas and routers are supported or tested. For detailed information about antennas supported please check the documentation available for your router or access point

For easier reference, this guide splits the Wi-Fi Antennas into 3 different categories:

- Single Band 2.4 GHz Antennas, on page 21
- Single Band 5 GHz Antennas, on page 22
- Dual Band 2.4 GHz + 5 GHz Antennas, on page 22

In addition to the information found in this guide, another detailed source for Cisco Wi-Fi antennas, Access Points and deployment considerations can be found here:

Cisco Aironet Antennas and Accessories Reference Guide

Single Band 2.4 GHz Antennas

Part Number / Description	RF Connectors	Antenna Frequency Band Support and Gain	Industrial Products Where Supported
Cisco Aironet 2.4 GHz 13-dBi Directional Antenna (AIR-ANT2413P2M-N), on page 181 2-Element Patch Array designed for outdoor use with Cisco Industrial Wireless Access Points.	Type N Male	WiFi 2.4 Ghz 13 dBi	IW3702 in FlexPort mode only IW3702 use case requires N-type cables. Supported on the IR829GW family, not recommended for the IR829-2LTE as the antenna is single band. IR829 use case requires cables and adapters. IW-6300, ESW-6300 IW/ESW-6300 must be configured in single band mode. Requires N-type cables.
Cisco Aironet 8-dBi Omnidirectional Antenna (AIR-ANT5180V-N), on page 427 Omnidirectional antenna designed for outdoor use.	Type N Male	WiFi 2.4 GHz 8 dBi	IW-6300, ESW-6300 IW/ESW-6300 must be configured in single band mode.

Single Band 5 GHz Antennas

Part Number / Description	RF Connectors	Antenna Frequency Band Support and Gain	Industrial Products Where Supported
Cisco Aironet 5-GHz 13-dBi Directional Antenna (AIR-ANT5114P2M-N), on page 399 2-Port Directional antenna with N-type connectors designed for use in outdoor environments.	Type N Male	Wi-Fi 5 GHz 13 dBi	IW3702 in FlexPort mode only IW3702 use case requires N-type cables. Supported on the IR829GW family, not recommended for the IR829-2LTE as the antenna is single band. IR829 use case requires cables and adapters. IW-6300, ESW-6300 IW/ESW-6300 must be configured in single band mode. Requires N-type cables.
Cisco Aironet 8-dBi Omnidirectional Antenna (AIR-ANT5180V-N), on page 427 Omnidirectional antenna designed for outdoor use.	Type N Male	Wi-Fi 5 GHz 8 dBi	IW-6300, ESW-6300 IW/ESW-6300 must be configured in single band mode

Dual Band 2.4 GHz + 5 GHz Antennas

Part Number / Description	RF Connectors	Antenna Frequency Band Support and Gain	Industrial Products Where Supported
Cisco Dual Port, Dual Band Vehicle Mount and Fixed Infrastructure WLAN Antenna (ANT-2-WLAN-D-O), on page 503 Dual Port, Dual Band Outdoor Vehicle Mount and Fixed Infrastructure WLAN Antenna, omnidirectional, vertically polarized, 2x2 MIMO, integrated 3 foot long LMR-240 cables with RP-TNC plug connectors.	2 x 3 foot LMR-240 cables with RP-TNC(plug) connectors	Wi-Fi 2.4/5 GHz 4.0 dBi typical, 5.1 dBi max 2400-2500 MHz 6.5 dBi typical, 7.0 dBi max 4900-5875 MHz	IR829

Part Number / Description	RF Connectors	Antenna Frequency Band Support and Gain	Industrial Products Where Supported
Cisco Aironet Four-Port Dual-Band Polarization-Diverse Antenna (AIR-ANT2513P4M-N), on page 243 Four-port polarization-diverse patch array with an articulating mount for use on flat surfaces and masts, and is adjustable in both the horizontal and vertical planes. Designed for use in indoor and outdoor environments.	Type N-Female Bulkhead	Wi-Fi 2.4/5 GHz 13 dBi	IW3702, IW-6300, ESW-6300 Requires N-type cables
Cisco Aironet Four-Element, MIMO, Dual-Band Ceiling Mount Omni-Directional Antenna (AIR-ANT2524V4C-R), on page 267 Four-element, dual-band antenna designed for ceiling-mounting in an indoor environment.	RP-TNC	Wi-Fi 2.4 GHz band: 2 dBi 5 GHz band: 4 dBi	IW3702 IW3702 use case requires AIR-ACC370-NM-RF coaxial adapters
Cisco Aironet Dual-Band MIMO Wall-Mounted Omnidirectional Antenna (AIR-ANT2544V4M-R), on page 295 Four port dual-band wall-mounted omnidirectional antenna designed for indoor or outdoor use.	RP-TNC	Wi-Fi 2.4 GHz band: 4 dBi 5 GHz band: 4 dBi	IW3702 IW3702 use case requires AIR-ACC370-NM-RF coaxial adapters
Cisco Aironet Dual-Band Omni-Directional Antenna (AIR-ANT2547V-N, AIR-ANT2547V-N-HZ, and ANT2547VG-N), on page 319 Single port dual-band omni-directional antenna designed to directly attach to an outdoor access point or bulkhead N female connector.	Type N-Male	Wi-Fi 4 dBi 2400–2483 MHz 7 dBi 5250–5875 MHz	IW3702, IW-6300, ESW-6300 IR829 IR829 use case requires cables and adapters.
Cisco Aironet 2.4-GHz/5-GHz MIMO 4-Element Patch Antenna (AIR-ANT2566P4W-R), on page 355 4-Element Patch Antenna designed for indoor and outdoor use.	RP-TNC	Wi-Fi 2.4/5 GHz 6 dBi in both bands	IW3702 IW3702 use case requires AIR-ACC370-NM-RF coaxial adapters

Part Number / Description	RF Connectors	Antenna Frequency Band Support and Gain	Industrial Products Where Supported
Cisco 5-in-1 Vehicle Mount and Fixed Infrastructure Antenna (ANT-5-4G2WL2G1-O), on page 647 Transportation omnidirectional 5-element antenna for 2G, 3G, 4G cellular, GPS, and dual-band Wi-Fi 2.4 GHz and 5 GHz. **Note** The ANT-5-4G2WL2G1-O antenna is listed under multiple antenna guide sections due to support of multiple technologies.	Cellular – TNC male WLAN - RP-TNC male GPS – SMA male	3G/4G 2 ports with dual band Wi-Fi 2.4/5 GHz. 1 port GPS, and 2 ports for 700-2700 MHz cellular. 4.8 dBi typical, 5.5 dBi max, 2400-2500 MHz 5.8 dBi typical, 7.0 dBi max, 4900-5875 MHz	IR829
Cisco Aironet Four-Element, MIMO, Dual-Band Ceiling Mount Omni-Directional Antenna (AIR-ANT2524V4C-R), on page 267 High-performance, dual-band dipole antenna designed for use with Cisco Aironet 2.4 GHz and 5 GHz radio products with dual-band reverse-polarity TNC (RP-TNC) antenna ports.	RP-TNC plug	Wi-Fi 2.4/5GHz 2 dBi 2.4 GHz 4 dBi 5. GHz	IW3702 IW3702 use case requires AIR-ACC370-NM-RF coaxial adapters Matching antenna color is the white AIR-ANT2524DW-R IR829 Matching antenna color is the black AIR-ANT2524DB-R
Cisco Aironet 2.4 GHz and 5 GHz Dual-Band Polarization-Diverse Directional Array Antenna (AIR-ANT2566D4M-R), on page 333 Four port dual-band polarization-diverse directional array antenna. It operates over the 2.4 GHz and 5 GHz Wi-Fi bands. It ships with an articulating mount for use on flat surfaces and masts, and is adjustable in both horizontal and vertical planes.	RP-TNC (with coupling ring)	2.4 GHz and 5 GHz 6 dBi	IW3702 IW3702 use case requires AIR-ACC370-NM-RF coaxial adapters IR829

Part Number / Description	RF Connectors	Antenna Frequency Band Support and Gain	Industrial Products Where Supported
Cisco Aironet Dual-Band Omni-Directional Antenna (AIR-ANT2568VG-N), on page 367 Single port dual-band omnidirectional antenna designed to directly attach to an outdoor access point or bulkhead N female connector.	Type N-Male	2.4/5 GHz 6 dBi 2400 – 2483 MHz 8 dBi 5150 – 5925 MHz	IW-6300, ESW-6300
Cisco Aironet 2.4-GHz/5-GHz 8-dBi Directional Antenna (AIR-ANT2588P3M-N), on page 379 Three port directional patch array with an articulating mount for use on flat surfaces and masts and is adjustable in both the horizontal and vertical planes. Designed for use in indoor and outdoor environments.	Type N-Female Bulkhead	2.4/5 GHz 8 dBi in both bands	IW-6300, ESW-6300 IW/ESW-6300 must be configured in dual-band mode. The middle port of the antenna is unused. Requires N-type cables.
Cisco Indoor, Dipole Antenna, single-port (W-ANTM2050D-RPSMA), on page 1019 W-ANTM2050D-RPSMA is a high-performance indoor antenna used for WLAN dual-band, 2.4/5GHz, indoor deployments. W-ANTM2050D-RPSMA antennas have high standalone efficiency, and maintain high efficiency when directly installed on front plate of a small or medium size Cisco router. However, depending on chassis size and a variety of other electromagnetic considerations, installing the antenna directly on the chassis is not always recommended.	1 x RP-SMA(m)	1.5 dBi (max), 2400 – 2482 MHz 3.5 dBi (max), 5100 – 5925 MHz	IR21, IR31, IR1800

Part Number / Description	RF Connectors	Antenna Frequency Band Support and Gain	Industrial Products Where Supported
Cisco 7-in-1 Vehicle Mount and Fixed Infrastructure Antenna (ANT-7-5G4WL2G1-O), on page 667 Transportation omnidirectional 7-element antenna for 3G, 4G, 5G FR1, GNSS and dual-band Wi-Fi (2.4/5GHz) deployments.	4x 4G/5G, SMA(m) 2x 2.4/5GHz Wi-Fi, RP-SMA(plug) 1x GNSS, SMA(m)	3G/4G/5G FR1 617-960/1710-2340/2400-2800/3300-3800/5100-6000 MHz Dual-band Wi-Fi (2.4/5GHz) 2400-2480/5100-5950 MHz GNSS 1560-1605 MHz	IR1800, IR8300 Can be used with products like IR1101 but has extra Wi-Fi elements not required for said product. Consider other multi-element antennas with corresponding adapters/extension cables
Cisco Multi-element, 9-in-1, LTE/Wi-Fi/GNSS antenna (5G-ANTM-O-4-B), on page 117 Transportation omnidirectional 9-element antenna for 3G, 4G, 5G FR1, GNSS and dual-band Wi-Fi (2.4/5GHz) deployments.	4x 4G/5G, SMA(m) 4x 2.4/5GHz Wi-Fi, RP-SMA(plug) 1x GNSS, SMA(m)	3G/4G/5G FR1 617-960/1710-2340/2400-2800/3300-3800/5100-6000 MHz Dual-band Wi-Fi (2.4/5GHz) 2400-2480/5100-5950 MHz GNSS 1560-1605 MHz	IR1800, IR8300 Can be used with products like IR1101 but has extra Wi-Fi elements not required for said product. Consider other multi-element antennas with corresponding adapters/extension cables

Industrial Wireless Access Point Antennas

Part Number / Description	RF Connectors	Antenna Frequency Band Support and Gain	Industrial Products Where Supported
Cisco Flat Panel Base Station Dual-Slant Polarization Antenna (IW-ANT-DS9-516-N), on page 867 Used for Point-to-Multipoint, where the installation requires a sector antenna on the AP to support Dual Slant panel antennas on the clients.	2x N-Type Female	4.9 - 5.95 GHz 16.0 dBi (min) 16.5 dBi (typ)	IW9167E IW9165D

Part Number / Description	RF Connectors	Antenna Frequency Band Support and Gain	Industrial Products Where Supported
Cisco Symmetrical Horn CC Antenna (IW-ANT-H90-510-N), on page 881 Scalar horn antennas have symmetrical main beam with identical beam width in Vertical and Horizontal plane. These antennas are ideal for coverage of areas with clients close to the installation site, where null zone issues exist. High density AP clusters and radio co-location is made possible due to unique radiation patterns and compact size.	2x N Female Bulkhead Connector	5180 - 6400 MHz 9.6 dBi	IW9167E IW9165D
Cisco Horizontally Polarized Omnidirectional Antenna (IW-ANT-OMH-55-N), on page 893 Designed for long-lasting operation with outdoor access points. Its rugged design withstands harsh environments, making the antenna ideal for industrial wireless, enterprise, and military applications. The antenna is DC grounded for ESD protection of radio components.	Type N Female	5.1-5.9 GHz 5 dBi	IW9167E IW9165D IW9165E
Cisco 4.9-6 GHz Omni Mobile WiFi Antenna (IW-ANT-OMM-53-N), on page 899	N-Female 1.5	4.9-6.0 GHz	IW9167EH IW9165E
Cisco Horizontally Polarized Omnidirectional Base Station Antenna (IW-ANT-OMV-55-N), on page 907 Design utilizes a linear array, encapsulated in a heavy-duty fiberglass radome with a thick-walled mounting base for reliable, long-term use. This rugged design withstands harsh environments, making the antenna ideal for Industrial Wireless and Military applications. The antennas in this series are DC grounded for ESD protection of radio components.	Type N Female	5.1-5.9 GHz 4 dBi	IW9167E IW9165D IW9165E
Cisco Spot-S 2x2 Wi-Fi MIMO Antenna (IW-ANT-PNL-59-N), on page 923 Small directional, planar, linear polarized antenna for outdoor and indoor applications. Features include: • Dual-slant +/- 45° for MIMO antenna configuration • WLAN IEEE 802.11 a/h/p/n • Rugged design, meets EN 50155 and EN 50125-3 railway standards • Ingress protection IP66 & IP67	N, jack (female) x2	5150 - 5935 MHz 9 dBi	IW9167E IW9165E

Part Number / Description	RF Connectors	Antenna Frequency Band Support and Gain	Industrial Products Where Supported
Industrial Wireless 2-port High Gain Panel Antenna (IW-ANT-PNL-515-N), on page 913 2-port high gain panel antenna is a directional 2-port array solution deployed in a variety of applications. Features include the following: • Compact design • 2x N(f) ports • Compatible mounting with IW9165D • IP66/67 rated • High port-to-port isolation	2x, N(m)-to-N(m), LMR-240, 3m cables	4900-5925 MHz 15 dBi	IW9165D IW9165E
Cisco Bi-Directional Train Top Antenna (IW-ANT-SKD-513-Q), on page 955 Bi-Directional Train Top Antenna antenna with a QMA connector. The antenna is designed to survive high vibration rail installations, including roof mounting on locomotive and passenger cars.	QMA	4.9-5.9 GHz 10-13 dBi	IW9167E IW9165E
Cisco Directional Train Top Antenna (IW-ANT-SKS-514-Q), on page 961 Directional Train Top Antenna antenna with a QMA connector. The antenna is designed to survive high vibration rail installations, including roof mounting on locomotive and passenger cars.	QMA	4.9-5.9 GHz 10-13 dBi	IW9167E IW9165E
Cisco Dual Polarization Base Station Antenna (IW-ANT-SS9-516-N), on page 967 Designed for point-to-multipoint connectivity in smart cities (coverage for parking lots, building-to-building connectivity etc), or ports and mines.	2x N-Type Female	4.9 - 6.425 GHz 16 dBi (typ)	IW9167E IW9165D

Planned End Of Service (EOS) Antennas

These are the antennas that are planned to reach their End Of Service. They are not recommended for new deployments.

Part Number / Description	RF Connectors	Antenna Frequency Band Support and Gain	Industrial Products Where Supported
Cisco 4G Indoor Ceiling-Mount Omnidirectional Antenna (4G-ANTM-OM-CM). Designed for indoor use with Cisco 3G cellular Enhanced High-Speed WAN Interface Cards (EHWICs) and is compatible with Cisco 3G cellular products using a threaded Neill-Concelman (TNC) Male connector.	TNC male	1 and 1.5 dBi 700–960 MHz 2 dBi 1448-1511 MHz 1.7 and 3.2 dBi 1700–2200 MHz 3 and 4 dBi 2500–2700 MHz	IR807, IR809, and IR829 IR1101 with P-LTE cellular module CGM-3G and CGM-4G modules in CGR1120 (with additional adapters & cable accessories)
Cisco 4G/3G Omnidirectional Dipole Antenna (4G-LTE-ANTM-D). The 4G-LTE-ANTM-D omnidirectional dipole antenna is designed for indoor use with Cisco 4G and Cisco 3G wireless Integrated Services Routers Generation 2 (ISRs G2) and Enhanced High-Speed WAN Interface Cards (EHWICs).	Articulated TNC male connector	4G LTE 698-960, 1710-2170, 2500-2700 MHz. 2 dBi	IR800 CGR 1000 Connected Grid Modules
Cisco Indoor Swivel-mount Dipole Antenna (ANT-4G-DP-IN-TNC). Indoor Swivel-mount Dipole 3G/4G Antenna supported on the Connected Grid Router 1120 and is designed to support Cellular/PCS/AWS/MDS, WiMAX 2100/2300/2500/2600 and global GSM900/GSM1800/UMTS/LTE2600 bands.	TNC male	4G LTE 698-960, 1710-2400, 2500-2700 MHz 0.5 dBi 698-960 MHz) 2.2 dBi 1710-2700 MHz	IR800 CGR 1000 Connected Grid Modules
Cisco Aironet 6.5-dBi Diversity Patch Antenna (AIR-ANT2465P-R). (AEOS date 04/30/2019) Diversity patch antenna designed for use with Cisco Aironet access points and bridges but can be used with any 2.4 GHz Cisco Aironet radio device that utilizes an RP-TNC connector.	RP-TNC	WiFi 2.4G 6.5 dBi	IR829
Cisco Aironet Omnidirectional Antennas AIR-ANT5150VG-N and AIR-ANT5150HG-N, on page 417 Vertically and horizontally polarized omnidirectional antennas designed for outdoor use.	Type N Male	Wi-Fi 5 GHz 5 dBi	IW-6300, ESW-6300 IW/ESW-6300 must be configured in single band mode.
Cisco Aironet Omnidirectional Antennas AIR-ANT2450V-N, AIR-ANT2450VG-N, AIR-ANT2450V-N-HZ, and AIR-ANT2450HG-N, on page 203 Omnidirectional antennas designed for outdoor use with Cisco Aironet Outdoor Access Points.	Type N Male	WiFi 2.4 GHz 5 dBi	Cisco Aironet 1552H, 1552S, 1552WU, IW-6300, ESW-6300. IW/ESW-6300 must be configured in single band mode.

End Of Service (EOS) Antennas

These are antennas that have reached their End Of Service.

Part Number / Description	RF Connectors	Antenna Frequency Band Support and Gain	Industrial Products Where Supported
Outdoor Panel Antenna for WiMAX 1.8, 2.5, and 3.8 GHz. Outdoor Panel Antenna for WiMAX 1.8, 2.5, and 3.8 GHz	N female (x2)	WiMAX 1.8, 2.5, 3.8 GHz. 16 +/- 1 dBi	CGR 1000 Connected Grid Modules
ANT-WM-INT-OUT-M (Similar to ANT-MP2-I-O-SS-M, except covering 3.3-3.6 GHz)	MCX jack	3.3-3.8 GHz N/A	WiMax CGM module only.
Cisco Multiband Panel Outdoor 3G Antenna (ANT-3G-PNL-OUT-N). Multiband Panel Outdoor 3G antenna designed to cover cellular 3G bands.	Type N female	3G 10 dBi 806-960 MHz 11 dBi 1710-2170 MHz	CGM-3G modules only
Cisco Multi-purpose Integrated Antenna (ANT-MP-INT-OUT-M). Multi-purpose integrated monopole antenna, chassis-mounted, omnidirectional, includes non-integrated coaxial cable. No cable (option class).	MCX jack	3G 2.8 dBi 806-960 MHz 3.5 dBi 1710-2170 MHz 4 dBi 2300-2700 MHz	CGM-3G only in CGR1240 chassis. This antenna is not mechanically compatible with CGR1120 chassis
Cisco Outdoor Omni Antenna for 900 MHz WPAN (ANT-WPAN-OM-OUT-N). Outdoor Omnidirectional Antenna for the 900 MHz WPAN module. **Note** Antenna will eventually be obsoleted in favor of the dual band 5 dBi, ANT-LPWA-DB-O-N-5	Type N female	WPAN 902-928 MHz only 4 dBi	IR509, IR510, and IR529 as well as WPAN CGM-WPAN-FSK-NA and CGM-WPAN-OFDM-FCC modules in CGR1240 and CGR1120

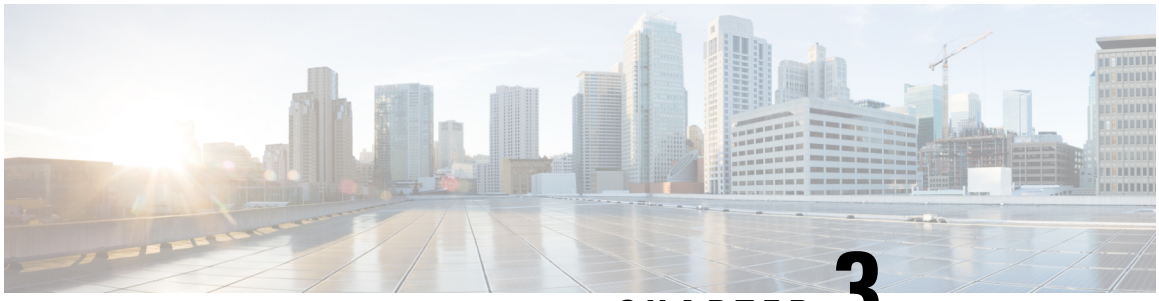

CHAPTER 3

Cisco RF Cables, Adapters, Lightning Arrestors, Extension Bases and other Accessories

This chapter contains the following:

- Cisco RF Cables, Adapters, Lightning Arrestors, Extension Bases and other Accessories, on page 31
- Cables, on page 32
- Cellular Antenna Extension Bases, on page 39
- Accessories, on page 40

Cisco RF Cables, Adapters, Lightning Arrestors, Extension Bases and other Accessories

The following tables are some of the more commonly used cables and accessories with the industrial routers and industrial wireless access points.

Throughout this guide you will see references to the different types of plugs and jacks used as connectors. The following figure shows the different types:

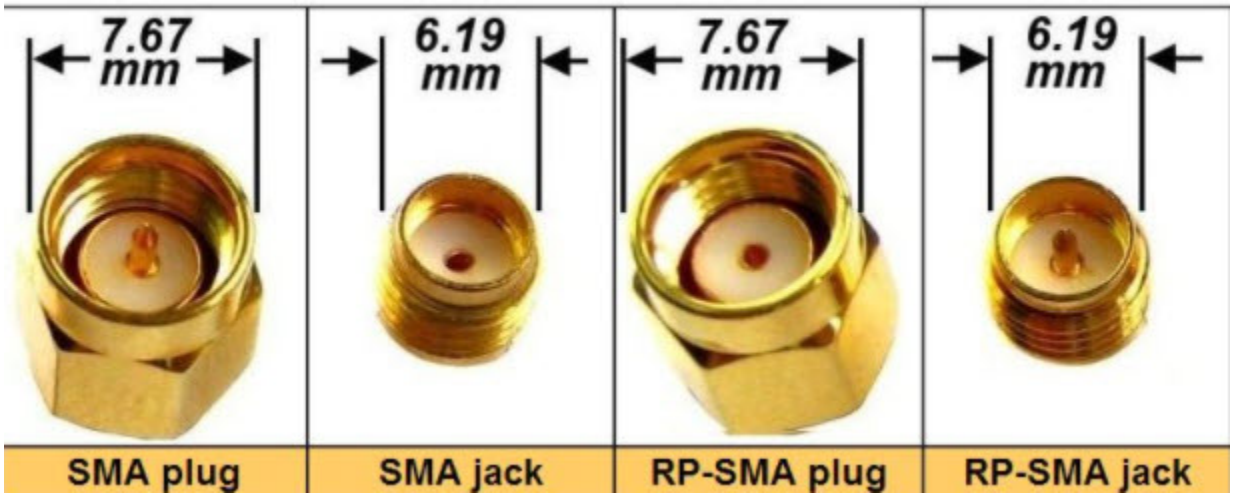

Cables

The following table provides information for other accessories supported by Cisco.

Table 1: N(m) to N(m) RF cables

Antenna Cable Type	Description	RF Loss
AIR-CAB002L240-N	N(m)-STR to N(m)-RALMR-240, 2 foot RF cable. Type: Indoor Interconnect. Not DB, CMR or CMP.	0.2dB @ 0. 0.3dB @ 1. 0.4dB @ 1. 0.5dB @ 2. 0.8dB @ 5.
AIR-CAB005LL-N	N(m)-STR to N(m)-RALMR-400, 5 foot RF cable. Type: outdoor DB (direct burial).	0.2dB @ 0. 0.3dB @ 1. 0.4dB @ 1. 0.5dB @ 2. 0.8dB @ 5.
CAB-L400-5-N-N	N(m)-STR to N(m)-RALMR-400, 5 foot RF cable. Type: outdoor DB (direct burial).	0.2dB @ 0. 0.3dB @ 1. 0.4dB @ 1. 0.5dB @ 2. 0.8dB @ 5.
CAB-L400-5-N-NS	N(m)-STR to N(m)-STR LMR-400, 5 foot RF cable. Type: outdoor DB (direct burial).	0.2dB @ 0. 0.3dB @ 1. 0.4dB @ 1. 0.5dB @ 2. 0.8dB @ 5.
AIR-CAB010LL-N	N(m)-STR to N(m)-RALMR-400, 10 foot RF cable. Type: outdoor DB (direct burial).	0.4dB @ 0. 0.5dB @ 1. 0.7dB @ 1. 0.9dB @ 2. 1.5dB @ 5.

Antenna Cable Type	Description	RF Loss
CAB-L400-20-N-N	N(m)-STR to N(m)-RALMR-400, 20 foot RF cable. Type: outdoor DB (direct burial).	0.8dB @ 1.0dB @ 1.3dB @ 1.6dB @ 2.5dB @
AIR-CAB025HZ-N	N(m)-STR to N(m)-STRLMR-400, 25 foot RF cable. Type: outdoor DB (direct burial) with additional resistance to petrochemicals and oils.	1.0dB @ 1.2dB @ 1.6dB @ 2.0dB @ 3.1dB @
CAB-L600-30-N-N	N(m)-STR to N(m)-RALMR-600, 30 foot RF cable. Type: outdoor DB (direct burial).	0.8dB @ 0.9dB @ 1.3dB @ 1.6dB @ 2.6dB @

Table 2: N(m) to QMA(m) RF cables

Antenna Cable Type	Description	RF Loss
CAB-L240-10-Q-N	N(m)-STR to QMA(m)-RALMR-240, 10 foot RF cable. Type: FR/CMR (Communication Cable Riser).	0.8dB @ 0.7 GHz 0.9dB @ 1.0 GHz 1.2dB @ 1.7 GHz 1.5dB @ 2.4 GHz 2.4dB @ 5.8 GHz

Antenna Cable Type	Description	RF Loss
CAB-L240-15-Q-N	N(m)-STR to QMA(m)-RALMR-240, 15 foot RF cable. Type: FR/CMR (Communication Cable Riser).	1.1dB @ 0.7 GHz 1.4dB @ 1.0 GHz 1.8dB @ 1.7 GHz 2.2dB @ 2.4 GHz 3.5dB @ 5.8 GHz
CAB-L240-20-Q-N	N(m)-STR to QMA(m)-RALMR-240, 20 foot RF cable. Type: FR/CMR (Communication Cable Riser)	1.5dB @ 0.7 GHz 1.8dB @ 1.0 GHz 2.4dB @ 1.7 GHz 2.9dB @ 2.4 GHz 4.7dB @ 5.8 GHz

Table 3: N(m) to RPTNC(jack) RF cables

Antenna Cable Type	Description	RF Loss
CAB-L240-10-N-R	N(m)-RA to RPTNC(jack)-STRLMR-240, 10 foot RF cable. Type: outdoor DB (direct burial).	1.5dB @ 2.4 GHz 2.4dB @ 5.8 GHz
CAB-L400-20-N-R	N(m)-RA to RPTNC(jack)-STRLMR-400, 20 foot RF cable Type: outdoor DB (direct burial)	1.6dB @ 2.4 GHz 2.5dB @ 5.8 GHz

Table 4: N(m) to RPTNC(plug) RF cables

Antenna Cable Type	Description	RF Loss
AIR-CAB005LL-R-N	N(m)-RA to RPTNC(plug)-STRLMR-240, 5 foot RF cable. Type: outdoor DB (direct burial).	0.5dB @ 2.4 GHz 0.8dB @ 5.8 GHz

Table 5: RPTNC(plug)-STR to RPTNC(jack)-STR

Antenna Cable Type	Description	RF Loss
AIR-CAB005PL-R	RPTNC (plug)-STR to RPTNC (jack)-STRLMR-195, 5 foot RF cable. Type: Plenum.	1.1dB @ 2.4 GHz 1.8dB @ 5.8 GHz
AIR-CAB005LL-R	RPTNC (plug)-STR to RPTNC (jack)-STRLMR-400, 5 foot RF cable. Type: outdoor DB (direct burial).	0.5dB @ 2.4 GHz 0.8dB @ 5.8 GHz
CAB-L400-10-R	RPTNC (plug)-RA to RPTNC (jack)-STRLMR-400, 10 foot RF cable. Type: outdoor DB (direct burial).	0.8dB @ 2.4 GHz 1.4dB @ 5.8 GHz
AIR-CAB020LL-R	RPTNC (plug)-STR to RPTNC (jack)-STRLMR-400, 20 foot RF cable. Type: outdoor DB (direct burial).	1.3dB @ 2.4 GHz 2.5dB @ 5.8 GHz
AIR-CAB050LL-R	RPTNC (plug)-STR to RPTNC (jack)-STRLMR-400, 50 foot RF cable. Type: outdoor DB (direct burial).	3.4dB @ 2.4 GHz 5.75dB @ 5.8 GHz
AIR-CAB100ULL-R	RPTNC (plug)-STR to RPTNC (jack)-STRLMR-600, 100 foot RF cable. Type: outdoor DB (direct burial).	4.4dB @ 2.4 GHz 7.25dB @ 5.8 GHz

Table 6: N(m) to TNC(m) RF cable

Antenna Cable Type	Description	RF Loss
CAB-L400-20-TNC-N	TNC(m)-RA to N(m)-STRLMR-400, 20 foot RF cable. Type: outdoor DB (direct burial).	0.8dB @ 0.7 GHz 1.0dB @ 1.0 GHz 1.3dB @ 1.7 GHz 1.6dB @ 2.4 GHz

Antenna Cable Type	Description	RF Loss
CAB-L400-50-TNC-N	TNC(m)-RA to N(m)-STRLMR-400, 50 foot RF cable. Type: outdoor DB (direct burial)	1.9dB @ 0.7 GHz 2.3dB @ 1.0 GHz 3.1dB @ 1.7 GHz 3.8dB @ 2.4 GHz

Table 7: TNC(m) to TNC(f) RF cable

Antenna Cable Type	Description	RF Loss
4G-CAB-LMR400-10	TNC(m)-RA to TNC(f)-STRLMR-400, 10 foot RF cable. Type: outdoor DB (direct burial).	0.4dB @ 0.7 GHz 0.5dB @ 1.0 GHz 0.7dB @ 1.7 GHz 0.8dB @ 2.4 GHz
4G-CAB-ULL-20	TNC(m)-RA to TNC(f)-STRLMR-400, 20 foot RF cable. Type: Plenum.	0.8dB @ 0.7 GHz 1.0dB @ 1.0 GHz 1.3dB @ 1.7 GHz 1.6dB @ 2.4 GHz
4G-CAB-LMR240-25	TNC(m)-RA to TNC(f)-STRLMR-240, 25 foot RF cable. Type: Plenum.	1.9dB @ 0.7 GHz 2.3dB @ 1.0 GHz 3.0dB @ 1.7 GHz 3.6dB @ 2.4 GHz

Antenna Cable Type	Description	RF Loss
4G-CAB-LMR240-50	TNC(m)-RA to TNC(f)-STRLMR-240, 50 foot RF cable. Type: Plenum. **Note** The cable is not recommended for longer distance links due to high loss of 50 foot LMR240 at most cellular frequencies. The customer may need to do a site survey to validate whether the cable allows sufficient signal-to-noise ratio to or from cell tower.	3.7dB @ 0.7 GHz 4.5dB @ 1.0 GHz 5.9dB @ 1.7 GHz 7.2dB @ 2.4 GHz
4G-CAB-ULL-50	TNC(m)-RA to TNC(f)-STRLMR-400, 50 foot RF cable. Type: Plenum.	1.9dB @ 0.7 GHz 2.3dB @ 1.0 GHz 3.1dB @ 1.7 GHz 3.8dB @ 2.4 GHz
4G-CAB-LMR240-75	TNC(m)-RA to TNC(f)-STRLMR-240, 75 foot RF cable. Type: Plenum. **Note** Note: The cable is not recommended for high throughput or longer distance links due to high loss of 75 foot LMR240 at most cellular frequencies. The customer may need to do a site survey to validate whether the cable allows sufficient signal-to-noise ratio to or from cell tower.	5.5dB @ 0.7 GHz 6.7dB @ 1.0 GHz 8.8dB @ 1.7 GHz 10.7dB @ 2.4 GHz

Table 8: TNC(m) to SMA(m) RF cables

Antenna Cable Type	Description	RF Loss
CAB-L240-10-SM-TM	SMA(m)-STR to TNC(m)-STRLMR-240, 10ft RF cable. Type: outdoor DB (direct burial).	0.8dB @ 0.7 GHz 0.9dB @ 1.0 GHz 1.2dB @ 1.7 GHz 1.5dB @ 2.4 GHz 1.6dB @ 2.7 GHz
CAB-L240-15-SM-TM	SMA(m)-STR to TNC(m)-STRLMR-240, 15ft RF cable. Type: outdoor DB (direct burial).	1.1dB @ 0.7 GHz 1.4dB @ 1.0 GHz 1.8dB @ 1.7 GHz 2.2dB @ 2.4 GHz 2.3dB @ 2.7 GHz
CAB-L240-20-SM-TM	SMA(m)-STR to TNC(m)-STRLMR-240, 20ft RF cable. Type: outdoor DB (direct burial).	1.5dB @ 0.7 GHz 1.8dB @ 1.0 GHz 2.4dB @ 1.7 GHz 2.9dB @ 2.4 GHz 3.1dB @ 2.7 GHz

Table 9: SMA(m) to SMA(f) cables

Antenna Cable Type	Description	RF Loss
CAB-L195-10-SM-SF	LMR195, 10ft SMA(m) to SMA(f)	1.2 dB @ 1.0 GHz 2.2 dB @ 3.0 GHz 3.0 dB @ 5.0 GHz 3.6 dB @ 7.0 GHz
CAB-L240-20-SM-SF	LMR240, 20ft SMA(m) to SMA(f)	1.6 dB @ 1.0 GHz 2.9 dB @ 3.0 GHz 3.8 dB @ 5.0 GHz 4.6 dB @ 7.0 GHz

Table 10: SMA (m) to N(m) RF cables

Antenna Cable Type	Description	RF Loss
CAB-L240-10-SM-NM	LMR240, 10ft SMA(m) to N(m)	0.9 dB @ 1.0 GHz 1.5 dB @ 3.0 GHz 2.0 dB @ 5.0 GHz 2.4 dB @ 7.0 GHz

Cellular Antenna Extension Bases

The following tables provide information for the Extension Bases supported by Cisco.

Table 11: Extension Bases

Extension Base PID	Description	RF Loss
4G-AE010-R	TNC(m)-STR to TNC(f)-STRLMR-195, 10 foot RF cable. Type: Plenum Antenna extension bases.	1.1dB @ 0.7 GHz 1.4dB @ 1.0 GHz 1.8dB @ 1.7 GHz 2.1dB @ 2.4 GHz 2.3dB @ 2.7 GHz

Extension Base PID	Description	RF Loss
4G-AE015-R	TNC(m)-STR to TNC(f)-STRLMR-195, 15 foot RF cable. Type: Plenum Antenna extension bases.	1.7dB @ 0.7 GHz 2.0dB @ 1.0 GHz 2.6dB @ 1.7 GHz 3.2dB @ 2.4 GHz 3.4dB @ 2.7 GHz
LTE-AE-MAG-SMA	TNC(f)-STR to SMA(f)-STR LMR-195, 1ft RF cable. Type: Plenum Antenna extension bases.	0.2dB @ 0.7 GHz 0.2dB @ 1.0 GHz 0.3dB @ 1.7 GHz 0.3dB @ 2.4 GHz 0.3dB @ 2.7 GHz

Accessories

Table 12: Cisco Lightning Arrestors

Cisco PID	Connectors Type	Arrestor Type and Frequency Range (MHz)
CGR-LA-NM-NF	N(m)-STR to N(f)-STR	DC to 7000 MHz, GDT type. Supports active GNSS antennas, passes DC. **Note** More details Cisco N-type Lightning Arrestor.
ACC-LA-H-NM-NF	N(m)-STR to N(f)-STR	698 to 2700 MHz, High power, ultra low shunt impedance, HPF type. Does not pass DC, no support for active GNSS antennas.
CGR-LA-NF-NF	N(f)-STR to N(f)-STR	DC to 7000 MHz, GDT type. Supports active GNSS antennas, passes DC. **Note** More details Cisco N-type Lightning Arrestor.

Cisco PID	Connectors Type	Arrestor Type and Frequency Range (MHz)
AIR-ACC245LA-R	RPTNC(jack)-STR to RPTNC(jack)-STR	DC to 6000 MHz, GDT type. Passes DC, but the RPTNC connectors are not commonly used with GNSS.
4G-ACC-OUT-LA	TNC(f)-STR to TNC(m)-STR	698 to 2700 MHz, HPF type, medium power. Does not pass DC, no support for active GNSS.
ACC-LA-G-TM-TF	TNC(f)-STR to TNC(m)-STR	DC to 6000 MHz, GDT type. Supports active GNSS antennas, passes DC.
ACC-LA-G-TF-TF	TNC(f)-STR to TNC(f)-STR	DC to 6000 MHz, GDT type. Supports active GNSS antennas, passes DC.

Table 13: Cisco Coaxial Adapters

Cisco PID	Connectors Type
AIR-ACC370-NM-RF	N(m)-STR to RPTNC(jack)-STR
AIR-ACC370-NF-NF	N(f)-STR to N(f)-STR
ANT-ADPTR-Q-TNC	QMA(m)-STR to TNC(f)-STR
LTE-ADPT-SM-TF	SMA(m)-STR to TNC(f)-STR

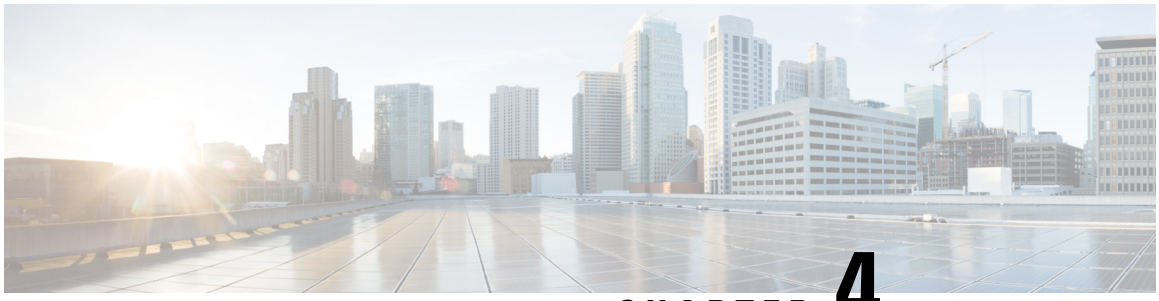

CHAPTER 4

Cisco N-type Lightning Arrestor

This chapter contains the following sections:

- Introduction, on page 43
- Kit Contents, on page 43
- Technical Specifications, on page 44
- Warnings, on page 45
- Installation Considerations, on page 45
- Installing the Lightning Arrestor, on page 45
- Suggested Cables, on page 47

Introduction

The Cisco Lightning Arrestor provides a level of safety protection to the user as well as to wireless equipment by shunting to ground over-voltage transients induced into outdoor antennas and cables. These transients, in mild cases can produce interfering signals in a wireless system, and in extreme cases, can be dangerous and destructive.

Overvoltage transients can be created through lightning static discharges, switch processes, direct contact with power lines, or through earth currents. The Cisco Lightning Arrestor limits the amplitude and duration of disturbing interference voltages and improves the overvoltage resistance of in-line equipment, systems, and components.

The Lightning Arrestor also provides the following benefits:

- Broadband operation
- DC continuity for outdoor powering
- Bidirectional installation
- Permanently installed gas capsule

Kit Contents

The lightning arrestor (CGR-LA-NM-NF, CGR-LA-NF-NF) contains the following parts:

- Lightning arrestor, nut, and washer

- Grounding lug

Technical Specifications

The following are the technical specifications of the Lightning Arrestor:

Feature	Description
Arrestor Type	Gas discharge tube
Main path connectors	Port 1: • CGR-LA-NM-NF: protected, N (male) • CGR-LA-NF-NF: protected, N (female) Port 2: protected, N (female, bulkhead side)
Impedance	50 ohms
Frequency range	0 MHz to 7000 MHz
Return loss	• 0 to 6700 MHz: -20 dB max • 6700 to 7000 MHz: -17 dB max
Insertion loss	• 0 to 6700 MHz: 0.2 dB max • 6700 to 7000 MHz: 0.3 dB max
RF CW power	Less than or equal to 60 W
Surge current handling capability	10 single, multiple kA (test pulse 8/20 microseconds)
Residual pulse energy	250 microsecond typically (test pulse 4 kV 1.2/50 microsecond; 2kA 8/20 microsecond), main path (protected side)
Operating temperature range	–40-degrees F to 185-degrees F (–40-degrees C to 85-degrees C)
Waterproof rating	IP 67 (according to IEC 60529, data refer to the coupled state)
Mounting and grounding	MH24 (bulkhead)
Material	• Housing: white bronze-plated aluminum • Male center contact: silver-plated brass • Female center contact: silver-plated phosphor bronze

Warnings

Warning This warning symbol means danger. You are in a situation that could cause bodily injury. Before you work on any equipment, be aware of the hazards involved with electrical circuitry and be familiar with standard practices for preventing accidents. Use the statement number provided at the end of each warning to locate its translation in the translated safety warnings that accompanied this device. **Statement 1071**

Warning Do not work on the system or connect or disconnect cables during periods of lightning activity. **Statement 1001**

Warning This equipment must be grounded. Never defeat the ground conductor or operate the equipment in the absence of a suitably installed ground conductor. Contact the appropriate electrical inspection authority or an electrician if you are uncertain that suitable grounding is available. **Statement 1024**

Warning Only trained and qualified personnel should be allowed to install, replace, or service this equipment. **Statement 1030**

Installation Considerations

We recommend that you bulkhead mount the lightning arrestor onto the router.

The importance of obtaining a good ground and bonding connection cannot be overstressed. Consider these points when grounding the lightning arrestor:

- Connect the lightning arrestor components directly to the chassis-mounted bulkhead connector.
- The contact points between the bulkhead connector and the lightning arrestor must be clean and free of dust and moisture.
- Tighten threaded contacts to the torque specified by the manufacturer.

Installing the Lightning Arrestor

The Cisco Lightning Arrestor must be bulkhead-mounted onto the enclosure or router chassis. The lightning arrestor must be attached directly onto a well-grounded chassis through the threaded shaft of the lightning arrestor and the bulkhead adapter.

Warning Installation of the equipment must comply with local and national electrical codes. **Statement 1074**

Note This part might be factory installed in an antenna port on the router when the router is shipped.

Note When you install the lightning arrestor, follow the regulations or best practices applicable to lightning protection installation in your local area.

Refer to the following figure during installation:

Figure 1: Lightning Arrestor Detail (CGR-LA-NM-NF shown)

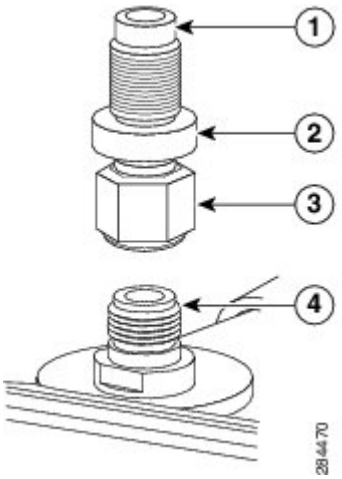

1	Protected side N jack (to antenna)
2	Lightning arrestor
3	Protected side N plug (to radio)
4	N-bulkhead port (on host chassis)

Installation Steps

Step 1 Install the bulkhead N-connector adapter onto the appropriate antenna port on the router chassis. Tighten to a 6-to-7 ft-lbs torque rating.

Step 2 Install the N-plug end of the lightning arrestor onto the top of the bulkhead N-connector). Tighten to a 6-to-7 ft-lbs torque rating.

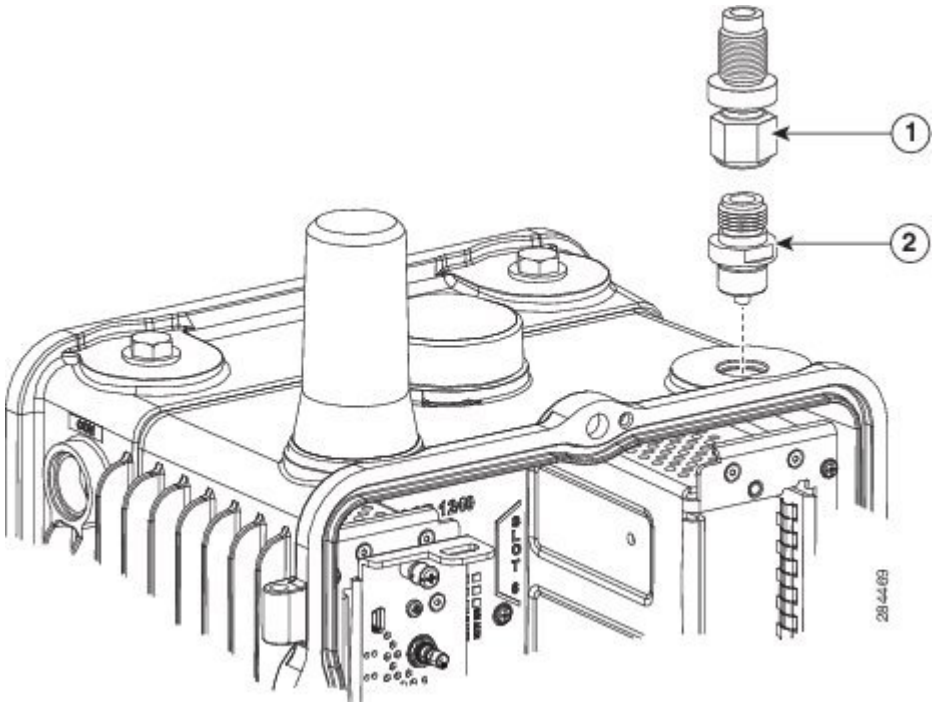

1	Lightning arrestor
2	N-bulkhead port (on host chassis)

Step 3 Install the N-plug end of your antenna cable onto the N-jack of the lightning arrestor. Tighten to a 6-to-7 ft-lbs torque rating.

Suggested Cables

We recommend using a 20’ LMR-400 N(m)-N(m) low-loss coaxial cable (part numbers CAB-L400-20-N-N) or a 30’ LMR-600 N(m)-N(m) very low-loss coaxial cable (CAB-L600-30-N-N).

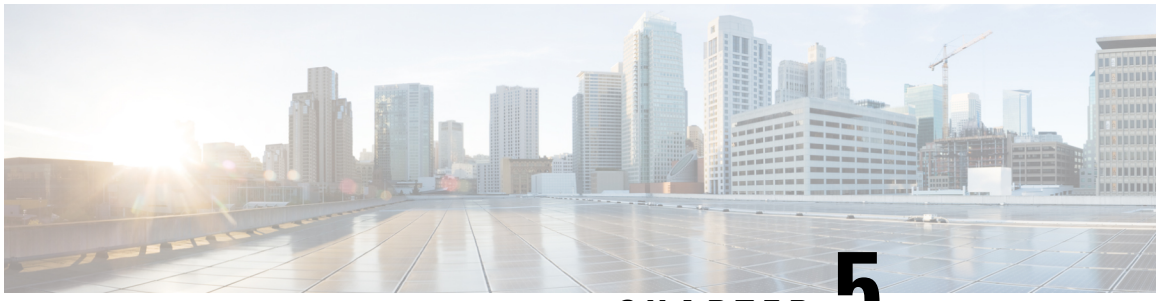

CHAPTER 5

Cisco 4G Indoor Ceiling-Mount Omnidirectional Antenna (4G-ANTM-OM-CM)

This chapter contains the following:

- Overview, on page 49
- Technical Specifications, on page 52
- System Requirements, on page 77
- Installation Notes, on page 77
- General Safety Precautions, on page 78
- Installation Instructions, on page 79
- Communications, Services, and Additional Information, on page 82

Overview

The 4G-ANTM-OM-CM antenna is a ceiling-mount omnidirectional antenna that operates in any of the 3G or 4G bands. These bands cover the following frequencies: 700, 800, 900, 1700, 1800, 1900, 2100,and 2600 MHz.

This antenna is designed for use with Cisco 3G cellular Enhanced High-Speed WAN Interface Cards (EHWICs) and is compatible with Cisco 3G cellular products using a threaded Neill-Concelman (TNC) Male connector.

The following graphic shows a front view of the 4G-ANTM-OM-CM antenna. The green circle around the Cisco logo means that this is a 4G antenna.

Figure 2: Cisco 4G-ANTM-OM-CM Antenna (Front View)



The following graphic shows a side view of the 4G-ANTM-OM-CM antenna.

Figure 3: Cisco 4G-ANTM-OM-CM Antenna (Side View)

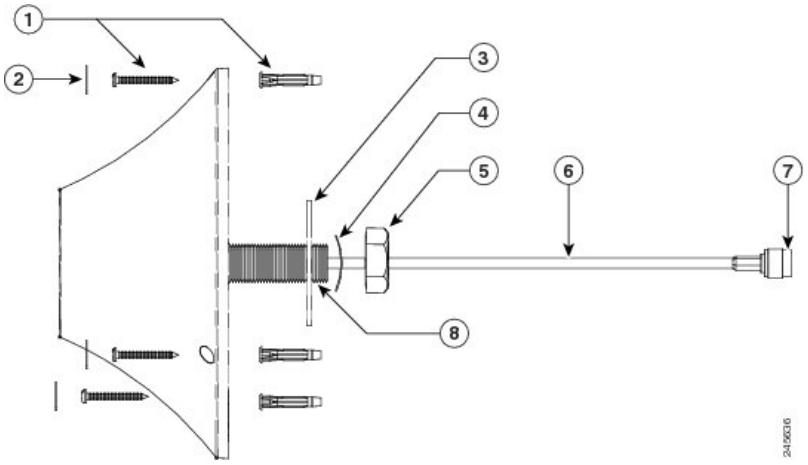

1	Mounting screws and anchors (#6 x 1-1/4”) for mounting on a hard ceiling
2	Self-adhesive screw covers
3	Flat washer (wide series)
4	Curved spring washer
5	Mounting nut
6	Antenna cable
7	TNC male connector
8	Thread (3/4”-16)

The following graphic shows a top view of the 4G-ANTM-OM-CM antenna.

Figure 4: Cisco 4G-ANTM-OM-CM Antenna (Top View)

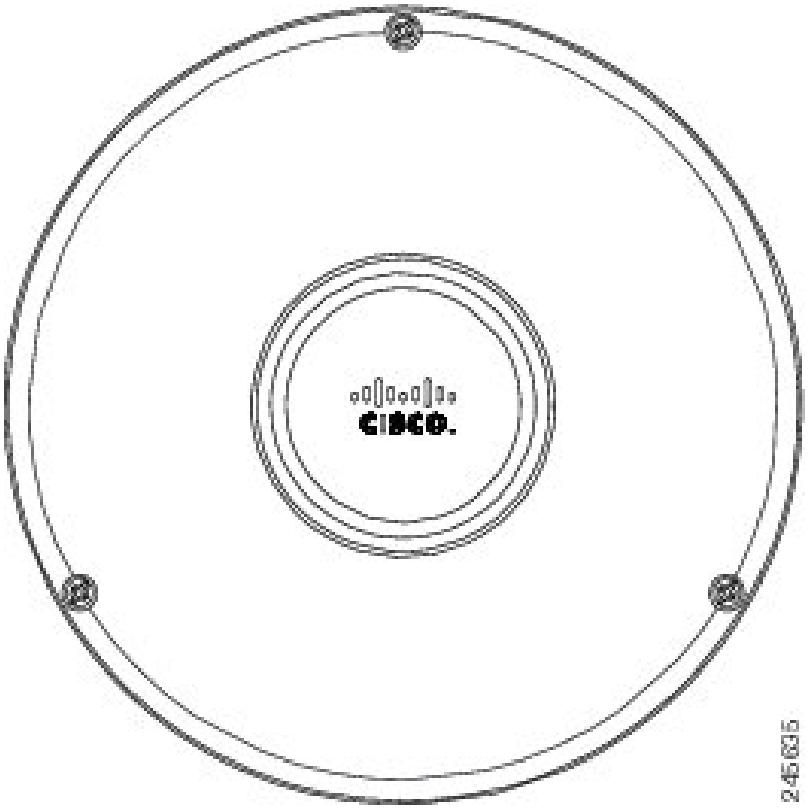

Technical Specifications

The following table lists the technical specifications for the 4G-ANTM-OM-CM antenna.

Antenna type	Low profile, ceiling-mount omnidirectional
Operating frequency range	698–806 MHz 824–894 MHz 925 –960 MHz 1575 MHz 1710–1885 MHz 1920–1980 MHz 2110–2170 MHz 2500–2690 MHz
Nominal Impedance	50 Ohms
Voltage Standing Wave Ratio (VSWR)	2.0:1 3.01:1 or less for GPS

Gain	700–960 MHz (1 and 1.5 dBi) 1700–2200 MHz (1.7 and 3.2 dBi) 2500–2700 MHz (3 and 4 dBi)
Radiation Pattern: Vertical plane (-3 dB beam-width)	700–960 MHz (80 and 95 degrees) 1700 MHz (80 and 90 degrees) 1800 MHz (75 and 95 degrees) 1900 MHz (65 and 90 degrees) 2100 MHz (50 and 65 degrees) 2500–2700 MHz (50 and 65 degrees)
Azimuth plane ripple	3.5 dB over all frequencies
Efficiency	70-85% over all supported frequencies
Connector type	TNC-Male
Polarization	Linear (vertical)
Power withstanding	3 W
Weight	0.7 lb (0.34 kg)
Color	White
Flammability	UL94 V0
Environment	Indoor
Mounting	Nut, flat washer, curved spring washer, #6 x 1-1/4” mounting screws and anchors to be used for mounting to a hard ceiling, self adhesive screw covers.
Operating temperature	–22° to 158°F (–30° to 70°C)
Storage temperature	–40° to 185°F (–40° to 85°C)

The following graphic shows the azimuth plane patterns for the 700 MHz band for the 4G-ANTM-OM-CM antenna.

Figure 5: Azimuth Plane Patterns for the 700 MHz Band

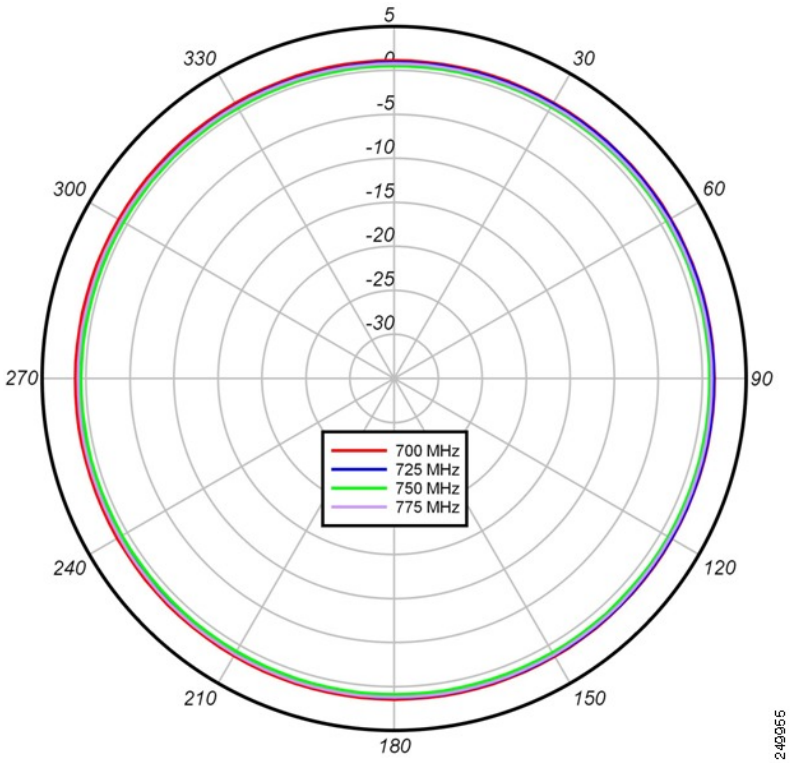

The following graphic shows the azimuth plane patterns for the 800 MHz band for the 4G-ANTM-OM-CM antenna.

Figure 6: Azimuth Plane Patterns for the 800 MHz Band

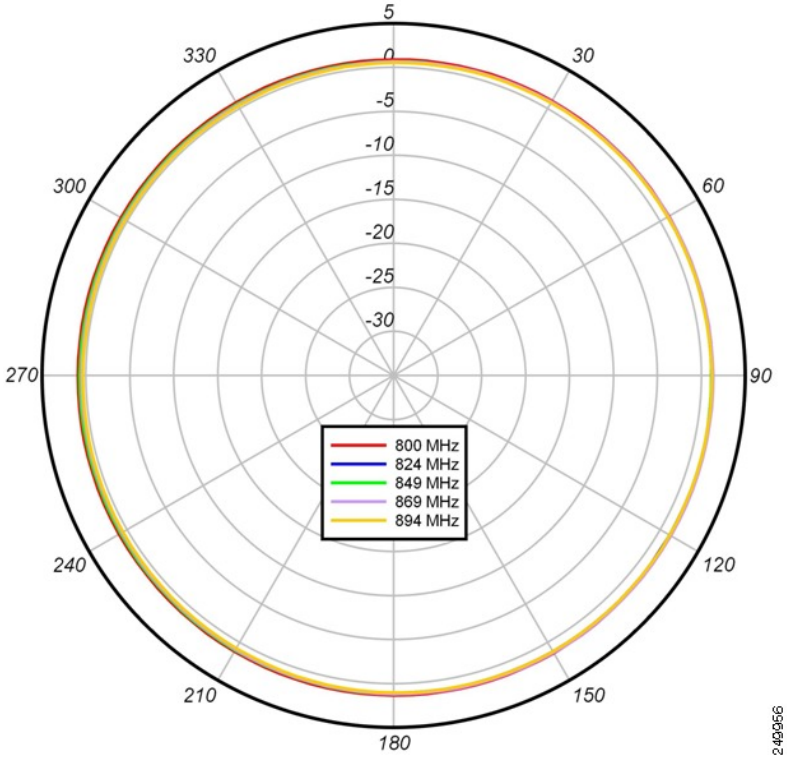

The following graphic shows the azimuth plane patterns for the 900 MHz band for the 4G-ANTM-OM-CM antenna.

Figure 7: Azimuth Plane Patterns for the 900 MHz Band

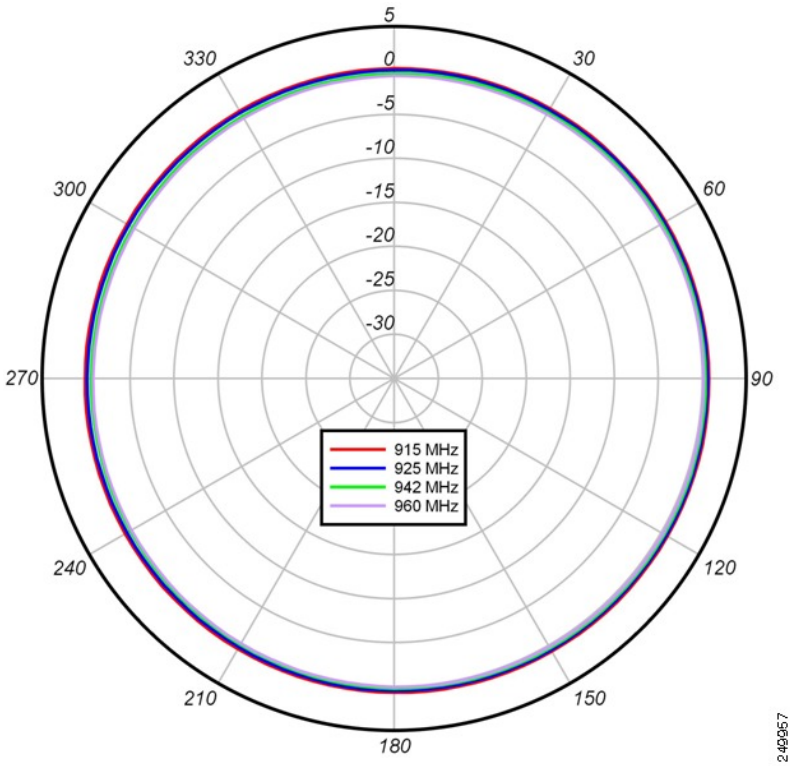

The following graphic shows the azimuth plane patterns for the 1700 MHz band for the 4G-ANTM-OM-CM antenna.

Figure 8: Azimuth Plane Patterns for the 1700 MHz Band

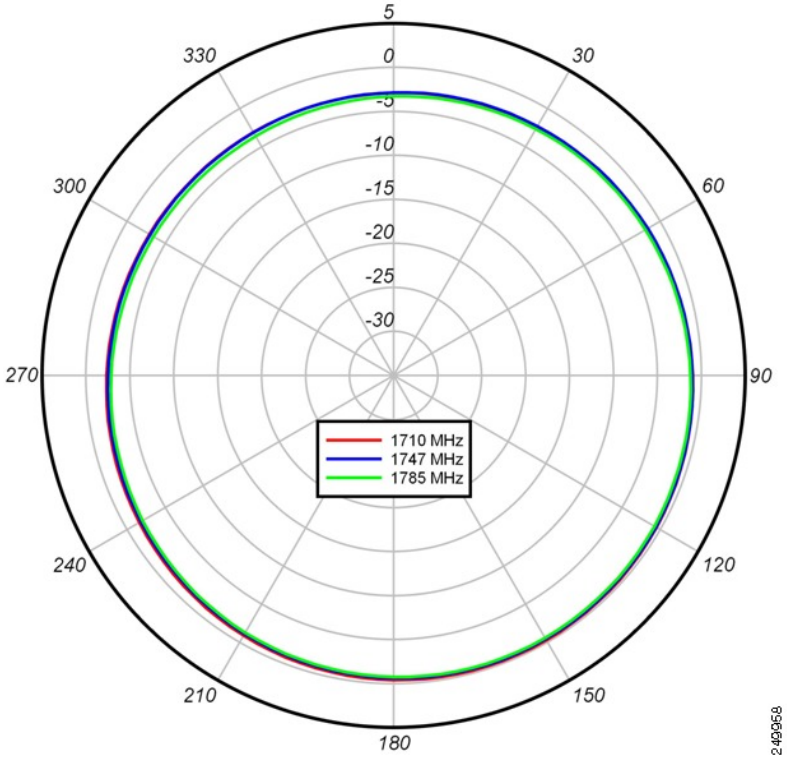

The following graphic shows the azimuth plane patterns for the 1800 MHz band for the 4G-ANTM-OM-CM antenna.

Figure 9: Azimuth Plane Patterns for the 1800 MHz Band

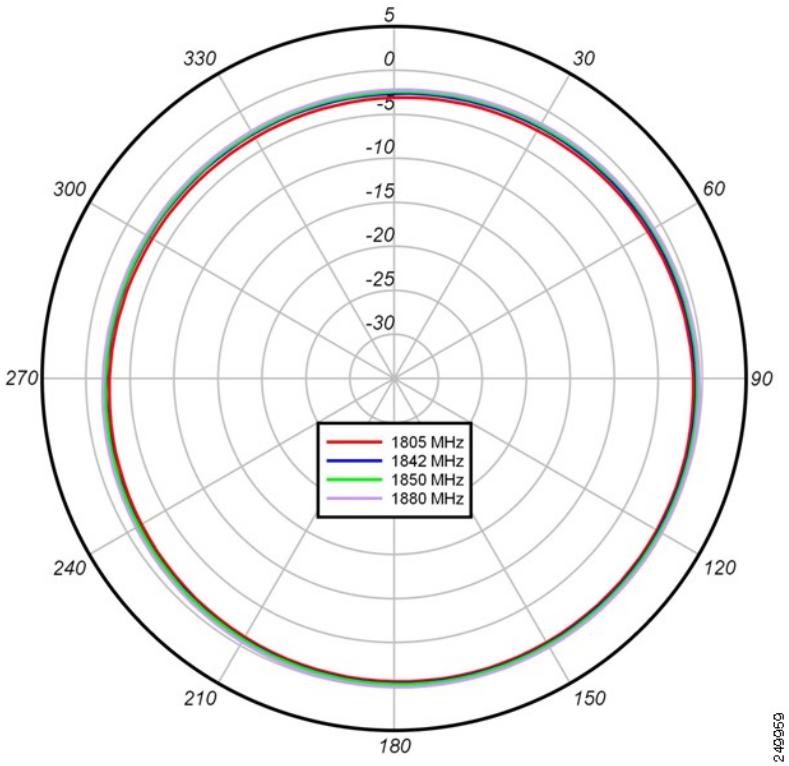

The following graphic shows the azimuth plane patterns for the 1900 MHz band for the 4G-ANTM-OM-CM antenna.

Figure 10: Azimuth Plane Patterns for the 1900 MHz Band

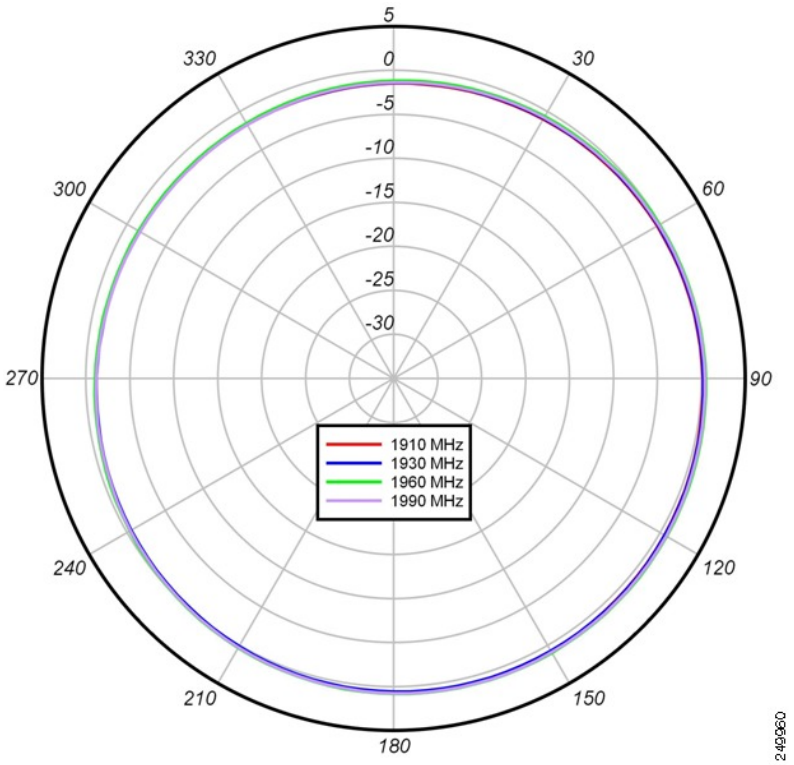

The following graphic shows the azimuth plane patterns for the 2100 MHz band for the 4G-ANTM-OM-CM antenna.

Figure 11: Azimuth Plane Patterns for the 2100 MHz Band

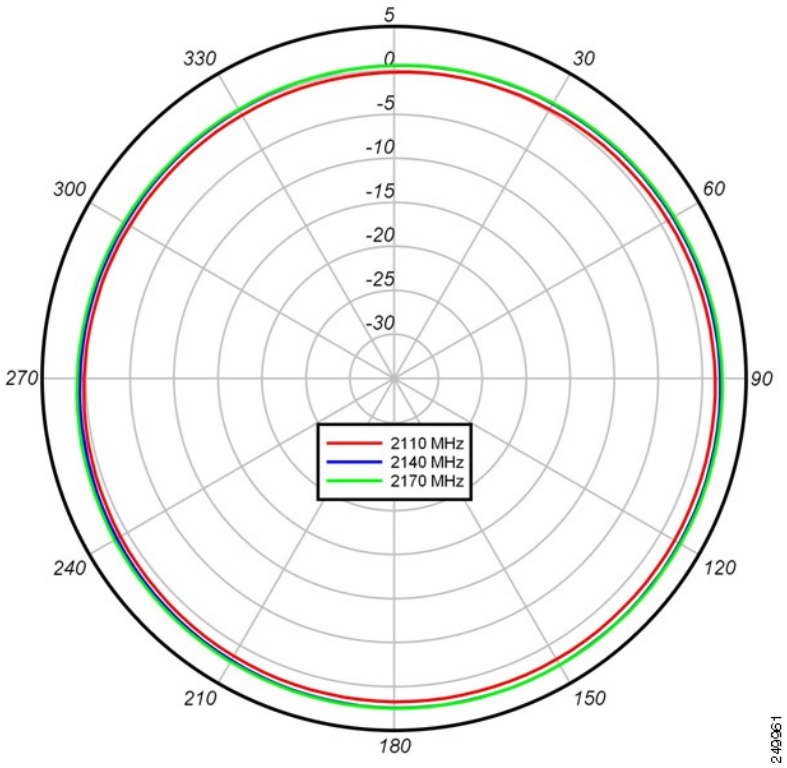

The following graphic shows the azimuth plane patterns for the 2600 MHz band for the 4G-ANTM-OM-CM antenna.

Figure 12: Azimuth Plane Patterns for the 2600 MHz Band

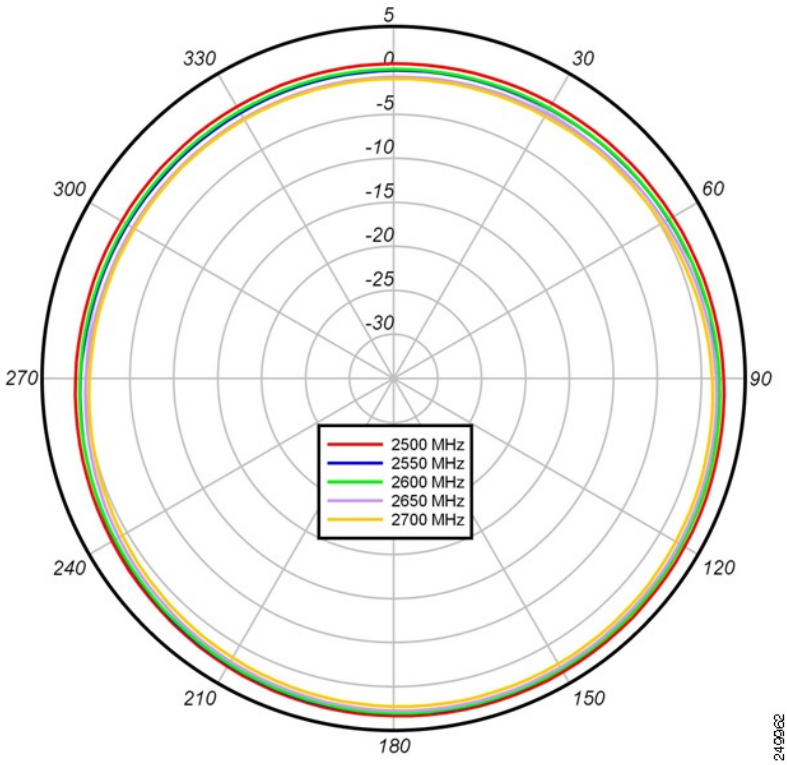

The following graphic shows the elevation plane patterns (Phi = 0 degree plane cut) for the 700 MHz band for the 4G-ANTM-OM-CM antenna.

Figure 13: Elevation Plane Patterns (Phi = 0 degree Plane Cut) for the 700 MHz Band

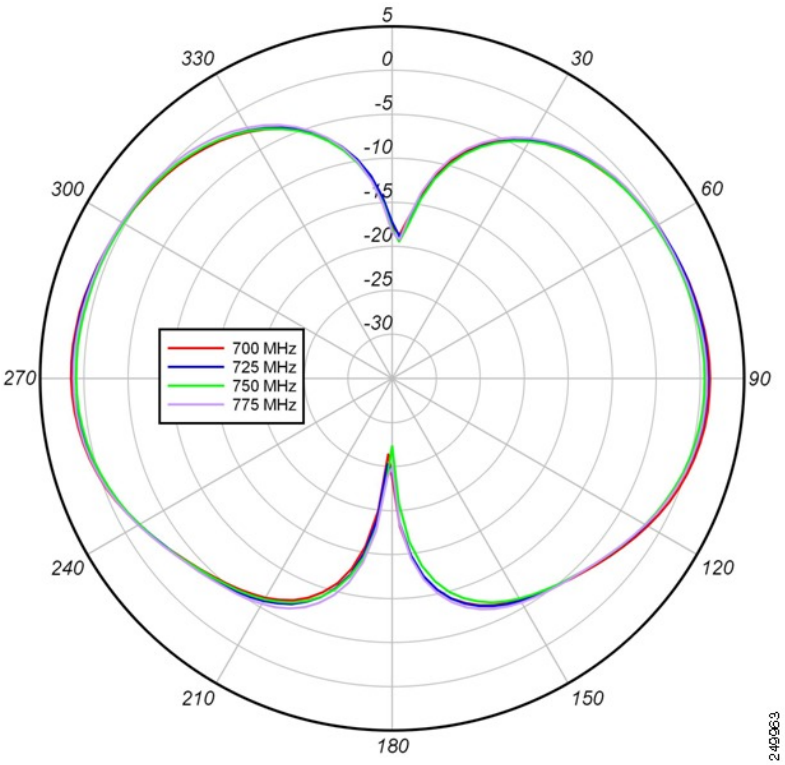

The following graphic shows the elevation plane patterns (Phi = 0 degree plane cut) for the 800 MHz band for the 4G-ANTM-OM-CM antenna.

Figure 14: Elevation Plane Patterns (Phi = 0 degree Plane Cut) for the 800 MHz Band

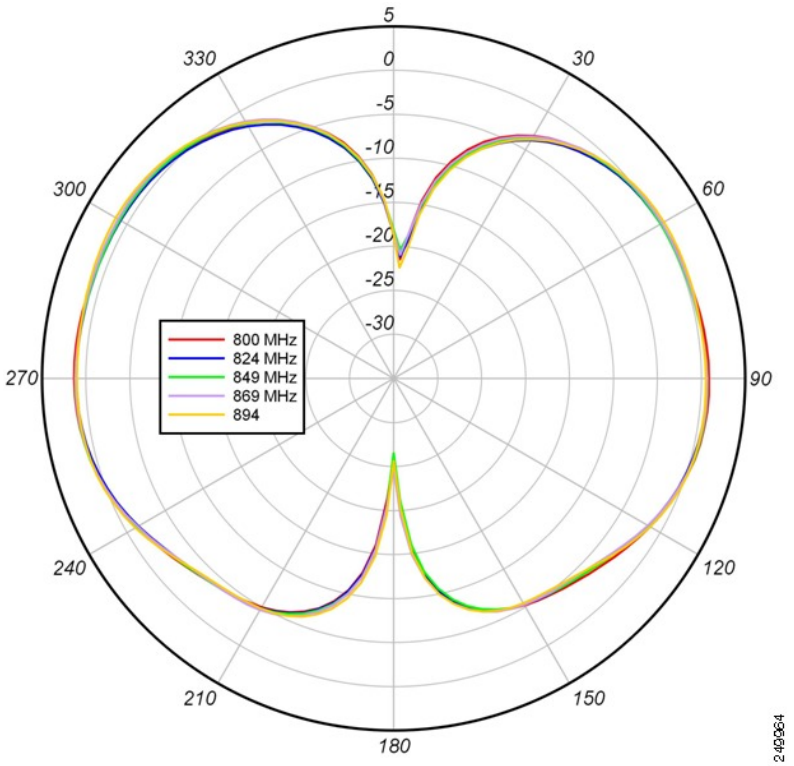

The following graphic shows the elevation plane patterns (Phi = 0 degree plane cut) for the 900 MHz band for the 4G-ANTM-OM-CM antenna.

Figure 15: Elevation Plane Patterns (Phi = 0 degree Plane Cut) for the 900 MHz Band

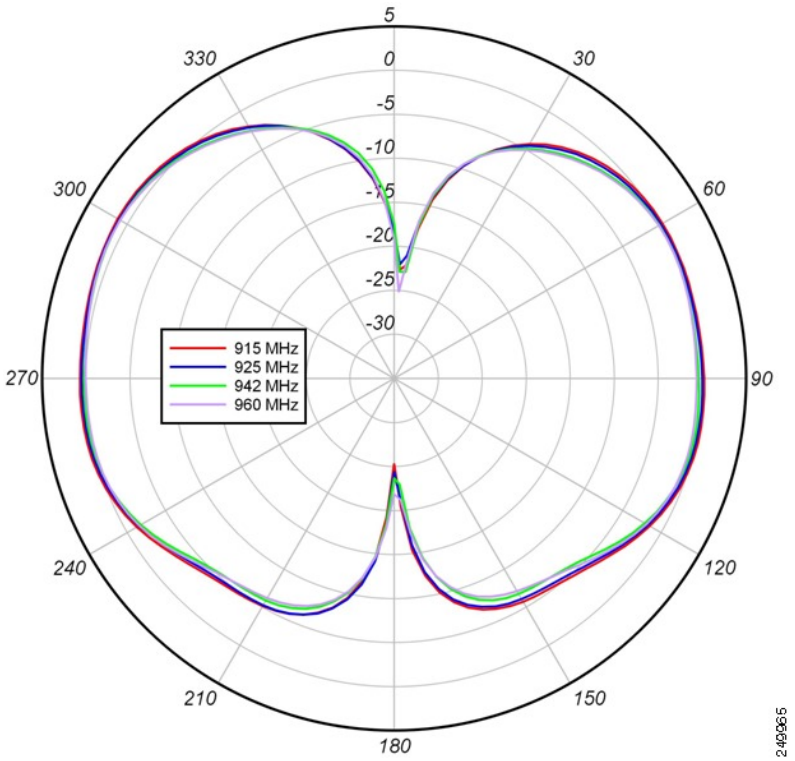

The following graphic shows the elevation plane patterns (Phi = 0 degree plane cut) for the 1700 MHz band for the 4G-ANTM-OM-CM antenna.

Figure 16: Elevation Plane Patterns (Phi = 0 degree Plane Cut) for the 1700 MHz Band

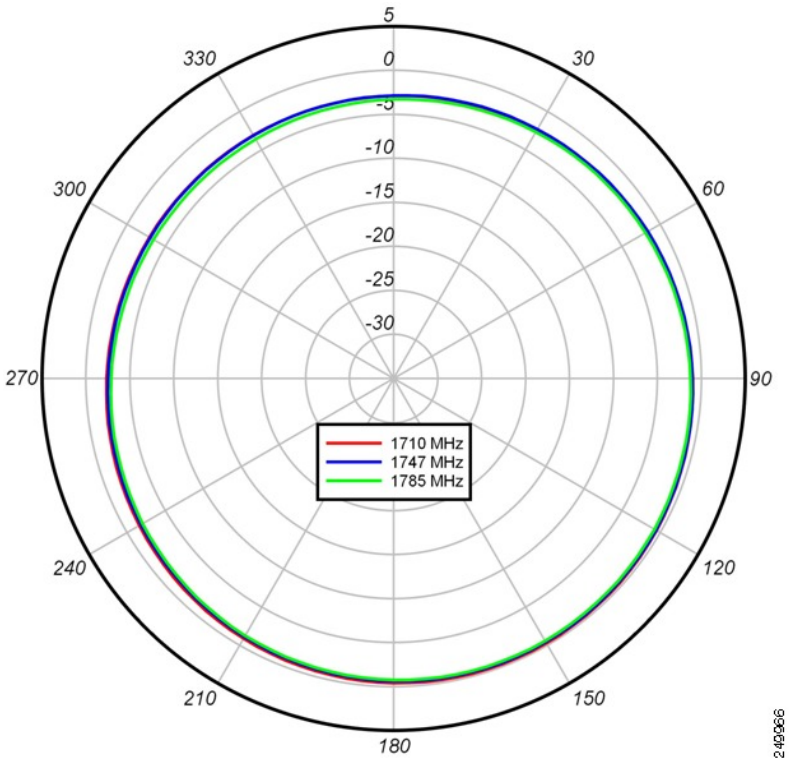

The following graphic shows the elevation plane patterns (Phi = 0 degree plane cut) for the 1800 MHz band for the 4G-ANTM-OM-CM antenna.

Figure 17: Elevation Plane Patterns (Phi = 0 degree Plane Cut) for the 1800 MHz Band

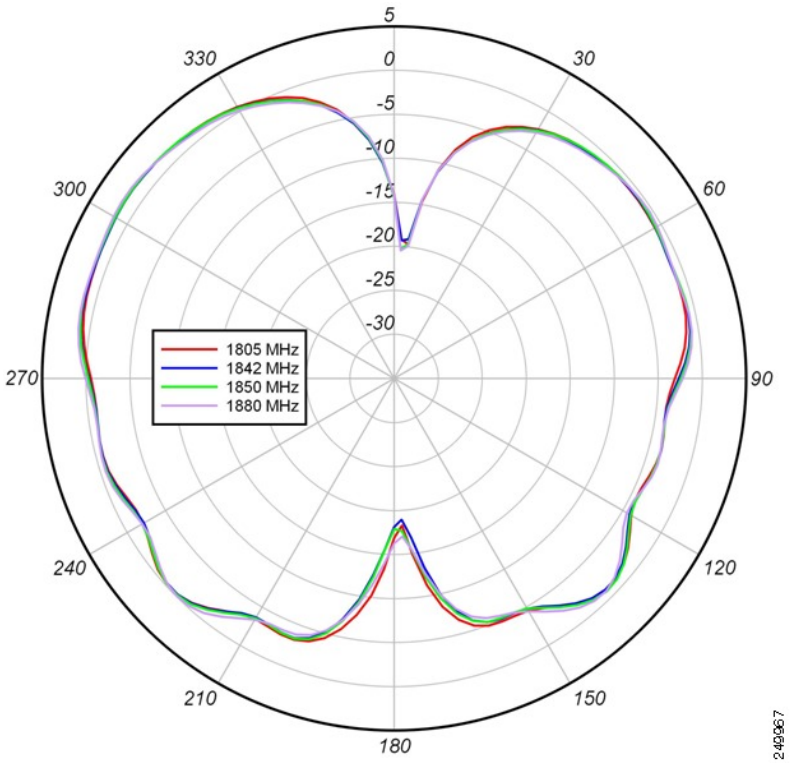

The following graphic shows the elevation plane patterns (Phi = 0 degree plane cut) for the 1900 MHz band for the 4G-ANTM-OM-CM antenna.

Figure 18: Elevation Plane Patterns (Phi = 0 degree Plane Cut) for the 1900 MHz Band

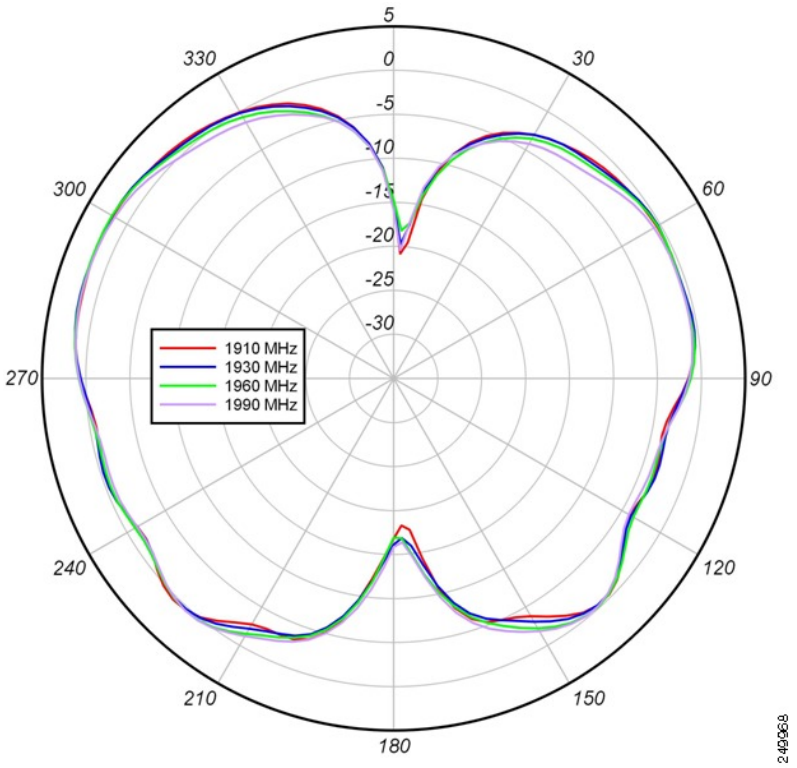

The following graphic shows the elevation plane patterns (Phi = 0 degree plane cut) for the 2100 MHz band for the 4G-ANTM-OM-CM antenna.

Figure 19: Elevation Plane Patterns (Phi = 0 degree Plane Cut) for the 2100 MHz Band

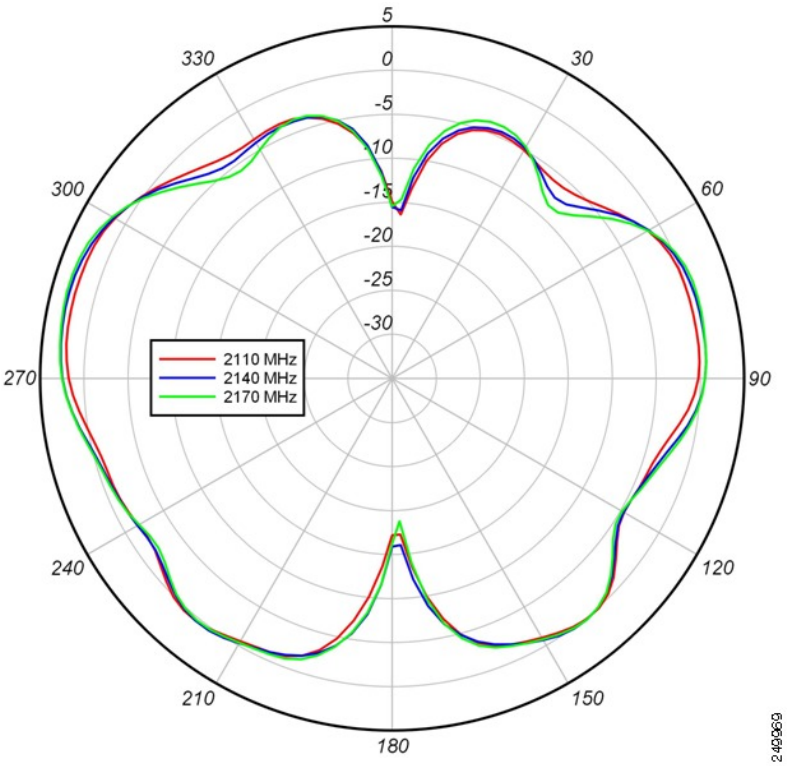

The following graphic shows the elevation plane patterns (Phi = 0 degree plane cut) for the 2600 MHz band for the 4G-ANTM-OM-CM antenna.

Figure 20: Elevation Plane Patterns (Phi = 0 degree Plane Cut) for the 2600 MHz Band

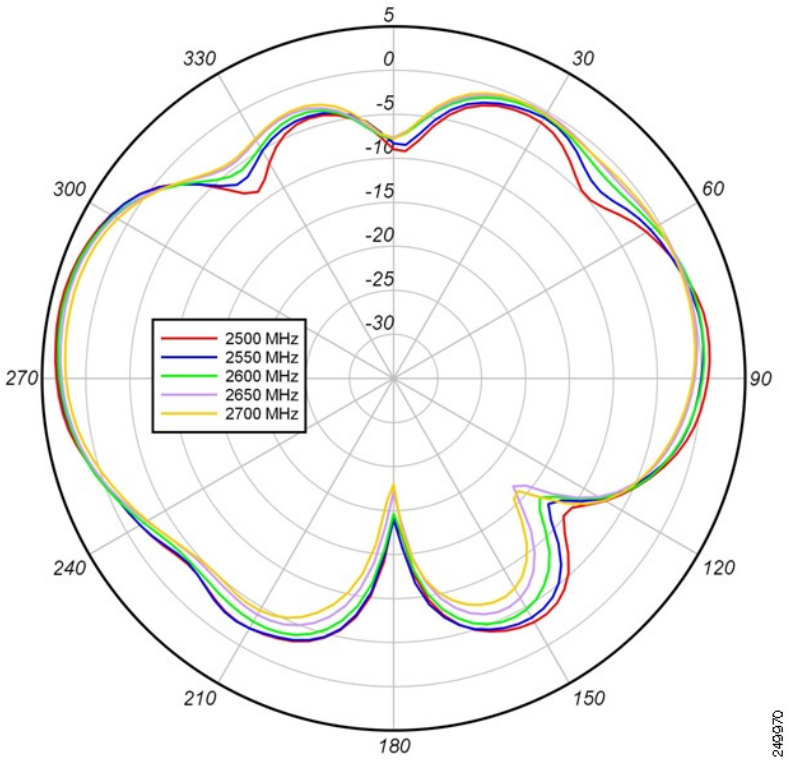

The following graphic shows the elevation plane patterns (Phi = 90 degree plane cut) for the 700 MHz band for the 4G-ANTM-OM-CM antenna.

Figure 21: Elevation Plane Patterns (Phi = 90 degree Plane Cut) for the 700 MHz Band

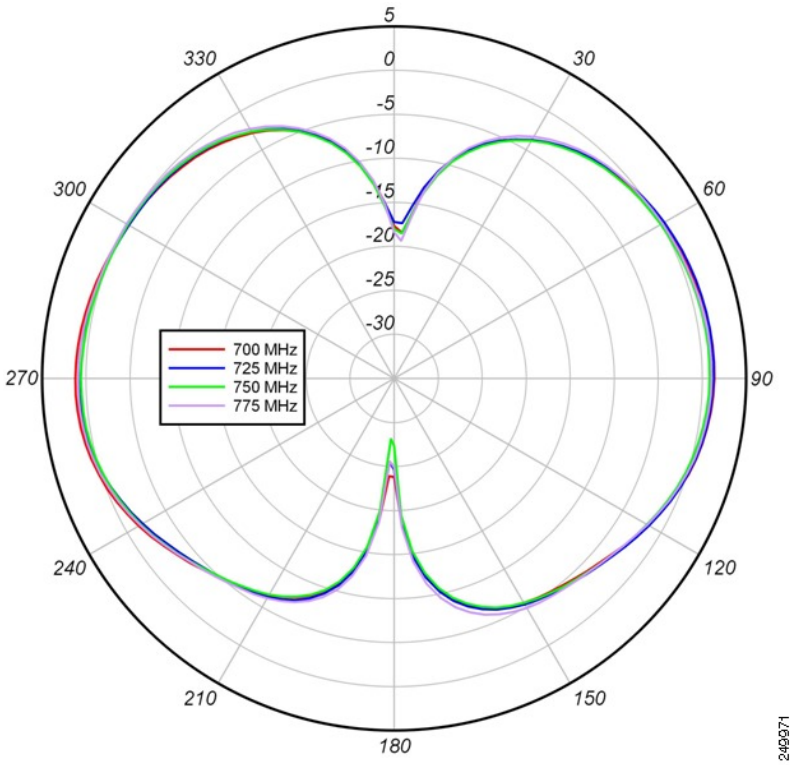

The following graphic shows the elevation plane patterns (Phi = 90 degree plane cut) for the 800 MHz band for the 4G-ANTM-OM-CM antenna.

Figure 22: Elevation Plane Patterns (Phi = 90 degree Plane Cut) for the 800 MHz Band

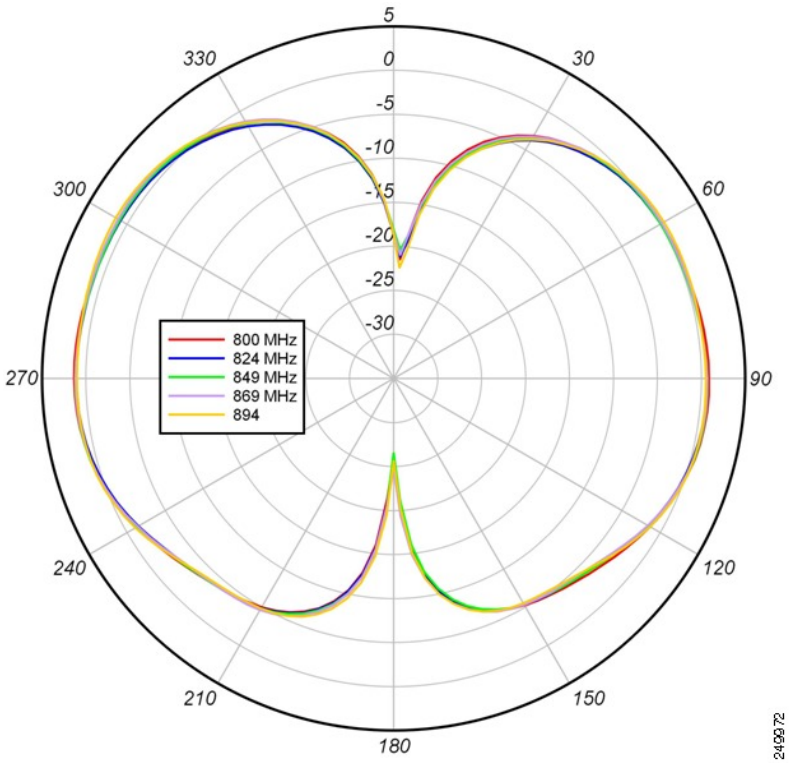

The following graphic shows the elevation plane patterns (Phi = 90 degree plane cut) for the 900 MHz band for the 4G-ANTM-OM-CM antenna.

Figure 23: Elevation Plane Patterns (Phi = 90 degree Plane Cut) for the 900 MHz Band

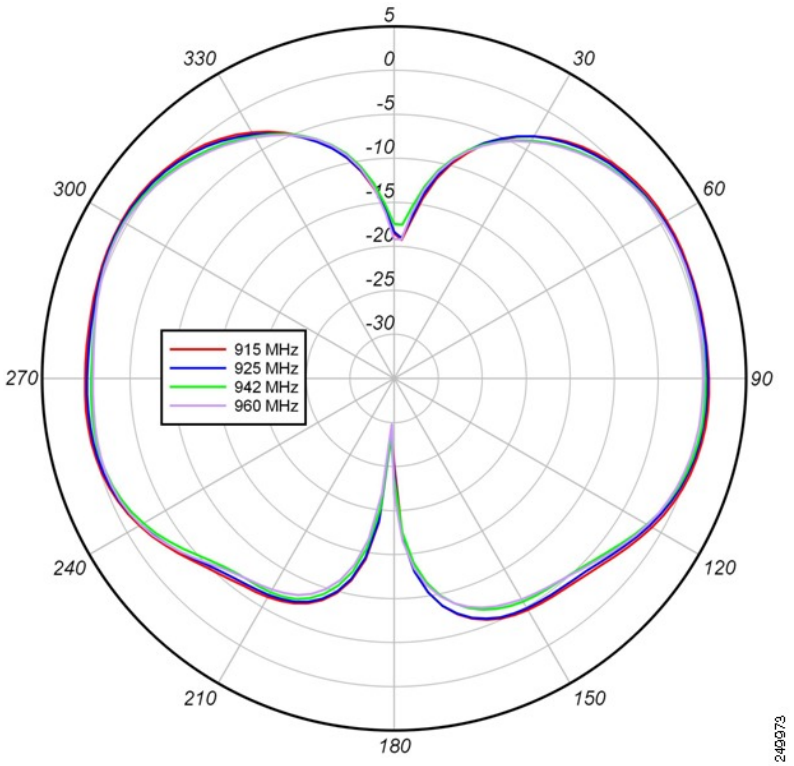

The following graphic shows the elevation plane patterns (Phi = 90 degree plane cut) for the 1700 MHz band for the 4G-ANTM-OM-CM antenna.

Figure 24: Elevation Plane Patterns (Phi = 90 degree Plane Cut) for the 1700 MHz Band

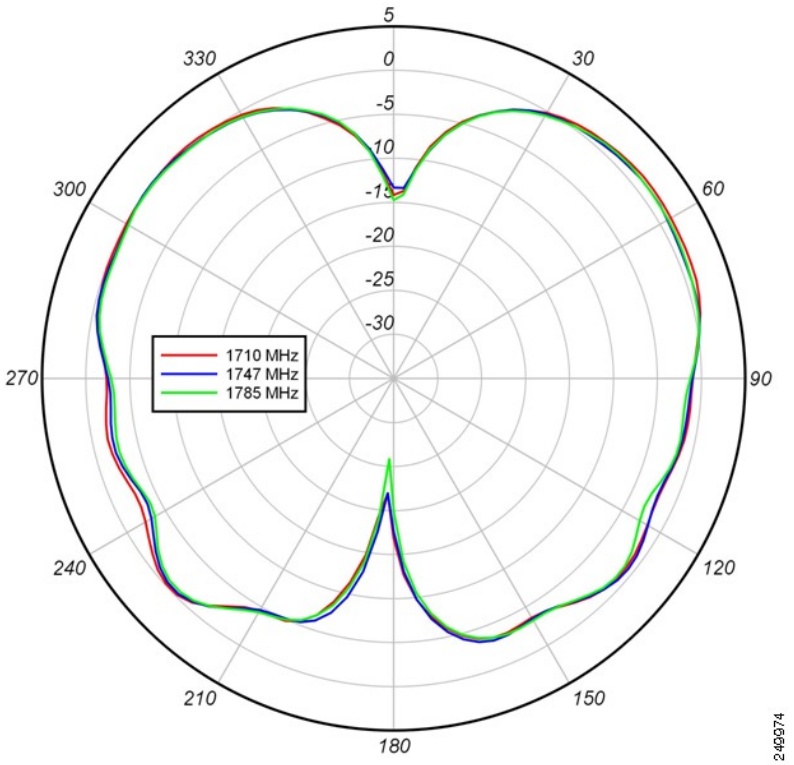

The following graphic shows the elevation plane patterns (Phi = 90 degree plane cut) for the 1800 MHz band for the 4G-ANTM-OM-CM antenna.

Figure 25: Elevation Plane Patterns (Phi = 90 degree Plane Cut) for the 1800 MHz Band

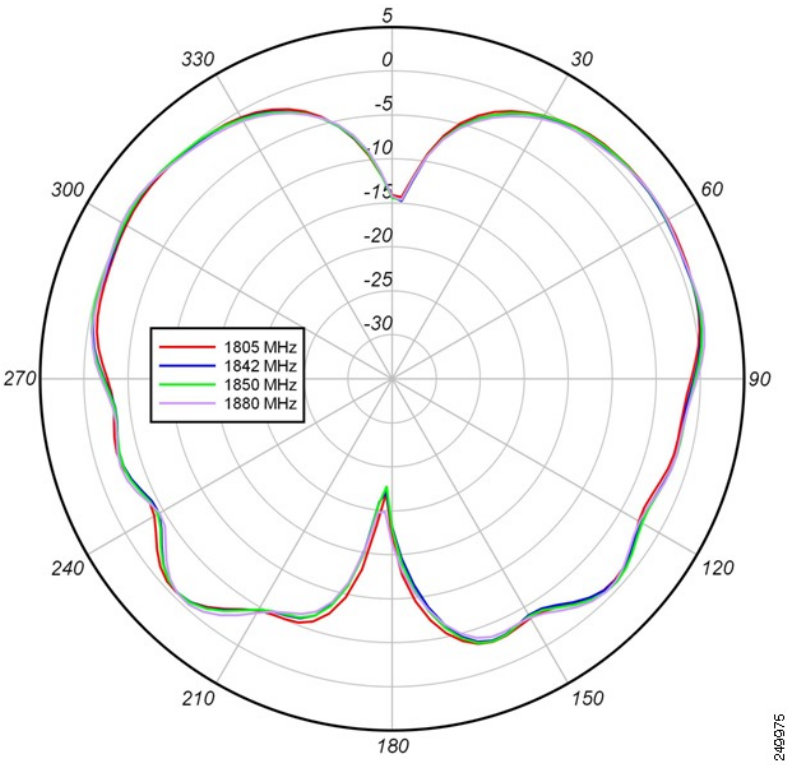

The following graphic shows the elevation plane patterns (Phi = 90 degree plane cut) for the 1900 MHz band for the 4G-ANTM-OM-CM antenna.

Figure 26: Elevation Plane Patterns (Phi = 90 degree Plane Cut) for the 1900 MHz Band

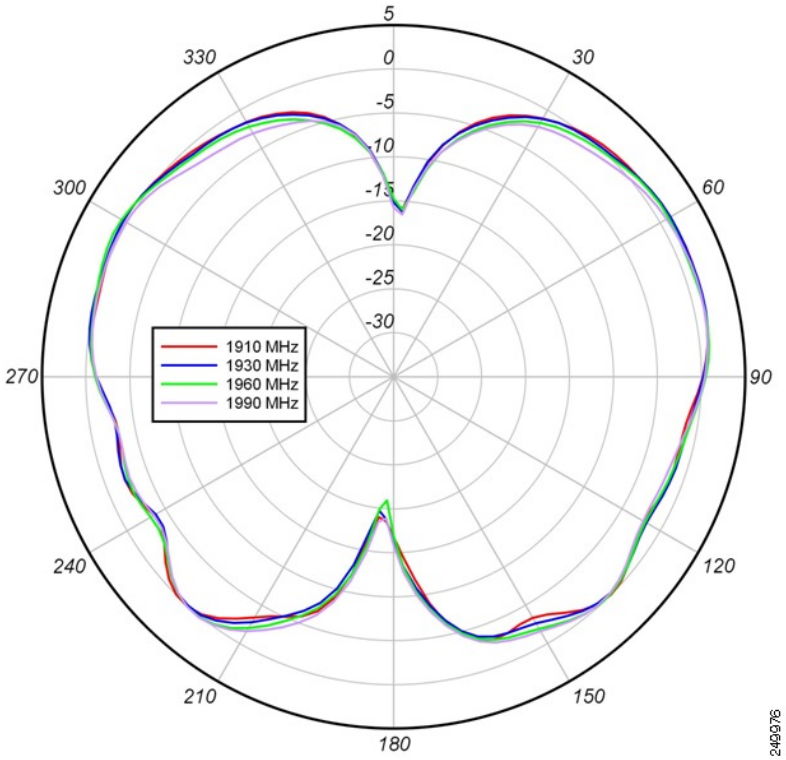

The following graphic shows the elevation plane patterns (Phi = 90 degree plane cut) for the 2100 MHz band for the 4G-ANTM-OM-CM antenna.

Figure 27: Elevation Plane Patterns (Phi = 90 degree Plane Cut) for the 2100 MHz Band

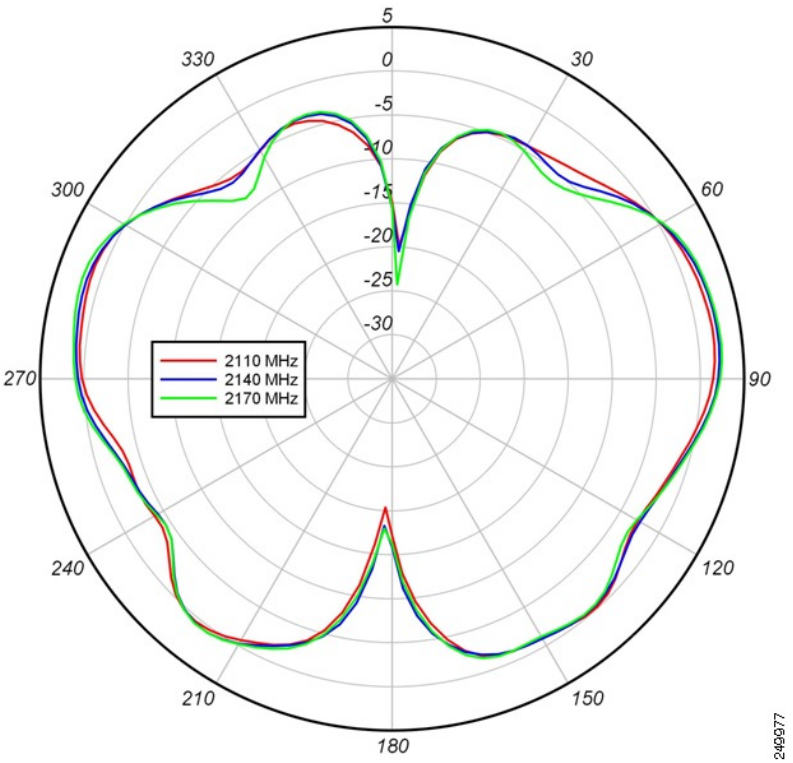

The following graphic shows the elevation plane patterns (Phi = 90 degree plane cut) for the 2600 MHz band for the 4G-ANTM-OM-CM antenna.

Figure 28: Elevation Plane Patterns (Phi = 90 degree Plane Cut) for the 2600 MHz Band

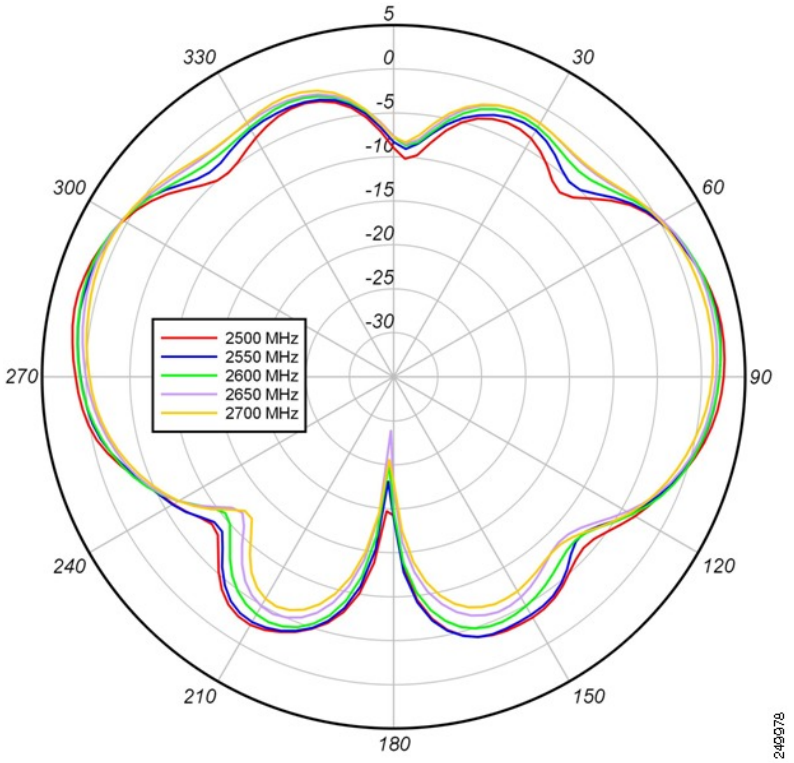

System Requirements

The 4G-ANTM-OM-CM antenna requires a Cisco 3G EHWIC that uses a TNC-Male connector.

Installation Notes

This antenna is designed to be mounted indoors on a ceiling. The antenna is mountable to ceiling tiles less than 1” thick or to hard ceilings with the included installation accessories.

Follow these guidelines to ensure the best possible performance:

The antenna must be mounted to a ceiling to maximize its omnidirectional propagation characteristics. Mounting it on a wall may noticeably decrease the antenna range and overall performance.

Wherever possible, mount the EHWIC and antenna where the wireless devices would be within sight and avoid physical obstructions. Barriers along the line of sight between antenna and EHWIC degrades the wireless radio signals.

Install the EHWIC and any antennas away from appliances that share the same frequency bands. Microwave ovens, cordless telephones, and security monitors can temporarily interfere with wireless performance.

We recommend you avoid installing wireless antennas in or near rack-mounted installations that include networking equipment and computer servers whose radiated noise emissions can severely degrade radio performance.

General Safety Precautions

Warning This warning symbol means danger. You are in a situation that could cause bodily injury. Before you work on any equipment, be aware of the hazards involved with electrical circuitry and be familiar with standard practices for preventing accidents. Use the statement number provided at the end of each warning to locate its translation in the translated safety warnings that accompanied this device. **Statement 1071**

Warning Do not work on the system or connect or disconnect cables during periods of lightning activity. **Statement 1001**

Warning Do not locate the outdoor antenna near overhead power lines or other electric light or power circuits, or where it can come into contact with such circuits. When installing the antenna, take extreme care not to come into contact with such circuits, as they may cause serious injury or death. For proper installation and grounding of the antenna, please refer to national and local codes (for example, U.S.:NFPA 70, National Electrical Code, Article 810, Canada:Canadian Electrical Code, Section 54). **Statement 1052**

Warning In order to comply with FCC radio frequency (RF) exposure limits, antennas should be located at a minimum of 7.9 inches (20 cm) or more from the body of all persons. **Statement 332**

Note For your safety, and to help you achieve a good installation, please read and follow these safety precautions.

Mast Mounted or Building Mounted Installations

The following instructions are common to most mast mounted or building mounted installations. For specific installation instructions for each antenna, see the antenna data-sheet and the router hardware installation guide.

- Find someone to help you—installing an antenna is often a two-person job.
- Select your installation site with safety, as well as performance, in mind. Remember that electric power lines and phone lines look alike. For your safety, assume that any overhead line can kill you.
- Contact your electric power company. Tell them your plans and ask them to come look at your proposed installation.
- Do not use a metal ladder.
- Do not work on a wet or windy day.
- Do dress properly—wear shoes with rubber soles and heels, rubber gloves, and a long-sleeved shirt or jacket.

- If the assembly starts to drop, move away from it and let it fall. Because the antenna, mast, cable, and metal guy wires are all excellent conductors of electrical current, even the slightest touch of any of these parts to a power line completes an electrical path through the antenna and the installer.
- If any part of the antenna system should come in contact with a power line, do not touch it or try to remove it yourself. Call your local power company to have it removed safely.
- If an accident should occur with the power lines, call for qualified emergency help immediately.
- Assemble your new antenna on the ground or a level surface at the installation site.
- Connect its coaxial cable while you are on the ground and attach the antenna to the mast.
- Ensure that the mast does not fall as you raise or remove it. Use a durable non-conductive rope secured at each two foot level as the mast is raised. Have an assistant tend the rope, ready to pull the mast clear of any hazards (such as power lines) should it begin to fall.
- Use the mounting bracket provided with the antenna.
- If the installation will use guy wires:
  - Install guy anchor bolts.
  - Estimate the length of guy wire and cut it before raising the mast.
  - Attach guy wires to a mast using guy rings.
  - In the case of a guyed (tall, thin mast) installation, you must have at least one assistant to hold the mast upright while the guy wires are attached and tightened to the anchor bolts.
- Attach a “DANGER” label at eye level on the mast.
- Install ground rods to remove any static electricity buildup and connect a ground wire to the mast and ground rod. Use ground rods designed for that purpose, not a spare piece of pipe.

Unused Antenna Ports

Port plugs must be installed in any unused antenna ports.

The weatherproof caps on the connectors protect the router interior from environmental elements including water, heat, cold, and dust. They are installed on unused ports before the router is shipped.

When you install a new antenna in a port with an N-connector:

- Chassis-mounted antennas—Remove the weather proof cap before installing a chassis-mounted antenna.
- External antennas—Remove weatherproof cap, then connect the supported Cisco cable to the connector.

Installation Instructions

To install the Cisco 4G-ANTM-OM-CM antenna on a ceiling:

Step 1 Drill a 3/4” diameter hole in the ceiling where you want to mount the antenna.

Step 2 (Optional) Drill three pilot holes and insert the supplied screw anchors.

Note You can secure the antenna in place using only the mounting nut. However, for additional support, you can also use the supplied mounting screws. To use the mounting screws, you must first drill three pilot holes and insert the supplied screw anchors in place.

a) Insert the antenna's cable and thread through the hole you drilled in Step 1 until the base of the antenna is flush with the ceiling.
b) Using a pencil or pen, mark the screw positions on the ceiling.
c) Remove the antenna from the ceiling.
d) Using a 3/16" drill bit, drill three holes for the screw anchors.
e) Properly insert the three screw anchors into the pilot holes.

Step 3 Insert the antenna's cable and thread through the hole you drilled in Step 1 until the base of the antenna is flush with the ceiling.

Step 4 From above the ceiling:

a) Thread the supplied flat washer through the antenna's cable and thread..
b) Thread the supplied spring washer through the antenna's cable and thread.
c) Thread the supplied mounting nut through the antenna's cable.
d) Attach the mounting nut to the antenna's thread by manually turning the nut clockwise until the antenna is secured in place.
e) (Optional) Insert the mounting screws, then cover them with the white screw covers.

Step 5 Connect the antenna's cable to one of the supported extension cables.

To extend the coaxial cable included with your antenna, we recommend an ultra-low-loss coaxial cable for installation flexibility without a significant loss in range. The following table lists insertion loss information about ULL extension coaxial cables available from Cisco.

Table 14:

Cisco Product Number	Cable Length	Frequency Range	Insertion Loss
3G-CAB-ULL-20	20 foot (6 m)	500-2000 MHz	–1.50 dB, maximum
3G-CAB-ULL-50	50 foot (15 m)	500-2000 MHz	–3.50 dB, maximum
3G-CAB-LMR240-25	25 foot (7.5 m)	2200 MHz	–3.50 dB, maximum
3G-CAB-LMR240-50	50 foot (15 m)	2200 MHz	–6.90 dB, maximum
3G-CAB-LMR240-75	75 foot (23 m)	2200 MHz	–10.50 dB, maximum

The callouts in the following figure correspond to the steps listed above.

Figure 29: Installation Instructions for the Cisco 4G-ANTM-OM-CM Antenna

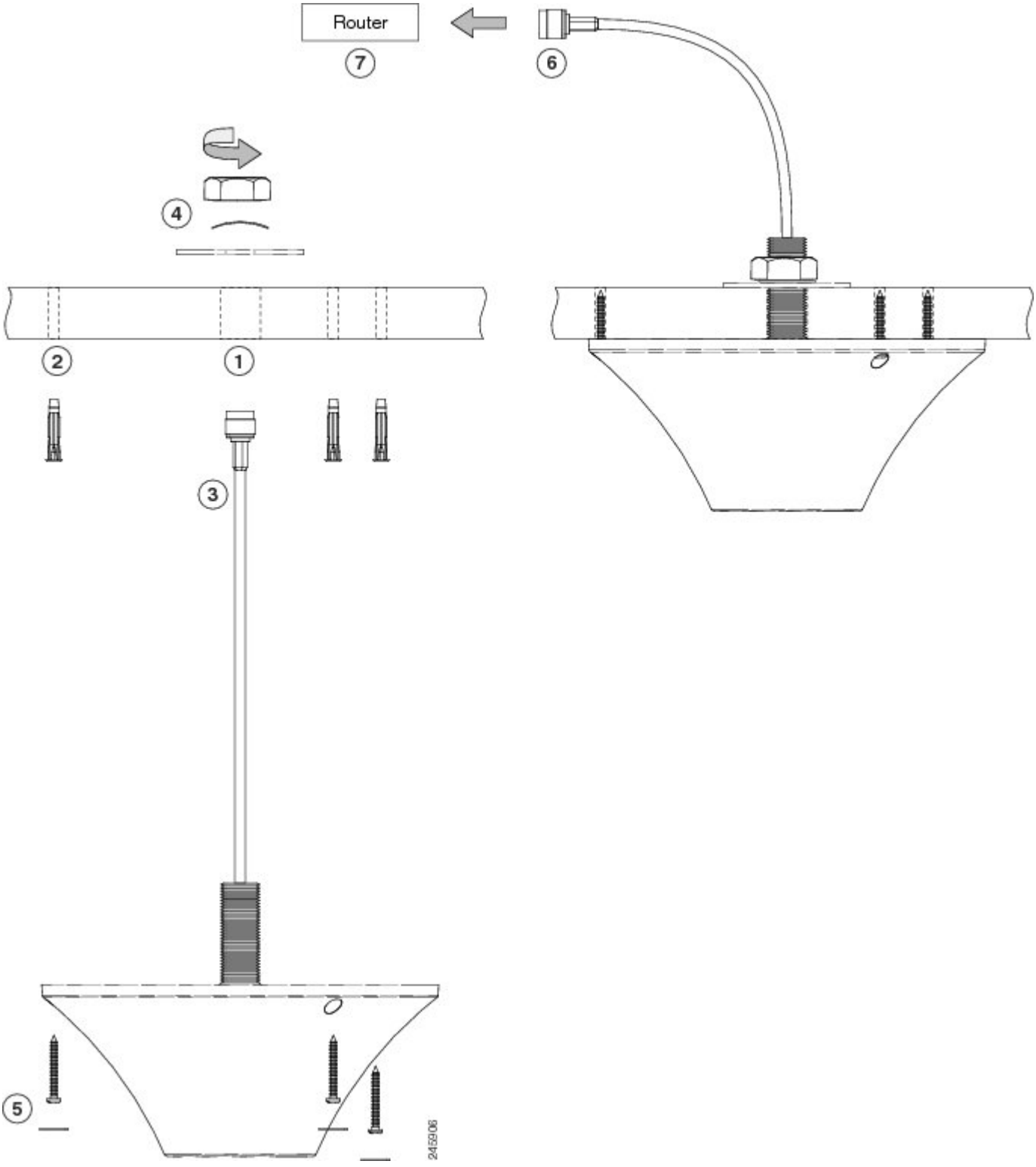

Communications, Services, and Additional Information

- To receive timely, relevant information from Cisco, sign up at Cisco Profile Manager.
- To get the business impact you're looking for with the technologies that matter, visit Cisco Services.
- To submit a service request, visit Cisco Support.
- To discover and browse secure, validated enterprise-class apps, products, solutions, and services, visit Cisco DevNet.
- To obtain general networking, training, and certification titles, visit Cisco Press.
- To find warranty information for a specific product or product family, access Cisco Warranty Finder.

Cisco Bug Search Tool

Cisco Bug Search Tool (BST) is a web-based tool that acts as a gateway to the Cisco bug tracking system that maintains a comprehensive list of defects and vulnerabilities in Cisco products and software. BST provides you with detailed defect information about your products and software.

Documentation Feedback

To provide feedback about Cisco technical documentation, use the feedback form available in the right pane of every online document.

Cisco Support Community

Cisco Support Community is a forum for you to ask and answer questions, share suggestions, and collaborate with your peers. Join the forum at https://supportforums.cisco.com/index.jspa.

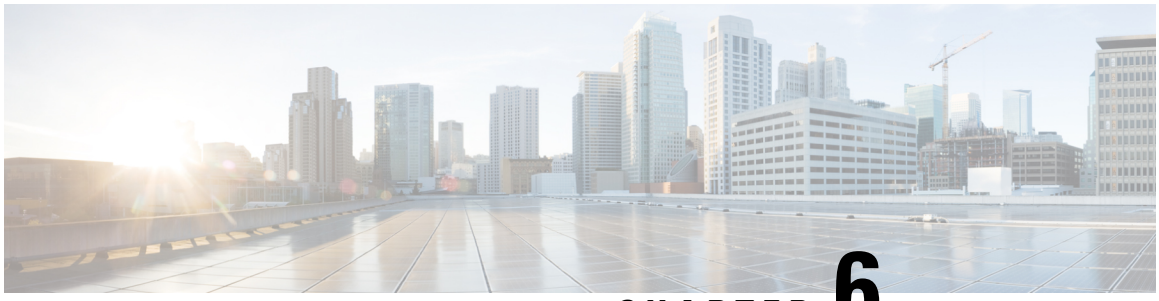

CHAPTER 6

Cisco 4G/3G Omnidirectional Dipole Antenna (4G-LTE-ANTM-D)

This chapter contains the following:

- Overview, on page 83
- Specifications, on page 85
- System Requirements, on page 89
- Installation Notes, on page 89
- General Safety Precautions, on page 90
- Guidelines to Achieving Optimal RF and Antenna Performance, on page 92
- Communications, Services, and Additional Information, on page 95

Overview

The 4G-LTE-ANTM-D omnidirectional dipole antenna is designed for indoor use with Cisco 4G and Cisco 3G wireless Integrated Services Routers Generation 2 (ISRs G2) and Enhanced High-Speed WAN Interface Cards (EHWICs).

The 4G-LTE-ANTM-D antenna is marked with a green band and the product ID (PID) to indicate that it supports 4G Long Term Evolution (LTE) networks. It has the following hardware features:

- **Articulating Joint**—It can be rotated 360 degrees and is capable of maneuvering into three stop positions: 0 degrees, 45 degrees, and 90 degrees.
- **Male threaded Neill-Concelman (TNC) Connector**—It lets you directly mount the antenna to any Cisco 4G and Cisco 3G wireless Integrated Services Router (ISR) EHWIC with a TNC connector (Figure 30: Cisco 4G-LTE-ANTM-D Ominidirectional Dipole Antenna, TNC Connector, and Articulation Joint, on page 84). The threads on the connector must comply with the ANSI 7/16-28 UNEF 2B thread specification.

Figure 30: Cisco 4G-LTE-ANTM-D Ominidirectional Dipole Antenna, TNC Connector, and Articulation Joint

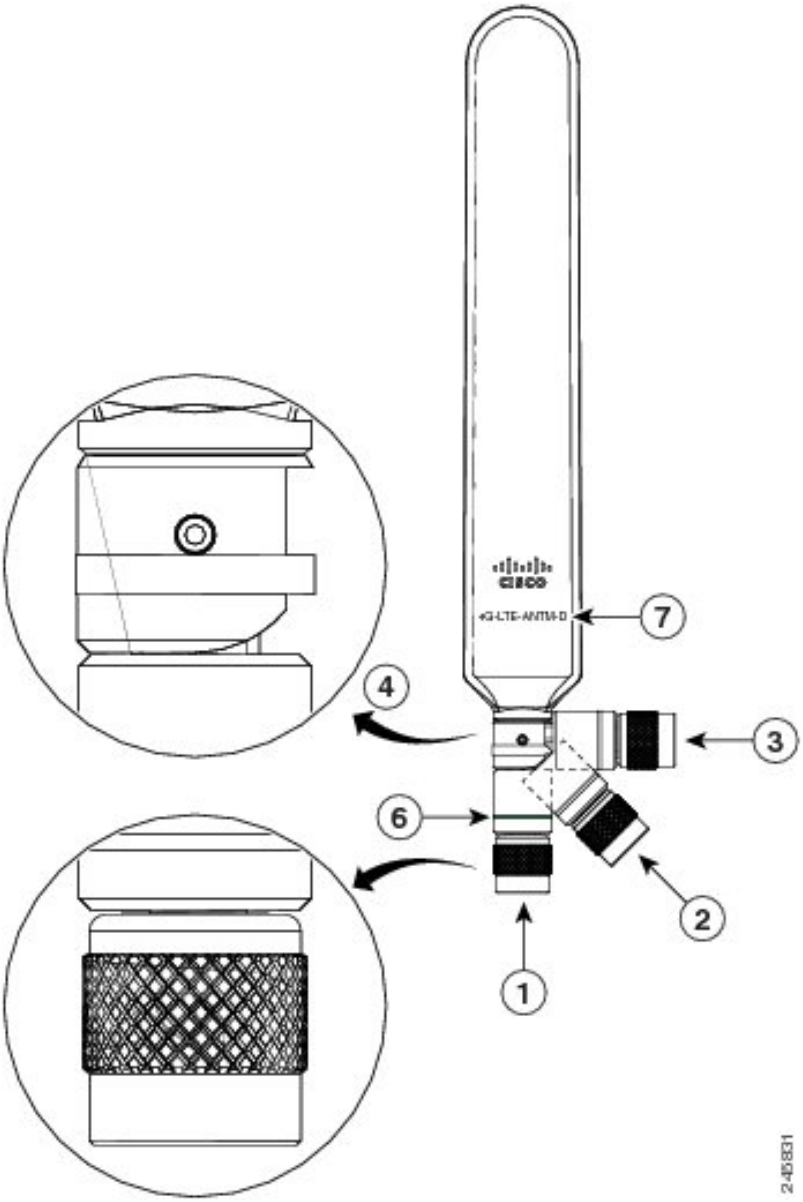

1	0 degree position	5	TNC connector
2	45 degree position	6	Green band
3	90 degree position	7	Product ID
4	Articulating joint		

Specifications

Table 15: Specifications for Cisco 4G-LTE-ANTM-D Antenna

Specification	Description
Maximum input power	3W
Connector	TNC male
VSWR	2.5:1 or less
Characteristic impedance	50 ohm
Antenna base and radome color	Cisco Raven Black
Antenna dimensions	9 (L) x 1.2 (W) x 7/16 in (D)(229 x 30.5 x 11 mm)
Operating temperature	–22° to 158°F (–30° to 70°C)
Operating frequency ranges	• 698–806 MHz • 824–894 MHz • 925–960 MHz • 1710–1885 MHz • 1920–1980 MHz • 2110–2170 MHz • 2500–2690 MHz
Efficiency	Antennas were designed and tested to high RF efficiency in all supported cellular bands. Detailed technical specifications can be obtained through your Cisco authorized partner or Cisco account representative.
Maximum Peak Gain	2 dBi

Figure 31: Elevation Cut (AMPS) Phi 0 Degree Plane for Cisco 4G-LTE-ANTM-D

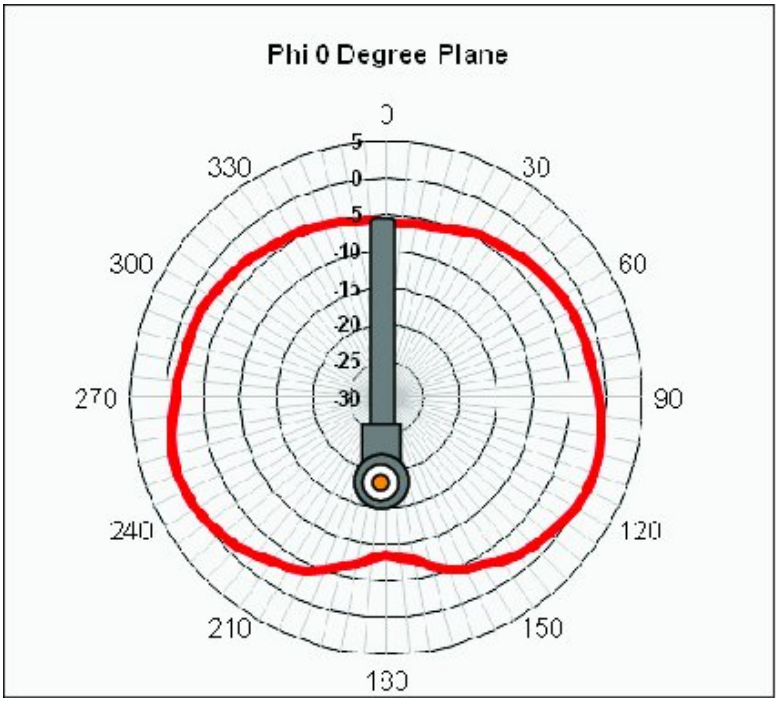

Figure 32: Elevation Cut (AMPS) Phi 90 Degree Plane for Cisco 4G-LTE-ANTM-D

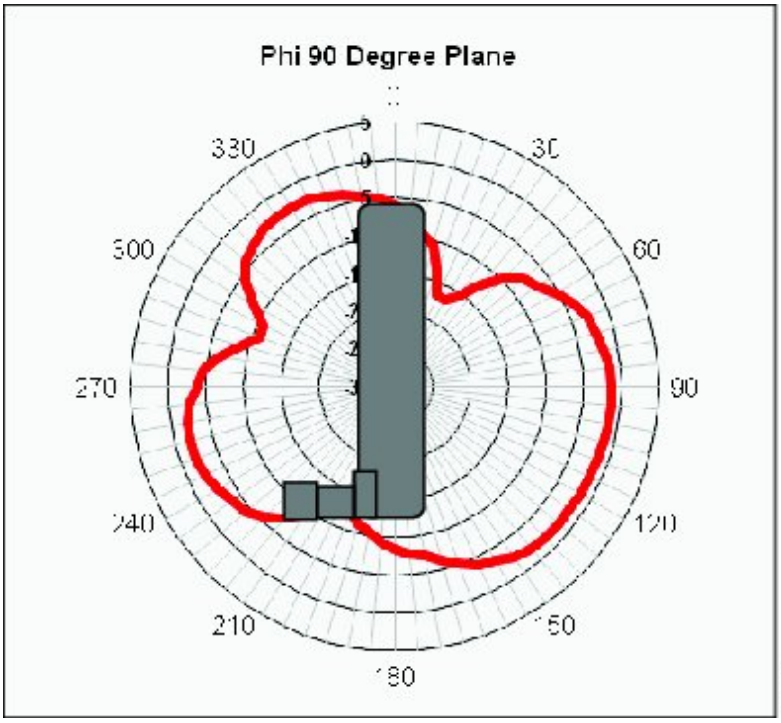

Figure 33: Azimuth Cut (AMPS) for Cisco 4G-LTE-ANTM-D

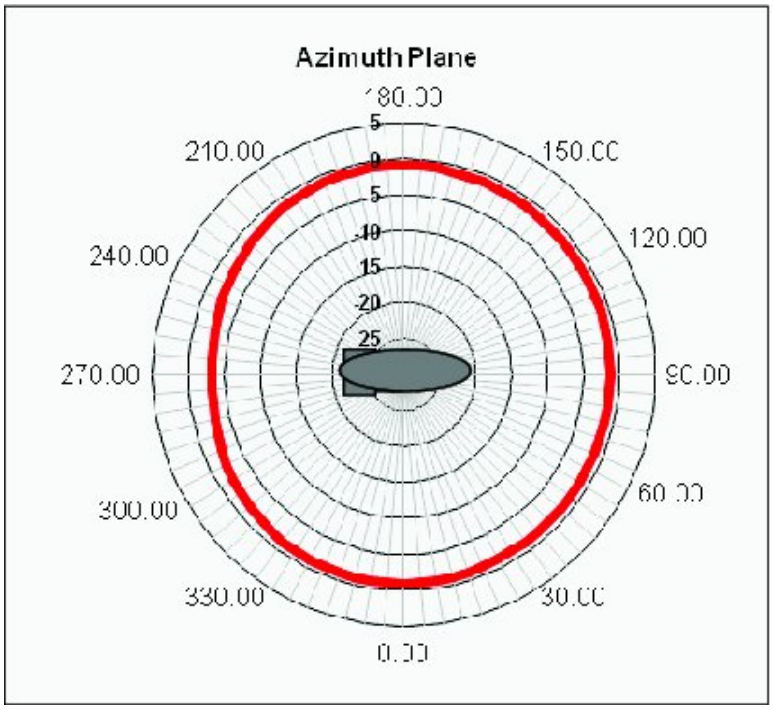

Figure 34: Elevation Cut (PCS) Phi 0 Degree Plane for Cisco 4G-LTE-ANTM-D

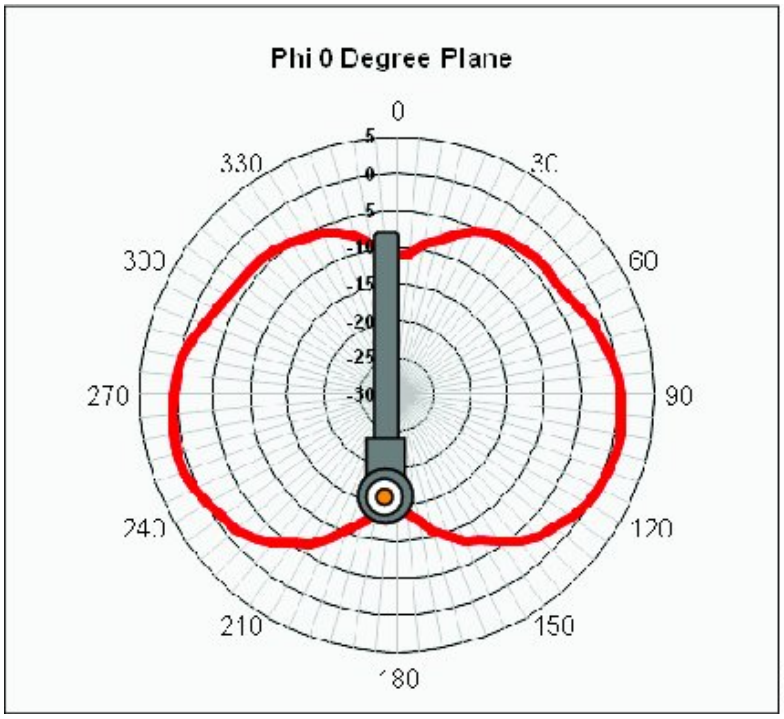

Figure 35: Elevation Cut (PCS) Phi 90 Degree Plane for Cisco 4G-LTE-ANTM-D

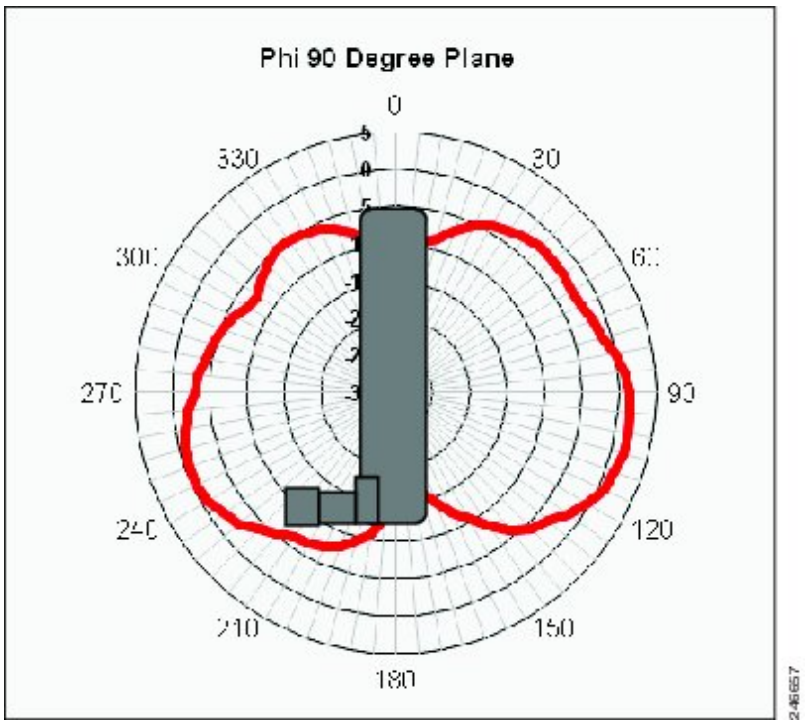

Figure 36: Azimuth Cut (PCS) for Cisco 4G-LTE-ANTM-D

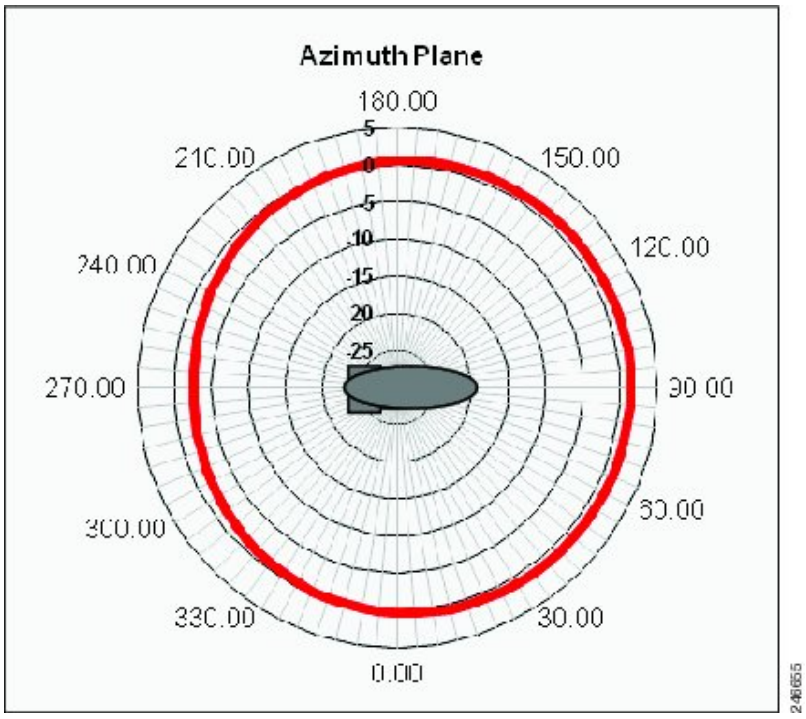

System Requirements

The Cisco 4G/3G omnidirectional dipole antenna is designed to be used with any Cisco 4G and Cisco 3G wireless ISRs G2 and EHWICs with a TNC antenna connector. The threads on this connector must comply with ANSI 7/16-28 UNEF 2B thread specification. The antenna is designed to be used only indoors.

Installation Notes

This antenna is designed to be mounted directly to any Cisco 4G and Cisco 3G wireless ISR and EHWIC with a TNC connector by simply threading it onto the mating connector. Mount and deploy the antenna at the 0-degree position, 45-degree position, or the 90-degree position, and then change that position at will. The rotation of the antenna into the proper position can take place while the antenna is still loose on the mating connector. No software is required for this installation.



Caution Do not install this antenna in an outdoor environment.

In addition to the antenna orientation, the installation location of the wireless EHWIC plays a significant role in determining overall network performance with respect to all the wireless clients. Clients at the farthest coverage points might have 10 to 50 percent of the bandwidth available to clients close to the antenna. Wireless network coverage in one area or location might need to be lowered to improve the performance for clients in other areas or locations.

Because antennas both transmit and receive radio signals, their performance can be adversely affected by the surrounding environment, including physical obstructions or radio frequency (RF) interference.

Follow these guidelines to ensure the best possible performance:

- When used on an EHWIC, always mount the antenna on an appropriate extension cable and antenna stand. The antenna performance will not be optimal if mounted directly to an EHWIC. Mounting directly to a fixed router (without an EHWIC) is allowed.
- Space multiple antennas apart by at least 17 inches (43 cm). Interference may occur when placed closely together.
- Observe the radiation patterns to position the antennas for best coverage.
- Wherever possible, mount the EHWIC and antenna where the wireless devices are within sight and without physical obstructions. Barriers along the line of sight between the device and the local base station will degrade the wireless radio signals. EHWICs and antennas should be installed above floor level in office environments or near the ceiling for better performance because most obstructions tend to be near floor level.



Caution Install the EHWIC and any antennas away from appliances that share the same frequency bands. Microwave ovens, cordless telephones, and security monitors can temporarily interfere with wireless performance.

Caution We recommend avoiding installing wireless antennas in or near rack-mounted equipment that include networking equipment and computer servers whose radiated noise emissions can severely degrade radio performance.

Note If the desired installation site has a marginally acceptable level of radiated noise emissions, consider using a remote-mounted antenna, such as a wall-mount or ceiling-mount antenna, for better radio performance and coverage.

General Safety Precautions

Warning This warning symbol means danger. You are in a situation that could cause bodily injury. Before you work on any equipment, be aware of the hazards involved with electrical circuitry and be familiar with standard practices for preventing accidents. Use the statement number provided at the end of each warning to locate its translation in the translated safety warnings that accompanied this device. **Statement 1071**

Warning Do not work on the system or connect or disconnect cables during periods of lightning activity. **Statement 1001**

Warning Do not locate the outdoor antenna near overhead power lines or other electric light or power circuits, or where it can come into contact with such circuits. When installing the antenna, take extreme care not to come into contact with such circuits, as they may cause serious injury or death. For proper installation and grounding of the antenna, please refer to national and local codes (for example, U.S.:NFPA 70, National Electrical Code, Article 810, Canada:Canadian Electrical Code, Section 54). **Statement 1052**

Warning In order to comply with FCC radio frequency (RF) exposure limits, antennas should be located at a minimum of 7.9 inches (20 cm) or more from the body of all persons. **Statement 332**

Note For your safety, and to help you achieve a good installation, please read and follow these safety precautions.

Mast Mounted or Building Mounted Installations

The following instructions are common to most mast mounted or building mounted installations. For specific installation instructions for each antenna, see the antenna data-sheet and the router hardware installation guide.

- Find someone to help you—installing an antenna is often a two-person job.

- Select your installation site with safety, as well as performance, in mind. Remember that electric power lines and phone lines look alike. For your safety, assume that any overhead line can kill you.
- Contact your electric power company. Tell them your plans and ask them to come look at your proposed installation.
- Do not use a metal ladder.
- Do not work on a wet or windy day.
- Do dress properly—wear shoes with rubber soles and heels, rubber gloves, and a long-sleeved shirt or jacket.
- If the assembly starts to drop, move away from it and let it fall. Because the antenna, mast, cable, and metal guy wires are all excellent conductors of electrical current, even the slightest touch of any of these parts to a power line completes an electrical path through the antenna and the installer.
- If any part of the antenna system should come in contact with a power line, do not touch it or try to remove it yourself. Call your local power company to have it removed safely.
- If an accident should occur with the power lines, call for qualified emergency help immediately.
- Assemble your new antenna on the ground or a level surface at the installation site.
- Connect its coaxial cable while you are on the ground and attach the antenna to the mast.
- Ensure that the mast does not fall as you raise or remove it. Use a durable non-conductive rope secured at each two foot level as the mast is raised. Have an assistant tend the rope, ready to pull the mast clear of any hazards (such as power lines) should it begin to fall.
- Use the mounting bracket provided with the antenna.
- If the installation will use guy wires:
    - Install guy anchor bolts.
    - Estimate the length of guy wire and cut it before raising the mast.
    - Attach guy wires to a mast using guy rings.
    - In the case of a guyed (tall, thin mast) installation, you must have at least one assistant to hold the mast upright while the guy wires are attached and tightened to the anchor bolts.
- Attach a “DANGER” label at eye level on the mast.
- Install ground rods to remove any static electricity buildup and connect a ground wire to the mast and ground rod. Use ground rods designed for that purpose, not a spare piece of pipe.

Unused Antenna Ports

Port plugs must be installed in any unused antenna ports.

The weatherproof caps on the connectors protect the router interior from environmental elements including water, heat, cold, and dust. They are installed on unused ports before the router is shipped.

When you install a new antenna in a port with an N-connector:

- Chassis-mounted antennas—Remove the weather proof cap before installing a chassis-mounted antenna.

- External antennas—Remove weatherproof cap, then connect the supported Cisco cable to the connector.

Guidelines to Achieving Optimal RF and Antenna Performance

Antennas are a critical component of a wireless communication system. Selecting a suitable antenna, an optimal antenna location, or antenna site is essential for optimum performance of a wireless links.

This section covers general tips for optimizing RF performance of indoor and outdoor terrestrial radio systems in the 400-7125 MHz frequency range. Examples of terrestrial radio systems include 4G LTE, 5G NR, Wi-Fi, LoRa, LR-WPAN and similar. In this context GPS SPS would not be considered a terrestrial system as the signal is received from space, not from another terrestrial site.

Because the antenna transmits and receives radio signals over the air, overall RF performance of the link is susceptible to RF obstructions and common sources of RF interference that can reduce throughput and range of the system.

Follow these guidelines to optimize performance. When in doubt, consult a qualified RF professional, and check with your solution partner for specific recommendations.

Antenna Model Selection and Performance

Consider the following when planning your installation:

- When selecting the antenna, ensure that it covers the frequency ranges or frequency bands of interest, and that it has good RF parameters such as antenna efficiency, VSWR and suitable radiation pattern for every frequency range that your application will use with this antenna.
- Antenna pattern is important. Omni-directional antennas have lower gain, but allow communicating to devices in all azimuth directions. Directional antennas concentrate the beam in a specific direction, making them ideal for point to point communication.
- When a system has multiple RF ports for receive and / or transmit, as is the case for 4G LTE , 5G NR or Wi-Fi, it is highly recommended to populate all the RF ports with suitable antennas to take advantage of MIMO, rather than rely on a single port or single antenna to save on cost. Please see the MIMO section for a detailed description of MIMO benefits.
- For RF systems that support multiple RF ports and multiple RF standards such as LTE, Wi-Fi, and GPS: consider using a multi-element antenna that integrates multiple antennas under the same radome (cover). Doing so may reduce cost compared to deploying and mounting a discrete single port antenna for every RF port.
- For communication between fixed infrastructure devices, such as mesh nodes or a point-to-point backhaul link, each device should have an antenna with the same polarization. If communicating with mobile devices that might be randomly oriented, consider dual-polarized antennas, such as those with both vertical and horizontal or slant +45° and -45° polarized elements.

Antenna Environmental Specifications

The selected antenna must have suitable mechanical and environmental specifications for the environment where it will be deployed. For example, shock and vibration specifications for transportation, corrosion resistant construction for marine and oil and gas industries, or IP (ingress protection) rating for outdoor deployment. Indoor antennas are typically not suitable for harsh industrial environments. Please check with your system integrator for environmental requirements for your application.

Antenna Accessories and Mounting

Consider the following when planning your installation:

- Carefully consider what type of other RF accessories, besides antenna, such as RF cables, lightning arrestors or RF adapters may be required in your installations. It is best to minimize long RF cable runs due to RF signal losses in the cable. Thinner RF cables have more RF loss , thicker cables are less flexible and more expensive.
- Carefully consider how the antenna will be physically mounted, as this may affect antenna selection. For example, a stud mount mechanical mounting design is a better fit for mounting on top of an electrical cabinet than a mast mount antenna.
- For outdoor deployments, follow installation instructions for the antenna. It is good practice to keep protective covers on the radio's RF ports and any antenna or accessory RF ports until the moment the interfaces are mated. This reduces chances of contamination, trapping water or condensation inside the connector, or accidental damage to RF interfaces.

MIMO Performance and Arrays

MIMO systems deliver benefits of higher SNR, higher reliability and higher throughput compared to single antenna systems. In more technical terms, MIMO delivers array gain, diversity gain and multiplexing gain compared to single antenna.

- Array gain — Improvement in SNR (signal to noise ratio) by coherently combining signals from multiple antennas. For example, increasing SNR through beamforming techniques.
- Diversity gain — Improvement in reliability by mitigating deep fading or strong destructive EM wave interference. For example, in a two-antenna system, if one antenna is experiencing deep fading due to an EM destructive null at its location at a given instant, the other antenna is unlikely to have a null at the same instant, and the combined SNR stays at a reliable level. In contrast, a single antenna would see SNR oscillating between good SNR and very poor SNR and reliability would degrade.
- Multiplexing gain — Increase in system capacity or throughput by sending independent data over multiple spatial streams simultaneously. The number of streams cannot be more than the number of antennas. For example, to support three spatial streams, a minimum of three antennas is required. Often there may be additional antennas for diversity or redundancy, such as in the case of 4x4:3, or 4x4 MIMO with 3 spatial streams.

If deploying multiple single-element antennas for a MIMO system in an array, ensure sufficient spacing between the antennas. Omnidirectional elements should generally be at least one wavelength apart at the lowest operating frequency.

Consider the following:

- For Wi-Fi systems operating in the 2.4, 5, and/or 6 GHz bands, space elements at least 5 inches (12.5 cm) apart.
- For 4G LTE and 5G systems with the lowest operating frequency of 617 MHz , space elements at least 20 inches (50 cm) apart.
- Note that spacing between elements inside multi-element MIMO antennas is often less than one wavelength. However multi-element antennas are engineered with MIMO performance in mind, by providing antenna diversity through pattern, polarization, and isolation between MIMO elements.

Antenna siting and location

Consider the following when planning your installation:

- Plan antenna location ahead of time. Ideal location for an antenna is in LOS (line of sight) of the counterpart that it is trying to communicate with. Under LOS conditions the signals propagate directly between the two communication nodes, without relying on signal bouncing off a wall or other structure to reach the counterpart. This is sometimes not possible to achieve in practice, but it is a useful goal to keep in mind when optimizing antenna location.
- While it is good to keep RF cables short, it is most desirable for an antenna to be in the best location it can be to provide the desired coverage.
- For large deployments involving multiple units communicating with each other across a complex urban or industrial landscape, consider running an RF propagation modeling study to predict approximate simulated coverage maps and determine initial placement of the units. A propagation study may help reduce overall deployment cost by discovering and mitigating issues with RF coverage before the infrastructure is physically installed.
- Keep the antenna away from metal obstructions such as heating and air-conditioning ducts, large ceiling trusses, building superstructures, and major power cabling runs. One exception is if the antenna is designed to be mounted on a ground plane. If mounting on a ground plane, mount the antenna on a flat metal surface away from adjacent obstructions.
- It is strongly recommended not to install antennas directly on the router or access point (AP), unless the router or AP is specifically engineered to directly mount the antennas. Products that are engineered for direct mounting of antennas specifically address each of the below issues.
- Reasons to mount antennas away from the router include:
  - Router location may not be optimal location for antenna to communicate with the counterpart wirelessly, so router and antenna may need to be in different locations.
  - Router may have a clutter of Ethernet cable and power cables around it, which will obstruct antenna signal.
  - A number of routers, such as the IR1835, are modular. They have plug-in RF modules for Wi-Fi , 4G LTE or 5G NR such as WP-WIFI6, P-LTEAP18-GL, P-5GS6-GL. These modules have RF connectors spaced close together, and while it is mechanically possible to install four or five antennas directly attached, this will result in significant degradation to RF performance of antennas due to mutual de-tuning between closely spaced antennas. It is strongly recommended to install antennas away from the chassis in modular cases.
- If installing an antenna indoors, consider that the density and electromagnetic properties of the materials used in the building construction determines the number of walls the signal can pass through and still maintain adequate coverage.
  - Paper and vinyl walls have very little effect on signal penetration.
  - Solid and pre-cast concrete walls limit signal penetration to one or two walls without degrading coverage.
  - Concrete and wood block walls limit signal penetration to three or four walls.
  - A signal can penetrate five or six walls constructed of drywall or wood.
  - A thick metal wall causes signals to reflect off, causing poor penetration.

- A chain link fence or wire mesh spaced between 1 and 1 1/2 in. (2.5 and 3.8 cm) acts as a harmonic reflector that blocks a 2.4-GHz radio signal.
- Install the antenna away from microwave ovens and 2-GHz cordless phones. These products can cause signal interference because they operate in the same frequency range as the device your antenna is connected to.

Communications, Services, and Additional Information

- To receive timely, relevant information from Cisco, sign up at Cisco Profile Manager.
- To get the business impact you're looking for with the technologies that matter, visit Cisco Services.
- To submit a service request, visit Cisco Support.
- To discover and browse secure, validated enterprise-class apps, products, solutions, and services, visit Cisco DevNet.
- To obtain general networking, training, and certification titles, visit Cisco Press.
- To find warranty information for a specific product or product family, access Cisco Warranty Finder.

Cisco Bug Search Tool

Cisco Bug Search Tool (BST) is a web-based tool that acts as a gateway to the Cisco bug tracking system that maintains a comprehensive list of defects and vulnerabilities in Cisco products and software. BST provides you with detailed defect information about your products and software.

Documentation Feedback

To provide feedback about Cisco technical documentation, use the feedback form available in the right pane of every online document.

Cisco Support Community

Cisco Support Community is a forum for you to ask and answer questions, share suggestions, and collaborate with your peers. Join the forum at https://supportforums.cisco.com/index.jspa.

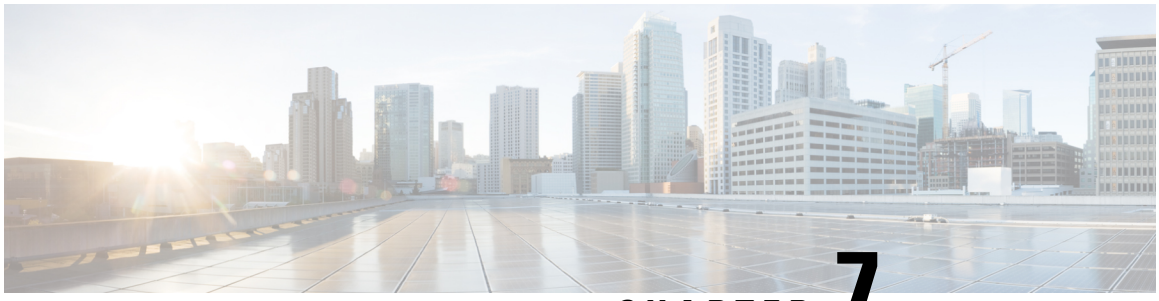

CHAPTER 7

Cisco Dual LTE-Single GPS Multi-band Antenna Installation Guide (4G-LTE-ANTM-O-3-B)

This chapter contains the following:

- Overview, on page 97
- Supported Antennas, on page 105
- Supported Antenna Accessories, on page 105
- Antenna Options by Deployment Type, on page 105
- General Safety Precautions, on page 106
- Guidelines to Achieving Optimal RF and Antenna Performance, on page 108
- Installation Instructions, on page 111
- Deployment Scenarios, on page 113
- Communications, Services, and Additional Information, on page 115

Overview

This section provides the description, supported features, and installation instructions of the Cisco Dual LTE-Single GPS Multi-band (4G-LTE-ANTM-O-3-B) Antenna.

Caution Read the information in the installation instructions before installing or replacing antennas.

Deciding which antenna to use involves multiple factors, such as coverage area, maximum distance, indoor location, outdoor location, and antenna height.

When an antenna is used indoors, the building construction, ceiling height, and internal obstructions must be considered. In outdoor environments, obstructions such as trees, vehicles, buildings, and hills must be considered. Distance is the primary factor when using outdoor-wireless communications. However, coverage area also becomes important when you use wireless client devices to communicate with a wireless device.

4G-LTE-ANTM-O-3-B antenna is an integrated 3-in-1- indoor and outdoor antenna. It comes with two Long Term Evolution (LTE) antennas and one Global Positioning System (GPS) antenna in a single radome. The following graphic shows the 4G-LTE-ANTM-O-3 antenna.

Figure 37: 4G-LTE-ANTM-O-3 Antenna



Parts List

The shipment of your antenna includes the following items:

- One Antenna Unit
- Two SMA-Female to TNC-Male Adapters
- Installation Guide

Features of the 4G-LTE-ANTM-O-3-B Antenna

The 4G-LTE-ANTM-O-3-B antenna supports the following features:

- No tune, multiband coverage, dual 4G LTE, and GPS L1 frequencies.
- Metal 5/8-inch stud mount with serrated face nut provides single cable exit for easier installation or antenna replacement.
- Attractive low-profile housing for added overhead clearance.
- IP67-compliant design provides maximum protection against water or dust under severe environmental conditions.

- High-performance, low-loss cable, and high-quality connectors for maximum Radio Frequency (RF) system efficiency.
- UV-resistant red, blue, black, or white radome.

Technical Specifications

The following table lists the specifications for the RF antenna.

Table 16: Specifications of RF antenna

Operating Frequencies	698-960 MHz 1710-2700 MHz
Polarization	Vertical, linear
Nominal Impedance	50 Ohms
Gain(Typical) **Note 1**	2.5 dBi
Maximum Power	3 Watts
VSWR **Note 2**	< 2.5:1
Elevation Plane (3 dB Beamwidth) **Note 3**	30° (nominal)
Azimuth Plane (3 dB Beamwidth)	Omni-directional
Connector type	SMA-Male
Cable	4 foot RG174 VW-1 compliant
Height	90 mm
Base Diameter	137 mm
Color	White, Black, Red or Blue
Flammability	UL-94 V0
Environment	Indoor and outdoor
Mounting	5/8 inch lug with serrated face nut, optional adhesive backing (peel-off), 17 sq. inches area (minimum) on a flat smooth surface, 5/8 inch diameter hole through mounting surface
Operating and storage temperature	-40 to +85 degree C
Ingress Protection **Note 3**	IP67

Note 1: Total gain, free space test when mounted on a 1-foot diameter ground plane with unused ports loaded.

Note 2: Free space Voltage Standing Wave Ratio (VSWR) over all operating frequency ranges when mounted on a 1-foot diameter ground plane with unused ports loaded.

Note 3: When mounted per installation instructions.

The following table lists the specifications for the GPS Antenna.

Table 17: Specifications of the GPS Antenna

Frequency Band	1575.42 MHz (GPS L1)
Amplifier Gain	26 dBc ± 3 dB
Nominal Impedance	50 Ohms
Output VSWR	1.5:1 typical
DC Current	20 mA nominal; < 30 mA @ -40°C to +85° C
DC Voltage	3.3-5 V
Noise Figure	1.8 dB typical
Filtering	> 40 dB rejection @ ± 50 MHz from center frequency

The following graphic shows the parts of 4G-LTE-ANTM-O-3-B Antenna.

Figure 38: Parts of 4G-LTE-ANTM-O-3-B Antenna

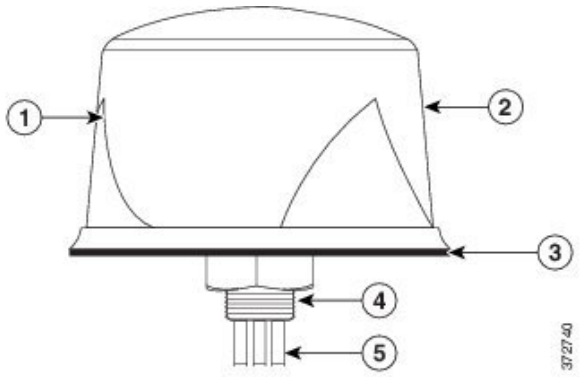

1	GPS and 2 LTE antennas inside	4	Mounting stud
2	Radome available in 4 colors: White, Black, Red or Blue (Indoor or Outdoor)	5	Cables
3	Gasket		

The following graphic shows the antenna with cable labels.

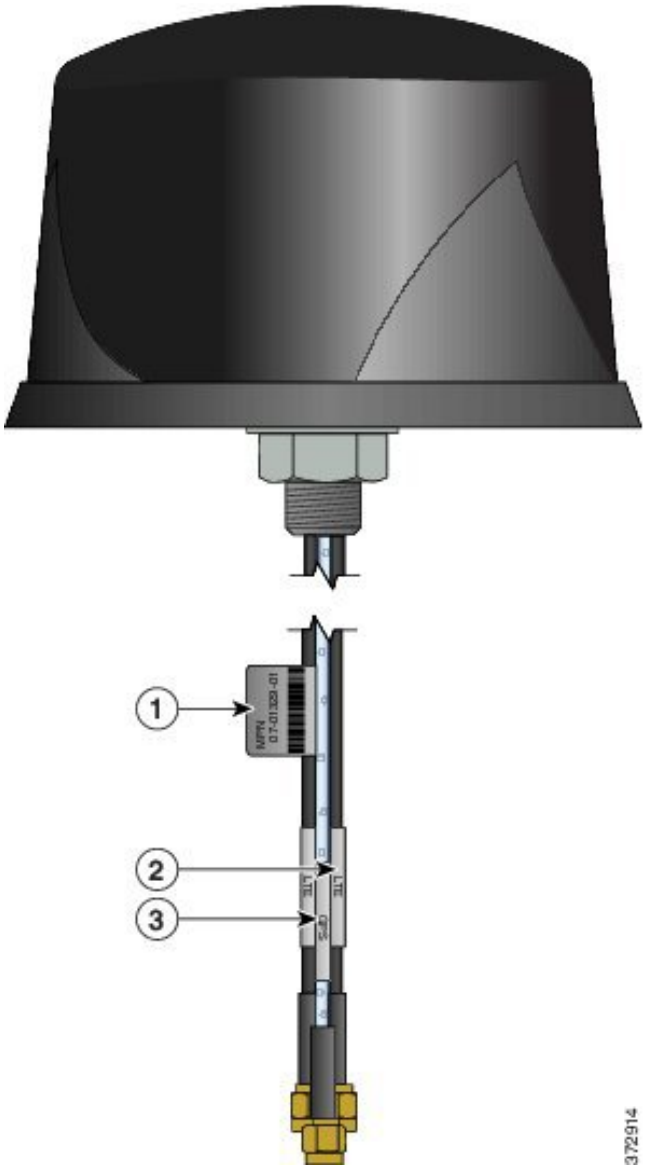

1	MPN LABEL	2	LTE-ID LABEL 2EA
3	GPS ID LABEL		

The following figure shows the Low Band 698-960 MHz EL (PHI=0).

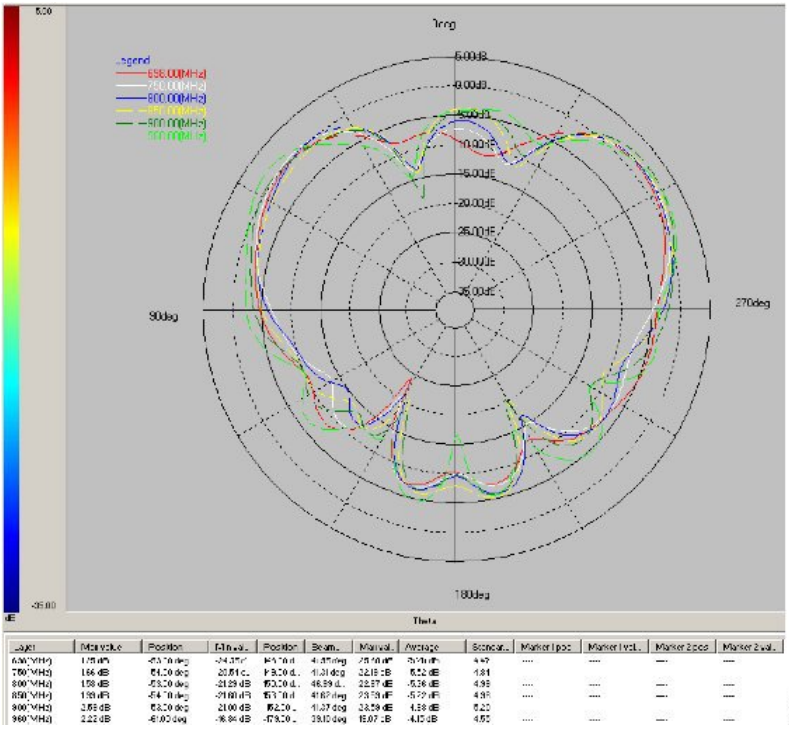

The following figure shows the Low Band 698-960 MHz EL (PHI=90).

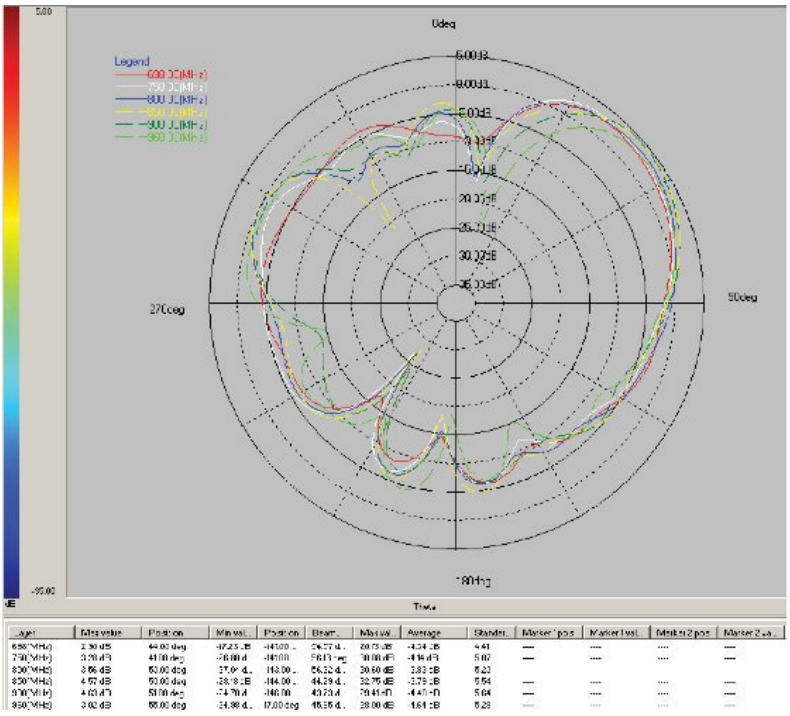

The following figure shows the Low Band 698-960 MHz AZ (THETA=90).

Figure 39: Low Band 698-960 MHz AZ (THETA=90)

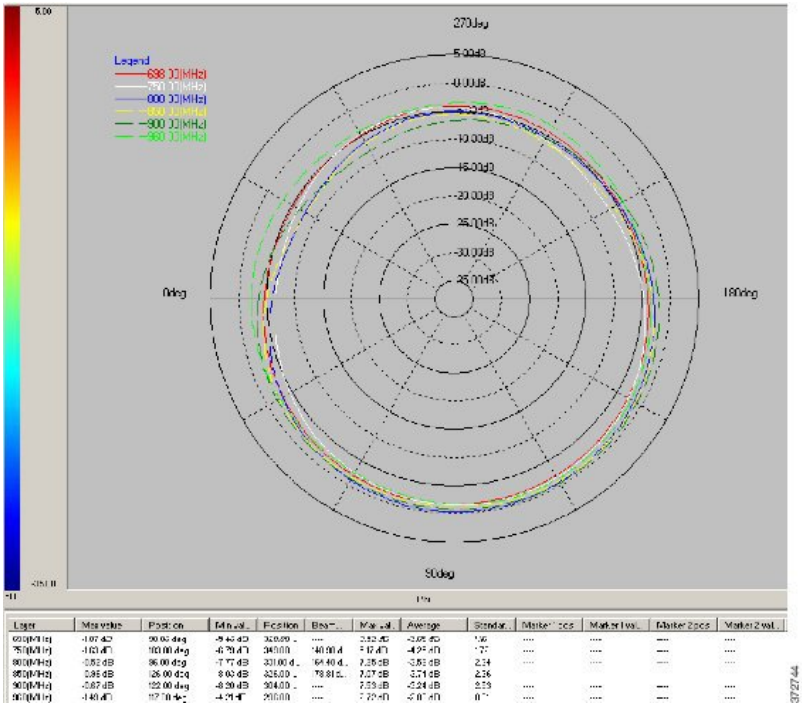

The following figure shows High Band 1710-2700 MHz EL (PHI=0).

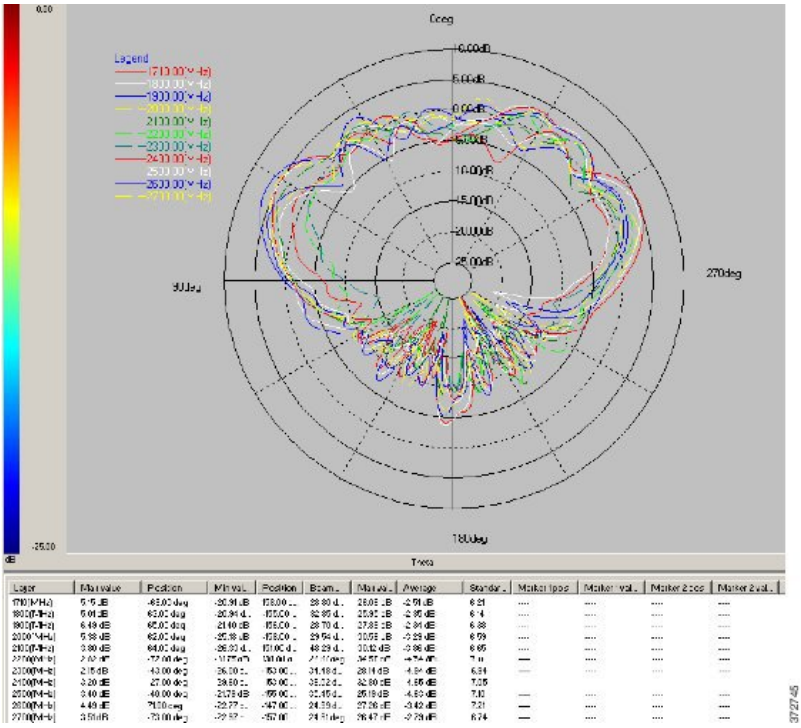

The following figure shows High Band 1710-2700 MHz EL (PHI=90).

Figure 40: High Band 1710-2700 MHz EL (PHI=90)

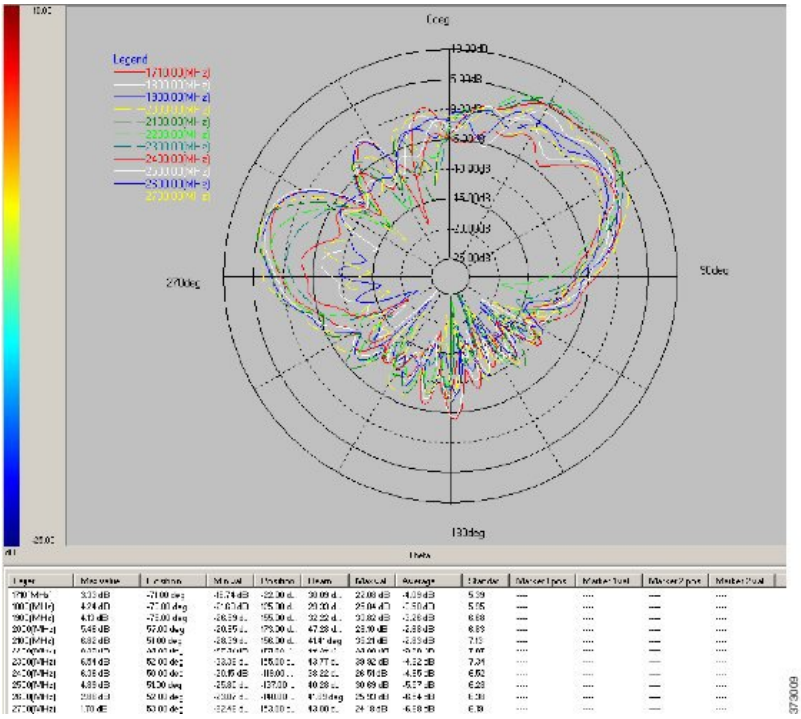

The following figure shows High Band 1710-2700 MHz AZ (THETA=90).

Figure 41: High Band 1710-2700 MHz AZ (THETA=90)

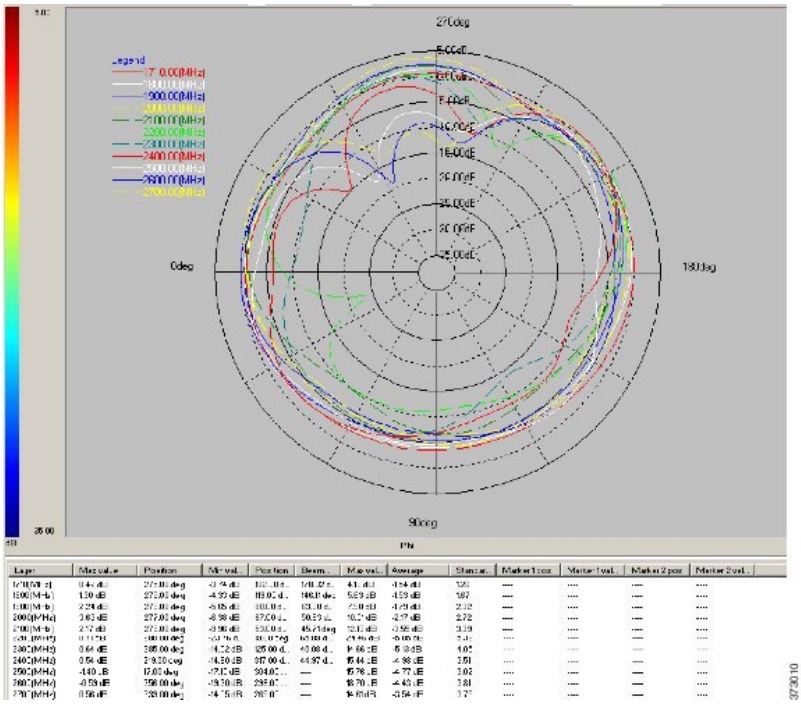

Supported Antennas

The following table lists the supported antennas.

Table 18: Supported Antennas

Part Number	Description
4G-LTE-ANTM-O-3-W	Indoor or outdoor low-profile antenna with 4-foot dongle, white radome.
4G-LTE-ANTM-O-3-B	Indoor or outdoor low-profile antenna with 4-foot dongle, black radome.
4G-LTE-ANTM-O-3-R	Indoor or outdoor low-profile antenna with 4-foot dongle, red radome.
ANT-4G-SR-OUT-TNC	Multiband low-profile saucer outdoor 4G Antenna
4G-LTE-ANTM-O-3-C	Indoor or outdoor low-profile antenna with 4-foot dongle, blue radome.

Supported Antenna Accessories

The following table lists the supported antenna accessories.

Table 19: Supported Antenna Accessories

Part Number	Cable Length	Maximum Insertion Loss
4G-CAB-LMR240-25	25 foot (7.5 m)	2.1 dB @ 700 MHz 4.0 dB @ 2.6 GHz
4G-CAB-LMR240-50	50 foot (15 m)	4.1 dB @ 700 MHz 7.4 dB @ 2.6 GHz
4G-CAB-LMR240-75	75 foot (23 m)	6.1 dB @ 700 MHz 11.0 dB @ 2.6 GHz
4G-CAB-ULL-20	20 foot (6 m)	0.90 dB @ 700 MHz 1.8 dB @ 2.6 GHz
4G-CAB-ULL-50	50 foot (15 m)	2.2 dB @ 700 MHz 4.3 dB @ 2.6 GHz

Antenna Options by Deployment Type

The following table lists the antenna options by deployment type.

Table 20: Antenna Options by Deployment Type

Deployment Type	Description	Antenna Accessories Required
Indoor	The antenna is installed indoors on a grounded metal surface and attached directly to a router.	None
Indoor, with extension	The antenna is installed on a grounded metal surface and attached to a router with extension cables.	• 4G-CAB-LMR240-25 • 4G-CAB-LMR240-50 • 4G-CAB-LMR240-75 • 4G-CAB-ULL-20 • 4G-CAB-ULL-50
Outdoor flush	The antenna is installed outdoors to a grounded metal surface and attached directly to a router mounted indoors.	None

General Safety Precautions

Warning This warning symbol means danger. You are in a situation that could cause bodily injury. Before you work on any equipment, be aware of the hazards involved with electrical circuitry and be familiar with standard practices for preventing accidents. Use the statement number provided at the end of each warning to locate its translation in the translated safety warnings that accompanied this device. **Statement 1071**

Warning Do not work on the system or connect or disconnect cables during periods of lightning activity. **Statement 1001**

Warning Do not locate the outdoor antenna near overhead power lines or other electric light or power circuits, or where it can come into contact with such circuits. When installing the antenna, take extreme care not to come into contact with such circuits, as they may cause serious injury or death. For proper installation and grounding of the antenna, please refer to national and local codes (for example, U.S.:NFPA 70, National Electrical Code, Article 810, Canada:Canadian Electrical Code, Section 54). **Statement 1052**

Warning In order to comply with FCC radio frequency (RF) exposure limits, antennas should be located at a minimum of 7.9 inches (20 cm) or more from the body of all persons. **Statement 332**

Note For your safety, and to help you achieve a good installation, please read and follow these safety precautions.

Mast Mounted or Building Mounted Installations

The following instructions are common to most mast mounted or building mounted installations. For specific installation instructions for each antenna, see the antenna data-sheet and the router hardware installation guide.

- Find someone to help you—installing an antenna is often a two-person job.
- Select your installation site with safety, as well as performance, in mind. Remember that electric power lines and phone lines look alike. For your safety, assume that any overhead line can kill you.
- Contact your electric power company. Tell them your plans and ask them to come look at your proposed installation.
- Do not use a metal ladder.
- Do not work on a wet or windy day.
- Do dress properly—wear shoes with rubber soles and heels, rubber gloves, and a long-sleeved shirt or jacket.
- If the assembly starts to drop, move away from it and let it fall. Because the antenna, mast, cable, and metal guy wires are all excellent conductors of electrical current, even the slightest touch of any of these parts to a power line completes an electrical path through the antenna and the installer.
- If any part of the antenna system should come in contact with a power line, do not touch it or try to remove it yourself. Call your local power company to have it removed safely.
- If an accident should occur with the power lines, call for qualified emergency help immediately.
- Assemble your new antenna on the ground or a level surface at the installation site.
- Connect its coaxial cable while you are on the ground and attach the antenna to the mast.
- Ensure that the mast does not fall as you raise or remove it. Use a durable non-conductive rope secured at each two foot level as the mast is raised. Have an assistant tend the rope, ready to pull the mast clear of any hazards (such as power lines) should it begin to fall.
- Use the mounting bracket provided with the antenna.
- If the installation will use guy wires:
    - Install guy anchor bolts.
    - Estimate the length of guy wire and cut it before raising the mast.
    - Attach guy wires to a mast using guy rings.
    - In the case of a guyed (tall, thin mast) installation, you must have at least one assistant to hold the mast upright while the guy wires are attached and tightened to the anchor bolts.
- Attach a “DANGER” label at eye level on the mast.
- Install ground rods to remove any static electricity buildup and connect a ground wire to the mast and ground rod. Use ground rods designed for that purpose, not a spare piece of pipe.

Unused Antenna Ports

Port plugs must be installed in any unused antenna ports.

The weatherproof caps on the connectors protect the router interior from environmental elements including water, heat, cold, and dust. They are installed on unused ports before the router is shipped.

When you install a new antenna in a port with an N-connector:

- Chassis-mounted antennas—Remove the weather proof cap before installing a chassis-mounted antenna.
- External antennas—Remove weatherproof cap, then connect the supported Cisco cable to the connector.

Guidelines to Achieving Optimal RF and Antenna Performance

Antennas are a critical component of a wireless communication system. Selecting a suitable antenna, an optimal antenna location, or antenna site is essential for optimum performance of a wireless links.

This section covers general tips for optimizing RF performance of indoor and outdoor terrestrial radio systems in the 400-7125 MHz frequency range. Examples of terrestrial radio systems include 4G LTE, 5G NR, Wi-Fi, LoRa, LR-WPAN and similar. In this context GPS SPS would not be considered a terrestrial system as the signal is received from space, not from another terrestrial site.

Because the antenna transmits and receives radio signals over the air, overall RF performance of the link is susceptible to RF obstructions and common sources of RF interference that can reduce throughput and range of the system.

Follow these guidelines to optimize performance. When in doubt, consult a qualified RF professional, and check with your solution partner for specific recommendations.

Antenna Model Selection and Performance

Consider the following when planning your installation:

- When selecting the antenna, ensure that it covers the frequency ranges or frequency bands of interest, and that it has good RF parameters such as antenna efficiency, VSWR and suitable radiation pattern for every frequency range that your application will use with this antenna.
- Antenna pattern is important. Omni-directional antennas have lower gain, but allow communicating to devices in all azimuth directions. Directional antennas concentrate the beam in a specific direction, making them ideal for point to point communication.
- When a system has multiple RF ports for receive and / or transmit, as is the case for 4G LTE , 5G NR or Wi-Fi, it is highly recommended to populate all the RF ports with suitable antennas to take advantage of MIMO, rather than rely on a single port or single antenna to save on cost. Please see the MIMO section for a detailed description of MIMO benefits.
- For RF systems that support multiple RF ports and multiple RF standards such as LTE, Wi-Fi, and GPS: consider using a multi-element antenna that integrates multiple antennas under the same radome (cover). Doing so may reduce cost compared to deploying and mounting a discrete single port antenna for every RF port.
- For communication between fixed infrastructure devices, such as mesh nodes or a point-to-point backhaul link, each device should have an antenna with the same polarization. If communicating with mobile devices that might be randomly oriented, consider dual-polarized antennas, such as those with both vertical and horizontal or slant +45° and -45° polarized elements.

Antenna Environmental Specifications

The selected antenna must have suitable mechanical and environmental specifications for the environment where it will be deployed. For example, shock and vibration specifications for transportation, corrosion resistant construction for marine and oil and gas industries, or IP (ingress protection) rating for outdoor deployment. Indoor antennas are typically not suitable for harsh industrial environments. Please check with your system integrator for environmental requirements for your application.

Antenna Accessories and Mounting

Consider the following when planning your installation:

- Carefully consider what type of other RF accessories, besides antenna, such as RF cables, lightning arrestors or RF adapters may be required in your installations. It is best to minimize long RF cable runs due to RF signal losses in the cable. Thinner RF cables have more RF loss , thicker cables are less flexible and more expensive.
- Carefully consider how the antenna will be physically mounted, as this may affect antenna selection. For example, a stud mount mechanical mounting design is a better fit for mounting on top of an electrical cabinet than a mast mount antenna.
- For outdoor deployments, follow installation instructions for the antenna. It is good practice to keep protective covers on the radio's RF ports and any antenna or accessory RF ports until the moment the interfaces are mated. This reduces chances of contamination, trapping water or condensation inside the connector, or accidental damage to RF interfaces.

MIMO Performance and Arrays

MIMO systems deliver benefits of higher SNR, higher reliability and higher throughput compared to single antenna systems. In more technical terms, MIMO delivers array gain, diversity gain and multiplexing gain compared to single antenna.

- Array gain — Improvement in SNR (signal to noise ratio) by coherently combining signals from multiple antennas. For example, increasing SNR through beamforming techniques.
- Diversity gain — Improvement in reliability by mitigating deep fading or strong destructive EM wave interference. For example, in a two-antenna system, if one antenna is experiencing deep fading due to an EM destructive null at its location at a given instant, the other antenna is unlikely to have a null at the same instant, and the combined SNR stays at a reliable level. In contrast, a single antenna would see SNR oscillating between good SNR and very poor SNR and reliability would degrade.
- Multiplexing gain — Increase in system capacity or throughput by sending independent data over multiple spatial streams simultaneously. The number of streams cannot be more than the number of antennas. For example, to support three spatial streams, a minimum of three antennas is required. Often there may be additional antennas for diversity or redundancy, such as in the case of 4x4:3, or 4x4 MIMO with 3 spatial streams.

If deploying multiple single-element antennas for a MIMO system in an array, ensure sufficient spacing between the antennas. Omnidirectional elements should generally be at least one wavelength apart at the lowest operating frequency.

Consider the following:

- For Wi-Fi systems operating in the 2.4, 5, and/or 6 GHz bands, space elements at least 5 inches (12.5 cm) apart.

- For 4G LTE and 5G systems with the lowest operating frequency of 617 MHz , space elements at least 20 inches (50 cm) apart.
- Note that spacing between elements inside multi-element MIMO antennas is often less than one wavelength. However multi-element antennas are engineered with MIMO performance in mind, by providing antenna diversity through pattern, polarization, and isolation between MIMO elements.

Antenna siting and location

Consider the following when planning your installation:

- Plan antenna location ahead of time. Ideal location for an antenna is in LOS (line of sight) of the counterpart that it is trying to communicate with. Under LOS conditions the signals propagate directly between the two communication nodes, without relying on signal bouncing off a wall or other structure to reach the counterpart. This is sometimes not possible to achieve in practice, but it is a useful goal to keep in mind when optimizing antenna location.
- While it is good to keep RF cables short, it is most desirable for an antenna to be in the best location it can be to provide the desired coverage.
- For large deployments involving multiple units communicating with each other across a complex urban or industrial landscape, consider running an RF propagation modeling study to predict approximate simulated coverage maps and determine initial placement of the units. A propagation study may help reduce overall deployment cost by discovering and mitigating issues with RF coverage before the infrastructure is physically installed.
- Keep the antenna away from metal obstructions such as heating and air-conditioning ducts, large ceiling trusses, building superstructures, and major power cabling runs. One exception is if the antenna is designed to be mounted on a ground plane. If mounting on a ground plane, mount the antenna on a flat metal surface away from adjacent obstructions.
- It is strongly recommended not to install antennas directly on the router or access point (AP), unless the router or AP is specifically engineered to directly mount the antennas. Products that are engineered for direct mounting of antennas specifically address each of the below issues.
- Reasons to mount antennas away from the router include:
  - Router location may not be optimal location for antenna to communicate with the counterpart wirelessly, so router and antenna may need to be in different locations.
  - Router may have a clutter of Ethernet cable and power cables around it, which will obstruct antenna signal.
  - A number of routers, such as the IR1835, are modular. They have plug-in RF modules for Wi-Fi , 4G LTE or 5G NR such as WP-WIFI6, P-LTEAP18-GL, P-5GS6-GL. These modules have RF connectors spaced close together, and while it is mechanically possible to install four or five antennas directly attached, this will result in significant degradation to RF performance of antennas due to mutual de-tuning between closely spaced antennas. It is strongly recommended to install antennas away from the chassis in modular cases.
- If installing an antenna indoors, consider that the density and electromagnetic properties of the materials used in the building construction determines the number of walls the signal can pass through and still maintain adequate coverage.
  - Paper and vinyl walls have very little effect on signal penetration.

- Solid and pre-cast concrete walls limit signal penetration to one or two walls without degrading coverage.
- Concrete and wood block walls limit signal penetration to three or four walls.
- A signal can penetrate five or six walls constructed of drywall or wood.
- A thick metal wall causes signals to reflect off, causing poor penetration.
- A chain link fence or wire mesh spaced between 1 and 1 1/2 in. (2.5 and 3.8 cm) acts as a harmonic reflector that blocks a 2.4-GHz radio signal.
- Install the antenna away from microwave ovens and 2-GHz cordless phones. These products can cause signal interference because they operate in the same frequency range as the device your antenna is connected to.

Installation Instructions

The following section contains steps for installing the 4G-LTE-ANTM-O-3-B antenna:

Step 1 While choosing the location, keep the following in mind:

- Attempt to center the antenna on a flat plane.

  Attempt to position the antenna so that it has 8 inches of flat plane in any given direction.

  Attempt to space at least 16 inches from an adjacent antenna or metallic structure and choose a location with gentle surface curves to ensure proper sealing.

  Ensure that there is a space that is 2 inches deep and 2 inches in diameter below the mounting surface to allow sufficient clearance for the mounting stud, hardware, and cables.

  Ensure that the diameter of the hole is 5/8 inch.

Step 2 Drill a hole through the mounting surface where the center of the antenna is located. Ensure that the hole is deburred of sharp edges to prevent cable damage during installation.

Figure 42: Drill the Mounting Surface

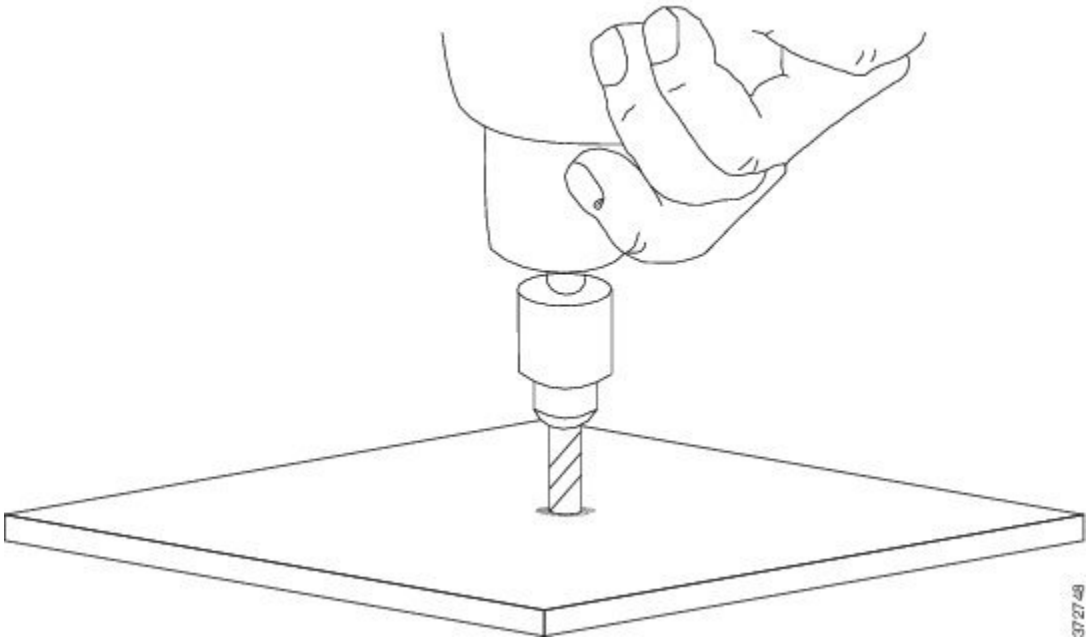

Step 3 Clean the mounting surface around the hole. The surface must be free of any debris, which would otherwise prevent the antenna's inner foam gasket from adhering to or the outer rubber gasket from forming a seal.

Step 4 Remove the nut from the mounting stud and cables one by one.

Step 5 Insert the mounting stud through the hole and then thread the cables through the serrated face nut one by one.

Warning It is important that the orientation of the serrated face nut should be correct. Otherwise, the serrated part of the lock nut will not bite into the mounting stud.

Figure 43: Bottom View of the Antenna

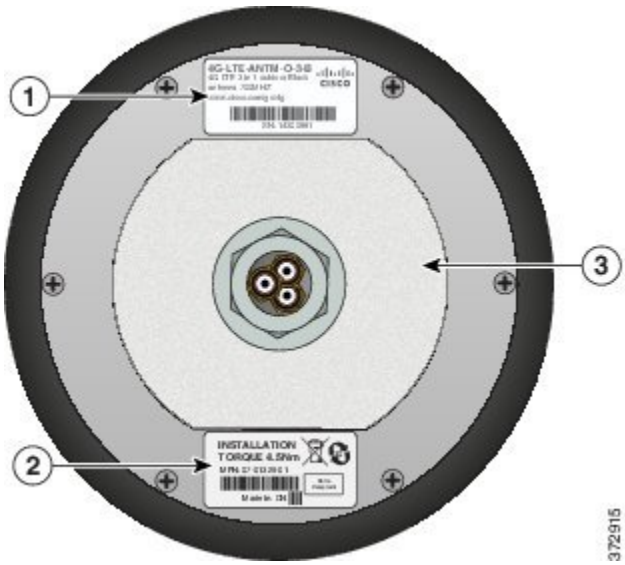

Table 21:

Item	Description
1	Product ID and Serialization Label
2	MPN and Torque Label
3	Liner

Step 6 Position the antenna onto the mounting surface and tighten the nut hand-tight, as shown in the following figure. Tighten it further using a wrench until the antenna is fully seated. Visually inspect the outer rubber antenna gasket to ensure that it has been compressed and sealed tightly against the mounting surface and radome.

Figure 44: Tighten the Nut after the Antenna is fully seated

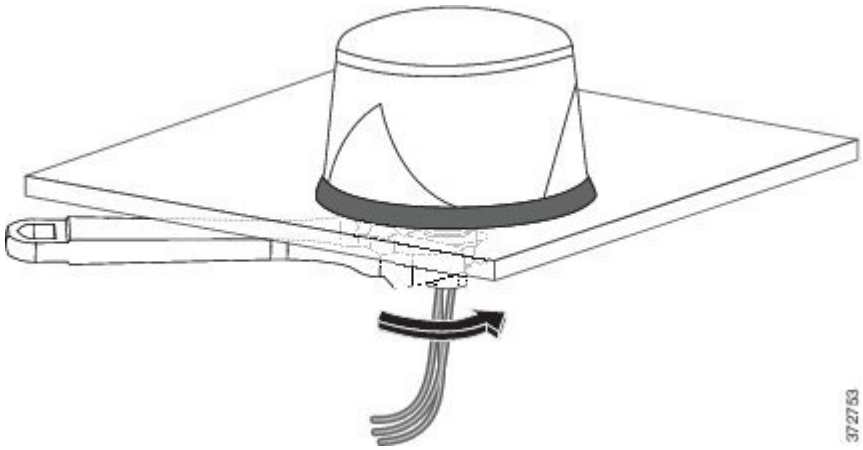

Deployment Scenarios

The following figure shows the deployment of the 4G-LTE-ANTM-O-3-B antenna on an ATM with a single router.

Note All the three antenna cables are SubMiniature version A (SMA-male) connectors, but the MAIN and the Diversity (DIV) of the router has the Threaded Neill–Concelman (TNC-female) connectors, and the GPS has an SMA-female connector. In this case, an SMA-female to TNC-male adapter needs to be used to connect the SMA-male connectors to the MAIN and DIV of the router because they cannot be connected to the SMA-male connectors directly.

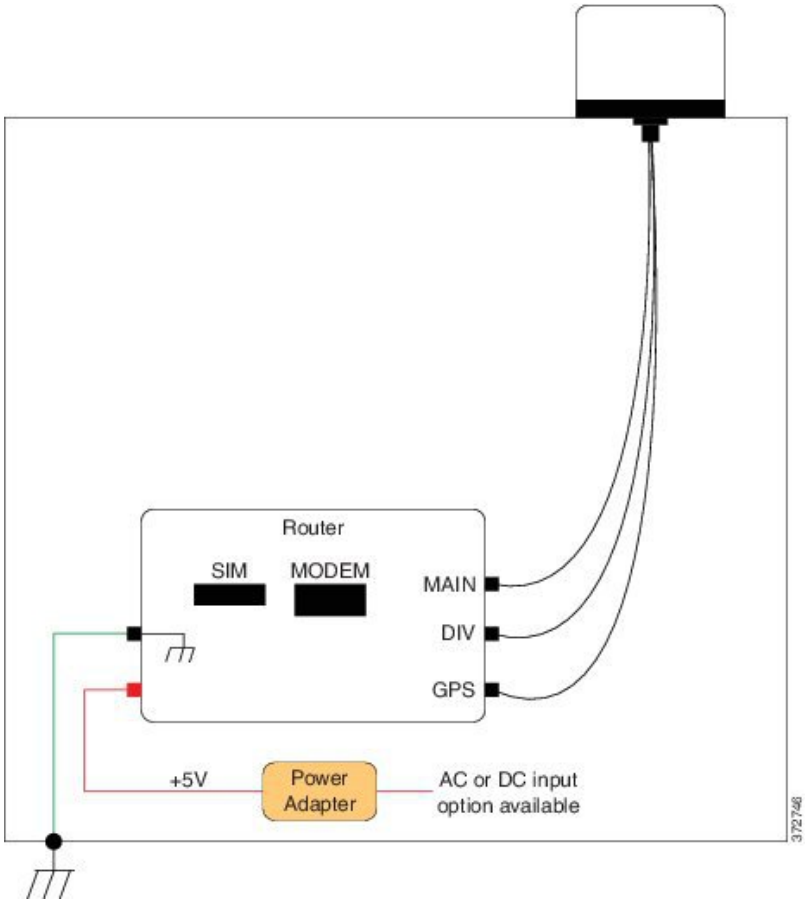

The following figure shows the deployment of 4G-LTE-ANTM-O-3-B on an ATM with dual routers.

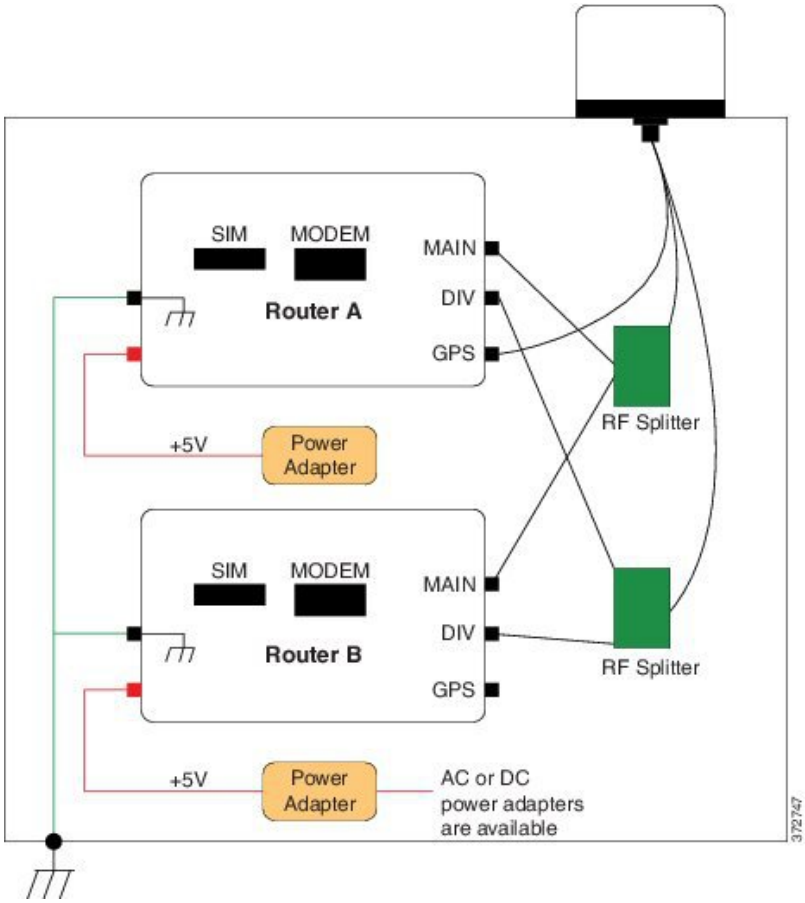

Communications, Services, and Additional Information

- To receive timely, relevant information from Cisco, sign up at Cisco Profile Manager.
- To get the business impact you're looking for with the technologies that matter, visit Cisco Services.
- To submit a service request, visit Cisco Support.
- To discover and browse secure, validated enterprise-class apps, products, solutions, and services, visit Cisco DevNet.
- To obtain general networking, training, and certification titles, visit Cisco Press.
- To find warranty information for a specific product or product family, access Cisco Warranty Finder.

Cisco Bug Search Tool

Cisco Bug Search Tool (BST) is a web-based tool that acts as a gateway to the Cisco bug tracking system that maintains a comprehensive list of defects and vulnerabilities in Cisco products and software. BST provides you with detailed defect information about your products and software.

Documentation Feedback

To provide feedback about Cisco technical documentation, use the feedback form available in the right pane of every online document.

Cisco Support Community

Cisco Support Community is a forum for you to ask and answer questions, share suggestions, and collaborate with your peers. Join the forum at https://supportforums.cisco.com/index.jspa.

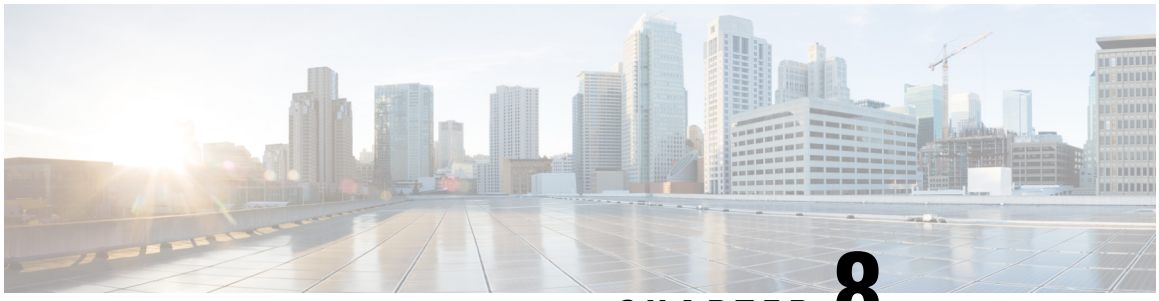

CHAPTER 8

Cisco Multi-element, 9-in-1, LTE/Wi-Fi/GNSS antenna (5G-ANTM-O-4-B)

This chapter contains the following:

- Overview, on page 117
- Antenna Features, on page 117
- Antenna Assembly, on page 118
- Technical Specifications, on page 120
- Antenna Radiation Patterns, on page 124
- General Safety Precautions, on page 134
- Guidelines to Achieving Optimal RF and Antenna Performance, on page 136
- Installing the Antenna, on page 139
- Communications, Services, and Additional Information, on page 161

Overview

This section describes the technical specifications and installation instructions for the Cisco Multi-element, 9-in-1, LTE/Wi-Fi/GNSS antenna (5G-ANTM-O-4-B), hereafter referred to as the antenna. The antenna meets or exceeds a variety of environmental ruggedization specifications for transportation applications.

Antenna Features

The antenna features:

- Wideband coverage: 4G LTE, 5G - FR1 and dual-band 802.11ac (Wi-Fi 5) coverage in a single, low-profile housing
- Superior out-of-band rejection: Proprietary filtering design allows wideband coverage for all GNSS frequencies
- Metal 1-inch stud mount with slotted jam nut provides single cable exit for easier installation and/or antenna replacement.
- IP67 compliant design provides maximum protection against water or dust ingress under severe environmental conditions (when installed on sealed surface)

- Proprietary high rejection filtering allows wide-band coverage while achieving superior out-of-band rejection for all GNSS frequencies
- Meets EN 50155:2007 and AAR certification requirements for rail applications

Note Loss of the 17 foot GNSS cable is compensated by the gain of the active GNSS antenna, and has little impact on GNSS performance.

Antenna Assembly

The following figure shows the antenna.

Figure 45: Cisco 5G-ANTM-O-4-B Antenna



The following figure shows the top of the antenna.

Figure 46: Antenna Mechanical View (Top)

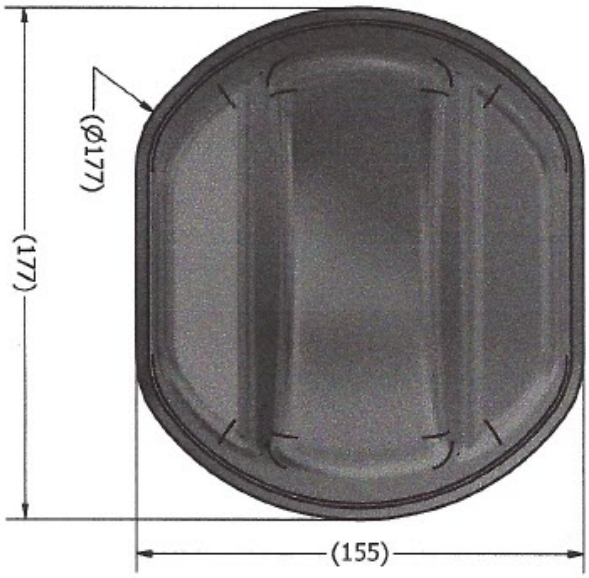

Figure 47: Antenna Mechanical View (Side)

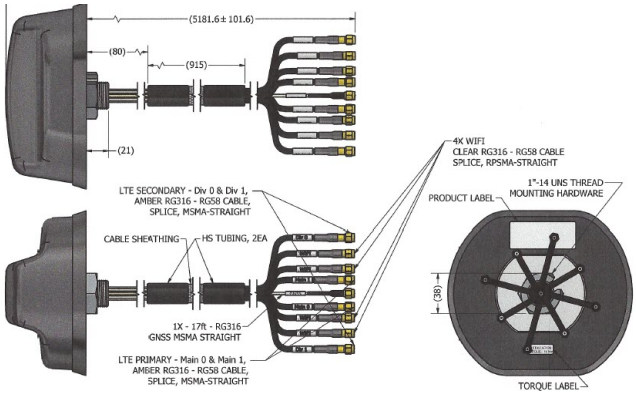

Figure 48: Antenna Mechanical View (Bottom)

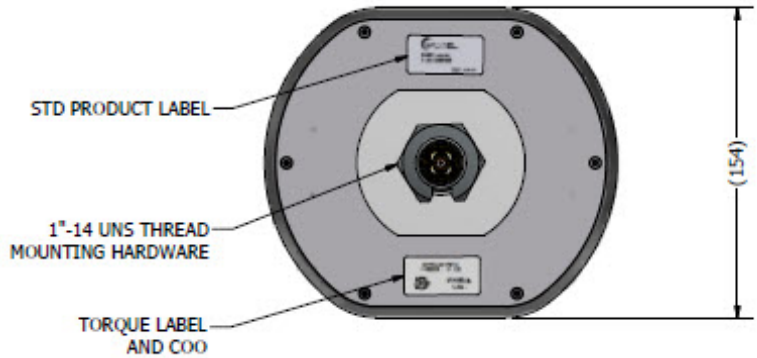

Note All dimensions are in millimeters [inches] unless explicitly stated otherwise in the drawing.

Antenna Cable Details

The following figure shows the details and labels of the antenna cables.

Figure 49: Cable Details

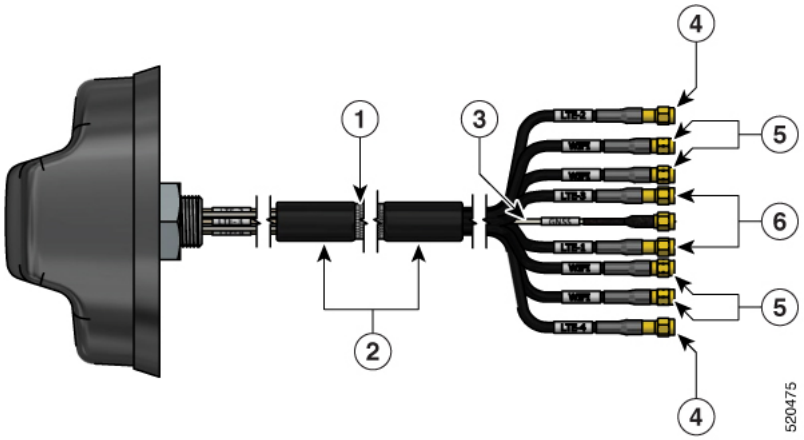

1	Cable sheathing
2	HS TUBING, 2EA LTE-ID LABEL 2EA
3	RG316 GNSS MSMA STRAIGHT
4	LTE SECONDARY (DIVERSITY) – LTE2 (DIV0) and LTE4 (DIV1) AMBER RG316 - RG58 CABLE, SPLICE, MSMA-STRAIGHT
5	4X WIFI CLEAR RG316 - RG58 CABLE SPLICE, RPSMA-STRAIGHT
6	LTE PRIMARY (MAIN) – LTE1 (MAIN0) and LTE3 (MAIN1) AMBER RG316 - RG58 CABLE, SPLICE, MSMA-STRAIGHT

Technical Specifications

This section contains mechanical, electrical, environmental, and operational specifications.

Mechanical Specifications

The following table shows the details for the antenna cables.

Table 22: Antenna Cable Details

Elements	Cable	Connectors	Mounting Method
LTE (All Ports)	Four-17 feet (2-ft RG-316/15-ft Pro-Flex™ Plus 195)	SMA Plug (Male)	1-inch OD, 3/4-inch long (.75”) zinc stud mount with jam nut
Wi-Fi (All Ports)	Four-17 feet (2-ft RG-316/15-ft Pro-Flex™ Plus 195)	Reverse Polarity SMA Plug (Male)	
GNSS	One-17 feet RG-316	SMA Plug (Male)	

The following table shows the details for the antenna body.

Table 23: Antenna Body Details

Dimensions (L x W x H)	Weight (9 ports)	Housing Material	Gasket Design & Construction
6.93 x 6.09 x 3.01 in (176.0 x 154.8 x 76.5 mm)	4.8 lbs (2.2 kg)	UV-Stable Rugged Thermoplastics. UV-94 HB Flammability rated. UL 746C F1 rated for UV and water exposure.	Contour matching, conformable, thermoplastic-elastomer gasket designed to seal between radome and baseplate. Gasket flexes and conforms to contoured surfaces. Baseplate has a 3M™ VHB mounting pad for anti-rotation.

Electrical Specifications

The following tables provide Radio Frequency specifications:

Table 24: LTE Primary (1 and 3)

F1 (MHz)	F2 (MHz)	VSWR	Gain (dB)			Efficiency	
			Max	Typical	Range +/-	Avg	Range +/-
617	698	2.5	-0.2	0.9	0.7	33%	3%
698	802	1.9	1.1	-0.3	1.4	34%	6%
824	960	2.0	2.1	0.6	1.6	36%	4%
1710	2200	1.6	4.4	2.6	1.9	31%	3%
2300	2690	1.4	4.8	2.7	2.1	29%	2%
3400	3800	1.4	4.7	2.5	2.2	26%	1%
5150	5950	1.3	5.8	1.9	3.9	16%	3%

Table 25: LTE Secondary (Diversity) (2 and 4)

F1 (MHz)	F2 (MHz)	VSWR	Gain (dB)			Efficiency	
			Max	Typical	Range +/-	Avg	Range +/-
617	698	3.4	-1.4	-3.0	1.6	16%	8%
733	802	2.0	0.0	-1.0	0.9	31%	4%
824	960	2.7	0.0	-1.6	1.5	28%	8%
1805	2200	1.6	1.7	0.9	0.8	29%	4%
2300	2690	2.0	1.5	-0.5	2.0	20%	6%
3400	3800	1.9	2.2	0.4	1.8	20%	3%
5150	5950	1.4	2.6	1.3	1.4	16%	1%

Table 26: Wi-Fi

F1 (MHz)	F2 (MHz)	VSWR	Gain (dB)			Efficiency	
			Max	Typical	Range +/-	Avg	Range +/-
2400	2500	1.3	9.1	7.2	1.9	74%	74%
4900	5900	1.5	11.4	9.1	2.3	59%	14%

The following notes apply to the tables provided:

Note Gain and efficiency measured with no cable and no ground plane.

Note VSWR measured with 17-ft cables and no ground plane.

Note For all items listed in the above tables, the following applies:

- Polarization is Linear
- Nominal Impedance is 50 ohms
- Maximum Power is 25 watts

The following table provides GNSS Specifications:

Table 27: GNSS Specifications

Specification	Measurement
Frequency Band	1565-1608 MHz
Amplifier Gain	@ 3.0 VDC: 26 dB (typical)
Output VSWR	2.0:1 (maximum)
DC Current	25 mA (typical)
DC Voltage	2.8-6.0 V (operating) ≤ 12.0 V (survivability)
Noise Figure	< 2.0 dB (typical)
Out-of-Band Rejection	f0 = 1586 MHz f0 ± 50 MHz: ≥ 60 dBc f0 ± 60 MHz: ≥ 70 dBc
Nominal Gain	3 dBic @ 90° -2 dBic @ 20°
Polarization	Right hand circular
Nominal Impedance	50 ohms

Environmental and Operational Specifications

Table 28: Environmental and Operational Specifications for the Antenna

Specification	Description
Operating temperature range	-40°C to +85°C
Vibration, Shock, Thermal, Corrosion, Seismic	Outdoor IP67. Tested to a variety of appropriate industrial, vehicular, transportation, and mil-spec standards.

Antenna Radiation Patterns

The following sections illustrate the radiation patterns for the antenna.

Primary LTE/5G Antenna Radiation Patterns (LTE1 and LTE3)



Note LTE1 and LTE3 are also referred to as Main0 and Main1, respectively.

Refer to the following graphics.

Elevation Pattern at 750 MHz

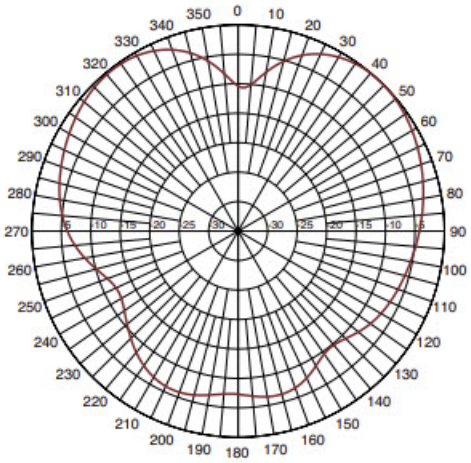

Elevation Pattern at 960 MHz

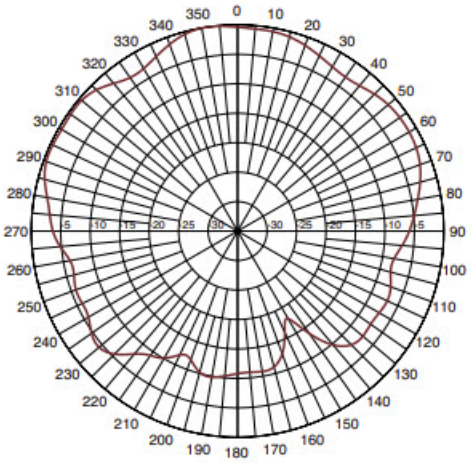

Elevation Pattern at 850 MHz

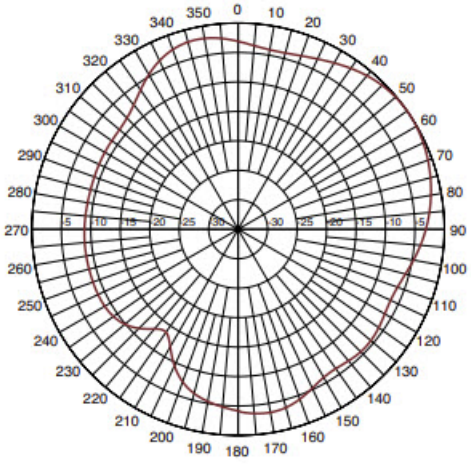

Elevation Pattern at 1.75 GHz

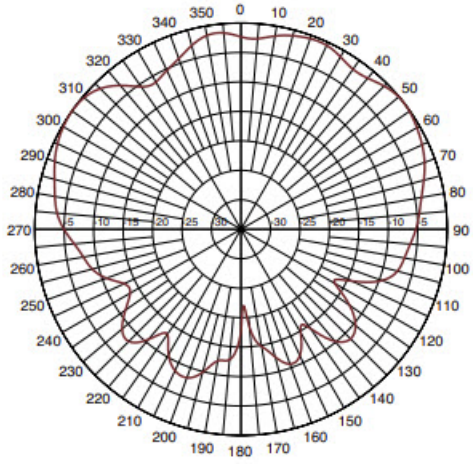

Elevation Pattern at 1.9 GHz

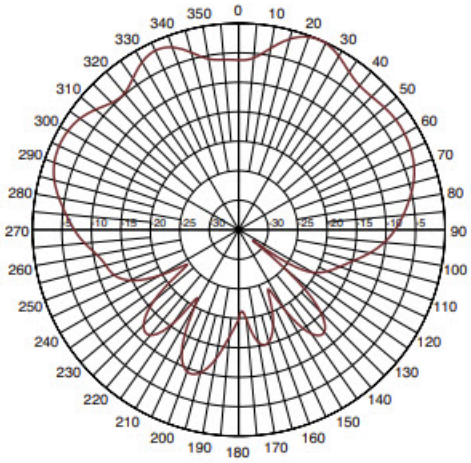

Elevation Pattern at 2.6 GHz

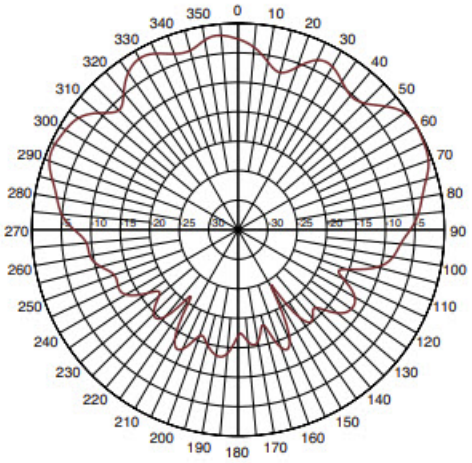

Elevation Pattern at 2.2 GHz

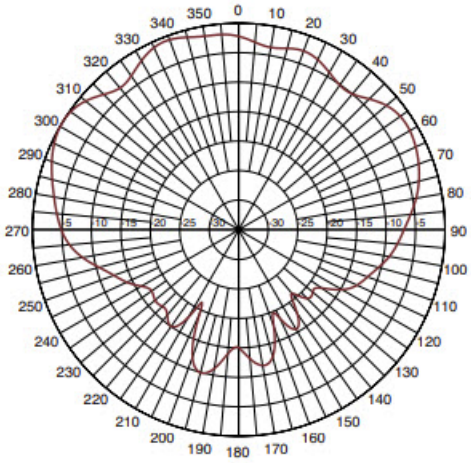

Elevation Pattern at 3.6 GHz

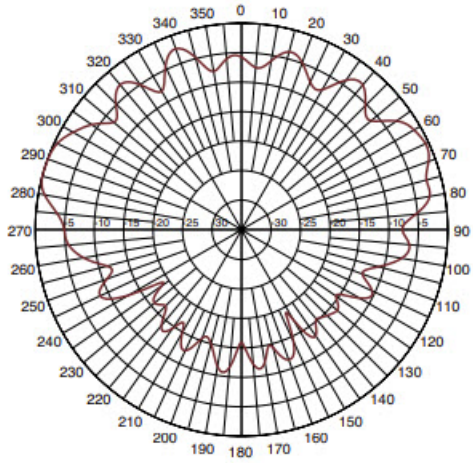

Azimuth Pattern at 750 MHz

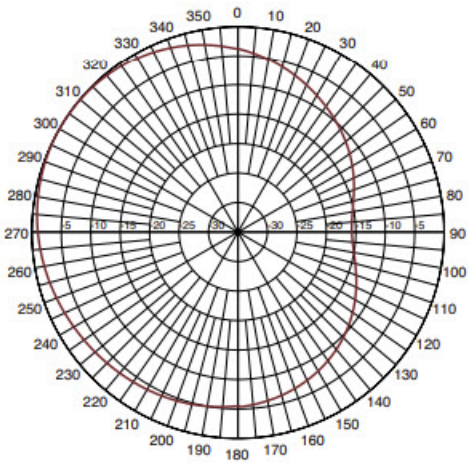

Azimuth Pattern at 960 MHz

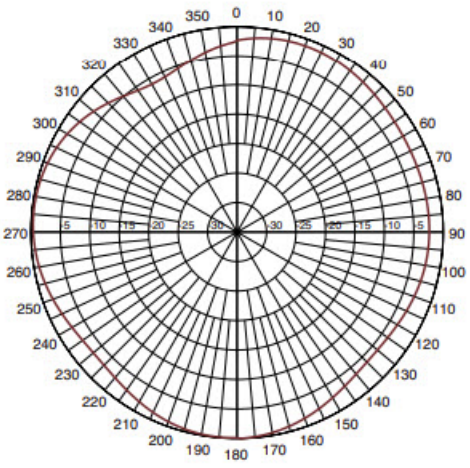

Azimuth Pattern at 850 MHz

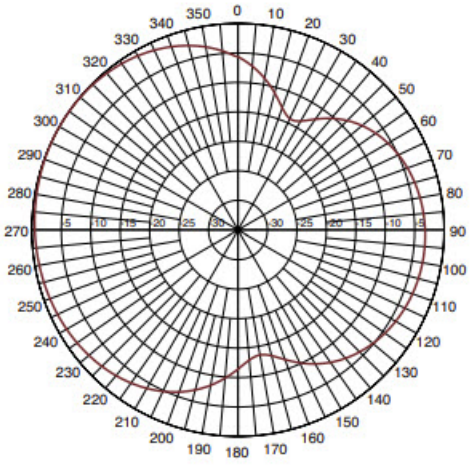

Azimuth Pattern at 1.75 GHz

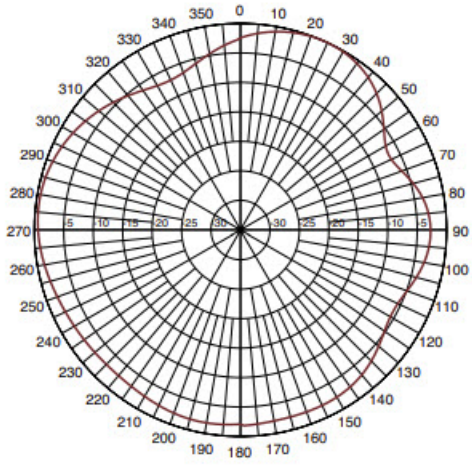

Azimuth Pattern at 1.9 GHz

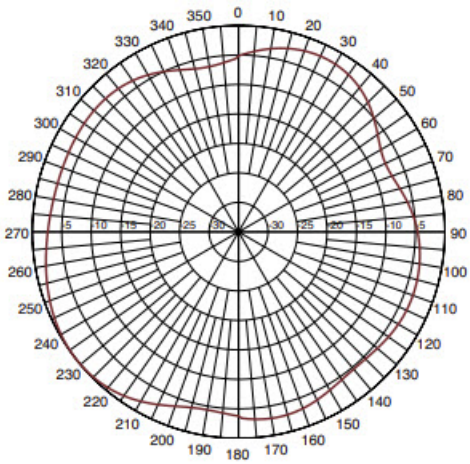

Azimuth Pattern at 2.6 GHz

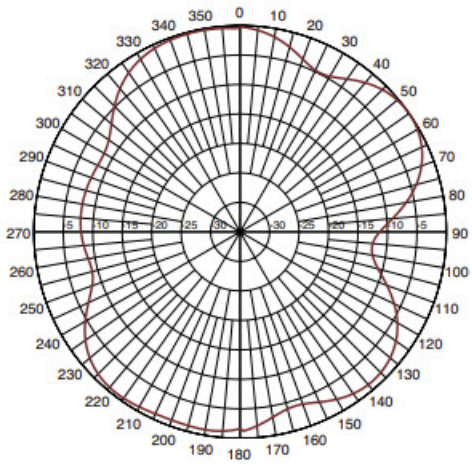

Azimuth Pattern at 2.2 GHz

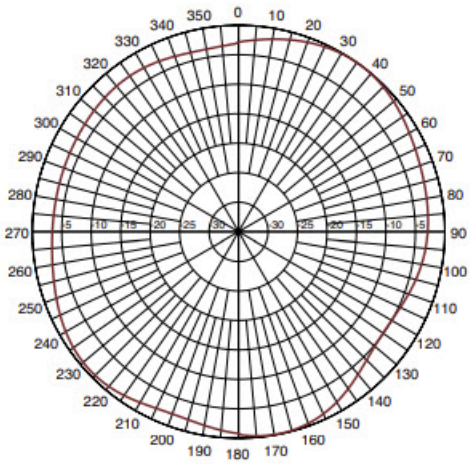

Azimuth Pattern at 3.6 GHz

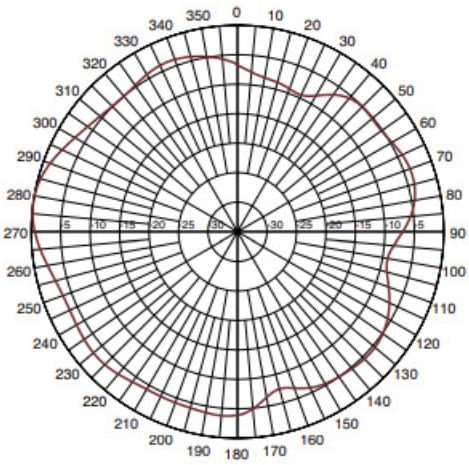

Secondary LTE/5G Antenna Radiation Patterns (LTE2 and LTE4)

Note LTE2 and LTE4 are also referred to as Div0 and Div1, respectively.

Refer to the following graphics.

Elevation Pattern at 750 MHz

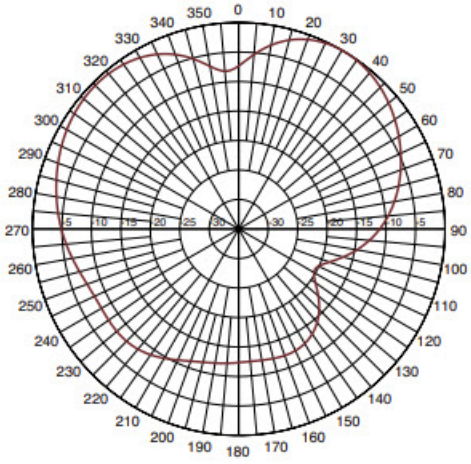

Elevation Pattern at 960 MHz

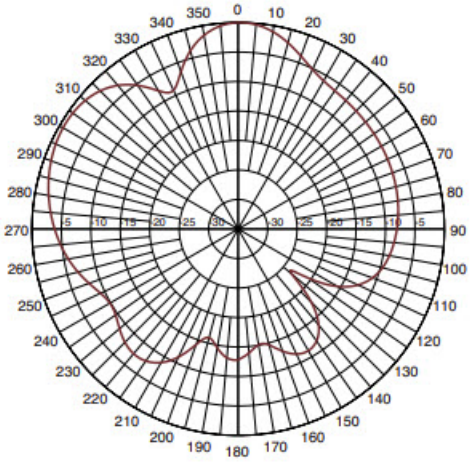

Elevation Pattern at 850 MHz

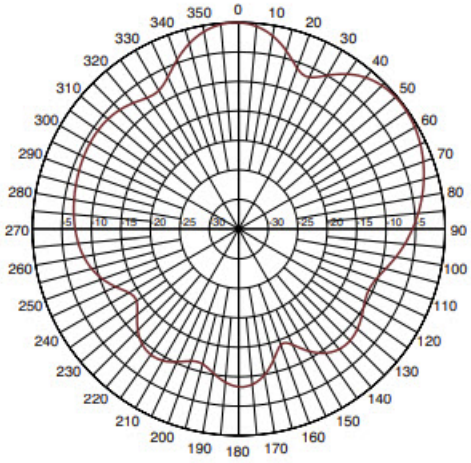

Elevation Pattern at 1.9 GHz

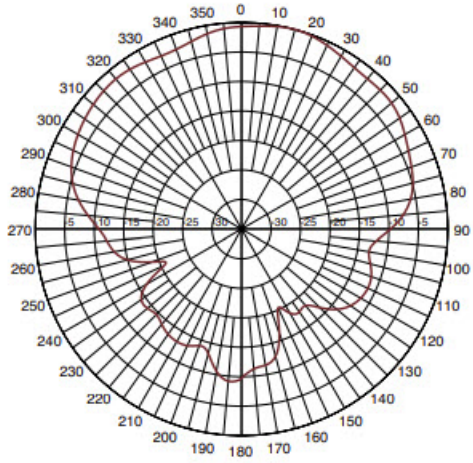

Elevation Pattern at 2.2 GHz

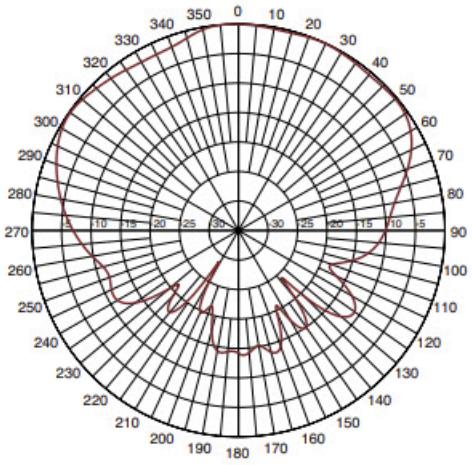

Elevation Pattern at 3.6 GHz

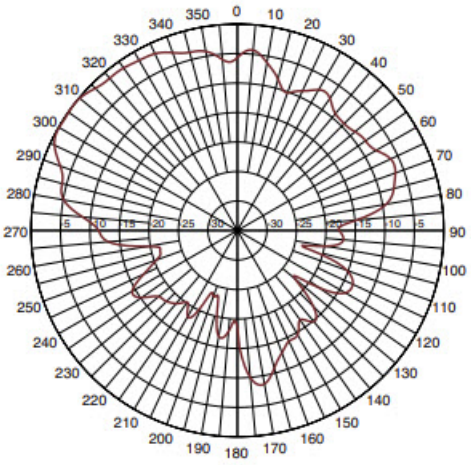

Elevation Pattern at 2.6 GHz

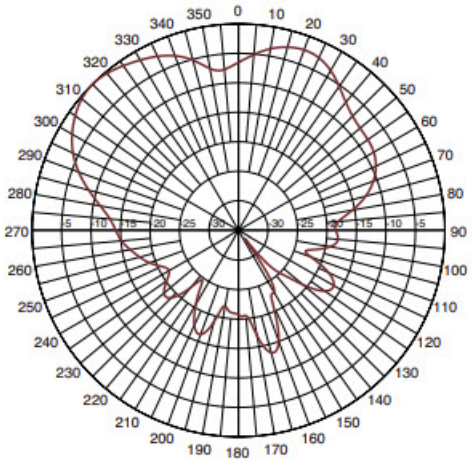

Phi-90 Azimuth Pattern at 750 MHz

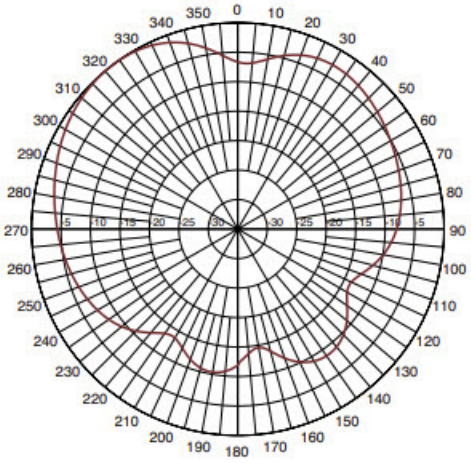

Phi-90 Azimuth Pattern at 960 MHz

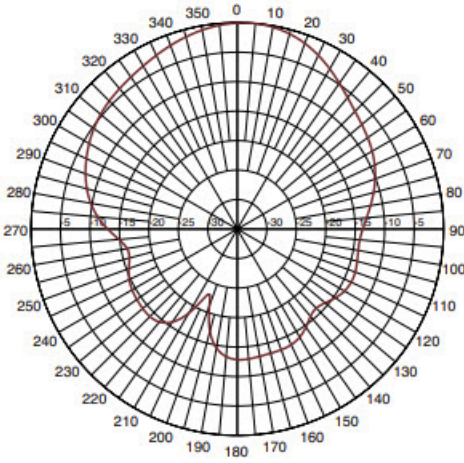

Phi-90 Azimuth Pattern at 850 MHz

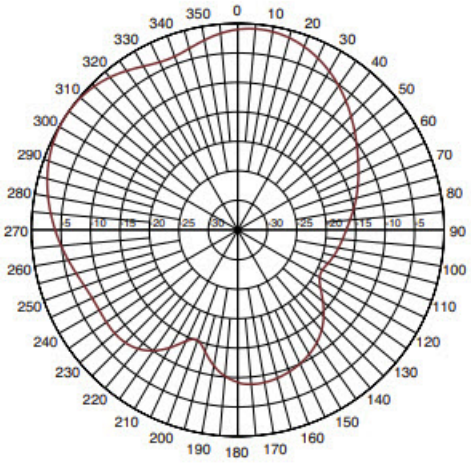

Phi-90 Azimuth Pattern at 1.9 GHz

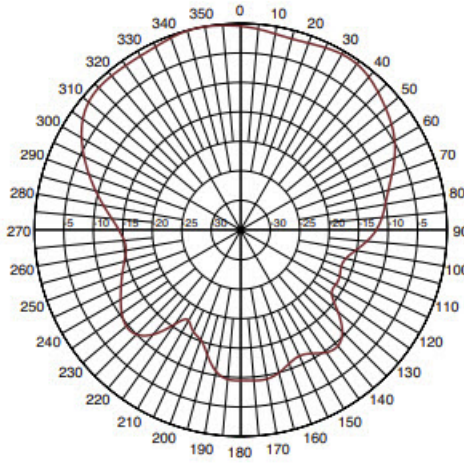

Phi-90 Azimuth Pattern at 2.2 GHz

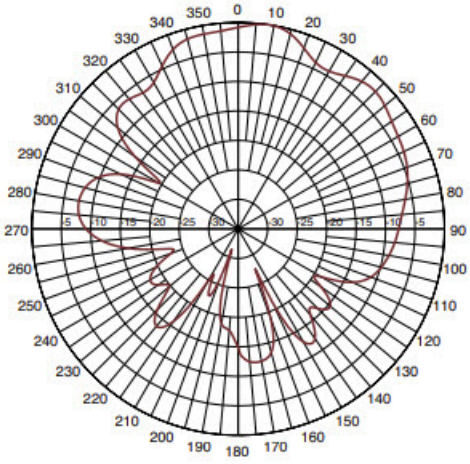

Phi-90 Azimuth Pattern at 3.6 GHz

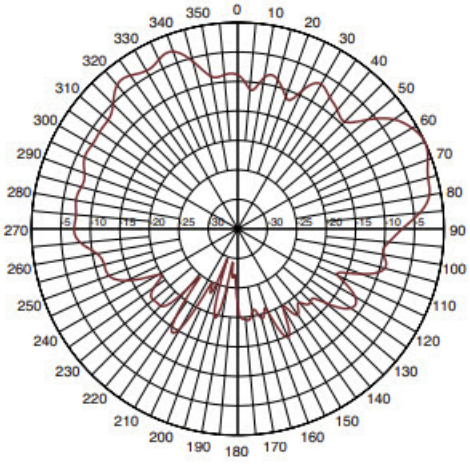

Phi-90 Azimuth Pattern at 2.6 GHz

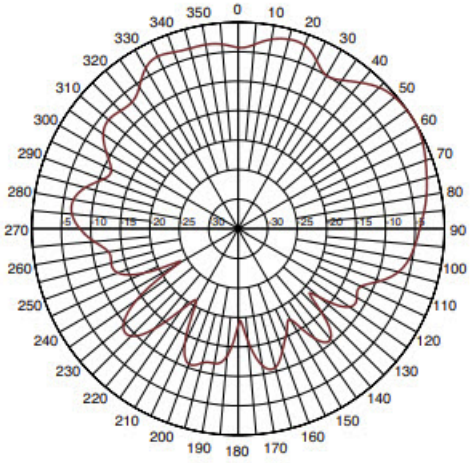

THETA-90 Azimuth Pattern at 750 MHz

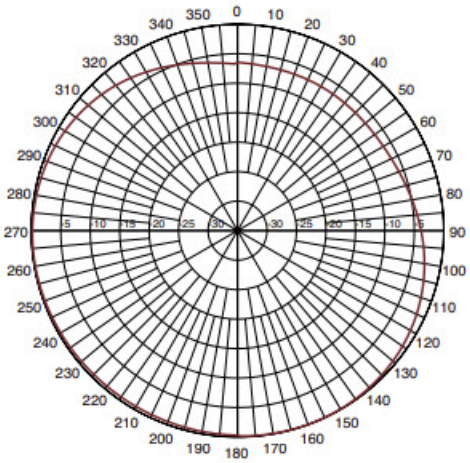

THETA-90 Azimuth Pattern at 960 MHz

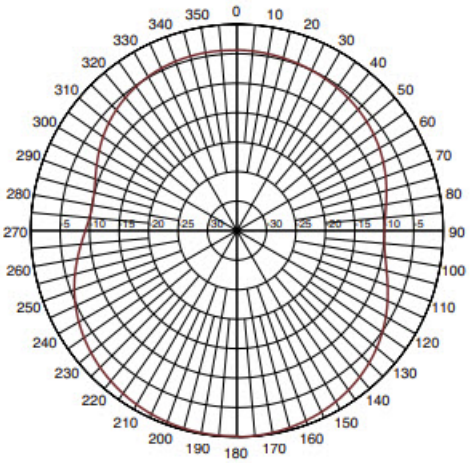

THETA-90 Azimuth Pattern at 850 MHz

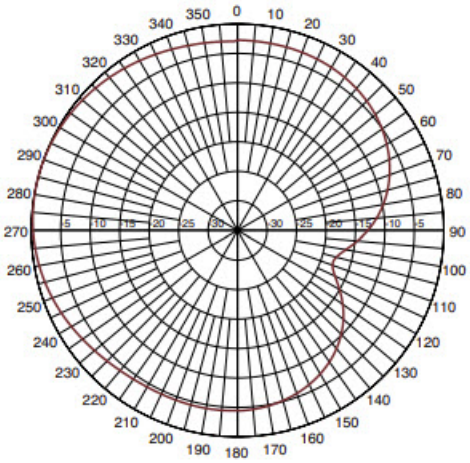

THETA-90 Azimuth Pattern at 1.9 GHz

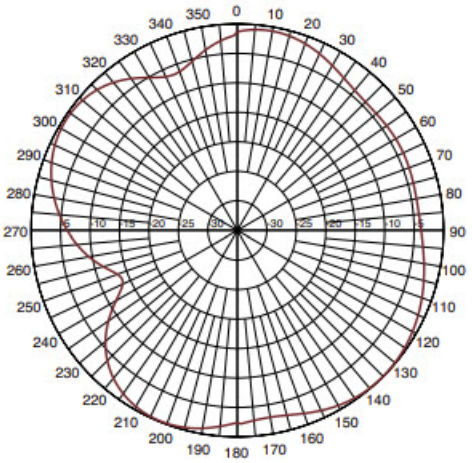

THETA-90 Azimuth Pattern at 2.2 GHz

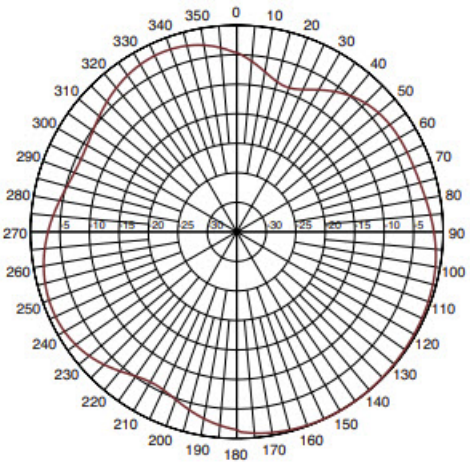

THETA-90 Azimuth Pattern at 3.6 GHz

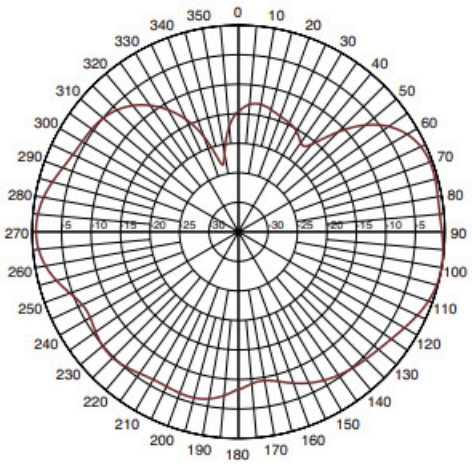

General Safety Precautions

Warning This warning symbol means danger. You are in a situation that could cause bodily injury. Before you work on any equipment, be aware of the hazards involved with electrical circuitry and be familiar with standard practices for preventing accidents. Use the statement number provided at the end of each warning to locate its translation in the translated safety warnings that accompanied this device. **Statement 1071**

Warning Do not work on the system or connect or disconnect cables during periods of lightning activity. **Statement 1001**

Warning Do not locate the outdoor antenna near overhead power lines or other electric light or power circuits, or where it can come into contact with such circuits. When installing the antenna, take extreme care not to come into contact with such circuits, as they may cause serious injury or death. For proper installation and grounding of the antenna, please refer to national and local codes (for example, U.S.:NFPA 70, National Electrical Code, Article 810, Canada:Canadian Electrical Code, Section 54). **Statement 1052**

Warning In order to comply with FCC radio frequency (RF) exposure limits, antennas should be located at a minimum of 7.9 inches (20 cm) or more from the body of all persons. **Statement 332**

Note For your safety, and to help you achieve a good installation, please read and follow these safety precautions.

Mast Mounted or Building Mounted Installations

The following instructions are common to most mast mounted or building mounted installations. For specific installation instructions for each antenna, see the antenna data-sheet and the router hardware installation guide.

- Find someone to help you—installing an antenna is often a two-person job.
- Select your installation site with safety, as well as performance, in mind. Remember that electric power lines and phone lines look alike. For your safety, assume that any overhead line can kill you.
- Contact your electric power company. Tell them your plans and ask them to come look at your proposed installation.
- Do not use a metal ladder.
- Do not work on a wet or windy day.
- Do dress properly—wear shoes with rubber soles and heels, rubber gloves, and a long-sleeved shirt or jacket.
- If the assembly starts to drop, move away from it and let it fall. Because the antenna, mast, cable, and metal guy wires are all excellent conductors of electrical current, even the slightest touch of any of these parts to a power line completes an electrical path through the antenna and the installer.
- If any part of the antenna system should come in contact with a power line, do not touch it or try to remove it yourself. Call your local power company to have it removed safely.
- If an accident should occur with the power lines, call for qualified emergency help immediately.
- Assemble your new antenna on the ground or a level surface at the installation site.
- Connect its coaxial cable while you are on the ground and attach the antenna to the mast.
- Ensure that the mast does not fall as you raise or remove it. Use a durable non-conductive rope secured at each two foot level as the mast is raised. Have an assistant tend the rope, ready to pull the mast clear of any hazards (such as power lines) should it begin to fall.
- Use the mounting bracket provided with the antenna.
- If the installation will use guy wires:
    - Install guy anchor bolts.
    - Estimate the length of guy wire and cut it before raising the mast.
    - Attach guy wires to a mast using guy rings.
    - In the case of a guyed (tall, thin mast) installation, you must have at least one assistant to hold the mast upright while the guy wires are attached and tightened to the anchor bolts.
- Attach a “DANGER” label at eye level on the mast.
- Install ground rods to remove any static electricity buildup and connect a ground wire to the mast and ground rod. Use ground rods designed for that purpose, not a spare piece of pipe.

Unused Antenna Ports

Port plugs must be installed in any unused antenna ports.

The weatherproof caps on the connectors protect the router interior from environmental elements including water, heat, cold, and dust. They are installed on unused ports before the router is shipped.

When you install a new antenna in a port with an N-connector:

- Chassis-mounted antennas—Remove the weather proof cap before installing a chassis-mounted antenna.
- External antennas—Remove weatherproof cap, then connect the supported Cisco cable to the connector.

Guidelines to Achieving Optimal RF and Antenna Performance

Antennas are a critical component of a wireless communication system. Selecting a suitable antenna, an optimal antenna location, or antenna site is essential for optimum performance of a wireless links.

This section covers general tips for optimizing RF performance of indoor and outdoor terrestrial radio systems in the 400-7125 MHz frequency range. Examples of terrestrial radio systems include 4G LTE, 5G NR, Wi-Fi, LoRa, LR-WPAN and similar. In this context GPS SPS would not be considered a terrestrial system as the signal is received from space, not from another terrestrial site.

Because the antenna transmits and receives radio signals over the air, overall RF performance of the link is susceptible to RF obstructions and common sources of RF interference that can reduce throughput and range of the system.

Follow these guidelines to optimize performance. When in doubt, consult a qualified RF professional, and check with your solution partner for specific recommendations.

Antenna Model Selection and Performance

Consider the following when planning your installation:

- When selecting the antenna, ensure that it covers the frequency ranges or frequency bands of interest, and that it has good RF parameters such as antenna efficiency, VSWR and suitable radiation pattern for every frequency range that your application will use with this antenna.
- Antenna pattern is important. Omni-directional antennas have lower gain, but allow communicating to devices in all azimuth directions. Directional antennas concentrate the beam in a specific direction, making them ideal for point to point communication.
- When a system has multiple RF ports for receive and / or transmit, as is the case for 4G LTE , 5G NR or Wi-Fi, it is highly recommended to populate all the RF ports with suitable antennas to take advantage of MIMO, rather than rely on a single port or single antenna to save on cost. Please see the MIMO section for a detailed description of MIMO benefits.
- For RF systems that support multiple RF ports and multiple RF standards such as LTE, Wi-Fi, and GPS: consider using a multi-element antenna that integrates multiple antennas under the same radome (cover). Doing so may reduce cost compared to deploying and mounting a discrete single port antenna for every RF port.
- For communication between fixed infrastructure devices, such as mesh nodes or a point-to-point backhaul link, each device should have an antenna with the same polarization. If communicating with mobile

devices that might be randomly oriented, consider dual-polarized antennas, such as those with both vertical and horizontal or slant +45° and -45° polarized elements.

Antenna Environmental Specifications

The selected antenna must have suitable mechanical and environmental specifications for the environment where it will be deployed. For example, shock and vibration specifications for transportation, corrosion resistant construction for marine and oil and gas industries, or IP (ingress protection) rating for outdoor deployment. Indoor antennas are typically not suitable for harsh industrial environments. Please check with your system integrator for environmental requirements for your application.

Antenna Accessories and Mounting

Consider the following when planning your installation:

- Carefully consider what type of other RF accessories, besides antenna, such as RF cables, lightning arrestors or RF adapters may be required in your installations. It is best to minimize long RF cable runs due to RF signal losses in the cable. Thinner RF cables have more RF loss , thicker cables are less flexible and more expensive.
- Carefully consider how the antenna will be physically mounted, as this may affect antenna selection. For example, a stud mount mechanical mounting design is a better fit for mounting on top of an electrical cabinet than a mast mount antenna.
- For outdoor deployments, follow installation instructions for the antenna. It is good practice to keep protective covers on the radio's RF ports and any antenna or accessory RF ports until the moment the interfaces are mated. This reduces chances of contamination, trapping water or condensation inside the connector, or accidental damage to RF interfaces.

MIMO Performance and Arrays

MIMO systems deliver benefits of higher SNR, higher reliability and higher throughput compared to single antenna systems. In more technical terms, MIMO delivers array gain, diversity gain and multiplexing gain compared to single antenna.

- Array gain — Improvement in SNR (signal to noise ratio) by coherently combining signals from multiple antennas. For example, increasing SNR through beamforming techniques.
- Diversity gain — Improvement in reliability by mitigating deep fading or strong destructive EM wave interference. For example, in a two-antenna system, if one antenna is experiencing deep fading due to an EM destructive null at its location at a given instant, the other antenna is unlikely to have a null at the same instant, and the combined SNR stays at a reliable level. In contrast, a single antenna would see SNR oscillating between good SNR and very poor SNR and reliability would degrade.
- Multiplexing gain — Increase in system capacity or throughput by sending independent data over multiple spatial streams simultaneously. The number of streams cannot be more than the number of antennas. For example, to support three spatial streams, a minimum of three antennas is required. Often there may be additional antennas for diversity or redundancy, such as in the case of 4x4:3, or 4x4 MIMO with 3 spatial streams.

If deploying multiple single-element antennas for a MIMO system in an array, ensure sufficient spacing between the antennas. Omnidirectional elements should generally be at least one wavelength apart at the lowest operating frequency.

Consider the following:

- For Wi-Fi systems operating in the 2.4, 5, and/or 6 GHz bands, space elements at least 5 inches (12.5 cm) apart.
- For 4G LTE and 5G systems with the lowest operating frequency of 617 MHz , space elements at least 20 inches (50 cm) apart.
- Note that spacing between elements inside multi-element MIMO antennas is often less than one wavelength. However multi-element antennas are engineered with MIMO performance in mind, by providing antenna diversity through pattern, polarization, and isolation between MIMO elements.

Antenna siting and location

Consider the following when planning your installation:

- Plan antenna location ahead of time. Ideal location for an antenna is in LOS (line of sight) of the counterpart that it is trying to communicate with. Under LOS conditions the signals propagate directly between the two communication nodes, without relying on signal bouncing off a wall or other structure to reach the counterpart. This is sometimes not possible to achieve in practice, but it is a useful goal to keep in mind when optimizing antenna location.
- While it is good to keep RF cables short, it is most desirable for an antenna to be in the best location it can be to provide the desired coverage.
- For large deployments involving multiple units communicating with each other across a complex urban or industrial landscape, consider running an RF propagation modeling study to predict approximate simulated coverage maps and determine initial placement of the units. A propagation study may help reduce overall deployment cost by discovering and mitigating issues with RF coverage before the infrastructure is physically installed.
- Keep the antenna away from metal obstructions such as heating and air-conditioning ducts, large ceiling trusses, building superstructures, and major power cabling runs. One exception is if the antenna is designed to be mounted on a ground plane. If mounting on a ground plane, mount the antenna on a flat metal surface away from adjacent obstructions.
- It is strongly recommended not to install antennas directly on the router or access point (AP), unless the router or AP is specifically engineered to directly mount the antennas. Products that are engineered for direct mounting of antennas specifically address each of the below issues.
- Reasons to mount antennas away from the router include:
  - Router location may not be optimal location for antenna to communicate with the counterpart wirelessly, so router and antenna may need to be in different locations.
  - Router may have a clutter of Ethernet cable and power cables around it, which will obstruct antenna signal.
  - A number of routers, such as the IR1835, are modular. They have plug-in RF modules for Wi-Fi , 4G LTE or 5G NR such as WP-WIFI6, P-LTEAP18-GL, P-5GS6-GL. These modules have RF connectors spaced close together, and while it is mechanically possible to install four or five antennas directly attached, this will result in significant degradation to RF performance of antennas due to mutual de-tuning between closely spaced antennas. It is strongly recommended to install antennas away from the chassis in modular cases.

- If installing an antenna indoors, consider that the density and electromagnetic properties of the materials used in the building construction determines the number of walls the signal can pass through and still maintain adequate coverage.
  - Paper and vinyl walls have very little effect on signal penetration.
  - Solid and pre-cast concrete walls limit signal penetration to one or two walls without degrading coverage.
  - Concrete and wood block walls limit signal penetration to three or four walls.
  - A signal can penetrate five or six walls constructed of drywall or wood.
  - A thick metal wall causes signals to reflect off, causing poor penetration.
  - A chain link fence or wire mesh spaced between 1 and 1 1/2 in. (2.5 and 3.8 cm) acts as a harmonic reflector that blocks a 2.4-GHz radio signal.
  - Install the antenna away from microwave ovens and 2-GHz cordless phones. These products can cause signal interference because they operate in the same frequency range as the device your antenna is connected to.

Installing the Antenna

The antenna can be installed in the following deployments:

Deployment Type	Description	Antenna Accessories Required
Transportation	The antenna is installed on a vehicle such as automobile, train, or other moving platform. The antenna is connected to a mobile router in the vehicle. **Note** This is the most common IoT installation scenario.	5G-ANTM-O-4-B antenna, accessories depend on the installation scenario.
Indoor ceiling mount	The antenna is installed on a grounded metal surface on a ceiling, and attached directly to a router.	5G-ANTM-GD
Indoor wall mount	The antenna is installed on a grounded metal bracket, on a drywall or wooden wall, and attached directly to a router.	5G-ANTM-BRACKET (mounting hardware included)
Outdoor wall mount	The antenna is installed outdoors on a metal bracket, on a brick or concrete wall, and attached directly to a router mounted indoors.	5G-ANTM-BRACKET (mounting hardware not included)

Contents of the Antenna Kit

The antenna kit contains:

- 1 x Cisco 5G-ANTM-O-4-B antenna
- SMA Plug (4x LTE/5G, GNSS)
- Reverse Polarity SMA Plug (4x Wi-Fi)

Optional items that are not included, but may be needed for installation:

- Ground Disc (5G-ANTM-GD): Required for ceiling mount only
- L-shape mounting bracket and accessories (5G-ANTM-BRACKET): Required for indoor/outdoor wall-mount

Tools and Equipment Required

In addition to the parts included in the antenna kit described in the previous section, you must provide the following tools to install the antenna:

- Open-ended wrench
- Electric drill

Note This list does not include the tools and equipment required to assemble and erect the tower, mast, or other structure you intend to mount your antenna on.

Mounting on a Ceiling

When choosing a location to mount the antenna, keep the following in mind:

- Attempt to center the antenna on a flat plane.
- Attempt to position the antenna so that it has 8 inches of flat plane in any given direction.
- Attempt to space at least 16 inches from an adjacent antenna or metallic structure and choose a location with gentle surface curves to ensure proper sealing.
- Ensure there is a space that is 2 inches deep and 2 inches in diameter below the mounting surface to allow sufficient clearance for the mounting stud, hardware, and cables.
- Ensure that the diameter of the hole is 1.00-1.06 inch.

Step 1 Select a mounting location with gentle surface curves to ensure a proper seal with 203.2 mm (8 inches) of ground plane in any given direction around the antenna. Position the antenna at least 406.4 mm (16 inches) from any adjacent antennas or metallic structures. Allow for 50.8 mm (2 inches) of clearance below the mounting surface for the mounting stud and cable routing. Ensure that there is 50.8 mm (2 inches) in diameter around the mounting hole for the mounting nut and tightening procedure.

Step 2 Drill a hole through the mounting surface where the center of the antenna is located, as shown in the following figure.

Figure 50: Mounting Hole Dimensions

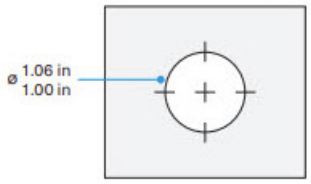

Step 3 Ensure that the hole is free of any burrs and sharp edges to prevent cable damage and VHB adhesive contamination during installation.

Step 4 Clean the mounting surface around the hole. The surface must be free of any debris that would otherwise prevent the inner VHB foam gasket from adhering, or the outer rubber gasket from forming a seal.

Step 5 Feed the cables and stud through the mounting surface hole and ground disc. Take care not to damage the jacket, and route them to the desired location. The following figure shows the cables and stud.

Figure 51: Side View

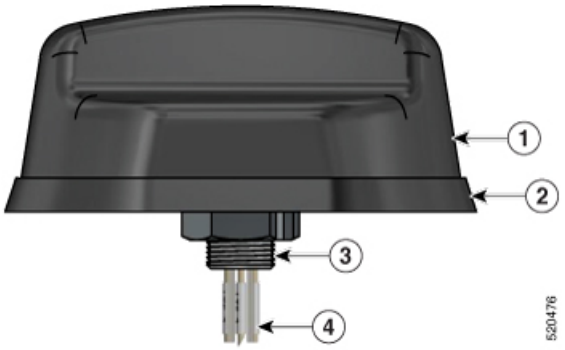

1	4 LTE/5G, 4 Wi-Fi, and GPS antennas inside black radome
2	VHB Compressed Foam Gasket
3	Mounting stud
4	Cables

Step 6 Remove the liner from the inner VHB foam gasket, insert the mounting stud through the hole, and position the antenna onto the mounting surface as shown in the following figure.

Figure 52: Bottom View

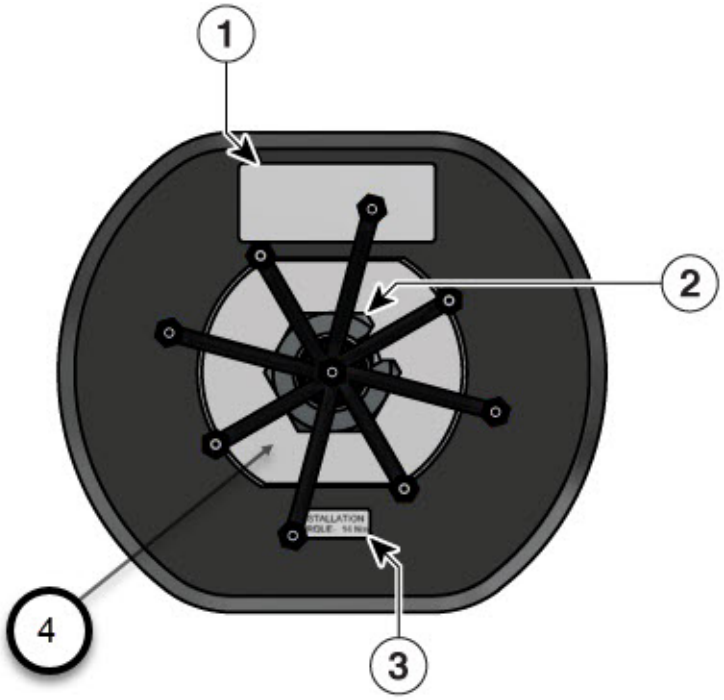

1	Product ID and Serialization Label
2	UNS Thread slotted lock-nut
3	Torque label
4	VHB Foam Gasket/Liner

Step 7 Beneath the mounting surface and ground disc, install the slotted lock nut onto the mounting stud. Hand tighten as shown in the following figure. Then tighten with a wrench until the antenna is fully seated, or with a torque wrench, tighten the nut to 14Nm (10.5 lbft) minimum.

Figure 53: Hand Tighten

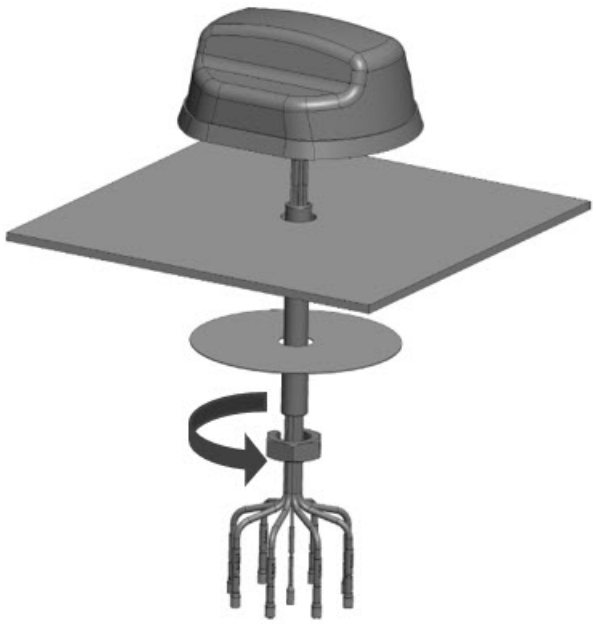

Step 8 Visually inspect the outer rubber gasket to ensure it has made a proper seal against the mounting surface and radome. If the locking nut includes a set screw locking feature, torque down the locking nut as directed above, then torque the set screw to 3.5 Nm (2.2 lbft).

Step 9 The completed antenna installation is shown in the following figure.

Figure 54: Completed Installation



What to do next

Connect the antenna to the device according to specific installation instructions for each product.

Mounting on an Indoor Wall (Drywall)

When choosing a location to mount the antenna, keep the following in mind:

- Attempt to center the antenna on a flat plane.
- Attempt to position the antenna so that it has 8 inches of flat plane in any given direction.
- Attempt to space at least 16 inches from an adjacent antenna or metallic structure and choose a location with gentle surface curves to ensure proper sealing.

For indoor drywall mounting, the following items are required:

- Plastic wall plugs (4x)
- 30mm long pan-head ST3.5 screws (4x)
- 12mm OD/1mm thick washers (4x)

Step 1 Drill the four 5mm diameter holes at 2.75in spacing, at a minimum depth of 35mm.

Figure 55: Mounting Hole Template

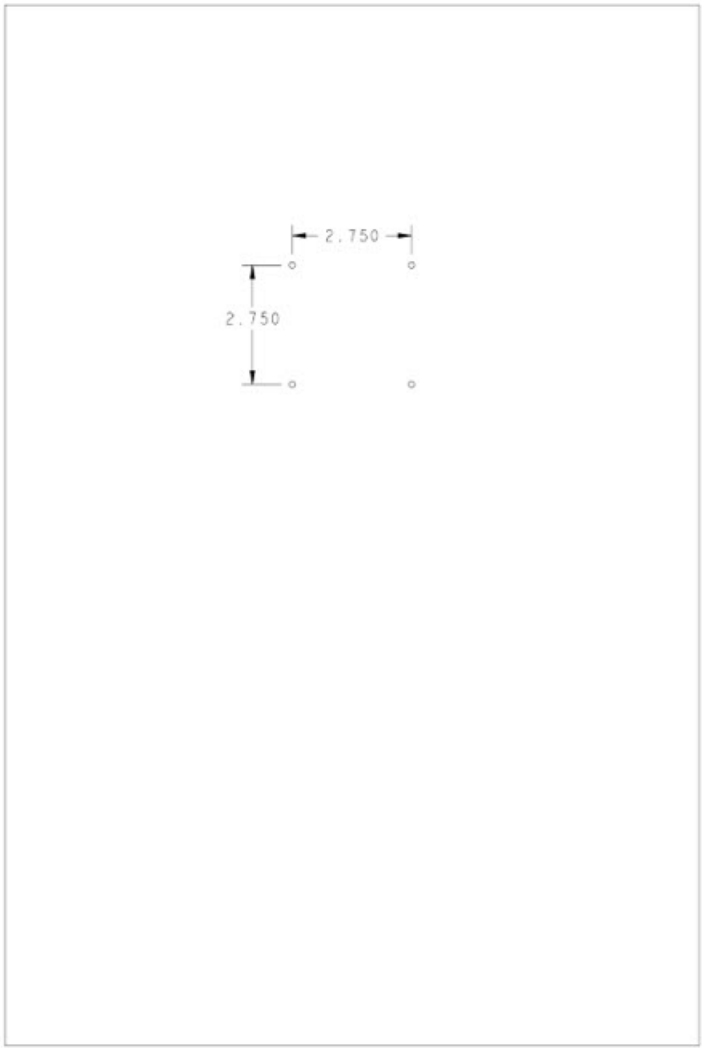

Step 2 Insert the plastic wall plugs into the holes until flushed with wall surface. The following figure shows an example of a plastic wall plug.

Figure 56: Plastic Wall Plug

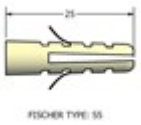

Step 3 Align the four holes on the L-shape mounting bracket with the four holes on the wall.

Figure 57: Attach Brackets

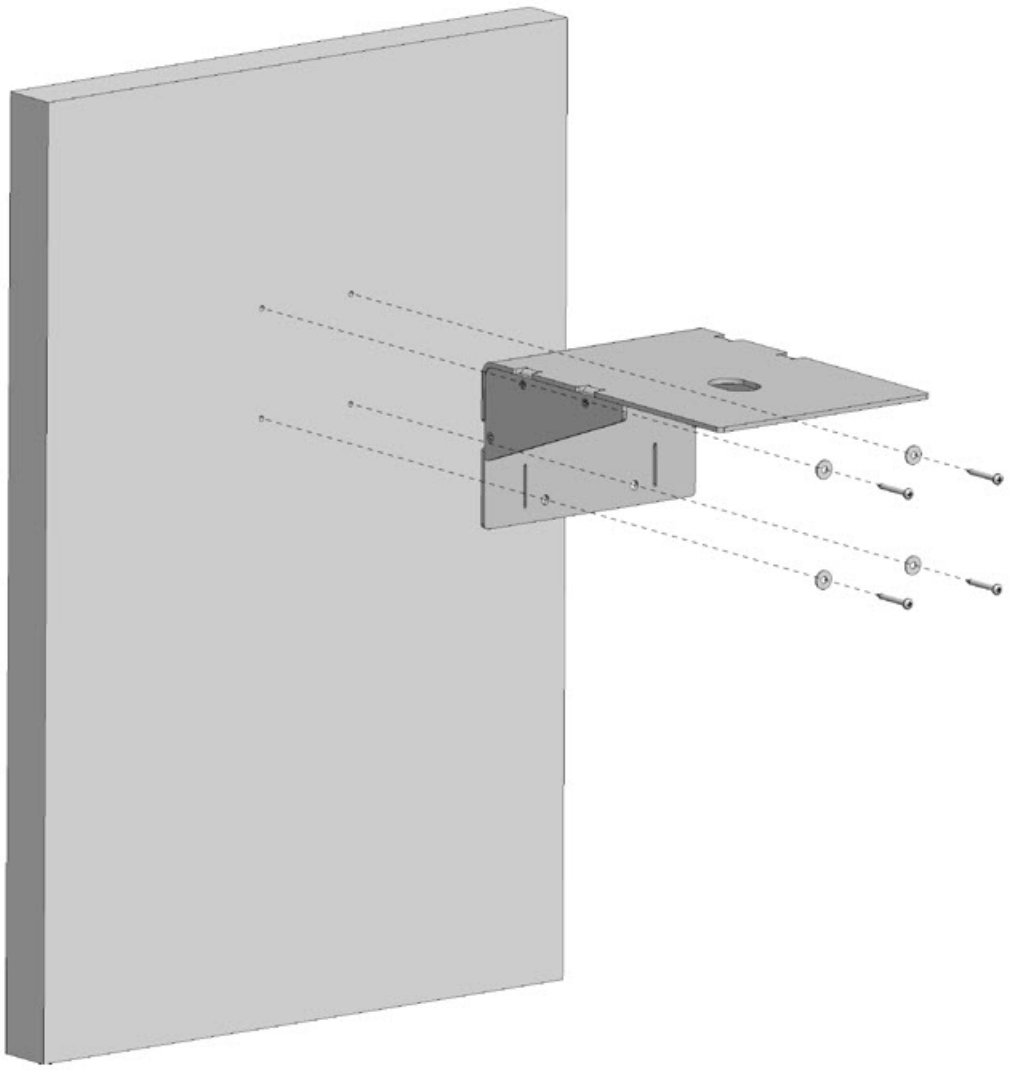

Step 4 Secure and tighten with provided screws and washers.

Step 5 Ensure that the hole is free of any burrs and sharp edges to prevent cable damage and VHB adhesive contamination during installation.

Step 6 Clean the mounting surface around the hole. The surface must be free of any debris that would otherwise prevent the inner VHB foam gasket from adhering, or the outer rubber gasket from forming a seal.

Step 7 Feed the cables and stud through the mounting surface hole taking care not to damage the jacket, and route them to desired location as shown in the following figure.

Figure 58: Side View

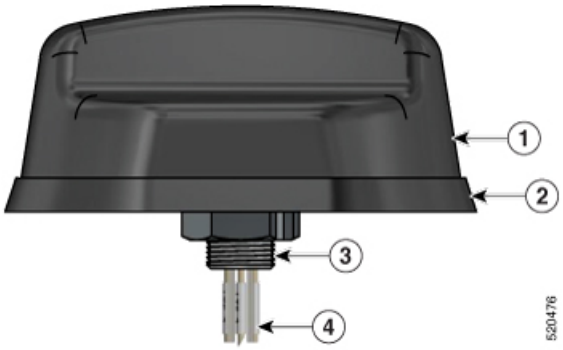

1	4 LTE/5G, 4 Wi-Fi, and GPS antennas inside black radome
2	VHB Compressed Foam Gasket
3	Mounting stud
4	Cables

Step 8 Remove the liner from the inner VHB foam gasket, insert the mounting stud through the hole, and position the antenna onto the mounting surface as shown in the following figure.

Figure 59: Bottom View

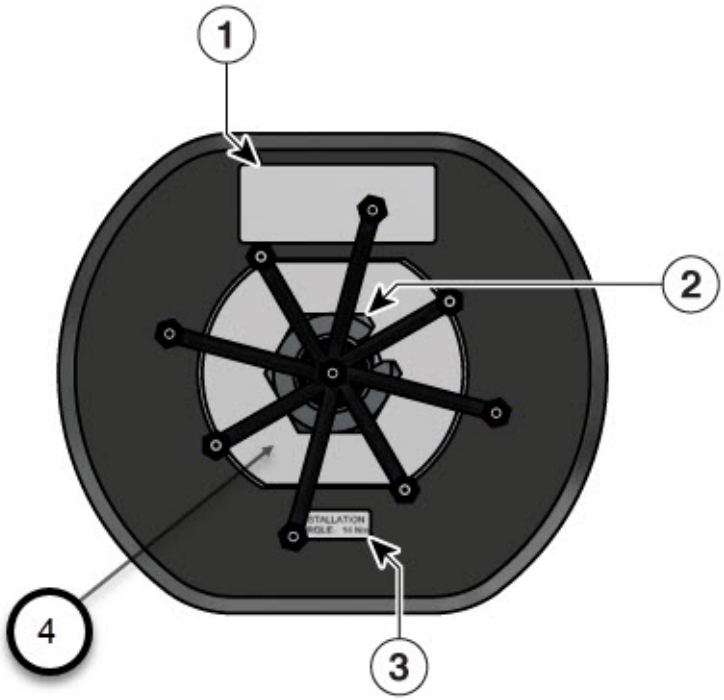

1	Product ID and Serialization Label

2	UNS Thread slotted lock-nut
3	Torque label
4	VHB Foam Gasket/Liner

Step 9 Beneath the mounting surface, install the slotted lock nut onto the mounting stud and hand tighten as shown in the following figure. Then wrench tighten until antenna is fully seated, or with a torque wrench, tighten the nut to 14Nm (10.5 lbft) minimum.

Figure 60: Hand Tighten

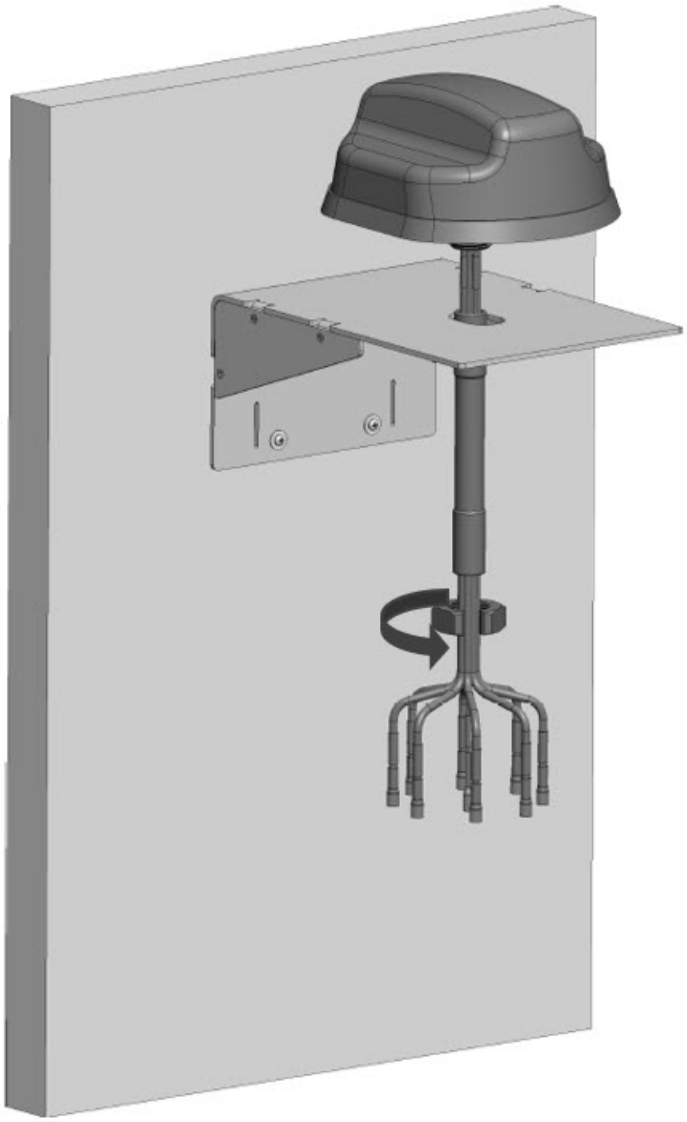

Step 10 Visually inspect the outer rubber gasket. Ensure it has made a proper seal against the mounting surface and radome. If the locking nut includes a set screw locking feature, torque down the locking nut as directed above, then torque the set screw to 3.5 Nm (2.2 lbft).

Step 11 The completed antenna installation is shown in the following figure.

Figure 61: Completed Installation

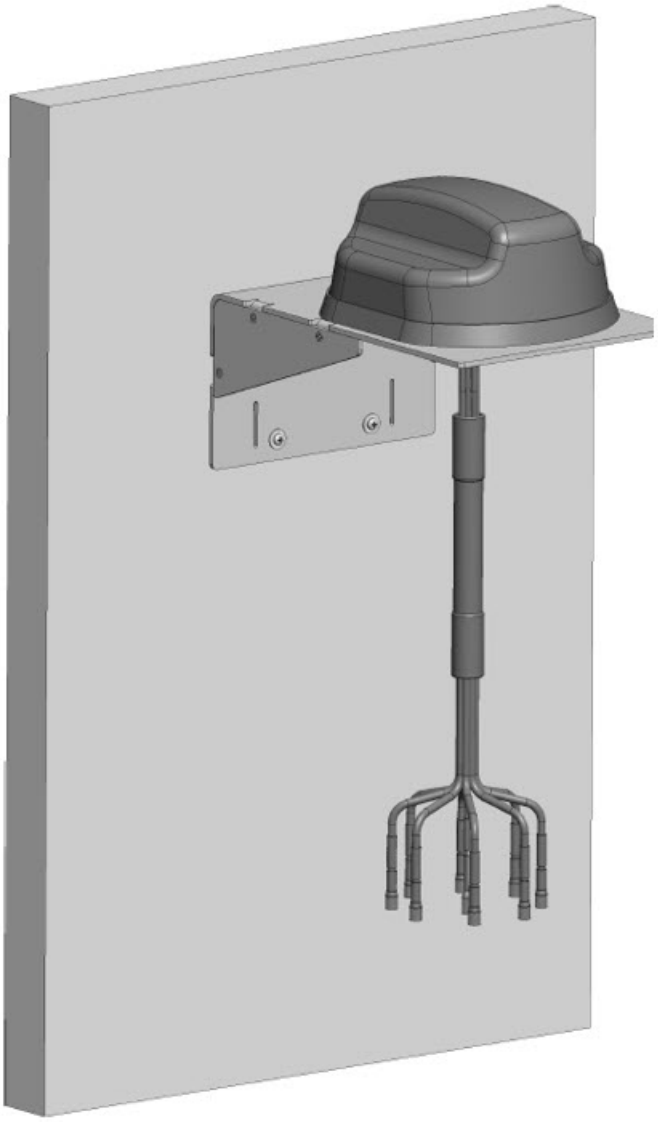

Mounting on an Indoor Wall (Wood Surface or Stud)

When choosing a location to mount the antenna, keep the following in mind:

- Attempt to center the antenna on a flat plane.

- Attempt to position the antenna so that it has 8 inches of flat plane in any given direction.
- Attempt to space at least 16 inches from an adjacent antenna or metallic structure and choose a location with gentle surface curves to ensure proper sealing.

For indoor wood surface or stud mounting, the following items are required:

- 30mm long pan-head ST3.5 screws (4x)
- 12mm OD/1mm thick washers (4x)

Step 1 Mark the location of four holes at 2.75in spacing on the wall.

Figure 62: Mounting Hole Template

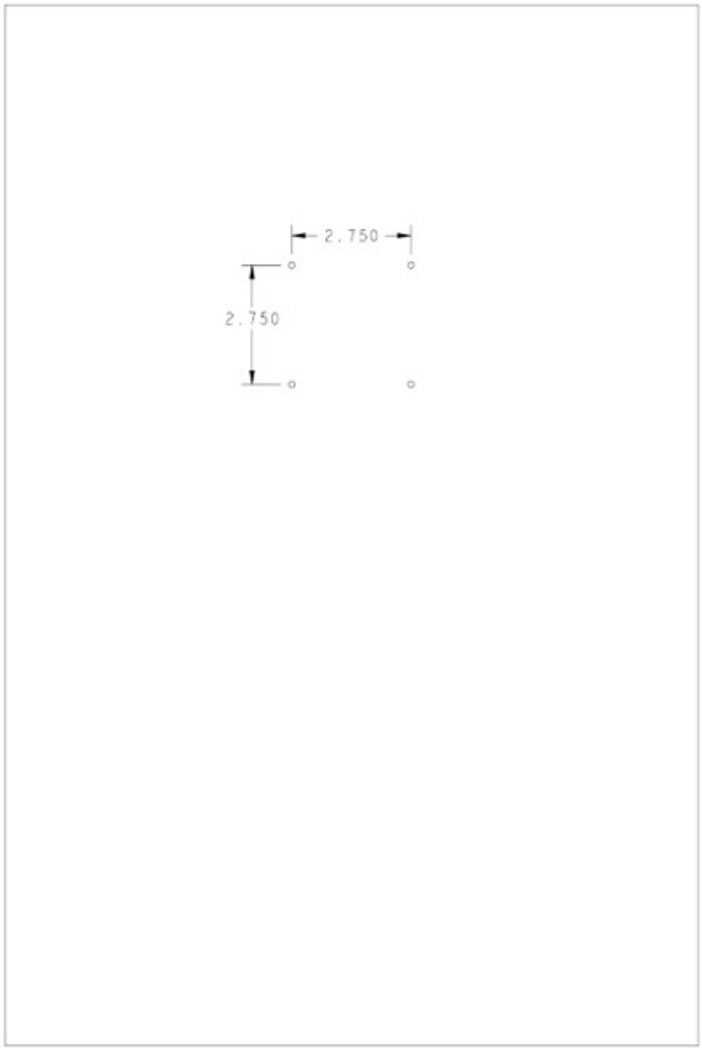

Step 2 Align the four holes on the L-shape mounting bracket with the four holes on the wall.

Figure 63: Attach Brackets

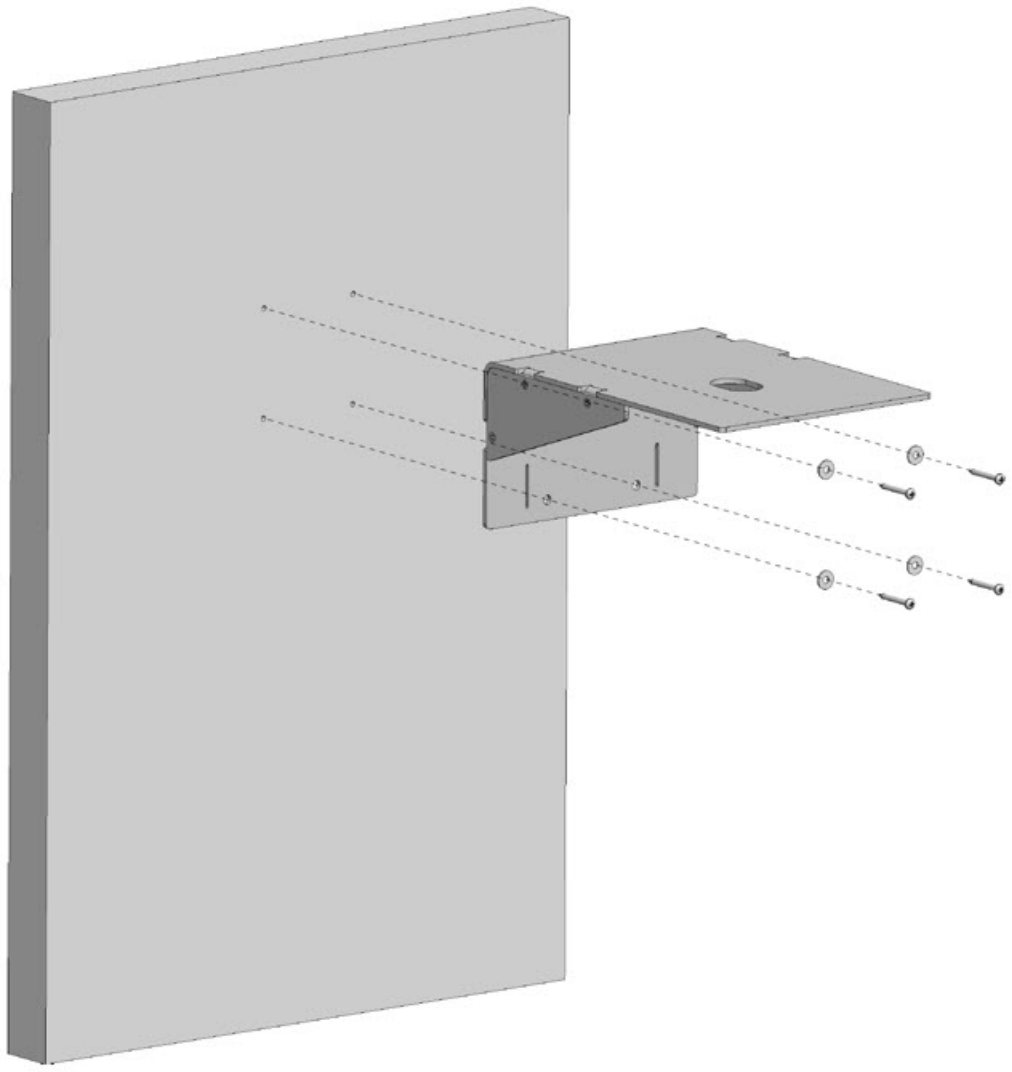

Step 3 Secure and tighten with provided screws and washers.

Step 4 Ensure that the hole is free of any burrs and sharp edges to prevent cable damage and VHB adhesive contamination during installation.

Step 5 Clean the mounting surface around the hole. The surface must be free of any debris that would otherwise prevent the inner VHB foam gasket from adhering, or the outer rubber gasket from forming a seal.

Step 6 Feed the cables and stud through the mounting surface hole, taking care not to damage the jacket, and route them to desired location as shown in the following figure.

Figure 64: Side View

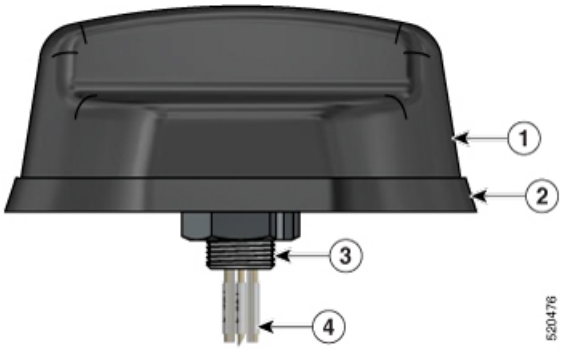

1	4 LTE/5G, 4 Wi-Fi, and GPS antennas inside black radome
2	VHB Compressed Foam Gasket
3	Mounting stud
4	Cables

Step 7 Remove the liner from the inner VHB foam gasket, insert the mounting stud through the hole, and position the antenna onto the mounting surface as shown in the following figure.

Figure 65: Bottom View

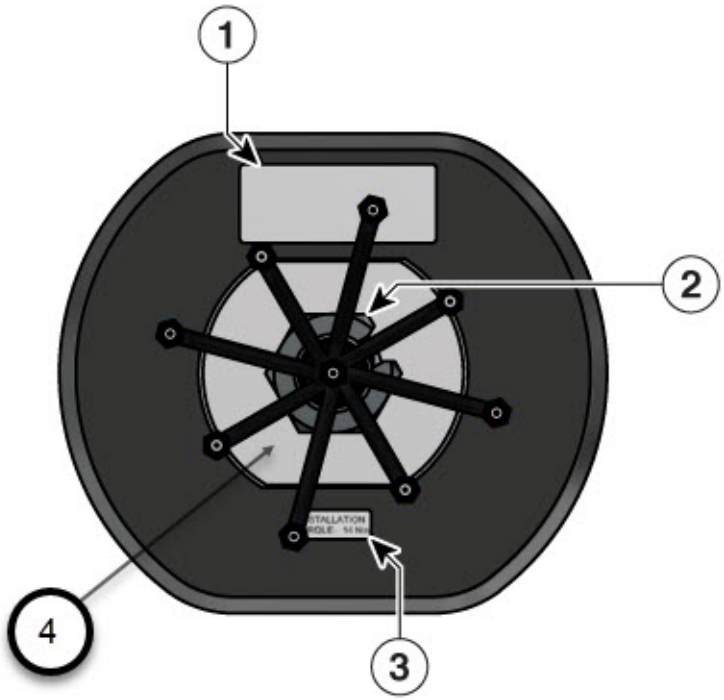

1	Product ID and Serialization Label

2	UNS Thread slotted lock-nut
3	Torque label
4	VHB Foam Gasket/Liner

Step 8 Beneath the mounting surface, install the slotted lock nut onto the mounting stud and hand tighten as shown in the following figure. Then wrench tighten until antenna is fully seated, or with a torque wrench, tighten the nut to 14Nm (10.5 lbft) minimum.

Figure 66: Hand Tighten

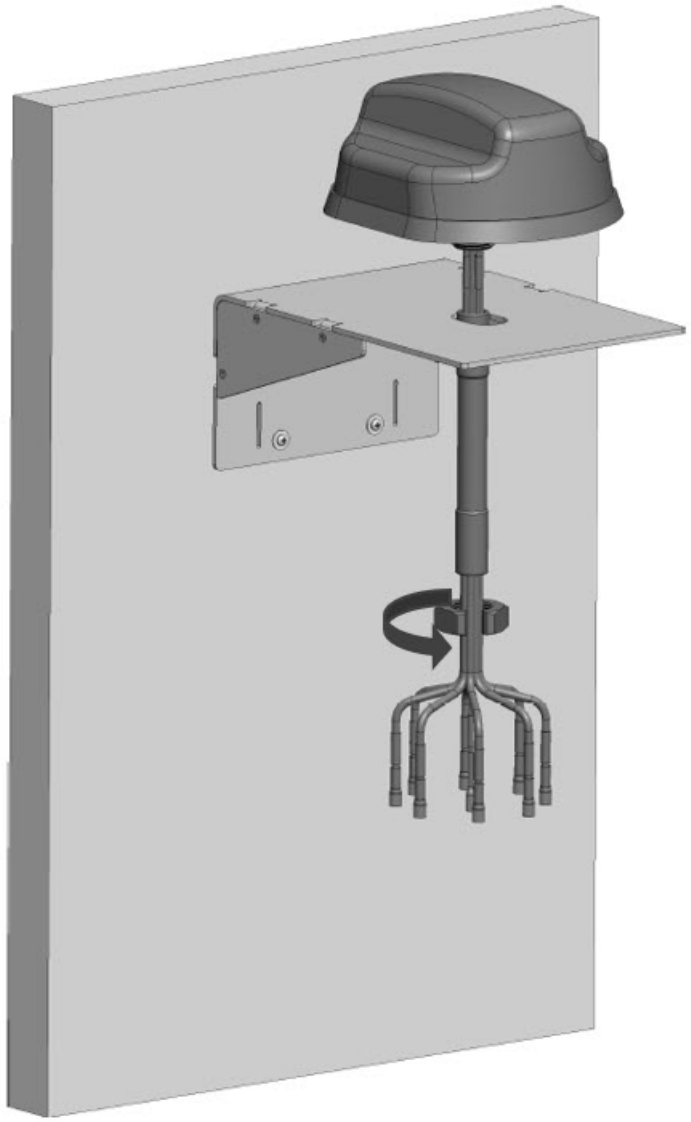

Step 9 Visually inspect the outer rubber gasket. Ensure it has made a proper seal against the mounting surface and radome. If the locking nut includes a set screw locking feature, torque down the locking nut as directed above, then torque the set screw to 3.5 Nm (2.2 lbft).

Step 10 The completed antenna installation is shown in the following figure.

Figure 67: Completed Installation

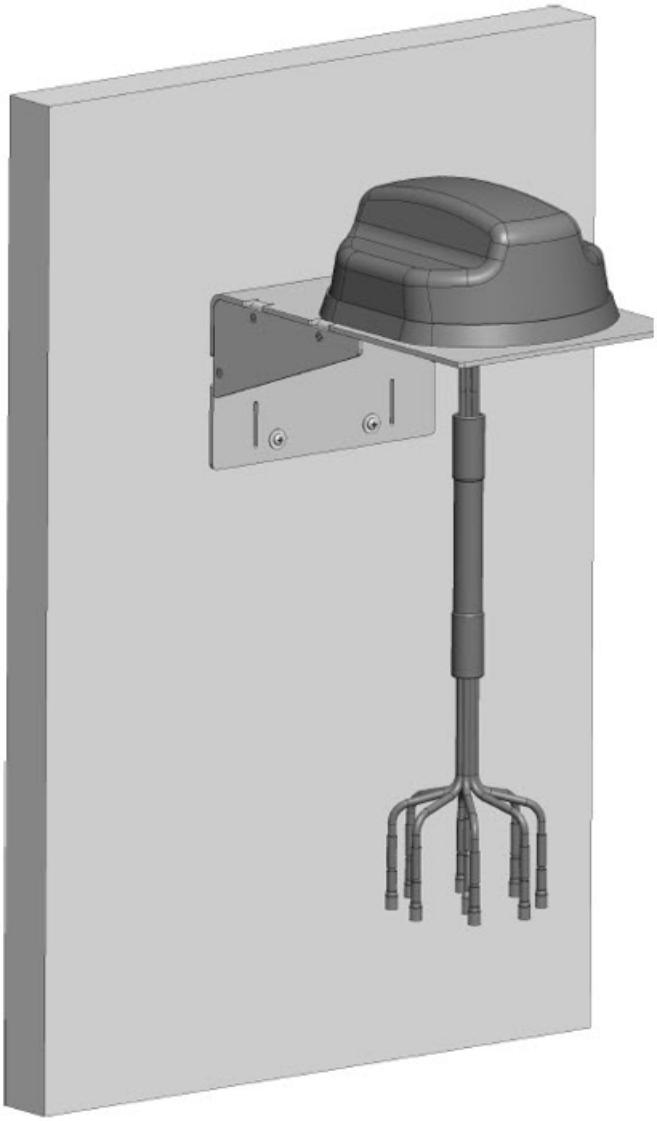

Mounting on an Outdoor Wall

When choosing a location to mount the antenna, keep the following in mind:

- Attempt to center the antenna on a flat plane.

- Attempt to position the antenna so that it has 8 inches of flat plane in any given direction.
- Attempt to space at least 16 inches from an adjacent antenna or metallic structure and choose a location with gentle surface curves to ensure proper sealing.

For outdoor brick or cement mounting, the following items are required:

- 3/16in hex washer head concrete screws, 1 1/4in in length or longer. (not provided)

Step 1 Drill four pilot holes at 2.75in spacing appropriate for your mounting surface and environment.

Step 2 Align the four holes on the L-shape mounting bracket with the four holes on the wall.

Figure 68: Attach Brackets

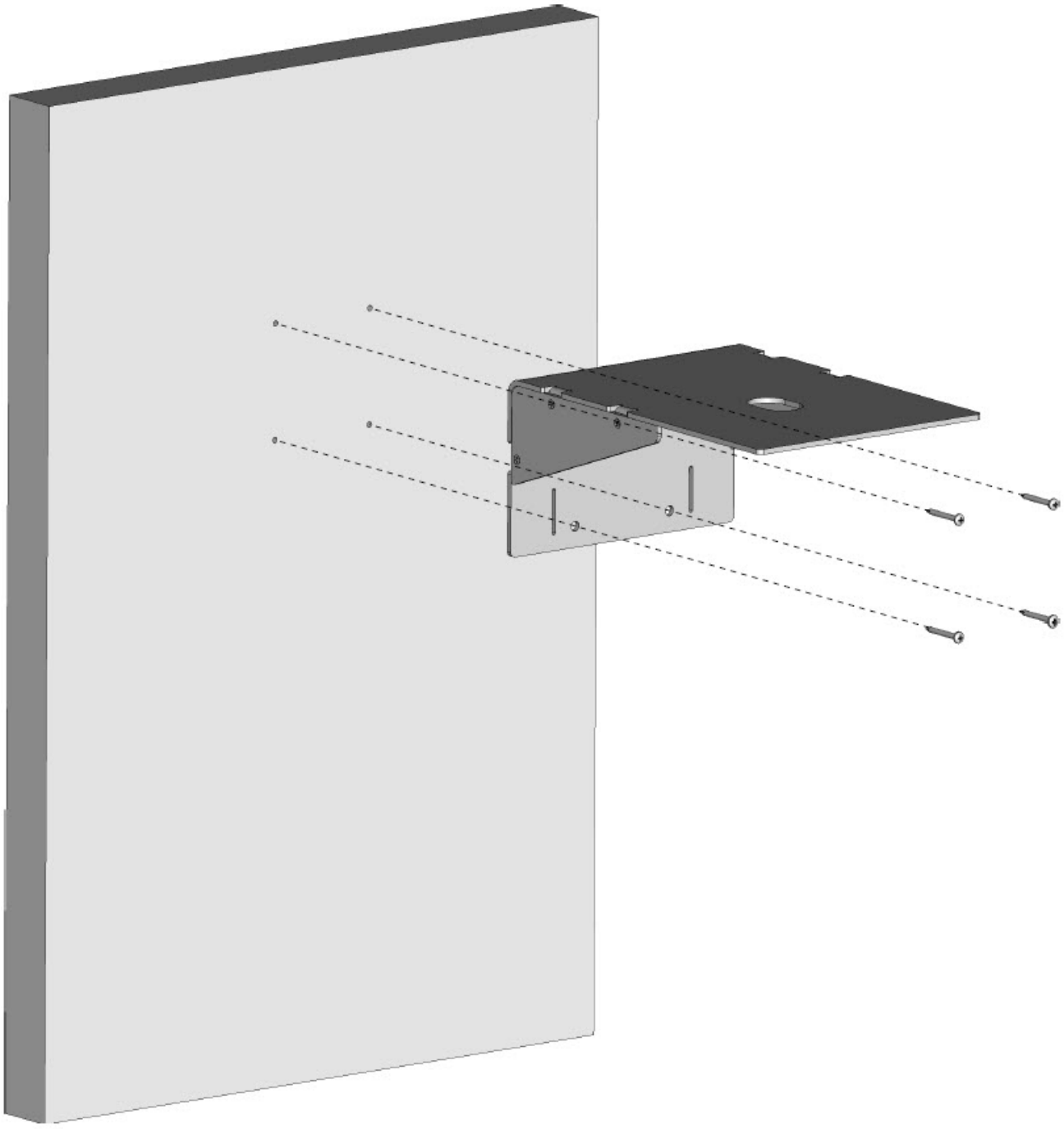

Step 3 Using the four concrete screws, secure and tighten with a 3/16in hex head driver.

Note An access hole through the wall must be created to connect the outdoor antenna to an indoor router

Step 4 Ensure that the hole is free of any burrs and sharp edges to prevent cable damage and VHB adhesive contamination during installation.

Step 5 Clean the mounting surface around the hole. The surface must be free of any debris that would otherwise prevent the inner VHB foam gasket from adhering, or the outer rubber gasket from forming a seal.

Step 6 Feed the cables and stud through the mounting surface hole, taking care not to damage the jacket, and route them to desired location as shown in the following figure.

Figure 69: Side View

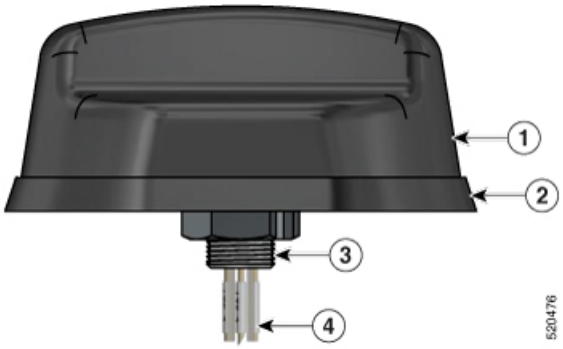

1	4 LTE/5G, 4 Wi-Fi, and GPS antennas inside black radome
2	VHB Compressed Foam Gasket
3	Mounting stud
4	Cables

Step 7 Remove the liner from the inner VHB foam gasket, insert the mounting stud through the hole, and position the antenna onto the mounting surface as shown in the following figure.

Figure 70: Bottom View

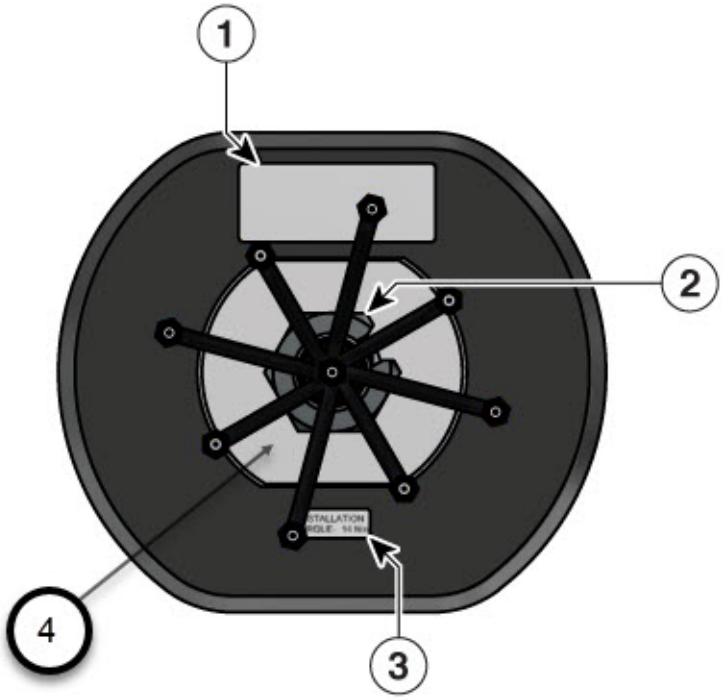

1	Product ID and Serialization Label
2	UNS Thread slotted lock-nut
3	Torque label
4	VHB Foam Gasket/Liner

Step 8 Beneath the mounting surface, install the slotted lock nut onto the mounting stud and hand tighten as shown in the following figure. Then wrench tighten until antenna is fully seated, or with a torque wrench, tighten the nut to 14Nm (10.5 lbft) minimum.

Figure 71: Hand Tighten

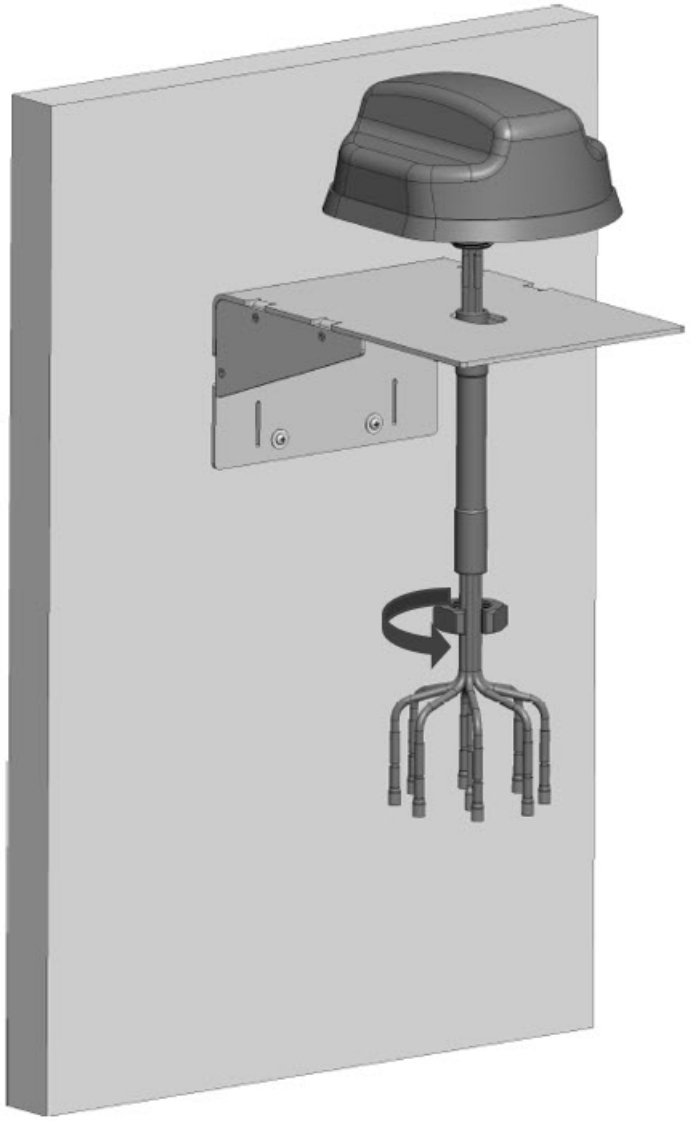

Step 9 Visually inspect the outer rubber gasket. Ensure it has made a proper seal against the mounting surface and radome. If the locking nut includes a set screw locking feature, torque down the locking nut as directed above, then torque the set screw to 3.5 Nm (2.2 lbft).

Step 10 The completed antenna installation is shown in the following figure.

Figure 72: Completed Installation

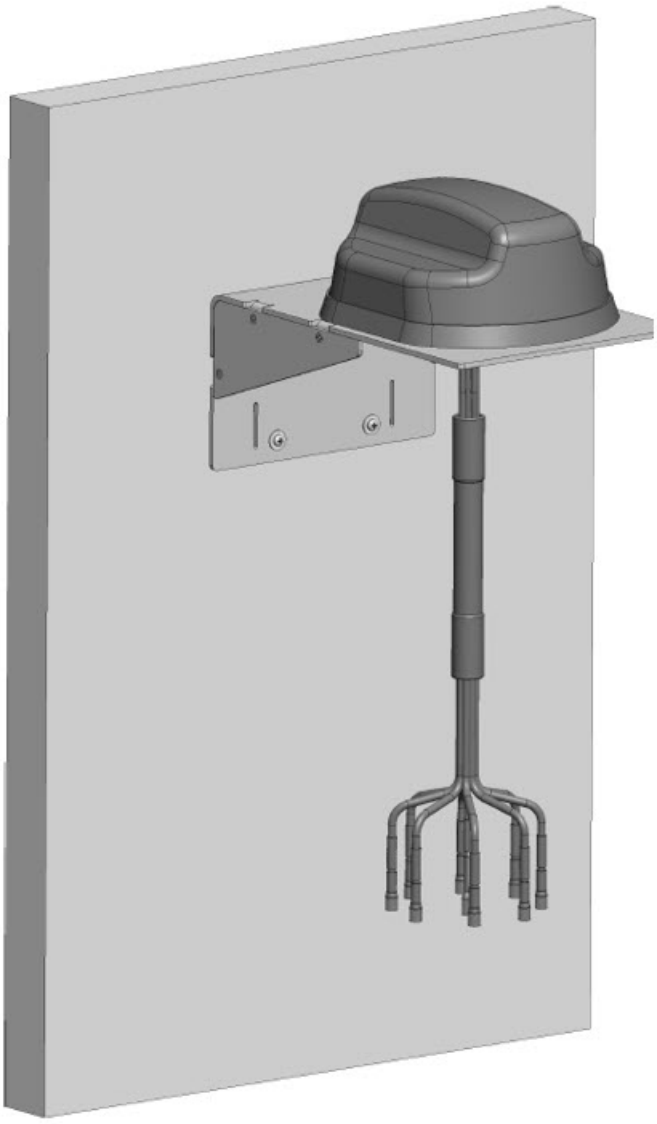

Connecting the Antenna to the Router

To attach the router-end of the cable to your router, please see your platforms Hardware Installation Guide.

Note Coaxial cable loses efficiency as the frequency increases, resulting in signal loss. The cable should be kept as short as possible because cable length also determines the amount of signal loss—the longer the cable length or run, the greater the loss).

Communications, Services, and Additional Information

- To receive timely, relevant information from Cisco, sign up at Cisco Profile Manager.
- To get the business impact you're looking for with the technologies that matter, visit Cisco Services.
- To submit a service request, visit Cisco Support.
- To discover and browse secure, validated enterprise-class apps, products, solutions, and services, visit Cisco DevNet.
- To obtain general networking, training, and certification titles, visit Cisco Press.
- To find warranty information for a specific product or product family, access Cisco Warranty Finder.

Cisco Bug Search Tool

Cisco Bug Search Tool (BST) is a web-based tool that acts as a gateway to the Cisco bug tracking system that maintains a comprehensive list of defects and vulnerabilities in Cisco products and software. BST provides you with detailed defect information about your products and software.

Documentation Feedback

To provide feedback about Cisco technical documentation, use the feedback form available in the right pane of every online document.

Cisco Support Community

Cisco Support Community is a forum for you to ask and answer questions, share suggestions, and collaborate with your peers. Join the forum at https://supportforums.cisco.com/index.jspa.

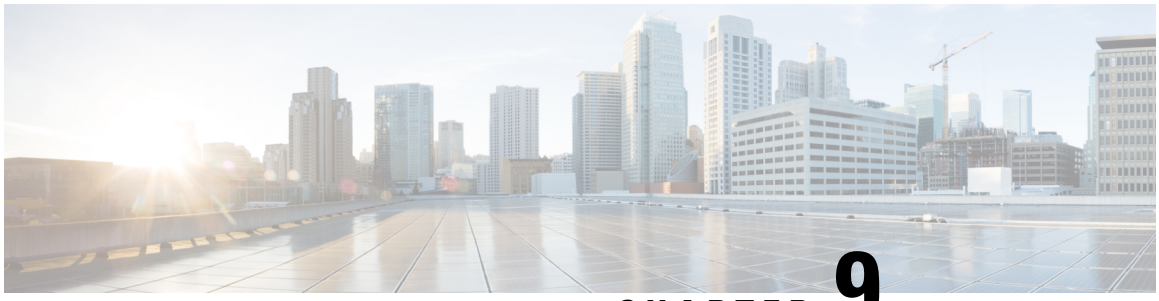

CHAPTER 9

Cisco Multi-Band Swivel Mount Dipole Antenna (5G-ANTM-SMA-D)

This chapter contains the following sections:

- Overview, on page 163
- Technical Specifications, on page 164
- Standalone Antenna Performance, on page 165
- Gain Plots, on page 167
- Mechanical Drawing, on page 173
- Installation Notes, on page 174
- General Safety Precautions, on page 174
- Guidelines to Achieving Optimal RF and Antenna Performance, on page 176
- Mounting the Antenna, on page 179
- Tools and Equipment Required, on page 180
- Choosing a Mounting Location, on page 180
- Communications, Services, and Additional Information, on page 180

Overview

This document describes the Cisco Multi-Band Swivel Mount Dipole Antenna (5G-ANTM-SMA-D), from here on referred to as "The Antenna". The antenna is designed for IoT devices with the following applications:

- 5G NR FR1 radios
- 2G/3G/4G radios
- Gateways, set top boxes, security
- Optimized for straight and 90deg bent positions

The following graphic shows the antenna:



Technical Specifications

Antenna Type	Dipole
Operating Frequency Range	617-960 MHz 1430-3500 MHz 3500-6000 MHz
Nominal Impedance	50 Ohms
Return Loss	-5 dB (or better) across all bands
Gain (617-960 MHz)	1.2 dBi+/-1.2 dB
Gain (1430-3500 MHz)	2.5 dBi+/-1.5 dB

Gain (3500-6000 MHz)	5.5 dBi+/-3.5 dB
Average efficiency (617-960 MHz)	45%
Average Efficiency (1430-3500 MHz)	65%
Average Efficiency (3500-6000 MHz)	70%
Radiation Pattern	Omni
Horizontal Plane	Omni
Polarization	Vertical
Power withstanding	3 W
ESD Protection	DC Grounded
Total Length (straight)	8.8 in (223.5mm)
Width	1.2 in (30.45mm)
Weight	1.7 oz (50 g)
Connector	SMA-Male
Installation Torque	Initial Torque: < 3 Ozf-in Mated Torque: 12~21 Ozf-in
Operational Temperature	-40° to +185°F (-40°C to +85°C)
Storage Temperature	-40° to +185°F (-40°C to +85°C)
Ingress Protection	IP65
Salt Mist	96 Hours
RoHS Compliant	Yes

Standalone Antenna Performance

The 5G-ANTM-SMA-D performance patterns are shown in the following sections:

Return Loss (Straight)

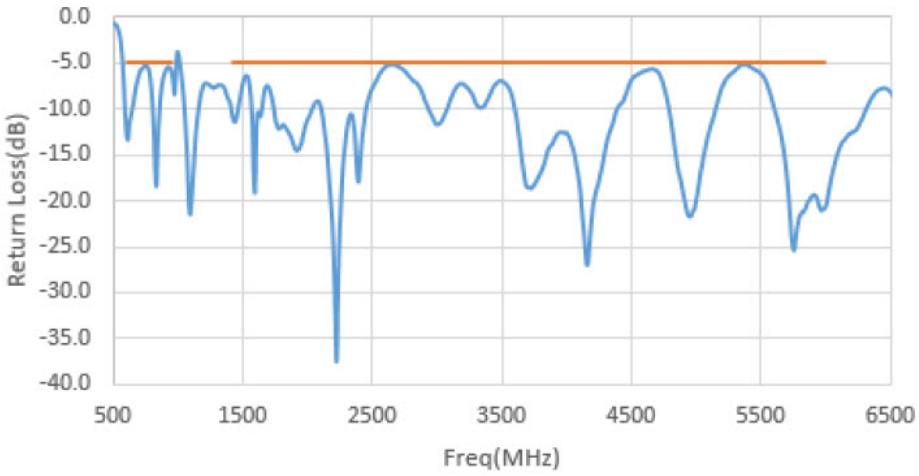

Return Loss (Bending)

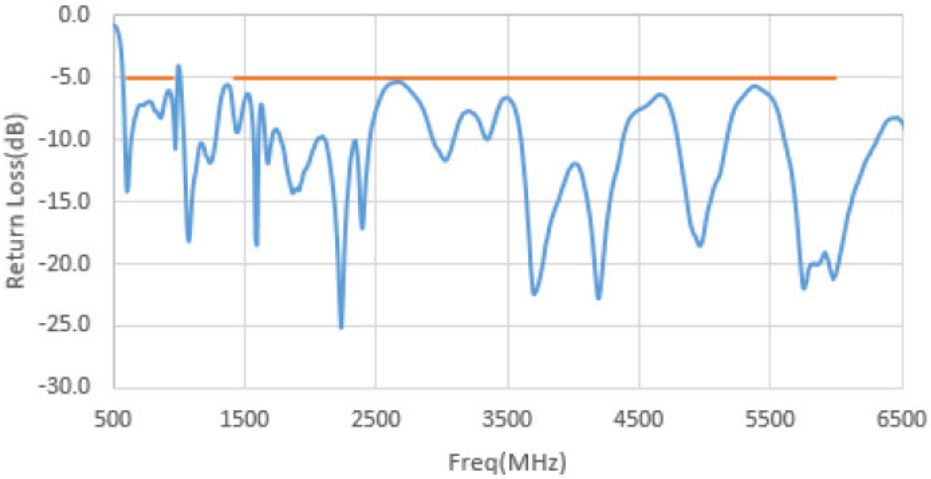

Efficiency

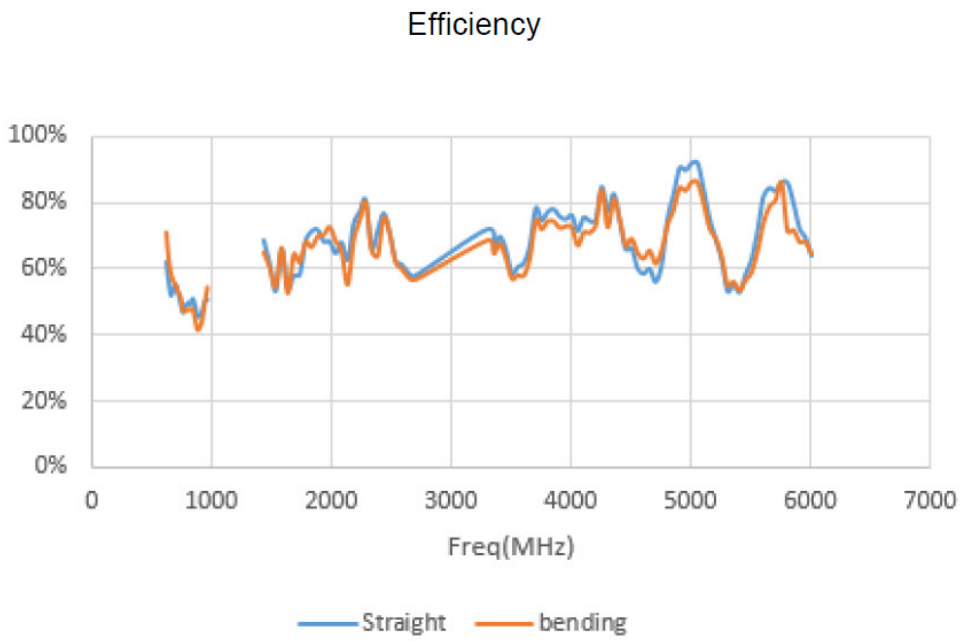

Peak Gain

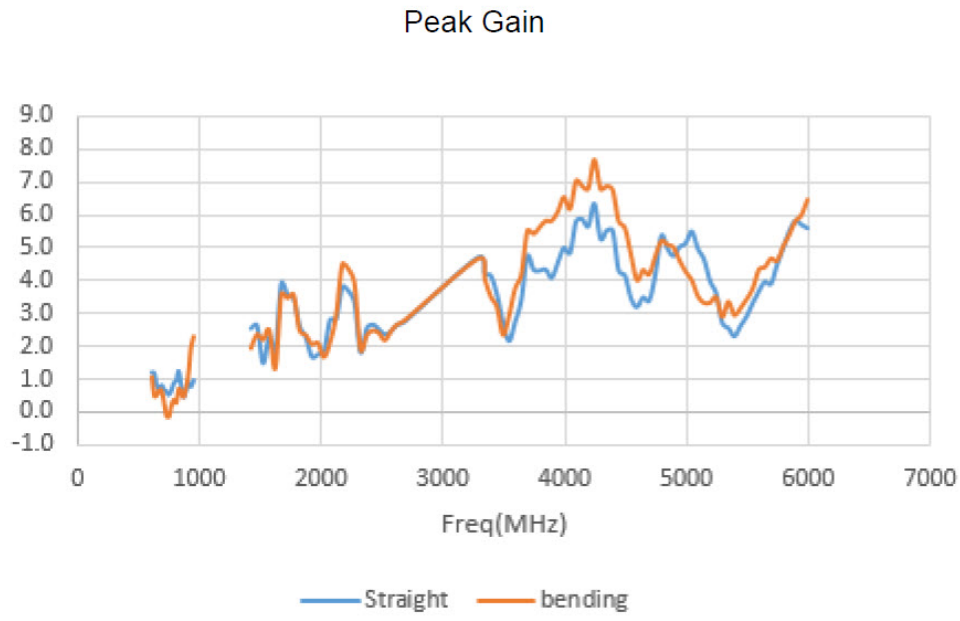

Gain Plots

The 5G-ANTM-SMA-D Plane plots are shown in the following series of graphics:

Gain Plots (bend) 617-960 MHz

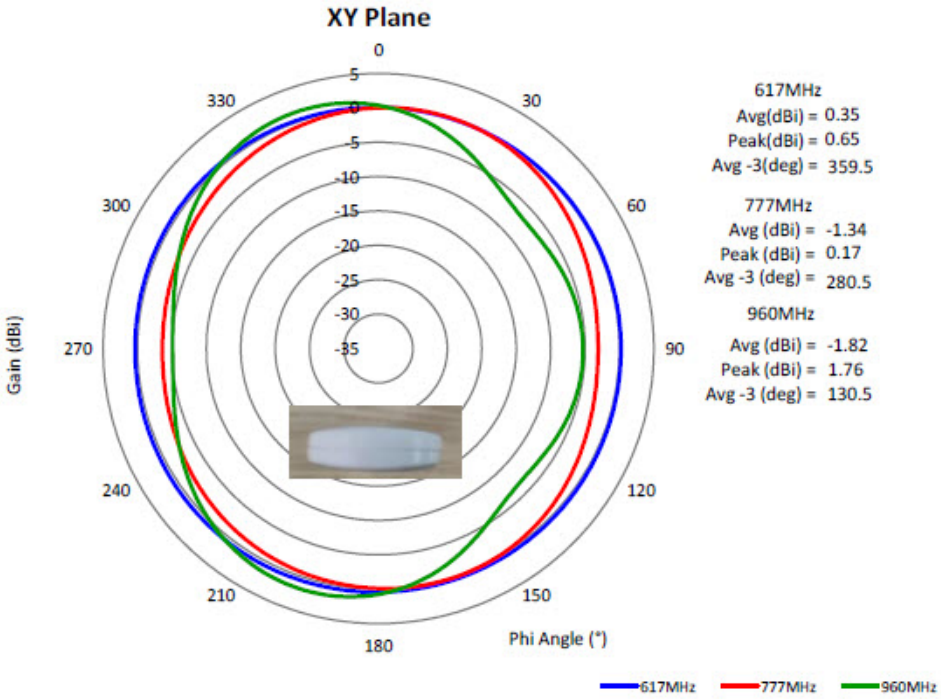

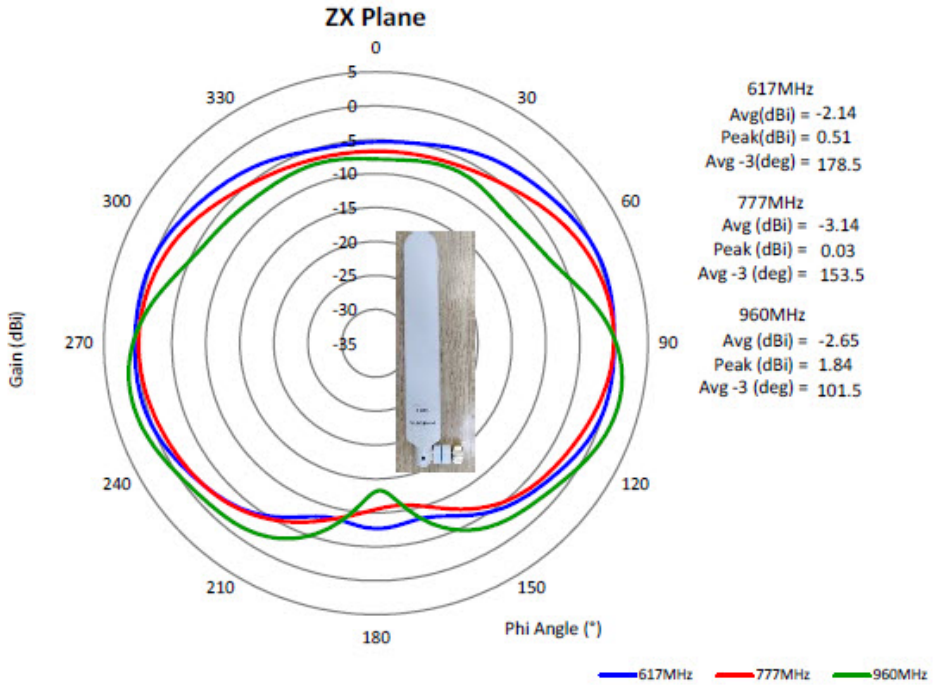

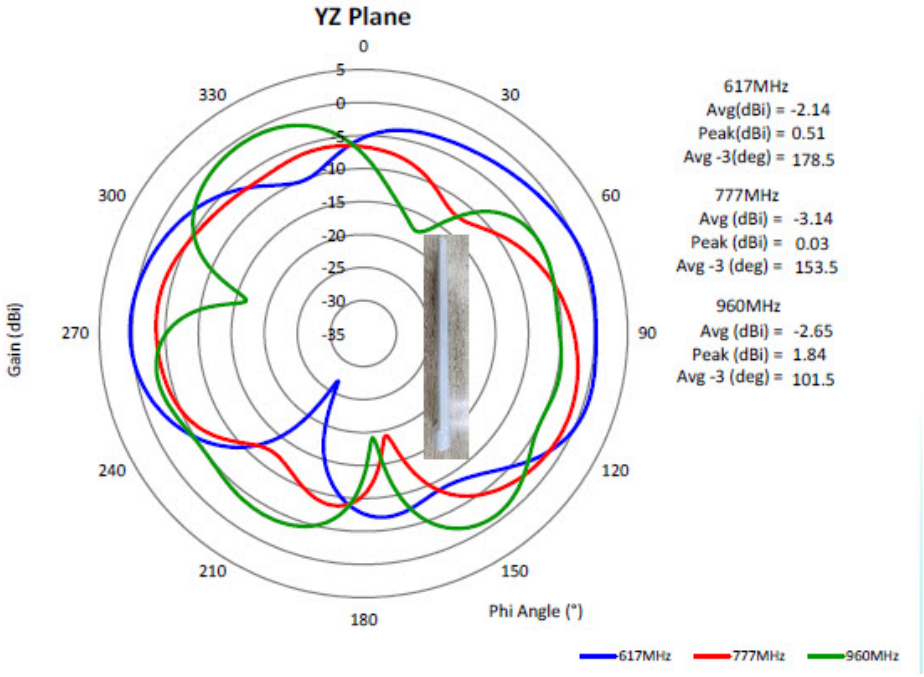

Gain Plots (bend) 1430-6000 MHz

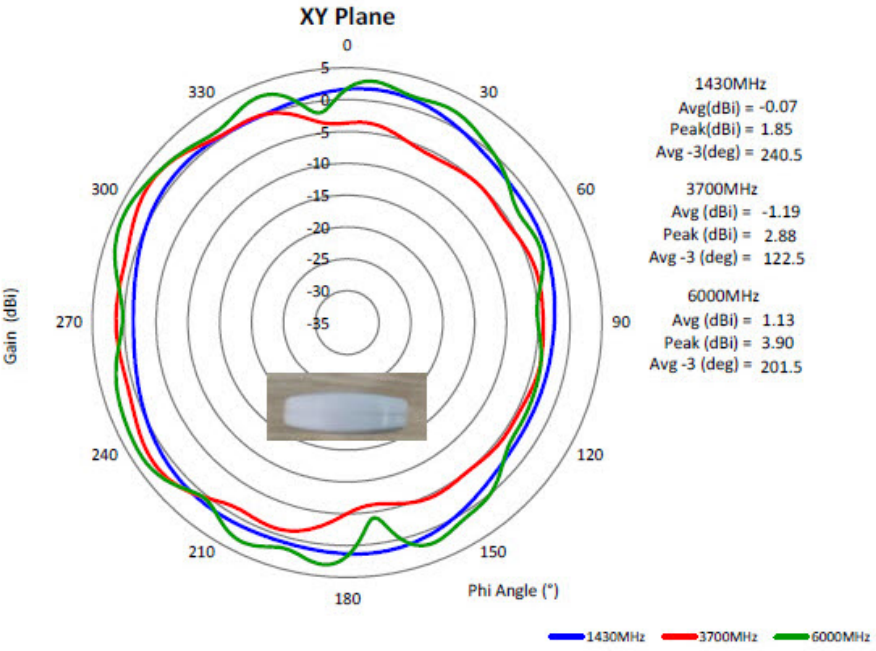

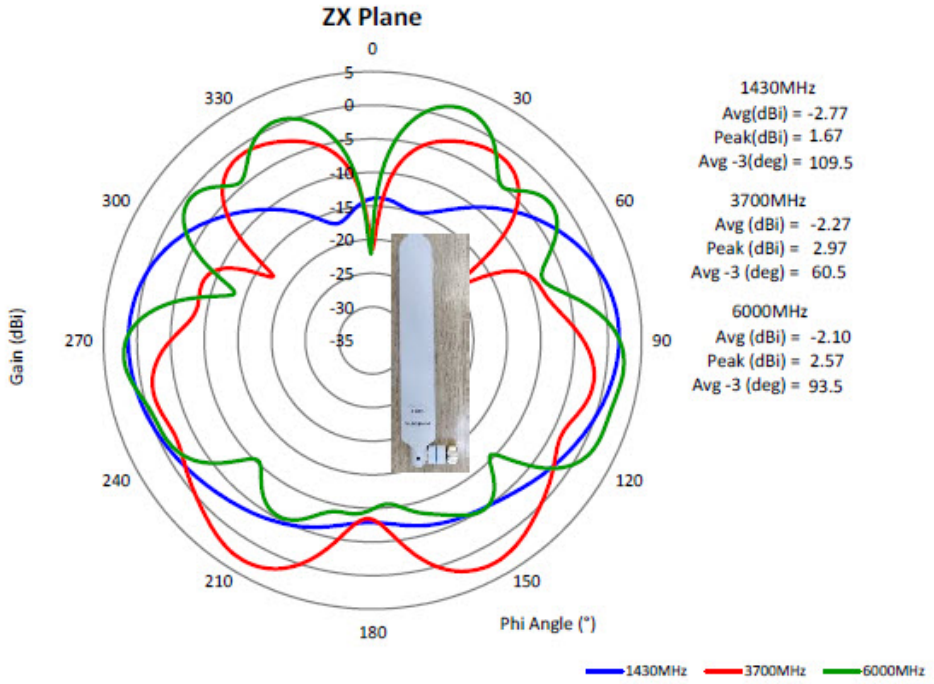
ZX Plane
0
30
60
90
120
150
180
210
240
270
300
330
5
0
-5
-10
-15
-20
-25
-30
-35
Gain (dBi)
Phi Angle (°)
1430MHz
Avg(dBi) = -2.77
Peak(dBi) = 1.67
Avg -3(deg) = 109.5
3700MHz
Avg (dBi) = -2.27
Peak (dBi) = 2.97
Avg -3 (deg) = 60.5
6000MHz
Avg (dBi) = -2.10
Peak (dBi) = 2.57
Avg -3 (deg) = 93.5
1430MHz
3700MHz
6000MHz

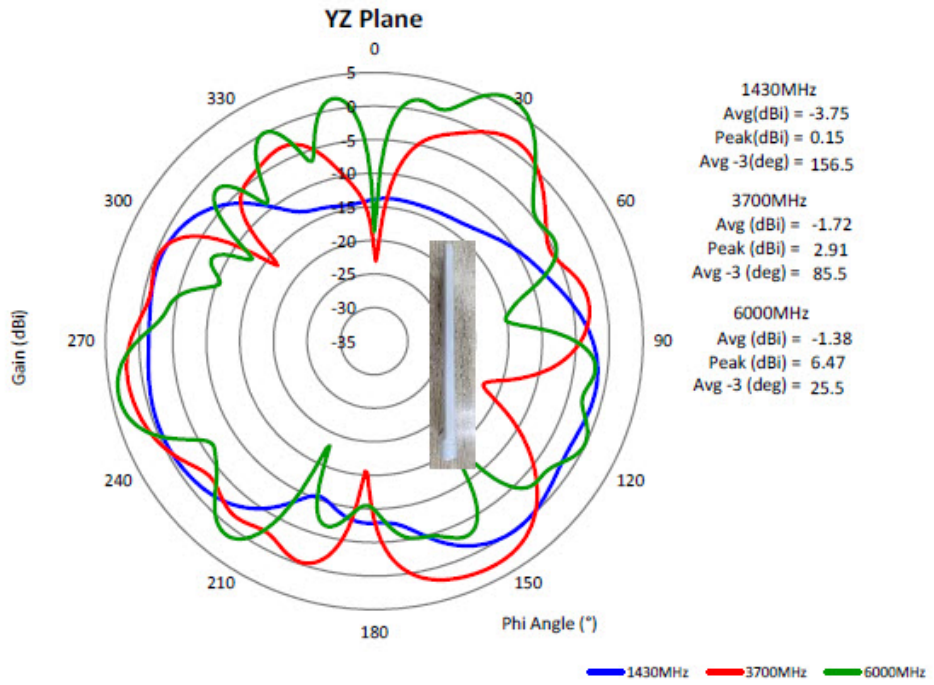
YZ Plane
0
30
60
90
120
150
180
210
240
270
300
330
5
0
-5
-10
-15
-20
-25
-30
-35
Gain (dBi)
Phi Angle (°)
1430MHz
Avg(dBi) = -3.75
Peak(dBi) = 0.15
Avg -3(deg) = 156.5
3700MHz
Avg (dBi) = -1.72
Peak (dBi) = 2.91
Avg -3 (deg) = 85.5
6000MHz
Avg (dBi) = -1.38
Peak (dBi) = 6.47
Avg -3 (deg) = 25.5
1430MHz
3700MHz
6000MHz

Gain Plots (straight) 617-960 MHz

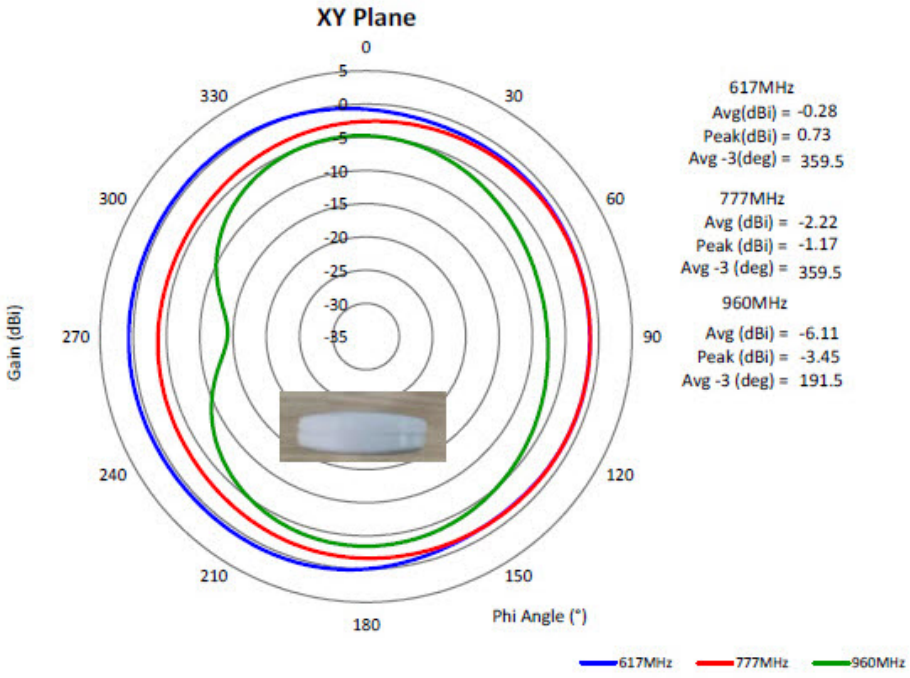

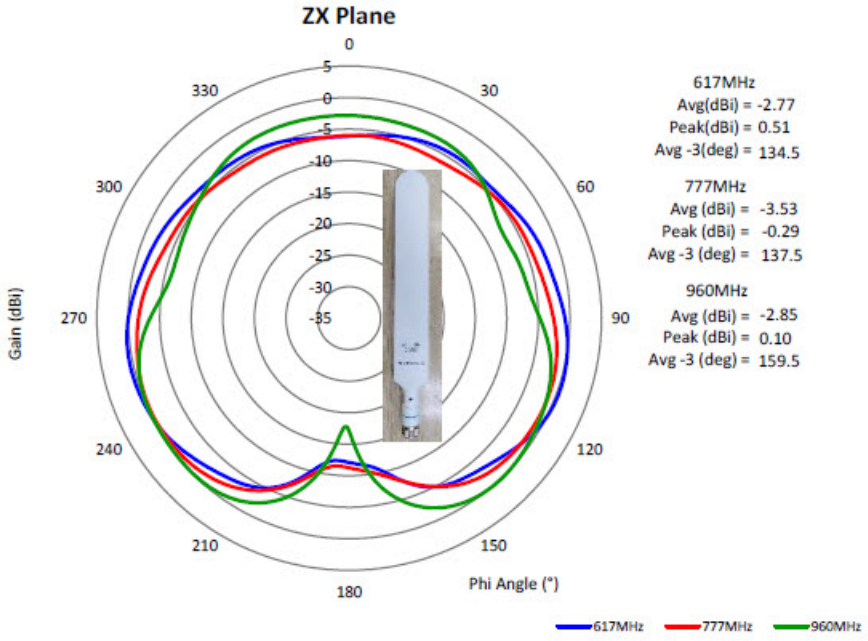

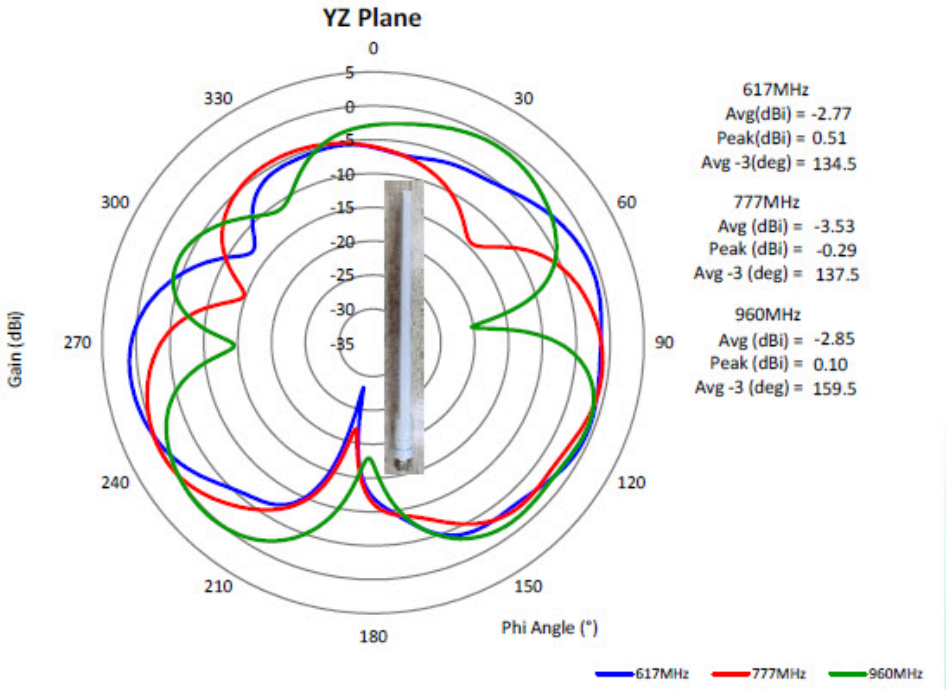

Gain Plots (straight) 1430-6000 MHz

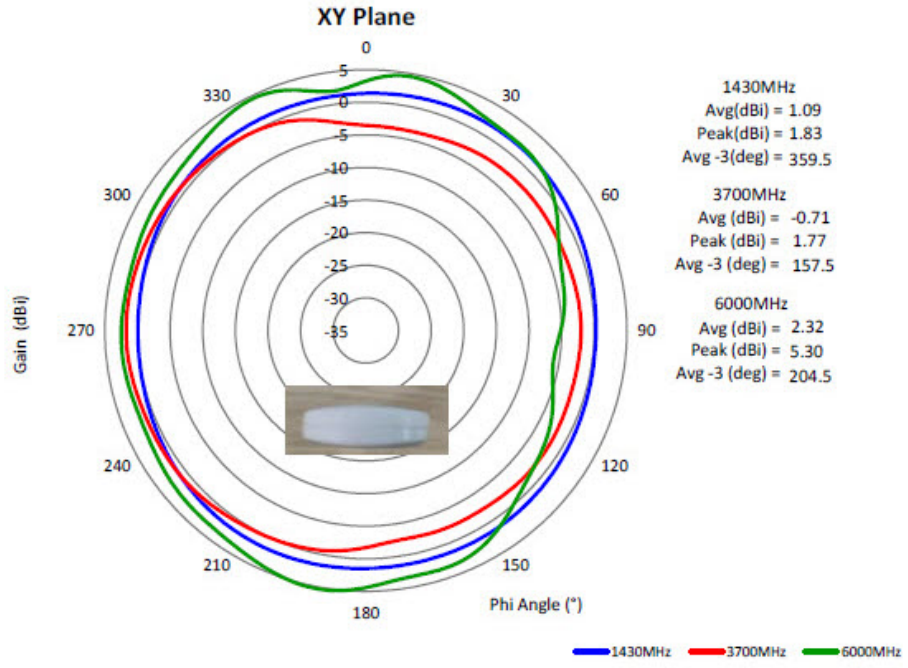

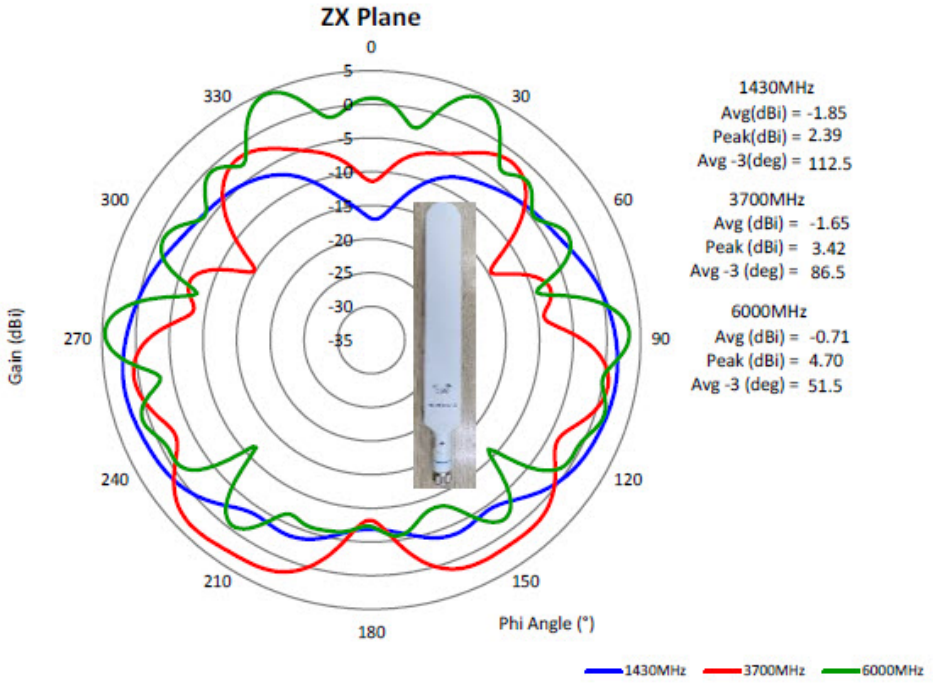

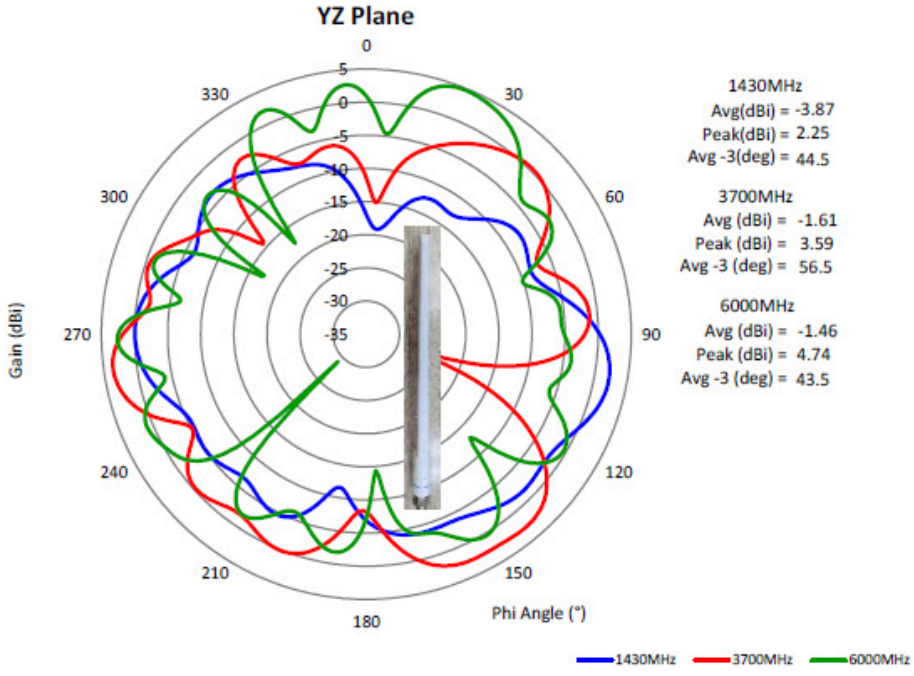

Mechanical Drawing

The 5G-ANTM-SMA-D mechanical properties are shown in the following:

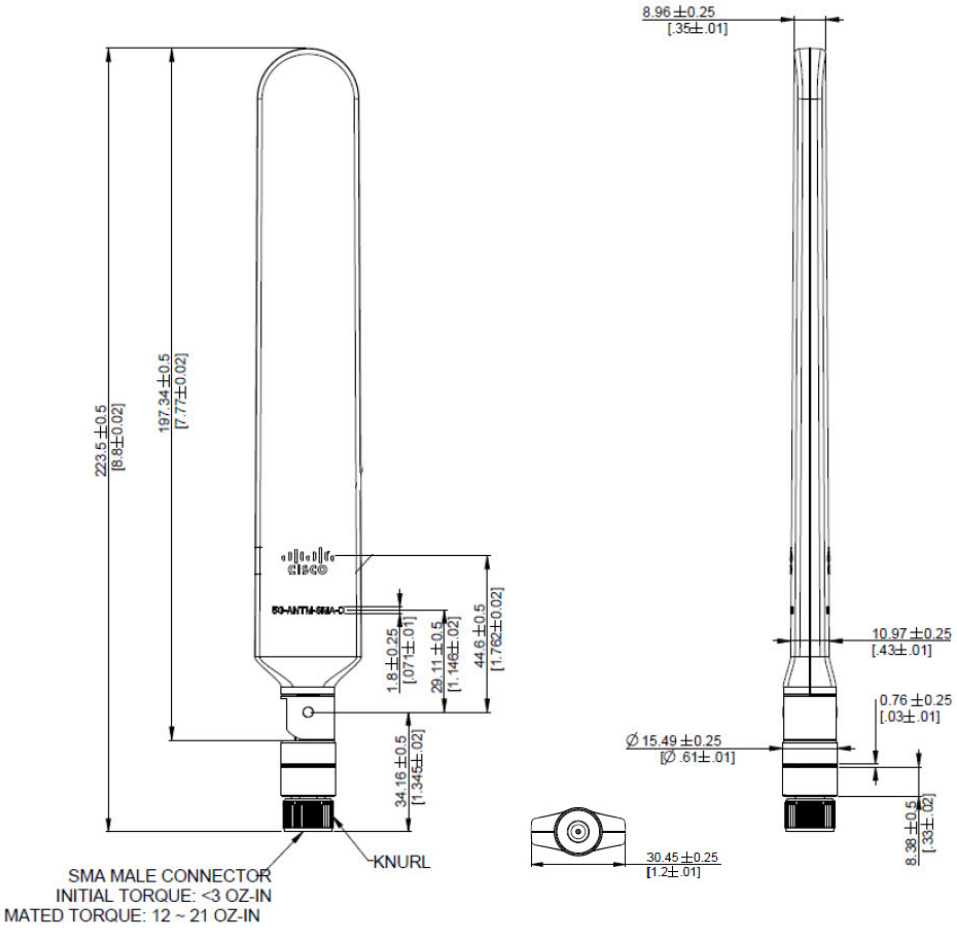

Installation Notes

The 5G-ANTM-SMA-D is intended for indoor use. Extension cables, bases and other accessories are sold separately. The antenna is designed to connect to a dedicated antenna port on the device. No special tools are required to install the antenna.

General Safety Precautions

Warning This warning symbol means danger. You are in a situation that could cause bodily injury. Before you work on any equipment, be aware of the hazards involved with electrical circuitry and be familiar with standard practices for preventing accidents. Use the statement number provided at the end of each warning to locate its translation in the translated safety warnings that accompanied this device. **Statement 1071**

Warning Do not work on the system or connect or disconnect cables during periods of lightning activity. **Statement 1001**

Warning Do not locate the outdoor antenna near overhead power lines or other electric light or power circuits, or where it can come into contact with such circuits. When installing the antenna, take extreme care not to come into contact with such circuits, as they may cause serious injury or death. For proper installation and grounding of the antenna, please refer to national and local codes (for example, U.S.:NFPA 70, National Electrical Code, Article 810, Canada:Canadian Electrical Code, Section 54). **Statement 1052**

Warning In order to comply with FCC radio frequency (RF) exposure limits, antennas should be located at a minimum of 7.9 inches (20 cm) or more from the body of all persons. **Statement 332**

Note For your safety, and to help you achieve a good installation, please read and follow these safety precautions.

Mast Mounted or Building Mounted Installations

The following instructions are common to most mast mounted or building mounted installations. For specific installation instructions for each antenna, see the antenna data-sheet and the router hardware installation guide.

- Find someone to help you—installing an antenna is often a two-person job.
- Select your installation site with safety, as well as performance, in mind. Remember that electric power lines and phone lines look alike. For your safety, assume that any overhead line can kill you.
- Contact your electric power company. Tell them your plans and ask them to come look at your proposed installation.
- Do not use a metal ladder.
- Do not work on a wet or windy day.
- Do dress properly—wear shoes with rubber soles and heels, rubber gloves, and a long-sleeved shirt or jacket.
- If the assembly starts to drop, move away from it and let it fall. Because the antenna, mast, cable, and metal guy wires are all excellent conductors of electrical current, even the slightest touch of any of these parts to a power line completes an electrical path through the antenna and the installer.
- If any part of the antenna system should come in contact with a power line, do not touch it or try to remove it yourself. Call your local power company to have it removed safely.
- If an accident should occur with the power lines, call for qualified emergency help immediately.
- Assemble your new antenna on the ground or a level surface at the installation site.
- Connect its coaxial cable while you are on the ground and attach the antenna to the mast.

- Ensure that the mast does not fall as you raise or remove it. Use a durable non-conductive rope secured at each two foot level as the mast is raised. Have an assistant tend the rope, ready to pull the mast clear of any hazards (such as power lines) should it begin to fall.
- Use the mounting bracket provided with the antenna.
- If the installation will use guy wires:
  - Install guy anchor bolts.
  - Estimate the length of guy wire and cut it before raising the mast.
  - Attach guy wires to a mast using guy rings.
  - In the case of a guyed (tall, thin mast) installation, you must have at least one assistant to hold the mast upright while the guy wires are attached and tightened to the anchor bolts.
- Attach a “DANGER” label at eye level on the mast.
- Install ground rods to remove any static electricity buildup and connect a ground wire to the mast and ground rod. Use ground rods designed for that purpose, not a spare piece of pipe.

Unused Antenna Ports

Port plugs must be installed in any unused antenna ports.

The weatherproof caps on the connectors protect the router interior from environmental elements including water, heat, cold, and dust. They are installed on unused ports before the router is shipped.

When you install a new antenna in a port with an N-connector:

- Chassis-mounted antennas—Remove the weather proof cap before installing a chassis-mounted antenna.
- External antennas—Remove weatherproof cap, then connect the supported Cisco cable to the connector.

Guidelines to Achieving Optimal RF and Antenna Performance

Antennas are a critical component of a wireless communication system. Selecting a suitable antenna, an optimal antenna location, or antenna site is essential for optimum performance of a wireless links.

This section covers general tips for optimizing RF performance of indoor and outdoor terrestrial radio systems in the 400-7125 MHz frequency range. Examples of terrestrial radio systems include 4G LTE, 5G NR, Wi-Fi, LoRa, LR-WPAN and similar. In this context GPS SPS would not be considered a terrestrial system as the signal is received from space, not from another terrestrial site.

Because the antenna transmits and receives radio signals over the air, overall RF performance of the link is susceptible to RF obstructions and common sources of RF interference that can reduce throughput and range of the system.

Follow these guidelines to optimize performance. When in doubt, consult a qualified RF professional, and check with your solution partner for specific recommendations.

Antenna Model Selection and Performance

Consider the following when planning your installation:

- When selecting the antenna, ensure that it covers the frequency ranges or frequency bands of interest, and that it has good RF parameters such as antenna efficiency, VSWR and suitable radiation pattern for every frequency range that your application will use with this antenna.
- Antenna pattern is important. Omni-directional antennas have lower gain, but allow communicating to devices in all azimuth directions. Directional antennas concentrate the beam in a specific direction, making them ideal for point to point communication.
- When a system has multiple RF ports for receive and / or transmit, as is the case for 4G LTE , 5G NR or Wi-Fi, it is highly recommended to populate all the RF ports with suitable antennas to take advantage of MIMO, rather than rely on a single port or single antenna to save on cost. Please see the MIMO section for a detailed description of MIMO benefits.
- For RF systems that support multiple RF ports and multiple RF standards such as LTE, Wi-Fi, and GPS: consider using a multi-element antenna that integrates multiple antennas under the same radome (cover). Doing so may reduce cost compared to deploying and mounting a discrete single port antenna for every RF port.
- For communication between fixed infrastructure devices, such as mesh nodes or a point-to-point backhaul link, each device should have an antenna with the same polarization. If communicating with mobile devices that might be randomly oriented, consider dual-polarized antennas, such as those with both vertical and horizontal or slant +45° and -45° polarized elements.

Antenna Environmental Specifications

The selected antenna must have suitable mechanical and environmental specifications for the environment where it will be deployed. For example, shock and vibration specifications for transportation, corrosion resistant construction for marine and oil and gas industries, or IP (ingress protection) rating for outdoor deployment. Indoor antennas are typically not suitable for harsh industrial environments. Please check with your system integrator for environmental requirements for your application.

Antenna Accessories and Mounting

Consider the following when planning your installation:

- Carefully consider what type of other RF accessories, besides antenna, such as RF cables, lightning arrestors or RF adapters may be required in your installations. It is best to minimize long RF cable runs due to RF signal losses in the cable. Thinner RF cables have more RF loss , thicker cables are less flexible and more expensive.
- Carefully consider how the antenna will be physically mounted, as this may affect antenna selection. For example, a stud mount mechanical mounting design is a better fit for mounting on top of an electrical cabinet than a mast mount antenna.
- For outdoor deployments, follow installation instructions for the antenna. It is good practice to keep protective covers on the radio’s RF ports and any antenna or accessory RF ports until the moment the interfaces are mated. This reduces chances of contamination, trapping water or condensation inside the connector, or accidental damage to RF interfaces.

MIMO Performance and Arrays

MIMO systems deliver benefits of higher SNR, higher reliability and higher throughput compared to single antenna systems. In more technical terms, MIMO delivers array gain, diversity gain and multiplexing gain compared to single antenna.

- Array gain — Improvement in SNR (signal to noise ratio) by coherently combining signals from multiple antennas. For example, increasing SNR through beamforming techniques.
- Diversity gain — Improvement in reliability by mitigating deep fading or strong destructive EM wave interference. For example, in a two-antenna system, if one antenna is experiencing deep fading due to an EM destructive null at its location at a given instant, the other antenna is unlikely to have a null at the same instant, and the combined SNR stays at a reliable level. In contrast, a single antenna would see SNR oscillating between good SNR and very poor SNR and reliability would degrade.
- Multiplexing gain — Increase in system capacity or throughput by sending independent data over multiple spatial streams simultaneously. The number of streams cannot be more than the number of antennas. For example, to support three spatial streams, a minimum of three antennas is required. Often there may be additional antennas for diversity or redundancy, such as in the case of 4x4:3, or 4x4 MIMO with 3 spatial streams.

If deploying multiple single-element antennas for a MIMO system in an array, ensure sufficient spacing between the antennas. Omnidirectional elements should generally be at least one wavelength apart at the lowest operating frequency.

Consider the following:

- For Wi-Fi systems operating in the 2.4, 5, and/or 6 GHz bands, space elements at least 5 inches (12.5 cm) apart.
- For 4G LTE and 5G systems with the lowest operating frequency of 617 MHz , space elements at least 20 inches (50 cm) apart.
- Note that spacing between elements inside multi-element MIMO antennas is often less than one wavelength. However multi-element antennas are engineered with MIMO performance in mind, by providing antenna diversity through pattern, polarization, and isolation between MIMO elements.

Antenna siting and location

Consider the following when planning your installation:

- Plan antenna location ahead of time. Ideal location for an antenna is in LOS (line of sight) of the counterpart that it is trying to communicate with. Under LOS conditions the signals propagate directly between the two communication nodes, without relying on signal bouncing off a wall or other structure to reach the counterpart. This is sometimes not possible to achieve in practice, but it is a useful goal to keep in mind when optimizing antenna location.
- While it is good to keep RF cables short, it is most desirable for an antenna to be in the best location it can be to provide the desired coverage.
- For large deployments involving multiple units communicating with each other across a complex urban or industrial landscape, consider running an RF propagation modeling study to predict approximate simulated coverage maps and determine initial placement of the units. A propagation study may help reduce overall deployment cost by discovering and mitigating issues with RF coverage before the infrastructure is physically installed.
- Keep the antenna away from metal obstructions such as heating and air-conditioning ducts, large ceiling trusses, building superstructures, and major power cabling runs. One exception is if the antenna is designed to be mounted on a ground plane. If mounting on a ground plane, mount the antenna on a flat metal surface away from adjacent obstructions.

- It is strongly recommended not to install antennas directly on the router or access point (AP), unless the router or AP is specifically engineered to directly mount the antennas. Products that are engineered for direct mounting of antennas specifically address each of the below issues.
- Reasons to mount antennas away from the router include:
  - Router location may not be optimal location for antenna to communicate with the counterpart wirelessly, so router and antenna may need to be in different locations.
  - Router may have a clutter of Ethernet cable and power cables around it, which will obstruct antenna signal.
  - A number of routers, such as the IR1835, are modular. They have plug-in RF modules for Wi-Fi , 4G LTE or 5G NR such as WP-WIFI6, P-LTEAP18-GL, P-5GS6-GL. These modules have RF connectors spaced close together, and while it is mechanically possible to install four or five antennas directly attached, this will result in significant degradation to RF performance of antennas due to mutual de-tuning between closely spaced antennas. It is strongly recommended to install antennas away from the chassis in modular cases.
- If installing an antenna indoors, consider that the density and electromagnetic properties of the materials used in the building construction determines the number of walls the signal can pass through and still maintain adequate coverage.
  - Paper and vinyl walls have very little effect on signal penetration.
  - Solid and pre-cast concrete walls limit signal penetration to one or two walls without degrading coverage.
  - Concrete and wood block walls limit signal penetration to three or four walls.
  - A signal can penetrate five or six walls constructed of drywall or wood.
  - A thick metal wall causes signals to reflect off, causing poor penetration.
  - A chain link fence or wire mesh spaced between 1 and 1 1/2 in. (2.5 and 3.8 cm) acts as a harmonic reflector that blocks a 2.4-GHz radio signal.
  - Install the antenna away from microwave ovens and 2-GHz cordless phones. These products can cause signal interference because they operate in the same frequency range as the device your antenna is connected to.

Mounting the Antenna

To connect the antenna to the device, follow these steps:

1. If necessary, remove the antenna port cover.
2. Align the antenna's connector with the appropriate antenna port.
3. Gently push the antenna into the port.
4. Hand-tighten the antenna.
5. Refer to the torque values listed in the Technical Specifications.

Tools and Equipment Required

No tools are required to mount the antenna to the device. However, you may need a ¾-in. (19-mm) open end or combination wrench (or adjustable wrench) to remove the antenna port covers.

For information about tools required to mount the access point, see the appropriate device documentation.

Choosing a Mounting Location

The antenna is designed to create an omnidirectional broadcast pattern. To achieve this pattern, the access point should be mounted clear of any obstructions to the sides of the radiating element. If the mounting location is on the side of a building or tower, the antenna pattern is degraded on the building or tower side.

Generally, the higher an antenna is above the ground, the better it performs. A best practice is to install your antenna about 5 to 10 feet (1.5 to 3 m) above the roof line, and away from all power lines and obstructions.

Communications, Services, and Additional Information

- To receive timely, relevant information from Cisco, sign up at Cisco Profile Manager.
- To get the business impact you're looking for with the technologies that matter, visit Cisco Services.
- To submit a service request, visit Cisco Support.
- To discover and browse secure, validated enterprise-class apps, products, solutions, and services, visit Cisco DevNet.
- To obtain general networking, training, and certification titles, visit Cisco Press.
- To find warranty information for a specific product or product family, access Cisco Warranty Finder.

Cisco Bug Search Tool

Cisco Bug Search Tool (BST) is a web-based tool that acts as a gateway to the Cisco bug tracking system that maintains a comprehensive list of defects and vulnerabilities in Cisco products and software. BST provides you with detailed defect information about your products and software.

Documentation Feedback

To provide feedback about Cisco technical documentation, use the feedback form available in the right pane of every online document.

Cisco Support Community

Cisco Support Community is a forum for you to ask and answer questions, share suggestions, and collaborate with your peers. Join the forum at https://supportforums.cisco.com/index.jspa.

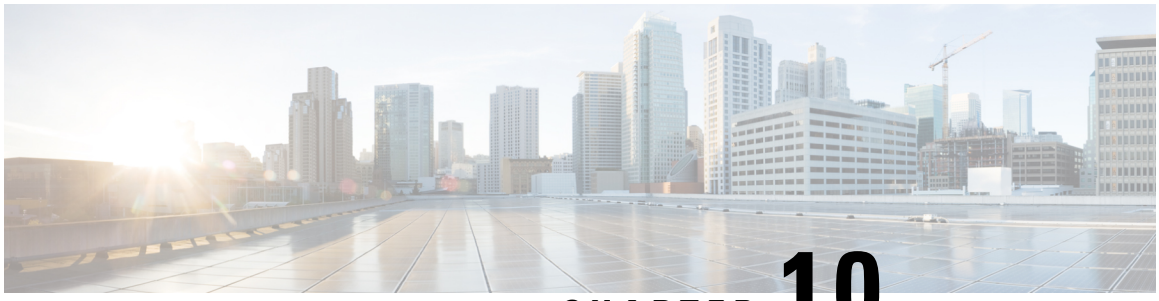

CHAPTER 10

Cisco Aironet 2.4 GHz 13-dBi Directional Antenna (AIR-ANT2413P2M-N)

This chapter contains the following:

- Overview, on page 181
- Technical Specifications, on page 182
- System Requirements, on page 183
- General Safety Precautions, on page 183
- Guidelines to Achieving Optimal RF and Antenna Performance, on page 185
- Installing the Antenna, on page 188
- Tools and Equipment Required, on page 188
- Mounting on a Pole, on page 189
- Installing the Optional Mounting Bracket Kit, on page 194
- Mounting on a Vertical Surface, on page 194
- Antenna Cable Information, on page 200
- Grounding the Antenna, on page 201
- Communications, Services, and Additional Information, on page 201

Overview

This document outlines the specifications for the Cisco Aironet AIR-ANT2413P2M-N 2.4 GHz 13-dBi 2-Port Directional antenna with N-type connectors and provides instructions for mounting it. The antenna operates in the 2.4 GHz frequency band and is designed for use in outdoor environments.

Figure 73: AIR-ANT2413P2M-N

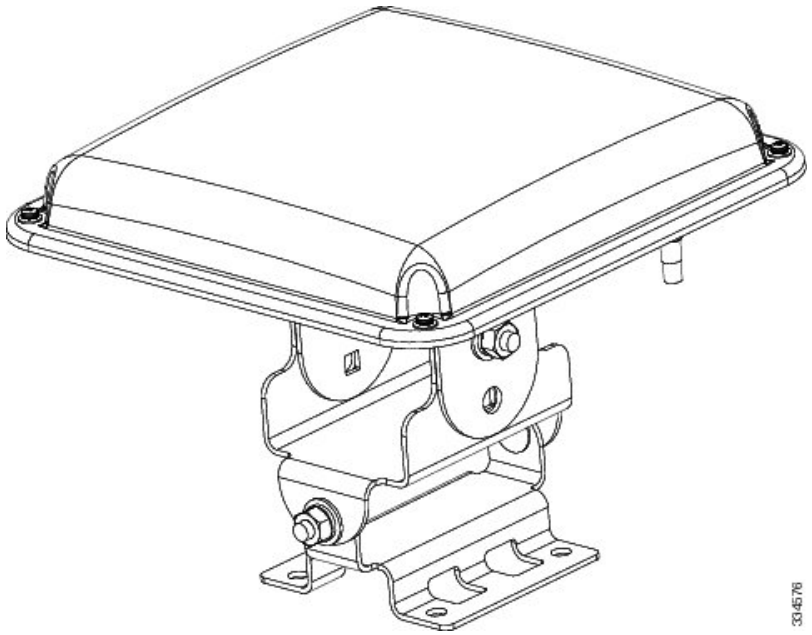

Technical Specifications

Antenna type	**2-Element Patch Array**
Operating frequency range	2400 to 2500 MHz
Nominal input impedance	50 Ohms
Peak gain	13 dBi
Polarization	Linear, Dual
Elevation plane 3-dB beamwidth	30°
Azimuth plane 3-dB beamwidth	30°
Sidelobe level	< –20 dBc
Front-to-back ratio	> 25 dB
Cable length and type	30 in. (76.2 cm)outdoor rated Coax
Connector type	N Male
Length	7.8 in. (19.8 cm)
Width	7.8 in. (19.8 cm)
Height	1.2 in. (3 cm)

Antenna type	2-Element Patch Array
Weight	21.6 oz. (0.61 kg)
Operating temperature range	–40°F to 131°F (–40°C to 55°C)

Elevation and Azimuth Plane Patterns

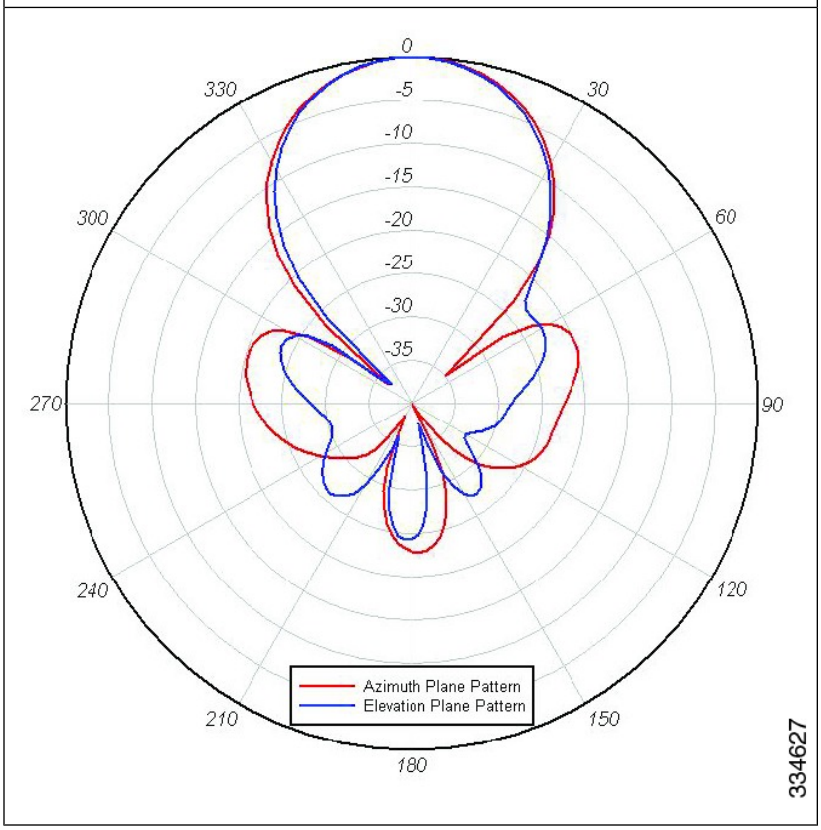

System Requirements

This antenna is designed for use with Cisco Aironet access points and bridges but can be used with any 2.4-GHz Cisco Aironet radio device that uses an N-male connector.

General Safety Precautions

Warning This warning symbol means danger. You are in a situation that could cause bodily injury. Before you work on any equipment, be aware of the hazards involved with electrical circuitry and be familiar with standard practices for preventing accidents. Use the statement number provided at the end of each warning to locate its translation in the translated safety warnings that accompanied this device. **Statement 1071**

Warning Do not work on the system or connect or disconnect cables during periods of lightning activity. **Statement 1001**

Warning Do not locate the outdoor antenna near overhead power lines or other electric light or power circuits, or where it can come into contact with such circuits. When installing the antenna, take extreme care not to come into contact with such circuits, as they may cause serious injury or death. For proper installation and grounding of the antenna, please refer to national and local codes (for example, U.S.:NFPA 70, National Electrical Code, Article 810, Canada:Canadian Electrical Code, Section 54). **Statement 1052**

Warning In order to comply with FCC radio frequency (RF) exposure limits, antennas should be located at a minimum of 7.9 inches (20 cm) or more from the body of all persons. **Statement 332**

Note For your safety, and to help you achieve a good installation, please read and follow these safety precautions.

Mast Mounted or Building Mounted Installations

The following instructions are common to most mast mounted or building mounted installations. For specific installation instructions for each antenna, see the antenna data-sheet and the router hardware installation guide.

- Find someone to help you—installing an antenna is often a two-person job.
- Select your installation site with safety, as well as performance, in mind. Remember that electric power lines and phone lines look alike. For your safety, assume that any overhead line can kill you.
- Contact your electric power company. Tell them your plans and ask them to come look at your proposed installation.
- Do not use a metal ladder.
- Do not work on a wet or windy day.
- Do dress properly—wear shoes with rubber soles and heels, rubber gloves, and a long-sleeved shirt or jacket.
- If the assembly starts to drop, move away from it and let it fall. Because the antenna, mast, cable, and metal guy wires are all excellent conductors of electrical current, even the slightest touch of any of these parts to a power line completes an electrical path through the antenna and the installer.
- If any part of the antenna system should come in contact with a power line, do not touch it or try to remove it yourself. Call your local power company to have it removed safely.
- If an accident should occur with the power lines, call for qualified emergency help immediately.
- Assemble your new antenna on the ground or a level surface at the installation site.
- Connect its coaxial cable while you are on the ground and attach the antenna to the mast.

- Ensure that the mast does not fall as you raise or remove it. Use a durable non-conductive rope secured at each two foot level as the mast is raised. Have an assistant tend the rope, ready to pull the mast clear of any hazards (such as power lines) should it begin to fall.
- Use the mounting bracket provided with the antenna.
- If the installation will use guy wires:
  - Install guy anchor bolts.
  - Estimate the length of guy wire and cut it before raising the mast.
  - Attach guy wires to a mast using guy rings.
  - In the case of a guyed (tall, thin mast) installation, you must have at least one assistant to hold the mast upright while the guy wires are attached and tightened to the anchor bolts.
- Attach a “DANGER” label at eye level on the mast.
- Install ground rods to remove any static electricity buildup and connect a ground wire to the mast and ground rod. Use ground rods designed for that purpose, not a spare piece of pipe.

Unused Antenna Ports

Port plugs must be installed in any unused antenna ports.

The weatherproof caps on the connectors protect the router interior from environmental elements including water, heat, cold, and dust. They are installed on unused ports before the router is shipped.

When you install a new antenna in a port with an N-connector:

- Chassis-mounted antennas—Remove the weather proof cap before installing a chassis-mounted antenna.
- External antennas—Remove weatherproof cap, then connect the supported Cisco cable to the connector.

Guidelines to Achieving Optimal RF and Antenna Performance

Antennas are a critical component of a wireless communication system. Selecting a suitable antenna, an optimal antenna location, or antenna site is essential for optimum performance of a wireless links.

This section covers general tips for optimizing RF performance of indoor and outdoor terrestrial radio systems in the 400-7125 MHz frequency range. Examples of terrestrial radio systems include 4G LTE, 5G NR, Wi-Fi, LoRa, LR-WPAN and similar. In this context GPS SPS would not be considered a terrestrial system as the signal is received from space, not from another terrestrial site.

Because the antenna transmits and receives radio signals over the air, overall RF performance of the link is susceptible to RF obstructions and common sources of RF interference that can reduce throughput and range of the system.

Follow these guidelines to optimize performance. When in doubt, consult a qualified RF professional, and check with your solution partner for specific recommendations.

Antenna Model Selection and Performance

Consider the following when planning your installation:

- When selecting the antenna, ensure that it covers the frequency ranges or frequency bands of interest, and that it has good RF parameters such as antenna efficiency, VSWR and suitable radiation pattern for every frequency range that your application will use with this antenna.
- Antenna pattern is important. Omni-directional antennas have lower gain, but allow communicating to devices in all azimuth directions. Directional antennas concentrate the beam in a specific direction, making them ideal for point to point communication.
- When a system has multiple RF ports for receive and / or transmit, as is the case for 4G LTE , 5G NR or Wi-Fi, it is highly recommended to populate all the RF ports with suitable antennas to take advantage of MIMO, rather than rely on a single port or single antenna to save on cost. Please see the MIMO section for a detailed description of MIMO benefits.
- For RF systems that support multiple RF ports and multiple RF standards such as LTE, Wi-Fi, and GPS: consider using a multi-element antenna that integrates multiple antennas under the same radome (cover). Doing so may reduce cost compared to deploying and mounting a discrete single port antenna for every RF port.
- For communication between fixed infrastructure devices, such as mesh nodes or a point-to-point backhaul link, each device should have an antenna with the same polarization. If communicating with mobile devices that might be randomly oriented, consider dual-polarized antennas, such as those with both vertical and horizontal or slant +45° and -45° polarized elements.

Antenna Environmental Specifications

The selected antenna must have suitable mechanical and environmental specifications for the environment where it will be deployed. For example, shock and vibration specifications for transportation, corrosion resistant construction for marine and oil and gas industries, or IP (ingress protection) rating for outdoor deployment. Indoor antennas are typically not suitable for harsh industrial environments. Please check with your system integrator for environmental requirements for your application.

Antenna Accessories and Mounting

Consider the following when planning your installation:

- Carefully consider what type of other RF accessories, besides antenna, such as RF cables, lightning arrestors or RF adapters may be required in your installations. It is best to minimize long RF cable runs due to RF signal losses in the cable. Thinner RF cables have more RF loss , thicker cables are less flexible and more expensive.
- Carefully consider how the antenna will be physically mounted, as this may affect antenna selection. For example, a stud mount mechanical mounting design is a better fit for mounting on top of an electrical cabinet than a mast mount antenna.
- For outdoor deployments, follow installation instructions for the antenna. It is good practice to keep protective covers on the radio's RF ports and any antenna or accessory RF ports until the moment the interfaces are mated. This reduces chances of contamination, trapping water or condensation inside the connector, or accidental damage to RF interfaces.

MIMO Performance and Arrays

MIMO systems deliver benefits of higher SNR, higher reliability and higher throughput compared to single antenna systems. In more technical terms, MIMO delivers array gain, diversity gain and multiplexing gain compared to single antenna.

- Array gain — Improvement in SNR (signal to noise ratio) by coherently combining signals from multiple antennas. For example, increasing SNR through beamforming techniques.
- Diversity gain — Improvement in reliability by mitigating deep fading or strong destructive EM wave interference. For example, in a two-antenna system, if one antenna is experiencing deep fading due to an EM destructive null at its location at a given instant, the other antenna is unlikely to have a null at the same instant, and the combined SNR stays at a reliable level. In contrast, a single antenna would see SNR oscillating between good SNR and very poor SNR and reliability would degrade.
- Multiplexing gain — Increase in system capacity or throughput by sending independent data over multiple spatial streams simultaneously. The number of streams cannot be more than the number of antennas. For example, to support three spatial streams, a minimum of three antennas is required. Often there may be additional antennas for diversity or redundancy, such as in the case of 4x4:3, or 4x4 MIMO with 3 spatial streams.

If deploying multiple single-element antennas for a MIMO system in an array, ensure sufficient spacing between the antennas. Omnidirectional elements should generally be at least one wavelength apart at the lowest operating frequency.

Consider the following:

- For Wi-Fi systems operating in the 2.4, 5, and/or 6 GHz bands, space elements at least 5 inches (12.5 cm) apart.
- For 4G LTE and 5G systems with the lowest operating frequency of 617 MHz , space elements at least 20 inches (50 cm) apart.
- Note that spacing between elements inside multi-element MIMO antennas is often less than one wavelength. However multi-element antennas are engineered with MIMO performance in mind, by providing antenna diversity through pattern, polarization, and isolation between MIMO elements.

Antenna siting and location

Consider the following when planning your installation:

- Plan antenna location ahead of time. Ideal location for an antenna is in LOS (line of sight) of the counterpart that it is trying to communicate with. Under LOS conditions the signals propagate directly between the two communication nodes, without relying on signal bouncing off a wall or other structure to reach the counterpart. This is sometimes not possible to achieve in practice, but it is a useful goal to keep in mind when optimizing antenna location.
- While it is good to keep RF cables short, it is most desirable for an antenna to be in the best location it can be to provide the desired coverage.
- For large deployments involving multiple units communicating with each other across a complex urban or industrial landscape, consider running an RF propagation modeling study to predict approximate simulated coverage maps and determine initial placement of the units. A propagation study may help reduce overall deployment cost by discovering and mitigating issues with RF coverage before the infrastructure is physically installed.
- Keep the antenna away from metal obstructions such as heating and air-conditioning ducts, large ceiling trusses, building superstructures, and major power cabling runs. One exception is if the antenna is designed to be mounted on a ground plane. If mounting on a ground plane, mount the antenna on a flat metal surface away from adjacent obstructions.

- It is strongly recommended not to install antennas directly on the router or access point (AP), unless the router or AP is specifically engineered to directly mount the antennas. Products that are engineered for direct mounting of antennas specifically address each of the below issues.
- Reasons to mount antennas away from the router include:
  - Router location may not be optimal location for antenna to communicate with the counterpart wirelessly, so router and antenna may need to be in different locations.
  - Router may have a clutter of Ethernet cable and power cables around it, which will obstruct antenna signal.
  - A number of routers, such as the IR1835, are modular. They have plug-in RF modules for Wi-Fi , 4G LTE or 5G NR such as WP-WIFI6, P-LTEAP18-GL, P-5GS6-GL. These modules have RF connectors spaced close together, and while it is mechanically possible to install four or five antennas directly attached, this will result in significant degradation to RF performance of antennas due to mutual de-tuning between closely spaced antennas. It is strongly recommended to install antennas away from the chassis in modular cases.
- If installing an antenna indoors, consider that the density and electromagnetic properties of the materials used in the building construction determines the number of walls the signal can pass through and still maintain adequate coverage.
  - Paper and vinyl walls have very little effect on signal penetration.
  - Solid and pre-cast concrete walls limit signal penetration to one or two walls without degrading coverage.
  - Concrete and wood block walls limit signal penetration to three or four walls.
  - A signal can penetrate five or six walls constructed of drywall or wood.
  - A thick metal wall causes signals to reflect off, causing poor penetration.
  - A chain link fence or wire mesh spaced between 1 and 1 1/2 in. (2.5 and 3.8 cm) acts as a harmonic reflector that blocks a 2.4-GHz radio signal.
  - Install the antenna away from microwave ovens and 2-GHz cordless phones. These products can cause signal interference because they operate in the same frequency range as the device your antenna is connected to.

Installing the Antenna

You can install the antenna on a pole from 1.63” to 2.3” pipe O.D. The mounting options allow the antenna to be vertically or horizontally polarized.

Tools and Equipment Required

An installation kit is shipped with the antenna and consists of the panel antenna with adjustable mount and hardware, including:

- Antenna mount bracket

- Elevation adjustable bracket
- Azimuth adjustable bracket
- Four 1/4-in. 20x3/4 carriage bolts
- Six 1/4-in. 20 hex nuts
- Six 1/4-in. 20 spring lock washers
- Six 1/4-in. 20 flat washers
- Two pipe clamps

To attach the mount to the antenna and secure it to the pole, you need the following tools and equipment, which are not provided.

- 7/16-in wrench
- 5/16-in nut driver or flat head screwdriver for pipe clamps

The following sections contain typical procedures for installing the antenna on a pole. Your installation may vary.

Mounting on a Pole

Follow these steps to mount your antenna on a pole.

Step 1 Remove antenna and mount kit from packaging.

Step 2 Attach antenna mount bracket to the back of the antenna as shown applying a maximum nut-tightening torque of 55 in-lbf (6.2 Nm).

Figure 74: Attaching Antenna Mount Bracket

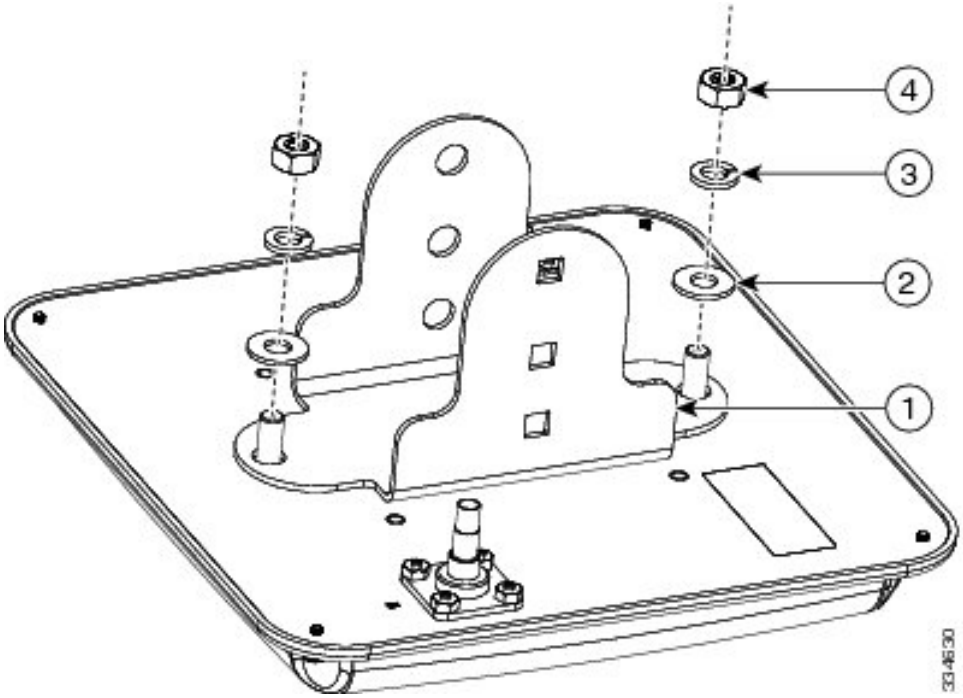

Item	Description
1	Antenna mount bracket
2	1/4-in. flat washer
3	1/4-in. spring lock washer
4	1/4-in. 20 hex nut

Step 3 Attach elevation adjustable bracket as shown and loosely secure hardware. The carriage bolt square holes must be on the inside.

Figure 75: Attaching Elevation Adjustable Bracket

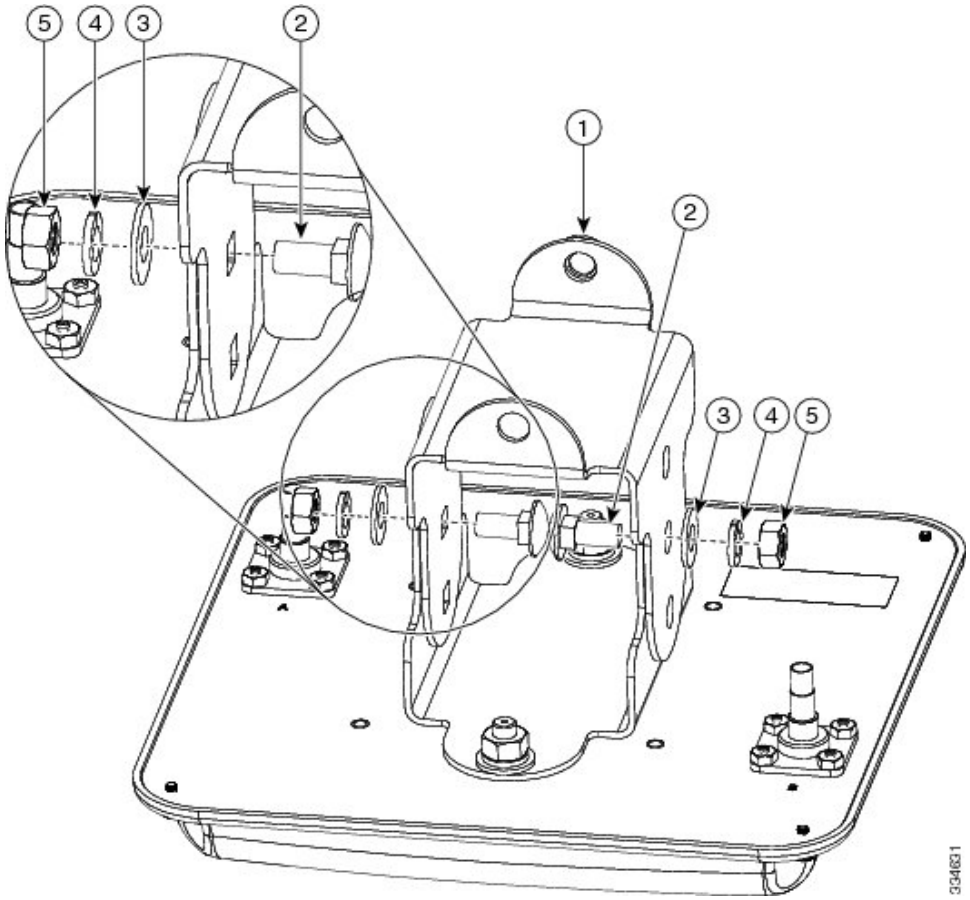

Item	Description
1	Elevation adjustable bracket
2	1/4-in. 20x3/4 carriage bolt
3	1/4-in. flat washer
4	1/4-in. spring lock washer
5	1/4-in. 20 hex nut

Step 4 Attach azimuth adjustable bracket to pipe routing band clamps as shown. Tighten the pipe clamps to a torque of 43-51 in-lbf (4.9-5.8 Nm).

Figure 76: Attaching Azimuth Adjustable Bracket

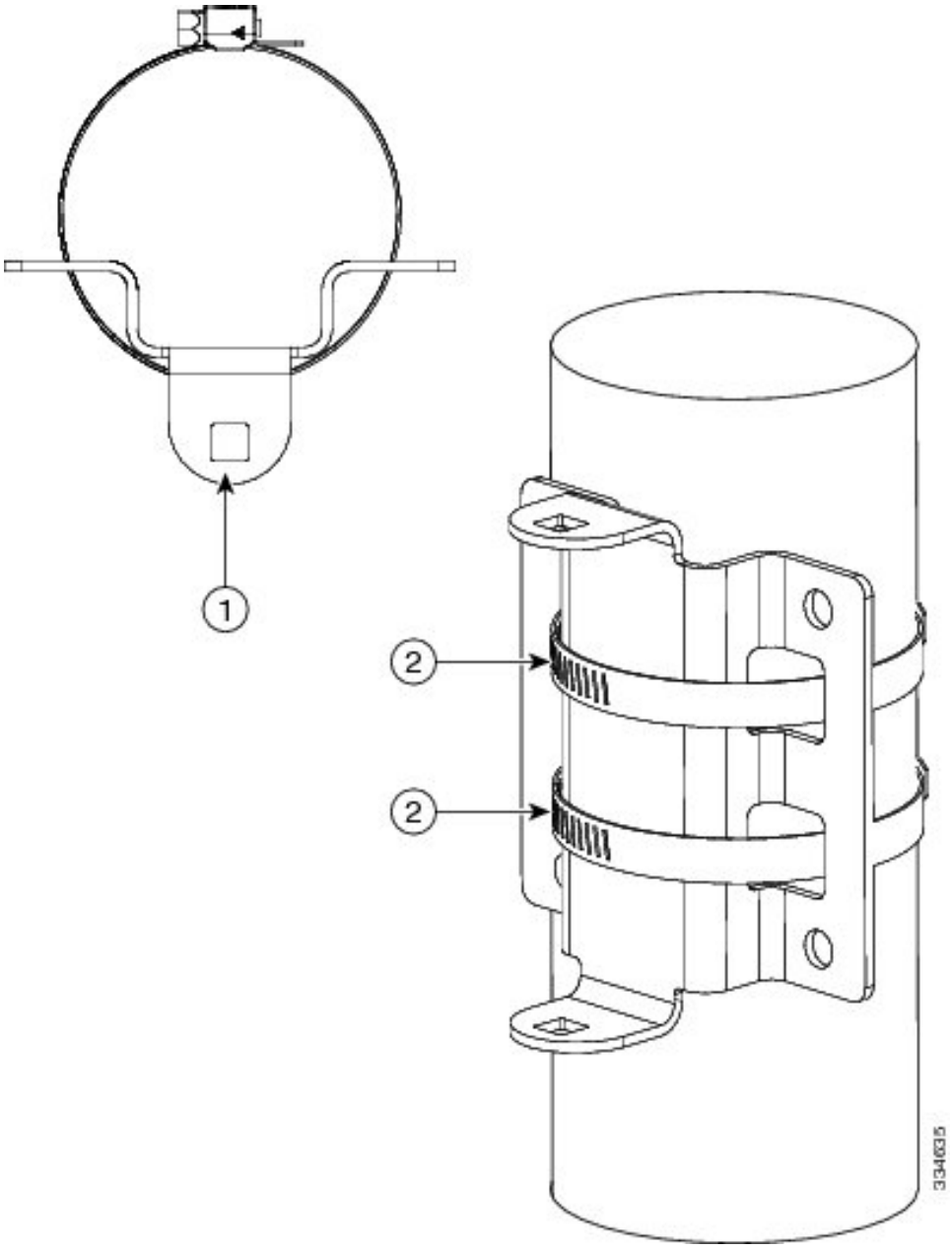

Item	Description
1	Azimuth adjustable bracket
2	Pipe clamps

Step 5 Attach antenna assembly to azimuth bracket on pipe.

Figure 77: Attaching Antenna Assembly

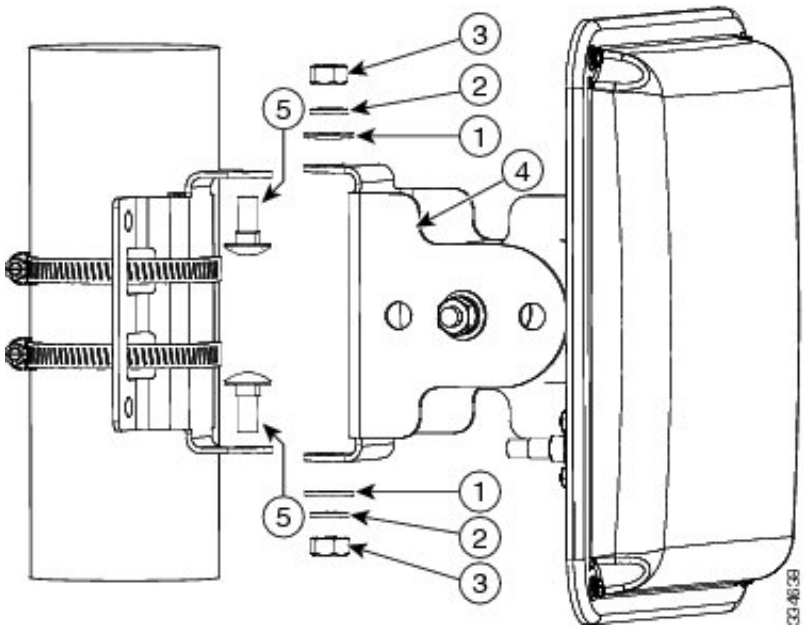

Item	Description
1	1/4-in. flat washer
2	1/4-in. spring lock washer
3	1/4-in. 20 hex nut
4	Elevation adjustable bracket
5	1/4-in. 20x3/4 carriage bolt

Step 6 Adjust the position of the antenna to the desired azimuth and elevation angles and tighten all pivot hardware (4 places) to a maximum torque of 55 in-lbf (6.2 Nm). The bracket allows the antenna position to be adjustable to +/–45 degrees azimuth and +/–60 degrees elevation.

Figure 78: Adjusting Antenna Position

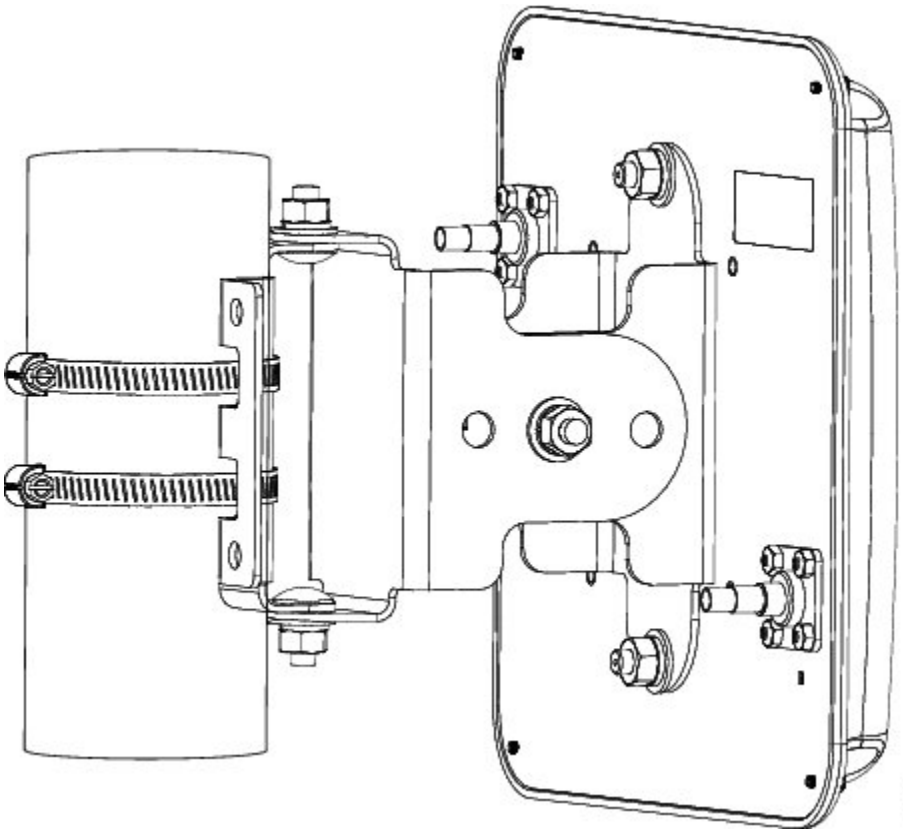

Note Cisco recommends grounding the antenna. Refer to that section within this chapter.

Installing the Optional Mounting Bracket Kit

Using an optional antenna mounting bracket kit, the AIR-ANT2413P2M-N antenna can be mounted directly on an access point in a strand mount or pole mount environment. The antenna bracket kit contains four bracket sections and fasteners that you can assemble in multiple configurations to position and aim the directional antenna in a range of positions. For more information on mounting the antenna with the optional mounting bracket, refer to Installing Directional-Antenna Mounting Kits on Cisco Outdoor Mesh Access Points.

Mounting on a Vertical Surface

Follow these steps to mount your antenna on a vertical surface.

Step 1 Remove antenna and mount kit from packaging.

Step 2 Attach antenna mount bracket to the back of the antenna as shown below, applying a maximum nut-tightening torque of 55 in-lbf (6.2 Nm).

Figure 79: Attaching Antenna Mount Bracket

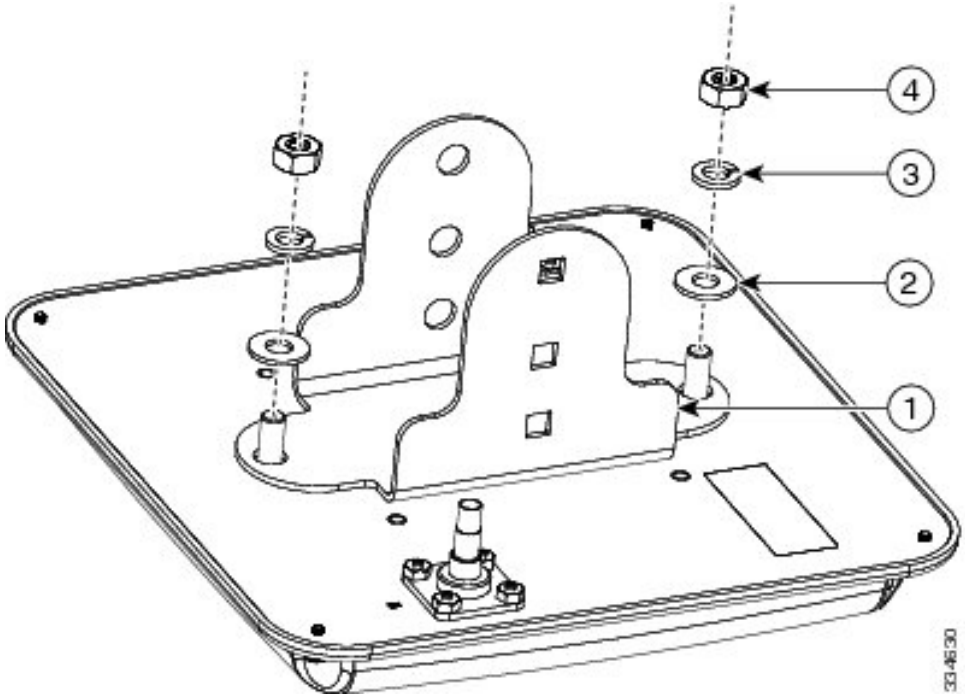

1	Antenna mount bracket
2	1/4-in. flat washer
3	1/4-in. spring lock washer
4	1/4-in. 20 hex nut

Step 3 Attach elevation adjustable bracket as shown and loosely secure hardware. The carriage bolt square holes must be on the inside.

Figure 80: Attaching Elevation Adjustable Bracket

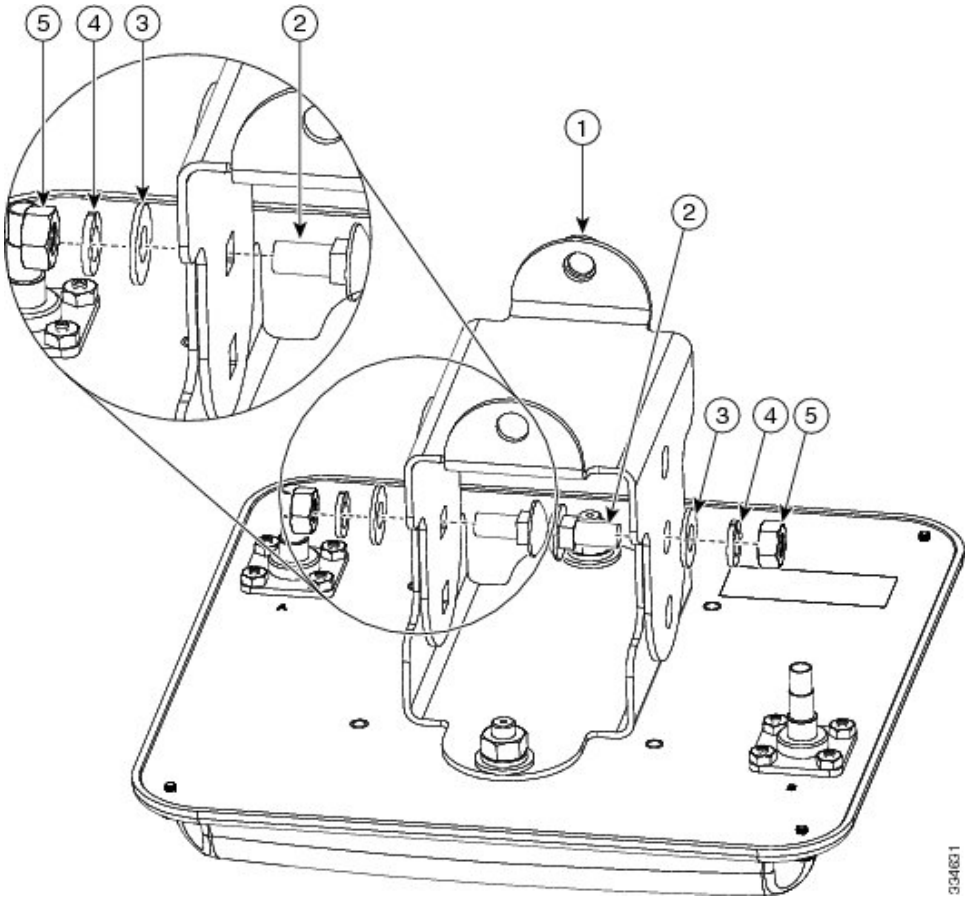

1	Elevation adjustable bracket
2	1/4-in. 20x3/4 carriage bolt
3	1/4-in. flat washer
4	1/4-in. spring lock washer
5	1/4-in. 20 hex nut

Step 4 Using the appropriate customer-supplied anchors and screws, attach the azimuth adjustable bracket to the wall as shown:

Figure 81: Wall Mounting

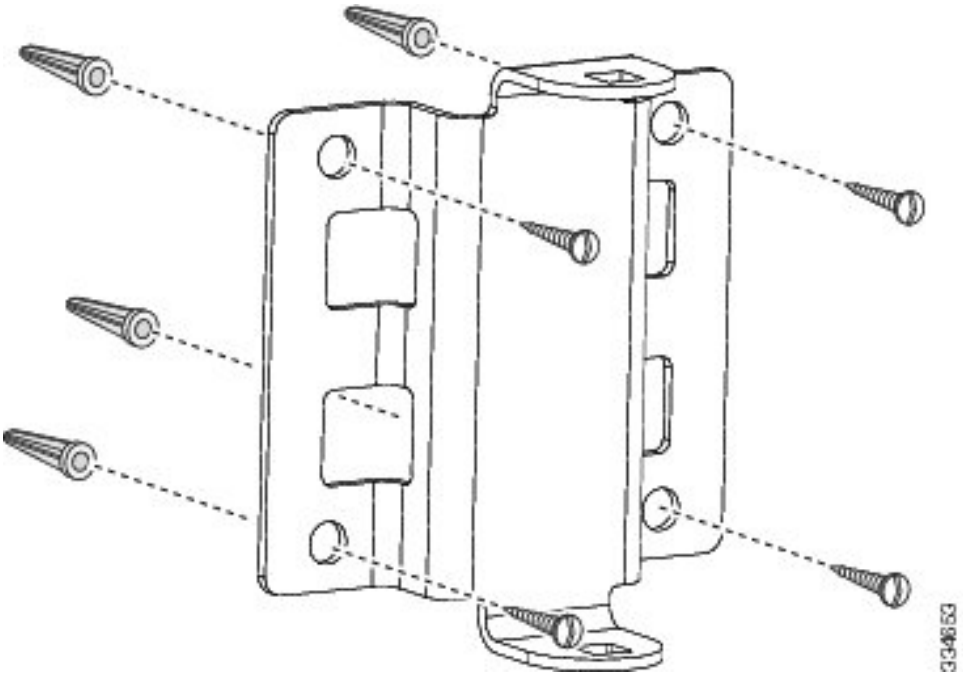

Figure 82: Distance Between Bracket Mounting Holes

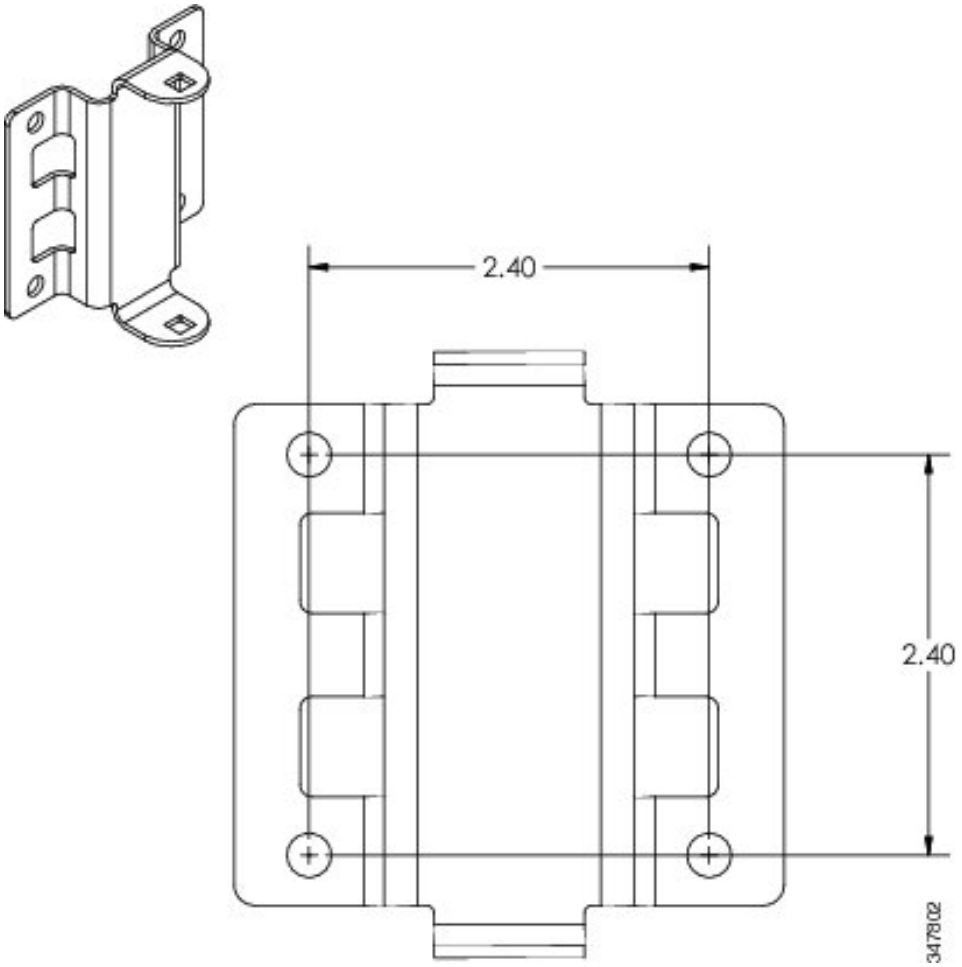

Step 5 Attach antenna assembly to azimuth bracket.

Figure 83: Attaching Antenna Assembly

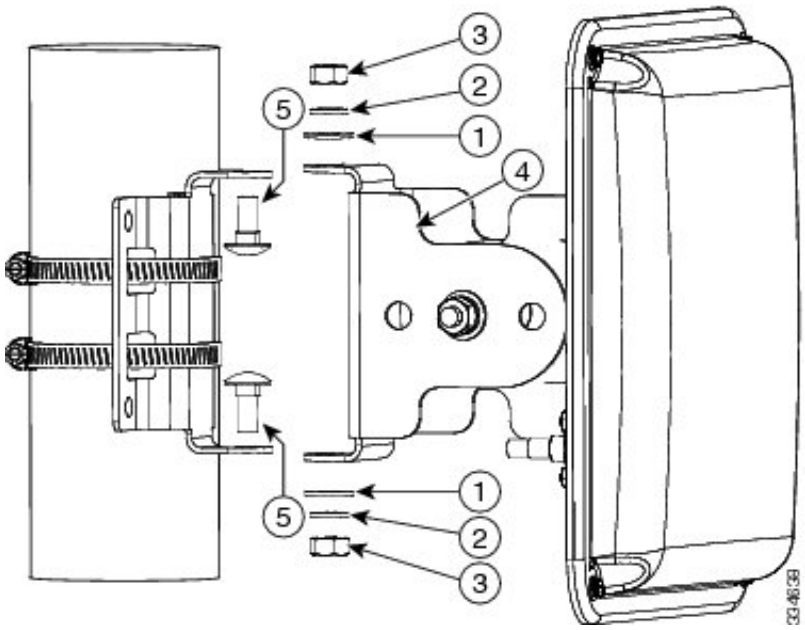

1	1/4-in. flat washer
2	1/4-in. spring lock washer
3	1/4-in. 20 hex nut
4	Elevation adjustable bracket
5	1/4-in. 20x3/4 carriage bolt

Step 6 Adjust the position of the antenna to the desired azimuth and elevation angles and tighten all pivot hardware (4 places) to a maximum torque of 55 in-lbf (6.2 Nm). The bracket allows the antenna position to be adjustable to +/–45 degrees azimuth and +/–60 degrees elevation.

Figure 84: Adjusting Antenna Position

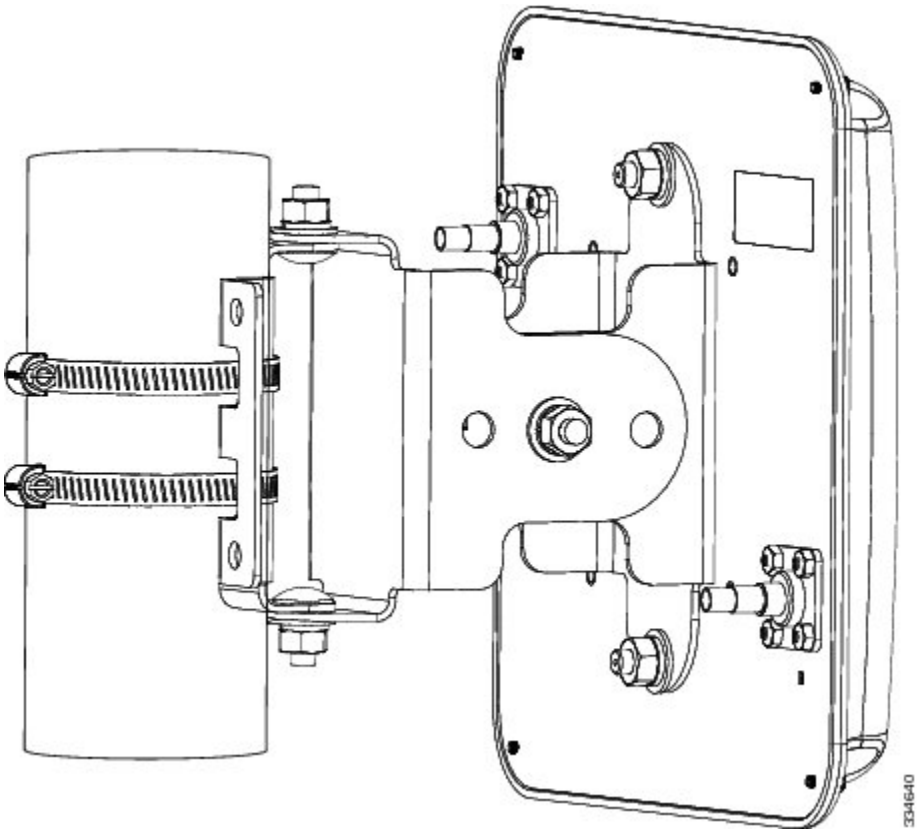

Note Cisco recommends grounding the antenna. Refer to that section within this chapter.

Antenna Cable Information

If the antenna is used with the Cisco 1552CU or 1552EU access point, the port A of the antenna must be connected to port 4 of the access point, port B of the antenna must be connected to port 6 of the access point, and port 5 of the access point must be capped with the cap enclosed with the antenna.

Note Coaxial cable loses efficiency as the frequency increases, resulting in signal loss. The cable should be kept as short as possible because cable length also causes signal loss (the longer the run, the greater the loss).

Note The antenna cable has a 0.5 in. (12.7 mm) bend radius. Sharply bending or crimping the cable may cause a degradation in performance

The antenna terminates with an N-male plug after a short, 2.5- foot (0.76-m) cable. The mating connector to the antenna is an appropriate N-female jack. The connector on the opposite end will vary according to the type of equipment used.

After the cable is attached to the antenna, make sure that the connections are sealed (if outdoors) to prevent moisture and other weathering elements from affecting performance. Cisco recommends using a coax seal (such as CoaxSeal) for outdoor connections. Silicone sealant or electrical tape are not recommended for sealing outdoor connections.

Grounding the Antenna

Follow these steps to ground the antenna in accordance with national electrical code instructions.

1. Use No. 10 AWG copper or No. 8 or larger copper-clad steel or bronze wire as ground wires for both mast and lead-in. Securely clamp the wire to the bottom of the mast.
2. Secure the lead-in wire to an antenna discharge unit and the mast ground wire to the building with stand-off insulators spaced from 4 foot (1.2 m) to 8 foot (2.4 m) apart.
3. Mount the antenna discharge unit as close as possible to where the lead-in wire enters the building.
4. Drill a hole in the building's wall as close as possible to the equipment to which you will connect the lead-in cable.
5. There may be wires in the wall. Make sure your drilling location is clear of any obstructions or other hazards.
6. Pull the cable through the hole and form a drip loop close to where it enters the building.
7. Thoroughly waterproof the lead-in area.
8. Install a lightning arrestor.
9. Connect the lead-in cable to the equipment.

Communications, Services, and Additional Information

- To receive timely, relevant information from Cisco, sign up at Cisco Profile Manager.
- To get the business impact you're looking for with the technologies that matter, visit Cisco Services.
- To submit a service request, visit Cisco Support.
- To discover and browse secure, validated enterprise-class apps, products, solutions, and services, visit Cisco DevNet.
- To obtain general networking, training, and certification titles, visit Cisco Press.
- To find warranty information for a specific product or product family, access Cisco Warranty Finder.

Cisco Bug Search Tool

Cisco Bug Search Tool (BST) is a web-based tool that acts as a gateway to the Cisco bug tracking system that maintains a comprehensive list of defects and vulnerabilities in Cisco products and software. BST provides you with detailed defect information about your products and software.

Documentation Feedback

To provide feedback about Cisco technical documentation, use the feedback form available in the right pane of every online document.

Cisco Support Community

Cisco Support Community is a forum for you to ask and answer questions, share suggestions, and collaborate with your peers. Join the forum at https://supportforums.cisco.com/index.jspa.

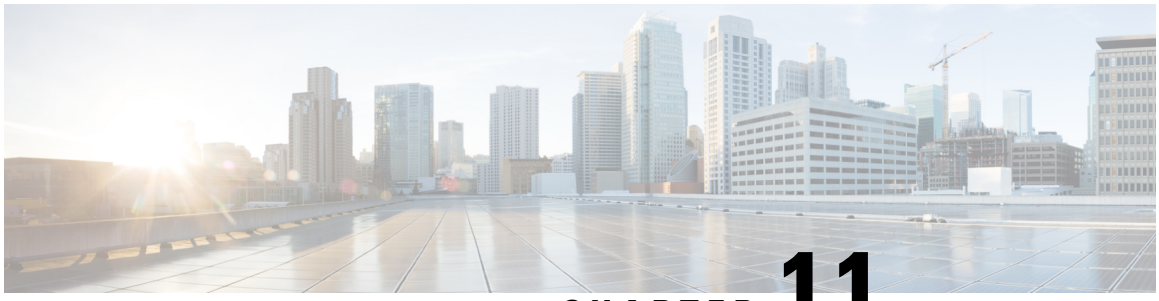

CHAPTER 11

Cisco Aironet Omnidirectional Antennas AIR-ANT2450V-N, AIR-ANT2450VG-N, AIR-ANT2450V-N-HZ, and AIR-ANT2450HG-N

This chapter contains the following:

- Overview, on page 203
- Technical Specifications, on page 204
- Radiation Patterns, on page 205
- System Requirements, on page 207
- General Safety Precautions, on page 207
- Guidelines to Achieving Optimal RF and Antenna Performance, on page 209
- Installation Notes, on page 212
- Choosing a Mounting Location, on page 212
- Tools and Equipment Required, on page 212
- Mounting the Antenna, on page 213
- Communications, Services, and Additional Information, on page 213

Overview

This document describes the Cisco Aironet AIR-ANT2450V-N, AIR-ANT2450VG-N, AIR-ANT2450V-N-HZ, and AIR-ANT2450HG-N omnidirectional antennas and provides instructions for mounting. The antennas are designed for outdoor use with Cisco Aironet Outdoor Access Points (hereafter referred to as access points) with radios operating in the 2.4 GHz frequency band.

These antennas are functionally the same, and will be referred to as a singular antenna throughout the rest of this guide. The antennas are:

Table 29: Antenna SKUs

AIR-ANT2450V-N	White-Vertical polarization
AIR-ANT2450VG-N	Gray-Vertical polarization
AIR-ANT2450HG-N	Gray-Horizontal polarization

AIR-ANT2450V-N-HZ	White-Vertical polarization, Hazardous Locations



Technical Specifications

Antenna Type	**Omnidirectional**
Operating Frequency Range	2400-2500 MHz
VSWR	2:1
Nominal Input Impedance	50 Ω
Gain	5 dBi
Polarization	AIR-ANT2450VG-N: Vertical AIR-ANT2450HG-N: Horizontal
Azimuth Plane Ripple	2 dB (Max)

Antenna Type	Omnidirectional
Elevation Plane 3 dB Beamwidth	30° (2400 - 2483 MHz)
Azimuth Plane 3 dB Beamwidth	Omnidirectional
Length	12.9 in (328.5 mm)
Diameter	1.5 in (38.1 mm)
Weight	AIR-ANT2450VG-N: 5.3 oz. (0.15 kg) AIR-ANT2450HG-N: 6.4 oz. (0.18 kg)
Connector	N-Male
Operational Temperature	-40° to +158°F (-40°C to +70°C)
Storage Temperature	-40° to +185°F (-40°C to +85°C)
Water/Foreign Body Ingress	IP67
Wind Rating (Operational)	100 mph (161 kph)

Radiation Patterns

The AIR-ANT2450V-N, AIR-ANT2450VG-N, and AIR-ANT2450V-N-HZ, share the same radiation patterns. The AIR-ANT2450HG-N has a different pattern.

AIR-ANT2450V-N, AIR-ANT2450VG-N, and AIR-ANT2450V-N-HZ

Figure 85: Azimuth Radiation Pattern

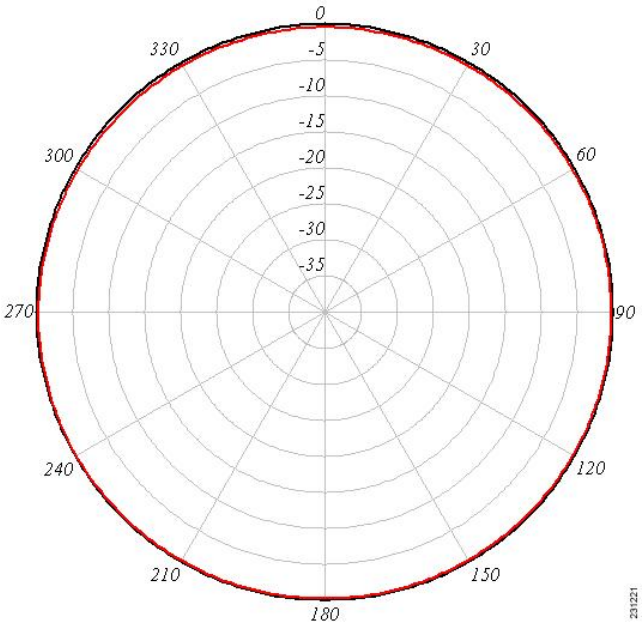

Figure 86: Elevation Radiation Pattern

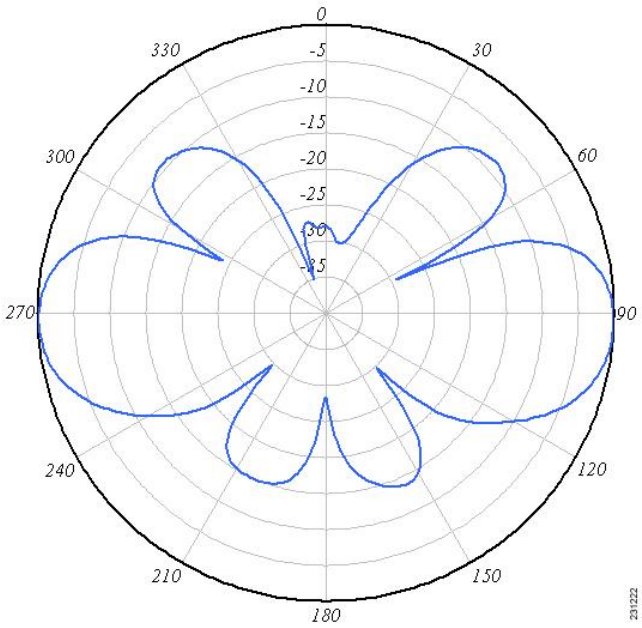

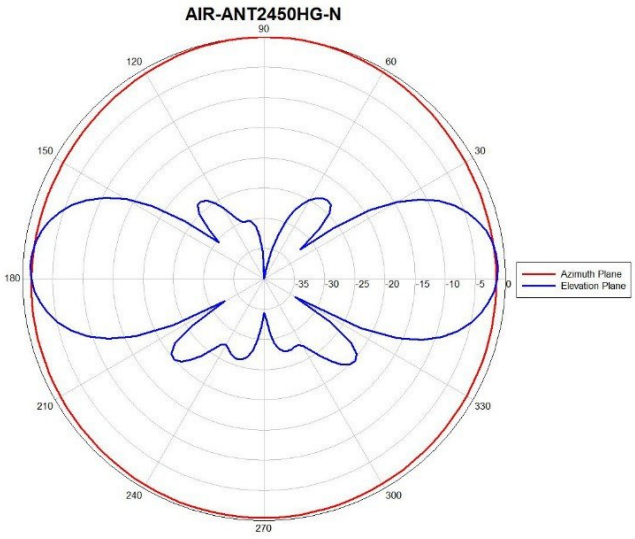

System Requirements

This antenna is designed for use with the Cisco Aironet outdoor access points.

General Safety Precautions

Warning This warning symbol means danger. You are in a situation that could cause bodily injury. Before you work on any equipment, be aware of the hazards involved with electrical circuitry and be familiar with standard practices for preventing accidents. Use the statement number provided at the end of each warning to locate its translation in the translated safety warnings that accompanied this device. **Statement 1071**

Warning Do not work on the system or connect or disconnect cables during periods of lightning activity. **Statement 1001**

Warning Do not locate the outdoor antenna near overhead power lines or other electric light or power circuits, or where it can come into contact with such circuits. When installing the antenna, take extreme care not to come into contact with such circuits, as they may cause serious injury or death. For proper installation and grounding of the antenna, please refer to national and local codes (for example, U.S.:NFPA 70, National Electrical Code, Article 810, Canada:Canadian Electrical Code, Section 54). **Statement 1052**

Warning In order to comply with FCC radio frequency (RF) exposure limits, antennas should be located at a minimum of 7.9 inches (20 cm) or more from the body of all persons. **Statement 332**

Note For your safety, and to help you achieve a good installation, please read and follow these safety precautions.

Mast Mounted or Building Mounted Installations

The following instructions are common to most mast mounted or building mounted installations. For specific installation instructions for each antenna, see the antenna data-sheet and the router hardware installation guide.

- Find someone to help you—installing an antenna is often a two-person job.
- Select your installation site with safety, as well as performance, in mind. Remember that electric power lines and phone lines look alike. For your safety, assume that any overhead line can kill you.
- Contact your electric power company. Tell them your plans and ask them to come look at your proposed installation.
- Do not use a metal ladder.
- Do not work on a wet or windy day.
- Do dress properly—wear shoes with rubber soles and heels, rubber gloves, and a long-sleeved shirt or jacket.
- If the assembly starts to drop, move away from it and let it fall. Because the antenna, mast, cable, and metal guy wires are all excellent conductors of electrical current, even the slightest touch of any of these parts to a power line completes an electrical path through the antenna and the installer.
- If any part of the antenna system should come in contact with a power line, do not touch it or try to remove it yourself. Call your local power company to have it removed safely.
- If an accident should occur with the power lines, call for qualified emergency help immediately.
- Assemble your new antenna on the ground or a level surface at the installation site.
- Connect its coaxial cable while you are on the ground and attach the antenna to the mast.
- Ensure that the mast does not fall as you raise or remove it. Use a durable non-conductive rope secured at each two foot level as the mast is raised. Have an assistant tend the rope, ready to pull the mast clear of any hazards (such as power lines) should it begin to fall.
- Use the mounting bracket provided with the antenna.
- If the installation will use guy wires:
  - Install guy anchor bolts.
  - Estimate the length of guy wire and cut it before raising the mast.
  - Attach guy wires to a mast using guy rings.
  - In the case of a guyed (tall, thin mast) installation, you must have at least one assistant to hold the mast upright while the guy wires are attached and tightened to the anchor bolts.
- Attach a “DANGER” label at eye level on the mast.
- Install ground rods to remove any static electricity buildup and connect a ground wire to the mast and ground rod. Use ground rods designed for that purpose, not a spare piece of pipe.

Unused Antenna Ports

Port plugs must be installed in any unused antenna ports.

The weatherproof caps on the connectors protect the router interior from environmental elements including water, heat, cold, and dust. They are installed on unused ports before the router is shipped.

When you install a new antenna in a port with an N-connector:

- Chassis-mounted antennas—Remove the weather proof cap before installing a chassis-mounted antenna.
- External antennas—Remove weatherproof cap, then connect the supported Cisco cable to the connector.

Guidelines to Achieving Optimal RF and Antenna Performance

Antennas are a critical component of a wireless communication system. Selecting a suitable antenna, an optimal antenna location, or antenna site is essential for optimum performance of a wireless links.

This section covers general tips for optimizing RF performance of indoor and outdoor terrestrial radio systems in the 400-7125 MHz frequency range. Examples of terrestrial radio systems include 4G LTE, 5G NR, Wi-Fi, LoRa, LR-WPAN and similar. In this context GPS SPS would not be considered a terrestrial system as the signal is received from space, not from another terrestrial site.

Because the antenna transmits and receives radio signals over the air, overall RF performance of the link is susceptible to RF obstructions and common sources of RF interference that can reduce throughput and range of the system.

Follow these guidelines to optimize performance. When in doubt, consult a qualified RF professional, and check with your solution partner for specific recommendations.

Antenna Model Selection and Performance

Consider the following when planning your installation:

- When selecting the antenna, ensure that it covers the frequency ranges or frequency bands of interest, and that it has good RF parameters such as antenna efficiency, VSWR and suitable radiation pattern for every frequency range that your application will use with this antenna.
- Antenna pattern is important. Omni-directional antennas have lower gain, but allow communicating to devices in all azimuth directions. Directional antennas concentrate the beam in a specific direction, making them ideal for point to point communication.
- When a system has multiple RF ports for receive and / or transmit, as is the case for 4G LTE , 5G NR or Wi-Fi, it is highly recommended to populate all the RF ports with suitable antennas to take advantage of MIMO, rather than rely on a single port or single antenna to save on cost. Please see the MIMO section for a detailed description of MIMO benefits.
- For RF systems that support multiple RF ports and multiple RF standards such as LTE, Wi-Fi, and GPS: consider using a multi-element antenna that integrates multiple antennas under the same radome (cover). Doing so may reduce cost compared to deploying and mounting a discrete single port antenna for every RF port.
- For communication between fixed infrastructure devices, such as mesh nodes or a point-to-point backhaul link, each device should have an antenna with the same polarization. If communicating with mobile

devices that might be randomly oriented, consider dual-polarized antennas, such as those with both vertical and horizontal or slant +45° and -45° polarized elements.

Antenna Environmental Specifications

The selected antenna must have suitable mechanical and environmental specifications for the environment where it will be deployed. For example, shock and vibration specifications for transportation, corrosion resistant construction for marine and oil and gas industries, or IP (ingress protection) rating for outdoor deployment. Indoor antennas are typically not suitable for harsh industrial environments. Please check with your system integrator for environmental requirements for your application.

Antenna Accessories and Mounting

Consider the following when planning your installation:

- Carefully consider what type of other RF accessories, besides antenna, such as RF cables, lightning arrestors or RF adapters may be required in your installations. It is best to minimize long RF cable runs due to RF signal losses in the cable. Thinner RF cables have more RF loss , thicker cables are less flexible and more expensive.
- Carefully consider how the antenna will be physically mounted, as this may affect antenna selection. For example, a stud mount mechanical mounting design is a better fit for mounting on top of an electrical cabinet than a mast mount antenna.
- For outdoor deployments, follow installation instructions for the antenna. It is good practice to keep protective covers on the radio's RF ports and any antenna or accessory RF ports until the moment the interfaces are mated. This reduces chances of contamination, trapping water or condensation inside the connector, or accidental damage to RF interfaces.

MIMO Performance and Arrays

MIMO systems deliver benefits of higher SNR, higher reliability and higher throughput compared to single antenna systems. In more technical terms, MIMO delivers array gain, diversity gain and multiplexing gain compared to single antenna.

- Array gain — Improvement in SNR (signal to noise ratio) by coherently combining signals from multiple antennas. For example, increasing SNR through beamforming techniques.
- Diversity gain — Improvement in reliability by mitigating deep fading or strong destructive EM wave interference. For example, in a two-antenna system, if one antenna is experiencing deep fading due to an EM destructive null at its location at a given instant, the other antenna is unlikely to have a null at the same instant, and the combined SNR stays at a reliable level. In contrast, a single antenna would see SNR oscillating between good SNR and very poor SNR and reliability would degrade.
- Multiplexing gain — Increase in system capacity or throughput by sending independent data over multiple spatial streams simultaneously. The number of streams cannot be more than the number of antennas. For example, to support three spatial streams, a minimum of three antennas is required. Often there may be additional antennas for diversity or redundancy, such as in the case of 4x4:3, or 4x4 MIMO with 3 spatial streams.

If deploying multiple single-element antennas for a MIMO system in an array, ensure sufficient spacing between the antennas. Omnidirectional elements should generally be at least one wavelength apart at the lowest operating frequency.

Consider the following:

- For Wi-Fi systems operating in the 2.4, 5, and/or 6 GHz bands, space elements at least 5 inches (12.5 cm) apart.
- For 4G LTE and 5G systems with the lowest operating frequency of 617 MHz , space elements at least 20 inches (50 cm) apart.
- Note that spacing between elements inside multi-element MIMO antennas is often less than one wavelength. However multi-element antennas are engineered with MIMO performance in mind, by providing antenna diversity through pattern, polarization, and isolation between MIMO elements.

Antenna siting and location

Consider the following when planning your installation:

- Plan antenna location ahead of time. Ideal location for an antenna is in LOS (line of sight) of the counterpart that it is trying to communicate with. Under LOS conditions the signals propagate directly between the two communication nodes, without relying on signal bouncing off a wall or other structure to reach the counterpart. This is sometimes not possible to achieve in practice, but it is a useful goal to keep in mind when optimizing antenna location.
- While it is good to keep RF cables short, it is most desirable for an antenna to be in the best location it can be to provide the desired coverage.
- For large deployments involving multiple units communicating with each other across a complex urban or industrial landscape, consider running an RF propagation modeling study to predict approximate simulated coverage maps and determine initial placement of the units. A propagation study may help reduce overall deployment cost by discovering and mitigating issues with RF coverage before the infrastructure is physically installed.
- Keep the antenna away from metal obstructions such as heating and air-conditioning ducts, large ceiling trusses, building superstructures, and major power cabling runs. One exception is if the antenna is designed to be mounted on a ground plane. If mounting on a ground plane, mount the antenna on a flat metal surface away from adjacent obstructions.
- It is strongly recommended not to install antennas directly on the router or access point (AP), unless the router or AP is specifically engineered to directly mount the antennas. Products that are engineered for direct mounting of antennas specifically address each of the below issues.
- Reasons to mount antennas away from the router include:
    - Router location may not be optimal location for antenna to communicate with the counterpart wirelessly, so router and antenna may need to be in different locations.
    - Router may have a clutter of Ethernet cable and power cables around it, which will obstruct antenna signal.
    - A number of routers, such as the IR1835, are modular. They have plug-in RF modules for Wi-Fi , 4G LTE or 5G NR such as WP-WIFI6, P-LTEAP18-GL, P-5GS6-GL. These modules have RF connectors spaced close together, and while it is mechanically possible to install four or five antennas directly attached, this will result in significant degradation to RF performance of antennas due to mutual de-tuning between closely spaced antennas. It is strongly recommended to install antennas away from the chassis in modular cases.

- If installing an antenna indoors, consider that the density and electromagnetic properties of the materials used in the building construction determines the number of walls the signal can pass through and still maintain adequate coverage.
  - Paper and vinyl walls have very little effect on signal penetration.
  - Solid and pre-cast concrete walls limit signal penetration to one or two walls without degrading coverage.
  - Concrete and wood block walls limit signal penetration to three or four walls.
  - A signal can penetrate five or six walls constructed of drywall or wood.
  - A thick metal wall causes signals to reflect off, causing poor penetration.
  - A chain link fence or wire mesh spaced between 1 and 1 1/2 in. (2.5 and 3.8 cm) acts as a harmonic reflector that blocks a 2.4-GHz radio signal.
  - Install the antenna away from microwave ovens and 2-GHz cordless phones. These products can cause signal interference because they operate in the same frequency range as the device your antenna is connected to.

Installation Notes

The antenna is designed to connect to a dedicated antenna port on the access point. No special tools are required to install the antenna.

The antenna is resistant to the full range of outdoor environments. After the antenna is attached to the access point, seal the connections to prevent moisture and other weathering elements from affecting performance. Cisco recommends using a coax seal (such as CoaxSeal) for outdoor connections. Silicone sealant or electrical tape are not recommended for sealing outdoor connections.

Choosing a Mounting Location

The antenna is designed to create an omnidirectional broadcast pattern. To achieve this pattern, the access point should be mounted clear of any obstructions to the sides of the radiating element. If the mounting location is on the side of a building or tower, the antenna pattern is degraded on the building or tower side.

Generally, the higher an antenna is above the ground, the better it performs. A practice is to install your antenna about 5 to 10 foot (1.5 to 3 m) above the roof line and away from all power lines and obstructions.

Tools and Equipment Required

No tools are required to mount the antenna to the access point. However, you may need a ¾-in. (19-mm) open end or combination wrench (or adjustable wrench) to remove the antenna port covers.

For information about tools required to mount the access point, see the appropriate access point documentation.

Mounting the Antenna

To connect the antenna to the access point, follow these steps:

1. If necessary, remove the antenna port cover.
2. Align the antenna's N connector with the appropriate antenna port.
3. Gently push the antenna into the port.
4. Hand-tighten the antenna.

Communications, Services, and Additional Information

- To receive timely, relevant information from Cisco, sign up at Cisco Profile Manager.
- To get the business impact you're looking for with the technologies that matter, visit Cisco Services.
- To submit a service request, visit Cisco Support.
- To discover and browse secure, validated enterprise-class apps, products, solutions, and services, visit Cisco DevNet.
- To obtain general networking, training, and certification titles, visit Cisco Press.
- To find warranty information for a specific product or product family, access Cisco Warranty Finder.

Cisco Bug Search Tool

Cisco Bug Search Tool (BST) is a web-based tool that acts as a gateway to the Cisco bug tracking system that maintains a comprehensive list of defects and vulnerabilities in Cisco products and software. BST provides you with detailed defect information about your products and software.

Documentation Feedback

To provide feedback about Cisco technical documentation, use the feedback form available in the right pane of every online document.

Cisco Support Community

Cisco Support Community is a forum for you to ask and answer questions, share suggestions, and collaborate with your peers. Join the forum at https://supportforums.cisco.com/index.jspa.

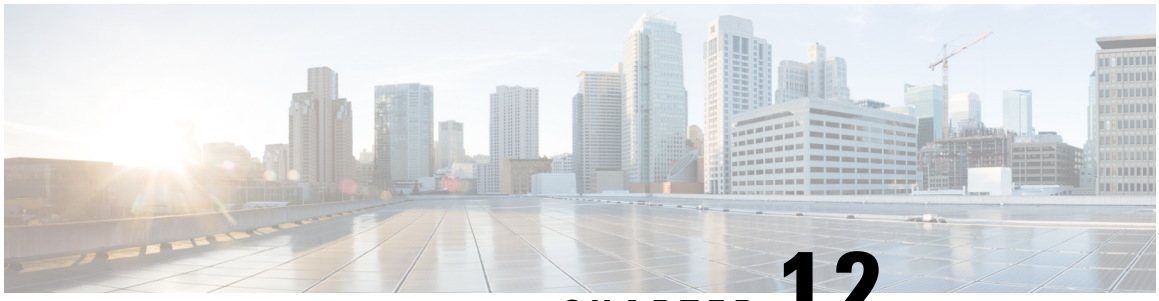

CHAPTER 12

Cisco Aironet 6.5-dBi Diversity Patch Antenna (AIR-ANT2465P-R)

This chapter contains the following:

- Overview, on page 215
- Technical Specifications, on page 216
- System Requirements, on page 218
- General Safety Precautions, on page 218
- Guidelines to Achieving Optimal RF and Antenna Performance, on page 220
- Installing the Antenna, on page 223
- Communications, Services, and Additional Information, on page 225

Overview

This section describes the AIR-ANT2465P-R 6-dBi patch antenna specifications and mounting instructions. The antenna operates in the 2.4-GHz frequency range and is designed for use in both indoor and outdoor environments.

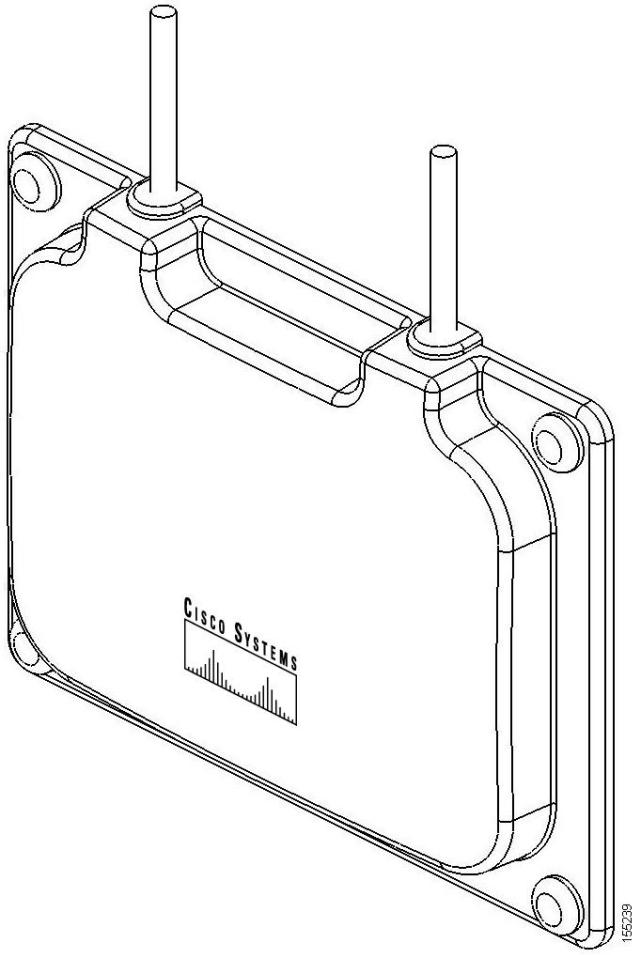

Technical Specifications

Antenna type	Diversity patch
Operating frequency range	2400 – 2484 MHz
Nominal input impedance	50 Ohms
2:1 VSWR bandwidth	2400 – 2484 MHz
Peak gain	6.5 dBi
Polarization	Linear, vertical
E-plane 3-dB beamwidth	65°
H-plane 3-dB beamwidth	75°
Front-to-back ratio	15 dB

Antenna type	Diversity patch
Cross-pol discrimination	15 dB
Cable length and type	36 in. (91.4 cm)Times AA-9303 or equivalent (plenum rated)
Connector type	RP-TNC
Length	4.4 in. (11.1 cm)
Width	6.6 in. (16.7 cm)
Height	1 in. (2.5 cm)
Operating temperature range	–22°F to 158°F (–30°C to 70°C)
Storage temperature range	–40°F to 185°F (–40°C – 85°C)
Environment	Indoor/outdoor

Figure 87: Left Antenna Azimuth and Elevation Pattern

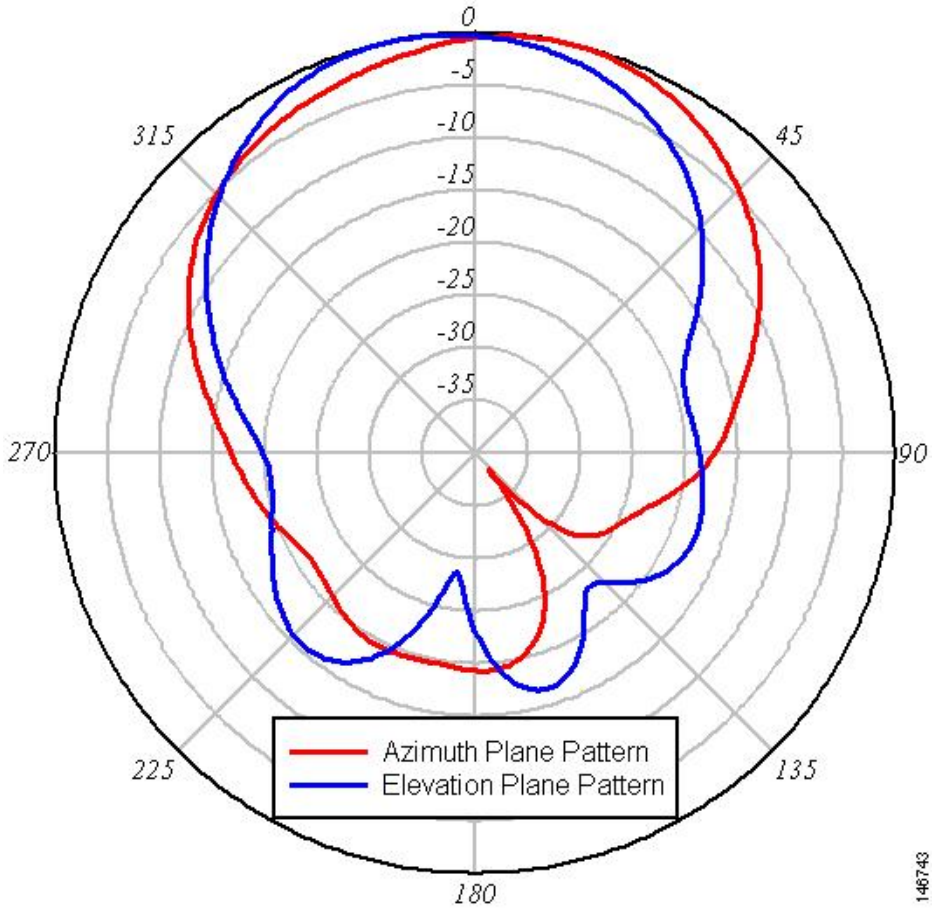

Figure 88: Right Antenna Azimuth and Elevation Pattern

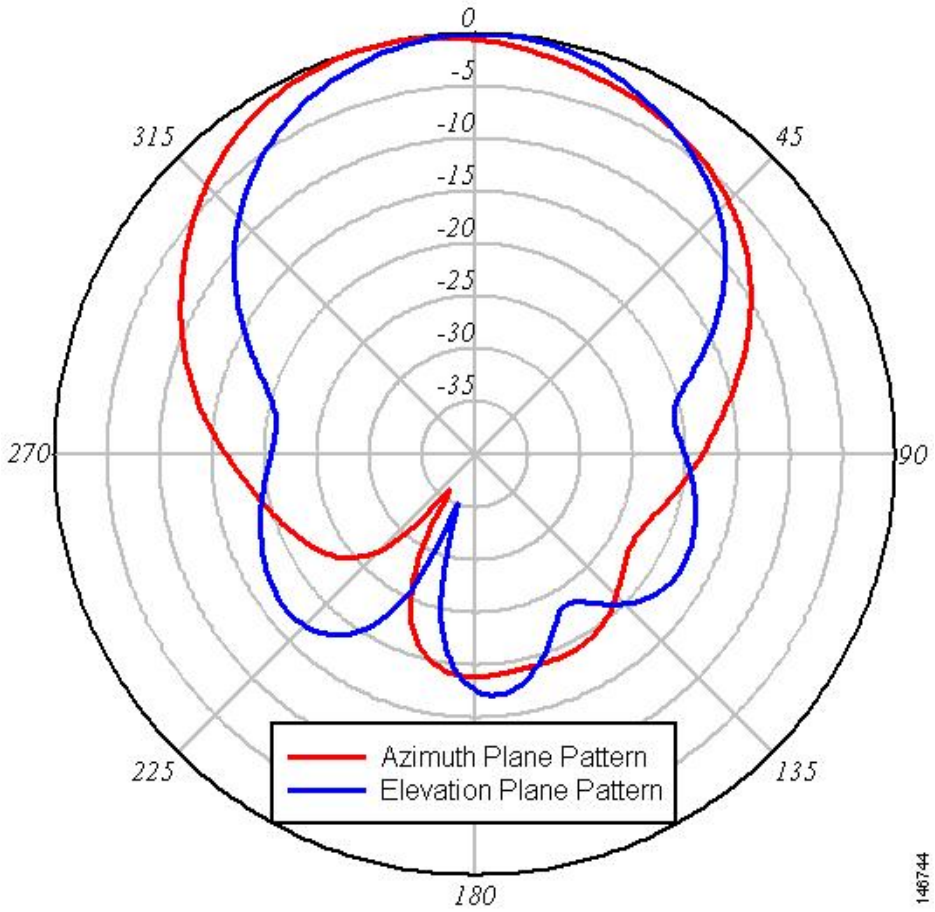

System Requirements

This antenna is designed for use with Cisco Aironet access points and bridges but can be used with any 2.4-GHz Cisco Aironet radio device that utilizes an RP-TNC connector.

General Safety Precautions

Warning This warning symbol means danger. You are in a situation that could cause bodily injury. Before you work on any equipment, be aware of the hazards involved with electrical circuitry and be familiar with standard practices for preventing accidents. Use the statement number provided at the end of each warning to locate its translation in the translated safety warnings that accompanied this device. **Statement 1071**

Warning Do not work on the system or connect or disconnect cables during periods of lightning activity. **Statement 1001**

Warning Do not locate the outdoor antenna near overhead power lines or other electric light or power circuits, or where it can come into contact with such circuits. When installing the antenna, take extreme care not to come into contact with such circuits, as they may cause serious injury or death. For proper installation and grounding of the antenna, please refer to national and local codes (for example, U.S.:NFPA 70, National Electrical Code, Article 810, Canada:Canadian Electrical Code, Section 54). **Statement 1052**

Warning In order to comply with FCC radio frequency (RF) exposure limits, antennas should be located at a minimum of 7.9 inches (20 cm) or more from the body of all persons. **Statement 332**

Note For your safety, and to help you achieve a good installation, please read and follow these safety precautions.

Mast Mounted or Building Mounted Installations

The following instructions are common to most mast mounted or building mounted installations. For specific installation instructions for each antenna, see the antenna data-sheet and the router hardware installation guide.

- Find someone to help you—installing an antenna is often a two-person job.
- Select your installation site with safety, as well as performance, in mind. Remember that electric power lines and phone lines look alike. For your safety, assume that any overhead line can kill you.
- Contact your electric power company. Tell them your plans and ask them to come look at your proposed installation.
- Do not use a metal ladder.
- Do not work on a wet or windy day.
- Do dress properly—wear shoes with rubber soles and heels, rubber gloves, and a long-sleeved shirt or jacket.
- If the assembly starts to drop, move away from it and let it fall. Because the antenna, mast, cable, and metal guy wires are all excellent conductors of electrical current, even the slightest touch of any of these parts to a power line completes an electrical path through the antenna and the installer.
- If any part of the antenna system should come in contact with a power line, do not touch it or try to remove it yourself. Call your local power company to have it removed safely.
- If an accident should occur with the power lines, call for qualified emergency help immediately.
- Assemble your new antenna on the ground or a level surface at the installation site.
- Connect its coaxial cable while you are on the ground and attach the antenna to the mast.

- Ensure that the mast does not fall as you raise or remove it. Use a durable non-conductive rope secured at each two foot level as the mast is raised. Have an assistant tend the rope, ready to pull the mast clear of any hazards (such as power lines) should it begin to fall.
- Use the mounting bracket provided with the antenna.
- If the installation will use guy wires:
  - Install guy anchor bolts.
  - Estimate the length of guy wire and cut it before raising the mast.
  - Attach guy wires to a mast using guy rings.
  - In the case of a guyed (tall, thin mast) installation, you must have at least one assistant to hold the mast upright while the guy wires are attached and tightened to the anchor bolts.
- Attach a “DANGER” label at eye level on the mast.
- Install ground rods to remove any static electricity buildup and connect a ground wire to the mast and ground rod. Use ground rods designed for that purpose, not a spare piece of pipe.

Unused Antenna Ports

Port plugs must be installed in any unused antenna ports.

The weatherproof caps on the connectors protect the router interior from environmental elements including water, heat, cold, and dust. They are installed on unused ports before the router is shipped.

When you install a new antenna in a port with an N-connector:

- Chassis-mounted antennas—Remove the weather proof cap before installing a chassis-mounted antenna.
- External antennas—Remove weatherproof cap, then connect the supported Cisco cable to the connector.

Guidelines to Achieving Optimal RF and Antenna Performance

Antennas are a critical component of a wireless communication system. Selecting a suitable antenna, an optimal antenna location, or antenna site is essential for optimum performance of a wireless links.

This section covers general tips for optimizing RF performance of indoor and outdoor terrestrial radio systems in the 400-7125 MHz frequency range. Examples of terrestrial radio systems include 4G LTE, 5G NR, Wi-Fi, LoRa, LR-WPAN and similar. In this context GPS SPS would not be considered a terrestrial system as the signal is received from space, not from another terrestrial site.

Because the antenna transmits and receives radio signals over the air, overall RF performance of the link is susceptible to RF obstructions and common sources of RF interference that can reduce throughput and range of the system.

Follow these guidelines to optimize performance. When in doubt, consult a qualified RF professional, and check with your solution partner for specific recommendations.

Antenna Model Selection and Performance

Consider the following when planning your installation:

- When selecting the antenna, ensure that it covers the frequency ranges or frequency bands of interest, and that it has good RF parameters such as antenna efficiency, VSWR and suitable radiation pattern for every frequency range that your application will use with this antenna.
- Antenna pattern is important. Omni-directional antennas have lower gain, but allow communicating to devices in all azimuth directions. Directional antennas concentrate the beam in a specific direction, making them ideal for point to point communication.
- When a system has multiple RF ports for receive and / or transmit, as is the case for 4G LTE , 5G NR or Wi-Fi, it is highly recommended to populate all the RF ports with suitable antennas to take advantage of MIMO, rather than rely on a single port or single antenna to save on cost. Please see the MIMO section for a detailed description of MIMO benefits.
- For RF systems that support multiple RF ports and multiple RF standards such as LTE, Wi-Fi, and GPS: consider using a multi-element antenna that integrates multiple antennas under the same radome (cover). Doing so may reduce cost compared to deploying and mounting a discrete single port antenna for every RF port.
- For communication between fixed infrastructure devices, such as mesh nodes or a point-to-point backhaul link, each device should have an antenna with the same polarization. If communicating with mobile devices that might be randomly oriented, consider dual-polarized antennas, such as those with both vertical and horizontal or slant +45° and -45° polarized elements.

Antenna Environmental Specifications

The selected antenna must have suitable mechanical and environmental specifications for the environment where it will be deployed. For example, shock and vibration specifications for transportation, corrosion resistant construction for marine and oil and gas industries, or IP (ingress protection) rating for outdoor deployment. Indoor antennas are typically not suitable for harsh industrial environments. Please check with your system integrator for environmental requirements for your application.

Antenna Accessories and Mounting

Consider the following when planning your installation:

- Carefully consider what type of other RF accessories, besides antenna, such as RF cables, lightning arrestors or RF adapters may be required in your installations. It is best to minimize long RF cable runs due to RF signal losses in the cable. Thinner RF cables have more RF loss , thicker cables are less flexible and more expensive.
- Carefully consider how the antenna will be physically mounted, as this may affect antenna selection. For example, a stud mount mechanical mounting design is a better fit for mounting on top of an electrical cabinet than a mast mount antenna.
- For outdoor deployments, follow installation instructions for the antenna. It is good practice to keep protective covers on the radio’s RF ports and any antenna or accessory RF ports until the moment the interfaces are mated. This reduces chances of contamination, trapping water or condensation inside the connector, or accidental damage to RF interfaces.

MIMO Performance and Arrays

MIMO systems deliver benefits of higher SNR, higher reliability and higher throughput compared to single antenna systems. In more technical terms, MIMO delivers array gain, diversity gain and multiplexing gain compared to single antenna.

- Array gain — Improvement in SNR (signal to noise ratio) by coherently combining signals from multiple antennas. For example, increasing SNR through beamforming techniques.
- Diversity gain — Improvement in reliability by mitigating deep fading or strong destructive EM wave interference. For example, in a two-antenna system, if one antenna is experiencing deep fading due to an EM destructive null at its location at a given instant, the other antenna is unlikely to have a null at the same instant, and the combined SNR stays at a reliable level. In contrast, a single antenna would see SNR oscillating between good SNR and very poor SNR and reliability would degrade.
- Multiplexing gain — Increase in system capacity or throughput by sending independent data over multiple spatial streams simultaneously. The number of streams cannot be more than the number of antennas. For example, to support three spatial streams, a minimum of three antennas is required. Often there may be additional antennas for diversity or redundancy, such as in the case of 4x4:3, or 4x4 MIMO with 3 spatial streams.

If deploying multiple single-element antennas for a MIMO system in an array, ensure sufficient spacing between the antennas. Omnidirectional elements should generally be at least one wavelength apart at the lowest operating frequency.

Consider the following:

- For Wi-Fi systems operating in the 2.4, 5, and/or 6 GHz bands, space elements at least 5 inches (12.5 cm) apart.
- For 4G LTE and 5G systems with the lowest operating frequency of 617 MHz , space elements at least 20 inches (50 cm) apart.
- Note that spacing between elements inside multi-element MIMO antennas is often less than one wavelength. However multi-element antennas are engineered with MIMO performance in mind, by providing antenna diversity through pattern, polarization, and isolation between MIMO elements.

Antenna siting and location

Consider the following when planning your installation:

- Plan antenna location ahead of time. Ideal location for an antenna is in LOS (line of sight) of the counterpart that it is trying to communicate with. Under LOS conditions the signals propagate directly between the two communication nodes, without relying on signal bouncing off a wall or other structure to reach the counterpart. This is sometimes not possible to achieve in practice, but it is a useful goal to keep in mind when optimizing antenna location.
- While it is good to keep RF cables short, it is most desirable for an antenna to be in the best location it can be to provide the desired coverage.
- For large deployments involving multiple units communicating with each other across a complex urban or industrial landscape, consider running an RF propagation modeling study to predict approximate simulated coverage maps and determine initial placement of the units. A propagation study may help reduce overall deployment cost by discovering and mitigating issues with RF coverage before the infrastructure is physically installed.
- Keep the antenna away from metal obstructions such as heating and air-conditioning ducts, large ceiling trusses, building superstructures, and major power cabling runs. One exception is if the antenna is designed to be mounted on a ground plane. If mounting on a ground plane, mount the antenna on a flat metal surface away from adjacent obstructions.

- It is strongly recommended not to install antennas directly on the router or access point (AP), unless the router or AP is specifically engineered to directly mount the antennas. Products that are engineered for direct mounting of antennas specifically address each of the below issues.
- Reasons to mount antennas away from the router include:
  - Router location may not be optimal location for antenna to communicate with the counterpart wirelessly, so router and antenna may need to be in different locations.
  - Router may have a clutter of Ethernet cable and power cables around it, which will obstruct antenna signal.
  - A number of routers, such as the IR1835, are modular. They have plug-in RF modules for Wi-Fi , 4G LTE or 5G NR such as WP-WIFI6, P-LTEAP18-GL, P-5GS6-GL. These modules have RF connectors spaced close together, and while it is mechanically possible to install four or five antennas directly attached, this will result in significant degradation to RF performance of antennas due to mutual de-tuning between closely spaced antennas. It is strongly recommended to install antennas away from the chassis in modular cases.
- If installing an antenna indoors, consider that the density and electromagnetic properties of the materials used in the building construction determines the number of walls the signal can pass through and still maintain adequate coverage.
  - Paper and vinyl walls have very little effect on signal penetration.
  - Solid and pre-cast concrete walls limit signal penetration to one or two walls without degrading coverage.
  - Concrete and wood block walls limit signal penetration to three or four walls.
  - A signal can penetrate five or six walls constructed of drywall or wood.
  - A thick metal wall causes signals to reflect off, causing poor penetration.
  - A chain link fence or wire mesh spaced between 1 and 1 1/2 in. (2.5 and 3.8 cm) acts as a harmonic reflector that blocks a 2.4-GHz radio signal.
  - Install the antenna away from microwave ovens and 2-GHz cordless phones. These products can cause signal interference because they operate in the same frequency range as the device your antenna is connected to.

Installing the Antenna

You can install the antenna on any flat indoor or outdoor vertical surface. Hardware for mounting the antenna on drywall is provided. If you intend to install your antenna on another surface, you must provide the appropriate hardware.



Note Four mounting screws are provided to mount the antenna. To ensure a safe, reliable, and long-standing installation, you must use all four screws to mount the antenna.

Tools and Equipment Required

A mounting installation kit is shipped with the antenna and consists of the following hardware:

- Four #8 x ¾ screws
- Four #8 plastic anchors
- Four end caps

You need the following tools and equipment, which are not provided.

- A Phillips screwdriver
- A drill
- A #29 ((0.136-in (3.45 mm)) drill bit (For drywall installation, other surfaces may require a different size.)
- A pencil
- A small mallet or hammer

Mounting on a Vertical Surface

This procedure describes mounting the antenna on a drywall surface. If you are mounting the antenna on any other type of surface, your procedure may vary slightly.

To mount your antenna on a vertical surface:

1. Determine the location where you will mount the antenna.
2. Use the antenna as a template to mark the locations of the four mounting holes.
3. Use a drill and #29 drill bit to drill four holes at the locations you marked in Step 2.
4. Start a plastic anchor into each hole.
5. Use a mallet or small hammer to seat the anchors into the wall.
6. Align the antenna’s mounting holes with the anchors.
7. Start a #8 x ¾ screw into each antenna mounting hole.
8. Use a Phillips screwdriver to secure the antenna to the wall. Do not overtighten.
9. Install the end caps into the antenna mounting holes.
10. Remove the yellow outdoor installation warning label from the antenna radome.

Outdoor Installations

You can mount this antenna outdoors. If you mount the antenna outdoors, you must provide the mounting hardware. For outdoor installations, Follow the instructions printed on the back of the antenna.

Caution An orientation arrow is printed on the back of the antenna that indicates the orientation for outdoor installations. You must install the antenna with the orientation arrow pointing down to prevent any water intrusion and to provide a drain for any moisture that may accumulate inside the antenna.

Suggested Cable

Cisco recommends a high-quality, low-loss cable for use with the antenna.

Note Coaxial cable loses efficiency as the frequency increases, resulting in signal loss. The cable should be kept as short as possible because cable length also determines the amount of signal loss (the longer the run, the greater the loss).

The antenna terminates with a RP-TNC plug after a short, 3 foot (0.91-m) cable. The mating connector to the antenna is an appropriate RP-TNC jack. The connector on the opposite end will vary according to the type of equipment used.

After the cable is attached to the antenna, ensure that the connections are sealed (if outdoors) to prevent moisture and other weathering elements from affecting performance. Cisco recommends using a coax seal (such as CoaxSeal) for outdoor connections. Silicon sealant or electrical tape are not recommended for sealing outdoor connections.

Grounding the Antenna

Follow these steps to ground the antenna in accordance with national electrical code instructions.

Step 1 Use No. 10 AWG copper or No. 8 or larger copper-clad steel or bronze wire as a ground wire.

Step 2 Secure the ground wire to a static discharge unit (lightning arrestor, Cisco Aironet AIR-ACC245LA-R or equivalent) and then to a suitable building ground. If possible, route the ground wire from the discharge unit to the ground using stand-off insulators spaced from 4 foot (1.2 m) to 8 foot (2.4 m) apart.

Step 3 Mount the antenna discharge unit as close as possible to where the antenna cable enters the building.

Step 4 Drill a hole in the building's wall as close as possible to the access point to which you will connect the antenna cable.

Caution There may be wires in the wall. Ensure that your drilling location is clear of any obstructions or other hazards.

Step 5 Pull the cable through the hole and form a drip loop close to where it enters the building.

Step 6 Thoroughly waterproof the lead-in area.

Step 7 Connect the antenna cable to the access point.

Communications, Services, and Additional Information

- To receive timely, relevant information from Cisco, sign up at Cisco Profile Manager.

- To get the business impact you're looking for with the technologies that matter, visit Cisco Services.
- To submit a service request, visit Cisco Support.
- To discover and browse secure, validated enterprise-class apps, products, solutions, and services, visit Cisco DevNet.
- To obtain general networking, training, and certification titles, visit Cisco Press.
- To find warranty information for a specific product or product family, access Cisco Warranty Finder.

Cisco Bug Search Tool

Cisco Bug Search Tool (BST) is a web-based tool that acts as a gateway to the Cisco bug tracking system that maintains a comprehensive list of defects and vulnerabilities in Cisco products and software. BST provides you with detailed defect information about your products and software.

Documentation Feedback

To provide feedback about Cisco technical documentation, use the feedback form available in the right pane of every online document.

Cisco Support Community

Cisco Support Community is a forum for you to ask and answer questions, share suggestions, and collaborate with your peers. Join the forum at https://supportforums.cisco.com/index.jspa.

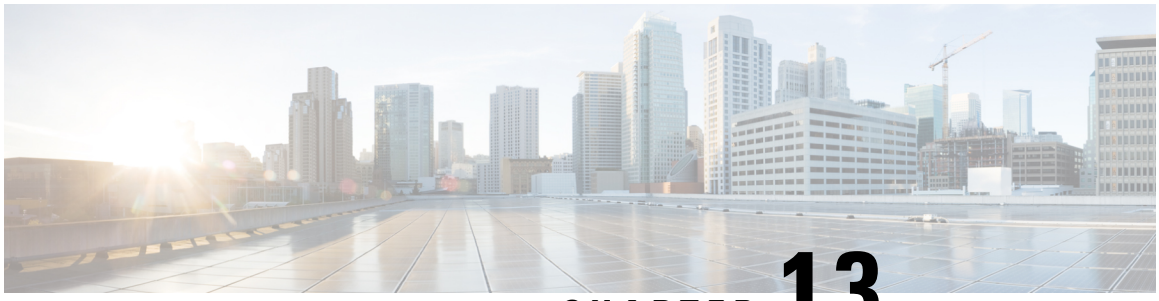

CHAPTER 13

Cisco Aironet 8-dBi Omni-Directional Antenna (AIR-ANT2480V-N)

This chapter contains the following:

- Overview, on page 227
- Technical Specifications, on page 228
- System Requirements, on page 234
- General Safety Precautions, on page 234
- Guidelines to Achieving Optimal RF and Antenna Performance, on page 236
- Installation Notes, on page 239
- Communications, Services, and Additional Information, on page 241

Overview

This section describes the Cisco Aironet AIR-ANT2480V-N 8 dBi Omni-directional Antenna, and provides specifications and mounting instructions. The antenna operates in the 2400 MHz frequency range and is designed for outdoor use with Cisco Aironet 1500 Series Lightweight Outdoor Mesh Access Points.



Technical Specifications

Antenna type	Omni-directional (collinear array)
Operating frequency range	2400–2484 MHz
VSWR	< 1.7:1
Gain	8 dBi
Polarization	Linear, vertical
Horizontal half-power beamwidth	10 degrees
Vertical half-power beamwidth	Omni-directional
Length	19-1/2 in. (49.5 cm)
Tube diameter	3/4 in. (1.91 cm)
Cable length and type	none
Connector	N-male
Operating temperature	–22 to 158° F (–30 to +70° C)

Wind rating	100 mph operational, 165 mph gusts (160–265 km/h)

Figure 89: Azimuth Radiation Pattern

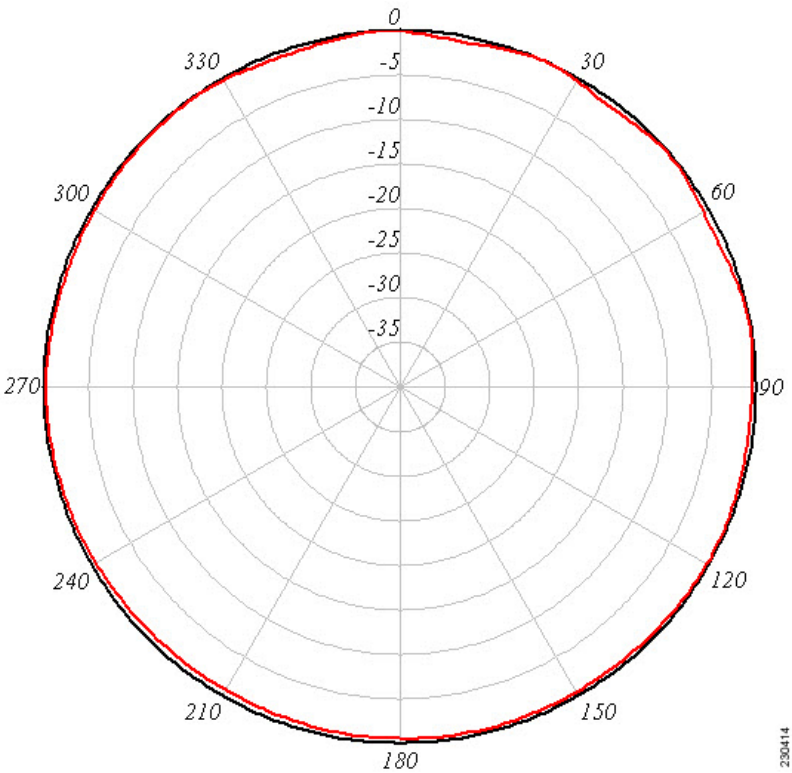

Figure 90: Elevation Radiation Pattern

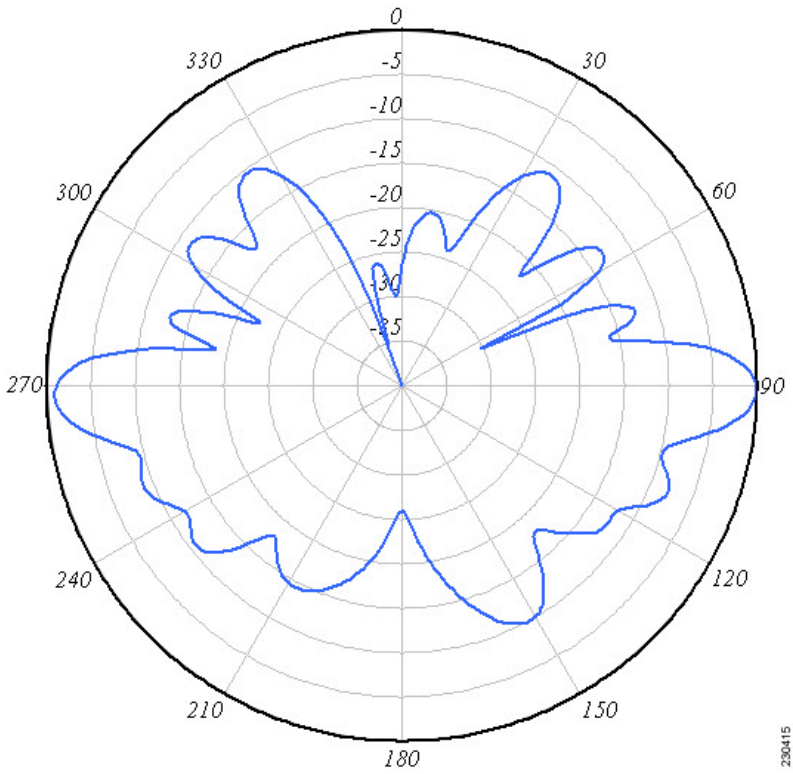

The following tables list the minimum required attenuation between the access point radio and the antenna when using the lowest RF power setting. Using a higher RF power setting will require additional attenuation (for a given antenna).

The attenuation can be in the form of an attenuator, coax cable loss, or both. This attenuation is required for the system to meet the regulatory requirements of the indicated country. Failure to install the minimum amount of attenuation shown results in non-compliant operation. The following tables show the required attenuation in dB.

Note X indicates that the antenna is not authorized for use in that country.

Table 30: Required Attenuation in dB for 2.4 GHz Antennas (802.11 B /G) (Asia)

	AIR-ANT2480V-N 2.4 GHZ 8 dBi Omni	AIR-ANT2410Y-R 2.4 GHZ 10 dBi Yagi	AIR-ANT2414S-R 2.4 GHZ 14 dBi Sector
Australia	None	None	None
China	None	None	None
Hong Kong	None	None	None

	AIR-ANT2480V-N 2.4 GHZ 8 dBi Omni	AIR-ANT2410Y-R 2.4 GHZ 10 dBi Yagi	AIR-ANT2414S-R 2.4 GHZ 14 dBi Sector
India	None	None	None
Japan	None	X	X
Korea	X	X	X
New Zealand	None	None	None
Singapore	None	–1	–5
Taiwan	None	X	X
Thailand	None	–1	–5

Table 31: Required Attenuation in dB for 5 GHz Antennas (802.11 A) (Asia)

	AIR-ANT58G10SSA-N 5 GHz 9.5 dBi Sector	AIR-ANT5114P-N 4.9–5.8 GHz 14 dBi Patch	AIR-ANT5117S-N 4.9–5.8 GHz 17 dBi Sector
Australia	None	–1	–4
China	None	–1	–4
Hong Kong	None	–1	–4
India	X	X	X
Japan	X	X	X
Korea	X	X	X
New Zealand	None	–1	–4
Singapore	None	–1	–4
Taiwan	None	X	X
Thailand	X	X	X

Table 32: Required Attenuation in dB for 2.4 GHz Antennas (802.11 B /G) (EU)

	AIR-ANT2480V-N 2.4 GHZ 8 dBi Omni	AIR-ANT2410Y-R 2.4 GHZ 10 dBi Yagi	AIR-ANT2414S-R 2.4 GHZ 14 dBi Sector
Belgium	None	–1	–5
Denmark	None	–1	–5
Finland	None	–1	–5
France	None	–1	–5
Germany	None	–1	–5
Italy	None	–1	–5
Netherlands	None	–1	–5
Norway	None	–1	–5
Spain	None	–1	–5
Sweden	None	–1	–5
Switzerland	None	–1	–5
United Kingdom	None	–1	–5

Table 33: Required Attenuation in dB for 5 GHz Antennas (802.11 A) (EU)

	AIR-ANT58G10SSA-N 5 GHz 9.5 dBi Sector	AIR-ANT5114P-N 4.9–5.8 GHz 14 dBi Patch	AIR-ANT5117S-N 4.9–5.8 GHz 17 dBi Sector
Belgium	None	–2	–5
Denmark	None	–2	–5
Finland	None	–2	–5
France	None	–2	–5
Germany	None	–2	–5
Italy	None	–2	–5
Netherlands	None	–2	–5
Norway	None	–2	–5

	AIR-ANT58G10SSA-N 5 GHz 9.5 dBi Sector	AIR-ANT5114P-N 4.9–5.8 GHz 14 dBi Patch	AIR-ANT5117S-N 4.9–5.8 GHz 17 dBi Sector
Spain	None	–2	–5
Sweden	None	–2	–5
Switzerland	None	–2	–5
United Kingdom	None	–2	–5

Table 34: Required Attenuation in dB for 2.4 GHz Antennas (802.11 B /G) (North America)

	AIR-ANT2480V-N 2.4 GHZ 8 dBi Omni	AIR-ANT2410Y-R 2.4 GHZ 10 dBi Yagi	AIR-ANT2414S-R 2.4 GHZ 14 dBi Sector
United States	None	X	X
Canada	None	X	X
Mexico	None	None	None

Table 35: Required Attenuation in dB for 5 GHz Antennas (802.11 A) (North America)

	AIR-ANT58G10SSA-N 5 GHz 9.5 dBi Sector	AIR-ANT5114P-N 4.9–5.8 GHz 14 dBi Patch	AIR-ANT5117S-N 4.9–5.8 GHz 17 dBi Sector
United States	None	None	None
Canada	None	None	None
Mexico	None	–1	–4

Table 36: Required Attenuation in dB for 2.4 GHz Antennas (802.11 B /G) (South America)

	AIR-ANT2480V-N 2.4 GHZ 8 dBi Omni	AIR-ANT2410Y-R 2.4 GHZ 10 dBi Yagi	AIR-ANT2414S-R 2.4 GHZ 14 dBi Sector
Brazil	None	None	None

Table 37: Required Attenuation in dB for 5 GHz Antennas (802.11 A) (South America)

	AIR-ANT58G10SSA-N 5 GHz 9.5 dBi Sector	AIR-ANT5114P-N 4.9–5.8 GHz 14 dBi Patch	AIR-ANT5117S-N 4.9–5.8 GHz 17 dBi Sector
Brazil	None	–1	–4

System Requirements

This antenna is designed for use with Cisco Aironet access points and bridges but can be used with any Cisco Aironet radio device that uses an N-connector.

General Safety Precautions

Warning This warning symbol means danger. You are in a situation that could cause bodily injury. Before you work on any equipment, be aware of the hazards involved with electrical circuitry and be familiar with standard practices for preventing accidents. Use the statement number provided at the end of each warning to locate its translation in the translated safety warnings that accompanied this device. **Statement 1071**

Warning Do not work on the system or connect or disconnect cables during periods of lightning activity. **Statement 1001**

Warning Do not locate the outdoor antenna near overhead power lines or other electric light or power circuits, or where it can come into contact with such circuits. When installing the antenna, take extreme care not to come into contact with such circuits, as they may cause serious injury or death. For proper installation and grounding of the antenna, please refer to national and local codes (for example, U.S.:NFPA 70, National Electrical Code, Article 810, Canada:Canadian Electrical Code, Section 54). **Statement 1052**

Warning In order to comply with FCC radio frequency (RF) exposure limits, antennas should be located at a minimum of 7.9 inches (20 cm) or more from the body of all persons. **Statement 332**

Note For your safety, and to help you achieve a good installation, please read and follow these safety precautions.

Mast Mounted or Building Mounted Installations

The following instructions are common to most mast mounted or building mounted installations. For specific installation instructions for each antenna, see the antenna data-sheet and the router hardware installation guide.

- Find someone to help you—installing an antenna is often a two-person job.
- Select your installation site with safety, as well as performance, in mind. Remember that electric power lines and phone lines look alike. For your safety, assume that any overhead line can kill you.
- Contact your electric power company. Tell them your plans and ask them to come look at your proposed installation.
- Do not use a metal ladder.
- Do not work on a wet or windy day.
- Do dress properly—wear shoes with rubber soles and heels, rubber gloves, and a long-sleeved shirt or jacket.
- If the assembly starts to drop, move away from it and let it fall. Because the antenna, mast, cable, and metal guy wires are all excellent conductors of electrical current, even the slightest touch of any of these parts to a power line completes an electrical path through the antenna and the installer.
- If any part of the antenna system should come in contact with a power line, do not touch it or try to remove it yourself. Call your local power company to have it removed safely.
- If an accident should occur with the power lines, call for qualified emergency help immediately.
- Assemble your new antenna on the ground or a level surface at the installation site.
- Connect its coaxial cable while you are on the ground and attach the antenna to the mast.
- Ensure that the mast does not fall as you raise or remove it. Use a durable non-conductive rope secured at each two foot level as the mast is raised. Have an assistant tend the rope, ready to pull the mast clear of any hazards (such as power lines) should it begin to fall.
- Use the mounting bracket provided with the antenna.
- If the installation will use guy wires:
    - Install guy anchor bolts.
    - Estimate the length of guy wire and cut it before raising the mast.
    - Attach guy wires to a mast using guy rings.
    - In the case of a guyed (tall, thin mast) installation, you must have at least one assistant to hold the mast upright while the guy wires are attached and tightened to the anchor bolts.
- Attach a “DANGER” label at eye level on the mast.
- Install ground rods to remove any static electricity buildup and connect a ground wire to the mast and ground rod. Use ground rods designed for that purpose, not a spare piece of pipe.

Unused Antenna Ports

Port plugs must be installed in any unused antenna ports.

The weatherproof caps on the connectors protect the router interior from environmental elements including water, heat, cold, and dust. They are installed on unused ports before the router is shipped.

When you install a new antenna in a port with an N-connector:

- Chassis-mounted antennas—Remove the weather proof cap before installing a chassis-mounted antenna.
- External antennas—Remove weatherproof cap, then connect the supported Cisco cable to the connector.

Guidelines to Achieving Optimal RF and Antenna Performance

Antennas are a critical component of a wireless communication system. Selecting a suitable antenna, an optimal antenna location, or antenna site is essential for optimum performance of a wireless links.

This section covers general tips for optimizing RF performance of indoor and outdoor terrestrial radio systems in the 400-7125 MHz frequency range. Examples of terrestrial radio systems include 4G LTE, 5G NR, Wi-Fi, LoRa, LR-WPAN and similar. In this context GPS SPS would not be considered a terrestrial system as the signal is received from space, not from another terrestrial site.

Because the antenna transmits and receives radio signals over the air, overall RF performance of the link is susceptible to RF obstructions and common sources of RF interference that can reduce throughput and range of the system.

Follow these guidelines to optimize performance. When in doubt, consult a qualified RF professional, and check with your solution partner for specific recommendations.

Antenna Model Selection and Performance

Consider the following when planning your installation:

- When selecting the antenna, ensure that it covers the frequency ranges or frequency bands of interest, and that it has good RF parameters such as antenna efficiency, VSWR and suitable radiation pattern for every frequency range that your application will use with this antenna.
- Antenna pattern is important. Omni-directional antennas have lower gain, but allow communicating to devices in all azimuth directions. Directional antennas concentrate the beam in a specific direction, making them ideal for point to point communication.
- When a system has multiple RF ports for receive and / or transmit, as is the case for 4G LTE , 5G NR or Wi-Fi, it is highly recommended to populate all the RF ports with suitable antennas to take advantage of MIMO, rather than rely on a single port or single antenna to save on cost. Please see the MIMO section for a detailed description of MIMO benefits.
- For RF systems that support multiple RF ports and multiple RF standards such as LTE, Wi-Fi, and GPS: consider using a multi-element antenna that integrates multiple antennas under the same radome (cover). Doing so may reduce cost compared to deploying and mounting a discrete single port antenna for every RF port.
- For communication between fixed infrastructure devices, such as mesh nodes or a point-to-point backhaul link, each device should have an antenna with the same polarization. If communicating with mobile devices that might be randomly oriented, consider dual-polarized antennas, such as those with both vertical and horizontal or slant +45° and -45° polarized elements.

Antenna Environmental Specifications

The selected antenna must have suitable mechanical and environmental specifications for the environment where it will be deployed. For example, shock and vibration specifications for transportation, corrosion resistant construction for marine and oil and gas industries, or IP (ingress protection) rating for outdoor deployment. Indoor antennas are typically not suitable for harsh industrial environments. Please check with your system integrator for environmental requirements for your application.

Antenna Accessories and Mounting

Consider the following when planning your installation:

- Carefully consider what type of other RF accessories, besides antenna, such as RF cables, lightning arrestors or RF adapters may be required in your installations. It is best to minimize long RF cable runs due to RF signal losses in the cable. Thinner RF cables have more RF loss , thicker cables are less flexible and more expensive.
- Carefully consider how the antenna will be physically mounted, as this may affect antenna selection. For example, a stud mount mechanical mounting design is a better fit for mounting on top of an electrical cabinet than a mast mount antenna.
- For outdoor deployments, follow installation instructions for the antenna. It is good practice to keep protective covers on the radio's RF ports and any antenna or accessory RF ports until the moment the interfaces are mated. This reduces chances of contamination, trapping water or condensation inside the connector, or accidental damage to RF interfaces.

MIMO Performance and Arrays

MIMO systems deliver benefits of higher SNR, higher reliability and higher throughput compared to single antenna systems. In more technical terms, MIMO delivers array gain, diversity gain and multiplexing gain compared to single antenna.

- Array gain — Improvement in SNR (signal to noise ratio) by coherently combining signals from multiple antennas. For example, increasing SNR through beamforming techniques.
- Diversity gain — Improvement in reliability by mitigating deep fading or strong destructive EM wave interference. For example, in a two-antenna system, if one antenna is experiencing deep fading due to an EM destructive null at its location at a given instant, the other antenna is unlikely to have a null at the same instant, and the combined SNR stays at a reliable level. In contrast, a single antenna would see SNR oscillating between good SNR and very poor SNR and reliability would degrade.
- Multiplexing gain — Increase in system capacity or throughput by sending independent data over multiple spatial streams simultaneously. The number of streams cannot be more than the number of antennas. For example, to support three spatial streams, a minimum of three antennas is required. Often there may be additional antennas for diversity or redundancy, such as in the case of 4x4:3, or 4x4 MIMO with 3 spatial streams.

If deploying multiple single-element antennas for a MIMO system in an array, ensure sufficient spacing between the antennas. Omnidirectional elements should generally be at least one wavelength apart at the lowest operating frequency.

Consider the following:

- For Wi-Fi systems operating in the 2.4, 5, and/or 6 GHz bands, space elements at least 5 inches (12.5 cm) apart.

- For 4G LTE and 5G systems with the lowest operating frequency of 617 MHz , space elements at least 20 inches (50 cm) apart.
- Note that spacing between elements inside multi-element MIMO antennas is often less than one wavelength. However multi-element antennas are engineered with MIMO performance in mind, by providing antenna diversity through pattern, polarization, and isolation between MIMO elements.

Antenna siting and location

Consider the following when planning your installation:

- Plan antenna location ahead of time. Ideal location for an antenna is in LOS (line of sight) of the counterpart that it is trying to communicate with. Under LOS conditions the signals propagate directly between the two communication nodes, without relying on signal bouncing off a wall or other structure to reach the counterpart. This is sometimes not possible to achieve in practice, but it is a useful goal to keep in mind when optimizing antenna location.
- While it is good to keep RF cables short, it is most desirable for an antenna to be in the best location it can be to provide the desired coverage.
- For large deployments involving multiple units communicating with each other across a complex urban or industrial landscape, consider running an RF propagation modeling study to predict approximate simulated coverage maps and determine initial placement of the units. A propagation study may help reduce overall deployment cost by discovering and mitigating issues with RF coverage before the infrastructure is physically installed.
- Keep the antenna away from metal obstructions such as heating and air-conditioning ducts, large ceiling trusses, building superstructures, and major power cabling runs. One exception is if the antenna is designed to be mounted on a ground plane. If mounting on a ground plane, mount the antenna on a flat metal surface away from adjacent obstructions.
- It is strongly recommended not to install antennas directly on the router or access point (AP), unless the router or AP is specifically engineered to directly mount the antennas. Products that are engineered for direct mounting of antennas specifically address each of the below issues.
- Reasons to mount antennas away from the router include:
  - Router location may not be optimal location for antenna to communicate with the counterpart wirelessly, so router and antenna may need to be in different locations.
  - Router may have a clutter of Ethernet cable and power cables around it, which will obstruct antenna signal.
  - A number of routers, such as the IR1835, are modular. They have plug-in RF modules for Wi-Fi , 4G LTE or 5G NR such as WP-WIFI6, P-LTEAP18-GL, P-5GS6-GL. These modules have RF connectors spaced close together, and while it is mechanically possible to install four or five antennas directly attached, this will result in significant degradation to RF performance of antennas due to mutual de-tuning between closely spaced antennas. It is strongly recommended to install antennas away from the chassis in modular cases.
- If installing an antenna indoors, consider that the density and electromagnetic properties of the materials used in the building construction determines the number of walls the signal can pass through and still maintain adequate coverage.
  - Paper and vinyl walls have very little effect on signal penetration.

- Solid and pre-cast concrete walls limit signal penetration to one or two walls without degrading coverage.
- Concrete and wood block walls limit signal penetration to three or four walls.
- A signal can penetrate five or six walls constructed of drywall or wood.
- A thick metal wall causes signals to reflect off, causing poor penetration.
- A chain link fence or wire mesh spaced between 1 and 1 1/2 in. (2.5 and 3.8 cm) acts as a harmonic reflector that blocks a 2.4-GHz radio signal.
- Install the antenna away from microwave ovens and 2-GHz cordless phones. These products can cause signal interference because they operate in the same frequency range as the device your antenna is connected to.

Installation Notes

The antenna is designed to mount on a dedicated mounting panel on the access point. No special tools are required.

The antenna is resistant to the full range of outdoor environments. Therefore, Cisco does not recommend using cable or antenna waterproofing materials. Using such materials may cause important drainage holes to be blocked. The antenna base has four drain holes.

There are also drain holes located under the cap at the top of the antenna. These holes allow proper drainage if the antenna is deployed with the cap pointing towards the ground.

Note Ensure that the cap is not damaged.

The following graphics show the location of the drain holes in both the antenna base (**2**) and under the antenna cap (**1**).

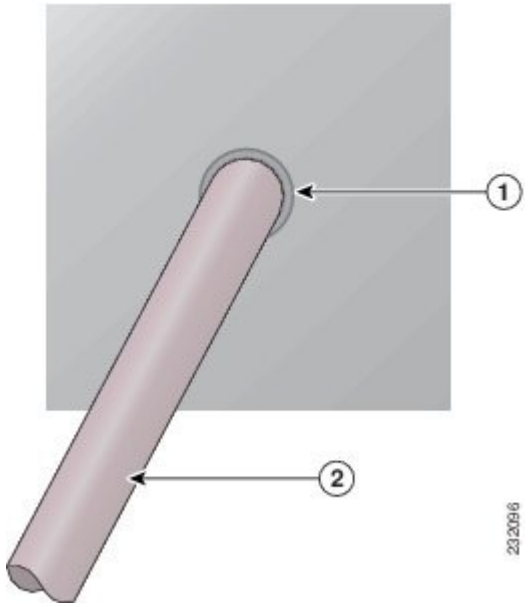

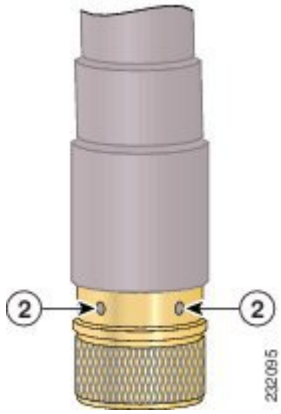

Choosing a Mounting Location

The antenna is designed to create an omni-directional broadcast pattern. To achieve this pattern, the access point should be mounted clear of any obstructions to the sides of the radiating element. If the mounting location is on the side of a building or tower, the antenna pattern is degraded on the building or tower side.

Generally, the higher an antenna is above the ground, the better it performs. Good practice is to install your antenna about 5 to 10 ft (1.5 to 3 m) above the roof line and away from all power lines and obstructions.

Tools and Equipment Required

No tools are needed to secure the antenna on the 2.4 GHz antenna mounting panel on the access point.

For information about the tools required to mount the access point, reference your access point documentation.

Mounting the Antenna

To mount the antenna on the access point, position the antenna below the antenna connector on the access point and thread it hand tight, as shown in the following figure.

Figure 91: Antenna Mounting

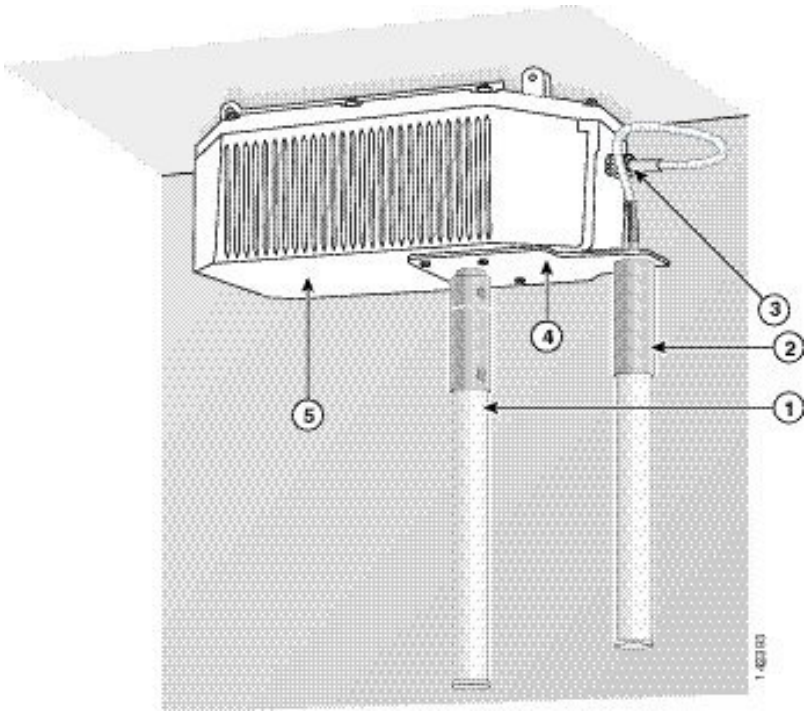

1	2.4-GHz antenna	4	Antenna mounting panel
2	5-GHz antenna	5	Access point
3	5-GHz antenna connector		

Communications, Services, and Additional Information

- To receive timely, relevant information from Cisco, sign up at Cisco Profile Manager.
- To get the business impact you're looking for with the technologies that matter, visit Cisco Services.
- To submit a service request, visit Cisco Support.
- To discover and browse secure, validated enterprise-class apps, products, solutions, and services, visit Cisco DevNet.
- To obtain general networking, training, and certification titles, visit Cisco Press.
- To find warranty information for a specific product or product family, access Cisco Warranty Finder.

Cisco Bug Search Tool

Cisco Bug Search Tool (BST) is a web-based tool that acts as a gateway to the Cisco bug tracking system that maintains a comprehensive list of defects and vulnerabilities in Cisco products and software. BST provides you with detailed defect information about your products and software.

Documentation Feedback

To provide feedback about Cisco technical documentation, use the feedback form available in the right pane of every online document.

Cisco Support Community

Cisco Support Community is a forum for you to ask and answer questions, share suggestions, and collaborate with your peers. Join the forum at https://supportforums.cisco.com/index.jspa.

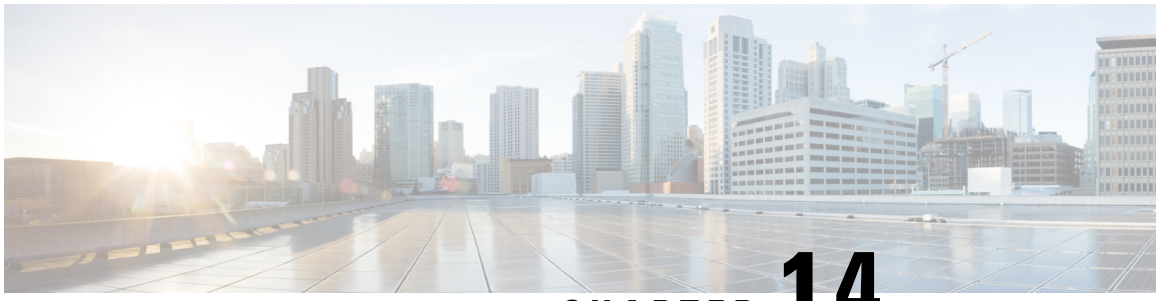

CHAPTER 14

Cisco Aironet Four-Port Dual-Band Polarization-Diverse Antenna (AIR-ANT2513P4M-N)

This chapter contains the following:

- Overview, on page 243
- Technical Specifications, on page 243
- System Requirements, on page 254
- General Safety Precautions, on page 254
- Guidelines to Achieving Optimal RF and Antenna Performance, on page 256
- Installing the Antenna, on page 259
- Communications, Services, and Additional Information, on page 265

Overview

This document describes the AIR-ANT2513P4M-N antenna and provides electrical specifications and mounting instructions. The antenna is a four-port polarization-diverse patch array that operates over the 2.4-GHz and 5-GHz Wi-Fi bands. It ships with an articulating mount for use on flat surfaces and masts and is adjustable in both the horizontal and vertical planes. The radome is paintable using commonly available non-conductive spray paints, such as Krylon or Rust-Oleum. The antenna is designed for use in indoor and outdoor environments with Cisco Aironet 3702P and 1570 series access points.

Technical Specifications

Antenna Type	**Dual-Band Polarization Diverse Patch Array**	
Operating Frequency Ranges	**2.4-2.5 GHz**	**5.15-5.925 GHz**
Nominal Input Impedance	50 Ohms	50 Ohms
VSWR	1.6:1	1.5:1 (above 5.7 GHz to 5.9 GHz) 2:1 (from 5.15 GHz to 5.7 GHz)

Antenna Type	Dual-Band Polarization Diverse Patch Array	
Peak Gain	13 dBi	13 dBi
Polarization (Ports A & C)	Vertical	Vertical
Polarization (Ports B & D)	Horizontal	Horizontal
Nominal Elevation Plane 3-dB Beamwidth	33 Degrees	27 Degrees
Nominal Azimuth Plane 3-dB Beamwidth	31 Degrees	31 Degrees
V-Pol Maximum Sidelobe Level	-15 dBc	-12 dBc
H-Pol Maximum Sidelobe Level	-10 dBc	-12 dBc
Front-to-Back Ratio	> 30 dB	> 30 dB
Connector Type	N-Female Bulkhead	
Length	14.5 in. (36.8 cm)	
Width	20 in. (50.7 cm)	
Height	0.8 in. (2.11 cm)	
Weight	81.1 oz. (2.3 kg)	
Water/Foreign Body Ingress	IP67	
Operational Wind	100 MPH	
Operating Temperature Range	-40° C to 85° C	

Figure 92: ANT2513P4M-N front high view



2.4 GHz Antenna Radiation Patterns

Figure 93: 2.4 GHz Ports AandC Azimuth Plane

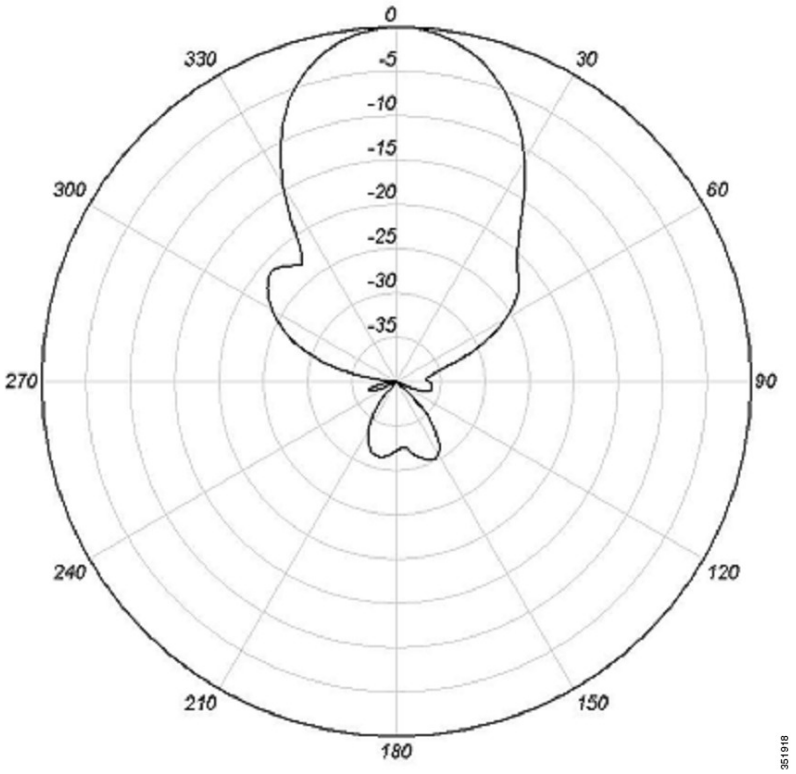

Figure 94: 2.4 GHz Ports AandC Elevation Plane

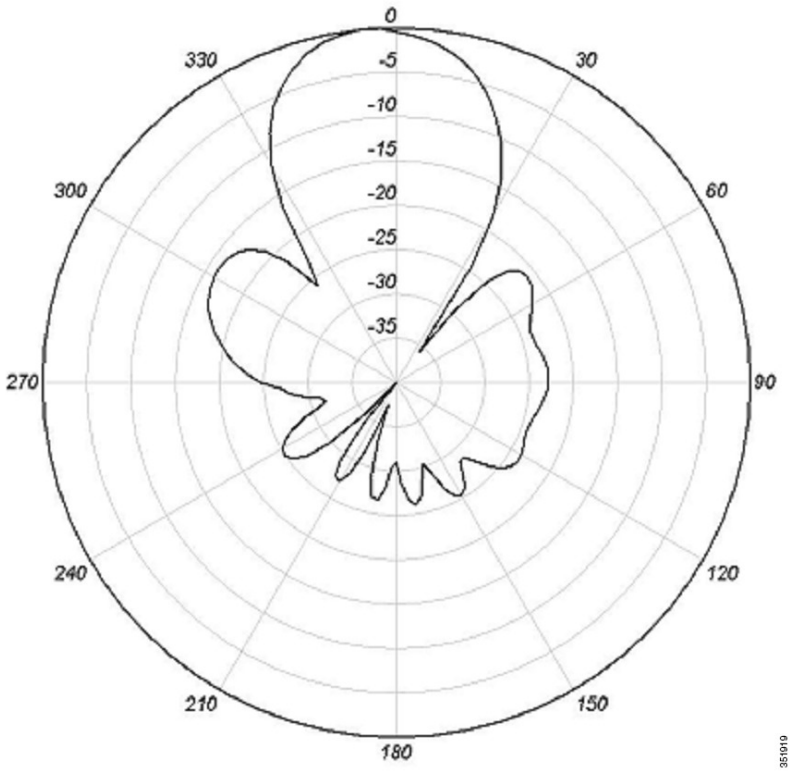

Figure 95: 2.4 GHz Ports BandD Azimuth Plane

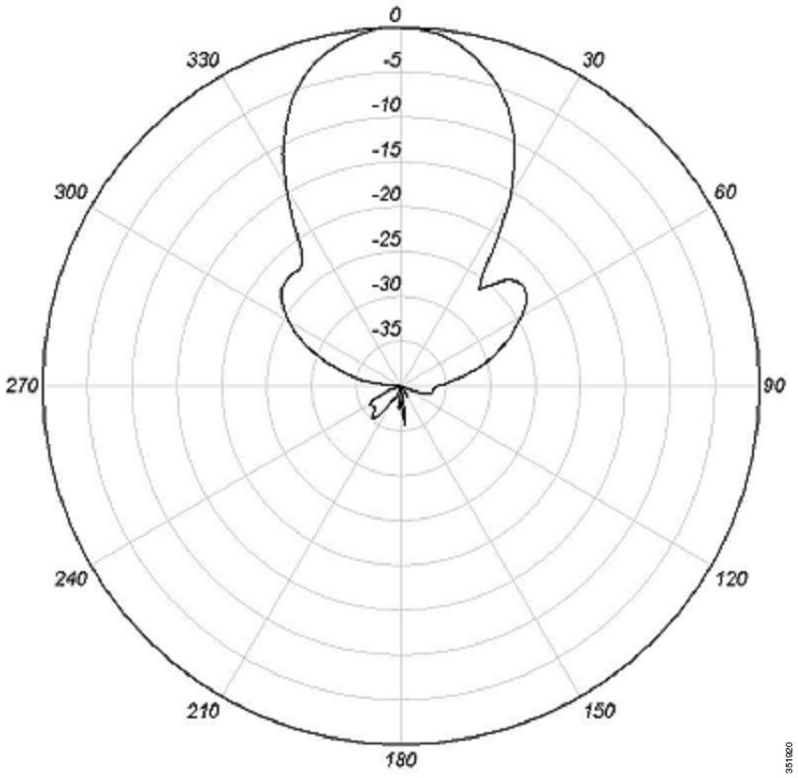

Figure 96: 2.4 GHz Ports BandD Elevation Plane

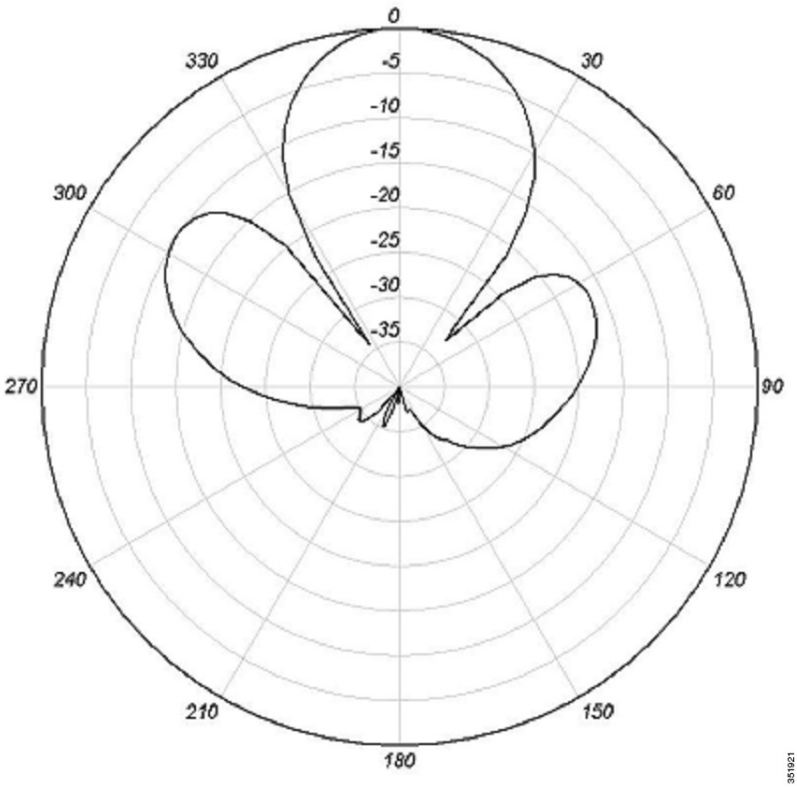

5 GHz Antenna Radiation Patterns

Figure 97: 5 GHz Ports AandC Azimuth Plane

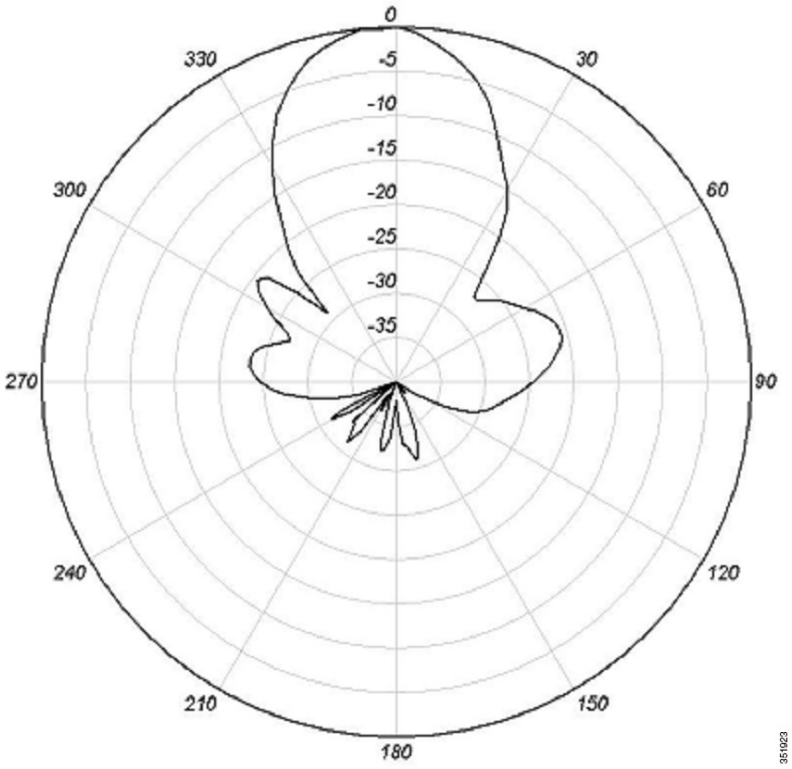

Figure 98: 5 GHz Ports AandC Elevation Plane

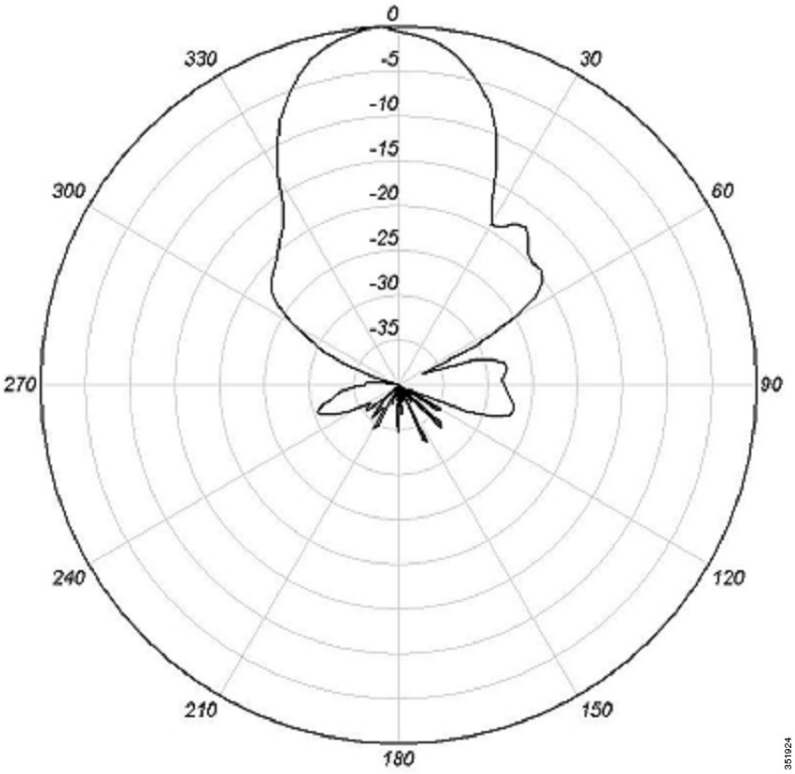

Figure 99: 5 GHz Ports BandD Azimuth Plane

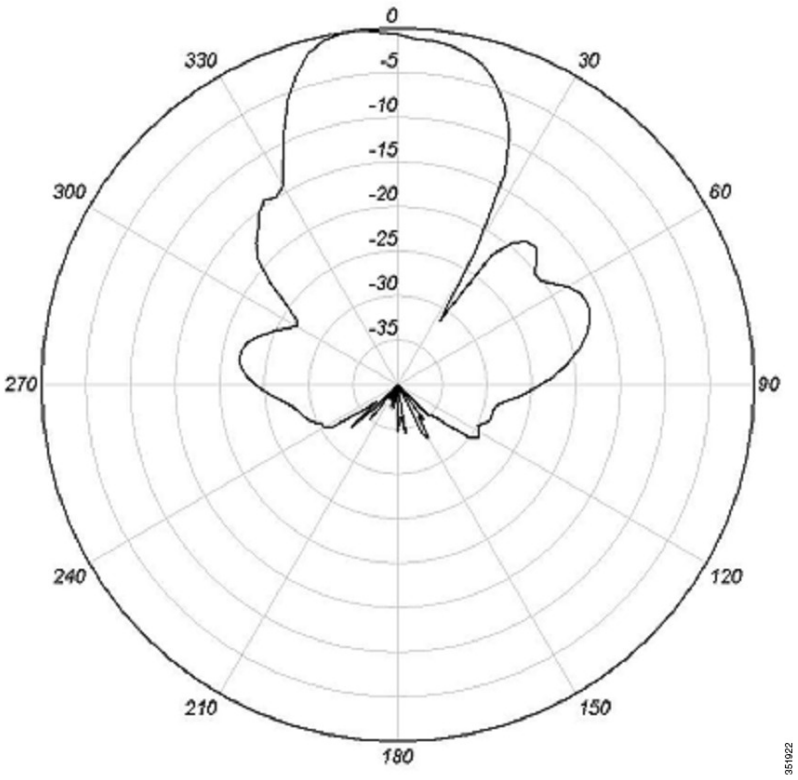

Figure 100: 5 GHz Ports BandD Elevation Plane

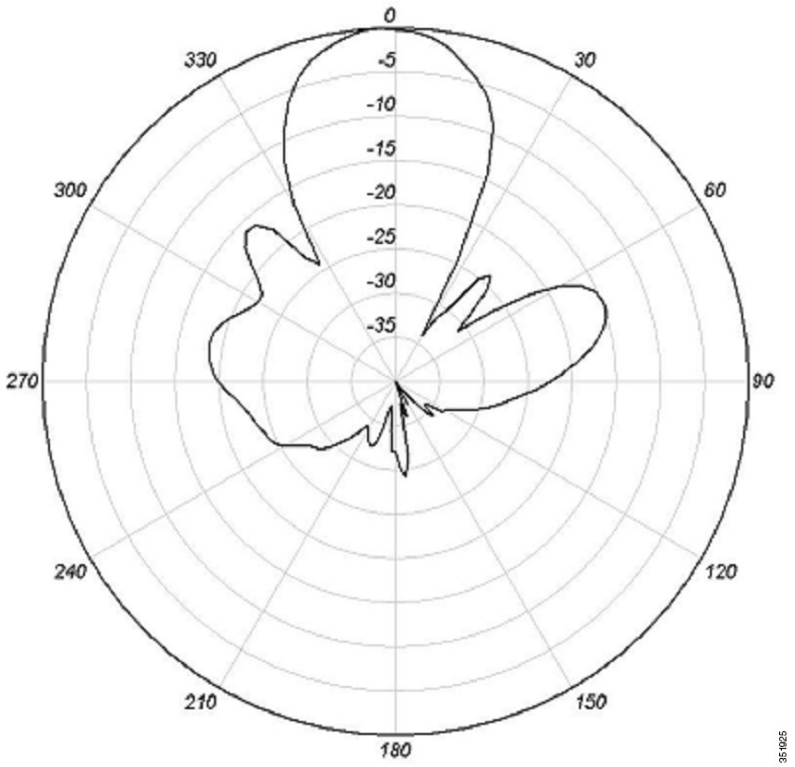

Antenna and Bracket Dimensions

The following figures show the overall dimensions of the antenna and bracket.

Figure 101: Antenna and Bracket Dimensions (in millimeters)

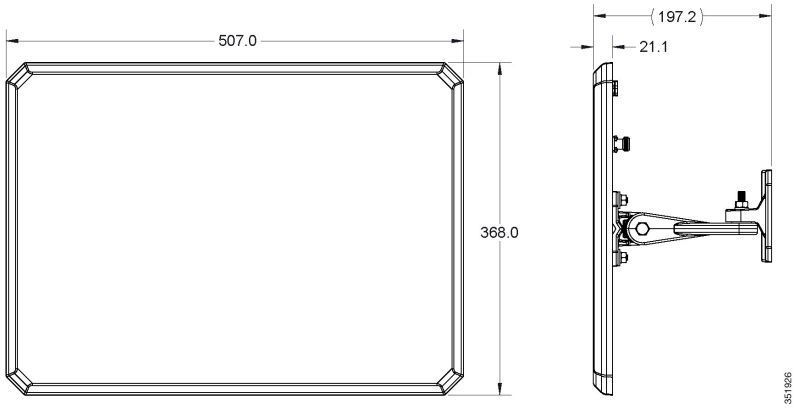

Figure 102: Rear View of Antenna (dimensions in millimeters)

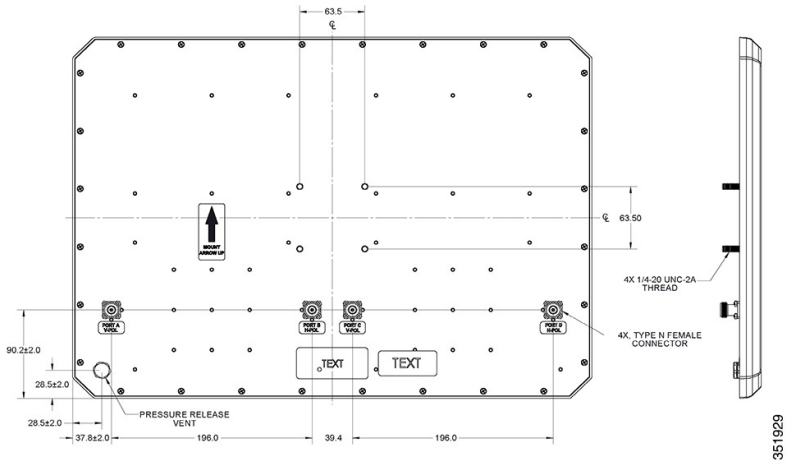

System Requirements

This antenna is designed for use with Cisco Aironet 3702P and 1570 series access points. The antenna can be mounted on a wall, a ceiling, or a pole with a maximum diameter of 5 inches (12.7 cm).

General Safety Precautions

Warning This warning symbol means danger. You are in a situation that could cause bodily injury. Before you work on any equipment, be aware of the hazards involved with electrical circuitry and be familiar with standard practices for preventing accidents. Use the statement number provided at the end of each warning to locate its translation in the translated safety warnings that accompanied this device. **Statement 1071**

Warning Do not work on the system or connect or disconnect cables during periods of lightning activity. **Statement 1001**

Warning Do not locate the outdoor antenna near overhead power lines or other electric light or power circuits, or where it can come into contact with such circuits. When installing the antenna, take extreme care not to come into contact with such circuits, as they may cause serious injury or death. For proper installation and grounding of the antenna, please refer to national and local codes (for example, U.S.:NFPA 70, National Electrical Code, Article 810, Canada:Canadian Electrical Code, Section 54). **Statement 1052**

Warning In order to comply with FCC radio frequency (RF) exposure limits, antennas should be located at a minimum of 7.9 inches (20 cm) or more from the body of all persons. **Statement 332**

Note For your safety, and to help you achieve a good installation, please read and follow these safety precautions.

Mast Mounted or Building Mounted Installations

The following instructions are common to most mast mounted or building mounted installations. For specific installation instructions for each antenna, see the antenna data-sheet and the router hardware installation guide.

- Find someone to help you—installing an antenna is often a two-person job.
- Select your installation site with safety, as well as performance, in mind. Remember that electric power lines and phone lines look alike. For your safety, assume that any overhead line can kill you.
- Contact your electric power company. Tell them your plans and ask them to come look at your proposed installation.
- Do not use a metal ladder.
- Do not work on a wet or windy day.
- Do dress properly—wear shoes with rubber soles and heels, rubber gloves, and a long-sleeved shirt or jacket.
- If the assembly starts to drop, move away from it and let it fall. Because the antenna, mast, cable, and metal guy wires are all excellent conductors of electrical current, even the slightest touch of any of these parts to a power line completes an electrical path through the antenna and the installer.
- If any part of the antenna system should come in contact with a power line, do not touch it or try to remove it yourself. Call your local power company to have it removed safely.
- If an accident should occur with the power lines, call for qualified emergency help immediately.
- Assemble your new antenna on the ground or a level surface at the installation site.
- Connect its coaxial cable while you are on the ground and attach the antenna to the mast.
- Ensure that the mast does not fall as you raise or remove it. Use a durable non-conductive rope secured at each two foot level as the mast is raised. Have an assistant tend the rope, ready to pull the mast clear of any hazards (such as power lines) should it begin to fall.
- Use the mounting bracket provided with the antenna.
- If the installation will use guy wires:
  - Install guy anchor bolts.
  - Estimate the length of guy wire and cut it before raising the mast.
  - Attach guy wires to a mast using guy rings.
  - In the case of a guyed (tall, thin mast) installation, you must have at least one assistant to hold the mast upright while the guy wires are attached and tightened to the anchor bolts.

- Attach a “DANGER” label at eye level on the mast.
- Install ground rods to remove any static electricity buildup and connect a ground wire to the mast and ground rod. Use ground rods designed for that purpose, not a spare piece of pipe.

Unused Antenna Ports

Port plugs must be installed in any unused antenna ports.

The weatherproof caps on the connectors protect the router interior from environmental elements including water, heat, cold, and dust. They are installed on unused ports before the router is shipped.

When you install a new antenna in a port with an N-connector:

- Chassis-mounted antennas—Remove the weather proof cap before installing a chassis-mounted antenna.
- External antennas—Remove weatherproof cap, then connect the supported Cisco cable to the connector.

Guidelines to Achieving Optimal RF and Antenna Performance

Antennas are a critical component of a wireless communication system. Selecting a suitable antenna, an optimal antenna location, or antenna site is essential for optimum performance of a wireless links.

This section covers general tips for optimizing RF performance of indoor and outdoor terrestrial radio systems in the 400-7125 MHz frequency range. Examples of terrestrial radio systems include 4G LTE, 5G NR, Wi-Fi, LoRa, LR-WPAN and similar. In this context GPS SPS would not be considered a terrestrial system as the signal is received from space, not from another terrestrial site.

Because the antenna transmits and receives radio signals over the air, overall RF performance of the link is susceptible to RF obstructions and common sources of RF interference that can reduce throughput and range of the system.

Follow these guidelines to optimize performance. When in doubt, consult a qualified RF professional, and check with your solution partner for specific recommendations.

Antenna Model Selection and Performance

Consider the following when planning your installation:

- When selecting the antenna, ensure that it covers the frequency ranges or frequency bands of interest, and that it has good RF parameters such as antenna efficiency, VSWR and suitable radiation pattern for every frequency range that your application will use with this antenna.
- Antenna pattern is important. Omni-directional antennas have lower gain, but allow communicating to devices in all azimuth directions. Directional antennas concentrate the beam in a specific direction, making them ideal for point to point communication.
- When a system has multiple RF ports for receive and / or transmit, as is the case for 4G LTE , 5G NR or Wi-Fi, it is highly recommended to populate all the RF ports with suitable antennas to take advantage of MIMO, rather than rely on a single port or single antenna to save on cost. Please see the MIMO section for a detailed description of MIMO benefits.
- For RF systems that support multiple RF ports and multiple RF standards such as LTE, Wi-Fi, and GPS: consider using a multi-element antenna that integrates multiple antennas under the same radome (cover).

Doing so may reduce cost compared to deploying and mounting a discrete single port antenna for every RF port.

- For communication between fixed infrastructure devices, such as mesh nodes or a point-to-point backhaul link, each device should have an antenna with the same polarization. If communicating with mobile devices that might be randomly oriented, consider dual-polarized antennas, such as those with both vertical and horizontal or slant +45° and -45° polarized elements.

Antenna Environmental Specifications

The selected antenna must have suitable mechanical and environmental specifications for the environment where it will be deployed. For example, shock and vibration specifications for transportation, corrosion resistant construction for marine and oil and gas industries, or IP (ingress protection) rating for outdoor deployment. Indoor antennas are typically not suitable for harsh industrial environments. Please check with your system integrator for environmental requirements for your application.

Antenna Accessories and Mounting

Consider the following when planning your installation:

- Carefully consider what type of other RF accessories, besides antenna, such as RF cables, lightning arrestors or RF adapters may be required in your installations. It is best to minimize long RF cable runs due to RF signal losses in the cable. Thinner RF cables have more RF loss , thicker cables are less flexible and more expensive.
- Carefully consider how the antenna will be physically mounted, as this may affect antenna selection. For example, a stud mount mechanical mounting design is a better fit for mounting on top of an electrical cabinet than a mast mount antenna.
- For outdoor deployments, follow installation instructions for the antenna. It is good practice to keep protective covers on the radio's RF ports and any antenna or accessory RF ports until the moment the interfaces are mated. This reduces chances of contamination, trapping water or condensation inside the connector, or accidental damage to RF interfaces.

MIMO Performance and Arrays

MIMO systems deliver benefits of higher SNR, higher reliability and higher throughput compared to single antenna systems. In more technical terms, MIMO delivers array gain, diversity gain and multiplexing gain compared to single antenna.

- Array gain — Improvement in SNR (signal to noise ratio) by coherently combining signals from multiple antennas. For example, increasing SNR through beamforming techniques.
- Diversity gain — Improvement in reliability by mitigating deep fading or strong destructive EM wave interference. For example, in a two-antenna system, if one antenna is experiencing deep fading due to an EM destructive null at its location at a given instant, the other antenna is unlikely to have a null at the same instant, and the combined SNR stays at a reliable level. In contrast, a single antenna would see SNR oscillating between good SNR and very poor SNR and reliability would degrade.
- Multiplexing gain — Increase in system capacity or throughput by sending independent data over multiple spatial streams simultaneously. The number of streams cannot be more than the number of antennas. For example, to support three spatial streams, a minimum of three antennas is required. Often there may be additional antennas for diversity or redundancy, such as in the case of 4x4:3, or 4x4 MIMO with 3 spatial streams.

If deploying multiple single-element antennas for a MIMO system in an array, ensure sufficient spacing between the antennas. Omnidirectional elements should generally be at least one wavelength apart at the lowest operating frequency.

Consider the following:

- For Wi-Fi systems operating in the 2.4, 5, and/or 6 GHz bands, space elements at least 5 inches (12.5 cm) apart.
- For 4G LTE and 5G systems with the lowest operating frequency of 617 MHz , space elements at least 20 inches (50 cm) apart.
- Note that spacing between elements inside multi-element MIMO antennas is often less than one wavelength. However multi-element antennas are engineered with MIMO performance in mind, by providing antenna diversity through pattern, polarization, and isolation between MIMO elements.

Antenna siting and location

Consider the following when planning your installation:

- Plan antenna location ahead of time. Ideal location for an antenna is in LOS (line of sight) of the counterpart that it is trying to communicate with. Under LOS conditions the signals propagate directly between the two communication nodes, without relying on signal bouncing off a wall or other structure to reach the counterpart. This is sometimes not possible to achieve in practice, but it is a useful goal to keep in mind when optimizing antenna location.
- While it is good to keep RF cables short, it is most desirable for an antenna to be in the best location it can be to provide the desired coverage.
- For large deployments involving multiple units communicating with each other across a complex urban or industrial landscape, consider running an RF propagation modeling study to predict approximate simulated coverage maps and determine initial placement of the units. A propagation study may help reduce overall deployment cost by discovering and mitigating issues with RF coverage before the infrastructure is physically installed.
- Keep the antenna away from metal obstructions such as heating and air-conditioning ducts, large ceiling trusses, building superstructures, and major power cabling runs. One exception is if the antenna is designed to be mounted on a ground plane. If mounting on a ground plane, mount the antenna on a flat metal surface away from adjacent obstructions.
- It is strongly recommended not to install antennas directly on the router or access point (AP), unless the router or AP is specifically engineered to directly mount the antennas. Products that are engineered for direct mounting of antennas specifically address each of the below issues.
- Reasons to mount antennas away from the router include:
  - Router location may not be optimal location for antenna to communicate with the counterpart wirelessly, so router and antenna may need to be in different locations.
  - Router may have a clutter of Ethernet cable and power cables around it, which will obstruct antenna signal.
  - A number of routers, such as the IR1835, are modular. They have plug-in RF modules for Wi-Fi , 4G LTE or 5G NR such as WP-WIFI6, P-LTEAP18-GL, P-5GS6-GL. These modules have RF connectors spaced close together, and while it is mechanically possible to install four or five antennas directly attached, this will result in significant degradation to RF performance of antennas due to

mutual de-tuning between closely spaced antennas. It is strongly recommended to install antennas away from the chassis in modular cases.

- If installing an antenna indoors, consider that the density and electromagnetic properties of the materials used in the building construction determines the number of walls the signal can pass through and still maintain adequate coverage.
  - Paper and vinyl walls have very little effect on signal penetration.
  - Solid and pre-cast concrete walls limit signal penetration to one or two walls without degrading coverage.
  - Concrete and wood block walls limit signal penetration to three or four walls.
  - A signal can penetrate five or six walls constructed of drywall or wood.
  - A thick metal wall causes signals to reflect off, causing poor penetration.
  - A chain link fence or wire mesh spaced between 1 and 1 1/2 in. (2.5 and 3.8 cm) acts as a harmonic reflector that blocks a 2.4-GHz radio signal.
  - Install the antenna away from microwave ovens and 2-GHz cordless phones. These products can cause signal interference because they operate in the same frequency range as the device your antenna is connected to.

Installing the Antenna

You can install the antenna on any flat surface or on a pole with a minimum diameter of 2 inches (5.08 cm) and a maximum diameter of 5 inches (12.7 cm). The antenna and one mounting flange are connected together when shipped. When mounting the antenna you need to assemble the bracket hardware, connect the antenna and bracket to the mounting surface, and adjust the antenna orientation.

Contents of Antenna Bracket Kit

The following figure shows the parts included with the antenna bracket.

Figure 103: Antenna Bracket Kit Contents

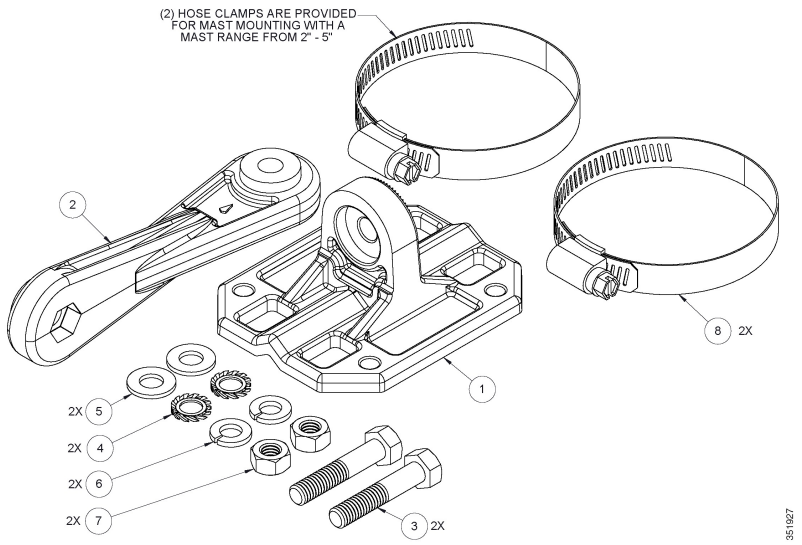

1	Mounting flange	5	Flat washers
2	Mounting arm	6	Lock washers
3	Arm attachment bolts (5/16-18 x 1-5/8")	7	Arm attachment nuts (5/16-18)
4	Serrated washers	8	Hose clamps (50 – 135 mm adjustment)

Note One flange (not pictured here) ships attached to the antenna. The flange pictured here is the one that you attach to the wall or the pole.

Tools and Equipment Required

You will need these tools to loosen and tighten the adjustment bolts on the bracket:

- A 1/2 in. (13-mm) wrench or socket

To mount the antenna on a wall or ceiling, you will need these supplies:

- Four mounting screws or bolts and wall anchors

Note The fasteners and mounting surface should be capable of maintaining a minimum pullout force of 150 pounds (68 kg) to support the weight of the antenna and bracket plus the potential wind loading on the antenna.

To mount the antenna on a pole or mast, you will need either or both of these supplies:

- Slotted screwdriver to tighten the screws on the hose clamps

- A 5/16 in. (8mm) socket or box wrench

Note The pole or mast must be rigid enough to hold the weight of the antenna plus the associated forces produced by wind loads. In addition, the pole or mast must be structurally strong enough to withstand the clamping force of the hose clamps

You may need the following tools and equipment, which are not provided:

- A drill and drill bit
- A pencil

Mounting on a Wall or Ceiling

Follow these steps to mount your antenna on a wall or ceiling.

Step 1 Remove the antenna and bracket hardware from the shipping container.

Step 2 Determine the mounting location for the antenna.

Note The fasteners and mounting surface should be capable of maintaining a minimum pullout force of 150 pounds (68 kg) to support the weight of the antenna plus the potential wind loading on the antenna.

Step 3 Attach the mounting bracket to the wall or ceiling using four screws or bolts and anchors through the holes on the bracket. The following figure shows the wall-mount bracket.

Figure 104: Wall-Mount Bracket and Dimensions (in millimeters)

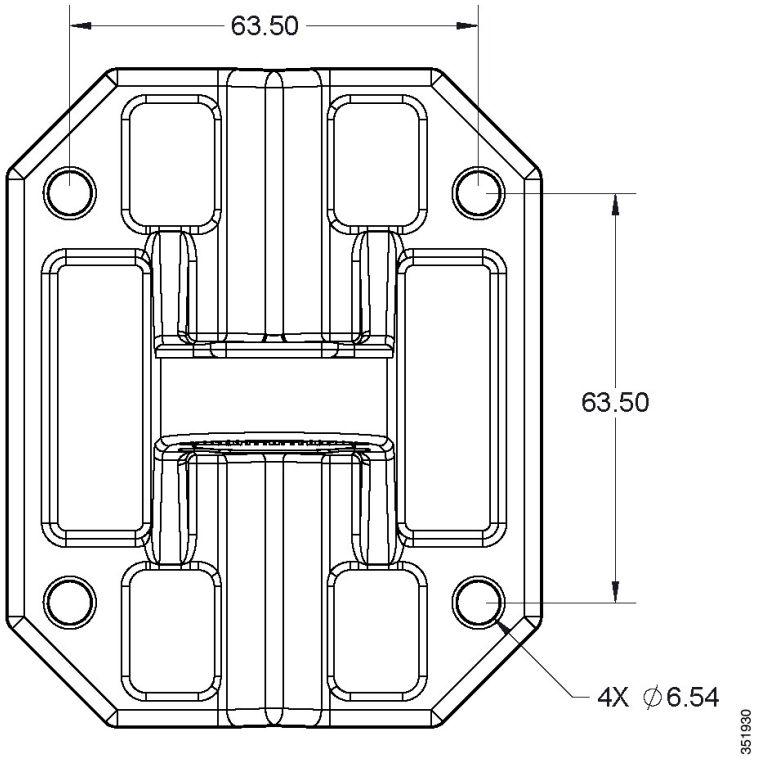

Step 4 Assemble the bracket hardware as shown in the following figure.

Figure 105: Assembling the Bracket Hardware

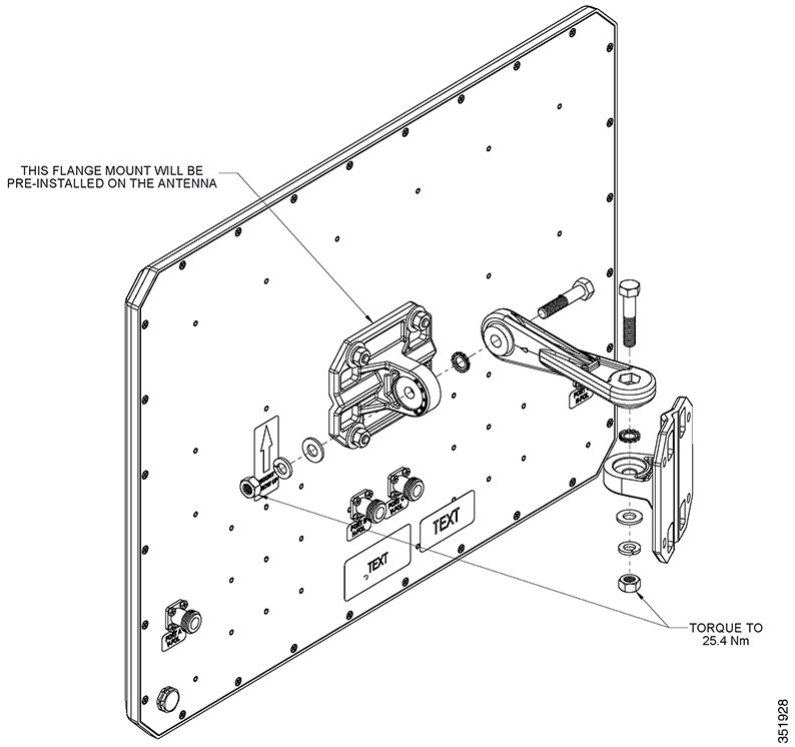

Step 5 Make sure you orient the antenna correctly (note the arrow on the back of the antenna that indicates the top of the antenna). Use a 1/2 in. (13-mm) wrench to loosen the elevation adjustment bolt and the elevation pivot bolt.

Step 6 Adjust the azimuth (side-to-side position) and elevation (up-and-down position) of the antenna. Loosen the adjustment bolts slightly to allow for adjustment. Azimuth angle can be adjusted ±25 degrees and elevation can be adjusted ±60 degrees. You can use the azimuth and elevation markings on the mounting arm and the wall flange as a guide.

Step 7 After you adjust the antenna position, tighten the adjustment bolts and the pivot bolts. Tighten all bolts to 18.7 +/- 5 lb-ft (25.4 Nm).

Step 8 Connect the antenna cables to the access point. The antenna ports are labeled A through D, from left to right.

- On the AP3702P, connect the antenna port A to connector A on the access point, antenna port B to connector B, and so on.
- On the AP1570, connect antenna port A to Port 1 on the AP, antenna port B to port 2 on the AP, and so on.

What to do next

See the Suggested Cable section for cable recommendations.

Mounting on a Pole or Mast

The antenna can be mounted on a pole or mast using two hose clamps.

Note The pole or mast must be rigid enough to hold the weight of the antenna plus the associated forces produced by wind loads. In addition, the mast must be structurally strong enough to withstand the clamping force of the hose clamps.

Step 1 Follow steps 1 and 2 from the Mounting on a Wall or Ceiling section.

Step 2 Position and mount the mounting flange (see Antenna Bracket Kit Contents) onto the pole or mast using the hose clamps provided in the kit. The hose clamps should pass through the slots on the mounting flange (see Wall-Mount Bracket and Dimensions (in millimeters).

Step 3 Tighten the clamps only enough to hold the flange and antenna in place until the antenna is positioned to its final position.

Step 4 Assemble the antenna and bracket to the flange as shown in Figure 6.

Step 5 Position the antenna, mounting bracket, and hose clamps on the mast.

Step 6 Tighten the hose clamps until the antenna is fully secure on the mast. Ensure that the antenna cannot rotate about the mast.

Step 7 After the antenna is secured on the mast, adjust the azimuth and elevation.

To adjust the azimuth and elevation, use a 1/2 in. (13-mm) wrench to loosen the adjustment bolts. Azimuth can be adjusted ±25 degrees and elevation can be adjusted ±60 degrees.

Step 8 After you adjust the antenna position, tighten the adjustment bolts. Tighten all bolts to 18.7 +/- 5 lb-ft (25.4 Nm).

Step 9 Connect the antenna cables to the access point. The antenna ports are labeled A through D, from left to right. Connect the antenna port A to connector A on the access point, antenna port B to connector B on the access point, and so on.

What to do next

See the Suggested Cable section for cable recommendations.

Suggested Cable

Cisco recommends a high-quality, low-loss cable for use with the antenna, such as Cisco AIR-CAB005LL-R-N= (5 foot low-loss cable with RP-TNC and N-type connectors) for AP3702P, or AIR-CAB005LL-N= or AIR-CAB010LL-N= (5 foot and 10 foot N-type connectors, respectively) for AP1570.

Four cables are required.

Note Coaxial cable loses efficiency as the frequency increases, resulting in signal loss. The cable should be kept as short as possible because cable length also determines the amount of signal loss (the longer the run, the greater the loss)

Painting the Antenna

Painting the antenna and the bracket does not affect its performance if you use standard exterior-grade, oil-based or latex paint. Do not use metallic or metallic-flake paints, which will degrade antenna performance.

Note Before painting the antenna, cover the pressure-release vent on the rear, lower-left of the antenna with masking tape to prevent clogging.

Cisco recommends Krylon Fusion for Plastic or Rust-Oleum for Plastic (which might require a primer coat). For best results, follow the surface preparation suggestions from the paint manufacturer.

Communications, Services, and Additional Information

- To receive timely, relevant information from Cisco, sign up at Cisco Profile Manager.
- To get the business impact you're looking for with the technologies that matter, visit Cisco Services.
- To submit a service request, visit Cisco Support.
- To discover and browse secure, validated enterprise-class apps, products, solutions, and services, visit Cisco DevNet.
- To obtain general networking, training, and certification titles, visit Cisco Press.
- To find warranty information for a specific product or product family, access Cisco Warranty Finder.

Cisco Bug Search Tool

Cisco Bug Search Tool (BST) is a web-based tool that acts as a gateway to the Cisco bug tracking system that maintains a comprehensive list of defects and vulnerabilities in Cisco products and software. BST provides you with detailed defect information about your products and software.

Documentation Feedback

To provide feedback about Cisco technical documentation, use the feedback form available in the right pane of every online document.

Cisco Support Community

Cisco Support Community is a forum for you to ask and answer questions, share suggestions, and collaborate with your peers. Join the forum at https://supportforums.cisco.com/index.jspa.

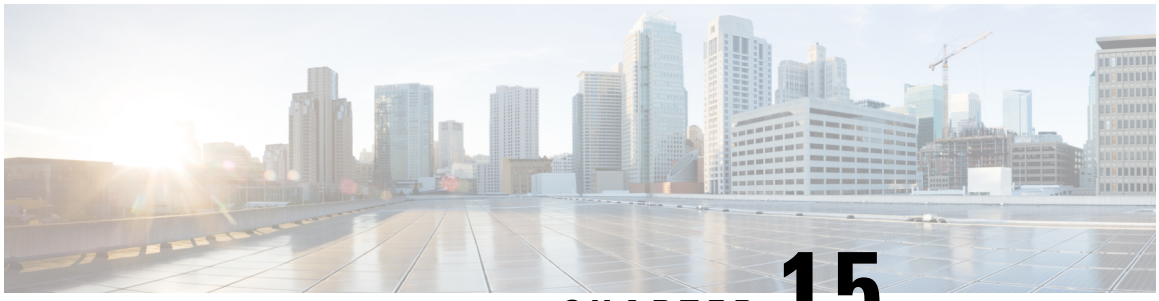

CHAPTER 15

Cisco Aironet Four-Element, MIMO, Dual-Band Ceiling Mount Omni-Directional Antenna (AIR-ANT2524V4C-R)

This chapter contains the following:

- Overview, on page 267
- Technical Specifications, on page 268
- System Requirements, on page 276
- General Safety Precautions, on page 276
- Guidelines to Achieving Optimal RF and Antenna Performance, on page 278
- Choosing a Mounting Location, on page 281
- Installing the Antenna, on page 281
- Communications, Services, and Additional Information, on page 284

Overview

This section describes the AIR-ANT2524V4C-R antenna, and provides specifications and mounting instructions. The antenna is a four-element, MIMO, dual-band antenna that operates in the 2.4 and 5 GHz frequency ranges. The antenna is designed for ceiling-mounting in an indoor environment.



Technical Specifications

Antenna type	4-Element, Dual-band, Low Profile Omni
Operating frequency ranges	2400–2484 MHz5150–5850 MHz
VSWR	2:1 or less in both bands
Peak gain	2.4-GHz band: 2 dBi5-GHz band: 4 dBi
Polarization	Linear
Azimuth plane 3 dB beamwidth	Omni-directional
Elevation plane 3 dB beamwidth	2.4 GHz band: 69°5 GHz band: 60°
Length	7.25 in (18.4 cm)
Width	7.25 in (18.4 cm)
Depth	1 in (2.5 cm)
Weight	1.3 lb (0.59 kg)
Cable	3 foot (91.4 cm) plenum rated, UV stable
Connector	RP-TNC

Antenna type	4-Element, Dual-band, Low Profile Omni
Environment	Indoor
Temperature range	32–133°F(0–56°C)

Radiation Patterns

Figure 106: 2.4 GHz Element 1 Azimuth and Elevation Plane Patterns

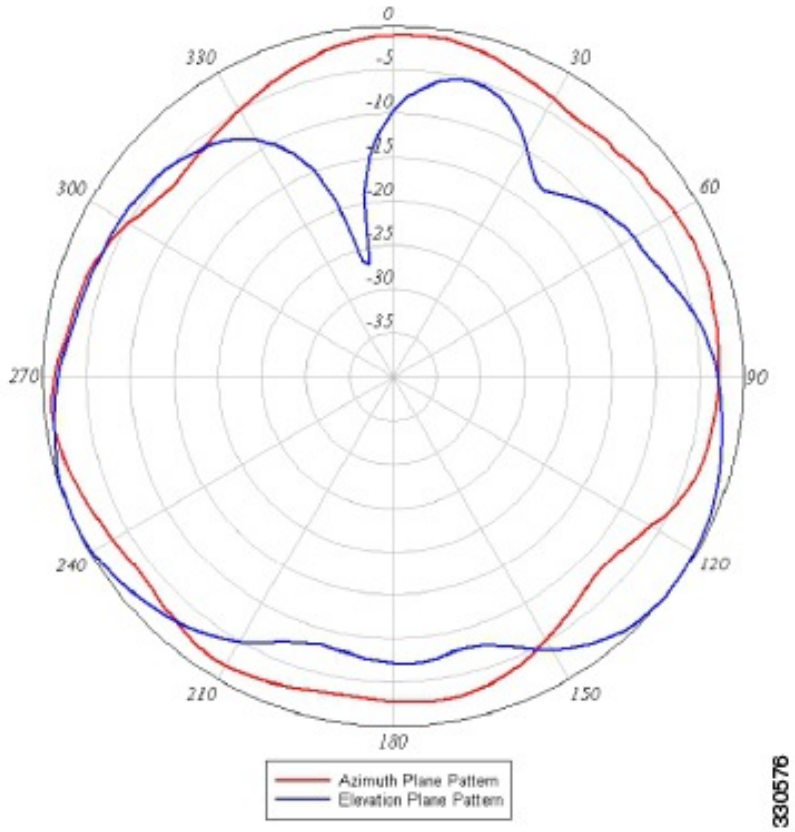

Figure 107: 5 GHz Element 1 Azimuth and Elevation Plane Patterns

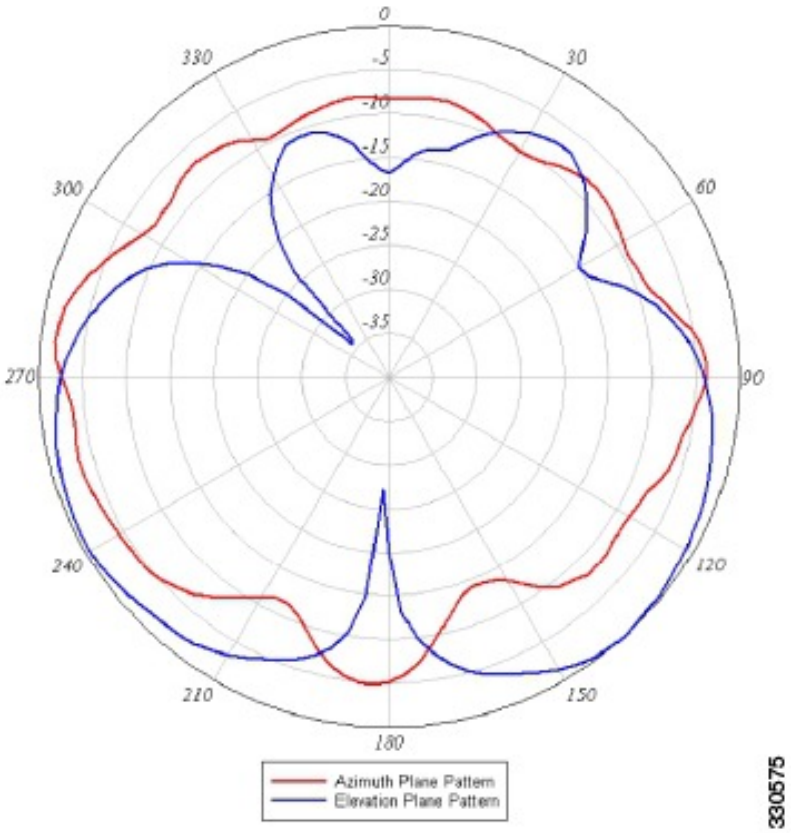

Figure 108: 2.4 GHz Element 2 Azimuth and Elevation Plane Patterns

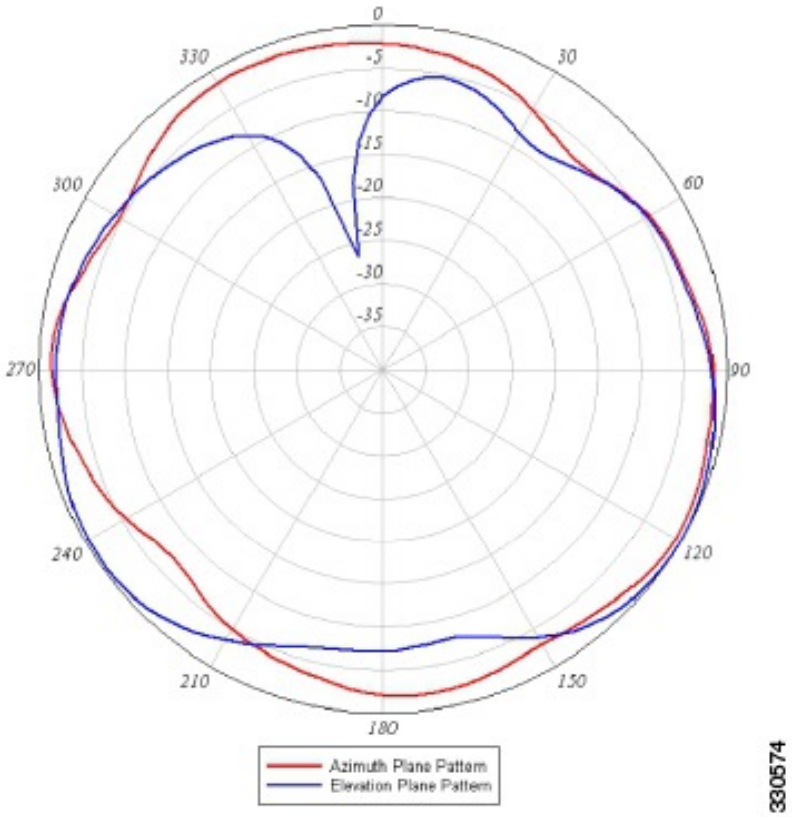

Figure 109: 5 GHz Element 2 Azimuth and Elevation Plane Patterns

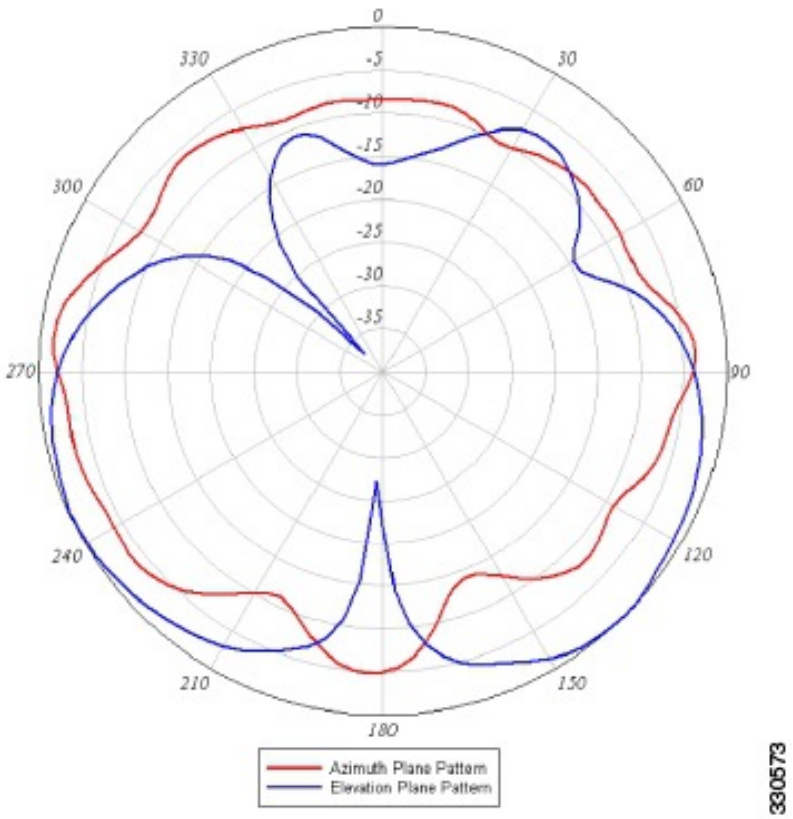

Figure 110: 2.4 GHz Element 3 Azimuth and Elevation Plane Patterns

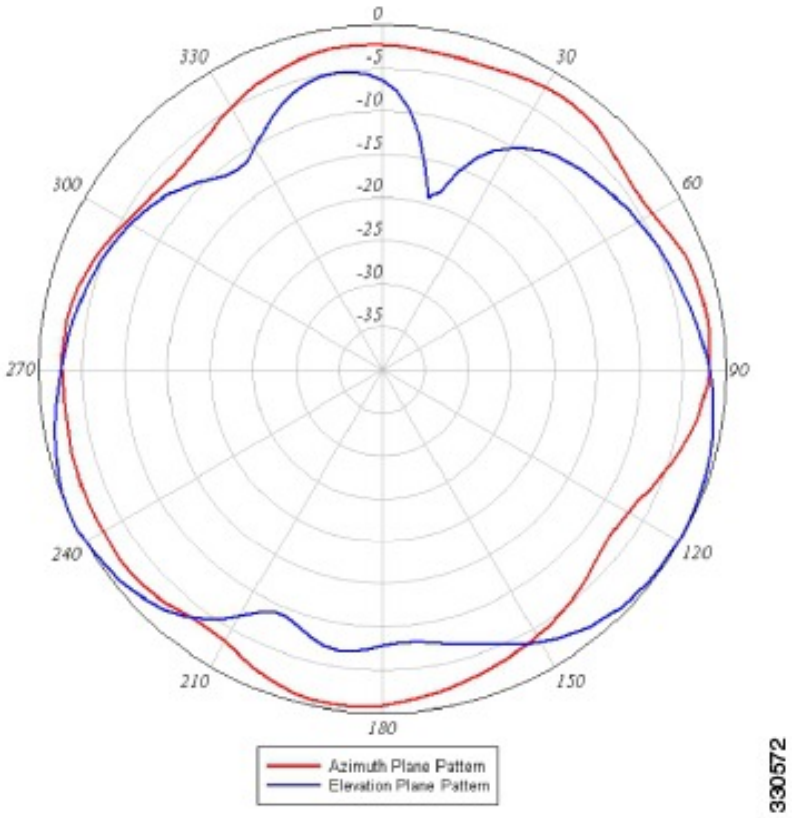

Figure 111: 5 GHz Element 3 Azimuth and Elevation Plane Patterns

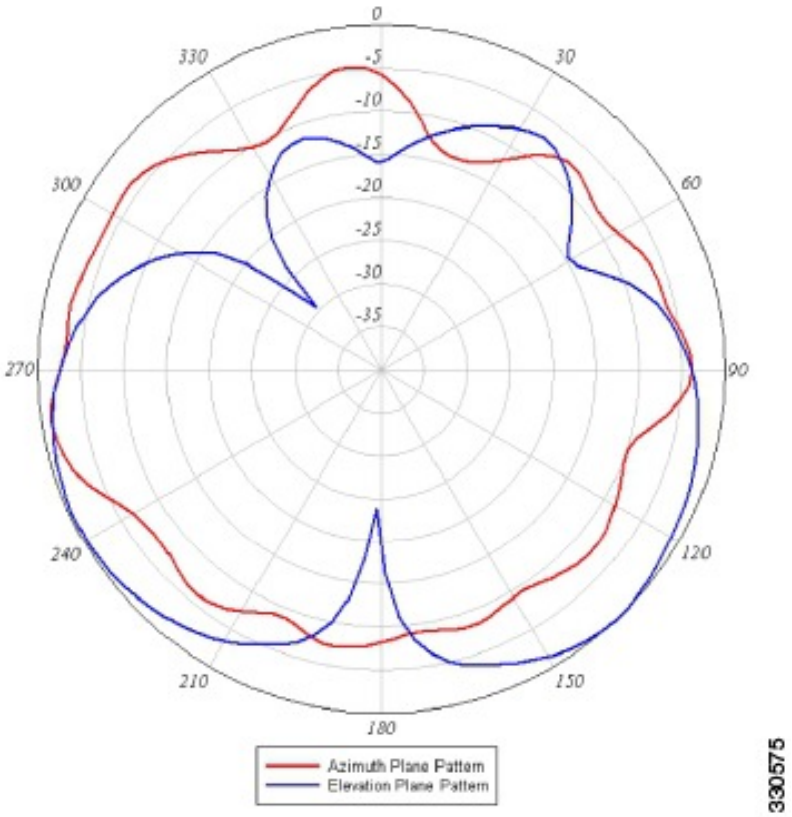

Figure 112: 2.4 GHz Element 4 Azimuth and Elevation Plane Patterns

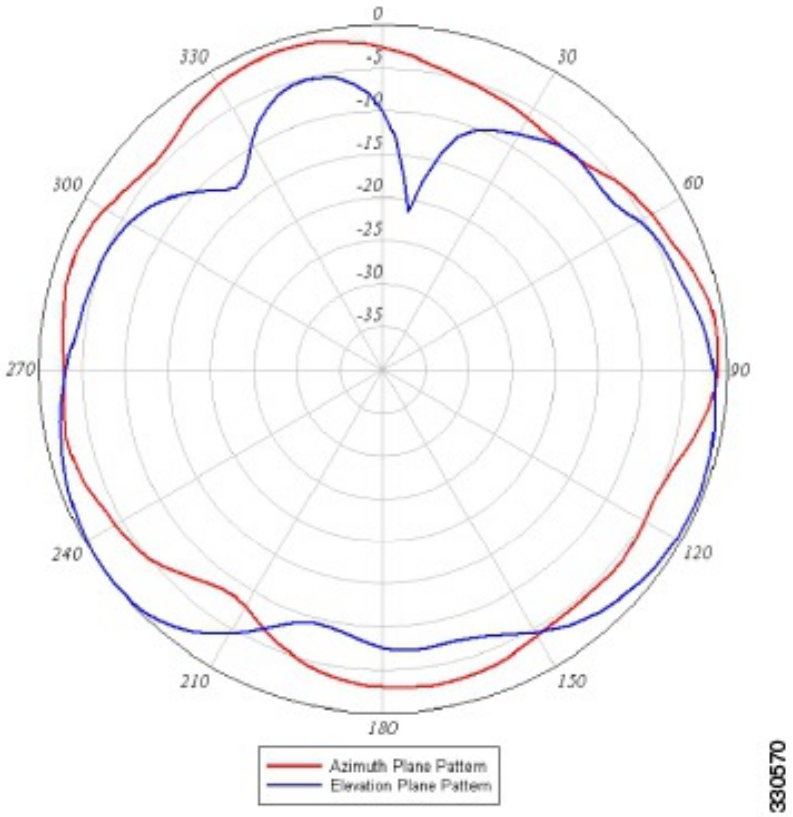

Figure 113: 5 GHz Element 4 Azimuth and Elevation Plane Patterns

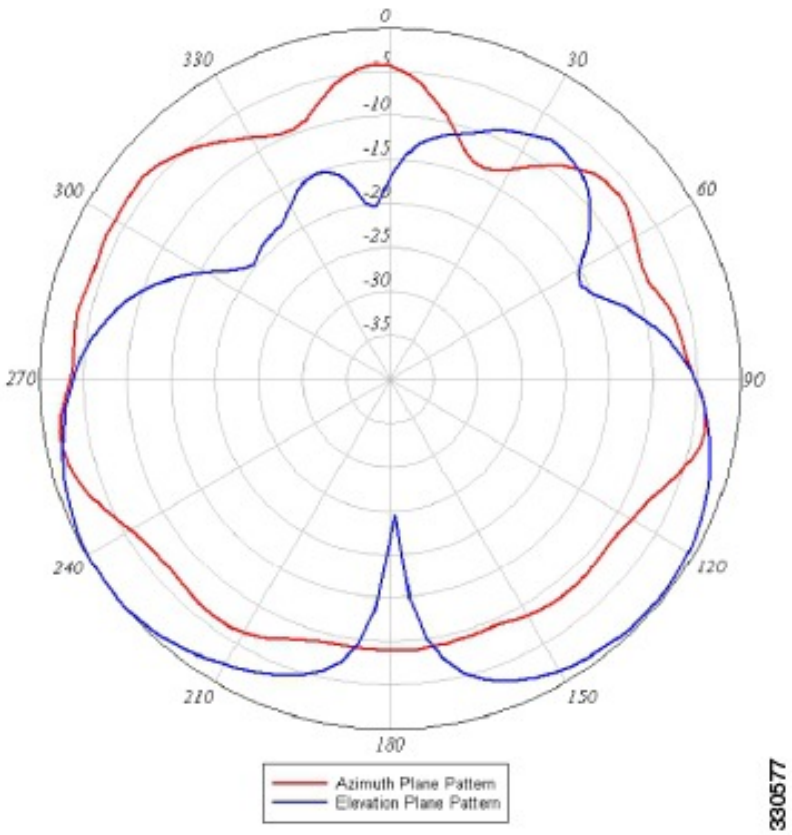

System Requirements

This antenna is for indoor use with any Cisco Aironet radio device with dual-band (2.4 and 5 GHz) RP-TNC antenna ports. The antenna can be mounted on suspended ceiling tiles having a thickness between ½ in. (1.27 cm) and 1 in. (2.54 cm).

General Safety Precautions

Warning This warning symbol means danger. You are in a situation that could cause bodily injury. Before you work on any equipment, be aware of the hazards involved with electrical circuitry and be familiar with standard practices for preventing accidents. Use the statement number provided at the end of each warning to locate its translation in the translated safety warnings that accompanied this device. **Statement 1071**

Warning Do not work on the system or connect or disconnect cables during periods of lightning activity. **Statement 1001**

Warning Do not locate the outdoor antenna near overhead power lines or other electric light or power circuits, or where it can come into contact with such circuits. When installing the antenna, take extreme care not to come into contact with such circuits, as they may cause serious injury or death. For proper installation and grounding of the antenna, please refer to national and local codes (for example, U.S.:NFPA 70, National Electrical Code, Article 810, Canada:Canadian Electrical Code, Section 54). **Statement 1052**

Warning In order to comply with FCC radio frequency (RF) exposure limits, antennas should be located at a minimum of 7.9 inches (20 cm) or more from the body of all persons. **Statement 332**

Note For your safety, and to help you achieve a good installation, please read and follow these safety precautions.

Mast Mounted or Building Mounted Installations

The following instructions are common to most mast mounted or building mounted installations. For specific installation instructions for each antenna, see the antenna data-sheet and the router hardware installation guide.

- Find someone to help you—installing an antenna is often a two-person job.
- Select your installation site with safety, as well as performance, in mind. Remember that electric power lines and phone lines look alike. For your safety, assume that any overhead line can kill you.
- Contact your electric power company. Tell them your plans and ask them to come look at your proposed installation.
- Do not use a metal ladder.
- Do not work on a wet or windy day.
- Do dress properly—wear shoes with rubber soles and heels, rubber gloves, and a long-sleeved shirt or jacket.
- If the assembly starts to drop, move away from it and let it fall. Because the antenna, mast, cable, and metal guy wires are all excellent conductors of electrical current, even the slightest touch of any of these parts to a power line completes an electrical path through the antenna and the installer.
- If any part of the antenna system should come in contact with a power line, do not touch it or try to remove it yourself. Call your local power company to have it removed safely.
- If an accident should occur with the power lines, call for qualified emergency help immediately.
- Assemble your new antenna on the ground or a level surface at the installation site.
- Connect its coaxial cable while you are on the ground and attach the antenna to the mast.
- Ensure that the mast does not fall as you raise or remove it. Use a durable non-conductive rope secured at each two foot level as the mast is raised. Have an assistant tend the rope, ready to pull the mast clear of any hazards (such as power lines) should it begin to fall.
- Use the mounting bracket provided with the antenna.

- If the installation will use guy wires:
  - Install guy anchor bolts.
  - Estimate the length of guy wire and cut it before raising the mast.
  - Attach guy wires to a mast using guy rings.
  - In the case of a guyed (tall, thin mast) installation, you must have at least one assistant to hold the mast upright while the guy wires are attached and tightened to the anchor bolts.
- Attach a “DANGER” label at eye level on the mast.
- Install ground rods to remove any static electricity buildup and connect a ground wire to the mast and ground rod. Use ground rods designed for that purpose, not a spare piece of pipe.

Unused Antenna Ports

Port plugs must be installed in any unused antenna ports.

The weatherproof caps on the connectors protect the router interior from environmental elements including water, heat, cold, and dust. They are installed on unused ports before the router is shipped.

When you install a new antenna in a port with an N-connector:

- Chassis-mounted antennas—Remove the weather proof cap before installing a chassis-mounted antenna.
- External antennas—Remove weatherproof cap, then connect the supported Cisco cable to the connector.

Guidelines to Achieving Optimal RF and Antenna Performance

Antennas are a critical component of a wireless communication system. Selecting a suitable antenna, an optimal antenna location, or antenna site is essential for optimum performance of a wireless links.

This section covers general tips for optimizing RF performance of indoor and outdoor terrestrial radio systems in the 400-7125 MHz frequency range. Examples of terrestrial radio systems include 4G LTE, 5G NR, Wi-Fi, LoRa, LR-WPAN and similar. In this context GPS SPS would not be considered a terrestrial system as the signal is received from space, not from another terrestrial site.

Because the antenna transmits and receives radio signals over the air, overall RF performance of the link is susceptible to RF obstructions and common sources of RF interference that can reduce throughput and range of the system.

Follow these guidelines to optimize performance. When in doubt, consult a qualified RF professional, and check with your solution partner for specific recommendations.

Antenna Model Selection and Performance

Consider the following when planning your installation:

- When selecting the antenna, ensure that it covers the frequency ranges or frequency bands of interest, and that it has good RF parameters such as antenna efficiency, VSWR and suitable radiation pattern for every frequency range that your application will use with this antenna.

- Antenna pattern is important. Omni-directional antennas have lower gain, but allow communicating to devices in all azimuth directions. Directional antennas concentrate the beam in a specific direction, making them ideal for point to point communication.
- When a system has multiple RF ports for receive and / or transmit, as is the case for 4G LTE , 5G NR or Wi-Fi, it is highly recommended to populate all the RF ports with suitable antennas to take advantage of MIMO, rather than rely on a single port or single antenna to save on cost. Please see the MIMO section for a detailed description of MIMO benefits.
- For RF systems that support multiple RF ports and multiple RF standards such as LTE, Wi-Fi, and GPS: consider using a multi-element antenna that integrates multiple antennas under the same radome (cover). Doing so may reduce cost compared to deploying and mounting a discrete single port antenna for every RF port.
- For communication between fixed infrastructure devices, such as mesh nodes or a point-to-point backhaul link, each device should have an antenna with the same polarization. If communicating with mobile devices that might be randomly oriented, consider dual-polarized antennas, such as those with both vertical and horizontal or slant +45° and -45° polarized elements.

Antenna Environmental Specifications

The selected antenna must have suitable mechanical and environmental specifications for the environment where it will be deployed. For example, shock and vibration specifications for transportation, corrosion resistant construction for marine and oil and gas industries, or IP (ingress protection) rating for outdoor deployment. Indoor antennas are typically not suitable for harsh industrial environments. Please check with your system integrator for environmental requirements for your application.

Antenna Accessories and Mounting

Consider the following when planning your installation:

- Carefully consider what type of other RF accessories, besides antenna, such as RF cables, lightning arrestors or RF adapters may be required in your installations. It is best to minimize long RF cable runs due to RF signal losses in the cable. Thinner RF cables have more RF loss , thicker cables are less flexible and more expensive.
- Carefully consider how the antenna will be physically mounted, as this may affect antenna selection. For example, a stud mount mechanical mounting design is a better fit for mounting on top of an electrical cabinet than a mast mount antenna.
- For outdoor deployments, follow installation instructions for the antenna. It is good practice to keep protective covers on the radio’s RF ports and any antenna or accessory RF ports until the moment the interfaces are mated. This reduces chances of contamination, trapping water or condensation inside the connector, or accidental damage to RF interfaces.

MIMO Performance and Arrays

MIMO systems deliver benefits of higher SNR, higher reliability and higher throughput compared to single antenna systems. In more technical terms, MIMO delivers array gain, diversity gain and multiplexing gain compared to single antenna.

- Array gain — Improvement in SNR (signal to noise ratio) by coherently combining signals from multiple antennas. For example, increasing SNR through beamforming techniques.

- Diversity gain — Improvement in reliability by mitigating deep fading or strong destructive EM wave interference. For example, in a two-antenna system, if one antenna is experiencing deep fading due to an EM destructive null at its location at a given instant, the other antenna is unlikely to have a null at the same instant, and the combined SNR stays at a reliable level. In contrast, a single antenna would see SNR oscillating between good SNR and very poor SNR and reliability would degrade.
- Multiplexing gain — Increase in system capacity or throughput by sending independent data over multiple spatial streams simultaneously. The number of streams cannot be more than the number of antennas. For example, to support three spatial streams, a minimum of three antennas is required. Often there may be additional antennas for diversity or redundancy, such as in the case of 4x4:3, or 4x4 MIMO with 3 spatial streams.

If deploying multiple single-element antennas for a MIMO system in an array, ensure sufficient spacing between the antennas. Omnidirectional elements should generally be at least one wavelength apart at the lowest operating frequency.

Consider the following:

- For Wi-Fi systems operating in the 2.4, 5, and/or 6 GHz bands, space elements at least 5 inches (12.5 cm) apart.
- For 4G LTE and 5G systems with the lowest operating frequency of 617 MHz , space elements at least 20 inches (50 cm) apart.
- Note that spacing between elements inside multi-element MIMO antennas is often less than one wavelength. However multi-element antennas are engineered with MIMO performance in mind, by providing antenna diversity through pattern, polarization, and isolation between MIMO elements.

Antenna siting and location

Consider the following when planning your installation:

- Plan antenna location ahead of time. Ideal location for an antenna is in LOS (line of sight) of the counterpart that it is trying to communicate with. Under LOS conditions the signals propagate directly between the two communication nodes, without relying on signal bouncing off a wall or other structure to reach the counterpart. This is sometimes not possible to achieve in practice, but it is a useful goal to keep in mind when optimizing antenna location.
- While it is good to keep RF cables short, it is most desirable for an antenna to be in the best location it can be to provide the desired coverage.
- For large deployments involving multiple units communicating with each other across a complex urban or industrial landscape, consider running an RF propagation modeling study to predict approximate simulated coverage maps and determine initial placement of the units. A propagation study may help reduce overall deployment cost by discovering and mitigating issues with RF coverage before the infrastructure is physically installed.
- Keep the antenna away from metal obstructions such as heating and air-conditioning ducts, large ceiling trusses, building superstructures, and major power cabling runs. One exception is if the antenna is designed to be mounted on a ground plane. If mounting on a ground plane, mount the antenna on a flat metal surface away from adjacent obstructions.
- It is strongly recommended not to install antennas directly on the router or access point (AP), unless the router or AP is specifically engineered to directly mount the antennas. Products that are engineered for direct mounting of antennas specifically address each of the below issues.

- Reasons to mount antennas away from the router include:
  - Router location may not be optimal location for antenna to communicate with the counterpart wirelessly, so router and antenna may need to be in different locations.
  - Router may have a clutter of Ethernet cable and power cables around it, which will obstruct antenna signal.
  - A number of routers, such as the IR1835, are modular. They have plug-in RF modules for Wi-Fi , 4G LTE or 5G NR such as WP-WIFI6, P-LTEAP18-GL, P-5GS6-GL. These modules have RF connectors spaced close together, and while it is mechanically possible to install four or five antennas directly attached, this will result in significant degradation to RF performance of antennas due to mutual de-tuning between closely spaced antennas. It is strongly recommended to install antennas away from the chassis in modular cases.
- If installing an antenna indoors, consider that the density and electromagnetic properties of the materials used in the building construction determines the number of walls the signal can pass through and still maintain adequate coverage.
  - Paper and vinyl walls have very little effect on signal penetration.
  - Solid and pre-cast concrete walls limit signal penetration to one or two walls without degrading coverage.
  - Concrete and wood block walls limit signal penetration to three or four walls.
  - A signal can penetrate five or six walls constructed of drywall or wood.
  - A thick metal wall causes signals to reflect off, causing poor penetration.
  - A chain link fence or wire mesh spaced between 1 and 1 1/2 in. (2.5 and 3.8 cm) acts as a harmonic reflector that blocks a 2.4-GHz radio signal.
  - Install the antenna away from microwave ovens and 2-GHz cordless phones. These products can cause signal interference because they operate in the same frequency range as the device your antenna is connected to.

Choosing a Mounting Location

Mount the antenna mounted clear of obstructions to the sides of the radiating elements. Generally, the higher an antenna is above the floor, the better it performs. If possible, mount the antenna on the ceiling panel within 12 in. (30.5 cm) of the access point so you can connect its cables directly to the access point. If you must mount the antenna farther away from the access point, try to make the distance as short as possible.

Installing the Antenna

You can install the antenna on a ceiling tile having a thickness between ½ in. (1.27 cm) and 1 in. (2.54 cm).

The antenna is installed to a suspended ceiling tile with a supplied 1 in. (2.54 cm) plastic nut.

The antenna cables terminate with a straight RP-TNC plug connector after a 36 in. (91.44 cm) cable. The mating connector to the antenna on the access point is an RP-TNC jack.

Tools and Equipment Required

The following tools and equipment are not provided:

- 1 in. (2.54 cm) hole saw to create a hole in the suspended ceiling tile.
- A step ladder high enough to access your ceiling safely.

Mounting the Antenna on a Ceiling Tile

To mount the antenna on a suspended ceiling tile, perform the following:

Step 1 Mark the mounting location on the ceiling tile.

Step 2 Remove the ceiling tile from the ceiling grids.

Step 3 Use a 1" (2.54 cm) hole saw to cut a hole in the ceiling tile.

Step 4 Insert the antenna cables, one at a time, through the hole in the ceiling tile.

Step 5 Insert the antenna cables, one at a time, through the hole in the plastic nut as shown in the following figure.

Figure 114: Ceiling Tile Mounting Details

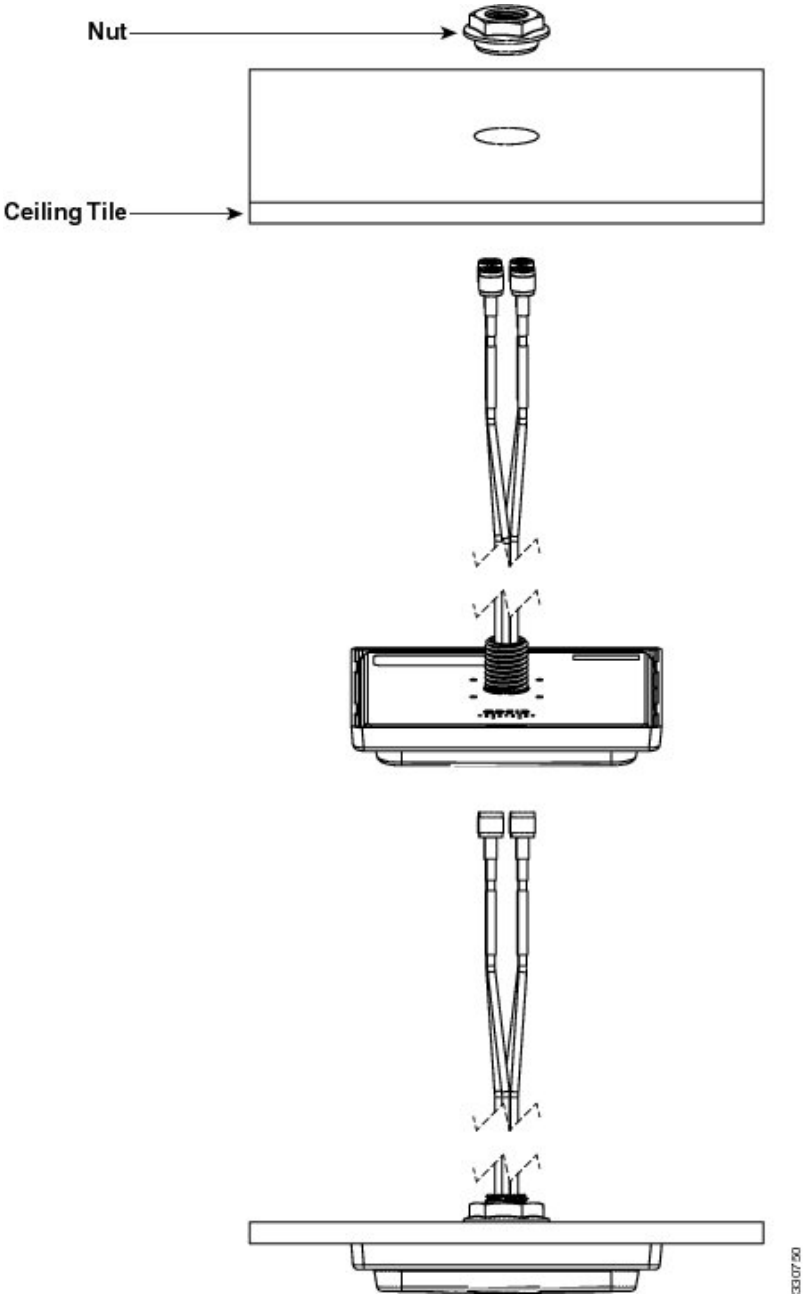

Note Do not use the rubber gasket when you mount the antenna on a ceiling tile. The gasket is not required for ceiling tile installations.

Step 6 Ensure that the antenna is properly positioned on the ceiling tile and then tighten the plastic nut hand-tight.

Step 7 Reinstall the ceiling tile.

Step 8 Connect the antenna cables to the access point.

Note The 5 GHz antenna cables are identified by a orange collar near the connectors. Ensure that you connect these cables to the 5 GHz antenna connection on the access point.

Suggested Cable

We recommend using a high-quality, low-loss cable with the antenna.

Note Coaxial cable loses efficiency as the frequency increases, resulting in signal loss. Keep the cable as short as possible as cable length determines the amount of signal loss (the longer the run, the greater the loss).

Communications, Services, and Additional Information

- To receive timely, relevant information from Cisco, sign up at Cisco Profile Manager.
- To get the business impact you're looking for with the technologies that matter, visit Cisco Services.
- To submit a service request, visit Cisco Support.
- To discover and browse secure, validated enterprise-class apps, products, solutions, and services, visit Cisco DevNet.
- To obtain general networking, training, and certification titles, visit Cisco Press.
- To find warranty information for a specific product or product family, access Cisco Warranty Finder.

Cisco Bug Search Tool

Cisco Bug Search Tool (BST) is a web-based tool that acts as a gateway to the Cisco bug tracking system that maintains a comprehensive list of defects and vulnerabilities in Cisco products and software. BST provides you with detailed defect information about your products and software.

Documentation Feedback

To provide feedback about Cisco technical documentation, use the feedback form available in the right pane of every online document.

Cisco Support Community

Cisco Support Community is a forum for you to ask and answer questions, share suggestions, and collaborate with your peers. Join the forum at https://supportforums.cisco.com/index.jspa.

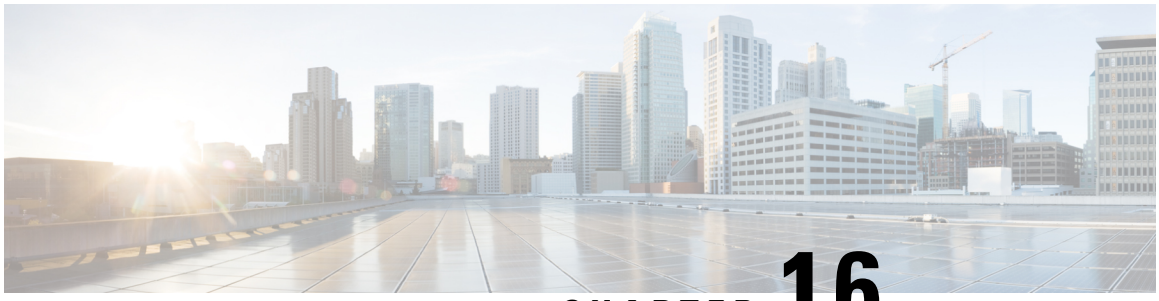

CHAPTER 16

Cisco Aironet Dual-band Dipole Antenna (AIR-ANT2524DB-R, AIR-ANT2524DG-R, and AIR-ANT2524DW-R)

-
- Overview, on page 285
- Technical Specifications, on page 286
- Features, on page 288
- System Requirements, on page 288
- General Safety Precautions, on page 288
- Guidelines to Achieving Optimal RF and Antenna Performance, on page 290
- Installing the Antenna, on page 293
- Communications, Services, and Additional Information, on page 293

Overview

This section describes the Cisco Aironet high-performance, dual-band dipole antenna, and provides specifications and mounting instructions. The antenna operates in both the 2.4 GHz and 5 GHz frequency bands, and is designed for use with Cisco Aironet 2.4 GHz and 5 GHz radio products with dual-band reverse-polarity TNC (RP-TNC) antenna ports.

The antenna has a nominal gain of 2 dBi in the 2.4 GHz frequency band and 4 dBi in the 5 GHz frequency band. The three antennas covered in this document are electrically the same. They differ physically by the color of the radome, which is specified by the product part number shown in the following table.

Table 38: Antenna Radome Colors

Antenna Part Numbers	Radome Color
AIR-ANT2524DB-R	Black
AIR-ANT2524DG-R	Gray
AIR-ANT2524DW-R	White

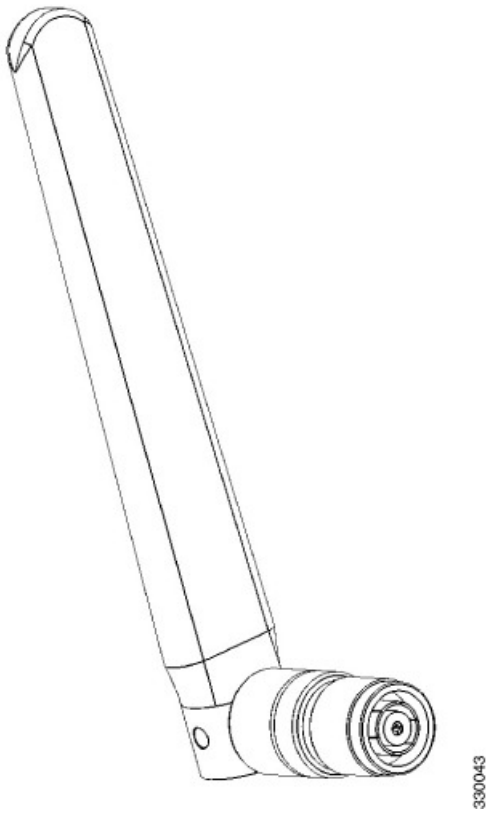

Technical Specifications

Parameter	Specification
Antenna type	Dual-band dipole
Operating frequency range	2400 to 2500 MHz
	5150 to 5850 MHz
Nominal input impedance	50 Ohms
VSWR	Less than 2:1
Peak Gain @ 2.4. GHz	2 dBi
Peak Gain @ 5 GHz	4 dBi
Elevation plane 3dB beamwidth @2.4 GHz	63 degrees
Elevation plane 3dB beamwidth @ 5 GHz	39 degrees
Connector type	RP-TNC plug
Antenna length	6.63 in. (168.5 mm)

Parameter	Specification
Antenna width	0.83 in (21 mm)
Radome length	4.88 in. (124 mm)
Weight	1.3 oz
Operating temperature	–4° to 140°F(–20°C to 60°C)
Storage temperature	–40°F to 185°F(–40°C to 85°C)
Environment	Indoor, office

Figure 115: Azimuth and Elevation Plane Patterns for 2.4 GHz

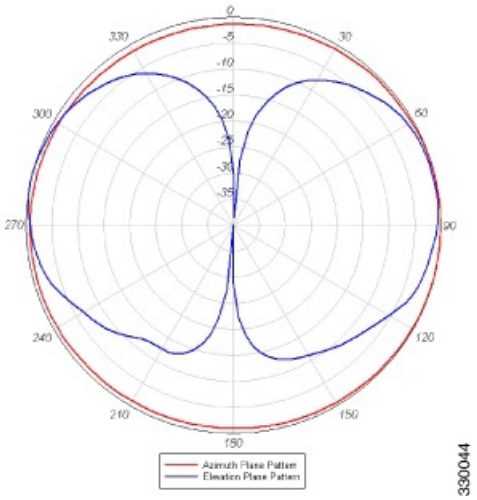

Figure 116: Azimuth and Elevation Plane Patterns for 5 GHz

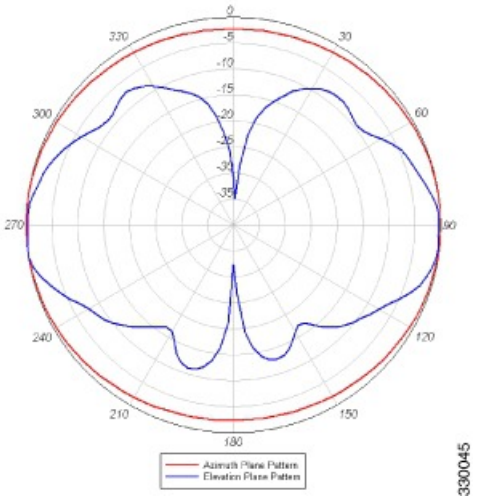

Features

The antenna has an articulated base that can be rotated 360 degrees at the connection point and from 0 to 90 degrees at its joint.

System Requirements

This antenna is designed for use with Cisco Aironet access points that support simultaneous operation in the 2.4 GHz band and the 5 GHz band and that have dual-band antenna ports, labeled in orange text.

General Safety Precautions

Warning This warning symbol means danger. You are in a situation that could cause bodily injury. Before you work on any equipment, be aware of the hazards involved with electrical circuitry and be familiar with standard practices for preventing accidents. Use the statement number provided at the end of each warning to locate its translation in the translated safety warnings that accompanied this device. **Statement 1071**

Warning Do not work on the system or connect or disconnect cables during periods of lightning activity. **Statement 1001**

Warning Do not locate the outdoor antenna near overhead power lines or other electric light or power circuits, or where it can come into contact with such circuits. When installing the antenna, take extreme care not to come into contact with such circuits, as they may cause serious injury or death. For proper installation and grounding of the antenna, please refer to national and local codes (for example, U.S.:NFPA 70, National Electrical Code, Article 810, Canada:Canadian Electrical Code, Section 54). **Statement 1052**

Warning In order to comply with FCC radio frequency (RF) exposure limits, antennas should be located at a minimum of 7.9 inches (20 cm) or more from the body of all persons. **Statement 332**

Note For your safety, and to help you achieve a good installation, please read and follow these safety precautions.

Mast Mounted or Building Mounted Installations

The following instructions are common to most mast mounted or building mounted installations. For specific installation instructions for each antenna, see the antenna data-sheet and the router hardware installation guide.

- Find someone to help you—installing an antenna is often a two-person job.
- Select your installation site with safety, as well as performance, in mind. Remember that electric power lines and phone lines look alike. For your safety, assume that any overhead line can kill you.
- Contact your electric power company. Tell them your plans and ask them to come look at your proposed installation.
- Do not use a metal ladder.
- Do not work on a wet or windy day.
- Do dress properly—wear shoes with rubber soles and heels, rubber gloves, and a long-sleeved shirt or jacket.
- If the assembly starts to drop, move away from it and let it fall. Because the antenna, mast, cable, and metal guy wires are all excellent conductors of electrical current, even the slightest touch of any of these parts to a power line completes an electrical path through the antenna and the installer.
- If any part of the antenna system should come in contact with a power line, do not touch it or try to remove it yourself. Call your local power company to have it removed safely.
- If an accident should occur with the power lines, call for qualified emergency help immediately.
- Assemble your new antenna on the ground or a level surface at the installation site.
- Connect its coaxial cable while you are on the ground and attach the antenna to the mast.
- Ensure that the mast does not fall as you raise or remove it. Use a durable non-conductive rope secured at each two foot level as the mast is raised. Have an assistant tend the rope, ready to pull the mast clear of any hazards (such as power lines) should it begin to fall.
- Use the mounting bracket provided with the antenna.
- If the installation will use guy wires:
    - Install guy anchor bolts.
    - Estimate the length of guy wire and cut it before raising the mast.
    - Attach guy wires to a mast using guy rings.
    - In the case of a guyed (tall, thin mast) installation, you must have at least one assistant to hold the mast upright while the guy wires are attached and tightened to the anchor bolts.
- Attach a “DANGER” label at eye level on the mast.
- Install ground rods to remove any static electricity buildup and connect a ground wire to the mast and ground rod. Use ground rods designed for that purpose, not a spare piece of pipe.

Unused Antenna Ports

Port plugs must be installed in any unused antenna ports.

The weatherproof caps on the connectors protect the router interior from environmental elements including water, heat, cold, and dust. They are installed on unused ports before the router is shipped.

When you install a new antenna in a port with an N-connector:

- Chassis-mounted antennas—Remove the weather proof cap before installing a chassis-mounted antenna.
- External antennas—Remove weatherproof cap, then connect the supported Cisco cable to the connector.

Guidelines to Achieving Optimal RF and Antenna Performance

Antennas are a critical component of a wireless communication system. Selecting a suitable antenna, an optimal antenna location, or antenna site is essential for optimum performance of a wireless links.

This section covers general tips for optimizing RF performance of indoor and outdoor terrestrial radio systems in the 400-7125 MHz frequency range. Examples of terrestrial radio systems include 4G LTE, 5G NR, Wi-Fi, LoRa, LR-WPAN and similar. In this context GPS SPS would not be considered a terrestrial system as the signal is received from space, not from another terrestrial site.

Because the antenna transmits and receives radio signals over the air, overall RF performance of the link is susceptible to RF obstructions and common sources of RF interference that can reduce throughput and range of the system.

Follow these guidelines to optimize performance. When in doubt, consult a qualified RF professional, and check with your solution partner for specific recommendations.

Antenna Model Selection and Performance

Consider the following when planning your installation:

- When selecting the antenna, ensure that it covers the frequency ranges or frequency bands of interest, and that it has good RF parameters such as antenna efficiency, VSWR and suitable radiation pattern for every frequency range that your application will use with this antenna.
- Antenna pattern is important. Omni-directional antennas have lower gain, but allow communicating to devices in all azimuth directions. Directional antennas concentrate the beam in a specific direction, making them ideal for point to point communication.
- When a system has multiple RF ports for receive and / or transmit, as is the case for 4G LTE , 5G NR or Wi-Fi, it is highly recommended to populate all the RF ports with suitable antennas to take advantage of MIMO, rather than rely on a single port or single antenna to save on cost. Please see the MIMO section for a detailed description of MIMO benefits.
- For RF systems that support multiple RF ports and multiple RF standards such as LTE, Wi-Fi, and GPS: consider using a multi-element antenna that integrates multiple antennas under the same radome (cover). Doing so may reduce cost compared to deploying and mounting a discrete single port antenna for every RF port.
- For communication between fixed infrastructure devices, such as mesh nodes or a point-to-point backhaul link, each device should have an antenna with the same polarization. If communicating with mobile devices that might be randomly oriented, consider dual-polarized antennas, such as those with both vertical and horizontal or slant +45° and -45° polarized elements.

Antenna Environmental Specifications

The selected antenna must have suitable mechanical and environmental specifications for the environment where it will be deployed. For example, shock and vibration specifications for transportation, corrosion resistant construction for marine and oil and gas industries, or IP (ingress protection) rating for outdoor

deployment. Indoor antennas are typically not suitable for harsh industrial environments. Please check with your system integrator for environmental requirements for your application.

Antenna Accessories and Mounting

Consider the following when planning your installation:

- Carefully consider what type of other RF accessories, besides antenna, such as RF cables, lightning arrestors or RF adapters may be required in your installations. It is best to minimize long RF cable runs due to RF signal losses in the cable. Thinner RF cables have more RF loss , thicker cables are less flexible and more expensive.
- Carefully consider how the antenna will be physically mounted, as this may affect antenna selection. For example, a stud mount mechanical mounting design is a better fit for mounting on top of an electrical cabinet than a mast mount antenna.
- For outdoor deployments, follow installation instructions for the antenna. It is good practice to keep protective covers on the radio's RF ports and any antenna or accessory RF ports until the moment the interfaces are mated. This reduces chances of contamination, trapping water or condensation inside the connector, or accidental damage to RF interfaces.

MIMO Performance and Arrays

MIMO systems deliver benefits of higher SNR, higher reliability and higher throughput compared to single antenna systems. In more technical terms, MIMO delivers array gain, diversity gain and multiplexing gain compared to single antenna.

- Array gain — Improvement in SNR (signal to noise ratio) by coherently combining signals from multiple antennas. For example, increasing SNR through beamforming techniques.
- Diversity gain — Improvement in reliability by mitigating deep fading or strong destructive EM wave interference. For example, in a two-antenna system, if one antenna is experiencing deep fading due to an EM destructive null at its location at a given instant, the other antenna is unlikely to have a null at the same instant, and the combined SNR stays at a reliable level. In contrast, a single antenna would see SNR oscillating between good SNR and very poor SNR and reliability would degrade.
- Multiplexing gain — Increase in system capacity or throughput by sending independent data over multiple spatial streams simultaneously. The number of streams cannot be more than the number of antennas. For example, to support three spatial streams, a minimum of three antennas is required. Often there may be additional antennas for diversity or redundancy, such as in the case of 4x4:3, or 4x4 MIMO with 3 spatial streams.

If deploying multiple single-element antennas for a MIMO system in an array, ensure sufficient spacing between the antennas. Omnidirectional elements should generally be at least one wavelength apart at the lowest operating frequency.

Consider the following:

- For Wi-Fi systems operating in the 2.4, 5, and/or 6 GHz bands, space elements at least 5 inches (12.5 cm) apart.
- For 4G LTE and 5G systems with the lowest operating frequency of 617 MHz , space elements at least 20 inches (50 cm) apart.

- Note that spacing between elements inside multi-element MIMO antennas is often less than one wavelength. However multi-element antennas are engineered with MIMO performance in mind, by providing antenna diversity through pattern, polarization, and isolation between MIMO elements.

Antenna siting and location

Consider the following when planning your installation:

- Plan antenna location ahead of time. Ideal location for an antenna is in LOS (line of sight) of the counterpart that it is trying to communicate with. Under LOS conditions the signals propagate directly between the two communication nodes, without relying on signal bouncing off a wall or other structure to reach the counterpart. This is sometimes not possible to achieve in practice, but it is a useful goal to keep in mind when optimizing antenna location.
- While it is good to keep RF cables short, it is most desirable for an antenna to be in the best location it can be to provide the desired coverage.
- For large deployments involving multiple units communicating with each other across a complex urban or industrial landscape, consider running an RF propagation modeling study to predict approximate simulated coverage maps and determine initial placement of the units. A propagation study may help reduce overall deployment cost by discovering and mitigating issues with RF coverage before the infrastructure is physically installed.
- Keep the antenna away from metal obstructions such as heating and air-conditioning ducts, large ceiling trusses, building superstructures, and major power cabling runs. One exception is if the antenna is designed to be mounted on a ground plane. If mounting on a ground plane, mount the antenna on a flat metal surface away from adjacent obstructions.
- It is strongly recommended not to install antennas directly on the router or access point (AP), unless the router or AP is specifically engineered to directly mount the antennas. Products that are engineered for direct mounting of antennas specifically address each of the below issues.
- Reasons to mount antennas away from the router include:
  - Router location may not be optimal location for antenna to communicate with the counterpart wirelessly, so router and antenna may need to be in different locations.
  - Router may have a clutter of Ethernet cable and power cables around it, which will obstruct antenna signal.
  - A number of routers, such as the IR1835, are modular. They have plug-in RF modules for Wi-Fi , 4G LTE or 5G NR such as WP-WIFI6, P-LTEAP18-GL, P-5GS6-GL. These modules have RF connectors spaced close together, and while it is mechanically possible to install four or five antennas directly attached, this will result in significant degradation to RF performance of antennas due to mutual de-tuning between closely spaced antennas. It is strongly recommended to install antennas away from the chassis in modular cases.
- If installing an antenna indoors, consider that the density and electromagnetic properties of the materials used in the building construction determines the number of walls the signal can pass through and still maintain adequate coverage.
  - Paper and vinyl walls have very little effect on signal penetration.
  - Solid and pre-cast concrete walls limit signal penetration to one or two walls without degrading coverage.

- Concrete and wood block walls limit signal penetration to three or four walls.
- A signal can penetrate five or six walls constructed of drywall or wood.
- A thick metal wall causes signals to reflect off, causing poor penetration.
- A chain link fence or wire mesh spaced between 1 and 1 1/2 in. (2.5 and 3.8 cm) acts as a harmonic reflector that blocks a 2.4-GHz radio signal.
- Install the antenna away from microwave ovens and 2-GHz cordless phones. These products can cause signal interference because they operate in the same frequency range as the device your antenna is connected to.

Installing the Antenna



Caution The AIR-ANT2524Dx-R series of antennas are dual-band antennas, meaning that they operate in both the 2.4 GHz and 5 GHz frequency bands. The AIR-ANT2524Dx-R series antennas have an orange ID band on them to indicate their dual-band functionality. Connect these antennas only to dual-band antenna ports, which are identified with orange text on Cisco Aironet access points. Using these antennas on Cisco Aironet access points that employ single-band antennas might result in lower performance.

To install the antenna:

1. Verify that the connector to which you are connecting the antenna is a dual-band antenna port, identified by orange text on the access point.
2. Align the antenna connector with the RP-TNC connector on the access point.
3. Engage the antenna connector threads with the RP-TNC connector on the access point.
4. Tighten the antenna by hand. Do not use a wrench or any other tool to tighten the antenna.
5. Adjust the antenna articulating joint to the desired position.

Communications, Services, and Additional Information

- To receive timely, relevant information from Cisco, sign up at Cisco Profile Manager.
- To get the business impact you're looking for with the technologies that matter, visit Cisco Services.
- To submit a service request, visit Cisco Support.
- To discover and browse secure, validated enterprise-class apps, products, solutions, and services, visit Cisco DevNet.
- To obtain general networking, training, and certification titles, visit Cisco Press.
- To find warranty information for a specific product or product family, access Cisco Warranty Finder.

Cisco Bug Search Tool

Cisco Bug Search Tool (BST) is a web-based tool that acts as a gateway to the Cisco bug tracking system that maintains a comprehensive list of defects and vulnerabilities in Cisco products and software. BST provides you with detailed defect information about your products and software.

Documentation Feedback

To provide feedback about Cisco technical documentation, use the feedback form available in the right pane of every online document.

Cisco Support Community

Cisco Support Community is a forum for you to ask and answer questions, share suggestions, and collaborate with your peers. Join the forum at https://supportforums.cisco.com/index.jspa.

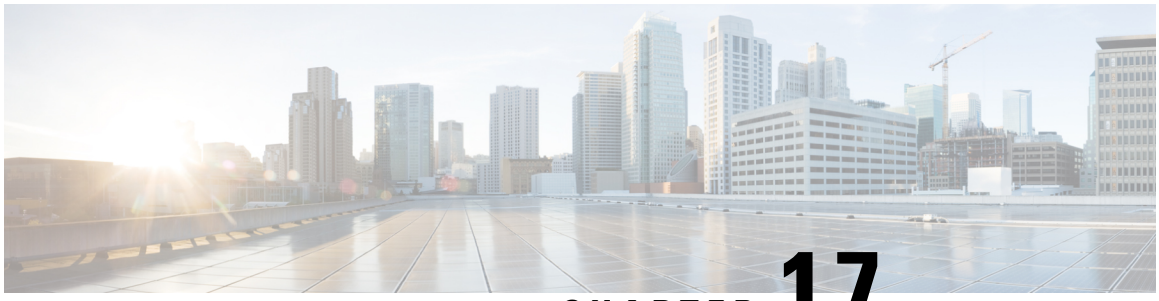

CHAPTER 17

Cisco Aironet Dual-Band MIMO Wall-Mounted Omnidirectional Antenna (AIR-ANT2544V4M-R)

This chapter contains the following:

- Overview, on page 295
- Technical Specifications, on page 296
- Radiation Patterns, on page 298
- System Requirements, on page 305
- General Safety Precautions, on page 305
- Guidelines to Achieving Optimal RF and Antenna Performance, on page 307
- Installing the Antenna, on page 310
- Suggested Cable, on page 317
- Communications, Services, and Additional Information, on page 317

Overview

This section outlines the specifications for the Cisco Aironet 2.4-GHz/5-GHz Dual-Band MIMO Wall-Mounted Omnidirectional Antenna (AIR-ANT2544V4M-R) and provides instructions for mounting it. The antenna operates in the 2.4- and 5-GHz frequency ranges and is designed for indoor or outdoor use.

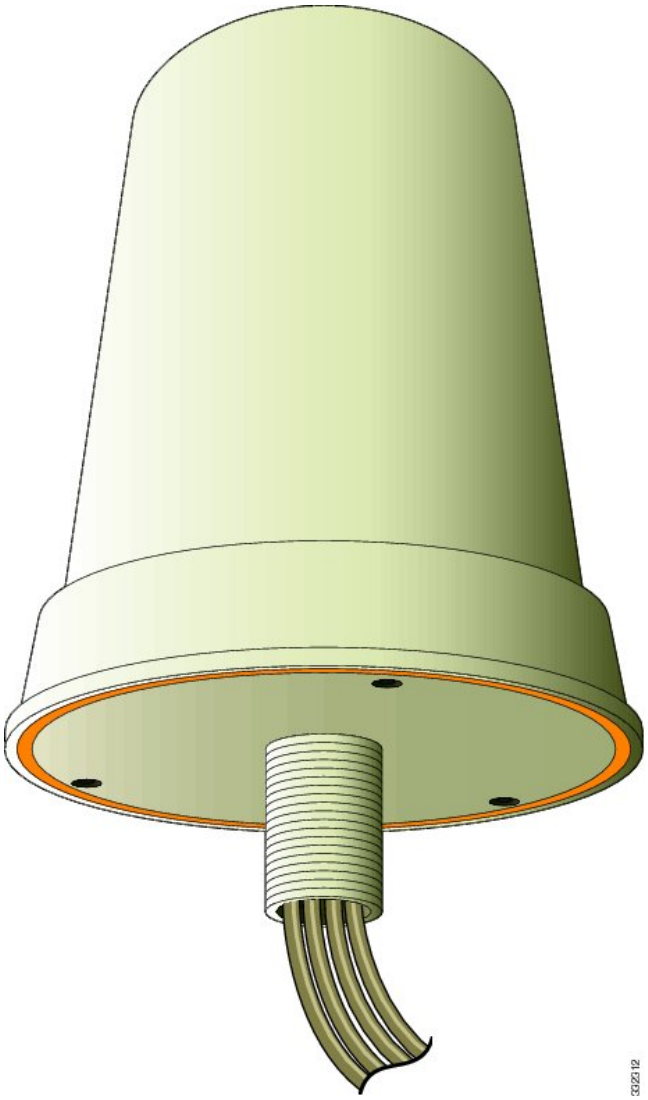

Technical Specifications

Antenna type	4-element MIMO omnidirectional
Operating frequency range	2400–2484 MHz
	5150–5850 MHz
Nominal input impedance	50 Ohms
VSWR	2:1 or less
Peak gain	2.4-GHz band: 4 dBi
	5-GHz band: 4 dBi

Antenna type	4-element MIMO omnidirectional
Polarization	Linear, vertical
Azimuth plane(3 dB beamwidth)	Ominidirectional
Elevation plane(3 dB beamwidth	2.4-GHz band: 60°
	5-GHz band: 33°
Length	8.6 in (21.8 cm)
Diameter	6.3 in (16 cm)
Weight	Antenna: 1.48 lb. (671.5 g);
Cable	3 foot (91.4 cm) plenum
Connector	RP-TNC
Environment	Indoor/outdoor
Temperature range	-22° F to 158° F(-30° C to 70° C)

Radiation Patterns

Figure 117: 2.4-GHz Antenna 1 Azimuth and Elevation Plane Patterns

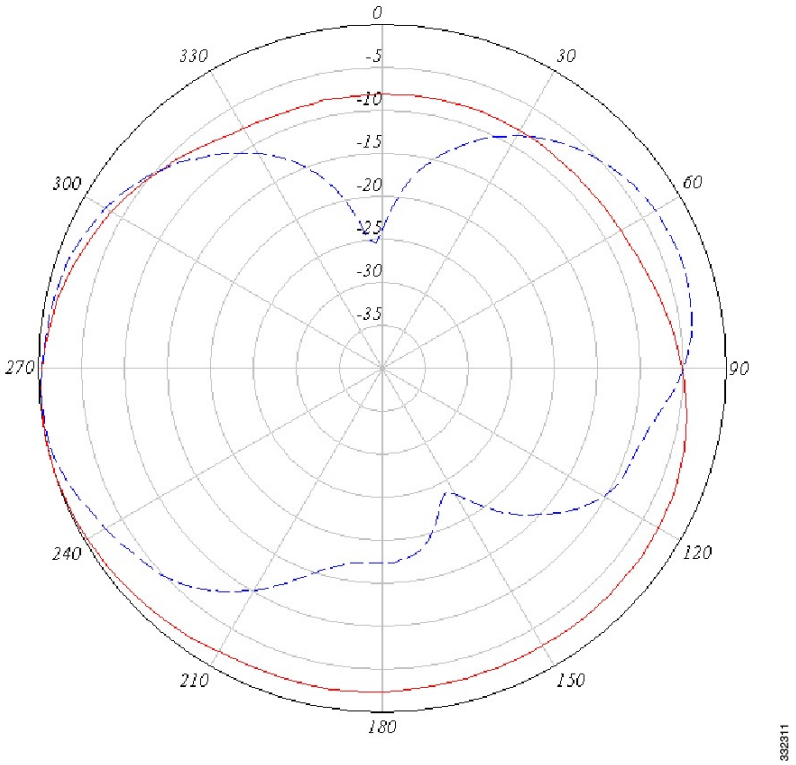

Figure 118: 5-GHz Antenna 1 Azimuth and Elevation Plane Patterns

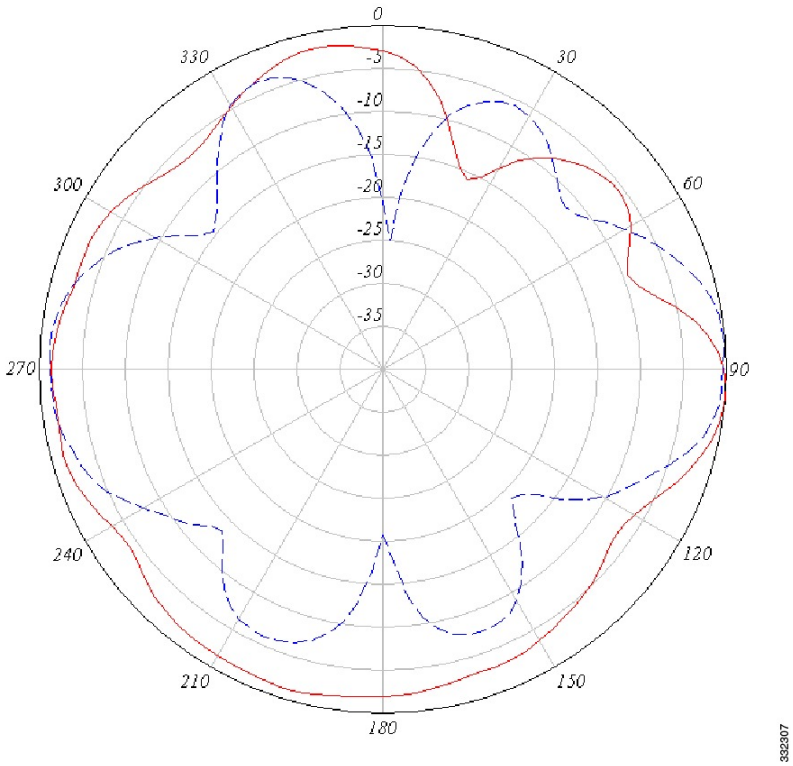

Figure 119: 2.4-GHz Antenna 2 Azimuth and Elevation Plane Patterns

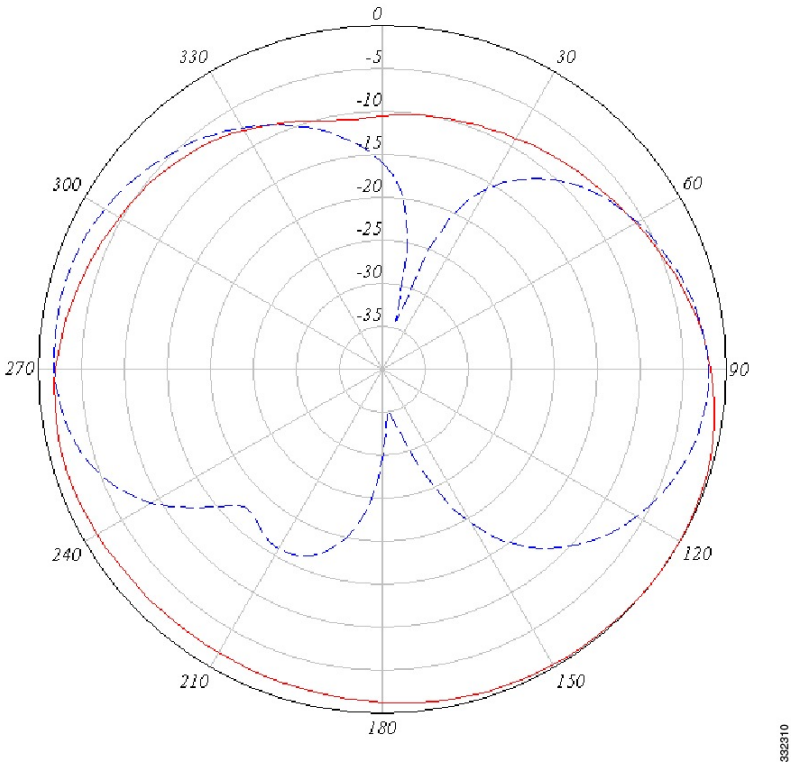

Figure 120: 5-GHz Antenna 2 Azimuth and Elevation Plane Patterns

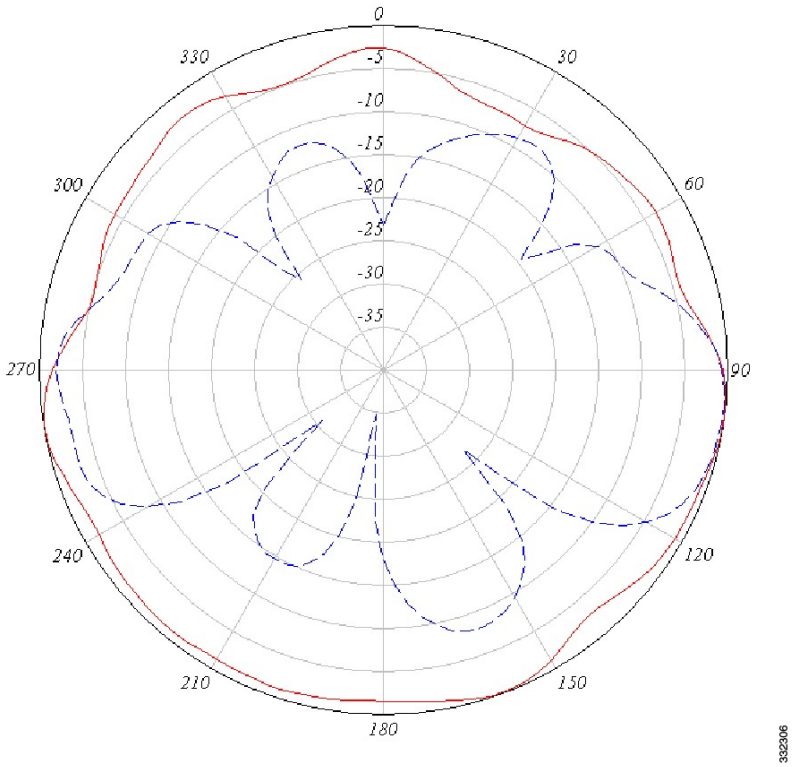

Figure 121: 2.4-GHz Antenna 3 Azimuth and Elevation Plane Patterns

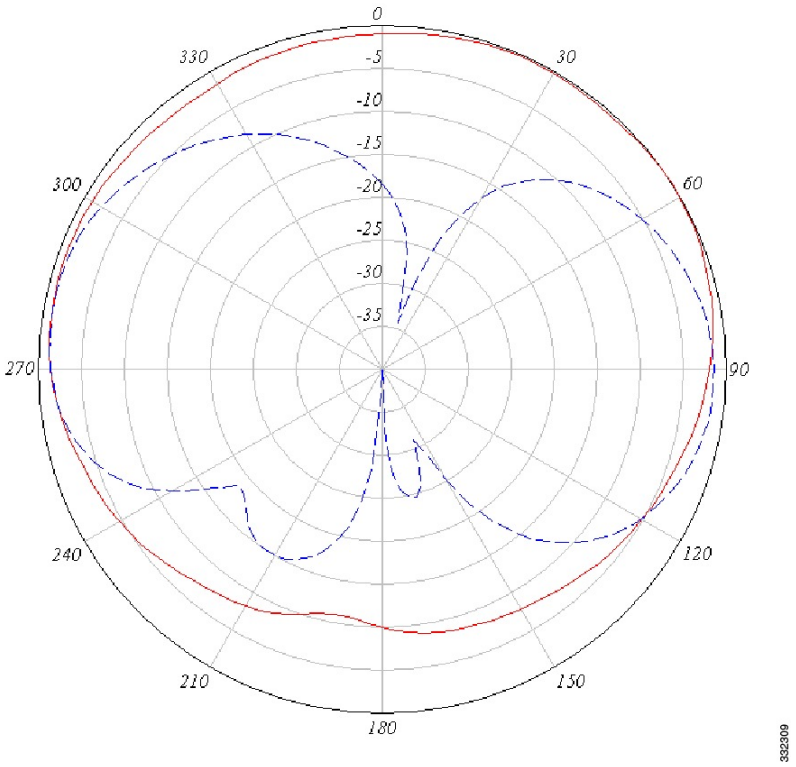

Figure 122: 5-GHz Antenna 3 Azimuth and Elevation Plane Patterns

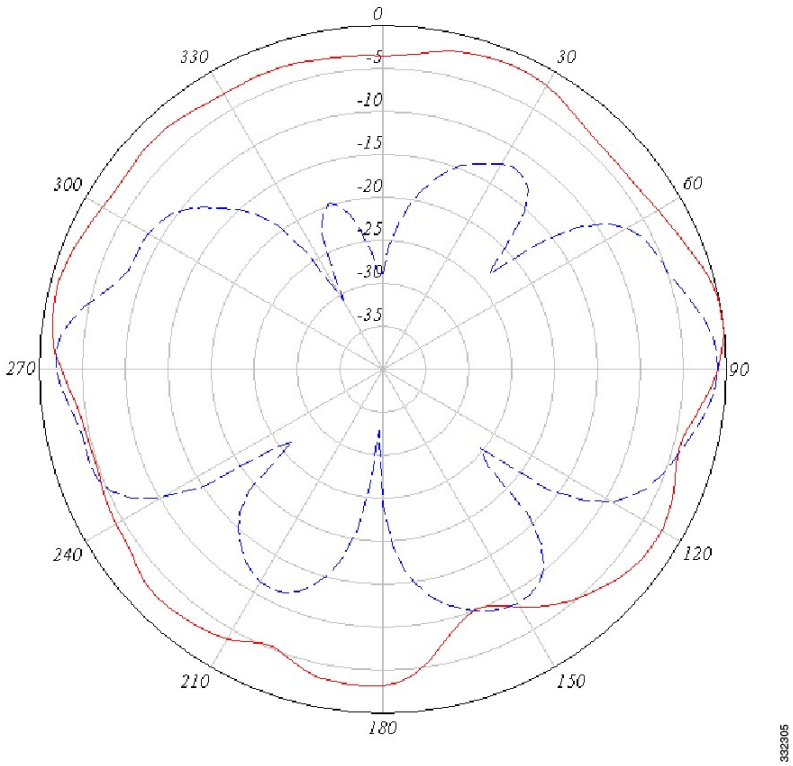

Figure 123: 2.4-GHz Antenna 4 Azimuth and Elevation Plane Patterns

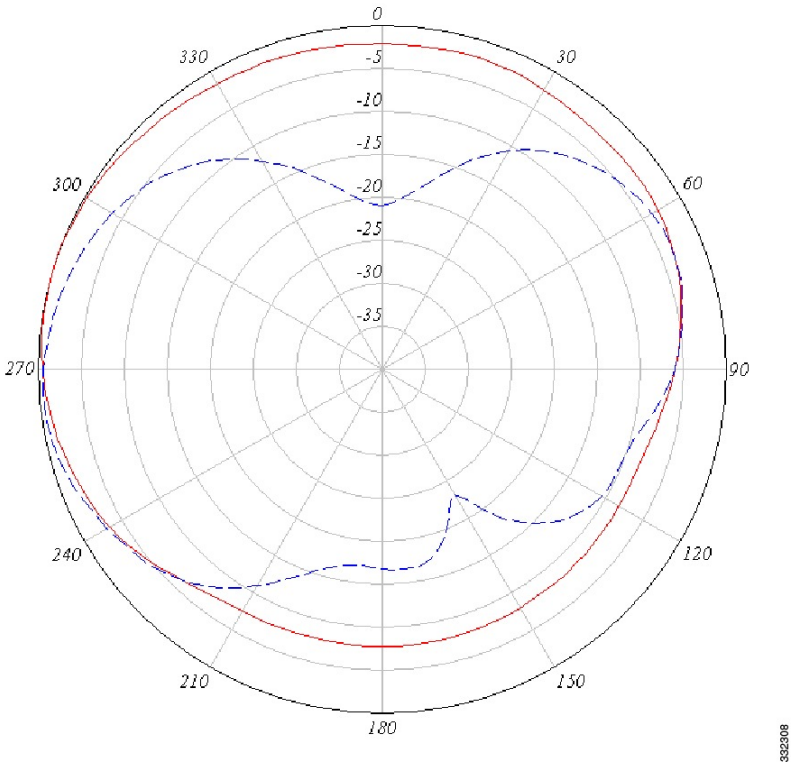

Figure 124: 5-GHz Antenna 4 Azimuth and Elevation Plane Patterns

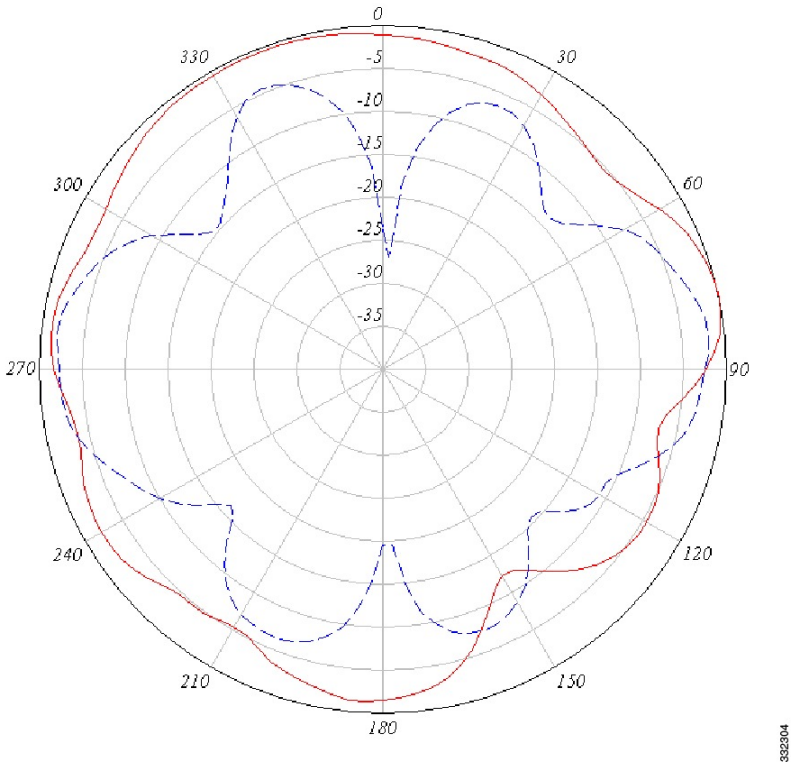

System Requirements

This antenna is designed for indoor and outdoor use with any Cisco Aironet radio device with dual-band (2.4- and 5-GHz) RP-TNC connectors.

General Safety Precautions

Warning This warning symbol means danger. You are in a situation that could cause bodily injury. Before you work on any equipment, be aware of the hazards involved with electrical circuitry and be familiar with standard practices for preventing accidents. Use the statement number provided at the end of each warning to locate its translation in the translated safety warnings that accompanied this device. **Statement 1071**

Warning Do not work on the system or connect or disconnect cables during periods of lightning activity. **Statement 1001**

Warning Do not locate the outdoor antenna near overhead power lines or other electric light or power circuits, or where it can come into contact with such circuits. When installing the antenna, take extreme care not to come into contact with such circuits, as they may cause serious injury or death. For proper installation and grounding of the antenna, please refer to national and local codes (for example, U.S.:NFPA 70, National Electrical Code, Article 810, Canada:Canadian Electrical Code, Section 54). **Statement 1052**

Warning In order to comply with FCC radio frequency (RF) exposure limits, antennas should be located at a minimum of 7.9 inches (20 cm) or more from the body of all persons. **Statement 332**

Note For your safety, and to help you achieve a good installation, please read and follow these safety precautions.

Mast Mounted or Building Mounted Installations

The following instructions are common to most mast mounted or building mounted installations. For specific installation instructions for each antenna, see the antenna data-sheet and the router hardware installation guide.

- Find someone to help you—installing an antenna is often a two-person job.
- Select your installation site with safety, as well as performance, in mind. Remember that electric power lines and phone lines look alike. For your safety, assume that any overhead line can kill you.
- Contact your electric power company. Tell them your plans and ask them to come look at your proposed installation.
- Do not use a metal ladder.
- Do not work on a wet or windy day.
- Do dress properly—wear shoes with rubber soles and heels, rubber gloves, and a long-sleeved shirt or jacket.
- If the assembly starts to drop, move away from it and let it fall. Because the antenna, mast, cable, and metal guy wires are all excellent conductors of electrical current, even the slightest touch of any of these parts to a power line completes an electrical path through the antenna and the installer.
- If any part of the antenna system should come in contact with a power line, do not touch it or try to remove it yourself. Call your local power company to have it removed safely.
- If an accident should occur with the power lines, call for qualified emergency help immediately.
- Assemble your new antenna on the ground or a level surface at the installation site.
- Connect its coaxial cable while you are on the ground and attach the antenna to the mast.
- Ensure that the mast does not fall as you raise or remove it. Use a durable non-conductive rope secured at each two foot level as the mast is raised. Have an assistant tend the rope, ready to pull the mast clear of any hazards (such as power lines) should it begin to fall.
- Use the mounting bracket provided with the antenna.

- If the installation will use guy wires:
  - Install guy anchor bolts.
  - Estimate the length of guy wire and cut it before raising the mast.
  - Attach guy wires to a mast using guy rings.
  - In the case of a guyed (tall, thin mast) installation, you must have at least one assistant to hold the mast upright while the guy wires are attached and tightened to the anchor bolts.
- Attach a “DANGER” label at eye level on the mast.
- Install ground rods to remove any static electricity buildup and connect a ground wire to the mast and ground rod. Use ground rods designed for that purpose, not a spare piece of pipe.

Unused Antenna Ports

Port plugs must be installed in any unused antenna ports.

The weatherproof caps on the connectors protect the router interior from environmental elements including water, heat, cold, and dust. They are installed on unused ports before the router is shipped.

When you install a new antenna in a port with an N-connector:

- Chassis-mounted antennas—Remove the weather proof cap before installing a chassis-mounted antenna.
- External antennas—Remove weatherproof cap, then connect the supported Cisco cable to the connector.

Guidelines to Achieving Optimal RF and Antenna Performance

Antennas are a critical component of a wireless communication system. Selecting a suitable antenna, an optimal antenna location, or antenna site is essential for optimum performance of a wireless links.

This section covers general tips for optimizing RF performance of indoor and outdoor terrestrial radio systems in the 400-7125 MHz frequency range. Examples of terrestrial radio systems include 4G LTE, 5G NR, Wi-Fi, LoRa, LR-WPAN and similar. In this context GPS SPS would not be considered a terrestrial system as the signal is received from space, not from another terrestrial site.

Because the antenna transmits and receives radio signals over the air, overall RF performance of the link is susceptible to RF obstructions and common sources of RF interference that can reduce throughput and range of the system.

Follow these guidelines to optimize performance. When in doubt, consult a qualified RF professional, and check with your solution partner for specific recommendations.

Antenna Model Selection and Performance

Consider the following when planning your installation:

- When selecting the antenna, ensure that it covers the frequency ranges or frequency bands of interest, and that it has good RF parameters such as antenna efficiency, VSWR and suitable radiation pattern for every frequency range that your application will use with this antenna.

- Antenna pattern is important. Omni-directional antennas have lower gain, but allow communicating to devices in all azimuth directions. Directional antennas concentrate the beam in a specific direction, making them ideal for point to point communication.
- When a system has multiple RF ports for receive and / or transmit, as is the case for 4G LTE , 5G NR or Wi-Fi, it is highly recommended to populate all the RF ports with suitable antennas to take advantage of MIMO, rather than rely on a single port or single antenna to save on cost. Please see the MIMO section for a detailed description of MIMO benefits.
- For RF systems that support multiple RF ports and multiple RF standards such as LTE, Wi-Fi, and GPS: consider using a multi-element antenna that integrates multiple antennas under the same radome (cover). Doing so may reduce cost compared to deploying and mounting a discrete single port antenna for every RF port.
- For communication between fixed infrastructure devices, such as mesh nodes or a point-to-point backhaul link, each device should have an antenna with the same polarization. If communicating with mobile devices that might be randomly oriented, consider dual-polarized antennas, such as those with both vertical and horizontal or slant +45° and -45° polarized elements.

Antenna Environmental Specifications

The selected antenna must have suitable mechanical and environmental specifications for the environment where it will be deployed. For example, shock and vibration specifications for transportation, corrosion resistant construction for marine and oil and gas industries, or IP (ingress protection) rating for outdoor deployment. Indoor antennas are typically not suitable for harsh industrial environments. Please check with your system integrator for environmental requirements for your application.

Antenna Accessories and Mounting

Consider the following when planning your installation:

- Carefully consider what type of other RF accessories, besides antenna, such as RF cables, lightning arrestors or RF adapters may be required in your installations. It is best to minimize long RF cable runs due to RF signal losses in the cable. Thinner RF cables have more RF loss , thicker cables are less flexible and more expensive.
- Carefully consider how the antenna will be physically mounted, as this may affect antenna selection. For example, a stud mount mechanical mounting design is a better fit for mounting on top of an electrical cabinet than a mast mount antenna.
- For outdoor deployments, follow installation instructions for the antenna. It is good practice to keep protective covers on the radio’s RF ports and any antenna or accessory RF ports until the moment the interfaces are mated. This reduces chances of contamination, trapping water or condensation inside the connector, or accidental damage to RF interfaces.

MIMO Performance and Arrays

MIMO systems deliver benefits of higher SNR, higher reliability and higher throughput compared to single antenna systems. In more technical terms, MIMO delivers array gain, diversity gain and multiplexing gain compared to single antenna.

- Array gain — Improvement in SNR (signal to noise ratio) by coherently combining signals from multiple antennas. For example, increasing SNR through beamforming techniques.

- Diversity gain — Improvement in reliability by mitigating deep fading or strong destructive EM wave interference. For example, in a two-antenna system, if one antenna is experiencing deep fading due to an EM destructive null at its location at a given instant, the other antenna is unlikely to have a null at the same instant, and the combined SNR stays at a reliable level. In contrast, a single antenna would see SNR oscillating between good SNR and very poor SNR and reliability would degrade.
- Multiplexing gain — Increase in system capacity or throughput by sending independent data over multiple spatial streams simultaneously. The number of streams cannot be more than the number of antennas. For example, to support three spatial streams, a minimum of three antennas is required. Often there may be additional antennas for diversity or redundancy, such as in the case of 4x4:3, or 4x4 MIMO with 3 spatial streams.

If deploying multiple single-element antennas for a MIMO system in an array, ensure sufficient spacing between the antennas. Omnidirectional elements should generally be at least one wavelength apart at the lowest operating frequency.

Consider the following:

- For Wi-Fi systems operating in the 2.4, 5, and/or 6 GHz bands, space elements at least 5 inches (12.5 cm) apart.
- For 4G LTE and 5G systems with the lowest operating frequency of 617 MHz , space elements at least 20 inches (50 cm) apart.
- Note that spacing between elements inside multi-element MIMO antennas is often less than one wavelength. However multi-element antennas are engineered with MIMO performance in mind, by providing antenna diversity through pattern, polarization, and isolation between MIMO elements.

Antenna siting and location

Consider the following when planning your installation:

- Plan antenna location ahead of time. Ideal location for an antenna is in LOS (line of sight) of the counterpart that it is trying to communicate with. Under LOS conditions the signals propagate directly between the two communication nodes, without relying on signal bouncing off a wall or other structure to reach the counterpart. This is sometimes not possible to achieve in practice, but it is a useful goal to keep in mind when optimizing antenna location.
- While it is good to keep RF cables short, it is most desirable for an antenna to be in the best location it can be to provide the desired coverage.
- For large deployments involving multiple units communicating with each other across a complex urban or industrial landscape, consider running an RF propagation modeling study to predict approximate simulated coverage maps and determine initial placement of the units. A propagation study may help reduce overall deployment cost by discovering and mitigating issues with RF coverage before the infrastructure is physically installed.
- Keep the antenna away from metal obstructions such as heating and air-conditioning ducts, large ceiling trusses, building superstructures, and major power cabling runs. One exception is if the antenna is designed to be mounted on a ground plane. If mounting on a ground plane, mount the antenna on a flat metal surface away from adjacent obstructions.
- It is strongly recommended not to install antennas directly on the router or access point (AP), unless the router or AP is specifically engineered to directly mount the antennas. Products that are engineered for direct mounting of antennas specifically address each of the below issues.

- Reasons to mount antennas away from the router include:
  - Router location may not be optimal location for antenna to communicate with the counterpart wirelessly, so router and antenna may need to be in different locations.
  - Router may have a clutter of Ethernet cable and power cables around it, which will obstruct antenna signal.
  - A number of routers, such as the IR1835, are modular. They have plug-in RF modules for Wi-Fi , 4G LTE or 5G NR such as WP-WIFI6, P-LTEAP18-GL, P-5GS6-GL. These modules have RF connectors spaced close together, and while it is mechanically possible to install four or five antennas directly attached, this will result in significant degradation to RF performance of antennas due to mutual de-tuning between closely spaced antennas. It is strongly recommended to install antennas away from the chassis in modular cases.
- If installing an antenna indoors, consider that the density and electromagnetic properties of the materials used in the building construction determines the number of walls the signal can pass through and still maintain adequate coverage.
  - Paper and vinyl walls have very little effect on signal penetration.
  - Solid and pre-cast concrete walls limit signal penetration to one or two walls without degrading coverage.
  - Concrete and wood block walls limit signal penetration to three or four walls.
  - A signal can penetrate five or six walls constructed of drywall or wood.
  - A thick metal wall causes signals to reflect off, causing poor penetration.
  - A chain link fence or wire mesh spaced between 1 and 1 1/2 in. (2.5 and 3.8 cm) acts as a harmonic reflector that blocks a 2.4-GHz radio signal.
  - Install the antenna away from microwave ovens and 2-GHz cordless phones. These products can cause signal interference because they operate in the same frequency range as the device your antenna is connected to.

Installing the Antenna

You can install the antenna on any flat vertical surface, on a pole, or on a ceiling. All hardware for mounting the antenna on a wall or ceiling is provided. If you intend to install your antenna on another surface, you must provide the appropriate hardware.

Tools and Equipment Required

A mounting installation kit is included with the antenna and consists of the following hardware:

- Mount interface bracket
- Mount base
- Wall bracket
- One 1/4–20 x ½-in. cap screw

- One 1/4–20 wing screw
- Two #10 x ¾-in. screws
- Two #10 x ½-in. screws
- One screen mesh washer
- One spherical washer
- 3/16 allen wrench
- Rubber gasket
- Jam nut

You may need the following tools and equipment, which are not provided.

- A #2 Phillips screwdriver
- A drill and drill bit
- A pencil
- Two hose clamps

Mounting on a Vertical Surface

Follow these steps to mount your antenna on a vertical surface.

Step 1 Attach the antenna bracket to the antenna using the jam nut provided.

Figure 125: Antenna Bracket

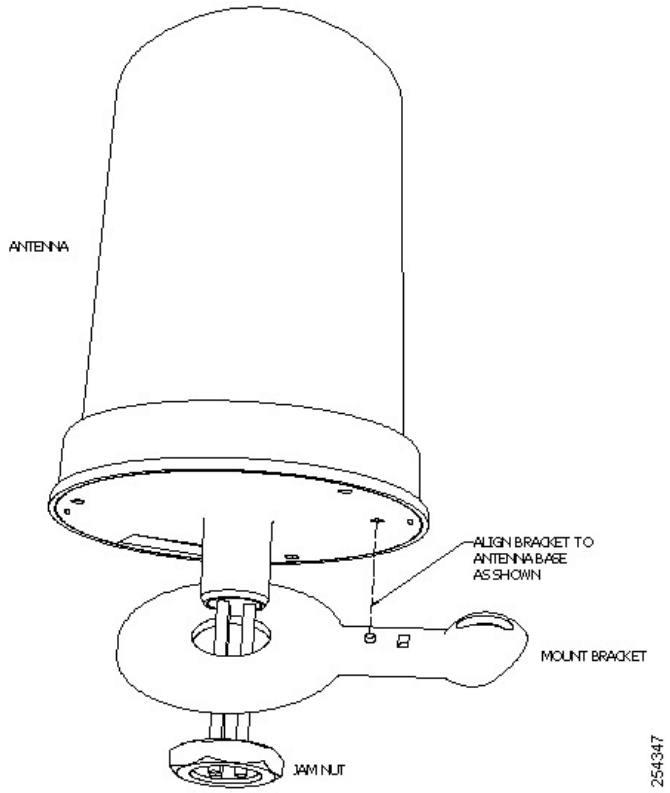

Step 2 With the screen mesh washer between the two brackets, attach the antenna bracket to the mounting bracket using the spherical washer and wing bolt provided.

Figure 126: Antenna Bracket Attached to Mounting Bracket

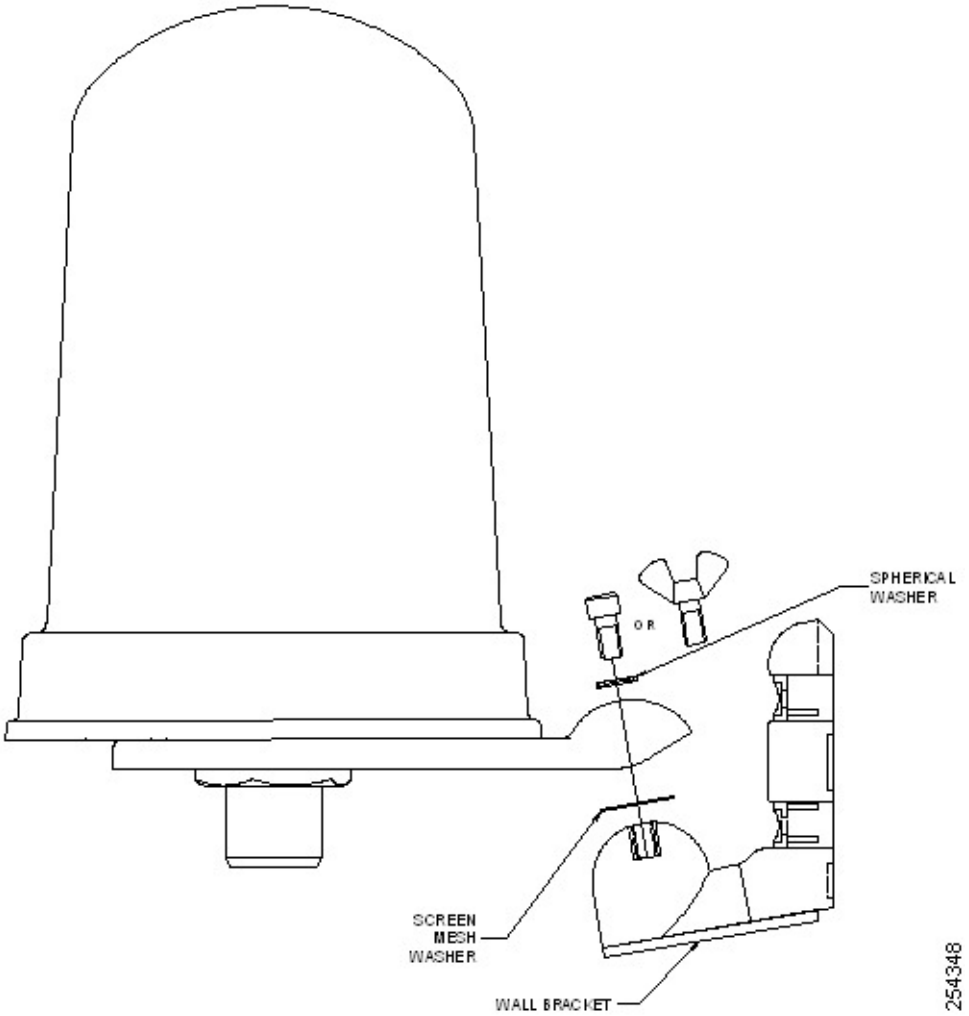

Step 3 Determine the mounting location for the antenna.

Step 4 Attach the wall bracket to the wall using the two screws provided.

Figure 127: Wall Mounting

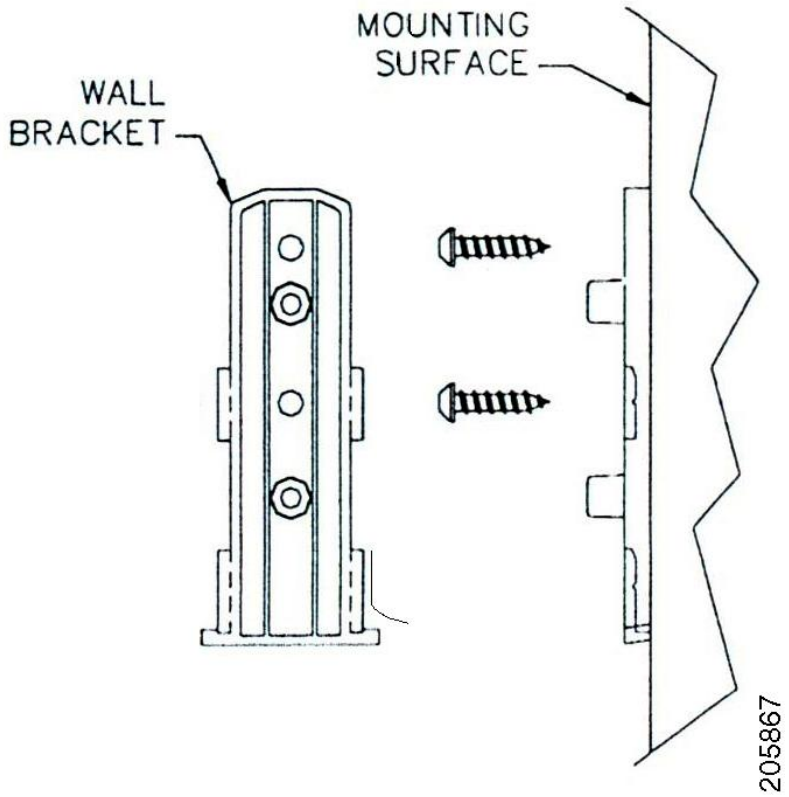

Step 5 Slide the mounting bracket onto the wall bracket and secure it in place (optional) with the two screws provided

Figure 128: Attaching Mounting Bracket to Wall Bracket

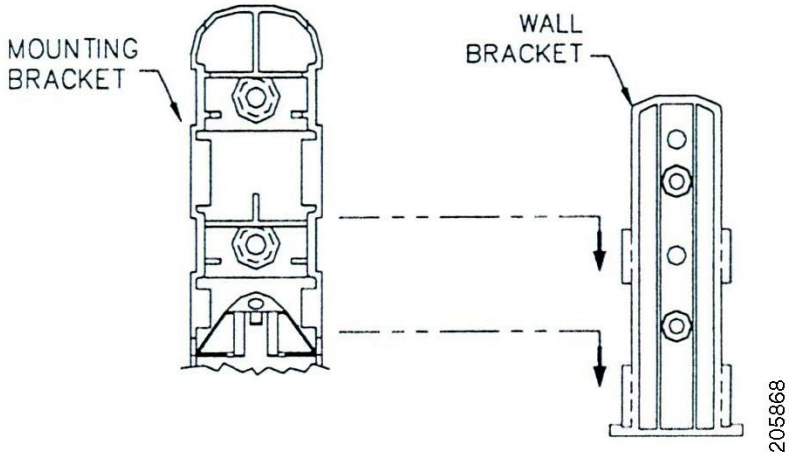

Once the antenna is secured on the wall, you can adjust the azimuth and elevation.

To adjust the azimuth and elevation, loosen the bolt that attaches the antenna bracket to the mounting bracket. Azimuth can be adjusted ±90 degrees. Elevation can be adjusted +15 degrees and -35 degrees.

Figure 129: Azimuth and Elevation Adjustment

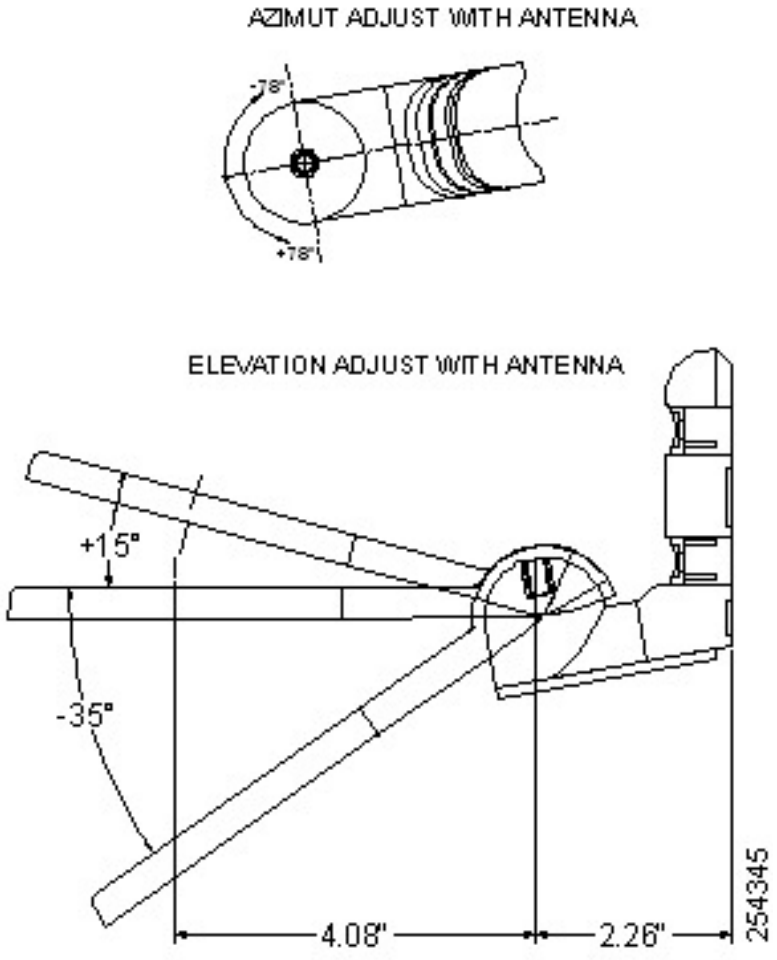

Outdoor Installations

You can mount this antenna outdoors. If you mount the antenna outdoors, you must ensure that the antenna cables exit from the bottom to prevent any water intrusion and to provide a drain for any moisture that may accumulate inside the antenna.

Mounting on a Ceiling

To mount the antenna on a ceiling, follow these steps:

Step 1 Drill a hole in the ceiling approximately 1.25 in. in diameter.

Step 2 Fit the rubber gasket onto the bottom of the antenna.

Step 3 Insert the antenna shaft through the hole in the ceiling.

Step 4 Thread the jam nut onto the antenna shaft and tighten.

Figure 130: Mounting on a Ceiling

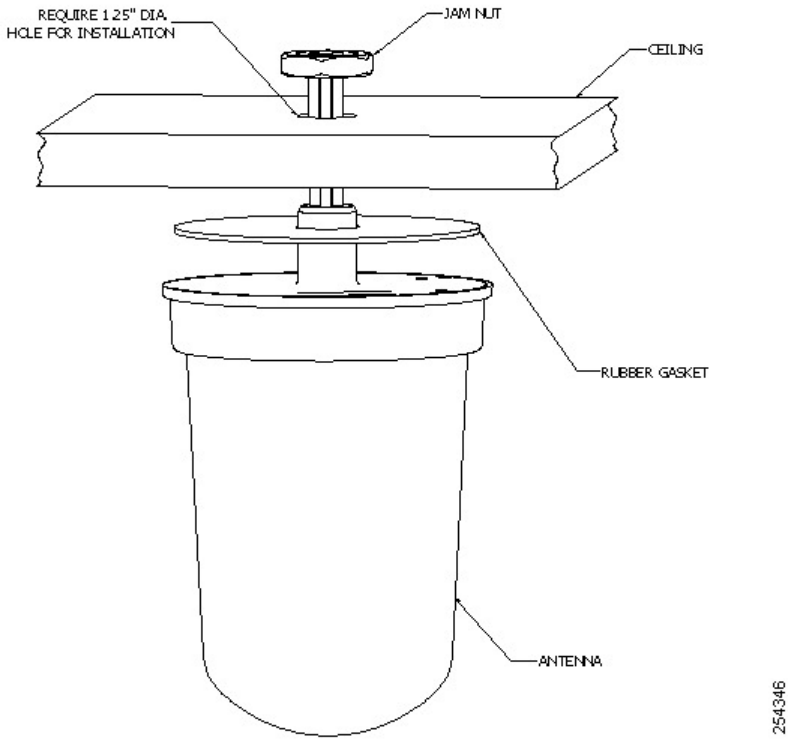

Mounting on a Mast

The antenna can be mounted on a mast rather than on a wall using two 1/2 inch-wide hose clamps (not provided).

To mount the antenna on a mast, follow these steps:

1. Follow Steps 1 and Step 2 from the Mounting on a Vertical Surface section.
2. Position the antenna, mounting bracket, and hose clamps on the mast.
3. Tighten the hose clamps until the antenna is secure on the mast. Once the antenna is secured on the mast, you can adjust the azimuth and elevation.
4. To adjust the azimuth and elevation, loosen the bolt that attaches the antenna bracket to the mounting bracket. Azimuth can be adjusted ±90 degrees. Elevation can be adjusted +15 degrees and -35 degrees.

Suggested Cable

Cisco recommends a high-quality, low-loss cable for use with the antenna.

Note Coaxial cable loses efficiency as the frequency increases, resulting in signal loss. The cable should be kept as short as possible because cable length also determines the amount of signal loss (the longer the run, the greater the loss).

Communications, Services, and Additional Information

- To receive timely, relevant information from Cisco, sign up at Cisco Profile Manager.
- To get the business impact you're looking for with the technologies that matter, visit Cisco Services.
- To submit a service request, visit Cisco Support.
- To discover and browse secure, validated enterprise-class apps, products, solutions, and services, visit Cisco DevNet.
- To obtain general networking, training, and certification titles, visit Cisco Press.
- To find warranty information for a specific product or product family, access Cisco Warranty Finder.

Cisco Bug Search Tool

Cisco Bug Search Tool (BST) is a web-based tool that acts as a gateway to the Cisco bug tracking system that maintains a comprehensive list of defects and vulnerabilities in Cisco products and software. BST provides you with detailed defect information about your products and software.

Documentation Feedback

To provide feedback about Cisco technical documentation, use the feedback form available in the right pane of every online document.

Cisco Support Community

Cisco Support Community is a forum for you to ask and answer questions, share suggestions, and collaborate with your peers. Join the forum at https://supportforums.cisco.com/index.jspa.

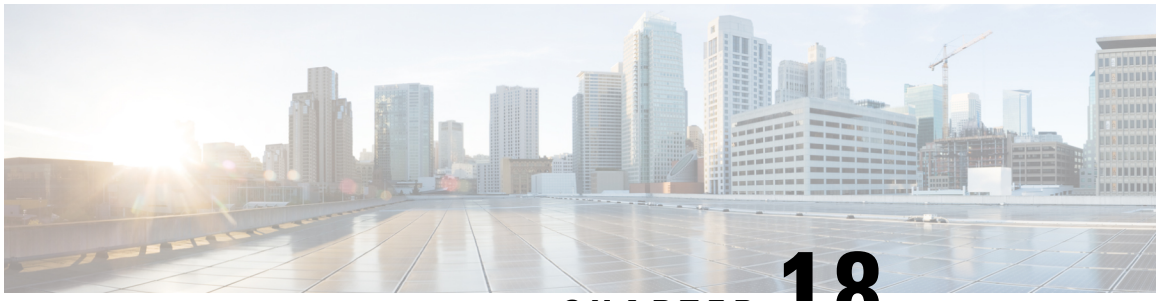

CHAPTER 18

Cisco Aironet Dual-Band Omni-Directional Antenna (AIR-ANT2547V-N, AIR-ANT2547V-N-HZ, and ANT2547VG-N)

This chapter contains the following:

- Overview, on page 319
- Technical Specifications, on page 320
- Radiation Patterns, on page 321
- System Requirements, on page 324
- General Safety Precautions, on page 324
- Guidelines to Achieving Optimal RF and Antenna Performance, on page 326
- Installation Notes, on page 329
- Communications, Services, and Additional Information, on page 330

Overview

This section describes the Cisco Aironet AIR-ANT2547V-N, AIR-ANT2547V-N-HZ, and ANT2547VG-N dual-band omni-directional antennas and provides specifications and mounting instructions. These antennas are designed for outdoor use with Cisco Aironet Outdoor Access Points with radios operating in the 2.4 GHz and 5 GHz frequency bands.

These three antennas are functionally the same, and will be referred to as a singular antenna throughout the rest of this guide. The three antennas are:

Table 39: Antenna SKUs

AIR-ANT2547V-N	White
AIR-ANT2547VG-N	Gray
AIR-ANT2547V-N-HZ	White, Hazardous Locations



Technical Specifications

Antenna type	Omni-directional colinear array
Operating frequency range	2400–2483 MHz; 5150–5875 MHz
2:1 VSWR bandwidth	2400–2483 MHz; 5150–5875 MHz
Nominal input impedance	50 Ohms
Gain (2400–2483 MHz)	4-dBi
Gain (5250–5875 MHz)	7-dBi
Polarization	Linear
E-plane 3-dB beamwidth	2.4 GHz: 30° for5 GHz 14°
H-plane 3-dB bandwidth	Omni-directional
Length	11.1 in. (28.2 cm)
Diameter	1.25 in. (3.17 cm)
Weight	6.0 oz. (170.0 g)
Connector type	N-Male

Antenna type	Omni-directional colinear array
Mounting	To mast mount the antenna you must purchase the U-bolt bracket from a third party
Operating temperature	-40–185°F (-40–85°C)
Water/Foreign Body Ingress	IP66, IP67
Wind rating	100 mph (161 kph) operational165 mph (265 kph) survival

Radiation Patterns

Figure 131: Azimuth Radiation Pattern (2.4 GHz)

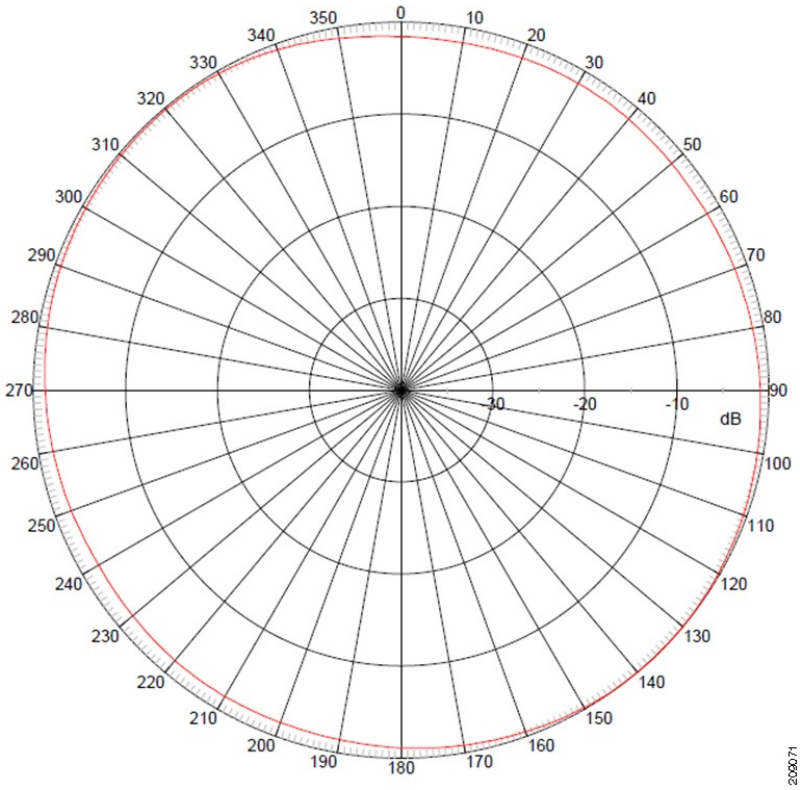

Figure 132: Elevation Radiation Pattern (2.4 GHz)

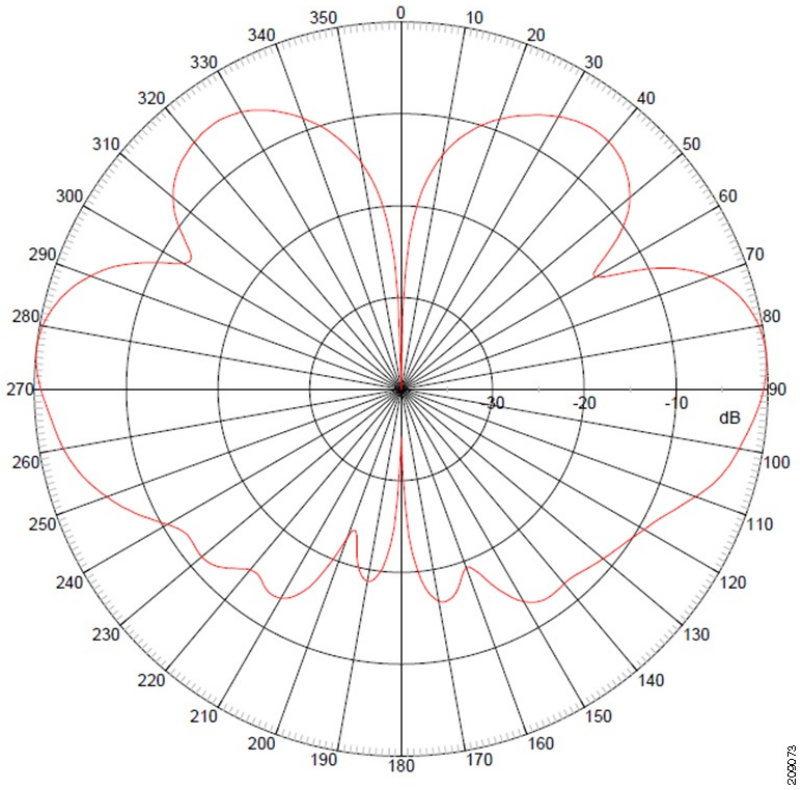

Figure 133: Azimuth Radiation Pattern (5 GHz)

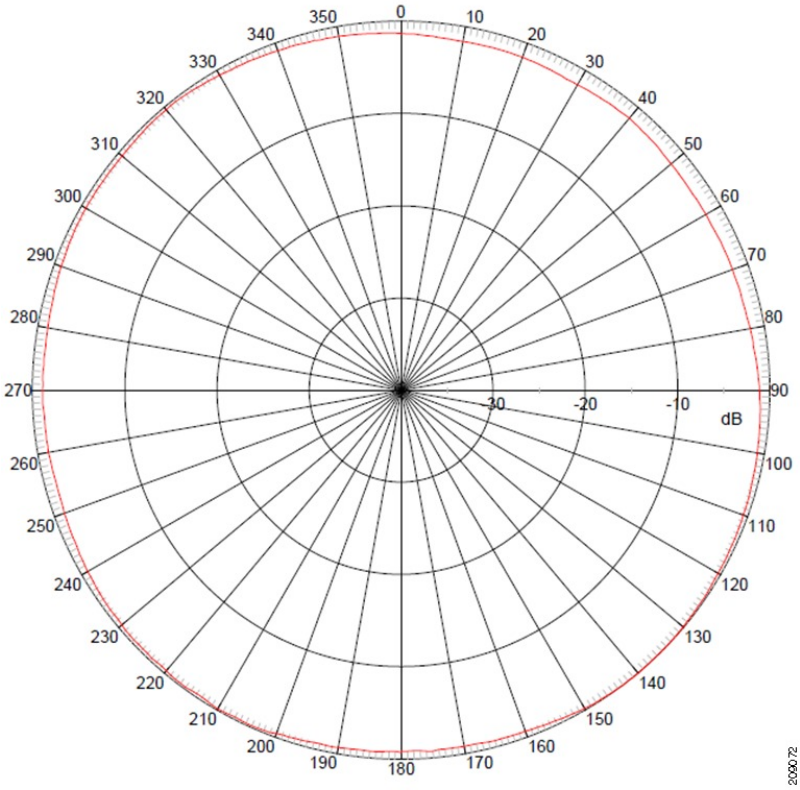

Figure 134: Elevation Radiation Pattern (5 GHz)

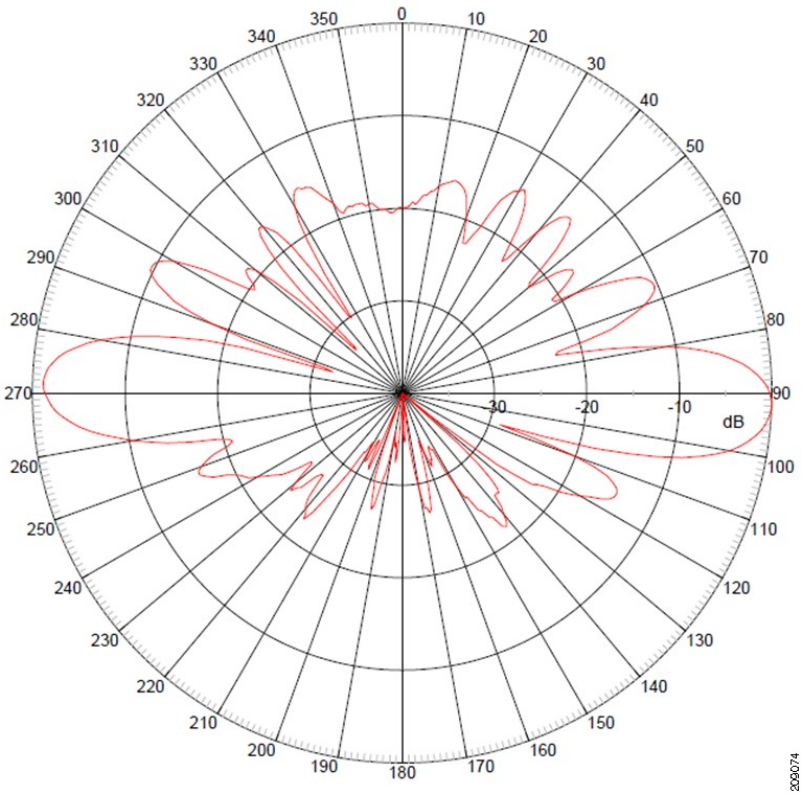

System Requirements

This antenna is designed for use with the Cisco Aironet Outdoor Access Points, specifically Cisco Aironet 1550 Series Outdoor Access Points.

General Safety Precautions

Warning This warning symbol means danger. You are in a situation that could cause bodily injury. Before you work on any equipment, be aware of the hazards involved with electrical circuitry and be familiar with standard practices for preventing accidents. Use the statement number provided at the end of each warning to locate its translation in the translated safety warnings that accompanied this device. **Statement 1071**

Warning Do not work on the system or connect or disconnect cables during periods of lightning activity. **Statement 1001**

Warning Do not locate the outdoor antenna near overhead power lines or other electric light or power circuits, or where it can come into contact with such circuits. When installing the antenna, take extreme care not to come into contact with such circuits, as they may cause serious injury or death. For proper installation and grounding of the antenna, please refer to national and local codes (for example, U.S.:NFPA 70, National Electrical Code, Article 810, Canada:Canadian Electrical Code, Section 54). **Statement 1052**

Warning In order to comply with FCC radio frequency (RF) exposure limits, antennas should be located at a minimum of 7.9 inches (20 cm) or more from the body of all persons. **Statement 332**

Note For your safety, and to help you achieve a good installation, please read and follow these safety precautions.

Mast Mounted or Building Mounted Installations

The following instructions are common to most mast mounted or building mounted installations. For specific installation instructions for each antenna, see the antenna data-sheet and the router hardware installation guide.

- Find someone to help you—installing an antenna is often a two-person job.
- Select your installation site with safety, as well as performance, in mind. Remember that electric power lines and phone lines look alike. For your safety, assume that any overhead line can kill you.
- Contact your electric power company. Tell them your plans and ask them to come look at your proposed installation.
- Do not use a metal ladder.
- Do not work on a wet or windy day.
- Do dress properly—wear shoes with rubber soles and heels, rubber gloves, and a long-sleeved shirt or jacket.
- If the assembly starts to drop, move away from it and let it fall. Because the antenna, mast, cable, and metal guy wires are all excellent conductors of electrical current, even the slightest touch of any of these parts to a power line completes an electrical path through the antenna and the installer.
- If any part of the antenna system should come in contact with a power line, do not touch it or try to remove it yourself. Call your local power company to have it removed safely.
- If an accident should occur with the power lines, call for qualified emergency help immediately.
- Assemble your new antenna on the ground or a level surface at the installation site.
- Connect its coaxial cable while you are on the ground and attach the antenna to the mast.
- Ensure that the mast does not fall as you raise or remove it. Use a durable non-conductive rope secured at each two foot level as the mast is raised. Have an assistant tend the rope, ready to pull the mast clear of any hazards (such as power lines) should it begin to fall.
- Use the mounting bracket provided with the antenna.

- If the installation will use guy wires:
  - Install guy anchor bolts.
  - Estimate the length of guy wire and cut it before raising the mast.
  - Attach guy wires to a mast using guy rings.
  - In the case of a guyed (tall, thin mast) installation, you must have at least one assistant to hold the mast upright while the guy wires are attached and tightened to the anchor bolts.
- Attach a “DANGER” label at eye level on the mast.
- Install ground rods to remove any static electricity buildup and connect a ground wire to the mast and ground rod. Use ground rods designed for that purpose, not a spare piece of pipe.

Unused Antenna Ports

Port plugs must be installed in any unused antenna ports.

The weatherproof caps on the connectors protect the router interior from environmental elements including water, heat, cold, and dust. They are installed on unused ports before the router is shipped.

When you install a new antenna in a port with an N-connector:

- Chassis-mounted antennas—Remove the weather proof cap before installing a chassis-mounted antenna.
- External antennas—Remove weatherproof cap, then connect the supported Cisco cable to the connector.

Guidelines to Achieving Optimal RF and Antenna Performance

Antennas are a critical component of a wireless communication system. Selecting a suitable antenna, an optimal antenna location, or antenna site is essential for optimum performance of a wireless links.

This section covers general tips for optimizing RF performance of indoor and outdoor terrestrial radio systems in the 400-7125 MHz frequency range. Examples of terrestrial radio systems include 4G LTE, 5G NR, Wi-Fi, LoRa, LR-WPAN and similar. In this context GPS SPS would not be considered a terrestrial system as the signal is received from space, not from another terrestrial site.

Because the antenna transmits and receives radio signals over the air, overall RF performance of the link is susceptible to RF obstructions and common sources of RF interference that can reduce throughput and range of the system.

Follow these guidelines to optimize performance. When in doubt, consult a qualified RF professional, and check with your solution partner for specific recommendations.

Antenna Model Selection and Performance

Consider the following when planning your installation:

- When selecting the antenna, ensure that it covers the frequency ranges or frequency bands of interest, and that it has good RF parameters such as antenna efficiency, VSWR and suitable radiation pattern for every frequency range that your application will use with this antenna.

- Antenna pattern is important. Omni-directional antennas have lower gain, but allow communicating to devices in all azimuth directions. Directional antennas concentrate the beam in a specific direction, making them ideal for point to point communication.
- When a system has multiple RF ports for receive and / or transmit, as is the case for 4G LTE , 5G NR or Wi-Fi, it is highly recommended to populate all the RF ports with suitable antennas to take advantage of MIMO, rather than rely on a single port or single antenna to save on cost. Please see the MIMO section for a detailed description of MIMO benefits.
- For RF systems that support multiple RF ports and multiple RF standards such as LTE, Wi-Fi, and GPS: consider using a multi-element antenna that integrates multiple antennas under the same radome (cover). Doing so may reduce cost compared to deploying and mounting a discrete single port antenna for every RF port.
- For communication between fixed infrastructure devices, such as mesh nodes or a point-to-point backhaul link, each device should have an antenna with the same polarization. If communicating with mobile devices that might be randomly oriented, consider dual-polarized antennas, such as those with both vertical and horizontal or slant +45° and -45° polarized elements.

Antenna Environmental Specifications

The selected antenna must have suitable mechanical and environmental specifications for the environment where it will be deployed. For example, shock and vibration specifications for transportation, corrosion resistant construction for marine and oil and gas industries, or IP (ingress protection) rating for outdoor deployment. Indoor antennas are typically not suitable for harsh industrial environments. Please check with your system integrator for environmental requirements for your application.

Antenna Accessories and Mounting

Consider the following when planning your installation:

- Carefully consider what type of other RF accessories, besides antenna, such as RF cables, lightning arrestors or RF adapters may be required in your installations. It is best to minimize long RF cable runs due to RF signal losses in the cable. Thinner RF cables have more RF loss , thicker cables are less flexible and more expensive.
- Carefully consider how the antenna will be physically mounted, as this may affect antenna selection. For example, a stud mount mechanical mounting design is a better fit for mounting on top of an electrical cabinet than a mast mount antenna.
- For outdoor deployments, follow installation instructions for the antenna. It is good practice to keep protective covers on the radio’s RF ports and any antenna or accessory RF ports until the moment the interfaces are mated. This reduces chances of contamination, trapping water or condensation inside the connector, or accidental damage to RF interfaces.

MIMO Performance and Arrays

MIMO systems deliver benefits of higher SNR, higher reliability and higher throughput compared to single antenna systems. In more technical terms, MIMO delivers array gain, diversity gain and multiplexing gain compared to single antenna.

- Array gain — Improvement in SNR (signal to noise ratio) by coherently combining signals from multiple antennas. For example, increasing SNR through beamforming techniques.

- Diversity gain — Improvement in reliability by mitigating deep fading or strong destructive EM wave interference. For example, in a two-antenna system, if one antenna is experiencing deep fading due to an EM destructive null at its location at a given instant, the other antenna is unlikely to have a null at the same instant, and the combined SNR stays at a reliable level. In contrast, a single antenna would see SNR oscillating between good SNR and very poor SNR and reliability would degrade.
- Multiplexing gain — Increase in system capacity or throughput by sending independent data over multiple spatial streams simultaneously. The number of streams cannot be more than the number of antennas. For example, to support three spatial streams, a minimum of three antennas is required. Often there may be additional antennas for diversity or redundancy, such as in the case of 4x4:3, or 4x4 MIMO with 3 spatial streams.

If deploying multiple single-element antennas for a MIMO system in an array, ensure sufficient spacing between the antennas. Omnidirectional elements should generally be at least one wavelength apart at the lowest operating frequency.

Consider the following:

- For Wi-Fi systems operating in the 2.4, 5, and/or 6 GHz bands, space elements at least 5 inches (12.5 cm) apart.
- For 4G LTE and 5G systems with the lowest operating frequency of 617 MHz , space elements at least 20 inches (50 cm) apart.
- Note that spacing between elements inside multi-element MIMO antennas is often less than one wavelength. However multi-element antennas are engineered with MIMO performance in mind, by providing antenna diversity through pattern, polarization, and isolation between MIMO elements.

Antenna siting and location

Consider the following when planning your installation:

- Plan antenna location ahead of time. Ideal location for an antenna is in LOS (line of sight) of the counterpart that it is trying to communicate with. Under LOS conditions the signals propagate directly between the two communication nodes, without relying on signal bouncing off a wall or other structure to reach the counterpart. This is sometimes not possible to achieve in practice, but it is a useful goal to keep in mind when optimizing antenna location.
- While it is good to keep RF cables short, it is most desirable for an antenna to be in the best location it can be to provide the desired coverage.
- For large deployments involving multiple units communicating with each other across a complex urban or industrial landscape, consider running an RF propagation modeling study to predict approximate simulated coverage maps and determine initial placement of the units. A propagation study may help reduce overall deployment cost by discovering and mitigating issues with RF coverage before the infrastructure is physically installed.
- Keep the antenna away from metal obstructions such as heating and air-conditioning ducts, large ceiling trusses, building superstructures, and major power cabling runs. One exception is if the antenna is designed to be mounted on a ground plane. If mounting on a ground plane, mount the antenna on a flat metal surface away from adjacent obstructions.
- It is strongly recommended not to install antennas directly on the router or access point (AP), unless the router or AP is specifically engineered to directly mount the antennas. Products that are engineered for direct mounting of antennas specifically address each of the below issues.

- Reasons to mount antennas away from the router include:
  - Router location may not be optimal location for antenna to communicate with the counterpart wirelessly, so router and antenna may need to be in different locations.
  - Router may have a clutter of Ethernet cable and power cables around it, which will obstruct antenna signal.
  - A number of routers, such as the IR1835, are modular. They have plug-in RF modules for Wi-Fi , 4G LTE or 5G NR such as WP-WIFI6, P-LTEAP18-GL, P-5GS6-GL. These modules have RF connectors spaced close together, and while it is mechanically possible to install four or five antennas directly attached, this will result in significant degradation to RF performance of antennas due to mutual de-tuning between closely spaced antennas. It is strongly recommended to install antennas away from the chassis in modular cases.
- If installing an antenna indoors, consider that the density and electromagnetic properties of the materials used in the building construction determines the number of walls the signal can pass through and still maintain adequate coverage.
  - Paper and vinyl walls have very little effect on signal penetration.
  - Solid and pre-cast concrete walls limit signal penetration to one or two walls without degrading coverage.
  - Concrete and wood block walls limit signal penetration to three or four walls.
  - A signal can penetrate five or six walls constructed of drywall or wood.
  - A thick metal wall causes signals to reflect off, causing poor penetration.
  - A chain link fence or wire mesh spaced between 1 and 1 1/2 in. (2.5 and 3.8 cm) acts as a harmonic reflector that blocks a 2.4-GHz radio signal.
  - Install the antenna away from microwave ovens and 2-GHz cordless phones. These products can cause signal interference because they operate in the same frequency range as the device your antenna is connected to.

Installation Notes

The antenna is designed to connect to a dedicated antenna port on the access point. No special tools are required to install the antenna directly to the access point. The antenna can also be mounted on a mast. To mast mount the antenna, you must purchase a suitable U-bolt bracket from a third party.

The antenna is resistant to the full range of outdoor environments. After the antenna is attached to the access point, seal the connections to prevent moisture and other weathering elements from affecting performance. Cisco recommends using a coax seal (such as CoaxSeal) for outdoor connections. Silicone sealant or electrical tape are not recommended for sealing outdoor connections.

Choosing a Mounting Location

The antenna is designed to create an omni-directional broadcast pattern. To achieve this pattern, mount the access point clear of obstructions to the sides of the radiating element. If the mounting location is on the side of a building or tower, the antenna pattern is degraded by the building or tower side. Generally, the higher an

antenna is above the ground, the better it performs. Install your antenna about 5 to 10 foot (1.5 to 3 m) above the roof line and away from all power lines and obstructions.

Tools and Equipment Required

No tools are required to mount the antenna directly to the access point. However, you may need a ¾-in. (19-mm) open end or combination wrench (or adjustable wrench) to remove the antenna port covers. To mast mount the antenna, you must purchase the U-bolt bracket from a third party.

For information about tools required to mount the access point, see the appropriate access point documentation.

Mounting the Antenna

To connect the antenna to the access point:

1. If necessary, remove the antenna port cover.
2. Align the antenna's N connector with the appropriate antenna port.
3. Gently push the antenna into the port.
4. Tighten the antenna hand tight.

Communications, Services, and Additional Information

- To receive timely, relevant information from Cisco, sign up at Cisco Profile Manager.
- To get the business impact you're looking for with the technologies that matter, visit Cisco Services.
- To submit a service request, visit Cisco Support.
- To discover and browse secure, validated enterprise-class apps, products, solutions, and services, visit Cisco DevNet.
- To obtain general networking, training, and certification titles, visit Cisco Press.
- To find warranty information for a specific product or product family, access Cisco Warranty Finder.

Cisco Bug Search Tool

Cisco Bug Search Tool (BST) is a web-based tool that acts as a gateway to the Cisco bug tracking system that maintains a comprehensive list of defects and vulnerabilities in Cisco products and software. BST provides you with detailed defect information about your products and software.

Documentation Feedback

To provide feedback about Cisco technical documentation, use the feedback form available in the right pane of every online document.

Cisco Support Community

Cisco Support Community is a forum for you to ask and answer questions, share suggestions, and collaborate with your peers. Join the forum at https://supportforums.cisco.com/index.jspa.

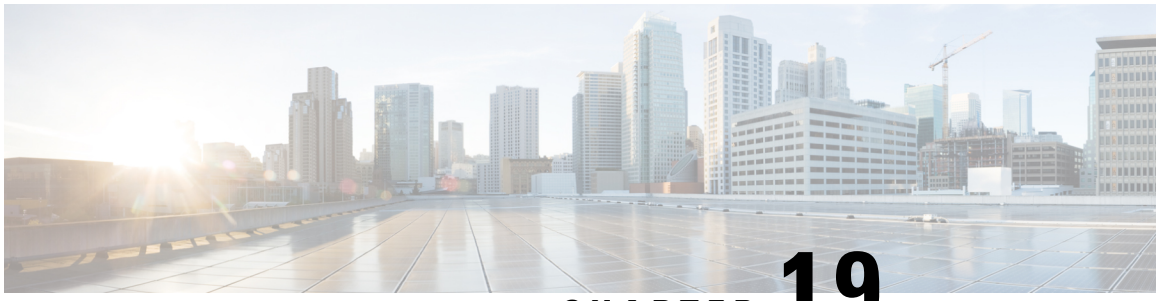

CHAPTER 19

Cisco Aironet 2.4 GHz and 5 GHz Dual-Band Polarization-Diverse Directional Array Antenna (AIR-ANT2566D4M-R)

This chapter contains the following:

- Overview, on page 333
- Technical Specifications, on page 333
- Azimuth and Elevation Radiation Patterns, on page 335
- Contents of the Antenna and Bracket Kit, on page 337
- Dimensions of the Antenna and Brackets, on page 337
- General Safety Precautions, on page 340
- Guidelines to Achieving Optimal RF and Antenna Performance, on page 342
- Installing the Antenna, on page 345
- Communications, Services, and Additional Information, on page 353

Overview

This section describes the Cisco Aironet 2.4 GHz and 5 GHz Dual-Band Polarization-Diverse Directional Array Antenna (AIR-ANT2566D4M-R), and provides electrical specifications and mounting instructions.

The AIR-ANT2566D4M-R antenna is a four-port polarization-diverse array that operates over the 2.4 GHz and 5 GHz Wi-Fi bands. It ships with an articulating mount for use on flat surfaces and masts, and is adjustable in both horizontal and vertical planes. The radome can be painted using commonly available non-conductive spray paints, such as Krylon or Rust-Oleum.

The antenna is designed for use in indoor and outdoor environments with an approved Cisco Aironet access point that requires four dual-band antennas.

Technical Specifications

Antenna Type	**Dual-Band Polarization Diverse Directional Array**	
Operating Frequency Ranges	**2.4-2.5 GHz**	**5.15-5.925 GHz**

Antenna Type	Dual-Band Polarization Diverse Directional Array	
Nominal Input Impedance	50 Ohms	50 Ohms
Voltage Standing Wave Ratio (VSWR)	2:1	2:1
Peak Gain	6 dBi	6 dBi
Polarization (Ports A & C)	Vertical	Vertical
Polarization (Ports B & D)	Horizontal	Horizontal
Nominal Elevation Plane 3-dB Beamwidth	65 Degrees	60 Degrees
Nominal Azimuth Plane 3-dB Beamwidth	65 Degrees	55 Degrees
Front-to-Back Ratio	> 12 dB	> 20 dB
Connector Type	RP-TNC (with coupling ring)	
Cable Length	3 foot	
Length	10 in. (25.4 cm)	
Width	10 in. (25.4 cm)	
Height	1.61 in. (4.1 cm)	
Weight	2.5 lbs. (1.13 kg)	
Water/Foreign Body Ingress	IP67	
Operational Wind	100 MPH	
Operating Temperature Range	-40° C to 75° C	
Storage Temperature Range	-40° C to 85° C	

Azimuth and Elevation Radiation Patterns

Figure 135: 2.4 GHz Horizontal

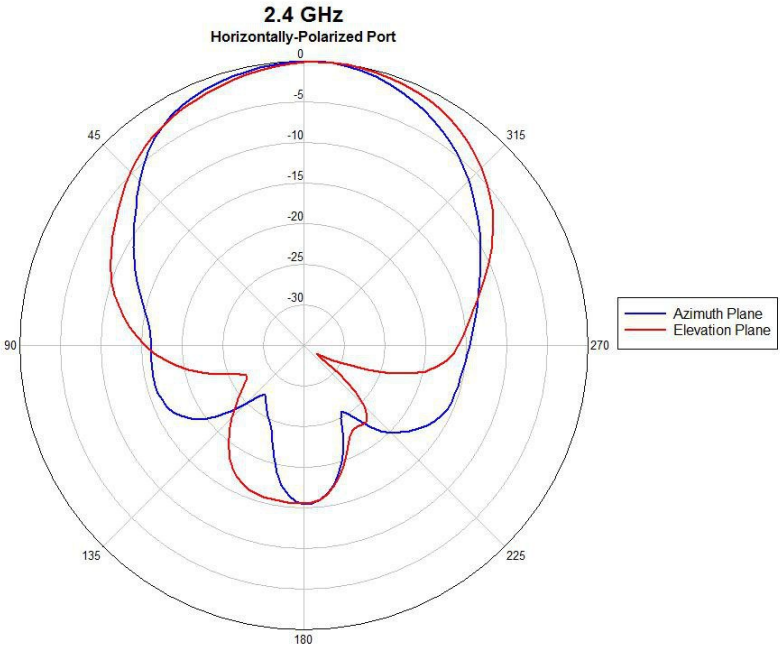

Figure 136: 2.4 GHz Vertical

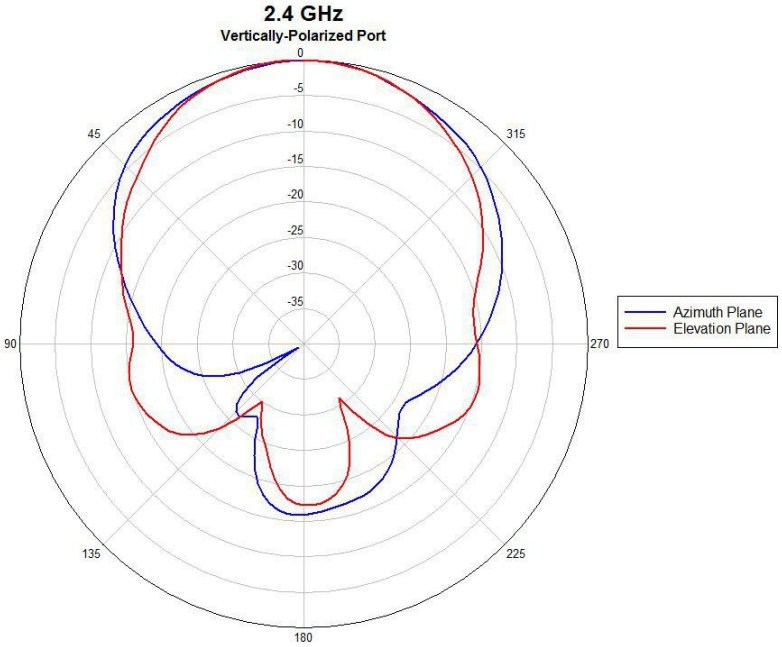

Figure 137: 5 GHz Horizontal

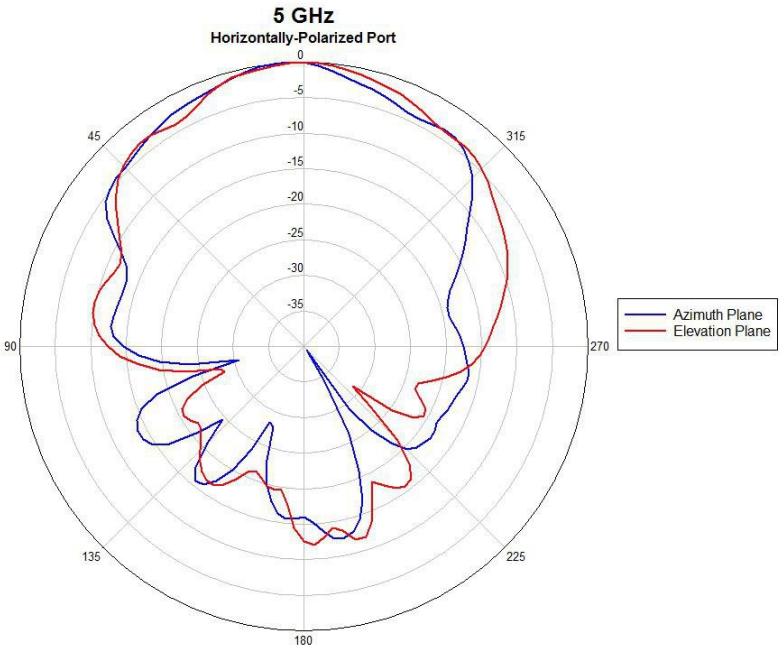

Figure 138: 5 GHz Vertical

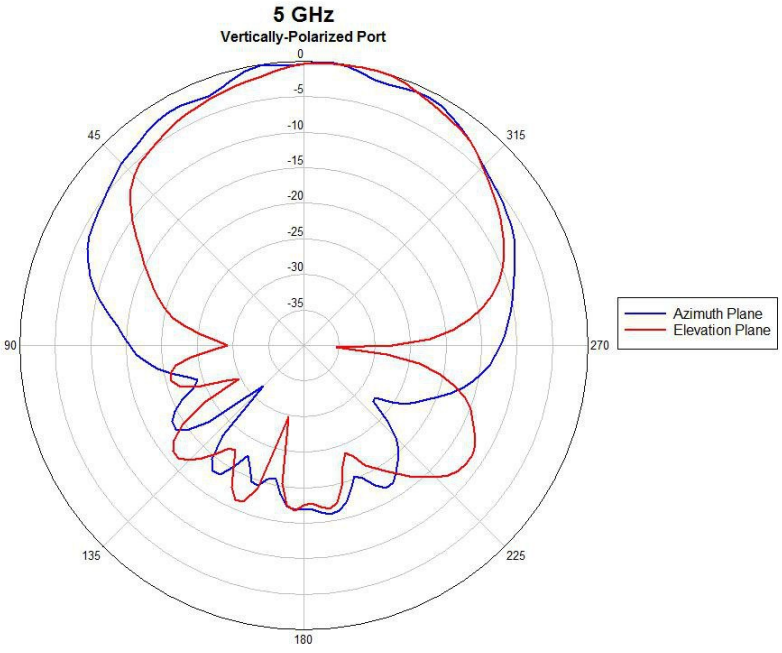

Contents of the Antenna and Bracket Kit

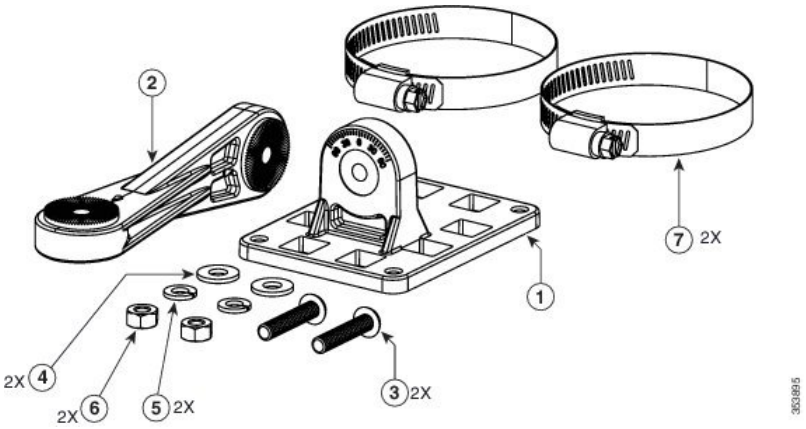

1	One of two articulating mount flanges required for the installation. The other flange comes attached to the back of the antenna.
2	Articulating mount arm.
3	1/4 20 x 1.25-inch stainless steel screws. Two are included in the kit.
4	1/4 inch flat washers. Two are included in the kit.
5	1/4-inch split-lock washers. Two are included in the kit.
6	1/4-20 Hex nuts. Two are included in the kit.
7	One of two worm-gear type hose clamps. Each has a range of 50–135mm.

Dimensions of the Antenna and Brackets

The dimensions noted in the following illustrations are all in mm, unless noted otherwise.

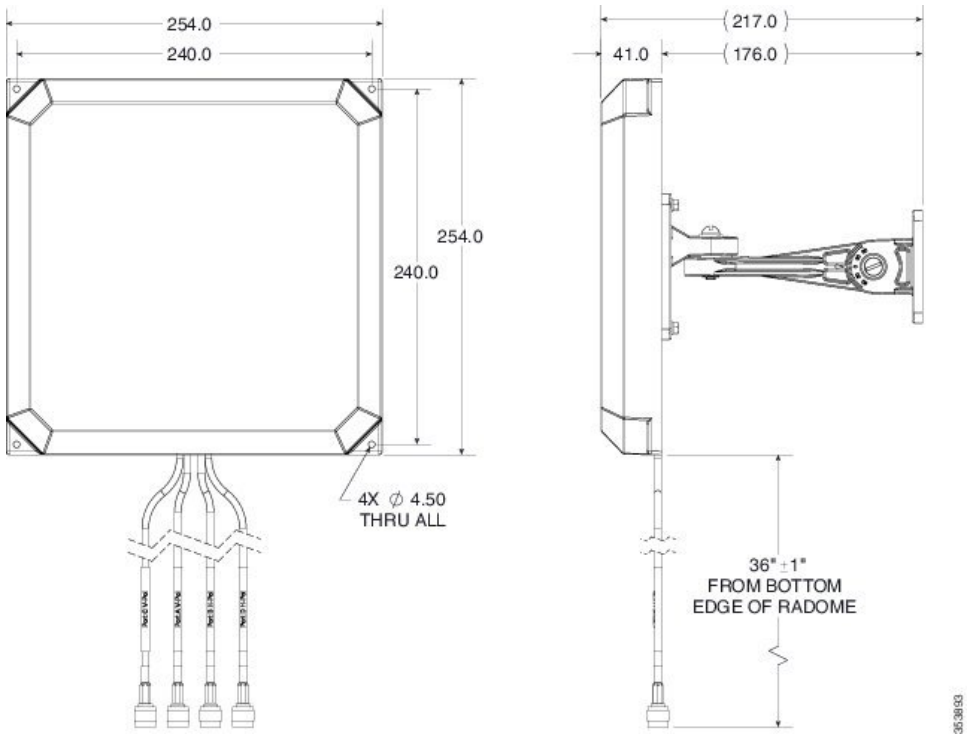
254.0
240.0
254.0
240.0
4X ∅ 4.50
THRU ALL
217.0
41.0
176.0
36" ±1"
FROM BOTTOM
EDGE OF RADOME
353893

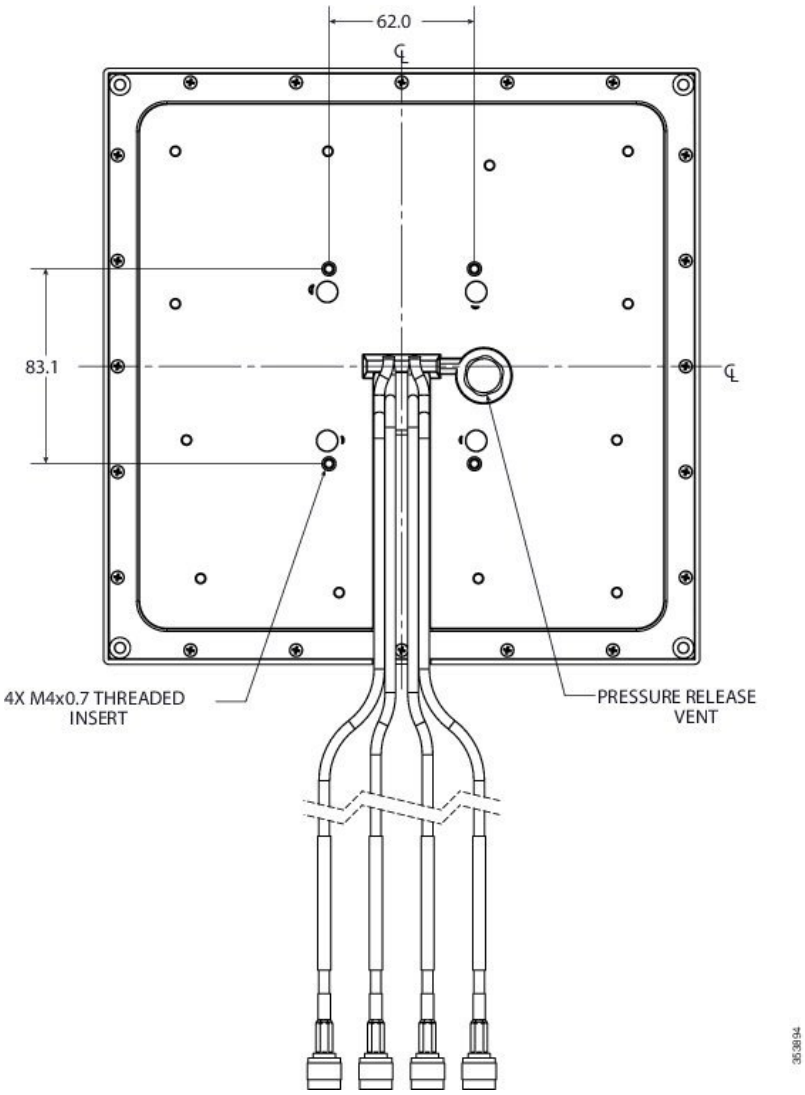
62.0
83.1
4X M4x0.7 THREADED INSERT
PRESSURE RELEASE VENT
353894

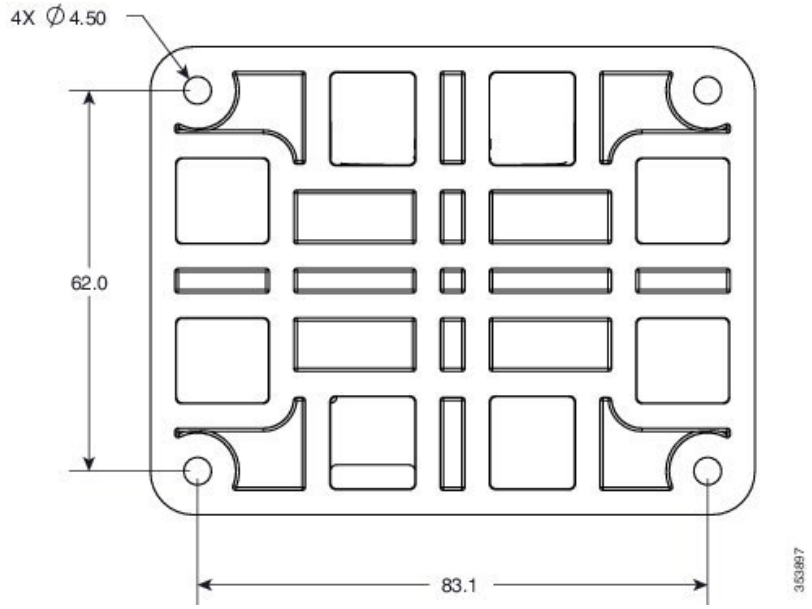

General Safety Precautions

Warning This warning symbol means danger. You are in a situation that could cause bodily injury. Before you work on any equipment, be aware of the hazards involved with electrical circuitry and be familiar with standard practices for preventing accidents. Use the statement number provided at the end of each warning to locate its translation in the translated safety warnings that accompanied this device. **Statement 1071**

Warning Do not work on the system or connect or disconnect cables during periods of lightning activity. **Statement 1001**

Warning Do not locate the outdoor antenna near overhead power lines or other electric light or power circuits, or where it can come into contact with such circuits. When installing the antenna, take extreme care not to come into contact with such circuits, as they may cause serious injury or death. For proper installation and grounding of the antenna, please refer to national and local codes (for example, U.S.:NFPA 70, National Electrical Code, Article 810, Canada:Canadian Electrical Code, Section 54). **Statement 1052**

Warning In order to comply with FCC radio frequency (RF) exposure limits, antennas should be located at a minimum of 7.9 inches (20 cm) or more from the body of all persons. **Statement 332**

Note For your safety, and to help you achieve a good installation, please read and follow these safety precautions.

Mast Mounted or Building Mounted Installations

The following instructions are common to most mast mounted or building mounted installations. For specific installation instructions for each antenna, see the antenna data-sheet and the router hardware installation guide.

- Find someone to help you—installing an antenna is often a two-person job.
- Select your installation site with safety, as well as performance, in mind. Remember that electric power lines and phone lines look alike. For your safety, assume that any overhead line can kill you.
- Contact your electric power company. Tell them your plans and ask them to come look at your proposed installation.
- Do not use a metal ladder.
- Do not work on a wet or windy day.
- Do dress properly—wear shoes with rubber soles and heels, rubber gloves, and a long-sleeved shirt or jacket.
- If the assembly starts to drop, move away from it and let it fall. Because the antenna, mast, cable, and metal guy wires are all excellent conductors of electrical current, even the slightest touch of any of these parts to a power line completes an electrical path through the antenna and the installer.
- If any part of the antenna system should come in contact with a power line, do not touch it or try to remove it yourself. Call your local power company to have it removed safely.
- If an accident should occur with the power lines, call for qualified emergency help immediately.
- Assemble your new antenna on the ground or a level surface at the installation site.
- Connect its coaxial cable while you are on the ground and attach the antenna to the mast.
- Ensure that the mast does not fall as you raise or remove it. Use a durable non-conductive rope secured at each two foot level as the mast is raised. Have an assistant tend the rope, ready to pull the mast clear of any hazards (such as power lines) should it begin to fall.
- Use the mounting bracket provided with the antenna.
- If the installation will use guy wires:
  - Install guy anchor bolts.
  - Estimate the length of guy wire and cut it before raising the mast.
  - Attach guy wires to a mast using guy rings.
  - In the case of a guyed (tall, thin mast) installation, you must have at least one assistant to hold the mast upright while the guy wires are attached and tightened to the anchor bolts.
- Attach a “DANGER” label at eye level on the mast.
- Install ground rods to remove any static electricity buildup and connect a ground wire to the mast and ground rod. Use ground rods designed for that purpose, not a spare piece of pipe.

Unused Antenna Ports

Port plugs must be installed in any unused antenna ports.

The weatherproof caps on the connectors protect the router interior from environmental elements including water, heat, cold, and dust. They are installed on unused ports before the router is shipped.

When you install a new antenna in a port with an N-connector:

- Chassis-mounted antennas—Remove the weather proof cap before installing a chassis-mounted antenna.
- External antennas—Remove weatherproof cap, then connect the supported Cisco cable to the connector.

Guidelines to Achieving Optimal RF and Antenna Performance

Antennas are a critical component of a wireless communication system. Selecting a suitable antenna, an optimal antenna location, or antenna site is essential for optimum performance of a wireless links.

This section covers general tips for optimizing RF performance of indoor and outdoor terrestrial radio systems in the 400-7125 MHz frequency range. Examples of terrestrial radio systems include 4G LTE, 5G NR, Wi-Fi, LoRa, LR-WPAN and similar. In this context GPS SPS would not be considered a terrestrial system as the signal is received from space, not from another terrestrial site.

Because the antenna transmits and receives radio signals over the air, overall RF performance of the link is susceptible to RF obstructions and common sources of RF interference that can reduce throughput and range of the system.

Follow these guidelines to optimize performance. When in doubt, consult a qualified RF professional, and check with your solution partner for specific recommendations.

Antenna Model Selection and Performance

Consider the following when planning your installation:

- When selecting the antenna, ensure that it covers the frequency ranges or frequency bands of interest, and that it has good RF parameters such as antenna efficiency, VSWR and suitable radiation pattern for every frequency range that your application will use with this antenna.
- Antenna pattern is important. Omni-directional antennas have lower gain, but allow communicating to devices in all azimuth directions. Directional antennas concentrate the beam in a specific direction, making them ideal for point to point communication.
- When a system has multiple RF ports for receive and / or transmit, as is the case for 4G LTE , 5G NR or Wi-Fi, it is highly recommended to populate all the RF ports with suitable antennas to take advantage of MIMO, rather than rely on a single port or single antenna to save on cost. Please see the MIMO section for a detailed description of MIMO benefits.
- For RF systems that support multiple RF ports and multiple RF standards such as LTE, Wi-Fi, and GPS: consider using a multi-element antenna that integrates multiple antennas under the same radome (cover). Doing so may reduce cost compared to deploying and mounting a discrete single port antenna for every RF port.
- For communication between fixed infrastructure devices, such as mesh nodes or a point-to-point backhaul link, each device should have an antenna with the same polarization. If communicating with mobile

devices that might be randomly oriented, consider dual-polarized antennas, such as those with both vertical and horizontal or slant +45° and -45° polarized elements.

Antenna Environmental Specifications

The selected antenna must have suitable mechanical and environmental specifications for the environment where it will be deployed. For example, shock and vibration specifications for transportation, corrosion resistant construction for marine and oil and gas industries, or IP (ingress protection) rating for outdoor deployment. Indoor antennas are typically not suitable for harsh industrial environments. Please check with your system integrator for environmental requirements for your application.

Antenna Accessories and Mounting

Consider the following when planning your installation:

- Carefully consider what type of other RF accessories, besides antenna, such as RF cables, lightning arrestors or RF adapters may be required in your installations. It is best to minimize long RF cable runs due to RF signal losses in the cable. Thinner RF cables have more RF loss , thicker cables are less flexible and more expensive.
- Carefully consider how the antenna will be physically mounted, as this may affect antenna selection. For example, a stud mount mechanical mounting design is a better fit for mounting on top of an electrical cabinet than a mast mount antenna.
- For outdoor deployments, follow installation instructions for the antenna. It is good practice to keep protective covers on the radio's RF ports and any antenna or accessory RF ports until the moment the interfaces are mated. This reduces chances of contamination, trapping water or condensation inside the connector, or accidental damage to RF interfaces.

MIMO Performance and Arrays

MIMO systems deliver benefits of higher SNR, higher reliability and higher throughput compared to single antenna systems. In more technical terms, MIMO delivers array gain, diversity gain and multiplexing gain compared to single antenna.

- Array gain — Improvement in SNR (signal to noise ratio) by coherently combining signals from multiple antennas. For example, increasing SNR through beamforming techniques.
- Diversity gain — Improvement in reliability by mitigating deep fading or strong destructive EM wave interference. For example, in a two-antenna system, if one antenna is experiencing deep fading due to an EM destructive null at its location at a given instant, the other antenna is unlikely to have a null at the same instant, and the combined SNR stays at a reliable level. In contrast, a single antenna would see SNR oscillating between good SNR and very poor SNR and reliability would degrade.
- Multiplexing gain — Increase in system capacity or throughput by sending independent data over multiple spatial streams simultaneously. The number of streams cannot be more than the number of antennas. For example, to support three spatial streams, a minimum of three antennas is required. Often there may be additional antennas for diversity or redundancy, such as in the case of 4x4:3, or 4x4 MIMO with 3 spatial streams.

If deploying multiple single-element antennas for a MIMO system in an array, ensure sufficient spacing between the antennas. Omnidirectional elements should generally be at least one wavelength apart at the lowest operating frequency.

Consider the following:

- For Wi-Fi systems operating in the 2.4, 5, and/or 6 GHz bands, space elements at least 5 inches (12.5 cm) apart.
- For 4G LTE and 5G systems with the lowest operating frequency of 617 MHz , space elements at least 20 inches (50 cm) apart.
- Note that spacing between elements inside multi-element MIMO antennas is often less than one wavelength. However multi-element antennas are engineered with MIMO performance in mind, by providing antenna diversity through pattern, polarization, and isolation between MIMO elements.

Antenna siting and location

Consider the following when planning your installation:

- Plan antenna location ahead of time. Ideal location for an antenna is in LOS (line of sight) of the counterpart that it is trying to communicate with. Under LOS conditions the signals propagate directly between the two communication nodes, without relying on signal bouncing off a wall or other structure to reach the counterpart. This is sometimes not possible to achieve in practice, but it is a useful goal to keep in mind when optimizing antenna location.
- While it is good to keep RF cables short, it is most desirable for an antenna to be in the best location it can be to provide the desired coverage.
- For large deployments involving multiple units communicating with each other across a complex urban or industrial landscape, consider running an RF propagation modeling study to predict approximate simulated coverage maps and determine initial placement of the units. A propagation study may help reduce overall deployment cost by discovering and mitigating issues with RF coverage before the infrastructure is physically installed.
- Keep the antenna away from metal obstructions such as heating and air-conditioning ducts, large ceiling trusses, building superstructures, and major power cabling runs. One exception is if the antenna is designed to be mounted on a ground plane. If mounting on a ground plane, mount the antenna on a flat metal surface away from adjacent obstructions.
- It is strongly recommended not to install antennas directly on the router or access point (AP), unless the router or AP is specifically engineered to directly mount the antennas. Products that are engineered for direct mounting of antennas specifically address each of the below issues.
- Reasons to mount antennas away from the router include:
  - Router location may not be optimal location for antenna to communicate with the counterpart wirelessly, so router and antenna may need to be in different locations.
  - Router may have a clutter of Ethernet cable and power cables around it, which will obstruct antenna signal.
  - A number of routers, such as the IR1835, are modular. They have plug-in RF modules for Wi-Fi , 4G LTE or 5G NR such as WP-WIFI6, P-LTEAP18-GL, P-5GS6-GL. These modules have RF connectors spaced close together, and while it is mechanically possible to install four or five antennas directly attached, this will result in significant degradation to RF performance of antennas due to mutual de-tuning between closely spaced antennas. It is strongly recommended to install antennas away from the chassis in modular cases.

- If installing an antenna indoors, consider that the density and electromagnetic properties of the materials used in the building construction determines the number of walls the signal can pass through and still maintain adequate coverage.
  - Paper and vinyl walls have very little effect on signal penetration.
  - Solid and pre-cast concrete walls limit signal penetration to one or two walls without degrading coverage.
  - Concrete and wood block walls limit signal penetration to three or four walls.
  - A signal can penetrate five or six walls constructed of drywall or wood.
  - A thick metal wall causes signals to reflect off, causing poor penetration.
  - A chain link fence or wire mesh spaced between 1 and 1 1/2 in. (2.5 and 3.8 cm) acts as a harmonic reflector that blocks a 2.4-GHz radio signal.
  - Install the antenna away from microwave ovens and 2-GHz cordless phones. These products can cause signal interference because they operate in the same frequency range as the device your antenna is connected to.

Installing the Antenna

You can install the antenna on a wall or ceiling (must be a flat surface), or on a pole with a minimum diameter of 2 inches (5.08 cm) and a maximum diameter of 5 inches (12.7 cm). The antenna and one mounting flange are connected together when shipped.

To install the antenna:

1. Decide on a mounting location.
2. Ensure that you have the requisite tools and fasteners ready. See the Tools and Equipment Required, on page 346
   .
3. Proceed with mounting the antenna. When mounting the antenna, assemble the bracket hardware, connect the antenna and bracket to the mounting surface, and adjust the antenna orientation.

The mounting options available are:

1. Mount on a wall or ceiling.
2. Mount on a pole or mast.
3. Flush mount on a wall without mount brackets.
4. (Optional) Paint the antenna.

Tools and Equipment Required

Warning The fasteners and the mounting surface should be capable of maintaining a minimum pullout force of 150 pounds (68 kg) to support the weight of the antenna and bracket along with the potential wind loading on the antenna.

Warning The pole or mast must be rigid enough to hold the weight of the antenna along with the associated forces produced by wind loads. Also, the pole or mast must be structurally strong enough to withstand the clamping force of the hose clamps.

Before you start with mounting the antenna, go through the mounting procedure for each kind of installation and ensure that you have all tools and fasteners mentioned therein ready. The following is a general list of fasteners and tools which are not included in the antenna and brackets kit.

- To loosen and tighten the adjustment bolts on the brackets, you need a flat-blade screwdriver.
- To mount the antenna on a wall or ceiling, you need four mounting 4 mm or #8 screws or bolts and wall anchors.
- To mount the antenna on a pole or mast, you will need either or both of these supplies:
  - Slotted screwdriver to tighten the screws on the hose clamps
  - A 5/16 inch (8mm) socket or box wrench
- You may also need the following tools and equipment, which are not provided as part of the kit:
  - A drill and drill bit
  - A pencil
  - A small mallet or hammer, to hammer
  - A Phillips screwdriver

Mounting on a Wall or Ceiling

Follow this procedure:

Step 1 The fasteners and mounting surface should be capable of maintaining a minimum pullout force of 150 pounds (68 kg) to support the weight of the antenna along with the potential wind loading on the antenna.

Step 2 Determine the mounting location for the antenna.

Step 3 Attach the free articulating mount flange to the wall or ceiling using four 4 mm or #8 screws and fasteners, through the holes on the bracket.

One of the two required articulating mount flange brackets come attached to the back of the antenna (**see figure in contents**). The other flange bracket, included in the kit, is the one used in this step.

Step 4 Assemble the bracket hardware, as shown in in the figure below. Use a flat blade screwdriver to tighten the 1/4 20 x 1.25" screws on the brackets

Figure 139: Exploded View of Antenna and Bracket Hardware Assembly

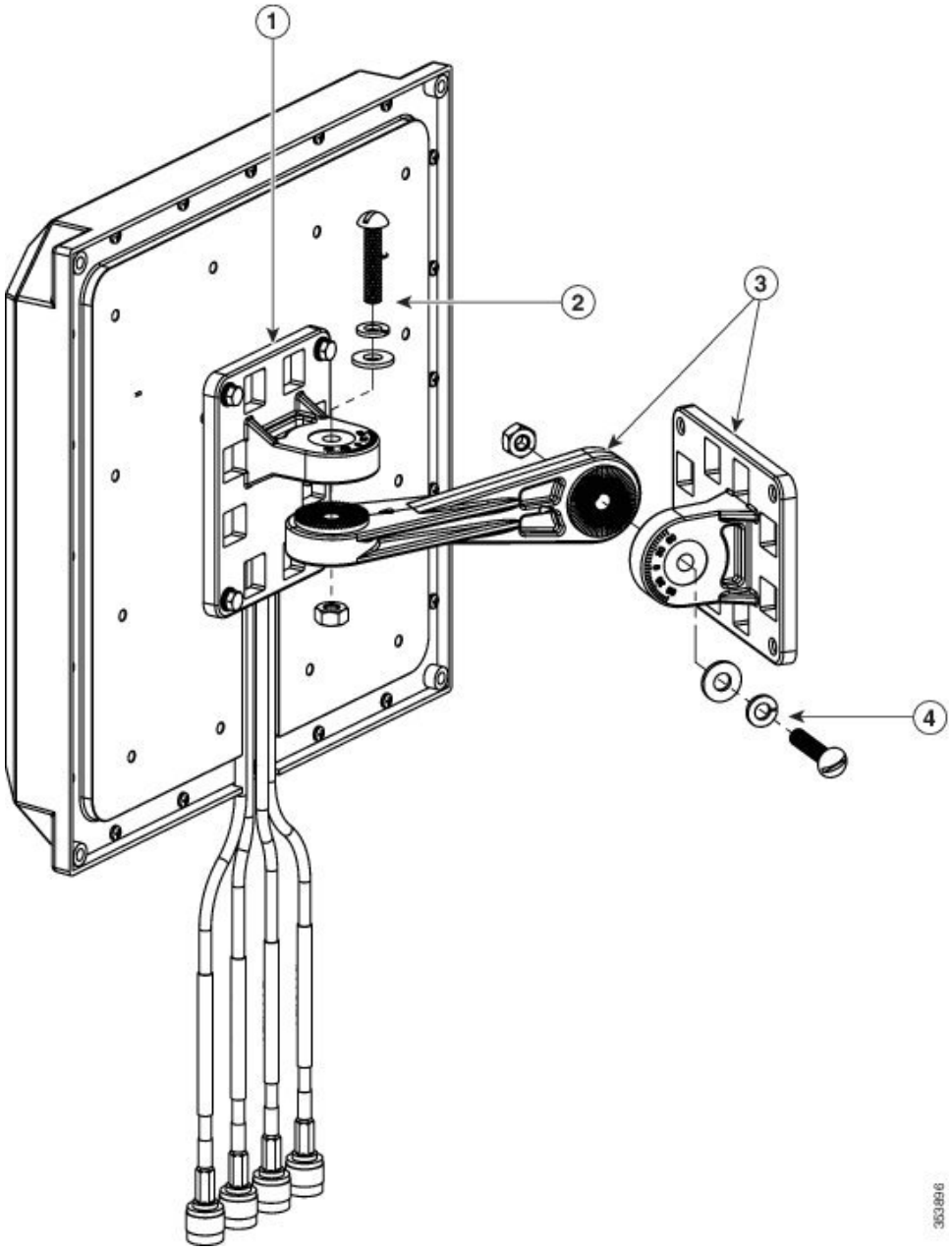

1	The articulating mount flange bracket that comes attached to the back of the antenna.
2	The azimuth adjustment pivot. Here, a 1/4 20 x 1.25-inch stainless steel screw, a 1/4-inch split-lock washer, a 1/4-inch flat washer, and a 1/4-20 Hex nut (in that order) fasten the articulating mount arm to the flange bracket at the back of the antenna.

3	The end of the articulating mount arm, which attaches to the flange bracket fixed to the wall or ceiling.
4	The elevation adjustment pivot. Here, a 1/4 20 x 1.25-inch stainless steel screw, a 1/4-inch split-lock washer, a 1/4-inch flat washer, and a 1/4-20 Hex nut (in that order) fasten the articulating mount arm to the flange bracket fixed to the wall or ceiling.

Step 5 Orient the antenna correctly (note the arrow on the back of the antenna that indicates the top of the antenna). Use a flat-blade screwdriver to loosen or tighten the fasteners at the azimuth and elevation- adjustment pivots.

Step 6 Adjust the azimuth (side-to-side position) and elevation (up-and-down position) of the antenna. Loosen the adjustment pivot bolts slightly to allow for adjustment.

The azimuth angle can be adjusted ±90 degrees.

Figure 140: Azimuth Adjustment

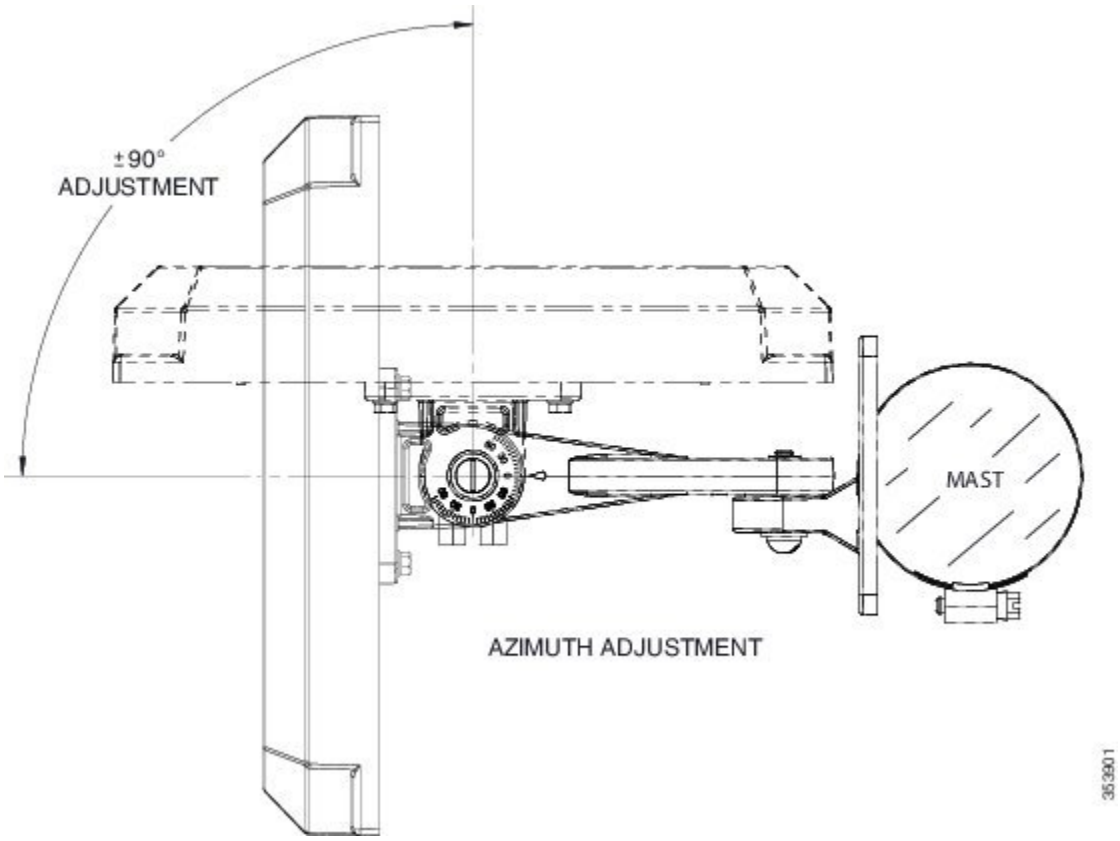

The elevation can be adjusted ±55 degrees.

Figure 141: Elevation Adjustment

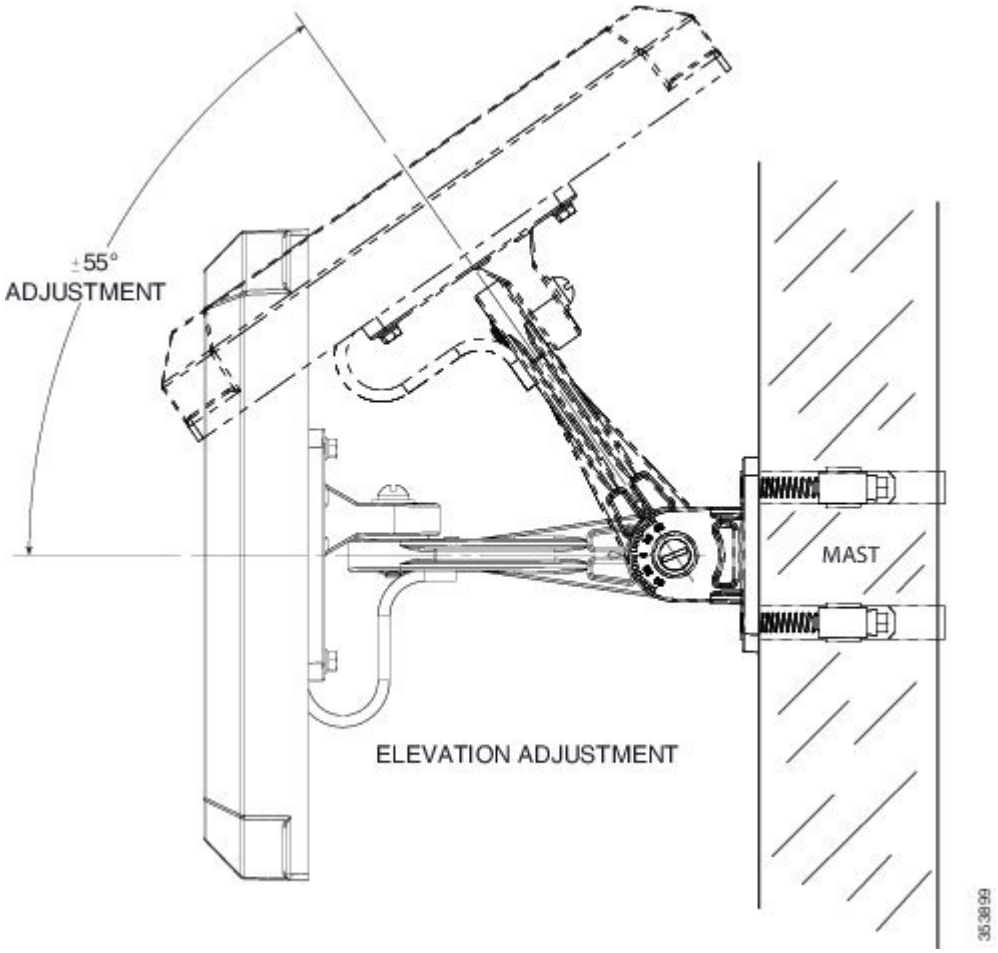

Use the azimuth and elevation markings on the articulating mounting arm and the flange brackets as a guide.

Figure 142: Close-Up View of the Azimuth and Elevation-Adjustment Pivots

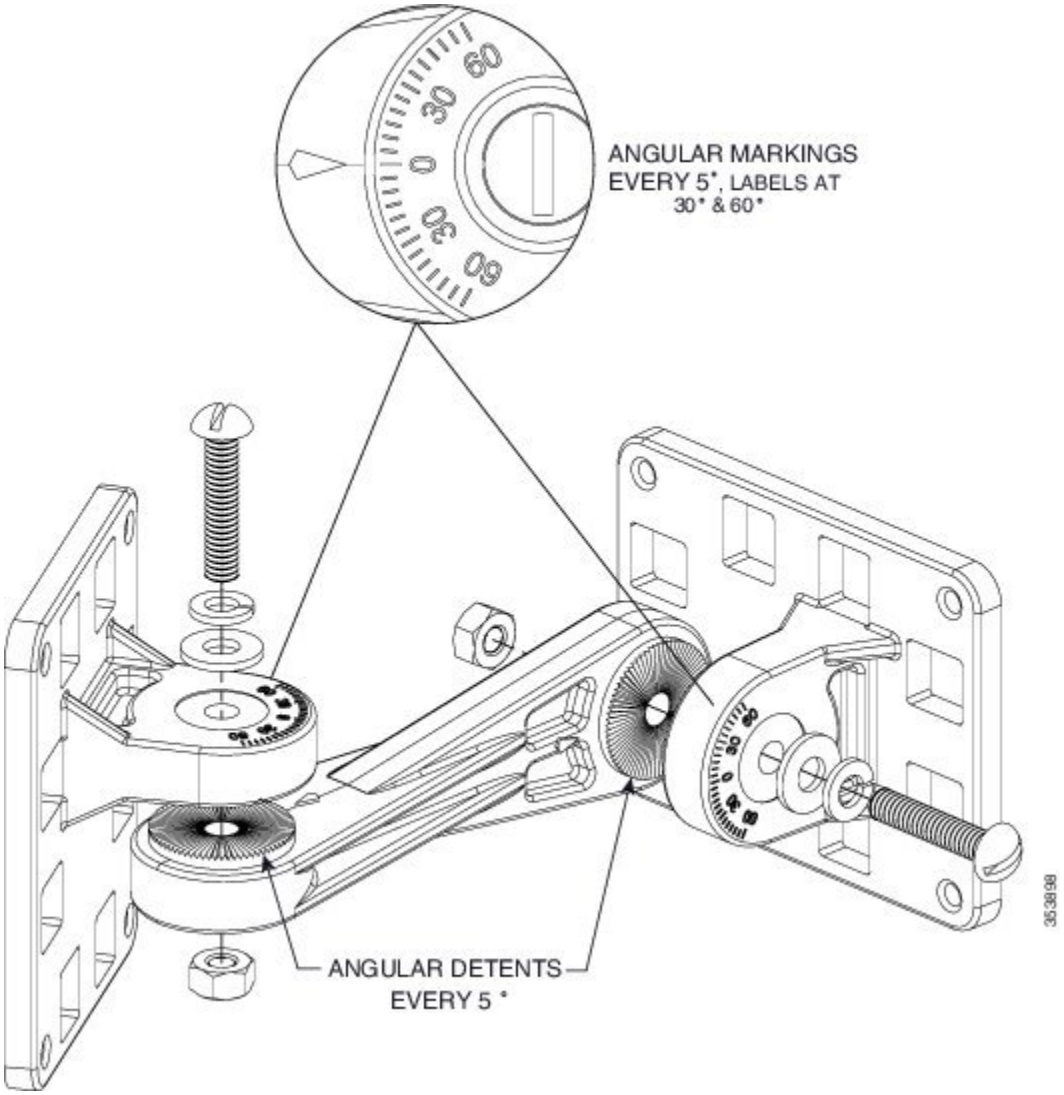

Step 7 After adjusting the antenna position, tighten the pivot bolts. Tighten all the bolts to not more than 30 lbf.in. (3.4 Nm).

Step 8 Connect the antenna cables to the access point. The antenna ports are labeled A through D. Connect the antenna port A to connector A on the access point, antenna port B to connector B on the access point, and so on.

What to do next

For the recommended cable type, see the Recommended Cable section.

Mounting on a Pole or Mast

Follow these steps:

Note The pole or mast must be rigid enough to hold the weight of an antenna along with the associated forces produced by wind loads. In addition, the mast must be structurally strong enough to withstand the clamping force of the hose clamps.

Step 1 Determine the mounting location for the antenna on the pole or mast.

Step 2 Position and mount the mounting flange bracket on to the pole or mast using the hose clamps provided in the kit. The hose clamps should pass through the slots on the free mounting flange bracket.

One of the two required articulating mount flange brackets come attached to the back of the antenna. The other flange bracket, included in the kit, is the one used in this step.

Step 3 Tighten the hose clamps only to the extent that they can hold the flange bracket and the antenna in place until the antenna is positioned at its final position. Use a slotted screwdriver to tighten the screws on the hose clamps.

Step 4 Assemble the antenna and bracket to the flange bracket.

Step 5 Position the antenna, mounting bracket, and hose clamps on the mast.

Step 6 Tighten the hose clamps until the antenna is fully secure on the mast. Ensure that the antenna cannot rotate about the mast.

Step 7 After the antenna is secured on the mast, adjust the azimuth (side-to-side position) and elevation (up-and-down position) of the antenna. Loosen the adjustment pivot bolts slightly to allow for adjustment.

Azimuth angle can be adjusted ±90 degrees (Figure 7) and elevation can be adjusted ±55 degrees (Figure 8). You can use the azimuth and elevation markings on the articulating mounting arm and the flange brackets as a guide.

Step 8 After you adjust the antenna position, tighten the adjustment bolts. Tighten all the bolts to not more than 30 lbf.in. (3.4 Nm).

Step 9 Connect the antenna cables to the access point. The antenna ports are labeled A through D. Connect the antenna port A to connector A on the access point, antenna port B to connector B on the access point, and so on.

What to do next

For the recommended cable type, see the Recommended Cable section.

Flush Mounting on a Wall Without Mount Brackets

You can flush mount the antenna on a wall. For this, you will need to discard the articulating mount flange brackets from the installation.

Note The following procedure describes how to mount the antenna on a drywall. If you intend to install your antenna on another surface other than a drywall, the following procedure may vary slightly and you should procure the necessary hardware.

1. Remove the articulating mount flange bracket that comes attached to the back of the antenna.
2. Determine the location where you will mount the antenna.

3. Use the antenna as a template to mark the location of the four mounting holes.
4. Using a drill and #29 drill bit, drill four holes at the locations you have marked. For drywall installations a #29 (0.136 inch or 45 mm) drill bit is enough. Other surfaces may require a different size.
5. Insert 8-inch plastic wall anchors into each hole.
6. Using a mallet or small hammer, properly seat the plastic anchors into the wall.
7. Align the antenna's mounting holes with the anchors.
8. Insert an 8 x 1¼-inch screw, through each mounting hole and into its anchor.
9. Tighten the screws using a Phillips screwdriver. Do not overtighten.
10. Connect the antenna cables to the access point. The antenna ports are labeled A through D. Connect the antenna port A to connector A on the access point, antenna port B to connector B on the access point, and so on.

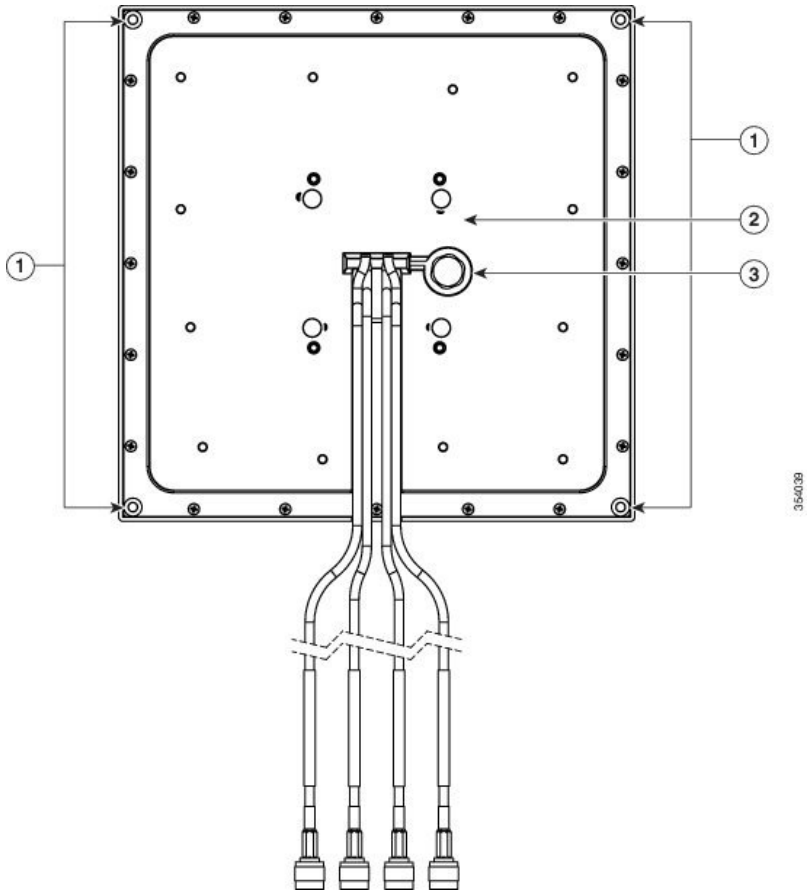

1	Screw holes for flush mounting on a wall. Each hole takes an 8 x 1¼-inch screw.
2	Spot where the preinstalled articulating flange mount was removed from.
3	Pressure release vent.

Recommended Cable

This antenna comes with four 3 foot long cables with RP-TNC connectors. If you need a longer cable reach, use AIR-CAB005LL-R= to extend the length by an additional 5 feet.

Note A coaxial cable loses efficiency as the frequency increases, resulting in signal loss. The cable should be kept as short as possible because cable length also determines the amount of signal loss (the longer the cable, the greater the loss).

Painting the Antenna

Painting the antenna and the bracket does not affect its performance if you use standard exterior-grade, oil-based, or latex paint. Do not use metallic or metallic-flake paints, which will degrade antenna performance.

Note Before painting the antenna, cover the pressure-release vent on the rear, lower-left of the antenna with masking tape to prevent clogging. Ensure that you remove the tape afterwards.

We recommend that you use Krylon Fusion for Plastic or Rust-Oleum for Plastic (which might require a primer coat). For best results, follow the surface preparation suggestions from the paint manufacturer.

Communications, Services, and Additional Information

- To receive timely, relevant information from Cisco, sign up at Cisco Profile Manager.
- To get the business impact you're looking for with the technologies that matter, visit Cisco Services.
- To submit a service request, visit Cisco Support.
- To discover and browse secure, validated enterprise-class apps, products, solutions, and services, visit Cisco DevNet.
- To obtain general networking, training, and certification titles, visit Cisco Press.
- To find warranty information for a specific product or product family, access Cisco Warranty Finder.

Cisco Bug Search Tool

Cisco Bug Search Tool (BST) is a web-based tool that acts as a gateway to the Cisco bug tracking system that maintains a comprehensive list of defects and vulnerabilities in Cisco products and software. BST provides you with detailed defect information about your products and software.

Documentation Feedback

To provide feedback about Cisco technical documentation, use the feedback form available in the right pane of every online document.

Cisco Support Community

Cisco Support Community is a forum for you to ask and answer questions, share suggestions, and collaborate with your peers. Join the forum at https://supportforums.cisco.com/index.jspa.

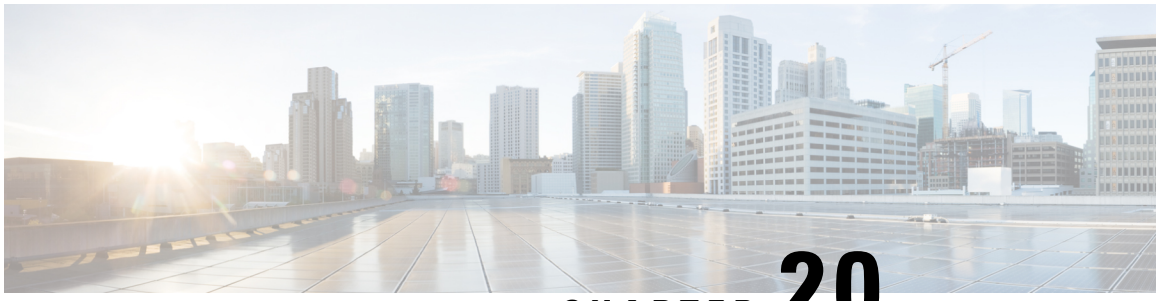

CHAPTER 20

Cisco Aironet 2.4-GHz/5-GHz MIMO 4-Element Patch Antenna (AIR-ANT2566P4W-R)

This chapter contains the following:

- Overview, on page 355
- Technical Specifications, on page 356
- Radiation Patterns, on page 357
- System Requirements, on page 358
- General Safety Precautions, on page 358
- Guidelines to Achieving Optimal RF and Antenna Performance, on page 360
- Installing the Antenna, on page 363
- Communications, Services, and Additional Information, on page 365

Overview

This section outlines the specifications for the Cisco Aironet 2.4-GHz/5-GHz MIMO 4-Element Patch Antenna (AIR-ANT2566P4W-R) and provides mounting instructions. The antenna operates in both the 2.4-GHz and 5-GHz frequency ranges and is designed for indoor and outdoor use.

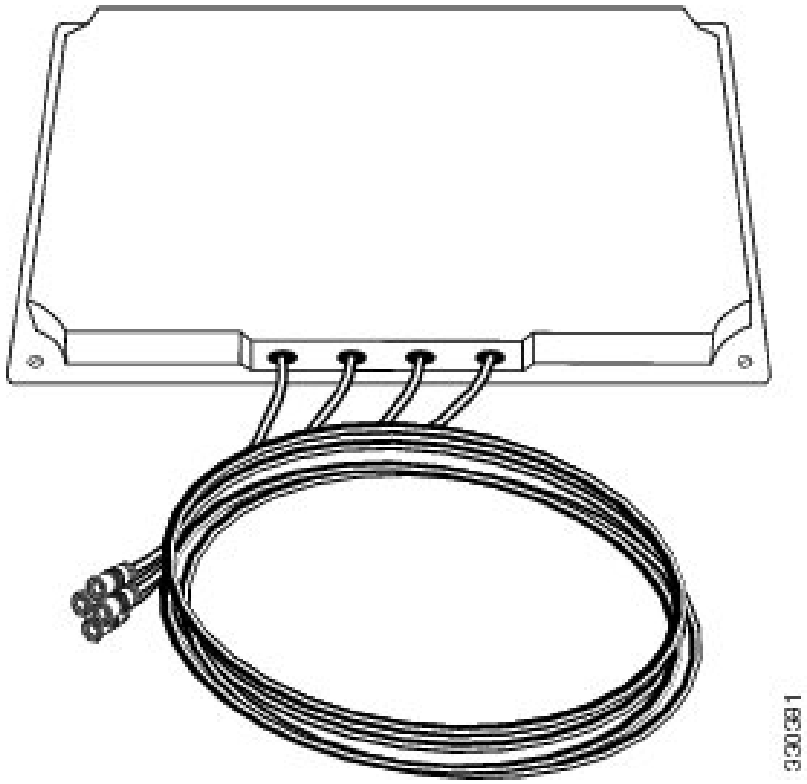

Technical Specifications

Antenna type	4-element dual-band MIMO
Operating frequency range	2400 to 2484 MHz
	5150–5850 MHz
VSWR	2:1 or less
Gain	6 dBi in both bands
Polarization	Linear, vertical
Azimuth Plane 3-dB Beamwidth	2.4 GHz band: 105°
	5 GHz band: 110°
Elevation Plane 3-dB Beamwidth	2.4 GHz band: 65°
	5 GHz band: 55°
Length	6.3 in. (16 cm)
Width	11 in. (27.9 cm)

Antenna type	4-element dual-band MIMO
Depth	1.2 in. (3.05 cm)
Weight	1.4 lbs
Cable length and type	3 foot (91.4 cm) plenum rated
Connector	RP-TNC
Environment	Indoor/outdoor
Water/Foreign Body Ingress	IP54
Operating temperature range	-40° to 158° F
	-40° to 70° C

Radiation Patterns

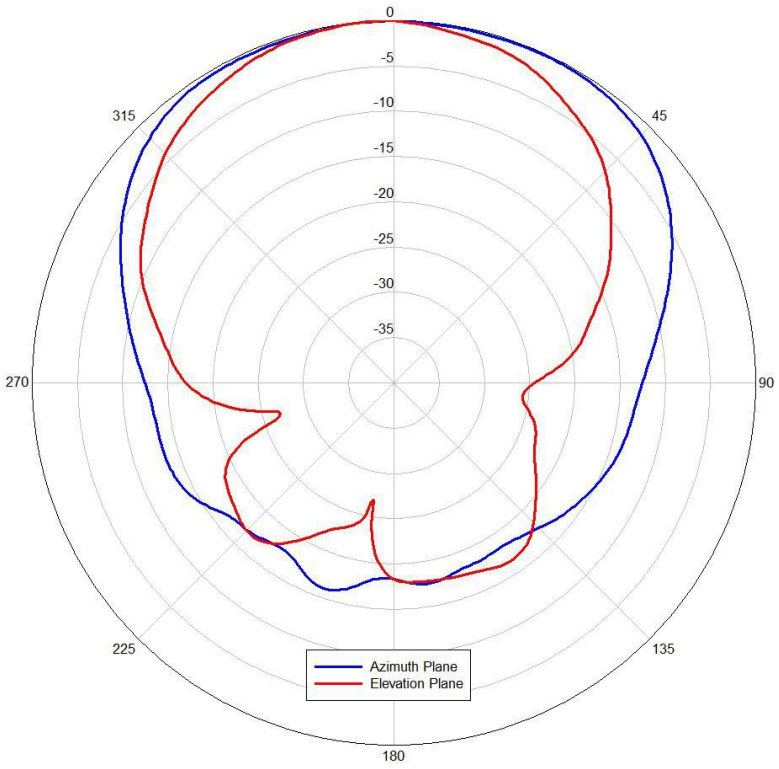

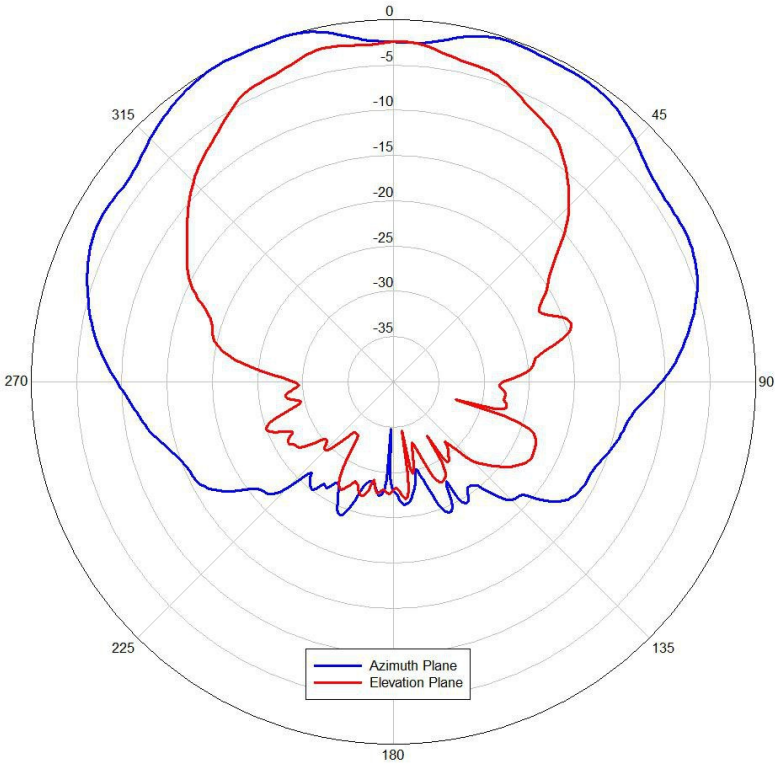

System Requirements

This antenna is designed for indoor and outdoor use with any Cisco Aironet access point that requires four (4) dual-band antennas.

General Safety Precautions

Warning This warning symbol means danger. You are in a situation that could cause bodily injury. Before you work on any equipment, be aware of the hazards involved with electrical circuitry and be familiar with standard practices for preventing accidents. Use the statement number provided at the end of each warning to locate its translation in the translated safety warnings that accompanied this device. **Statement 1071**

Warning Do not work on the system or connect or disconnect cables during periods of lightning activity. **Statement 1001**

Warning Do not locate the outdoor antenna near overhead power lines or other electric light or power circuits, or where it can come into contact with such circuits. When installing the antenna, take extreme care not to come into contact with such circuits, as they may cause serious injury or death. For proper installation and grounding of the antenna, please refer to national and local codes (for example, U.S.:NFPA 70, National Electrical Code, Article 810, Canada:Canadian Electrical Code, Section 54). **Statement 1052**

Warning In order to comply with FCC radio frequency (RF) exposure limits, antennas should be located at a minimum of 7.9 inches (20 cm) or more from the body of all persons. **Statement 332**

Note For your safety, and to help you achieve a good installation, please read and follow these safety precautions.

Mast Mounted or Building Mounted Installations

The following instructions are common to most mast mounted or building mounted installations. For specific installation instructions for each antenna, see the antenna data-sheet and the router hardware installation guide.

- Find someone to help you—installing an antenna is often a two-person job.
- Select your installation site with safety, as well as performance, in mind. Remember that electric power lines and phone lines look alike. For your safety, assume that any overhead line can kill you.
- Contact your electric power company. Tell them your plans and ask them to come look at your proposed installation.
- Do not use a metal ladder.
- Do not work on a wet or windy day.
- Do dress properly—wear shoes with rubber soles and heels, rubber gloves, and a long-sleeved shirt or jacket.
- If the assembly starts to drop, move away from it and let it fall. Because the antenna, mast, cable, and metal guy wires are all excellent conductors of electrical current, even the slightest touch of any of these parts to a power line completes an electrical path through the antenna and the installer.
- If any part of the antenna system should come in contact with a power line, do not touch it or try to remove it yourself. Call your local power company to have it removed safely.
- If an accident should occur with the power lines, call for qualified emergency help immediately.
- Assemble your new antenna on the ground or a level surface at the installation site.
- Connect its coaxial cable while you are on the ground and attach the antenna to the mast.
- Ensure that the mast does not fall as you raise or remove it. Use a durable non-conductive rope secured at each two foot level as the mast is raised. Have an assistant tend the rope, ready to pull the mast clear of any hazards (such as power lines) should it begin to fall.
- Use the mounting bracket provided with the antenna.

- If the installation will use guy wires:
  - Install guy anchor bolts.
  - Estimate the length of guy wire and cut it before raising the mast.
  - Attach guy wires to a mast using guy rings.
  - In the case of a guyed (tall, thin mast) installation, you must have at least one assistant to hold the mast upright while the guy wires are attached and tightened to the anchor bolts.
- Attach a “DANGER” label at eye level on the mast.
- Install ground rods to remove any static electricity buildup and connect a ground wire to the mast and ground rod. Use ground rods designed for that purpose, not a spare piece of pipe.

Unused Antenna Ports

Port plugs must be installed in any unused antenna ports.

The weatherproof caps on the connectors protect the router interior from environmental elements including water, heat, cold, and dust. They are installed on unused ports before the router is shipped.

When you install a new antenna in a port with an N-connector:

- Chassis-mounted antennas—Remove the weather proof cap before installing a chassis-mounted antenna.
- External antennas—Remove weatherproof cap, then connect the supported Cisco cable to the connector.

Guidelines to Achieving Optimal RF and Antenna Performance

Antennas are a critical component of a wireless communication system. Selecting a suitable antenna, an optimal antenna location, or antenna site is essential for optimum performance of a wireless links.

This section covers general tips for optimizing RF performance of indoor and outdoor terrestrial radio systems in the 400-7125 MHz frequency range. Examples of terrestrial radio systems include 4G LTE, 5G NR, Wi-Fi, LoRa, LR-WPAN and similar. In this context GPS SPS would not be considered a terrestrial system as the signal is received from space, not from another terrestrial site.

Because the antenna transmits and receives radio signals over the air, overall RF performance of the link is susceptible to RF obstructions and common sources of RF interference that can reduce throughput and range of the system.

Follow these guidelines to optimize performance. When in doubt, consult a qualified RF professional, and check with your solution partner for specific recommendations.

Antenna Model Selection and Performance

Consider the following when planning your installation:

- When selecting the antenna, ensure that it covers the frequency ranges or frequency bands of interest, and that it has good RF parameters such as antenna efficiency, VSWR and suitable radiation pattern for every frequency range that your application will use with this antenna.

- Antenna pattern is important. Omni-directional antennas have lower gain, but allow communicating to devices in all azimuth directions. Directional antennas concentrate the beam in a specific direction, making them ideal for point to point communication.
- When a system has multiple RF ports for receive and / or transmit, as is the case for 4G LTE , 5G NR or Wi-Fi, it is highly recommended to populate all the RF ports with suitable antennas to take advantage of MIMO, rather than rely on a single port or single antenna to save on cost. Please see the MIMO section for a detailed description of MIMO benefits.
- For RF systems that support multiple RF ports and multiple RF standards such as LTE, Wi-Fi, and GPS: consider using a multi-element antenna that integrates multiple antennas under the same radome (cover). Doing so may reduce cost compared to deploying and mounting a discrete single port antenna for every RF port.
- For communication between fixed infrastructure devices, such as mesh nodes or a point-to-point backhaul link, each device should have an antenna with the same polarization. If communicating with mobile devices that might be randomly oriented, consider dual-polarized antennas, such as those with both vertical and horizontal or slant +45° and -45° polarized elements.

Antenna Environmental Specifications

The selected antenna must have suitable mechanical and environmental specifications for the environment where it will be deployed. For example, shock and vibration specifications for transportation, corrosion resistant construction for marine and oil and gas industries, or IP (ingress protection) rating for outdoor deployment. Indoor antennas are typically not suitable for harsh industrial environments. Please check with your system integrator for environmental requirements for your application.

Antenna Accessories and Mounting

Consider the following when planning your installation:

- Carefully consider what type of other RF accessories, besides antenna, such as RF cables, lightning arrestors or RF adapters may be required in your installations. It is best to minimize long RF cable runs due to RF signal losses in the cable. Thinner RF cables have more RF loss , thicker cables are less flexible and more expensive.
- Carefully consider how the antenna will be physically mounted, as this may affect antenna selection. For example, a stud mount mechanical mounting design is a better fit for mounting on top of an electrical cabinet than a mast mount antenna.
- For outdoor deployments, follow installation instructions for the antenna. It is good practice to keep protective covers on the radio’s RF ports and any antenna or accessory RF ports until the moment the interfaces are mated. This reduces chances of contamination, trapping water or condensation inside the connector, or accidental damage to RF interfaces.

MIMO Performance and Arrays

MIMO systems deliver benefits of higher SNR, higher reliability and higher throughput compared to single antenna systems. In more technical terms, MIMO delivers array gain, diversity gain and multiplexing gain compared to single antenna.

- Array gain — Improvement in SNR (signal to noise ratio) by coherently combining signals from multiple antennas. For example, increasing SNR through beamforming techniques.

- Diversity gain — Improvement in reliability by mitigating deep fading or strong destructive EM wave interference. For example, in a two-antenna system, if one antenna is experiencing deep fading due to an EM destructive null at its location at a given instant, the other antenna is unlikely to have a null at the same instant, and the combined SNR stays at a reliable level. In contrast, a single antenna would see SNR oscillating between good SNR and very poor SNR and reliability would degrade.
- Multiplexing gain — Increase in system capacity or throughput by sending independent data over multiple spatial streams simultaneously. The number of streams cannot be more than the number of antennas. For example, to support three spatial streams, a minimum of three antennas is required. Often there may be additional antennas for diversity or redundancy, such as in the case of 4x4:3, or 4x4 MIMO with 3 spatial streams.

If deploying multiple single-element antennas for a MIMO system in an array, ensure sufficient spacing between the antennas. Omnidirectional elements should generally be at least one wavelength apart at the lowest operating frequency.

Consider the following:

- For Wi-Fi systems operating in the 2.4, 5, and/or 6 GHz bands, space elements at least 5 inches (12.5 cm) apart.
- For 4G LTE and 5G systems with the lowest operating frequency of 617 MHz , space elements at least 20 inches (50 cm) apart.
- Note that spacing between elements inside multi-element MIMO antennas is often less than one wavelength. However multi-element antennas are engineered with MIMO performance in mind, by providing antenna diversity through pattern, polarization, and isolation between MIMO elements.

Antenna siting and location

Consider the following when planning your installation:

- Plan antenna location ahead of time. Ideal location for an antenna is in LOS (line of sight) of the counterpart that it is trying to communicate with. Under LOS conditions the signals propagate directly between the two communication nodes, without relying on signal bouncing off a wall or other structure to reach the counterpart. This is sometimes not possible to achieve in practice, but it is a useful goal to keep in mind when optimizing antenna location.
- While it is good to keep RF cables short, it is most desirable for an antenna to be in the best location it can be to provide the desired coverage.
- For large deployments involving multiple units communicating with each other across a complex urban or industrial landscape, consider running an RF propagation modeling study to predict approximate simulated coverage maps and determine initial placement of the units. A propagation study may help reduce overall deployment cost by discovering and mitigating issues with RF coverage before the infrastructure is physically installed.
- Keep the antenna away from metal obstructions such as heating and air-conditioning ducts, large ceiling trusses, building superstructures, and major power cabling runs. One exception is if the antenna is designed to be mounted on a ground plane. If mounting on a ground plane, mount the antenna on a flat metal surface away from adjacent obstructions.
- It is strongly recommended not to install antennas directly on the router or access point (AP), unless the router or AP is specifically engineered to directly mount the antennas. Products that are engineered for direct mounting of antennas specifically address each of the below issues.

- Reasons to mount antennas away from the router include:
  - Router location may not be optimal location for antenna to communicate with the counterpart wirelessly, so router and antenna may need to be in different locations.
  - Router may have a clutter of Ethernet cable and power cables around it, which will obstruct antenna signal.
  - A number of routers, such as the IR1835, are modular. They have plug-in RF modules for Wi-Fi , 4G LTE or 5G NR such as WP-WIFI6, P-LTEAP18-GL, P-5GS6-GL. These modules have RF connectors spaced close together, and while it is mechanically possible to install four or five antennas directly attached, this will result in significant degradation to RF performance of antennas due to mutual de-tuning between closely spaced antennas. It is strongly recommended to install antennas away from the chassis in modular cases.
- If installing an antenna indoors, consider that the density and electromagnetic properties of the materials used in the building construction determines the number of walls the signal can pass through and still maintain adequate coverage.
  - Paper and vinyl walls have very little effect on signal penetration.
  - Solid and pre-cast concrete walls limit signal penetration to one or two walls without degrading coverage.
  - Concrete and wood block walls limit signal penetration to three or four walls.
  - A signal can penetrate five or six walls constructed of drywall or wood.
  - A thick metal wall causes signals to reflect off, causing poor penetration.
  - A chain link fence or wire mesh spaced between 1 and 1 1/2 in. (2.5 and 3.8 cm) acts as a harmonic reflector that blocks a 2.4-GHz radio signal.
  - Install the antenna away from microwave ovens and 2-GHz cordless phones. These products can cause signal interference because they operate in the same frequency range as the device your antenna is connected to.

Installing the Antenna

You can install the antenna on any wall. If you intend to install your antenna on another surface, you must provide the appropriate hardware.

Note Four mounting screws are provided to mount the antenna. To ensure a safe, reliable, and long-standing installation, you must use all four screws to mount the antenna.

Tools and Equipment Required

A mounting installation kit is shipped with the antenna and consists of the following hardware:

- Four #8 x 1¼ screws

- Four #8 plastic anchors
- Four end caps

You may need the following tools and equipment, which are not provided.

- A Phillips screwdriver
- A drill
- A #29 (0.136-in. (s.45 mm)) drill bit (for drywall installation, other surfaces may require a different size).
- A pencil
- A small mallet or hammer

Mounting on a Vertical Surface

Follow these steps to mount your antenna on a vertical surface. This procedure describes mounting the antenna on a drywall surface. If you are mounting the antenna on any other type of surface, your procedure may vary slightly.

1. Determine the location where you will mount the antenna.
2. Use the antenna as a template to mark the location of the four mounting holes.
3. Use a drill and #29 drill bit to drill four holes at the locations you marked.
4. Start a plastic anchor into each hole.
5. Use a mallet or small hammer to seat the anchors into the wall.
6. Align the antenna's mounting holes with the anchors.
7. Start a #8 x 1¼ screw into each antenna mounting hole.
8. Use a Phillips screwdriver to secure the antenna to the wall. Do not overtighten.
9. Install the end caps into the antenna mounting holes.
10. Remove the yellow outdoor installation warning label from the antenna radome.

Outdoor Installations

You can mount this antenna outdoors. If you mount the antenna outdoors, you must provide the mounting hardware. For outdoor installations, follow the instructions printed on the back of the antenna.

⚠

Caution An orientation arrow is printed on the back of the antenna that indicates the proper orientation for the antenna for outdoor installations. You must install the antenna so the arrow points up to prevent any water intrusion and to provide a drain for any moisture that may accumulate inside the antenna.

Suggested Cable

Cisco recommends a high-quality, low-loss cable for use with the antenna.

Note Coaxial cable loses efficiency as the frequency increases, resulting in signal loss. The cable should be kept as short as possible, because cable length also determines the amount of signal loss (the longer the run, the greater the loss).

Communications, Services, and Additional Information

- To receive timely, relevant information from Cisco, sign up at Cisco Profile Manager.
- To get the business impact you're looking for with the technologies that matter, visit Cisco Services.
- To submit a service request, visit Cisco Support.
- To discover and browse secure, validated enterprise-class apps, products, solutions, and services, visit Cisco DevNet.
- To obtain general networking, training, and certification titles, visit Cisco Press.
- To find warranty information for a specific product or product family, access Cisco Warranty Finder.

Cisco Bug Search Tool

Cisco Bug Search Tool (BST) is a web-based tool that acts as a gateway to the Cisco bug tracking system that maintains a comprehensive list of defects and vulnerabilities in Cisco products and software. BST provides you with detailed defect information about your products and software.

Documentation Feedback

To provide feedback about Cisco technical documentation, use the feedback form available in the right pane of every online document.

Cisco Support Community

Cisco Support Community is a forum for you to ask and answer questions, share suggestions, and collaborate with your peers. Join the forum at https://supportforums.cisco.com/index.jspa.

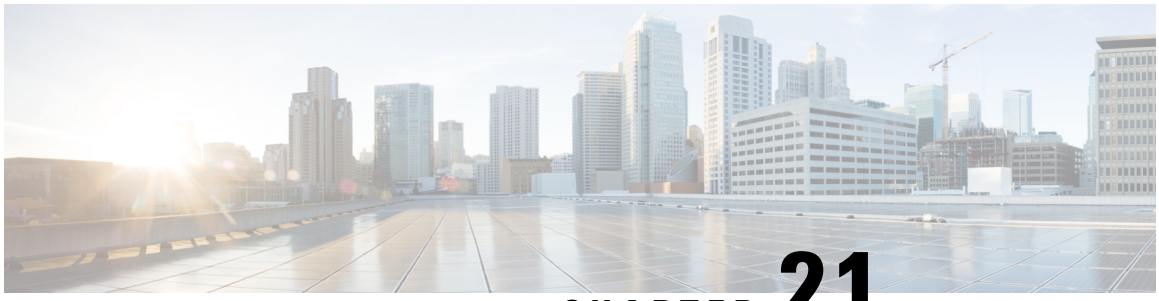

CHAPTER 21

Cisco Aironet Dual-Band Omni-Directional Antenna (AIR-ANT2568VG-N)

This chapter contains the following:

- Overview, on page 367
- Technical Specifications, on page 368
- Radiation Patterns, on page 369
- System Requirements, on page 371
- General Safety Precautions, on page 371
- Guidelines to Achieving Optimal RF and Antenna Performance, on page 373
- Installation Notes, on page 376
- Communications, Services, and Additional Information, on page 377

Overview

This section the Cisco Aironet AIR-ANT2568VG-N dual-band omni-directional antenna, and provides specifications and mounting instructions. The antenna is designed for outdoor use with Cisco Aironet Outdoor Access Points with radios operating in the 2.4 GHz and 5 GHz frequency bands.

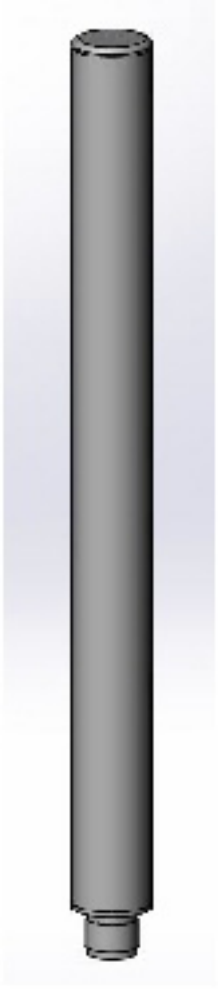

Technical Specifications

Antenna Type	Omni-directional
Operating Frequency Range	2400–2483 MHz; 5150–5925 MHz
VSWR	1.5:1 (2400–2483 MHz) 2:1 (5150–5925 MHz)
Nominal Input Impedance	50 Ohms
Gain	6 dBi (2400–2483 MHz) 8 dBi (5150–5925 MHz)
Polarization	Vertical
Azimuth Plane Ripple	2 dB (Max)

Antenna Type	Omni-directional
Elevation Plane 3 dB Beamwidth	24° (2400–2483 MHz) 11° (5150–5925 MHz)
Azimuth Plane 3 dB Beamwidth	Omni-directional
Length	14.8 in (377 mm)
Diameter	1.25 in (31.75 mm)
Weight	7.2 oz. (204.1 g)
Connector	N-Male
Operational Temperature	-22–158°F (-30–70°C)
Storage Temperature	-40–185°F (-40–85°C)
Water/Foreign Body Ingress	IP67
Wind Rating (Operational)	100 mph (161 kph)
Wind Rating (Survival)	136 mph (218 kph)

Radiation Patterns

Figure 143: Azimuth Radiation Pattern (2.4 GHz)

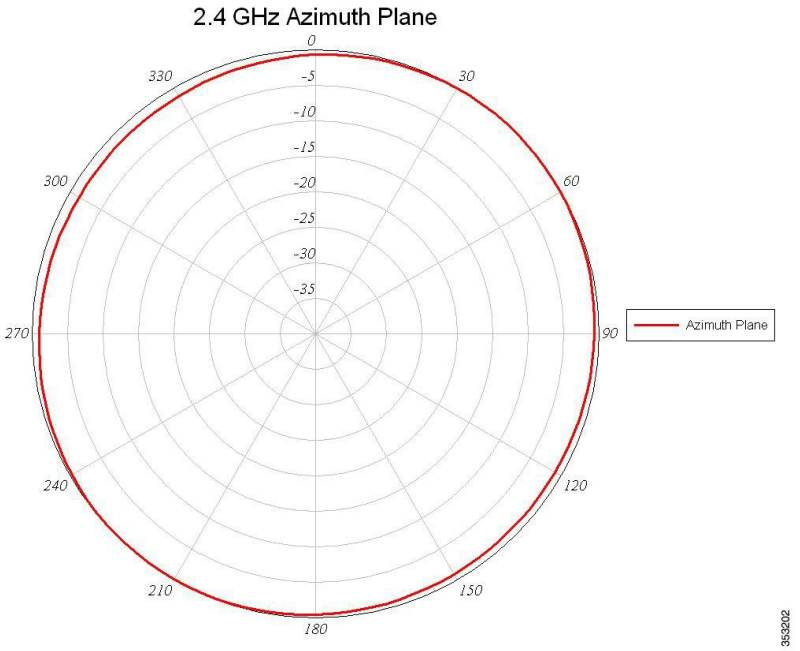

Figure 144: Elevation Radiation Pattern (2.4 GHz)

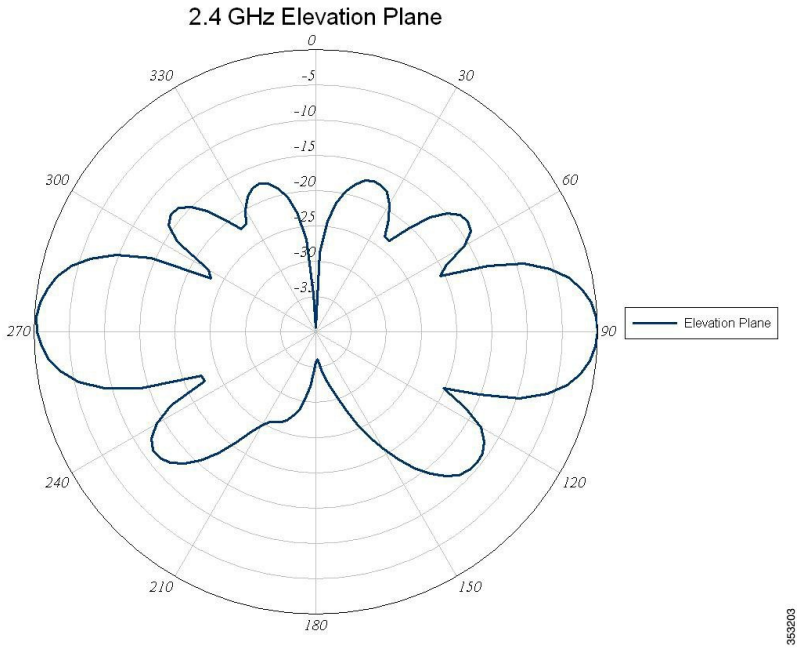

Figure 145: Azimuth Radiation Pattern (5 GHz)

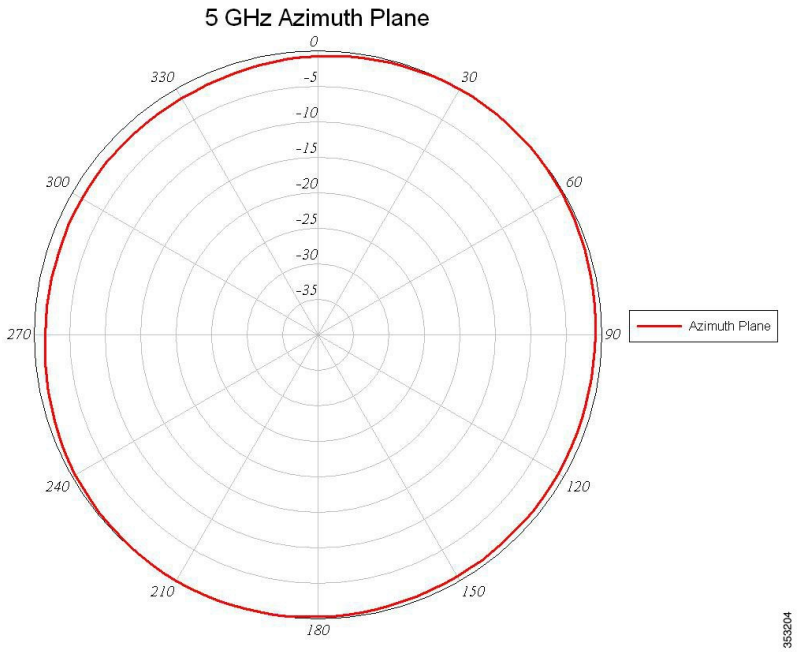

Figure 146: Elevation Radiation Pattern (5 GHz)

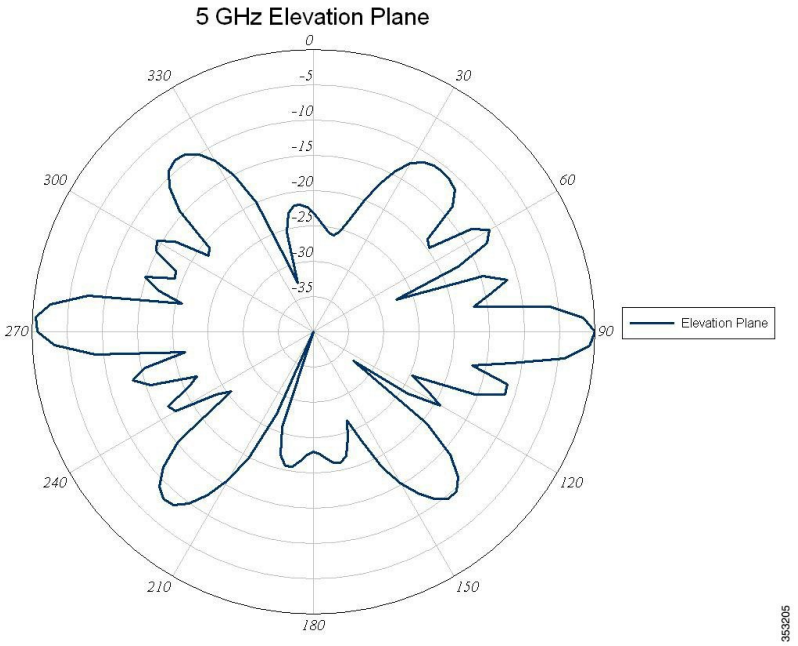

System Requirements

This antenna is designed for use with the Cisco Aironet Outdoor Access Points.

General Safety Precautions

Warning This warning symbol means danger. You are in a situation that could cause bodily injury. Before you work on any equipment, be aware of the hazards involved with electrical circuitry and be familiar with standard practices for preventing accidents. Use the statement number provided at the end of each warning to locate its translation in the translated safety warnings that accompanied this device. **Statement 1071**

Warning Do not work on the system or connect or disconnect cables during periods of lightning activity. **Statement 1001**

Warning Do not locate the outdoor antenna near overhead power lines or other electric light or power circuits, or where it can come into contact with such circuits. When installing the antenna, take extreme care not to come into contact with such circuits, as they may cause serious injury or death. For proper installation and grounding of the antenna, please refer to national and local codes (for example, U.S.:NFPA 70, National Electrical Code, Article 810, Canada:Canadian Electrical Code, Section 54). **Statement 1052**

Warning In order to comply with FCC radio frequency (RF) exposure limits, antennas should be located at a minimum of 7.9 inches (20 cm) or more from the body of all persons. **Statement 332**

Note For your safety, and to help you achieve a good installation, please read and follow these safety precautions.

Mast Mounted or Building Mounted Installations

The following instructions are common to most mast mounted or building mounted installations. For specific installation instructions for each antenna, see the antenna data-sheet and the router hardware installation guide.

- Find someone to help you—installing an antenna is often a two-person job.
- Select your installation site with safety, as well as performance, in mind. Remember that electric power lines and phone lines look alike. For your safety, assume that any overhead line can kill you.
- Contact your electric power company. Tell them your plans and ask them to come look at your proposed installation.
- Do not use a metal ladder.
- Do not work on a wet or windy day.
- Do dress properly—wear shoes with rubber soles and heels, rubber gloves, and a long-sleeved shirt or jacket.
- If the assembly starts to drop, move away from it and let it fall. Because the antenna, mast, cable, and metal guy wires are all excellent conductors of electrical current, even the slightest touch of any of these parts to a power line completes an electrical path through the antenna and the installer.
- If any part of the antenna system should come in contact with a power line, do not touch it or try to remove it yourself. Call your local power company to have it removed safely.
- If an accident should occur with the power lines, call for qualified emergency help immediately.
- Assemble your new antenna on the ground or a level surface at the installation site.
- Connect its coaxial cable while you are on the ground and attach the antenna to the mast.
- Ensure that the mast does not fall as you raise or remove it. Use a durable non-conductive rope secured at each two foot level as the mast is raised. Have an assistant tend the rope, ready to pull the mast clear of any hazards (such as power lines) should it begin to fall.
- Use the mounting bracket provided with the antenna.
- If the installation will use guy wires:
    - Install guy anchor bolts.
    - Estimate the length of guy wire and cut it before raising the mast.
    - Attach guy wires to a mast using guy rings.
    - In the case of a guyed (tall, thin mast) installation, you must have at least one assistant to hold the mast upright while the guy wires are attached and tightened to the anchor bolts.

- Attach a “DANGER” label at eye level on the mast.
- Install ground rods to remove any static electricity buildup and connect a ground wire to the mast and ground rod. Use ground rods designed for that purpose, not a spare piece of pipe.

Unused Antenna Ports

Port plugs must be installed in any unused antenna ports.

The weatherproof caps on the connectors protect the router interior from environmental elements including water, heat, cold, and dust. They are installed on unused ports before the router is shipped.

When you install a new antenna in a port with an N-connector:

- Chassis-mounted antennas—Remove the weather proof cap before installing a chassis-mounted antenna.
- External antennas—Remove weatherproof cap, then connect the supported Cisco cable to the connector.

Guidelines to Achieving Optimal RF and Antenna Performance

Antennas are a critical component of a wireless communication system. Selecting a suitable antenna, an optimal antenna location, or antenna site is essential for optimum performance of a wireless links.

This section covers general tips for optimizing RF performance of indoor and outdoor terrestrial radio systems in the 400-7125 MHz frequency range. Examples of terrestrial radio systems include 4G LTE, 5G NR, Wi-Fi, LoRa, LR-WPAN and similar. In this context GPS SPS would not be considered a terrestrial system as the signal is received from space, not from another terrestrial site.

Because the antenna transmits and receives radio signals over the air, overall RF performance of the link is susceptible to RF obstructions and common sources of RF interference that can reduce throughput and range of the system.

Follow these guidelines to optimize performance. When in doubt, consult a qualified RF professional, and check with your solution partner for specific recommendations.

Antenna Model Selection and Performance

Consider the following when planning your installation:

- When selecting the antenna, ensure that it covers the frequency ranges or frequency bands of interest, and that it has good RF parameters such as antenna efficiency, VSWR and suitable radiation pattern for every frequency range that your application will use with this antenna.
- Antenna pattern is important. Omni-directional antennas have lower gain, but allow communicating to devices in all azimuth directions. Directional antennas concentrate the beam in a specific direction, making them ideal for point to point communication.
- When a system has multiple RF ports for receive and / or transmit, as is the case for 4G LTE , 5G NR or Wi-Fi, it is highly recommended to populate all the RF ports with suitable antennas to take advantage of MIMO, rather than rely on a single port or single antenna to save on cost. Please see the MIMO section for a detailed description of MIMO benefits.
- For RF systems that support multiple RF ports and multiple RF standards such as LTE, Wi-Fi, and GPS: consider using a multi-element antenna that integrates multiple antennas under the same radome (cover).

Doing so may reduce cost compared to deploying and mounting a discrete single port antenna for every RF port.

- For communication between fixed infrastructure devices, such as mesh nodes or a point-to-point backhaul link, each device should have an antenna with the same polarization. If communicating with mobile devices that might be randomly oriented, consider dual-polarized antennas, such as those with both vertical and horizontal or slant +45° and -45° polarized elements.

Antenna Environmental Specifications

The selected antenna must have suitable mechanical and environmental specifications for the environment where it will be deployed. For example, shock and vibration specifications for transportation, corrosion resistant construction for marine and oil and gas industries, or IP (ingress protection) rating for outdoor deployment. Indoor antennas are typically not suitable for harsh industrial environments. Please check with your system integrator for environmental requirements for your application.

Antenna Accessories and Mounting

Consider the following when planning your installation:

- Carefully consider what type of other RF accessories, besides antenna, such as RF cables, lightning arrestors or RF adapters may be required in your installations. It is best to minimize long RF cable runs due to RF signal losses in the cable. Thinner RF cables have more RF loss , thicker cables are less flexible and more expensive.
- Carefully consider how the antenna will be physically mounted, as this may affect antenna selection. For example, a stud mount mechanical mounting design is a better fit for mounting on top of an electrical cabinet than a mast mount antenna.
- For outdoor deployments, follow installation instructions for the antenna. It is good practice to keep protective covers on the radio's RF ports and any antenna or accessory RF ports until the moment the interfaces are mated. This reduces chances of contamination, trapping water or condensation inside the connector, or accidental damage to RF interfaces.

MIMO Performance and Arrays

MIMO systems deliver benefits of higher SNR, higher reliability and higher throughput compared to single antenna systems. In more technical terms, MIMO delivers array gain, diversity gain and multiplexing gain compared to single antenna.

- Array gain — Improvement in SNR (signal to noise ratio) by coherently combining signals from multiple antennas. For example, increasing SNR through beamforming techniques.
- Diversity gain — Improvement in reliability by mitigating deep fading or strong destructive EM wave interference. For example, in a two-antenna system, if one antenna is experiencing deep fading due to an EM destructive null at its location at a given instant, the other antenna is unlikely to have a null at the same instant, and the combined SNR stays at a reliable level. In contrast, a single antenna would see SNR oscillating between good SNR and very poor SNR and reliability would degrade.
- Multiplexing gain — Increase in system capacity or throughput by sending independent data over multiple spatial streams simultaneously. The number of streams cannot be more than the number of antennas. For example, to support three spatial streams, a minimum of three antennas is required. Often there may be additional antennas for diversity or redundancy, such as in the case of 4x4:3, or 4x4 MIMO with 3 spatial streams.

If deploying multiple single-element antennas for a MIMO system in an array, ensure sufficient spacing between the antennas. Omnidirectional elements should generally be at least one wavelength apart at the lowest operating frequency.

Consider the following:

- For Wi-Fi systems operating in the 2.4, 5, and/or 6 GHz bands, space elements at least 5 inches (12.5 cm) apart.
- For 4G LTE and 5G systems with the lowest operating frequency of 617 MHz , space elements at least 20 inches (50 cm) apart.
- Note that spacing between elements inside multi-element MIMO antennas is often less than one wavelength. However multi-element antennas are engineered with MIMO performance in mind, by providing antenna diversity through pattern, polarization, and isolation between MIMO elements.

Antenna siting and location

Consider the following when planning your installation:

- Plan antenna location ahead of time. Ideal location for an antenna is in LOS (line of sight) of the counterpart that it is trying to communicate with. Under LOS conditions the signals propagate directly between the two communication nodes, without relying on signal bouncing off a wall or other structure to reach the counterpart. This is sometimes not possible to achieve in practice, but it is a useful goal to keep in mind when optimizing antenna location.
- While it is good to keep RF cables short, it is most desirable for an antenna to be in the best location it can be to provide the desired coverage.
- For large deployments involving multiple units communicating with each other across a complex urban or industrial landscape, consider running an RF propagation modeling study to predict approximate simulated coverage maps and determine initial placement of the units. A propagation study may help reduce overall deployment cost by discovering and mitigating issues with RF coverage before the infrastructure is physically installed.
- Keep the antenna away from metal obstructions such as heating and air-conditioning ducts, large ceiling trusses, building superstructures, and major power cabling runs. One exception is if the antenna is designed to be mounted on a ground plane. If mounting on a ground plane, mount the antenna on a flat metal surface away from adjacent obstructions.
- It is strongly recommended not to install antennas directly on the router or access point (AP), unless the router or AP is specifically engineered to directly mount the antennas. Products that are engineered for direct mounting of antennas specifically address each of the below issues.
- Reasons to mount antennas away from the router include:
    - Router location may not be optimal location for antenna to communicate with the counterpart wirelessly, so router and antenna may need to be in different locations.
    - Router may have a clutter of Ethernet cable and power cables around it, which will obstruct antenna signal.
    - A number of routers, such as the IR1835, are modular. They have plug-in RF modules for Wi-Fi , 4G LTE or 5G NR such as WP-WIFI6, P-LTEAP18-GL, P-5GS6-GL. These modules have RF connectors spaced close together, and while it is mechanically possible to install four or five antennas directly attached, this will result in significant degradation to RF performance of antennas due to

mutual de-tuning between closely spaced antennas. It is strongly recommended to install antennas away from the chassis in modular cases.

- If installing an antenna indoors, consider that the density and electromagnetic properties of the materials used in the building construction determines the number of walls the signal can pass through and still maintain adequate coverage.
  - Paper and vinyl walls have very little effect on signal penetration.
  - Solid and pre-cast concrete walls limit signal penetration to one or two walls without degrading coverage.
  - Concrete and wood block walls limit signal penetration to three or four walls.
  - A signal can penetrate five or six walls constructed of drywall or wood.
  - A thick metal wall causes signals to reflect off, causing poor penetration.
  - A chain link fence or wire mesh spaced between 1 and 1 1/2 in. (2.5 and 3.8 cm) acts as a harmonic reflector that blocks a 2.4-GHz radio signal.
  - Install the antenna away from microwave ovens and 2-GHz cordless phones. These products can cause signal interference because they operate in the same frequency range as the device your antenna is connected to.

Installation Notes

The antenna is designed to connect to a dedicated antenna port on the access point. No special tools are required to install the antenna.

The antenna is resistant to the full range of outdoor environments. After the antenna is attached to the access point, seal the connections to prevent moisture and other weathering elements from affecting performance. Cisco recommends using a coax seal (such as CoaxSeal) for outdoor connections. Silicone sealant or electrical tape are not recommended for sealing outdoor connections.

Choosing a Mounting Location

The antenna is designed to create an omni-directional broadcast pattern. To achieve this pattern, the access point should be mounted clear of any obstructions to the sides of the radiating element. If the mounting location is on the side of a building or tower, the antenna pattern is degraded on the building or tower side.

Generally, the higher an antenna is above the ground, the better it performs. A best practice is to install your antenna about 5 to 10 ft (1.5 to 3 m) above the roof line and away from all power lines and obstructions.

Tools and Equipment Required

No tools are required to mount the antenna to the access point. However, you may need a ¾ in. (19 mm) open end or combination wrench (or adjustable wrench) to remove the antenna port covers.

For information about tools required to mount the access point, see the appropriate access point documentation.

Mounting the Antenna

To connect the antenna to the access point:

1. If necessary, remove the antenna port cover.
2. Align the antenna N connector with the appropriate antenna port.
3. Gently push the antenna into the port.
4. Tighten the antenna hand tight.

Communications, Services, and Additional Information

- To receive timely, relevant information from Cisco, sign up at Cisco Profile Manager.
- To get the business impact you're looking for with the technologies that matter, visit Cisco Services.
- To submit a service request, visit Cisco Support.
- To discover and browse secure, validated enterprise-class apps, products, solutions, and services, visit Cisco DevNet.
- To obtain general networking, training, and certification titles, visit Cisco Press.
- To find warranty information for a specific product or product family, access Cisco Warranty Finder.

Cisco Bug Search Tool

Cisco Bug Search Tool (BST) is a web-based tool that acts as a gateway to the Cisco bug tracking system that maintains a comprehensive list of defects and vulnerabilities in Cisco products and software. BST provides you with detailed defect information about your products and software.

Documentation Feedback

To provide feedback about Cisco technical documentation, use the feedback form available in the right pane of every online document.

Cisco Support Community

Cisco Support Community is a forum for you to ask and answer questions, share suggestions, and collaborate with your peers. Join the forum at https://supportforums.cisco.com/index.jspa.

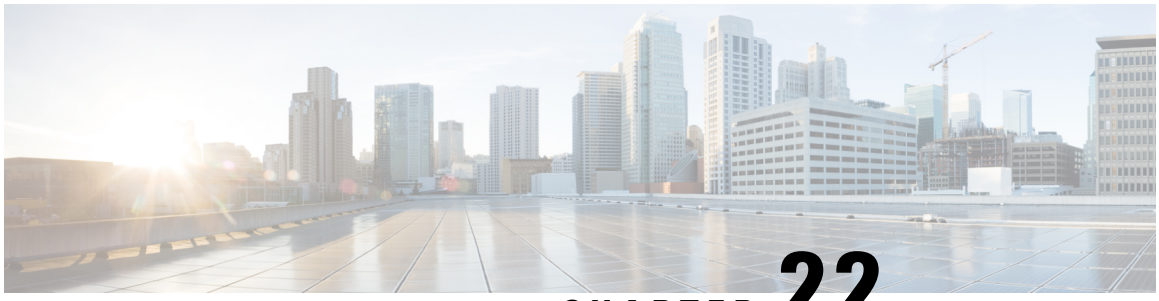

CHAPTER 22

Cisco Aironet 2.4-GHz/5-GHz 8-dBi Directional Antenna (AIR-ANT2588P3M-N)

This chapter contains the following:

- Overview, on page 379
- Technical Specifications, on page 380
- Azimuth and Elevation Radiation Patterns, on page 382
- System Requirements, on page 385
- General Safety Precautions, on page 385
- Guidelines to Achieving Optimal RF and Antenna Performance, on page 387
- Installing the Antenna, on page 390
- Communications, Services, and Additional Information, on page 397

Overview

This section describes the Cisco Aironet AIR-ANT2588P3M-N 2.4/5-GHz 8-dBi 3-port directional antenna with N-connectors, and provides specifications and mounting instructions. The antenna operates in both the 2.4 GHz and 5 GHz frequency bands and is designed for outdoor use.

Figure 147: The AIR-ANT2588P3M-N Antenna

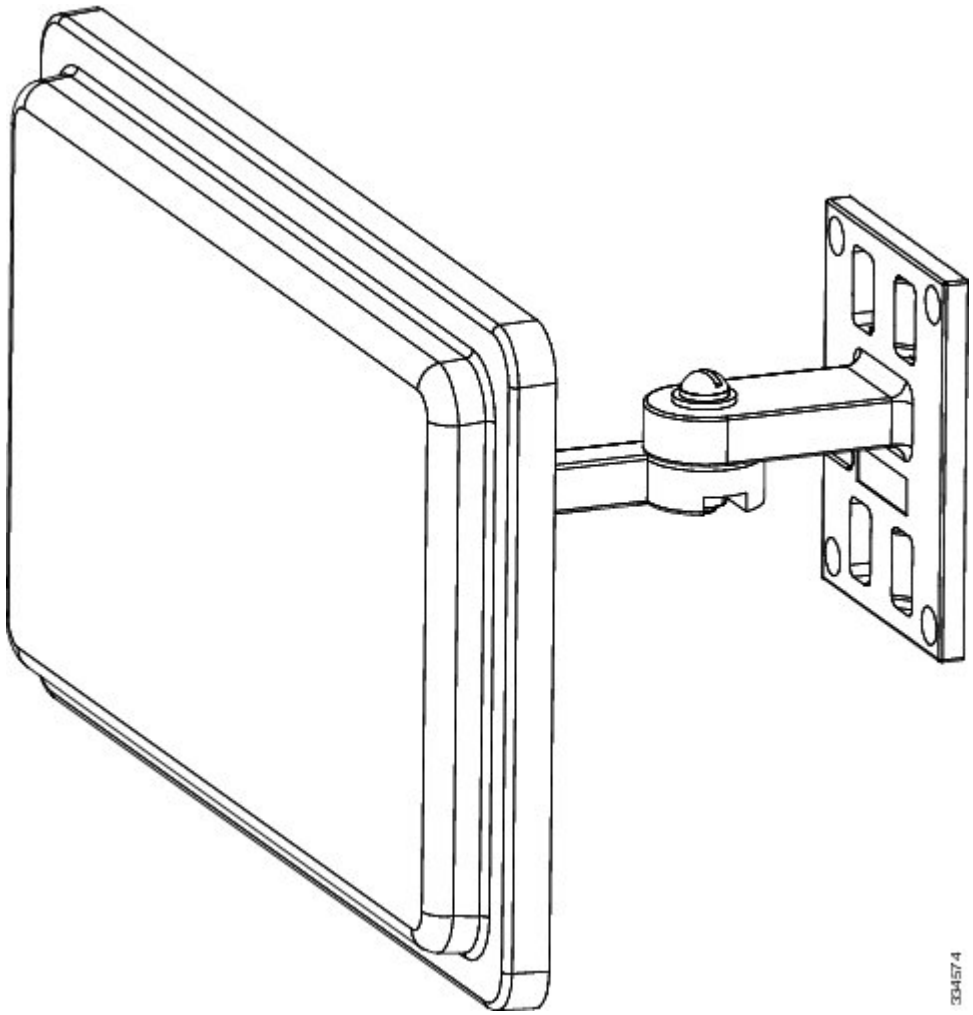

Technical Specifications

The following table provides technical specifications:

Table 40: Technical Specifications

Antenna type	3-element dual-polarized patch
Operating frequency range	2400–2500 MHz 5150–5900 MHz
Nominal input impedance	50 Ohms
VSWR	2:1 or less

Peak gain	8 dBi (both bands)
Polarization	Linear, Dual
Sidelobe level	< –20 dBc
Front-to-back ratio	> 10 dB
Length	12 in. (30.48 cm)
Width	7 in. (17.78 cm)
Height	1.1 in. (2.79 cm)
Weight	16 oz. (0.45 kg)
Connector type	N-Female Bulkhead (x3)
Operating temperature range	-40–131° F (-40–55° C)
Environment rating	IP67

Table 41: Half Power Beamwidth

Plane	**2400-2500 MHz**	**5150-5900 MHz**
Azimuth Plane V-Polarized Port (Typical)	95°	115°
Azimuth Plane H-Polarized Port (Typical)	140°	155°
Elevation Plane V-Polarized Port (Typical)	45°	26°
Elevation Plane H-Polarized Port (Typical)	36°	25°

Azimuth and Elevation Radiation Patterns

Figure 148: 2.4 GHz Band - Horizontal Polarization

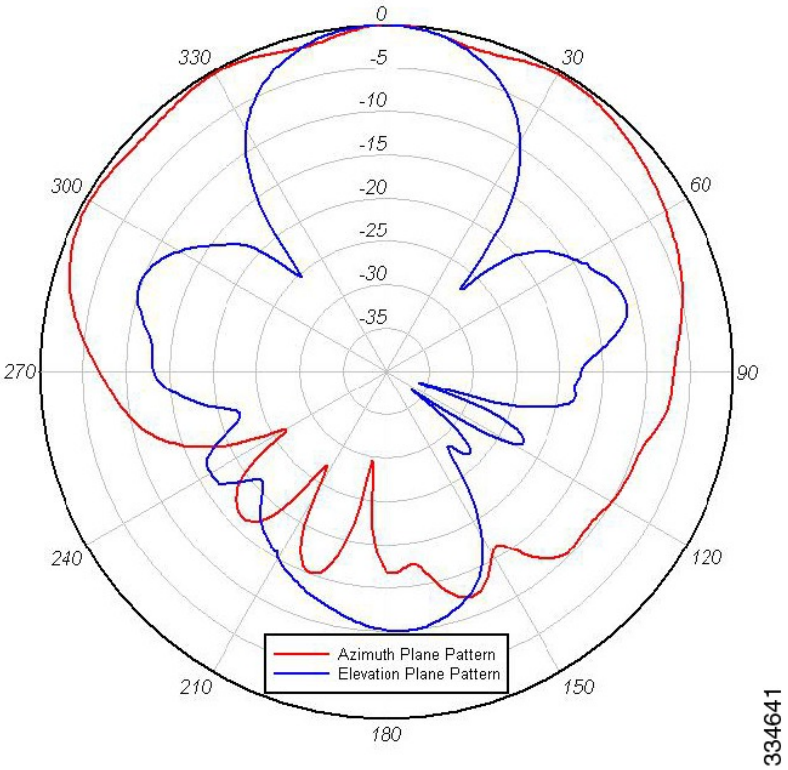

Figure 149: 5 GHz Band - Horizontal Polarization

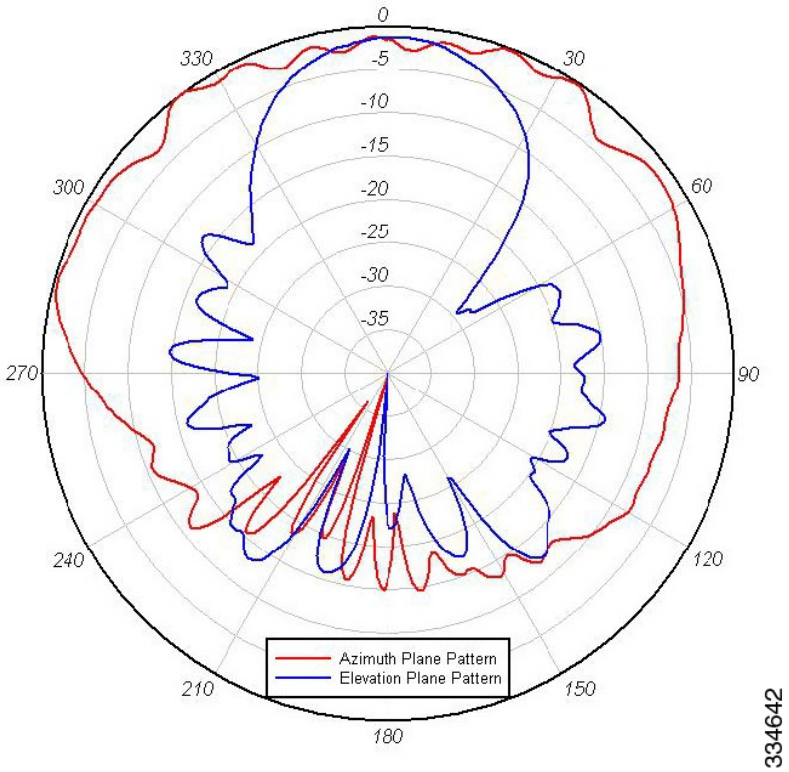

Figure 150: 2.4 GHz Band - Vertical Polarization

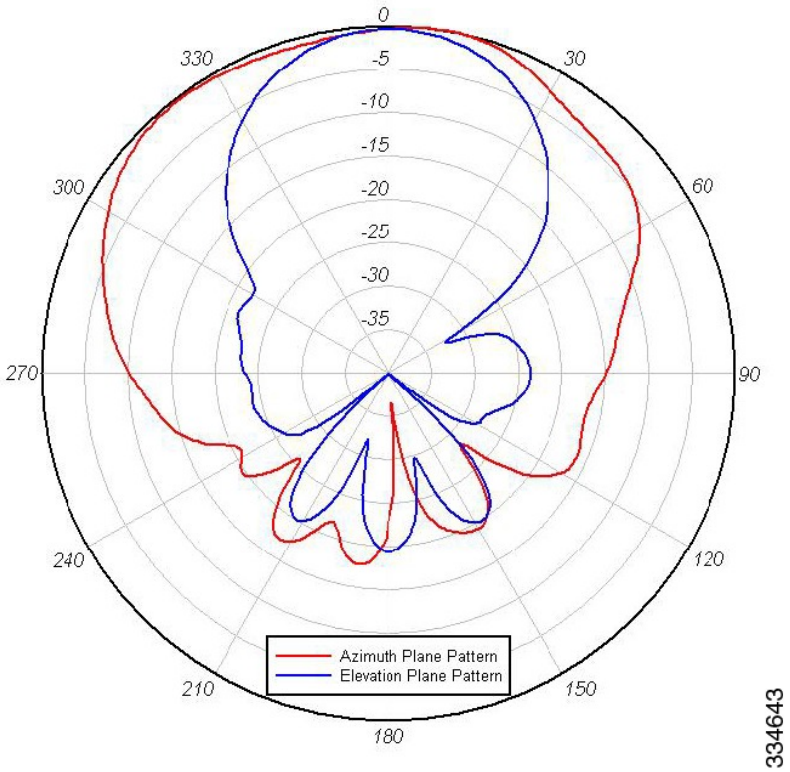

Figure 151: 5 GHz Band - Vertical Polarization

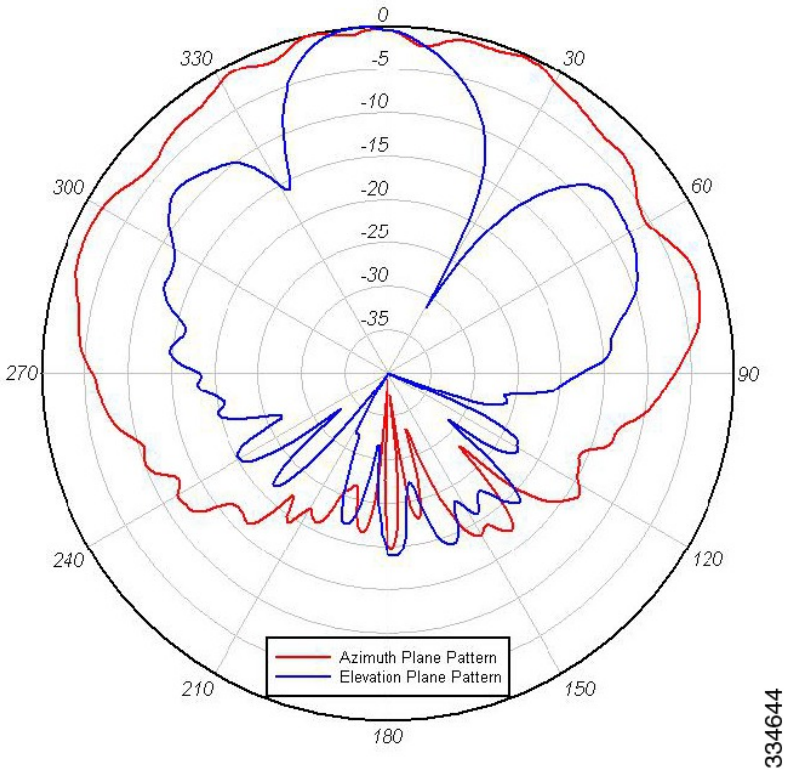

System Requirements

This antenna is designed for outdoor use with any Cisco Aironet access point that requires three (3) dual-band antennas.

General Safety Precautions

Warning This warning symbol means danger. You are in a situation that could cause bodily injury. Before you work on any equipment, be aware of the hazards involved with electrical circuitry and be familiar with standard practices for preventing accidents. Use the statement number provided at the end of each warning to locate its translation in the translated safety warnings that accompanied this device. **Statement 1071**

Warning Do not work on the system or connect or disconnect cables during periods of lightning activity. **Statement 1001**

Warning Do not locate the outdoor antenna near overhead power lines or other electric light or power circuits, or where it can come into contact with such circuits. When installing the antenna, take extreme care not to come into contact with such circuits, as they may cause serious injury or death. For proper installation and grounding of the antenna, please refer to national and local codes (for example, U.S.:NFPA 70, National Electrical Code, Article 810, Canada:Canadian Electrical Code, Section 54). **Statement 1052**

Warning In order to comply with FCC radio frequency (RF) exposure limits, antennas should be located at a minimum of 7.9 inches (20 cm) or more from the body of all persons. **Statement 332**

Note For your safety, and to help you achieve a good installation, please read and follow these safety precautions.

Mast Mounted or Building Mounted Installations

The following instructions are common to most mast mounted or building mounted installations. For specific installation instructions for each antenna, see the antenna data-sheet and the router hardware installation guide.

- Find someone to help you—installing an antenna is often a two-person job.
- Select your installation site with safety, as well as performance, in mind. Remember that electric power lines and phone lines look alike. For your safety, assume that any overhead line can kill you.
- Contact your electric power company. Tell them your plans and ask them to come look at your proposed installation.
- Do not use a metal ladder.
- Do not work on a wet or windy day.
- Do dress properly—wear shoes with rubber soles and heels, rubber gloves, and a long-sleeved shirt or jacket.
- If the assembly starts to drop, move away from it and let it fall. Because the antenna, mast, cable, and metal guy wires are all excellent conductors of electrical current, even the slightest touch of any of these parts to a power line completes an electrical path through the antenna and the installer.
- If any part of the antenna system should come in contact with a power line, do not touch it or try to remove it yourself. Call your local power company to have it removed safely.
- If an accident should occur with the power lines, call for qualified emergency help immediately.
- Assemble your new antenna on the ground or a level surface at the installation site.
- Connect its coaxial cable while you are on the ground and attach the antenna to the mast.
- Ensure that the mast does not fall as you raise or remove it. Use a durable non-conductive rope secured at each two foot level as the mast is raised. Have an assistant tend the rope, ready to pull the mast clear of any hazards (such as power lines) should it begin to fall.
- Use the mounting bracket provided with the antenna.

- If the installation will use guy wires:
  - Install guy anchor bolts.
  - Estimate the length of guy wire and cut it before raising the mast.
  - Attach guy wires to a mast using guy rings.
  - In the case of a guyed (tall, thin mast) installation, you must have at least one assistant to hold the mast upright while the guy wires are attached and tightened to the anchor bolts.
- Attach a “DANGER” label at eye level on the mast.
- Install ground rods to remove any static electricity buildup and connect a ground wire to the mast and ground rod. Use ground rods designed for that purpose, not a spare piece of pipe.

Unused Antenna Ports

Port plugs must be installed in any unused antenna ports.

The weatherproof caps on the connectors protect the router interior from environmental elements including water, heat, cold, and dust. They are installed on unused ports before the router is shipped.

When you install a new antenna in a port with an N-connector:

- Chassis-mounted antennas—Remove the weather proof cap before installing a chassis-mounted antenna.
- External antennas—Remove weatherproof cap, then connect the supported Cisco cable to the connector.

Guidelines to Achieving Optimal RF and Antenna Performance

Antennas are a critical component of a wireless communication system. Selecting a suitable antenna, an optimal antenna location, or antenna site is essential for optimum performance of a wireless links.

This section covers general tips for optimizing RF performance of indoor and outdoor terrestrial radio systems in the 400-7125 MHz frequency range. Examples of terrestrial radio systems include 4G LTE, 5G NR, Wi-Fi, LoRa, LR-WPAN and similar. In this context GPS SPS would not be considered a terrestrial system as the signal is received from space, not from another terrestrial site.

Because the antenna transmits and receives radio signals over the air, overall RF performance of the link is susceptible to RF obstructions and common sources of RF interference that can reduce throughput and range of the system.

Follow these guidelines to optimize performance. When in doubt, consult a qualified RF professional, and check with your solution partner for specific recommendations.

Antenna Model Selection and Performance

Consider the following when planning your installation:

- When selecting the antenna, ensure that it covers the frequency ranges or frequency bands of interest, and that it has good RF parameters such as antenna efficiency, VSWR and suitable radiation pattern for every frequency range that your application will use with this antenna.

- Antenna pattern is important. Omni-directional antennas have lower gain, but allow communicating to devices in all azimuth directions. Directional antennas concentrate the beam in a specific direction, making them ideal for point to point communication.
- When a system has multiple RF ports for receive and / or transmit, as is the case for 4G LTE , 5G NR or Wi-Fi, it is highly recommended to populate all the RF ports with suitable antennas to take advantage of MIMO, rather than rely on a single port or single antenna to save on cost. Please see the MIMO section for a detailed description of MIMO benefits.
- For RF systems that support multiple RF ports and multiple RF standards such as LTE, Wi-Fi, and GPS: consider using a multi-element antenna that integrates multiple antennas under the same radome (cover). Doing so may reduce cost compared to deploying and mounting a discrete single port antenna for every RF port.
- For communication between fixed infrastructure devices, such as mesh nodes or a point-to-point backhaul link, each device should have an antenna with the same polarization. If communicating with mobile devices that might be randomly oriented, consider dual-polarized antennas, such as those with both vertical and horizontal or slant +45° and -45° polarized elements.

Antenna Environmental Specifications

The selected antenna must have suitable mechanical and environmental specifications for the environment where it will be deployed. For example, shock and vibration specifications for transportation, corrosion resistant construction for marine and oil and gas industries, or IP (ingress protection) rating for outdoor deployment. Indoor antennas are typically not suitable for harsh industrial environments. Please check with your system integrator for environmental requirements for your application.

Antenna Accessories and Mounting

Consider the following when planning your installation:

- Carefully consider what type of other RF accessories, besides antenna, such as RF cables, lightning arrestors or RF adapters may be required in your installations. It is best to minimize long RF cable runs due to RF signal losses in the cable. Thinner RF cables have more RF loss , thicker cables are less flexible and more expensive.
- Carefully consider how the antenna will be physically mounted, as this may affect antenna selection. For example, a stud mount mechanical mounting design is a better fit for mounting on top of an electrical cabinet than a mast mount antenna.
- For outdoor deployments, follow installation instructions for the antenna. It is good practice to keep protective covers on the radio’s RF ports and any antenna or accessory RF ports until the moment the interfaces are mated. This reduces chances of contamination, trapping water or condensation inside the connector, or accidental damage to RF interfaces.

MIMO Performance and Arrays

MIMO systems deliver benefits of higher SNR, higher reliability and higher throughput compared to single antenna systems. In more technical terms, MIMO delivers array gain, diversity gain and multiplexing gain compared to single antenna.

- Array gain — Improvement in SNR (signal to noise ratio) by coherently combining signals from multiple antennas. For example, increasing SNR through beamforming techniques.

- Diversity gain — Improvement in reliability by mitigating deep fading or strong destructive EM wave interference. For example, in a two-antenna system, if one antenna is experiencing deep fading due to an EM destructive null at its location at a given instant, the other antenna is unlikely to have a null at the same instant, and the combined SNR stays at a reliable level. In contrast, a single antenna would see SNR oscillating between good SNR and very poor SNR and reliability would degrade.
- Multiplexing gain — Increase in system capacity or throughput by sending independent data over multiple spatial streams simultaneously. The number of streams cannot be more than the number of antennas. For example, to support three spatial streams, a minimum of three antennas is required. Often there may be additional antennas for diversity or redundancy, such as in the case of 4x4:3, or 4x4 MIMO with 3 spatial streams.

If deploying multiple single-element antennas for a MIMO system in an array, ensure sufficient spacing between the antennas. Omnidirectional elements should generally be at least one wavelength apart at the lowest operating frequency.

Consider the following:

- For Wi-Fi systems operating in the 2.4, 5, and/or 6 GHz bands, space elements at least 5 inches (12.5 cm) apart.
- For 4G LTE and 5G systems with the lowest operating frequency of 617 MHz , space elements at least 20 inches (50 cm) apart.
- Note that spacing between elements inside multi-element MIMO antennas is often less than one wavelength. However multi-element antennas are engineered with MIMO performance in mind, by providing antenna diversity through pattern, polarization, and isolation between MIMO elements.

Antenna siting and location

Consider the following when planning your installation:

- Plan antenna location ahead of time. Ideal location for an antenna is in LOS (line of sight) of the counterpart that it is trying to communicate with. Under LOS conditions the signals propagate directly between the two communication nodes, without relying on signal bouncing off a wall or other structure to reach the counterpart. This is sometimes not possible to achieve in practice, but it is a useful goal to keep in mind when optimizing antenna location.
- While it is good to keep RF cables short, it is most desirable for an antenna to be in the best location it can be to provide the desired coverage.
- For large deployments involving multiple units communicating with each other across a complex urban or industrial landscape, consider running an RF propagation modeling study to predict approximate simulated coverage maps and determine initial placement of the units. A propagation study may help reduce overall deployment cost by discovering and mitigating issues with RF coverage before the infrastructure is physically installed.
- Keep the antenna away from metal obstructions such as heating and air-conditioning ducts, large ceiling trusses, building superstructures, and major power cabling runs. One exception is if the antenna is designed to be mounted on a ground plane. If mounting on a ground plane, mount the antenna on a flat metal surface away from adjacent obstructions.
- It is strongly recommended not to install antennas directly on the router or access point (AP), unless the router or AP is specifically engineered to directly mount the antennas. Products that are engineered for direct mounting of antennas specifically address each of the below issues.

- Reasons to mount antennas away from the router include:
  - Router location may not be optimal location for antenna to communicate with the counterpart wirelessly, so router and antenna may need to be in different locations.
  - Router may have a clutter of Ethernet cable and power cables around it, which will obstruct antenna signal.
  - A number of routers, such as the IR1835, are modular. They have plug-in RF modules for Wi-Fi , 4G LTE or 5G NR such as WP-WIFI6, P-LTEAP18-GL, P-5GS6-GL. These modules have RF connectors spaced close together, and while it is mechanically possible to install four or five antennas directly attached, this will result in significant degradation to RF performance of antennas due to mutual de-tuning between closely spaced antennas. It is strongly recommended to install antennas away from the chassis in modular cases.
- If installing an antenna indoors, consider that the density and electromagnetic properties of the materials used in the building construction determines the number of walls the signal can pass through and still maintain adequate coverage.
  - Paper and vinyl walls have very little effect on signal penetration.
  - Solid and pre-cast concrete walls limit signal penetration to one or two walls without degrading coverage.
  - Concrete and wood block walls limit signal penetration to three or four walls.
  - A signal can penetrate five or six walls constructed of drywall or wood.
  - A thick metal wall causes signals to reflect off, causing poor penetration.
  - A chain link fence or wire mesh spaced between 1 and 1 1/2 in. (2.5 and 3.8 cm) acts as a harmonic reflector that blocks a 2.4-GHz radio signal.
  - Install the antenna away from microwave ovens and 2-GHz cordless phones. These products can cause signal interference because they operate in the same frequency range as the device your antenna is connected to.

Installing the Antenna

You can install the antenna on a pole from 1.63 to 2.3 inches pipe O.D. The mounting options allow the antenna to be vertically or horizontally polarized.

Tools and Equipment Required

- Antenna mount bracket
- Elevation adjustable bracket
- Azimuth adjustable bracket
- Two 1/4 in. 20 azimuth and elevation adjustment bolts and nuts with 1/4 in. flat washers and lock washers
- Two pipe clamps

The following tools and equipment are not provided:

- 5/16 in wrench
- 1/4 in flat head screwdriver
- 5/16 in nut driver or flat head screwdriver for pipe clamps

Mounting on a Pole

To mount your antenna on a pole:

Step 1 Remove antenna and mount kit from packaging.

Step 2 Attach antenna mount bracket to the back of the antenna as shown applying a maximum nut-tightening torque of 12 in lbf (1.1 Nm).

Figure 152: Attaching Antenna Mount Bracket

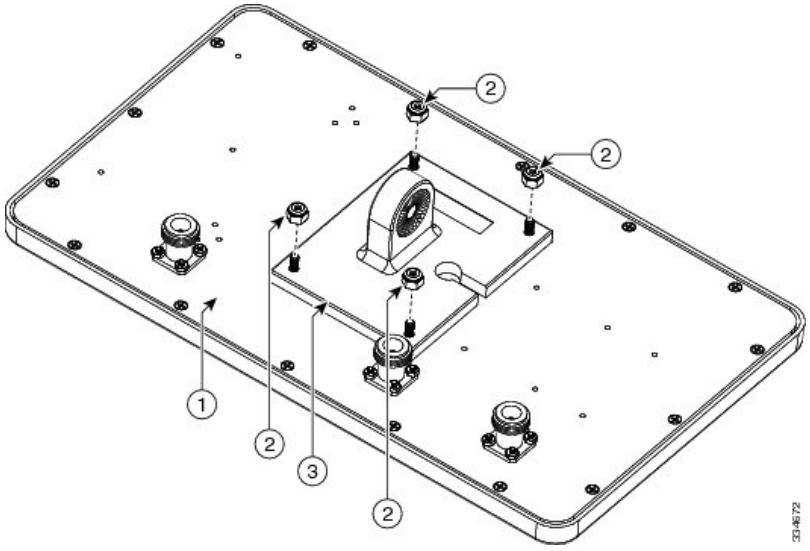

1	Antenna
2	Stud nut
3	Antenna mount bracket

Step 3 Attach elevation adjustable bracket as shown and loosely secure hardware.

Figure 153: Attach elevation adjustable bracket

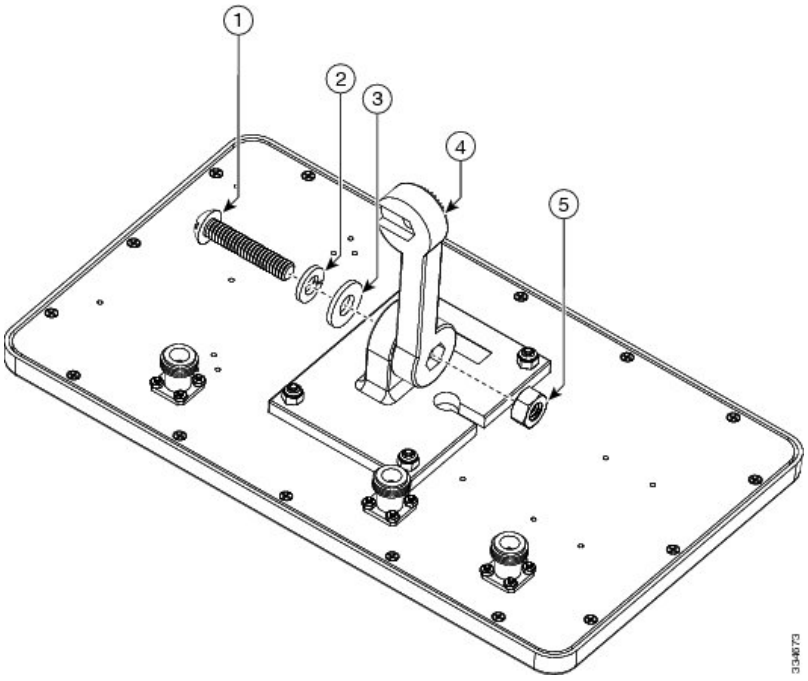

1	Elevation adjustable bolt
2	Lock washer
3	1/4-in. flat washer
4	Elevation adjustable bracket
5	Hex nut

Step 4 Attach azimuth adjustable bracket to pipe routing band clamps as shown. Tighten the pipe clamps to a torque of 35–45 in lbf (4.0–5.1 Nm).

Figure 154: Attaching Azimuth Adjustable Bracket

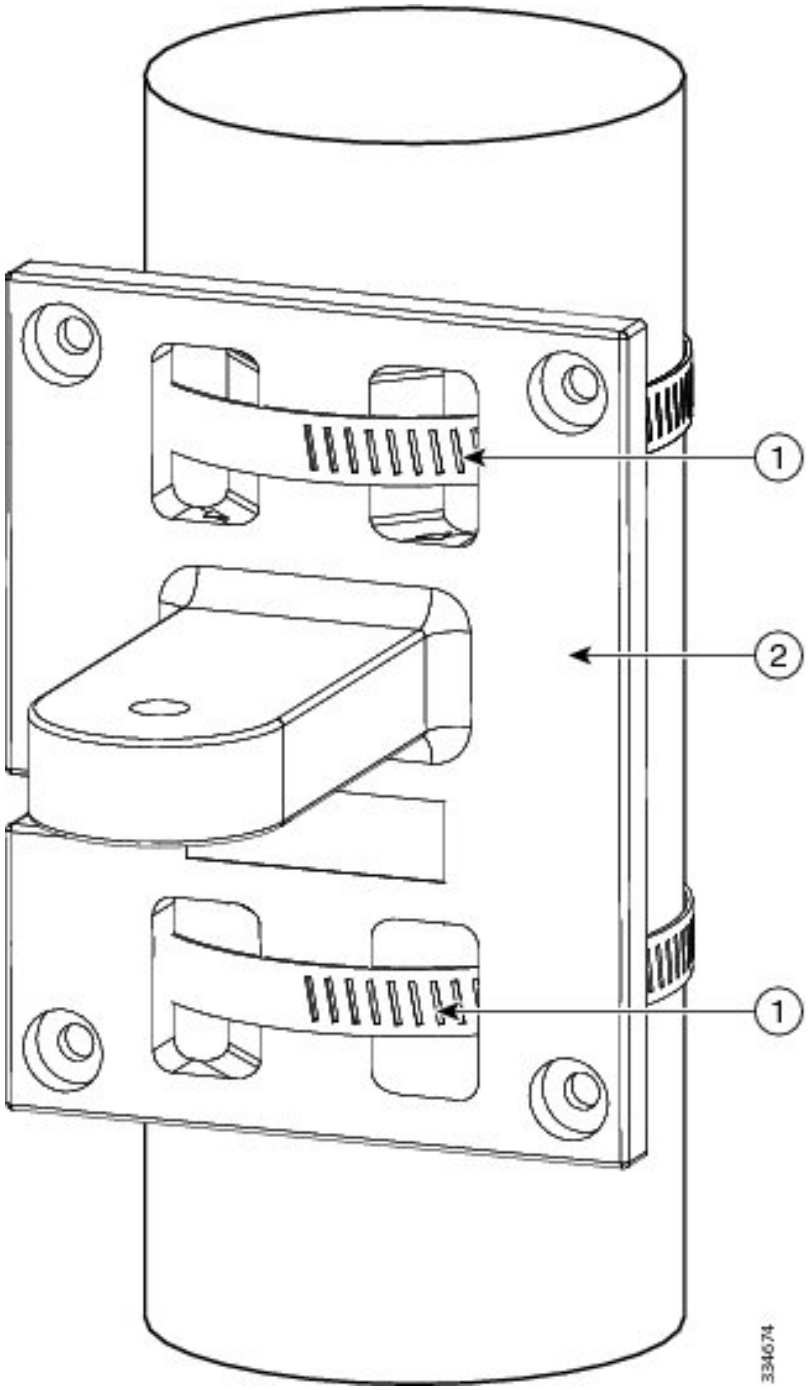

1	Pipe clamps
2	Azimuth adjustable bracket

Step 5 Attach the antenna assembly to the azimuth adjustable bracket on pipe.

Figure 155: Attaching Antenna Assembly

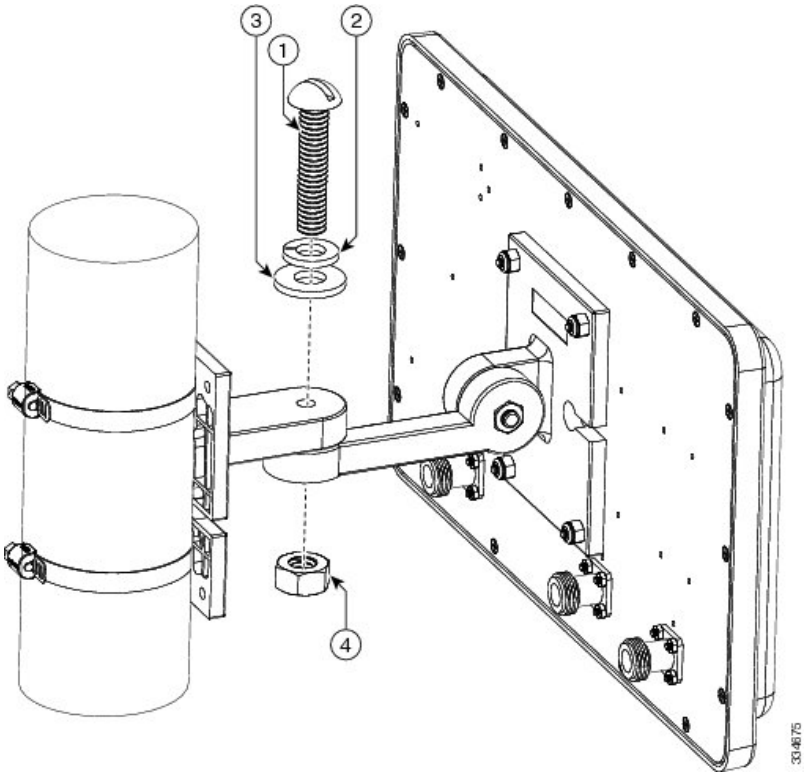

1	Azimuth adjustment bolt
2	Lock washer
3	1/4-in. flat washer
4	Hex nut

Step 6 Adjust the position of the antenna to the desired azimuth and elevation angles and tighten all pivot hardware (2 places) to a maximum torque of 30 in-lbf (3.4 Nm). The bracket allows the antenna position to be adjustable to +/–45 degrees azimuth and +/–60 degrees elevation.

What to do next

Cisco recommends grounding the antenna. See the Grounding the Antenna section.

Mounting on a Vertical Surface

The antenna can be wall mounted. Hardware is not included for wall-mount installation.

To mount your antenna on a vertical surface:

Step 1 Remove antenna and mount kit from packaging.

Step 2 Attach antenna mount bracket to the back of the antenna as shown in Figure 2, applying a maximum nut-tightening torque of 12 in. lbf (1.1 Nm).

Step 3 Attach elevation adjustable bracket as shown in Figure 3 and loosely secure hardware.

Step 4 Using the appropriate customer-supplied anchors and screws, attach the azimuth adjustable bracket to the wall as shown in the following:

Figure 156: Wall Mounting

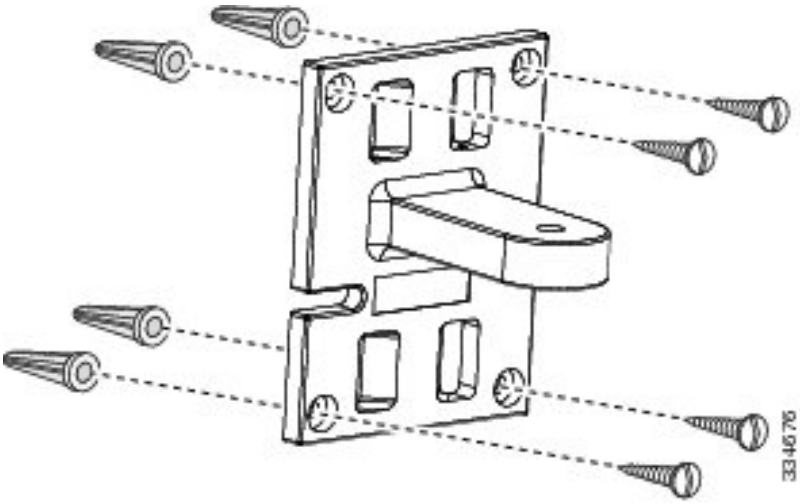

The following figure shows, in inches, the distance between the bracket mounting holes.

Figure 157: Distance Between Bracket Mounting Holes

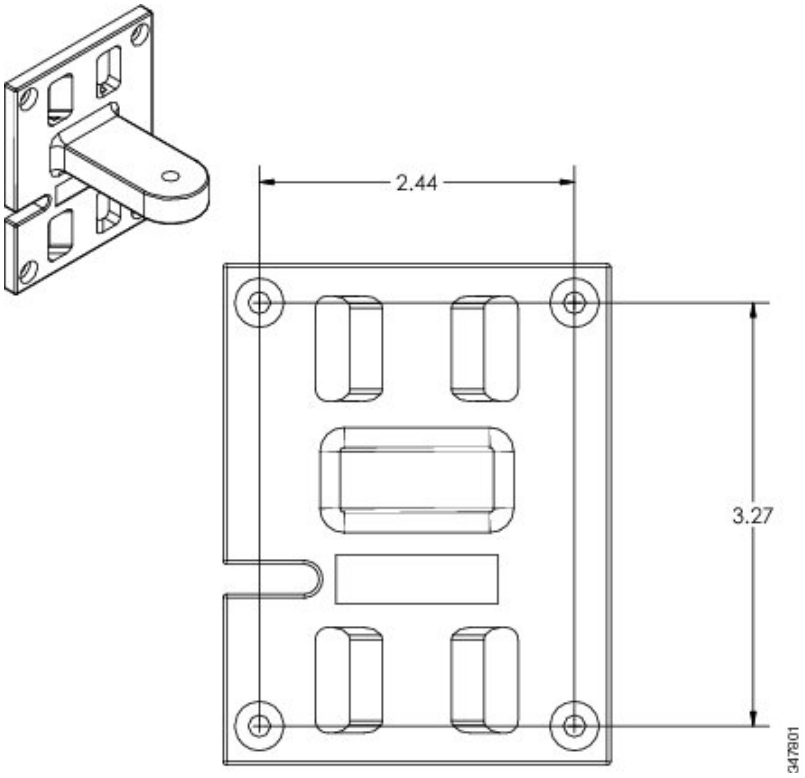

Step 5 Attach antenna assembly to azimuth bracket, as shown in Figure 5.

Step 6 Adjust the position of the antenna to the desired azimuth and elevation angles and tighten all pivot hardware (two places) to a maximum torque of 30 in. lbf (3.4 Nm). The bracket allows the antenna position to be adjustable to +/–45 degrees azimuth and +/–60 degrees elevation.

What to do next

Cisco recommends grounding the antenna. See the Grounding the Antenna section.

Antenna Cable Information

The antenna is to be used with the Cisco 1552E access point. The port-to-port designations are as follows: port A of the antenna must be connected to port 4 of the access point, port B of the antenna must be connected to port 6 of the access point, and port C of the antenna must be connected to port 5 of the access point.

Note Coaxial cable loses efficiency as the frequency increases, resulting in signal loss. The cable should be kept as short as possible, because cable length also determines the amount of signal loss (the longer the run, the greater the loss).

Cisco offers low-loss 5 ft. and 10 ft. coaxial cables, parts AIR-CAB005LL-N and AIR-CAB010LL-N, respectively, for connection from the antenna to the access point. These cables have one straight male type-N

connector and one right angle male type-N connector. To use all of the ports on the AIR-ANT2588P3M-N three cables will be needed.

After the cable is attached to the antenna, make sure that the connections are sealed (if outdoors) to prevent moisture and other weathering elements from affecting performance. Cisco recommends using a coax seal (such as CoaxSeal) for outdoor connections. Silicone sealant or electrical tape are not recommended for sealing outdoor connections.

Grounding the Antenna

Follow these steps to ground the antenna in accordance with national electrical code instructions.

1. Use No. 10 AWG copper or No. 8 or larger copper-clad steel or bronze wire as ground wires for both mast and lead-in. Securely clamp the wire to the bottom of the mast.
2. Secure the lead-in wire to an antenna discharge unit and the mast ground wire to the building with stand-off insulators spaced from 4 ft (1.2 m) to 8 ft (2.4 m) apart.
3. Mount the antenna discharge unit as close as possible to where the lead-in wire enters the building.
4. Drill a hole in the building's wall as close as possible to the equipment to which you will connect the lead-in cable.



Caution There may be wires in the wall. Ensure that your drilling location is clear of obstruction or other hazards.

5. Pull the cable through the hole and form a drip loop close to where it enters the building.
6. Thoroughly waterproof the lead-in area.
7. Install a lightning arrestor.
8. Connect the lead-in cable to the equipment.

Communications, Services, and Additional Information

- To receive timely, relevant information from Cisco, sign up at Cisco Profile Manager.
- To get the business impact you're looking for with the technologies that matter, visit Cisco Services.
- To submit a service request, visit Cisco Support.
- To discover and browse secure, validated enterprise-class apps, products, solutions, and services, visit Cisco DevNet.
- To obtain general networking, training, and certification titles, visit Cisco Press.
- To find warranty information for a specific product or product family, access Cisco Warranty Finder.

Cisco Bug Search Tool

Cisco Bug Search Tool (BST) is a web-based tool that acts as a gateway to the Cisco bug tracking system that maintains a comprehensive list of defects and vulnerabilities in Cisco products and software. BST provides you with detailed defect information about your products and software.

Documentation Feedback

To provide feedback about Cisco technical documentation, use the feedback form available in the right pane of every online document.

Cisco Support Community

Cisco Support Community is a forum for you to ask and answer questions, share suggestions, and collaborate with your peers. Join the forum at https://supportforums.cisco.com/index.jspa.

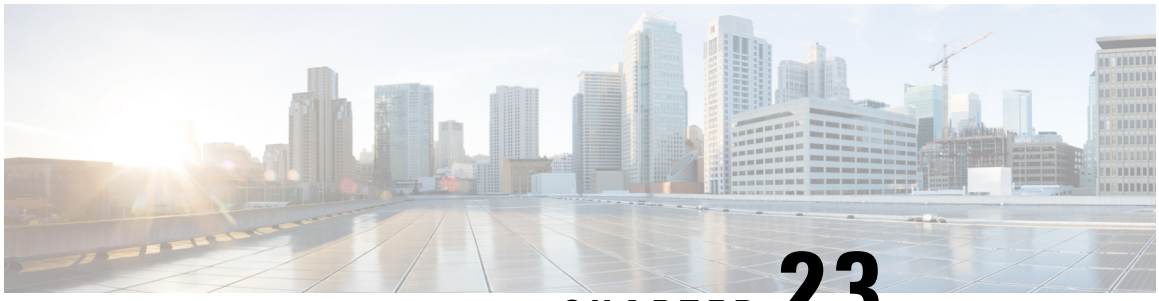

CHAPTER 23

Cisco Aironet 5-GHz 13-dBi Directional Antenna (AIR-ANT5114P2M-N)

This chapter contains the following:

- Overview, on page 399
- Technical Specifications, on page 400
- Elevation and Azimuth Plane Patterns, on page 401
- System Requirements, on page 401
- General Safety Precautions, on page 402
- Guidelines to Achieving Optimal RF and Antenna Performance, on page 403
- Installing the Antenna, on page 407
- Communications, Services, and Additional Information, on page 415

Overview

This section describes the Cisco Aironet AIR-ANT5114P2M-N 5-GHz 13-dBi 2-Port Directional antenna with N-type connectors, and provides specifications and mounting instructions. The antenna operates in the 5 GHz frequency band and is designed for use in outdoor environments.

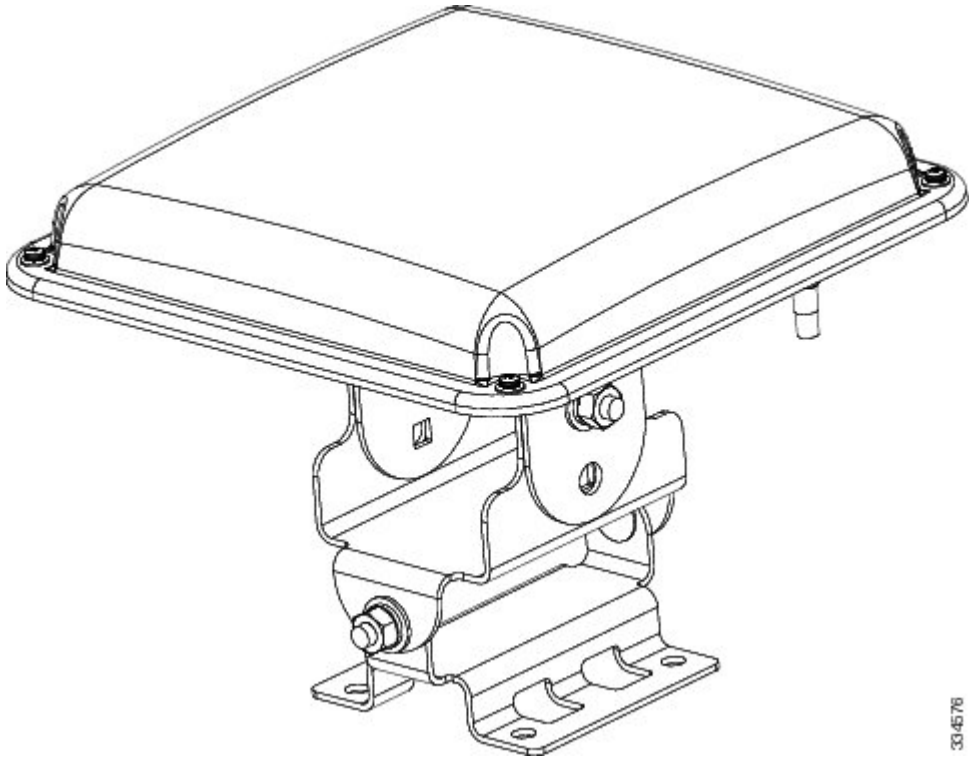

Technical Specifications

Antenna type	2-Element Patch Array
Operating frequency range	5150–5900 MHz
Nominal input impedance	50 Ohms
Peak gain	13 dBi (see note below)
Polarization	Linear, Dual
Elevation plane 3-dB beamwidth	30°
Azimuth plane 3-dB beamwidth	30°
Sidelobe level	< –15 dBc
Front-to-back ratio	> 25 dB
Cable length and type	30 in. (76.2 cm)outdoor rated Coax
Connector type	N Male
Length	7.8 in. (19.8 cm)
Width	7.8 in. (19.8 cm)

Antenna type	2-Element Patch Array
Height	1.2 in. (3 cm)
Weight	21.6 oz. (0.61 kg)
Operating temperature range	-40–131°F(-40–55°C)

Note The AIR-ANT5114P2M-N antenna may be referred to as a +14 dBI antenna in variety of Cisco documents. The actual gain of the AIR-ANT5114P2M-N product is +13 dBI, confirmed over many samples of the AIR-ANT5114P2M-N antenna. The gain of the raw antenna element inside AIR-ANT5114P2M-N is just under 14 dBI, but due to 1dB RF loss of the integrated 30" length coaxial RF cable, the actual gain of the AIR-ANT5114P2M-N antenna product is 13 dBI maximum.

Elevation and Azimuth Plane Patterns

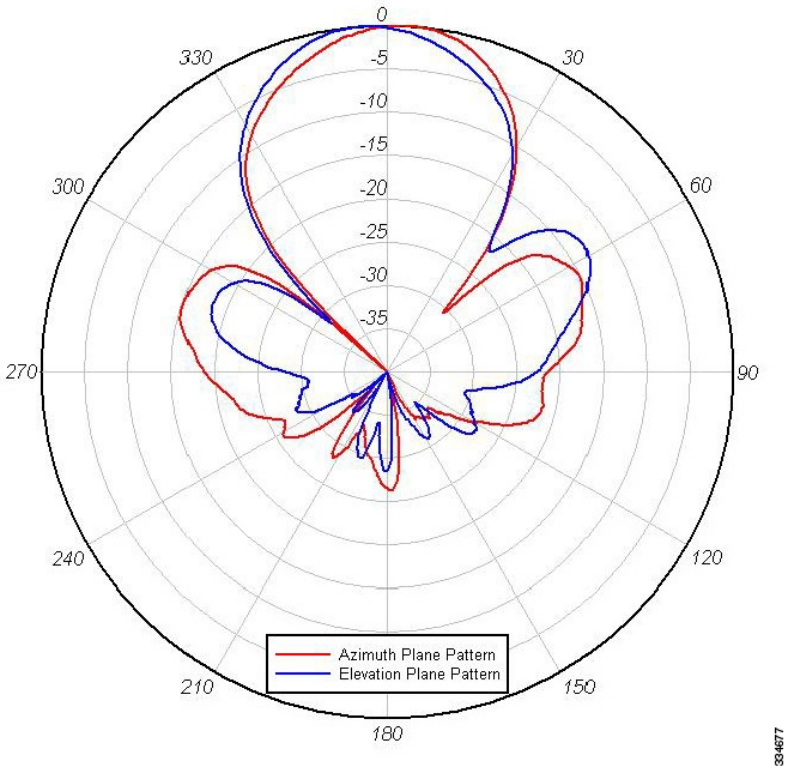

System Requirements

This antenna is designed for use with Cisco Aironet access points and bridges, but can be used with any 5 GHz Cisco Aironet radio device that uses an N-male connector.

General Safety Precautions

Warning This warning symbol means danger. You are in a situation that could cause bodily injury. Before you work on any equipment, be aware of the hazards involved with electrical circuitry and be familiar with standard practices for preventing accidents. Use the statement number provided at the end of each warning to locate its translation in the translated safety warnings that accompanied this device. **Statement 1071**

Warning Do not work on the system or connect or disconnect cables during periods of lightning activity. **Statement 1001**

Warning Do not locate the outdoor antenna near overhead power lines or other electric light or power circuits, or where it can come into contact with such circuits. When installing the antenna, take extreme care not to come into contact with such circuits, as they may cause serious injury or death. For proper installation and grounding of the antenna, please refer to national and local codes (for example, U.S.:NFPA 70, National Electrical Code, Article 810, Canada:Canadian Electrical Code, Section 54). **Statement 1052**

Warning In order to comply with FCC radio frequency (RF) exposure limits, antennas should be located at a minimum of 7.9 inches (20 cm) or more from the body of all persons. **Statement 332**

Note For your safety, and to help you achieve a good installation, please read and follow these safety precautions.

Mast Mounted or Building Mounted Installations

The following instructions are common to most mast mounted or building mounted installations. For specific installation instructions for each antenna, see the antenna data-sheet and the router hardware installation guide.

- Find someone to help you—installing an antenna is often a two-person job.
- Select your installation site with safety, as well as performance, in mind. Remember that electric power lines and phone lines look alike. For your safety, assume that any overhead line can kill you.
- Contact your electric power company. Tell them your plans and ask them to come look at your proposed installation.
- Do not use a metal ladder.
- Do not work on a wet or windy day.
- Do dress properly—wear shoes with rubber soles and heels, rubber gloves, and a long-sleeved shirt or jacket.

- If the assembly starts to drop, move away from it and let it fall. Because the antenna, mast, cable, and metal guy wires are all excellent conductors of electrical current, even the slightest touch of any of these parts to a power line completes an electrical path through the antenna and the installer.
- If any part of the antenna system should come in contact with a power line, do not touch it or try to remove it yourself. Call your local power company to have it removed safely.
- If an accident should occur with the power lines, call for qualified emergency help immediately.
- Assemble your new antenna on the ground or a level surface at the installation site.
- Connect its coaxial cable while you are on the ground and attach the antenna to the mast.
- Ensure that the mast does not fall as you raise or remove it. Use a durable non-conductive rope secured at each two foot level as the mast is raised. Have an assistant tend the rope, ready to pull the mast clear of any hazards (such as power lines) should it begin to fall.
- Use the mounting bracket provided with the antenna.
- If the installation will use guy wires:
  - Install guy anchor bolts.
  - Estimate the length of guy wire and cut it before raising the mast.
  - Attach guy wires to a mast using guy rings.
  - In the case of a guyed (tall, thin mast) installation, you must have at least one assistant to hold the mast upright while the guy wires are attached and tightened to the anchor bolts.
- Attach a “DANGER” label at eye level on the mast.
- Install ground rods to remove any static electricity buildup and connect a ground wire to the mast and ground rod. Use ground rods designed for that purpose, not a spare piece of pipe.

Unused Antenna Ports

Port plugs must be installed in any unused antenna ports.

The weatherproof caps on the connectors protect the router interior from environmental elements including water, heat, cold, and dust. They are installed on unused ports before the router is shipped.

When you install a new antenna in a port with an N-connector:

- Chassis-mounted antennas—Remove the weather proof cap before installing a chassis-mounted antenna.
- External antennas—Remove weatherproof cap, then connect the supported Cisco cable to the connector.

Guidelines to Achieving Optimal RF and Antenna Performance

Antennas are a critical component of a wireless communication system. Selecting a suitable antenna, an optimal antenna location, or antenna site is essential for optimum performance of a wireless links.

This section covers general tips for optimizing RF performance of indoor and outdoor terrestrial radio systems in the 400-7125 MHz frequency range. Examples of terrestrial radio systems include 4G LTE, 5G NR, Wi-Fi,

LoRa, LR-WPAN and similar. In this context GPS SPS would not be considered a terrestrial system as the signal is received from space, not from another terrestrial site.

Because the antenna transmits and receives radio signals over the air, overall RF performance of the link is susceptible to RF obstructions and common sources of RF interference that can reduce throughput and range of the system.

Follow these guidelines to optimize performance. When in doubt, consult a qualified RF professional, and check with your solution partner for specific recommendations.

Antenna Model Selection and Performance

Consider the following when planning your installation:

- When selecting the antenna, ensure that it covers the frequency ranges or frequency bands of interest, and that it has good RF parameters such as antenna efficiency, VSWR and suitable radiation pattern for every frequency range that your application will use with this antenna.
- Antenna pattern is important. Omni-directional antennas have lower gain, but allow communicating to devices in all azimuth directions. Directional antennas concentrate the beam in a specific direction, making them ideal for point to point communication.
- When a system has multiple RF ports for receive and / or transmit, as is the case for 4G LTE , 5G NR or Wi-Fi, it is highly recommended to populate all the RF ports with suitable antennas to take advantage of MIMO, rather than rely on a single port or single antenna to save on cost. Please see the MIMO section for a detailed description of MIMO benefits.
- For RF systems that support multiple RF ports and multiple RF standards such as LTE, Wi-Fi, and GPS: consider using a multi-element antenna that integrates multiple antennas under the same radome (cover). Doing so may reduce cost compared to deploying and mounting a discrete single port antenna for every RF port.
- For communication between fixed infrastructure devices, such as mesh nodes or a point-to-point backhaul link, each device should have an antenna with the same polarization. If communicating with mobile devices that might be randomly oriented, consider dual-polarized antennas, such as those with both vertical and horizontal or slant +45° and -45° polarized elements.

Antenna Environmental Specifications

The selected antenna must have suitable mechanical and environmental specifications for the environment where it will be deployed. For example, shock and vibration specifications for transportation, corrosion resistant construction for marine and oil and gas industries, or IP (ingress protection) rating for outdoor deployment. Indoor antennas are typically not suitable for harsh industrial environments. Please check with your system integrator for environmental requirements for your application.

Antenna Accessories and Mounting

Consider the following when planning your installation:

- Carefully consider what type of other RF accessories, besides antenna, such as RF cables, lightning arrestors or RF adapters may be required in your installations. It is best to minimize long RF cable runs due to RF signal losses in the cable. Thinner RF cables have more RF loss , thicker cables are less flexible and more expensive.

- Carefully consider how the antenna will be physically mounted, as this may affect antenna selection. For example, a stud mount mechanical mounting design is a better fit for mounting on top of an electrical cabinet than a mast mount antenna.
- For outdoor deployments, follow installation instructions for the antenna. It is good practice to keep protective covers on the radio's RF ports and any antenna or accessory RF ports until the moment the interfaces are mated. This reduces chances of contamination, trapping water or condensation inside the connector, or accidental damage to RF interfaces.

MIMO Performance and Arrays

MIMO systems deliver benefits of higher SNR, higher reliability and higher throughput compared to single antenna systems. In more technical terms, MIMO delivers array gain, diversity gain and multiplexing gain compared to single antenna.

- Array gain — Improvement in SNR (signal to noise ratio) by coherently combining signals from multiple antennas. For example, increasing SNR through beamforming techniques.
- Diversity gain — Improvement in reliability by mitigating deep fading or strong destructive EM wave interference. For example, in a two-antenna system, if one antenna is experiencing deep fading due to an EM destructive null at its location at a given instant, the other antenna is unlikely to have a null at the same instant, and the combined SNR stays at a reliable level. In contrast, a single antenna would see SNR oscillating between good SNR and very poor SNR and reliability would degrade.
- Multiplexing gain — Increase in system capacity or throughput by sending independent data over multiple spatial streams simultaneously. The number of streams cannot be more than the number of antennas. For example, to support three spatial streams, a minimum of three antennas is required. Often there may be additional antennas for diversity or redundancy, such as in the case of 4x4:3, or 4x4 MIMO with 3 spatial streams.

If deploying multiple single-element antennas for a MIMO system in an array, ensure sufficient spacing between the antennas. Omnidirectional elements should generally be at least one wavelength apart at the lowest operating frequency.

Consider the following:

- For Wi-Fi systems operating in the 2.4, 5, and/or 6 GHz bands, space elements at least 5 inches (12.5 cm) apart.
- For 4G LTE and 5G systems with the lowest operating frequency of 617 MHz , space elements at least 20 inches (50 cm) apart.
- Note that spacing between elements inside multi-element MIMO antennas is often less than one wavelength. However multi-element antennas are engineered with MIMO performance in mind, by providing antenna diversity through pattern, polarization, and isolation between MIMO elements.

Antenna siting and location

Consider the following when planning your installation:

- Plan antenna location ahead of time. Ideal location for an antenna is in LOS (line of sight) of the counterpart that it is trying to communicate with. Under LOS conditions the signals propagate directly between the two communication nodes, without relying on signal bouncing off a wall or other structure to reach the counterpart. This is sometimes not possible to achieve in practice, but it is a useful goal to keep in mind when optimizing antenna location.

- While it is good to keep RF cables short, it is most desirable for an antenna to be in the best location it can be to provide the desired coverage.
- For large deployments involving multiple units communicating with each other across a complex urban or industrial landscape, consider running an RF propagation modeling study to predict approximate simulated coverage maps and determine initial placement of the units. A propagation study may help reduce overall deployment cost by discovering and mitigating issues with RF coverage before the infrastructure is physically installed.
- Keep the antenna away from metal obstructions such as heating and air-conditioning ducts, large ceiling trusses, building superstructures, and major power cabling runs. One exception is if the antenna is designed to be mounted on a ground plane. If mounting on a ground plane, mount the antenna on a flat metal surface away from adjacent obstructions.
- It is strongly recommended not to install antennas directly on the router or access point (AP), unless the router or AP is specifically engineered to directly mount the antennas. Products that are engineered for direct mounting of antennas specifically address each of the below issues.
- Reasons to mount antennas away from the router include:
  - Router location may not be optimal location for antenna to communicate with the counterpart wirelessly, so router and antenna may need to be in different locations.
  - Router may have a clutter of Ethernet cable and power cables around it, which will obstruct antenna signal.
  - A number of routers, such as the IR1835, are modular. They have plug-in RF modules for Wi-Fi , 4G LTE or 5G NR such as WP-WIFI6, P-LTEAP18-GL, P-5GS6-GL. These modules have RF connectors spaced close together, and while it is mechanically possible to install four or five antennas directly attached, this will result in significant degradation to RF performance of antennas due to mutual de-tuning between closely spaced antennas. It is strongly recommended to install antennas away from the chassis in modular cases.
- If installing an antenna indoors, consider that the density and electromagnetic properties of the materials used in the building construction determines the number of walls the signal can pass through and still maintain adequate coverage.
  - Paper and vinyl walls have very little effect on signal penetration.
  - Solid and pre-cast concrete walls limit signal penetration to one or two walls without degrading coverage.
  - Concrete and wood block walls limit signal penetration to three or four walls.
  - A signal can penetrate five or six walls constructed of drywall or wood.
  - A thick metal wall causes signals to reflect off, causing poor penetration.
  - A chain link fence or wire mesh spaced between 1 and 1 1/2 in. (2.5 and 3.8 cm) acts as a harmonic reflector that blocks a 2.4-GHz radio signal.
  - Install the antenna away from microwave ovens and 2-GHz cordless phones. These products can cause signal interference because they operate in the same frequency range as the device your antenna is connected to.

Installing the Antenna

You can install the antenna on a pole from 1.63 to 2.3 inch pipe O.D. The mounting options allow the antenna to be vertically or horizontally polarized.

Required Tools and Equipment

An installation kit is shipped with the antenna and consists of the panel antenna with adjustable mount and hardware, including:

- Antenna mount bracket
- Elevation adjustable bracket
- Azimuth adjustable bracket
- Four 1/4 in. 20x3/4 carriage bolts
- Six 1/4 in. 20 hex nuts
- Six 1/4 in. 20 spring lock washers
- Six 1/4 in. 20 flat washers
- Two pipe clamps

The following tools and equipment are not provided:

- 7/16 in wrench
- 5/16 in nut driver or flat head screwdriver for pipe clamps

The following sections contain typical procedures for installing the antenna on a pole. Your installation may vary.

Mounting on a Pole

To mount your antenna on a pole:

Step 1 Remove antenna and mount kit from packaging.

Step 2 Attach antenna mount bracket to the back of the antenna as shown applying a maximum nut-tightening torque of 55 in lbf (6.2 Nm).

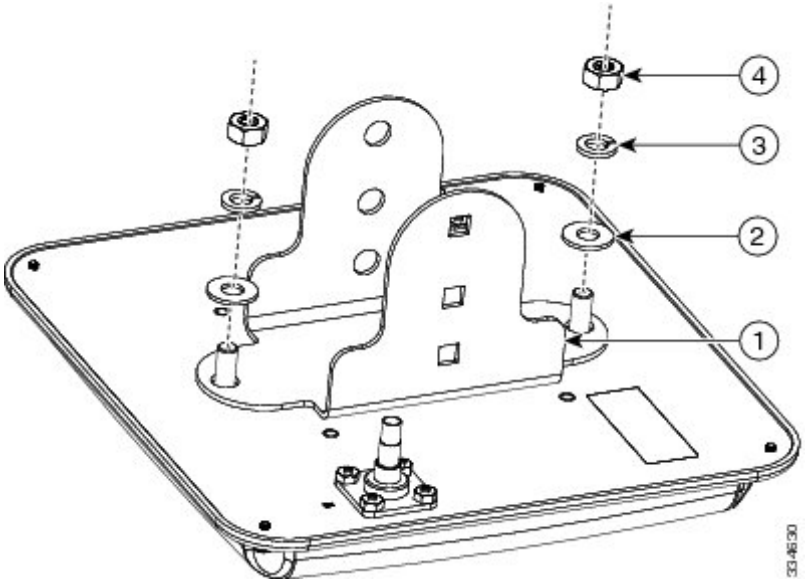

1	Antenna mount bracket
2	1/4-in. flat washer
3	1/4-in. spring lock washer
4	1/4-in. 20 hex nut

Step 3 Attach elevation adjustable bracket as shown and loosely secure hardware. The carriage bolt square holes must be on the inside.

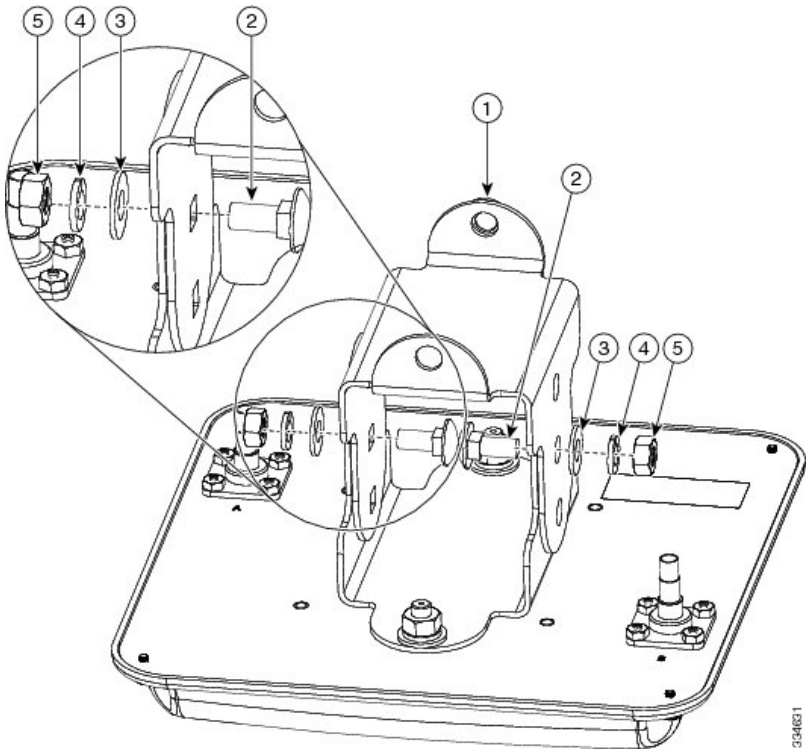

1	Elevation adjustable bracket
2	1/4 in. 20x3/4 carriage bolt
3	1/4 in. flat washer
4	1/4 in. spring lock washer
5	1/4 in. 20 hex nut

Step 4 Attach azimuth adjustable bracket to pipe routing band clamps as shown. Tighten the pipe clamps to a torque of 43-51 in lbf (4.9-5.8 Nm).

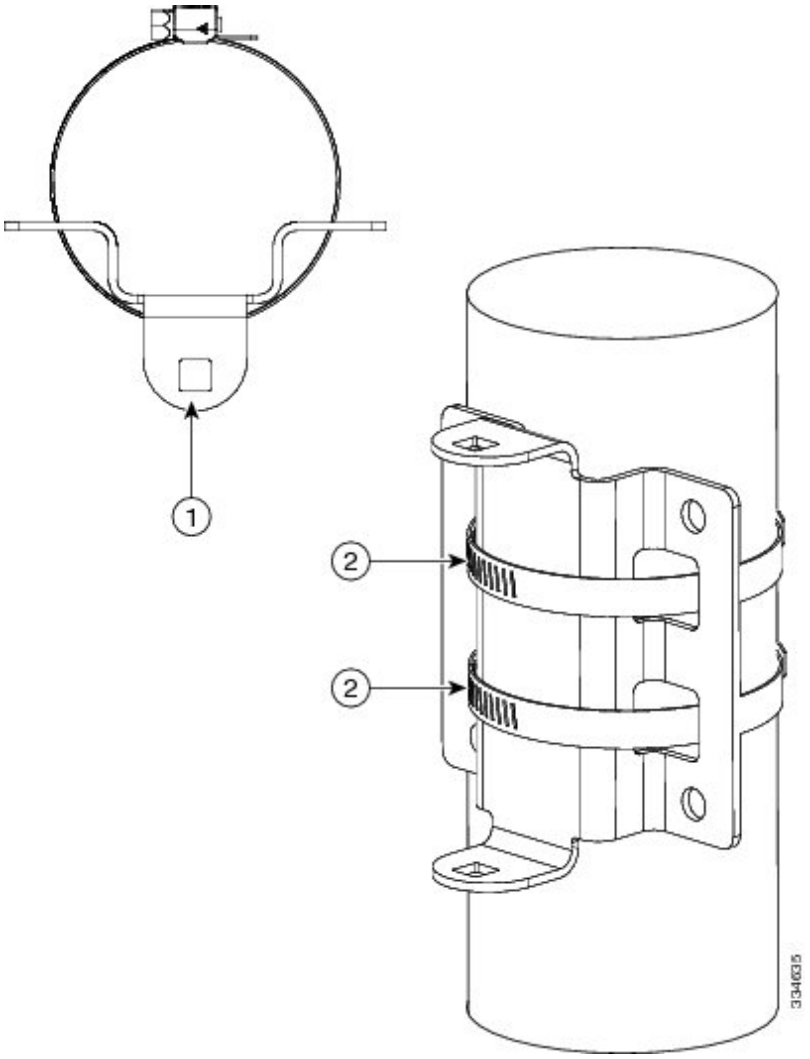

1	Azimuth adjustable bracket
2	Pipe clamps

Step 5 Attach antenna assembly to azimuth bracket on pipe.

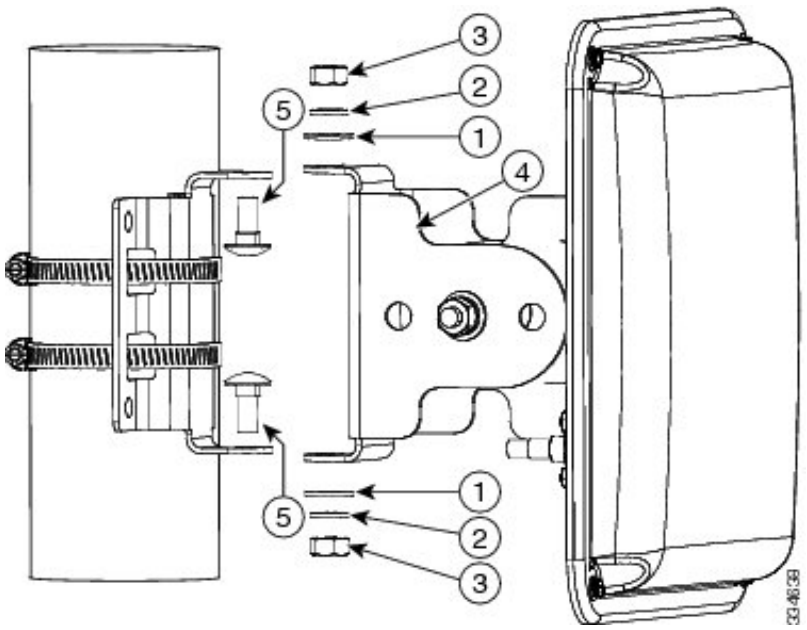

1	1/4 in. flat washer
2	1/4 in. spring lock washer
3	1/4 in. 20 hex nut
4	Elevation adjustable bracket
5	1/4 in. 20x 3/4 carriage bolt

Step 6 Adjust the position of the antenna to the desired azimuth and elevation angles and tighten all pivot hardware (4 places) to a maximum torque of 55 in lbf (6.2 Nm). The bracket allows the antenna position to be adjustable to +/–45 degrees azimuth and +/–60 degrees elevation.

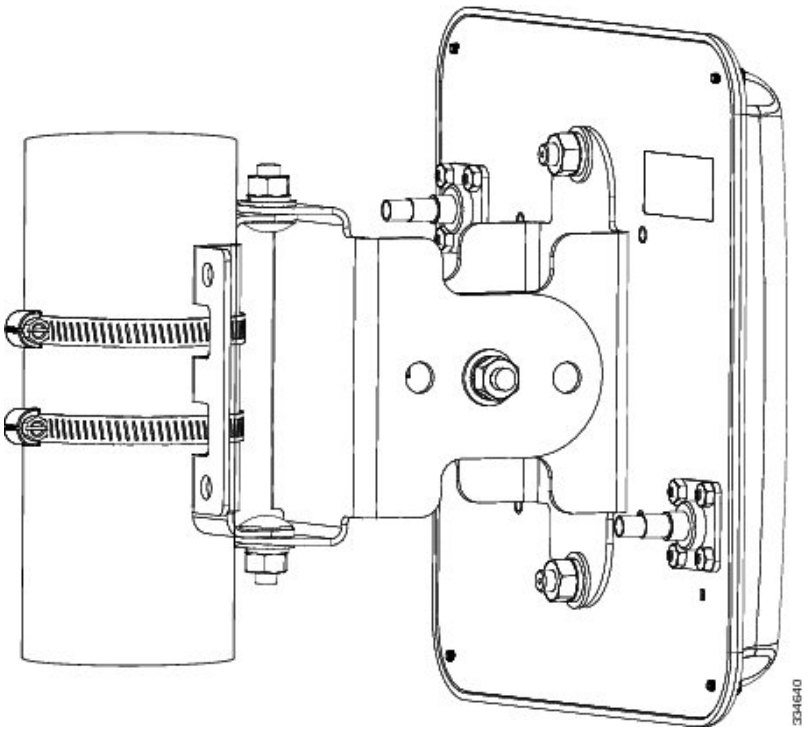

Note Cisco recommends grounding the antenna.

Installing the Optional Mounting Bracket Kit

Using an optional antenna mounting bracket kit, the AIR-ANT5114P2M-N antenna can be mounted directly on an access point in a strand mount or pole mount environment. The antenna bracket kit contains four bracket sections and fasteners that you can assemble in multiple configurations to position and aim the directional antenna in a range of positions. For more information on mounting the antenna with the optional mounting bracket, refer to *Installing Antenna Brackets on Cisco 1550 Series Outdoor Mesh Access Points.*

Mounting on a Vertical Surface

The antenna can be wall mounted. Hardware is not included for wall-mount installation.

To mount your antenna on a vertical surface:

Step 1 Remove antenna and mount kit from packaging.

Step 2 Attach antenna mount bracket to the back of the antenna as previously shown, applying a maximum nut-tightening torque of 55 in lbf (6.2 Nm).

Step 3 Attach elevation adjustable bracket (B) as previously shown, and loosely secure hardware. The carriage bolt square holes must be on the inside.

Step 4 Using the appropriate customer-supplied anchors and screws, attach the azimuth adjustable bracket to the wall as shown in the following:

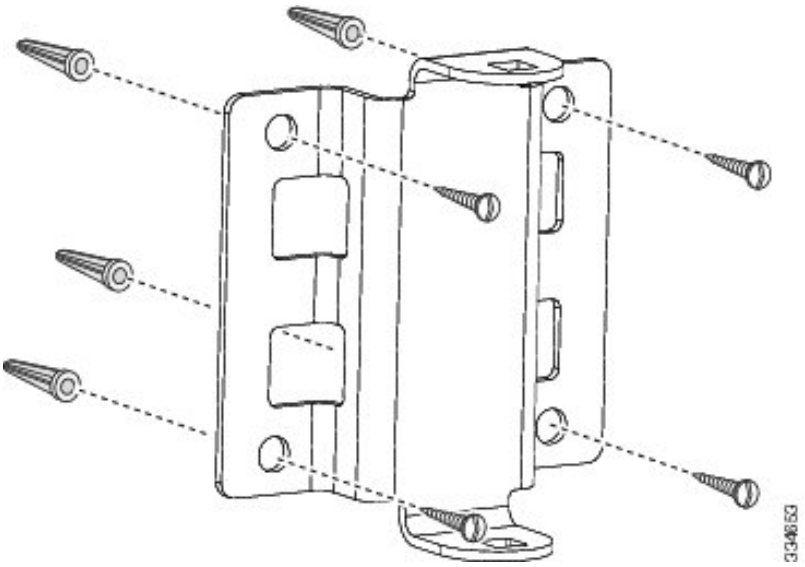

The following figure shows, in inches, the distance between the bracket mounting holes.

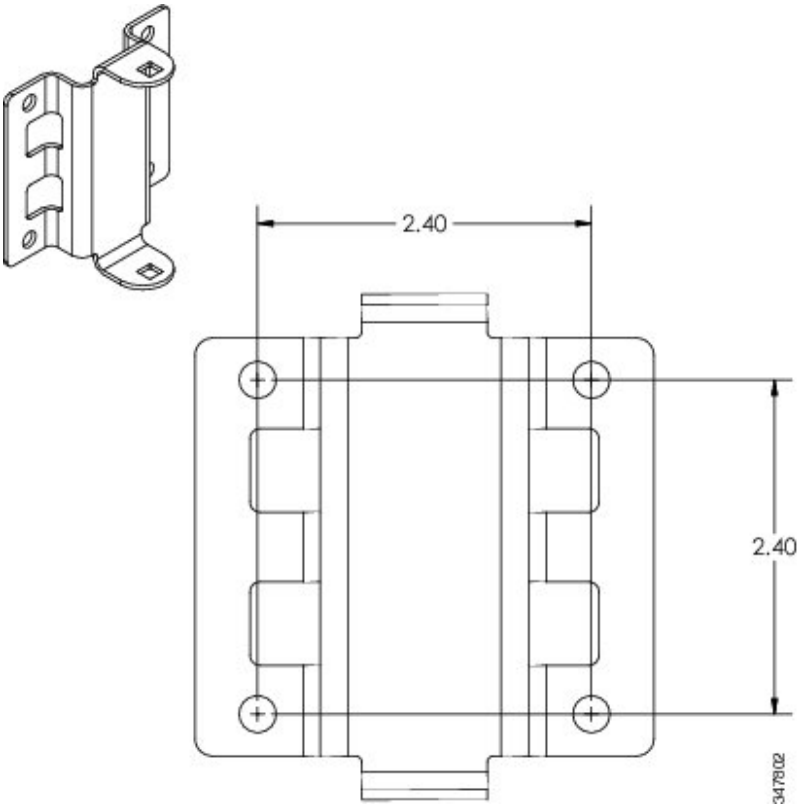

Step 5 Attach antenna assembly to azimuth bracket, as previously shown.

Step 6 Adjust the position of the antenna to the desired azimuth and elevation angles and tighten all pivot hardware (4 places) to a maximum torque of 55 in lbf (6.2 Nm). The bracket allows the antenna position to be adjustable to +/–45 degrees azimuth and +/–60 degrees elevation.

Note Cisco recommends grounding the antenna.

Antenna Cable Information

If the antenna is used with the Cisco 1552CU or 1552EU access point, the port A of the antenna must be connected to port 1 of the access point, port B of the antenna must be connected to port 3 of the access point, and port 2 of the access point must be capped with the cap enclosed with the antenna.

Note Coaxial cable loses efficiency as the frequency increases, resulting in signal loss. Keep the cable as short as possible because cable length also causes signal loss (the longer the run, the greater the loss).

Note The antenna cable has a 0.5 in. (12.7 mm) bend radius. Sharply bending or crimping the cable may cause a degradation in performance.

The antenna terminates with an N-male plug after a short, 2.5 foot (0.76 m) cable. The mating connector to the antenna is an appropriate N-female jack. The connector on the opposite end will vary according to the type of equipment used.

After the cable is attached to the antenna, ensure that the connections are sealed (if outdoors) to prevent moisture and other weathering elements from affecting performance. Cisco recommends using a coax seal (such as CoaxSeal) for outdoor connections. Silicone sealant or electrical tape are **not** recommended for sealing outdoor connections.

Grounding the Antenna

To ground the antenna in accordance with national electrical code instructions:

1. Use No. 10 AWG copper or No. 8 or larger copper-clad steel or bronze wire as ground wires for both mast and lead-in. Securely clamp the wire to the bottom of the mast.
2. Secure the lead-in wire to an antenna discharge unit and the mast ground wire to the building with stand-off insulators spaced from 4 foot (1.2 m) to 8 foot (2.4 m) apart.
3. Mount the antenna discharge unit as close as possible to where the lead-in wire enters the building.
4. Drill a hole in the building wall as close as possible to the equipment to which you will connect the lead-in cable.

Caution There may be wires in the wall. Ensure that your drilling location is clear of obstruction or other hazards.

5. Pull the cable through the hole and form a drip loop close to where it enters the building.
6. Thoroughly waterproof the lead-in area.
7. Install a lightning arrestor.

8. Connect the lead-in cable to the equipment.

Communications, Services, and Additional Information

- To receive timely, relevant information from Cisco, sign up at Cisco Profile Manager.
- To get the business impact you're looking for with the technologies that matter, visit Cisco Services.
- To submit a service request, visit Cisco Support.
- To discover and browse secure, validated enterprise-class apps, products, solutions, and services, visit Cisco DevNet.
- To obtain general networking, training, and certification titles, visit Cisco Press.
- To find warranty information for a specific product or product family, access Cisco Warranty Finder.

Cisco Bug Search Tool

Cisco Bug Search Tool (BST) is a web-based tool that acts as a gateway to the Cisco bug tracking system that maintains a comprehensive list of defects and vulnerabilities in Cisco products and software. BST provides you with detailed defect information about your products and software.

Documentation Feedback

To provide feedback about Cisco technical documentation, use the feedback form available in the right pane of every online document.

Cisco Support Community

Cisco Support Community is a forum for you to ask and answer questions, share suggestions, and collaborate with your peers. Join the forum at https://supportforums.cisco.com/index.jspa.

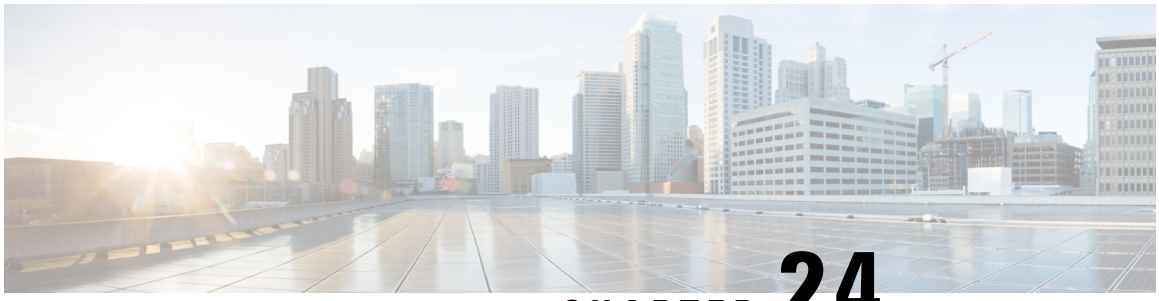

CHAPTER 24

Cisco Aironet Omnidirectional Antennas AIR-ANT5150VG-N and AIR-ANT5150HG-N

This chapter contains the following:

- Overview, on page 417
- Technical Specifications, on page 418
- Radiation Patterns, on page 419
- System Requirements, on page 420
- General Safety Precautions, on page 420
- Guidelines to Achieving Optimal RF and Antenna Performance, on page 422
- Installation Notes, on page 425
- Communications, Services, and Additional Information, on page 426

Overview

This section describes the Cisco Aironet AIR-ANT5150VG-N and AIR-ANT5150HG-N Omnidirectional Antennas and provides instructions for mounting. The antennas are designed for outdoor use with Cisco Aironet Outdoor Access Points (hereafter referred to as access points) with radios operating in the 5 GHz frequency band.

Figure 158: Cisco Aironet AIR-ANT5150 Series Antenna



Technical Specifications

Specification	AIR-ANT5150VG-N	AIR-ANT5150HG-N
Antenna Type	Omnidirectional	Omnidirectional
Operating Frequency Range	5150 - 5925 MHz	5150 - 5925 MHz
Maximum VSWR	2:1	2:1
Gain	5 dBi	5 dBi
Polorization	Vertical	Horizontal
Maximum Azimuth Plane Ripple	3.3 dB	3.3 dB
Elevation Plane 3 dB Beamwidth	33°	35°
Azimuth Plane 3 dB Beamwidth	Omnidirectional	Omnidirectional
Length	7.88 in (200.2 mm)	7.88 in (200.2 mm)
Diameter	1.0 in (25.4 mm)	1.0 in (25.4 mm)
Weight	3.5 oz. (0.1 kg)	3.5 oz. (0.1 kg)
Connector	N-Male	N-Male
Operational Temperature	-40° to +158°F (-40°C to +70°C)	-40° to +158°F (-40°C to +70°C)

Specification	AIR-ANT5150VG-N	AIR-ANT5150HG-N
Storage Temperature	-40° to +185°F (-40°C to +85°C)	-40° to +185°F (-40°C to +85°C)
Water/Foreign Body Ingress	IP67	IP67
Wind Rating (Operational)	100 mph (161 kph)	100 mph (161 kph)

Radiation Patterns

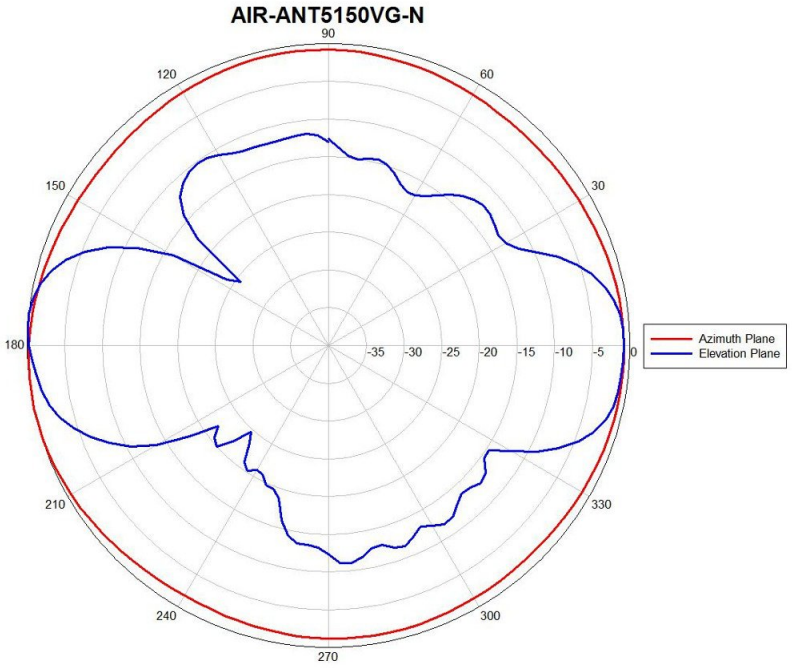

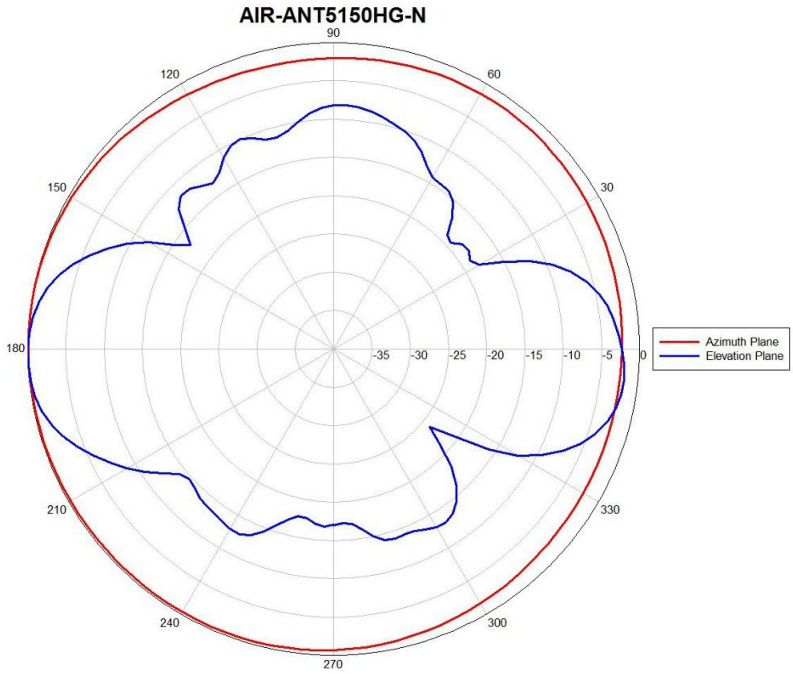

System Requirements

This antenna is designed for use with the Cisco Aironet Outdoor Access Points.

General Safety Precautions

Warning This warning symbol means danger. You are in a situation that could cause bodily injury. Before you work on any equipment, be aware of the hazards involved with electrical circuitry and be familiar with standard practices for preventing accidents. Use the statement number provided at the end of each warning to locate its translation in the translated safety warnings that accompanied this device. **Statement 1071**

Warning Do not work on the system or connect or disconnect cables during periods of lightning activity. **Statement 1001**

Warning Do not locate the outdoor antenna near overhead power lines or other electric light or power circuits, or where it can come into contact with such circuits. When installing the antenna, take extreme care not to come into contact with such circuits, as they may cause serious injury or death. For proper installation and grounding of the antenna, please refer to national and local codes (for example, U.S.:NFPA 70, National Electrical Code, Article 810, Canada:Canadian Electrical Code, Section 54). **Statement 1052**

Warning In order to comply with FCC radio frequency (RF) exposure limits, antennas should be located at a minimum of 7.9 inches (20 cm) or more from the body of all persons. **Statement 332**

Note For your safety, and to help you achieve a good installation, please read and follow these safety precautions.

Mast Mounted or Building Mounted Installations

The following instructions are common to most mast mounted or building mounted installations. For specific installation instructions for each antenna, see the antenna data-sheet and the router hardware installation guide.

- Find someone to help you—installing an antenna is often a two-person job.
- Select your installation site with safety, as well as performance, in mind. Remember that electric power lines and phone lines look alike. For your safety, assume that any overhead line can kill you.
- Contact your electric power company. Tell them your plans and ask them to come look at your proposed installation.
- Do not use a metal ladder.
- Do not work on a wet or windy day.
- Do dress properly—wear shoes with rubber soles and heels, rubber gloves, and a long-sleeved shirt or jacket.
- If the assembly starts to drop, move away from it and let it fall. Because the antenna, mast, cable, and metal guy wires are all excellent conductors of electrical current, even the slightest touch of any of these parts to a power line completes an electrical path through the antenna and the installer.
- If any part of the antenna system should come in contact with a power line, do not touch it or try to remove it yourself. Call your local power company to have it removed safely.
- If an accident should occur with the power lines, call for qualified emergency help immediately.
- Assemble your new antenna on the ground or a level surface at the installation site.
- Connect its coaxial cable while you are on the ground and attach the antenna to the mast.
- Ensure that the mast does not fall as you raise or remove it. Use a durable non-conductive rope secured at each two foot level as the mast is raised. Have an assistant tend the rope, ready to pull the mast clear of any hazards (such as power lines) should it begin to fall.
- Use the mounting bracket provided with the antenna.
- If the installation will use guy wires:
  - Install guy anchor bolts.
  - Estimate the length of guy wire and cut it before raising the mast.
  - Attach guy wires to a mast using guy rings.
  - In the case of a guyed (tall, thin mast) installation, you must have at least one assistant to hold the mast upright while the guy wires are attached and tightened to the anchor bolts.

- Attach a “DANGER” label at eye level on the mast.
- Install ground rods to remove any static electricity buildup and connect a ground wire to the mast and ground rod. Use ground rods designed for that purpose, not a spare piece of pipe.

Unused Antenna Ports

Port plugs must be installed in any unused antenna ports.

The weatherproof caps on the connectors protect the router interior from environmental elements including water, heat, cold, and dust. They are installed on unused ports before the router is shipped.

When you install a new antenna in a port with an N-connector:

- Chassis-mounted antennas—Remove the weather proof cap before installing a chassis-mounted antenna.
- External antennas—Remove weatherproof cap, then connect the supported Cisco cable to the connector.

Guidelines to Achieving Optimal RF and Antenna Performance

Antennas are a critical component of a wireless communication system. Selecting a suitable antenna, an optimal antenna location, or antenna site is essential for optimum performance of a wireless links.

This section covers general tips for optimizing RF performance of indoor and outdoor terrestrial radio systems in the 400-7125 MHz frequency range. Examples of terrestrial radio systems include 4G LTE, 5G NR, Wi-Fi, LoRa, LR-WPAN and similar. In this context GPS SPS would not be considered a terrestrial system as the signal is received from space, not from another terrestrial site.

Because the antenna transmits and receives radio signals over the air, overall RF performance of the link is susceptible to RF obstructions and common sources of RF interference that can reduce throughput and range of the system.

Follow these guidelines to optimize performance. When in doubt, consult a qualified RF professional, and check with your solution partner for specific recommendations.

Antenna Model Selection and Performance

Consider the following when planning your installation:

- When selecting the antenna, ensure that it covers the frequency ranges or frequency bands of interest, and that it has good RF parameters such as antenna efficiency, VSWR and suitable radiation pattern for every frequency range that your application will use with this antenna.
- Antenna pattern is important. Omni-directional antennas have lower gain, but allow communicating to devices in all azimuth directions. Directional antennas concentrate the beam in a specific direction, making them ideal for point to point communication.
- When a system has multiple RF ports for receive and / or transmit, as is the case for 4G LTE , 5G NR or Wi-Fi, it is highly recommended to populate all the RF ports with suitable antennas to take advantage of MIMO, rather than rely on a single port or single antenna to save on cost. Please see the MIMO section for a detailed description of MIMO benefits.
- For RF systems that support multiple RF ports and multiple RF standards such as LTE, Wi-Fi, and GPS: consider using a multi-element antenna that integrates multiple antennas under the same radome (cover).

Doing so may reduce cost compared to deploying and mounting a discrete single port antenna for every RF port.

- For communication between fixed infrastructure devices, such as mesh nodes or a point-to-point backhaul link, each device should have an antenna with the same polarization. If communicating with mobile devices that might be randomly oriented, consider dual-polarized antennas, such as those with both vertical and horizontal or slant +45° and -45° polarized elements.

Antenna Environmental Specifications

The selected antenna must have suitable mechanical and environmental specifications for the environment where it will be deployed. For example, shock and vibration specifications for transportation, corrosion resistant construction for marine and oil and gas industries, or IP (ingress protection) rating for outdoor deployment. Indoor antennas are typically not suitable for harsh industrial environments. Please check with your system integrator for environmental requirements for your application.

Antenna Accessories and Mounting

Consider the following when planning your installation:

- Carefully consider what type of other RF accessories, besides antenna, such as RF cables, lightning arrestors or RF adapters may be required in your installations. It is best to minimize long RF cable runs due to RF signal losses in the cable. Thinner RF cables have more RF loss , thicker cables are less flexible and more expensive.
- Carefully consider how the antenna will be physically mounted, as this may affect antenna selection. For example, a stud mount mechanical mounting design is a better fit for mounting on top of an electrical cabinet than a mast mount antenna.
- For outdoor deployments, follow installation instructions for the antenna. It is good practice to keep protective covers on the radio's RF ports and any antenna or accessory RF ports until the moment the interfaces are mated. This reduces chances of contamination, trapping water or condensation inside the connector, or accidental damage to RF interfaces.

MIMO Performance and Arrays

MIMO systems deliver benefits of higher SNR, higher reliability and higher throughput compared to single antenna systems. In more technical terms, MIMO delivers array gain, diversity gain and multiplexing gain compared to single antenna.

- Array gain — Improvement in SNR (signal to noise ratio) by coherently combining signals from multiple antennas. For example, increasing SNR through beamforming techniques.
- Diversity gain — Improvement in reliability by mitigating deep fading or strong destructive EM wave interference. For example, in a two-antenna system, if one antenna is experiencing deep fading due to an EM destructive null at its location at a given instant, the other antenna is unlikely to have a null at the same instant, and the combined SNR stays at a reliable level. In contrast, a single antenna would see SNR oscillating between good SNR and very poor SNR and reliability would degrade.
- Multiplexing gain — Increase in system capacity or throughput by sending independent data over multiple spatial streams simultaneously. The number of streams cannot be more than the number of antennas. For example, to support three spatial streams, a minimum of three antennas is required. Often there may be additional antennas for diversity or redundancy, such as in the case of 4x4:3, or 4x4 MIMO with 3 spatial streams.

If deploying multiple single-element antennas for a MIMO system in an array, ensure sufficient spacing between the antennas. Omnidirectional elements should generally be at least one wavelength apart at the lowest operating frequency.

Consider the following:

- For Wi-Fi systems operating in the 2.4, 5, and/or 6 GHz bands, space elements at least 5 inches (12.5 cm) apart.
- For 4G LTE and 5G systems with the lowest operating frequency of 617 MHz , space elements at least 20 inches (50 cm) apart.
- Note that spacing between elements inside multi-element MIMO antennas is often less than one wavelength. However multi-element antennas are engineered with MIMO performance in mind, by providing antenna diversity through pattern, polarization, and isolation between MIMO elements.

Antenna siting and location

Consider the following when planning your installation:

- Plan antenna location ahead of time. Ideal location for an antenna is in LOS (line of sight) of the counterpart that it is trying to communicate with. Under LOS conditions the signals propagate directly between the two communication nodes, without relying on signal bouncing off a wall or other structure to reach the counterpart. This is sometimes not possible to achieve in practice, but it is a useful goal to keep in mind when optimizing antenna location.
- While it is good to keep RF cables short, it is most desirable for an antenna to be in the best location it can be to provide the desired coverage.
- For large deployments involving multiple units communicating with each other across a complex urban or industrial landscape, consider running an RF propagation modeling study to predict approximate simulated coverage maps and determine initial placement of the units. A propagation study may help reduce overall deployment cost by discovering and mitigating issues with RF coverage before the infrastructure is physically installed.
- Keep the antenna away from metal obstructions such as heating and air-conditioning ducts, large ceiling trusses, building superstructures, and major power cabling runs. One exception is if the antenna is designed to be mounted on a ground plane. If mounting on a ground plane, mount the antenna on a flat metal surface away from adjacent obstructions.
- It is strongly recommended not to install antennas directly on the router or access point (AP), unless the router or AP is specifically engineered to directly mount the antennas. Products that are engineered for direct mounting of antennas specifically address each of the below issues.
- Reasons to mount antennas away from the router include:
  - Router location may not be optimal location for antenna to communicate with the counterpart wirelessly, so router and antenna may need to be in different locations.
  - Router may have a clutter of Ethernet cable and power cables around it, which will obstruct antenna signal.
  - A number of routers, such as the IR1835, are modular. They have plug-in RF modules for Wi-Fi , 4G LTE or 5G NR such as WP-WIFI6, P-LTEAP18-GL, P-5GS6-GL. These modules have RF connectors spaced close together, and while it is mechanically possible to install four or five antennas directly attached, this will result in significant degradation to RF performance of antennas due to

mutual de-tuning between closely spaced antennas. It is strongly recommended to install antennas away from the chassis in modular cases.

- If installing an antenna indoors, consider that the density and electromagnetic properties of the materials used in the building construction determines the number of walls the signal can pass through and still maintain adequate coverage.
  - Paper and vinyl walls have very little effect on signal penetration.
  - Solid and pre-cast concrete walls limit signal penetration to one or two walls without degrading coverage.
  - Concrete and wood block walls limit signal penetration to three or four walls.
  - A signal can penetrate five or six walls constructed of drywall or wood.
  - A thick metal wall causes signals to reflect off, causing poor penetration.
  - A chain link fence or wire mesh spaced between 1 and 1 1/2 in. (2.5 and 3.8 cm) acts as a harmonic reflector that blocks a 2.4-GHz radio signal.
  - Install the antenna away from microwave ovens and 2-GHz cordless phones. These products can cause signal interference because they operate in the same frequency range as the device your antenna is connected to.

Installation Notes

The antenna is designed to connect to a dedicated antenna port on the access point. No special tools are required to install the antenna.

The antenna is resistant to the full range of outdoor environments. After the antenna is attached to the access point, seal the connections to prevent moisture and other weathering elements from affecting performance. Cisco recommends using a coax seal (such as CoaxSeal) for outdoor connections. Silicone sealant or electrical tape are not recommended for sealing outdoor connections.

Tools and Equipment Required

No tools are required to mount the antenna to the access point. However, you may need a ¾-in. (19-mm) open end or combination wrench (or adjustable wrench) to remove the antenna port covers.

For information about tools required to mount the access point, see the appropriate access point documentation.

Mounting the Antenna

To connect the antenna to the access point, follow these steps:

1. If necessary, remove the antenna port cover.
2. Align the antenna's N connector with the appropriate antenna port.
3. Gently push the antenna into the port.
4. Hand-tighten the antenna.

Communications, Services, and Additional Information

- To receive timely, relevant information from Cisco, sign up at Cisco Profile Manager.
- To get the business impact you're looking for with the technologies that matter, visit Cisco Services.
- To submit a service request, visit Cisco Support.
- To discover and browse secure, validated enterprise-class apps, products, solutions, and services, visit Cisco DevNet.
- To obtain general networking, training, and certification titles, visit Cisco Press.
- To find warranty information for a specific product or product family, access Cisco Warranty Finder.

Cisco Bug Search Tool

Cisco Bug Search Tool (BST) is a web-based tool that acts as a gateway to the Cisco bug tracking system that maintains a comprehensive list of defects and vulnerabilities in Cisco products and software. BST provides you with detailed defect information about your products and software.

Documentation Feedback

To provide feedback about Cisco technical documentation, use the feedback form available in the right pane of every online document.

Cisco Support Community

Cisco Support Community is a forum for you to ask and answer questions, share suggestions, and collaborate with your peers. Join the forum at https://supportforums.cisco.com/index.jspa.

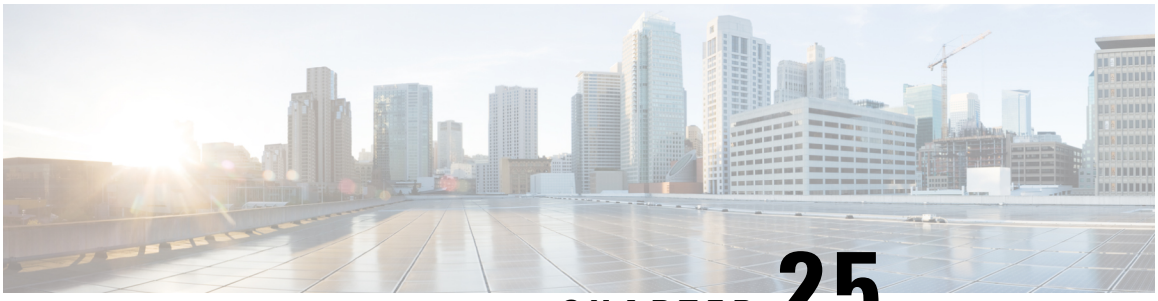

CHAPTER 25

Cisco Aironet 8-dBi Omnidirectional Antenna (AIR-ANT5180V-N)

This chapter contains the following:

- Overview, on page 427
- Technical Specifications, on page 428
- Radiation Patterns, on page 429
- System Requirements, on page 430
- General Safety Precautions, on page 430
- Guidelines to Achieving Optimal RF and Antenna Performance, on page 432
- Installation Notes, on page 435
- Communications, Services, and Additional Information, on page 438

Overview

This section describes the Cisco Aironet AIR-ANT5180V-N 8-dBi Omnidirectional Antenna and provides instructions for mounting it. The antenna operates in the 5-GHz frequency range and is designed for outdoor use with the Cisco Aironet 1520 Series Outdoor Mesh Access Point (hereafter referred to as the access point).



Technical Specifications

Antenna type	Omnidirectional colinear array
Operating frequency range	4900–5850 MHz
1.7:1 VSWR bandwidth	4900–5850 MHz
Nominal input impedance	50 Ohms
Gain (4900–5000 MHz)	7-dBi
Gain (5400–5850 MHz)	8-dBi
Polarization	Linear
E-plane 3-dB beamwidth	16°
H-plane 3-dB bandwidth	Omnidirectional
Length	11.0 in. (27.9 cm)
Diameter	1.0 in. (2.54 cm)
Weight	6.0 oz. (160.0 g)
Connector type	N-Male

Operating temperature	–22°F - 158°F (–30°C - 70°C)
Wind rating	125 mph (201 kmh)operational165 mph (265 kmh)survival

Radiation Patterns

Figure 159: Azimuth Radiation Pattern

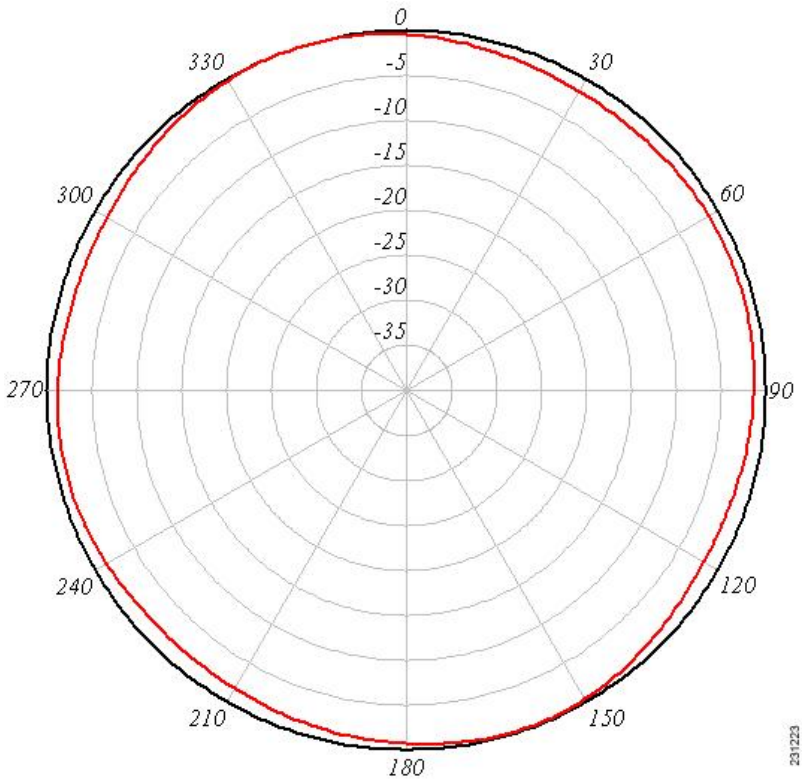

Figure 160: Elevation Radiation Pattern

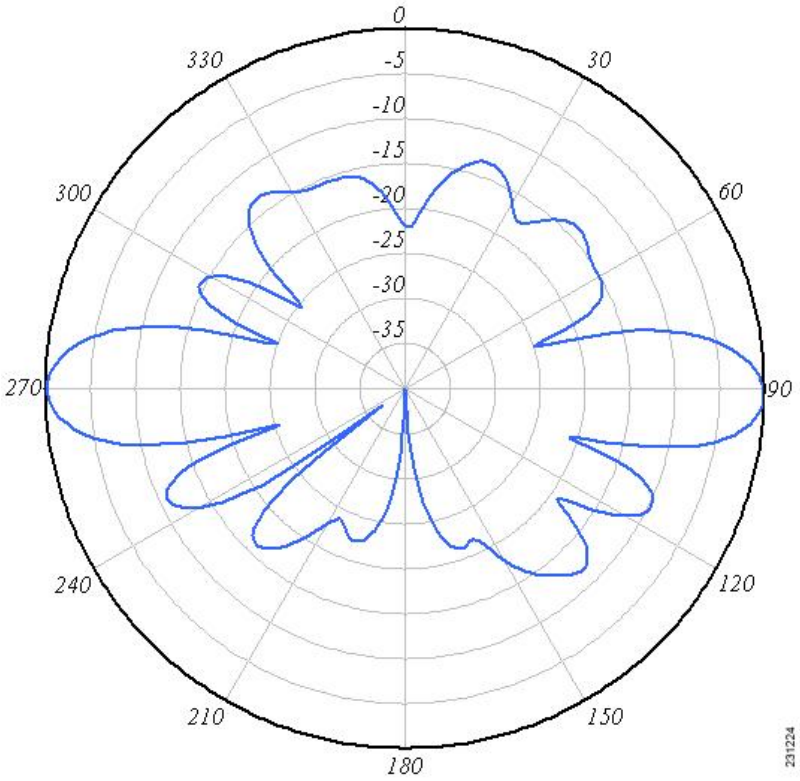

System Requirements

This antenna is designed for use with the Cisco Aironet 1520 Outdoor Mesh Access Points. The antenna is compatible with Cisco Aironet 1505 and 1510 Outdoor Mesh Access Points.

General Safety Precautions

Warning This warning symbol means danger. You are in a situation that could cause bodily injury. Before you work on any equipment, be aware of the hazards involved with electrical circuitry and be familiar with standard practices for preventing accidents. Use the statement number provided at the end of each warning to locate its translation in the translated safety warnings that accompanied this device. **Statement 1071**

Warning Do not work on the system or connect or disconnect cables during periods of lightning activity. **Statement 1001**

Warning Do not locate the outdoor antenna near overhead power lines or other electric light or power circuits, or where it can come into contact with such circuits. When installing the antenna, take extreme care not to come into contact with such circuits, as they may cause serious injury or death. For proper installation and grounding of the antenna, please refer to national and local codes (for example, U.S.:NFPA 70, National Electrical Code, Article 810, Canada:Canadian Electrical Code, Section 54). **Statement 1052**

Warning In order to comply with FCC radio frequency (RF) exposure limits, antennas should be located at a minimum of 7.9 inches (20 cm) or more from the body of all persons. **Statement 332**

Note For your safety, and to help you achieve a good installation, please read and follow these safety precautions.

Mast Mounted or Building Mounted Installations

The following instructions are common to most mast mounted or building mounted installations. For specific installation instructions for each antenna, see the antenna data-sheet and the router hardware installation guide.

- Find someone to help you—installing an antenna is often a two-person job.
- Select your installation site with safety, as well as performance, in mind. Remember that electric power lines and phone lines look alike. For your safety, assume that any overhead line can kill you.
- Contact your electric power company. Tell them your plans and ask them to come look at your proposed installation.
- Do not use a metal ladder.
- Do not work on a wet or windy day.
- Do dress properly—wear shoes with rubber soles and heels, rubber gloves, and a long-sleeved shirt or jacket.
- If the assembly starts to drop, move away from it and let it fall. Because the antenna, mast, cable, and metal guy wires are all excellent conductors of electrical current, even the slightest touch of any of these parts to a power line completes an electrical path through the antenna and the installer.
- If any part of the antenna system should come in contact with a power line, do not touch it or try to remove it yourself. Call your local power company to have it removed safely.
- If an accident should occur with the power lines, call for qualified emergency help immediately.
- Assemble your new antenna on the ground or a level surface at the installation site.
- Connect its coaxial cable while you are on the ground and attach the antenna to the mast.
- Ensure that the mast does not fall as you raise or remove it. Use a durable non-conductive rope secured at each two foot level as the mast is raised. Have an assistant tend the rope, ready to pull the mast clear of any hazards (such as power lines) should it begin to fall.
- Use the mounting bracket provided with the antenna.

- If the installation will use guy wires:
  - Install guy anchor bolts.
  - Estimate the length of guy wire and cut it before raising the mast.
  - Attach guy wires to a mast using guy rings.
  - In the case of a guyed (tall, thin mast) installation, you must have at least one assistant to hold the mast upright while the guy wires are attached and tightened to the anchor bolts.
- Attach a “DANGER” label at eye level on the mast.
- Install ground rods to remove any static electricity buildup and connect a ground wire to the mast and ground rod. Use ground rods designed for that purpose, not a spare piece of pipe.

Unused Antenna Ports

Port plugs must be installed in any unused antenna ports.

The weatherproof caps on the connectors protect the router interior from environmental elements including water, heat, cold, and dust. They are installed on unused ports before the router is shipped.

When you install a new antenna in a port with an N-connector:

- Chassis-mounted antennas—Remove the weather proof cap before installing a chassis-mounted antenna.
- External antennas—Remove weatherproof cap, then connect the supported Cisco cable to the connector.

Guidelines to Achieving Optimal RF and Antenna Performance

Antennas are a critical component of a wireless communication system. Selecting a suitable antenna, an optimal antenna location, or antenna site is essential for optimum performance of a wireless links.

This section covers general tips for optimizing RF performance of indoor and outdoor terrestrial radio systems in the 400-7125 MHz frequency range. Examples of terrestrial radio systems include 4G LTE, 5G NR, Wi-Fi, LoRa, LR-WPAN and similar. In this context GPS SPS would not be considered a terrestrial system as the signal is received from space, not from another terrestrial site.

Because the antenna transmits and receives radio signals over the air, overall RF performance of the link is susceptible to RF obstructions and common sources of RF interference that can reduce throughput and range of the system.

Follow these guidelines to optimize performance. When in doubt, consult a qualified RF professional, and check with your solution partner for specific recommendations.

Antenna Model Selection and Performance

Consider the following when planning your installation:

- When selecting the antenna, ensure that it covers the frequency ranges or frequency bands of interest, and that it has good RF parameters such as antenna efficiency, VSWR and suitable radiation pattern for every frequency range that your application will use with this antenna.

- Antenna pattern is important. Omni-directional antennas have lower gain, but allow communicating to devices in all azimuth directions. Directional antennas concentrate the beam in a specific direction, making them ideal for point to point communication.
- When a system has multiple RF ports for receive and / or transmit, as is the case for 4G LTE , 5G NR or Wi-Fi, it is highly recommended to populate all the RF ports with suitable antennas to take advantage of MIMO, rather than rely on a single port or single antenna to save on cost. Please see the MIMO section for a detailed description of MIMO benefits.
- For RF systems that support multiple RF ports and multiple RF standards such as LTE, Wi-Fi, and GPS: consider using a multi-element antenna that integrates multiple antennas under the same radome (cover). Doing so may reduce cost compared to deploying and mounting a discrete single port antenna for every RF port.
- For communication between fixed infrastructure devices, such as mesh nodes or a point-to-point backhaul link, each device should have an antenna with the same polarization. If communicating with mobile devices that might be randomly oriented, consider dual-polarized antennas, such as those with both vertical and horizontal or slant +45° and -45° polarized elements.

Antenna Environmental Specifications

The selected antenna must have suitable mechanical and environmental specifications for the environment where it will be deployed. For example, shock and vibration specifications for transportation, corrosion resistant construction for marine and oil and gas industries, or IP (ingress protection) rating for outdoor deployment. Indoor antennas are typically not suitable for harsh industrial environments. Please check with your system integrator for environmental requirements for your application.

Antenna Accessories and Mounting

Consider the following when planning your installation:

- Carefully consider what type of other RF accessories, besides antenna, such as RF cables, lightning arrestors or RF adapters may be required in your installations. It is best to minimize long RF cable runs due to RF signal losses in the cable. Thinner RF cables have more RF loss , thicker cables are less flexible and more expensive.
- Carefully consider how the antenna will be physically mounted, as this may affect antenna selection. For example, a stud mount mechanical mounting design is a better fit for mounting on top of an electrical cabinet than a mast mount antenna.
- For outdoor deployments, follow installation instructions for the antenna. It is good practice to keep protective covers on the radio’s RF ports and any antenna or accessory RF ports until the moment the interfaces are mated. This reduces chances of contamination, trapping water or condensation inside the connector, or accidental damage to RF interfaces.

MIMO Performance and Arrays

MIMO systems deliver benefits of higher SNR, higher reliability and higher throughput compared to single antenna systems. In more technical terms, MIMO delivers array gain, diversity gain and multiplexing gain compared to single antenna.

- Array gain — Improvement in SNR (signal to noise ratio) by coherently combining signals from multiple antennas. For example, increasing SNR through beamforming techniques.

- Diversity gain — Improvement in reliability by mitigating deep fading or strong destructive EM wave interference. For example, in a two-antenna system, if one antenna is experiencing deep fading due to an EM destructive null at its location at a given instant, the other antenna is unlikely to have a null at the same instant, and the combined SNR stays at a reliable level. In contrast, a single antenna would see SNR oscillating between good SNR and very poor SNR and reliability would degrade.
- Multiplexing gain — Increase in system capacity or throughput by sending independent data over multiple spatial streams simultaneously. The number of streams cannot be more than the number of antennas. For example, to support three spatial streams, a minimum of three antennas is required. Often there may be additional antennas for diversity or redundancy, such as in the case of 4x4:3, or 4x4 MIMO with 3 spatial streams.

If deploying multiple single-element antennas for a MIMO system in an array, ensure sufficient spacing between the antennas. Omnidirectional elements should generally be at least one wavelength apart at the lowest operating frequency.

Consider the following:

- For Wi-Fi systems operating in the 2.4, 5, and/or 6 GHz bands, space elements at least 5 inches (12.5 cm) apart.
- For 4G LTE and 5G systems with the lowest operating frequency of 617 MHz , space elements at least 20 inches (50 cm) apart.
- Note that spacing between elements inside multi-element MIMO antennas is often less than one wavelength. However multi-element antennas are engineered with MIMO performance in mind, by providing antenna diversity through pattern, polarization, and isolation between MIMO elements.

Antenna siting and location

Consider the following when planning your installation:

- Plan antenna location ahead of time. Ideal location for an antenna is in LOS (line of sight) of the counterpart that it is trying to communicate with. Under LOS conditions the signals propagate directly between the two communication nodes, without relying on signal bouncing off a wall or other structure to reach the counterpart. This is sometimes not possible to achieve in practice, but it is a useful goal to keep in mind when optimizing antenna location.
- While it is good to keep RF cables short, it is most desirable for an antenna to be in the best location it can be to provide the desired coverage.
- For large deployments involving multiple units communicating with each other across a complex urban or industrial landscape, consider running an RF propagation modeling study to predict approximate simulated coverage maps and determine initial placement of the units. A propagation study may help reduce overall deployment cost by discovering and mitigating issues with RF coverage before the infrastructure is physically installed.
- Keep the antenna away from metal obstructions such as heating and air-conditioning ducts, large ceiling trusses, building superstructures, and major power cabling runs. One exception is if the antenna is designed to be mounted on a ground plane. If mounting on a ground plane, mount the antenna on a flat metal surface away from adjacent obstructions.
- It is strongly recommended not to install antennas directly on the router or access point (AP), unless the router or AP is specifically engineered to directly mount the antennas. Products that are engineered for direct mounting of antennas specifically address each of the below issues.

- Reasons to mount antennas away from the router include:
  - Router location may not be optimal location for antenna to communicate with the counterpart wirelessly, so router and antenna may need to be in different locations.
  - Router may have a clutter of Ethernet cable and power cables around it, which will obstruct antenna signal.
  - A number of routers, such as the IR1835, are modular. They have plug-in RF modules for Wi-Fi , 4G LTE or 5G NR such as WP-WIFI6, P-LTEAP18-GL, P-5GS6-GL. These modules have RF connectors spaced close together, and while it is mechanically possible to install four or five antennas directly attached, this will result in significant degradation to RF performance of antennas due to mutual de-tuning between closely spaced antennas. It is strongly recommended to install antennas away from the chassis in modular cases.
- If installing an antenna indoors, consider that the density and electromagnetic properties of the materials used in the building construction determines the number of walls the signal can pass through and still maintain adequate coverage.
  - Paper and vinyl walls have very little effect on signal penetration.
  - Solid and pre-cast concrete walls limit signal penetration to one or two walls without degrading coverage.
  - Concrete and wood block walls limit signal penetration to three or four walls.
  - A signal can penetrate five or six walls constructed of drywall or wood.
  - A thick metal wall causes signals to reflect off, causing poor penetration.
  - A chain link fence or wire mesh spaced between 1 and 1 1/2 in. (2.5 and 3.8 cm) acts as a harmonic reflector that blocks a 2.4-GHz radio signal.
  - Install the antenna away from microwave ovens and 2-GHz cordless phones. These products can cause signal interference because they operate in the same frequency range as the device your antenna is connected to.

Installation Notes

The antenna is designed to connect to a dedicated antenna port on the access point. No special tools are required to install the antenna.

The antenna is resistant to the full range of outdoor environments. Therefore, Cisco does not recommend using cable or antenna waterproofing materials. Using such materials may cause important drainage holes to be blocked. Two drain holes are located on the antenna base.

Three drain holes are also located under the cap at the top of the antenna. These holes allow for proper drainage if the antenna is deployed with the cap pointing towards the ground.



Note Ensure that the cap is not damaged.

Figure 161: Antenna Drain Hole Locations

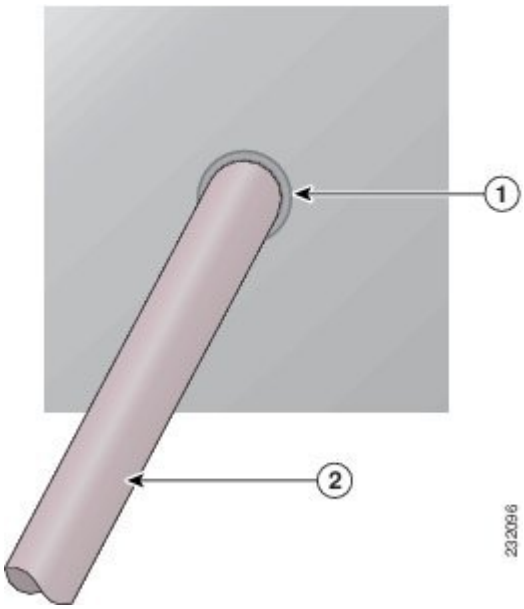

Figure 162: Antenna Drain Hole Locations

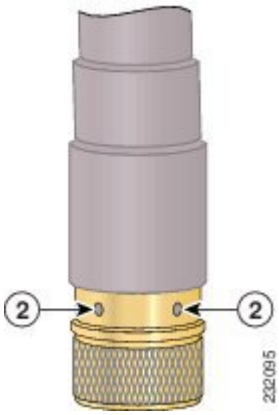

1	Antenna drain hole under the cap
2	Antenna drain holes at the base

Tools and Equipment Required

No tools are required to mount the antenna to the access point. However, you may need a ¾-in. (19-mm) open end or combination wrench (or adjustable wrench) to remove the antenna port covers.

For information about tools required to mount the access point, see the appropriate access point documentation.

Mounting the Antenna

The following figure identifies and shows the locations of the antenna ports when looking at the access point from the hinged cover side.

Figure 163: Antenna Port Locations

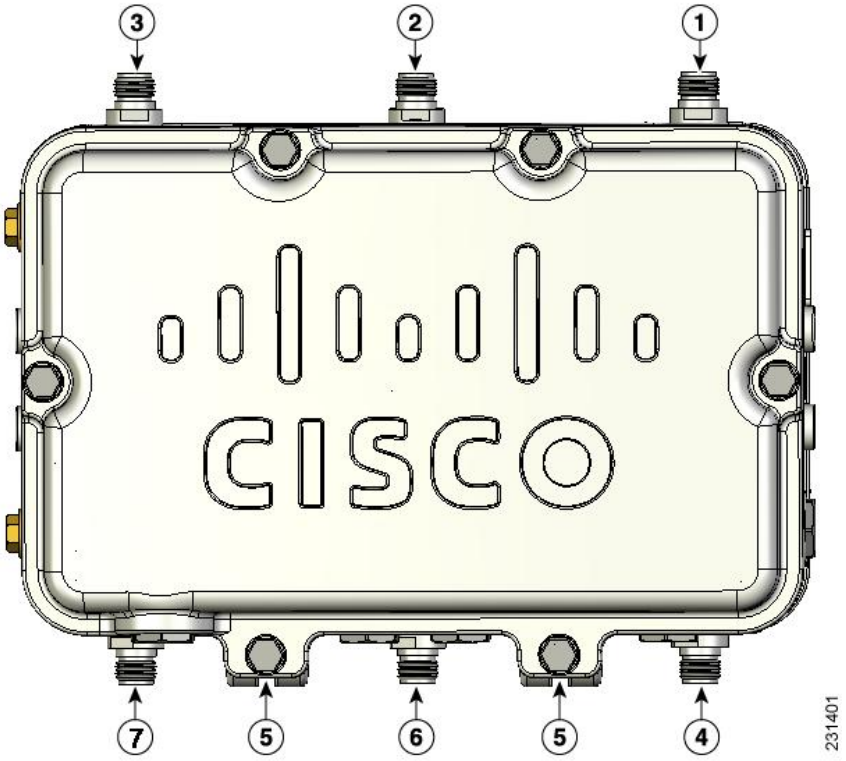

Installing the antennas depends on which type access point you are using. Two configurations are available: cable strand mount and pole mount. The following table shows the antenna port usage for these configurations.

Table 42: Antenna Port Usage Table

Antenna Port	Product Configuration	
1	2.4-GHz receive only	5-GHz receive and transmit
2	5-GHz transmit and receive	No connection
3	2.4-GHz transmit and receive	2.4-GHz receive only
4	No connection	2.4-GHz receive only
5	No connection	No connection
6	No connection	2.4-GHz transmit and receive

Follow these steps to connect the antenna to the access point.

1. If necessary, remove the antenna port covers.
2. Using the Antenna Port Usage Table as a guide, align the antenna's N connector with the appropriate 5-GHz antenna port.
3. Gently push the antenna into the port.
4. Tighten the antenna hand tight.

Communications, Services, and Additional Information

- To receive timely, relevant information from Cisco, sign up at Cisco Profile Manager.
- To get the business impact you're looking for with the technologies that matter, visit Cisco Services.
- To submit a service request, visit Cisco Support.
- To discover and browse secure, validated enterprise-class apps, products, solutions, and services, visit Cisco DevNet.
- To obtain general networking, training, and certification titles, visit Cisco Press.
- To find warranty information for a specific product or product family, access Cisco Warranty Finder.

Cisco Bug Search Tool

Cisco Bug Search Tool (BST) is a web-based tool that acts as a gateway to the Cisco bug tracking system that maintains a comprehensive list of defects and vulnerabilities in Cisco products and software. BST provides you with detailed defect information about your products and software.

Documentation Feedback

To provide feedback about Cisco technical documentation, use the feedback form available in the right pane of every online document.

Cisco Support Community

Cisco Support Community is a forum for you to ask and answer questions, share suggestions, and collaborate with your peers. Join the forum at https://supportforums.cisco.com/index.jspa.

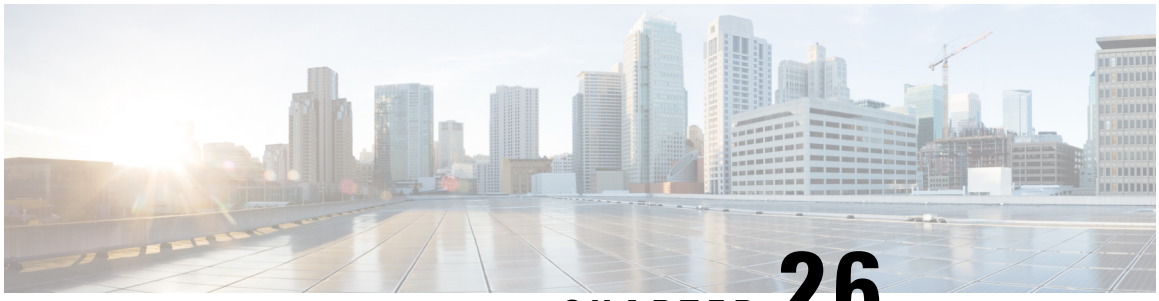

CHAPTER 26

Cisco ANT-5G-MP-OUT-N

This section contains the following:

- Overview, on page 439
- Technical Specifications, on page 440
- Radiation Patterns, on page 441
- Mechanical Drawing, on page 449
- System Requirements, on page 450
- General Safety Precautions, on page 450
- Guidelines to Achieving Optimal RF and Antenna Performance, on page 452
- Installation Notes, on page 455
- Communications, Services, and Additional Information, on page 456

Overview

This document describes the Cisco ANT-5G-MP-OUT-N omnidirectional antenna and provides details on radiation patterns, system requirements, and installation notes. The antenna is designed for IoT devices, Smart metering, and Utility boxes.

The following images show the antenna:

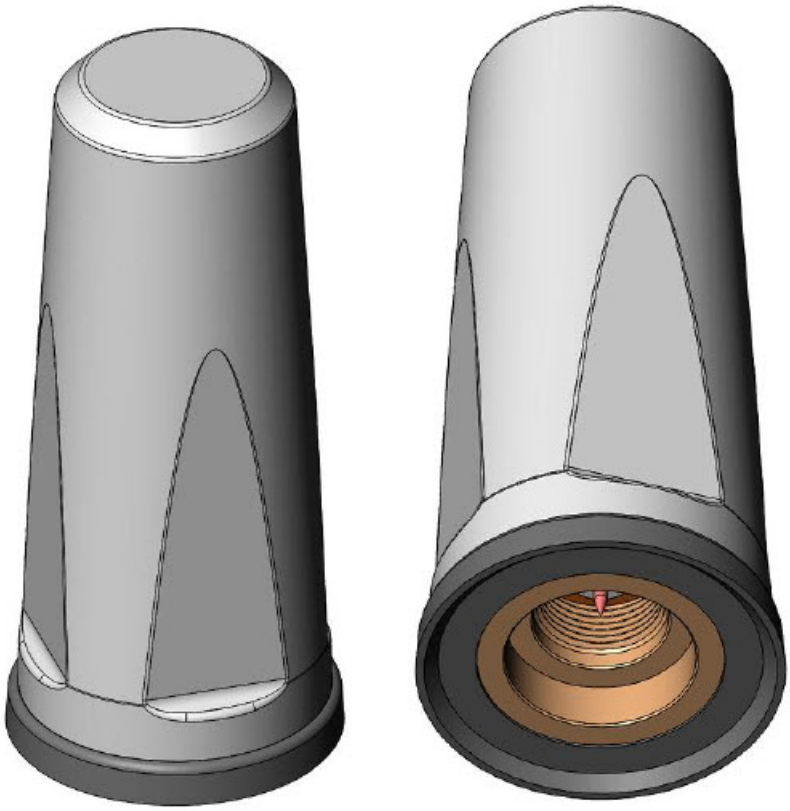

Technical Specifications

Antenna Type	Monopole
Operating Frequency Range	617-960 MHz 1710-5925 MHz
Nominal Impedance	50 Ohms
VSWR (617-960 MHz) VSWR (1710-5925 MHz)	3:1 2:1
Average peak gain (617-960 MHz) Average peak gain (1710-5925 MHz)	2 dBi 5.5 dBi
Average efficiency (617-960 MHz) (1710-5925 MHz)	83% 85%
Radiation Pattern	Omni

HPBW Vertical Plane (617-960 MHz) HPBW Vertical Plane (1710-5925 MHz)	65° 40°
Polarization	Vertical
Average Power Rating	10 W
ESD Protection	DC Grounded
Diameter	1.61” (40.9mm)
Height	3.77” (95.9mm)
Weight	.14lbs (63 g)
Connector	N-Male
Installation Torque	4-5 Ft/ lbs
Operational Temperature	-40° to +185°F (-40°C to +85°C)
Storage Temperature	-40° to +185°F (-40°C to +85°C)
Ingress Protection	IP66 and IP67
RoHS-6 Compliant	Yes

Radiation Patterns

The ANT-5G-MP-OUT-N radiation patterns are shown in the following three sections:

Frequency Plots

The ANT-5G-MP-OUT-N frequncy plots are shown in the following:

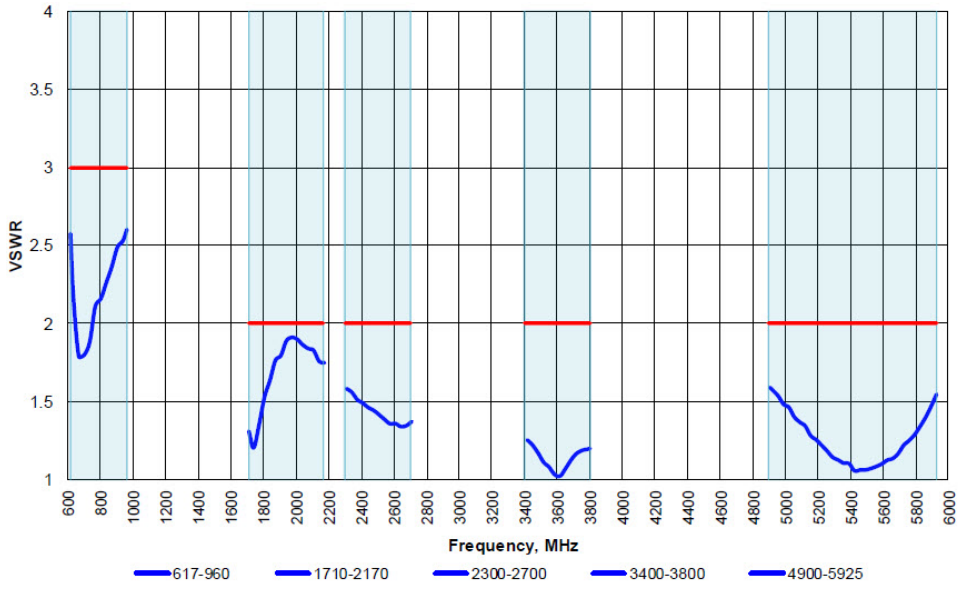
VSWR
4
3.5
3
2.5
2
1.5
1
600 800 1000 1200 1400 1600 1800 2000 2200 2400 2600 2800 3000 3200 3400 3600 3800 4000 4200 4400 4600 4800 5000 5200 5400 5600 5800 6000
Frequency, MHz
617-960
1710-2170
2300-2700
3400-3800
4900-5925

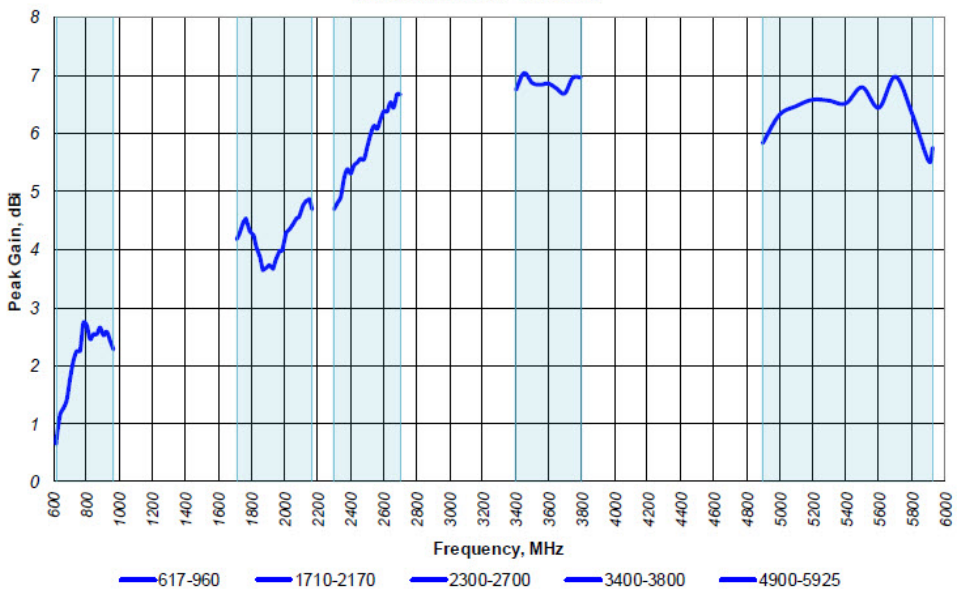
Peak Gain, dBi
8
7
6
5
4
3
2
1
0
600 800 1000 1200 1400 1600 1800 2000 2200 2400 2600 2800 3000 3200 3400 3600 3800 4000 4200 4400 4600 4800 5000 5200 5400 5600 5800 6000
Frequency, MHz
617-960
1710-2170
2300-2700
3400-3800
4900-5925

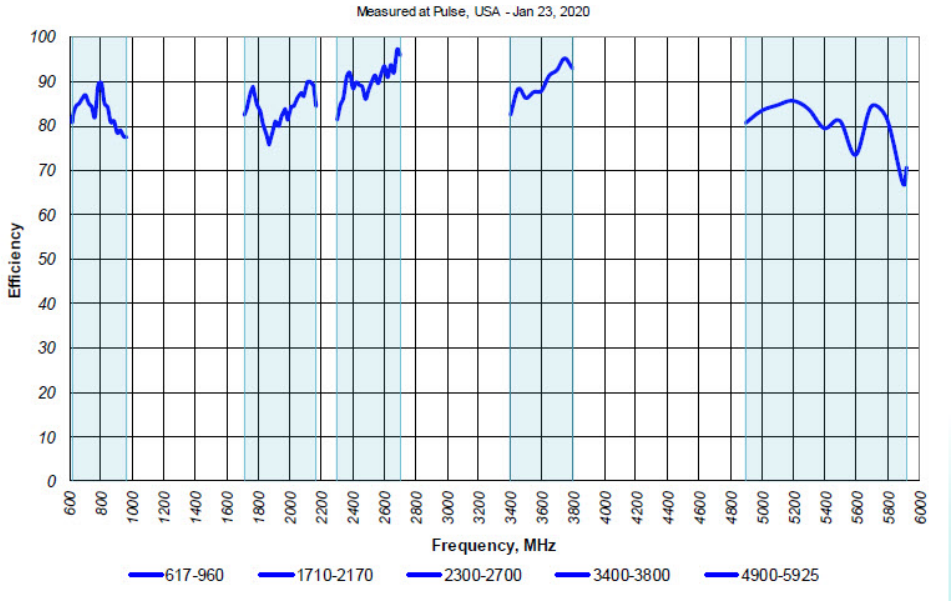

XY Plane Plots

The ANT-5G-MP-OUT-N XY Plane plots are shown in the following:

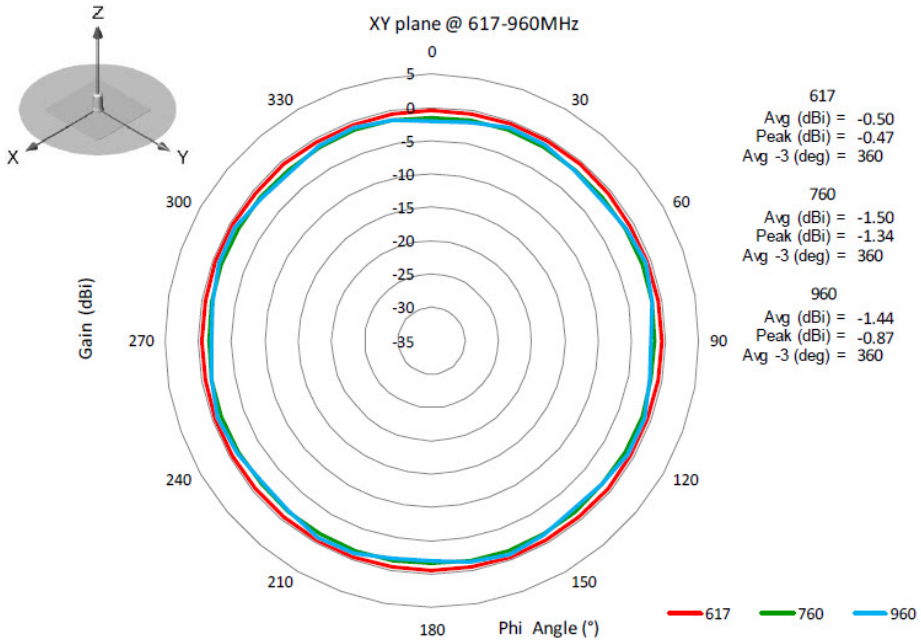
XY plane @ 617-960MHz
Z
X
Y
0
30
60
90
120
150
180
210
240
270
300
330
5
0
-5
-10
-15
-20
-25
-30
-35
Gain (dBi)
Phi Angle (°)
617
Avg (dBi) = -0.50
Peak (dBi) = -0.47
Avg -3 (deg) = 360
760
Avg (dBi) = -1.50
Peak (dBi) = -1.34
Avg -3 (deg) = 360
960
Avg (dBi) = -1.44
Peak (dBi) = -0.87
Avg -3 (deg) = 360
617
760
960

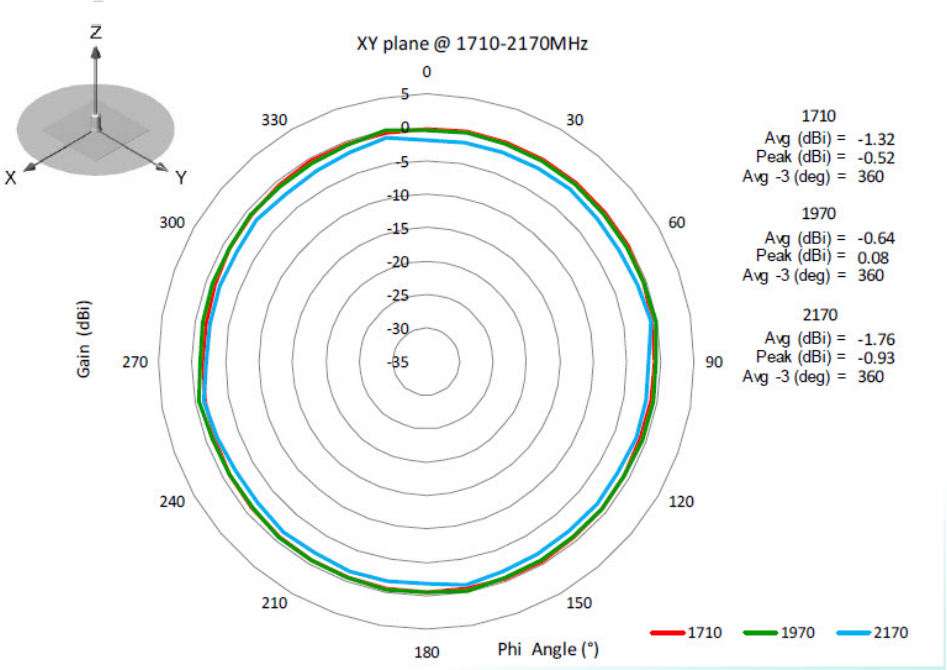
XY plane @ 1710-2170MHz
Z
X
Y
0
30
60
90
120
150
180
210
240
270
300
330
5
0
-5
-10
-15
-20
-25
-30
-35
Gain (dBi)
Phi Angle (°)
1710
Avg (dBi) = -1.32
Peak (dBi) = -0.52
Avg -3 (deg) = 360
1970
Avg (dBi) = -0.64
Peak (dBi) = 0.08
Avg -3 (deg) = 360
2170
Avg (dBi) = -1.76
Peak (dBi) = -0.93
Avg -3 (deg) = 360
1710
1970
2170

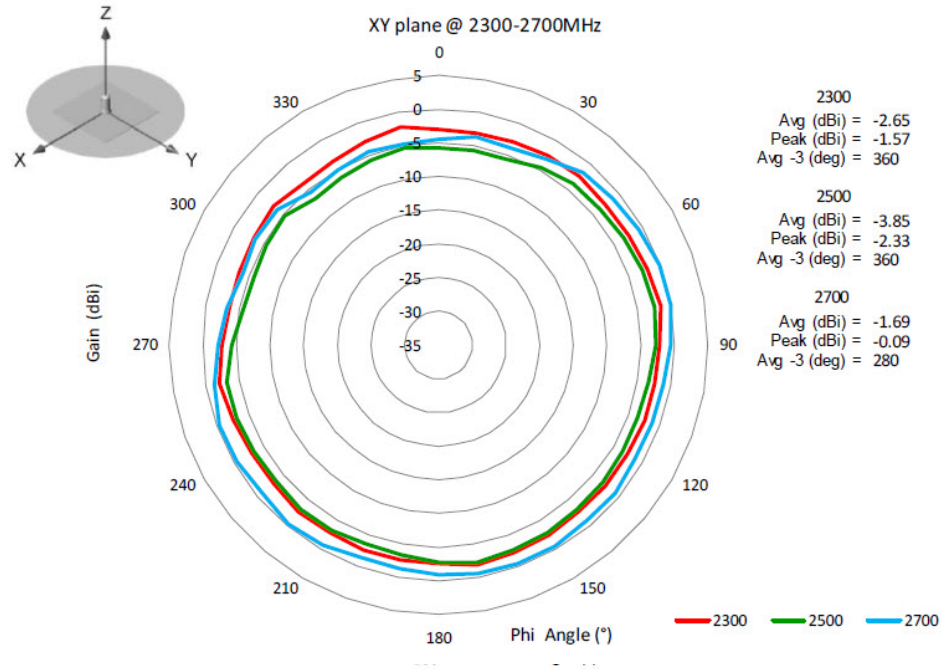
XY plane @ 2300-2700MHz
Z
X
Y
0
30
60
90
120
150
180
210
240
270
300
330
5
0
-5
-10
-15
-20
-25
-30
-35
Gain (dBi)
Phi Angle (°)
2300
Avg (dBi) = -2.65
Peak (dBi) = -1.57
Avg -3 (deg) = 360
2500
Avg (dBi) = -3.85
Peak (dBi) = -2.33
Avg -3 (deg) = 360
2700
Avg (dBi) = -1.69
Peak (dBi) = -0.09
Avg -3 (deg) = 280
2300
2500
2700

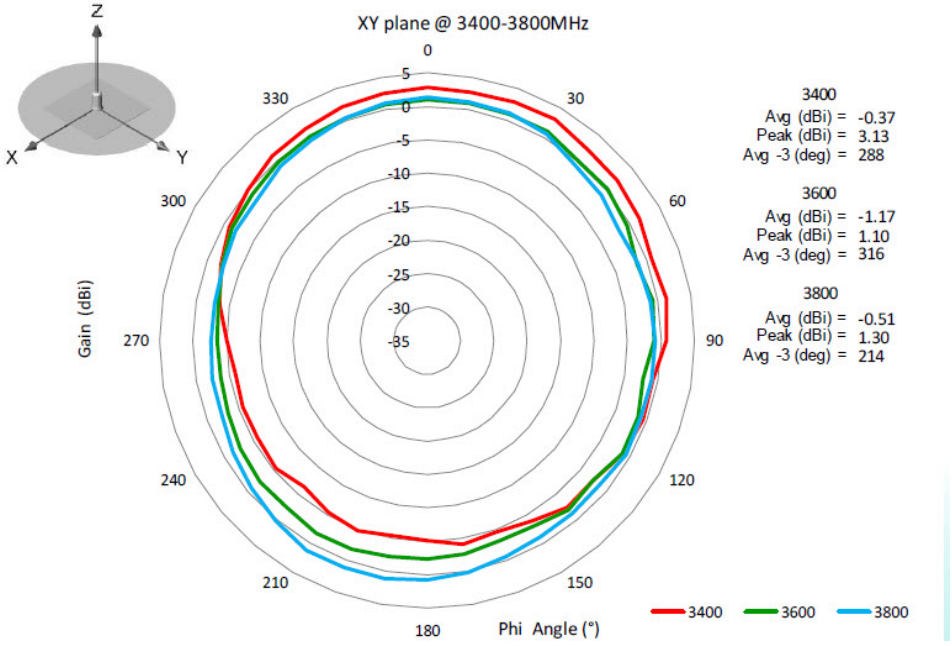
XY plane @ 3400-3800MHz
Z
X
Y
0
30
60
90
120
150
180
210
240
270
300
330
5
0
-5
-10
-15
-20
-25
-30
-35
Gain (dBi)
Phi Angle (°)
3400
Avg (dBi) = -0.37
Peak (dBi) = 3.13
Avg -3 (deg) = 288
3600
Avg (dBi) = -1.17
Peak (dBi) = 1.10
Avg -3 (deg) = 316
3800
Avg (dBi) = -0.51
Peak (dBi) = 1.30
Avg -3 (deg) = 214
3400
3600
3800

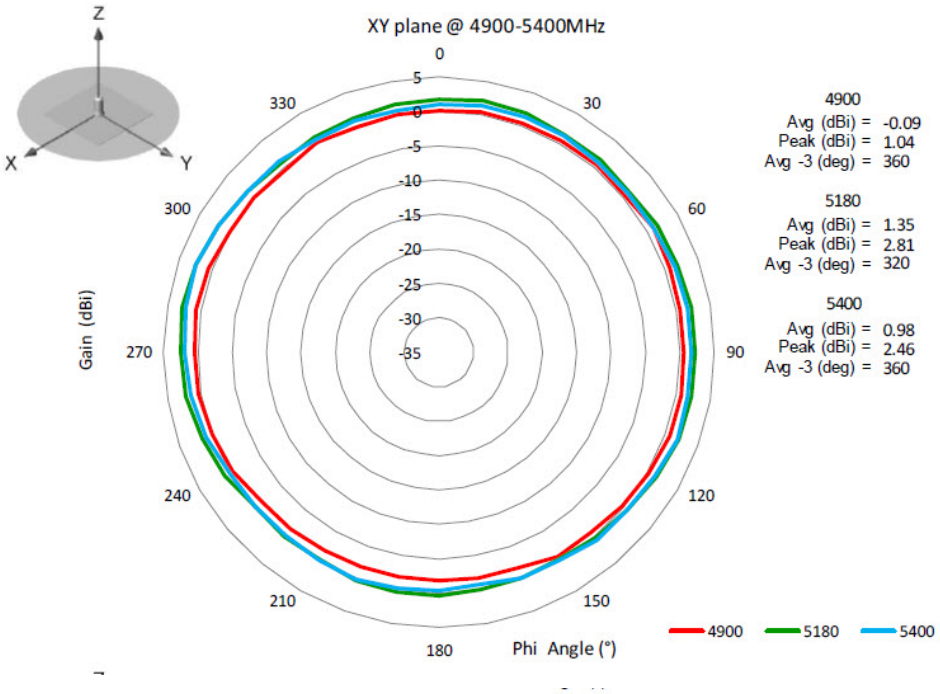

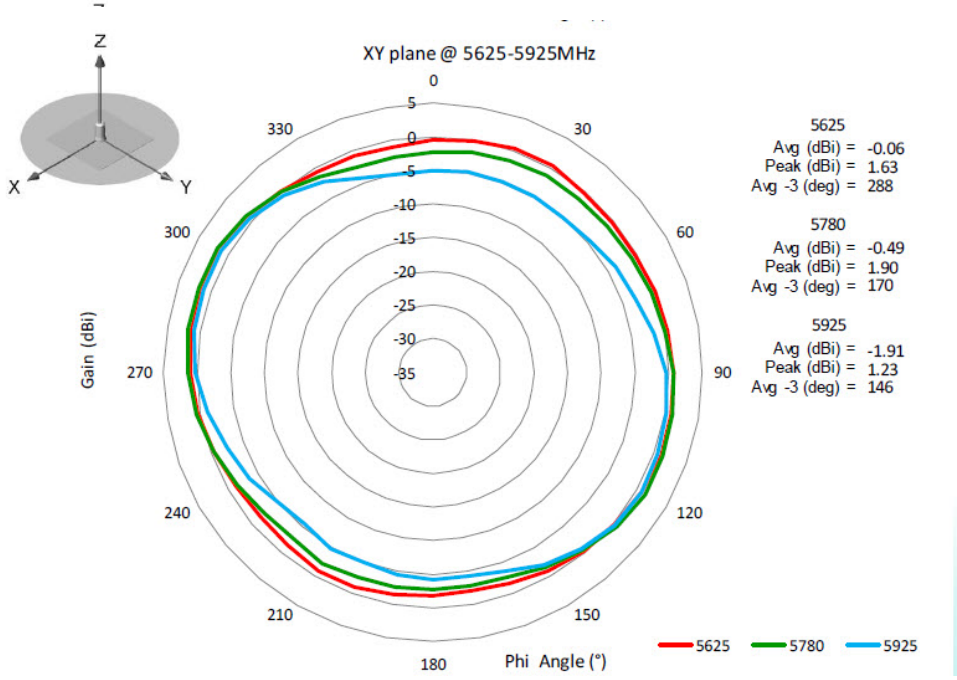

XZ Plane Plots

The ANT-5G-MP-OUT-N XZ Plane plots are shown in the following:

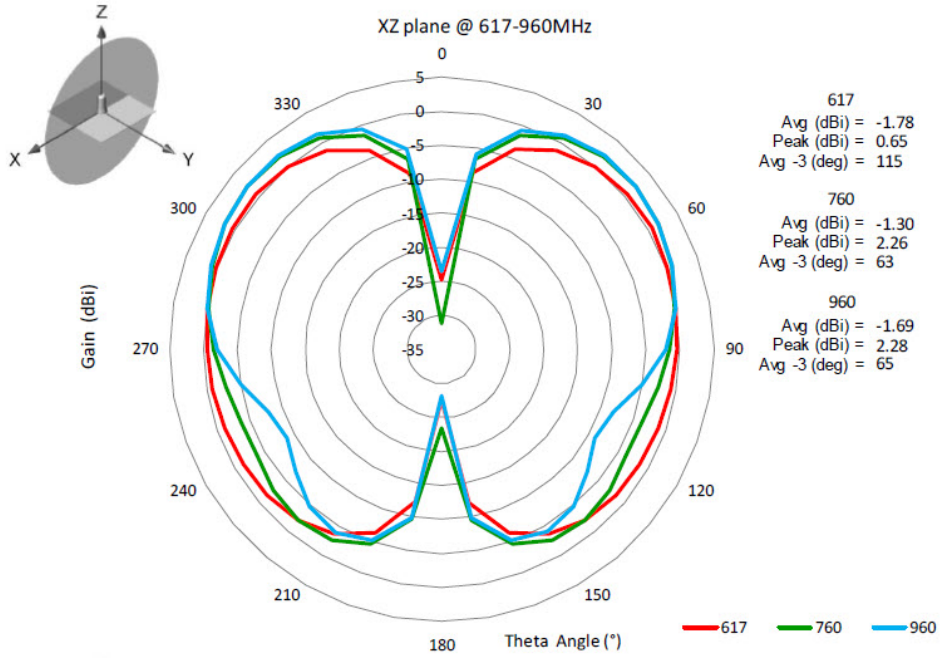
XZ plane @ 617-960MHz
Z
X
Y
0
30
60
90
120
150
180
210
240
270
300
330
5
0
-5
-10
-15
-20
-25
-30
-35
Gain (dBi)
Theta Angle (°)
617
Avg (dBi) = -1.78
Peak (dBi) = 0.65
Avg -3 (deg) = 115
760
Avg (dBi) = -1.30
Peak (dBi) = 2.26
Avg -3 (deg) = 63
960
Avg (dBi) = -1.69
Peak (dBi) = 2.28
Avg -3 (deg) = 65
617
760
960

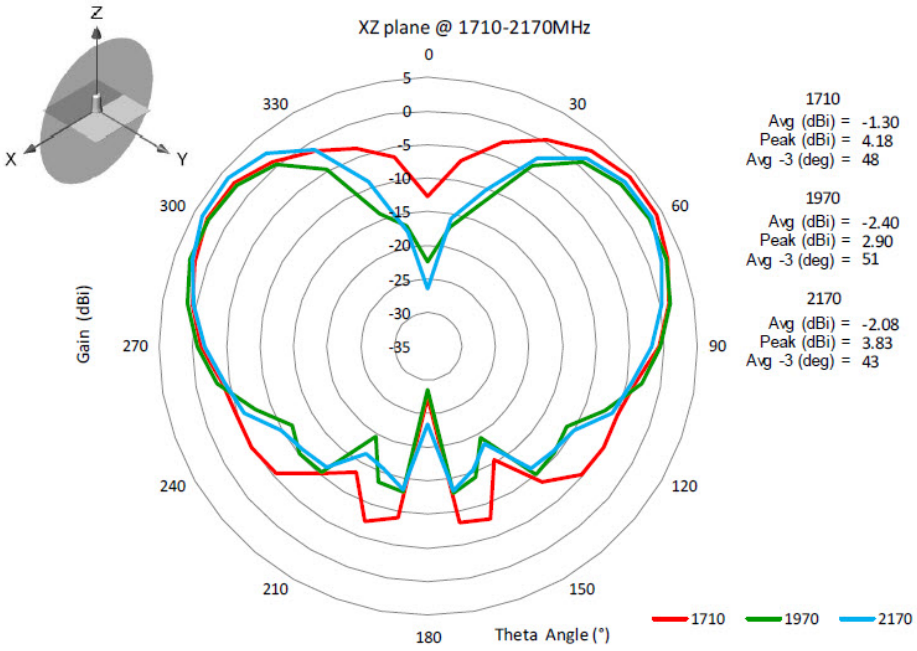
XZ plane @ 1710-2170MHz
Z
X
Y
0
30
60
90
120
150
180
210
240
270
300
330
5
0
-5
-10
-15
-20
-25
-30
-35
Gain (dBi)
Theta Angle (°)
1710
Avg (dBi) = -1.30
Peak (dBi) = 4.18
Avg -3 (deg) = 48
1970
Avg (dBi) = -2.40
Peak (dBi) = 2.90
Avg -3 (deg) = 51
2170
Avg (dBi) = -2.08
Peak (dBi) = 3.83
Avg -3 (deg) = 43
1710
1970
2170

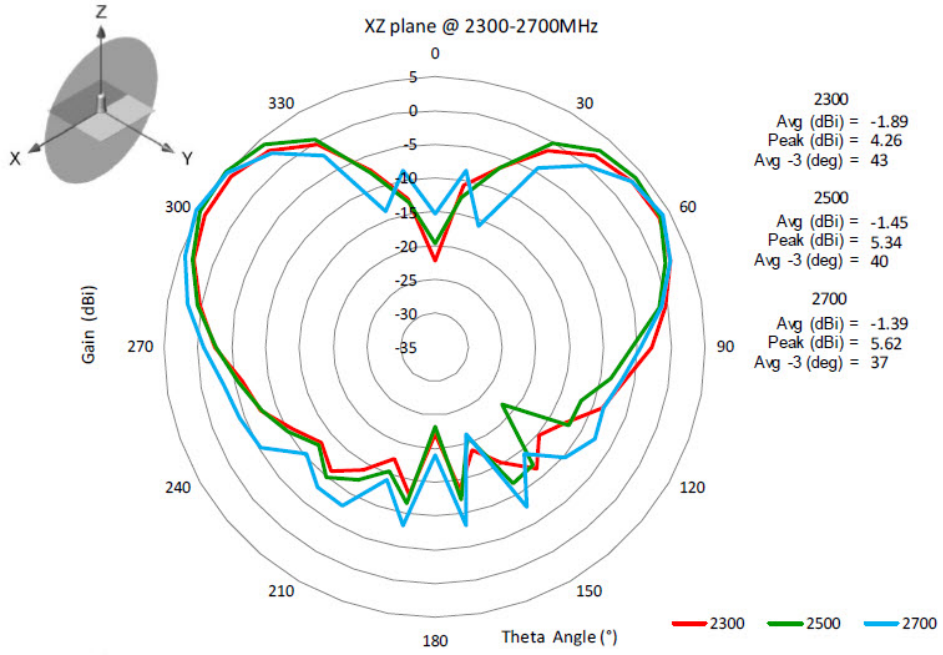
XZ plane @ 2300-2700MHz
Z
X
Y
0
30
60
90
120
150
180
210
240
270
300
330
5
0
-5
-10
-15
-20
-25
-30
-35
Gain (dBi)
Theta Angle (°)
2300
Avg (dBi) = -1.89
Peak (dBi) = 4.26
Avg -3 (deg) = 43
2500
Avg (dBi) = -1.45
Peak (dBi) = 5.34
Avg -3 (deg) = 40
2700
Avg (dBi) = -1.39
Peak (dBi) = 5.62
Avg -3 (deg) = 37
2300
2500
2700

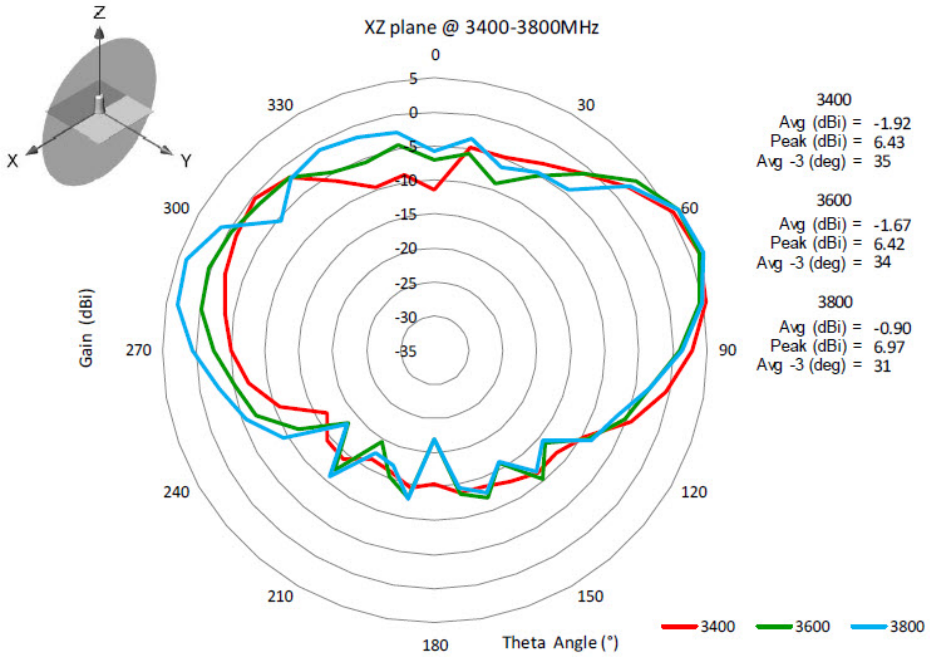
XZ plane @ 3400-3800MHz
Z
X
Y
0
30
60
90
120
150
180
210
240
270
300
330
5
0
-5
-10
-15
-20
-25
-30
-35
Gain (dBi)
Theta Angle (°)
3400
Avg (dBi) = -1.92
Peak (dBi) = 6.43
Avg -3 (deg) = 35
3600
Avg (dBi) = -1.67
Peak (dBi) = 6.42
Avg -3 (deg) = 34
3800
Avg (dBi) = -0.90
Peak (dBi) = 6.97
Avg -3 (deg) = 31
3400
3600
3800

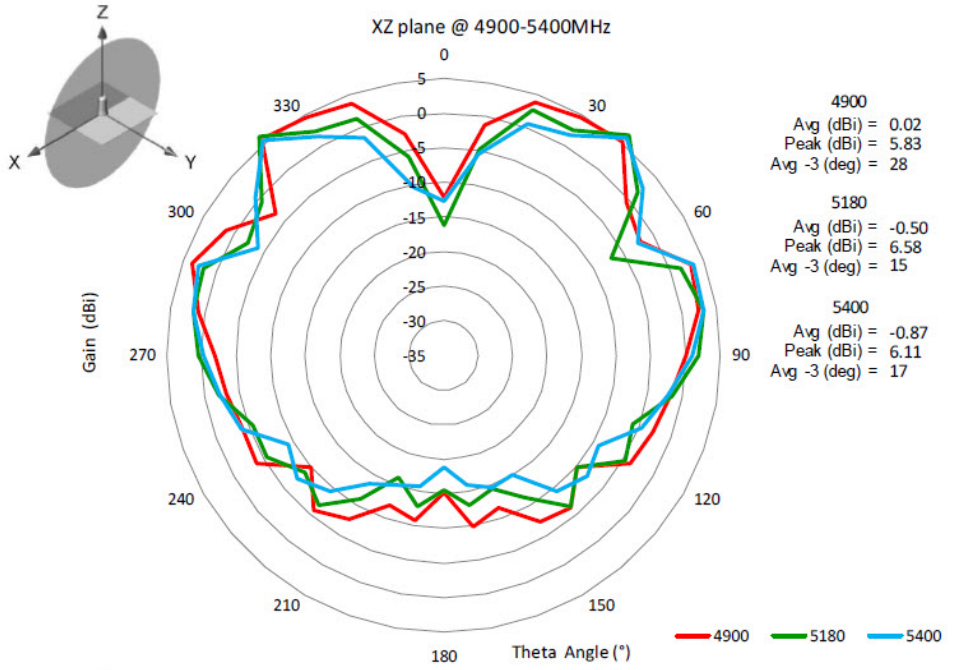

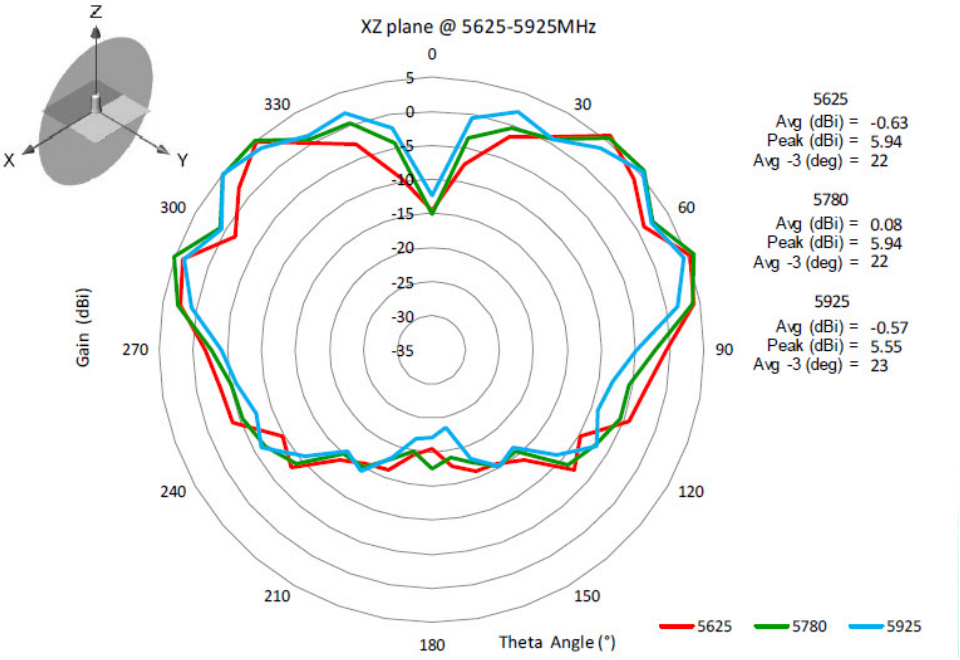

Mechanical Drawing

The ANT-5G-MP-OUT-N mechanical dimensions are shown in the following graphic:

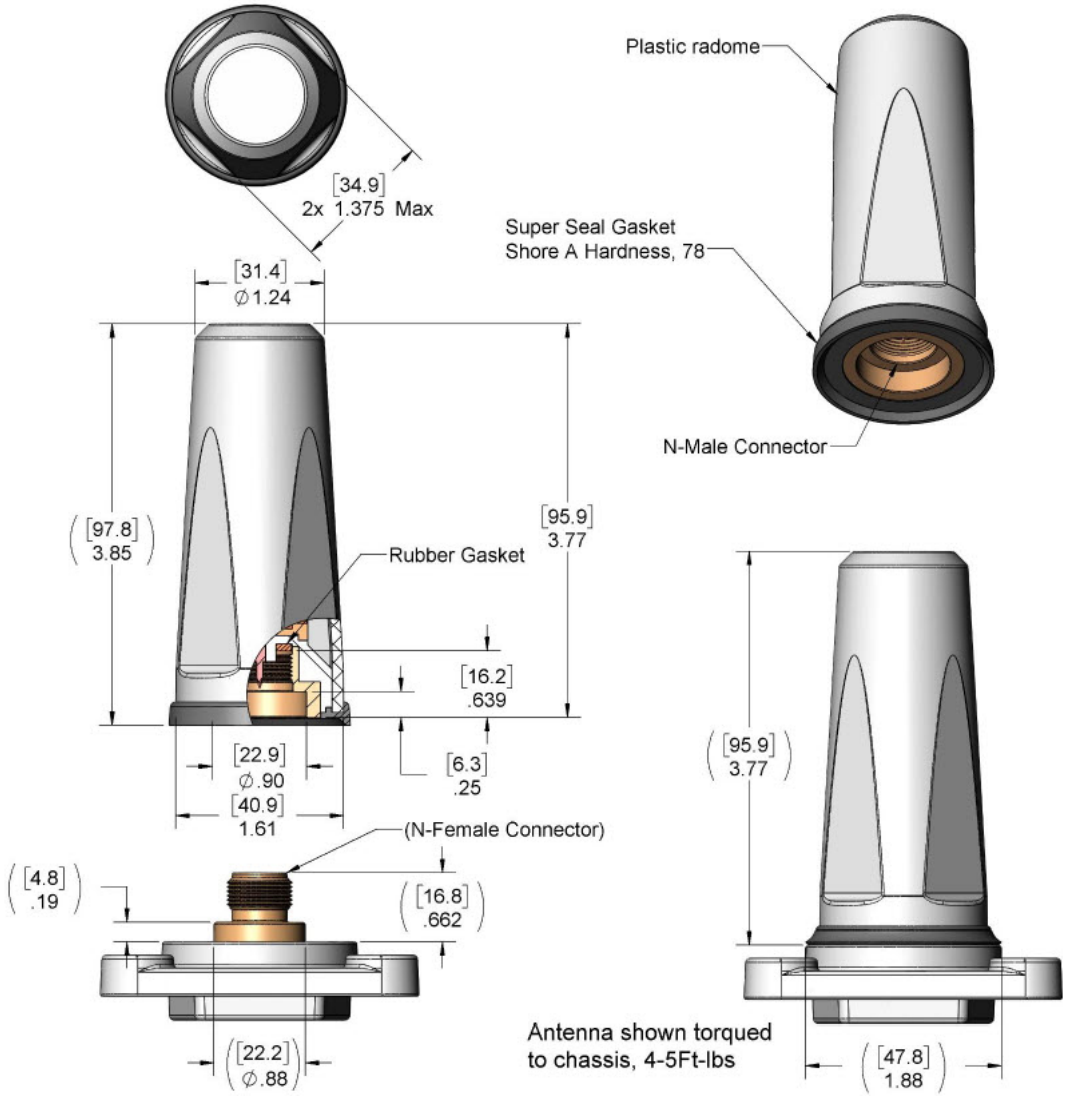

System Requirements

This antenna is designed for use with the Cisco Connected Grid Routers.

General Safety Precautions

Warning This warning symbol means danger. You are in a situation that could cause bodily injury. Before you work on any equipment, be aware of the hazards involved with electrical circuitry and be familiar with standard practices for preventing accidents. Use the statement number provided at the end of each warning to locate its translation in the translated safety warnings that accompanied this device. **Statement 1071**

Warning Do not work on the system or connect or disconnect cables during periods of lightning activity. **Statement 1001**

Warning Do not locate the outdoor antenna near overhead power lines or other electric light or power circuits, or where it can come into contact with such circuits. When installing the antenna, take extreme care not to come into contact with such circuits, as they may cause serious injury or death. For proper installation and grounding of the antenna, please refer to national and local codes (for example, U.S.:NFPA 70, National Electrical Code, Article 810, Canada:Canadian Electrical Code, Section 54). **Statement 1052**

Warning In order to comply with FCC radio frequency (RF) exposure limits, antennas should be located at a minimum of 7.9 inches (20 cm) or more from the body of all persons. **Statement 332**

Note For your safety, and to help you achieve a good installation, please read and follow these safety precautions.

Mast Mounted or Building Mounted Installations

The following instructions are common to most mast mounted or building mounted installations. For specific installation instructions for each antenna, see the antenna data-sheet and the router hardware installation guide.

- Find someone to help you—installing an antenna is often a two-person job.
- Select your installation site with safety, as well as performance, in mind. Remember that electric power lines and phone lines look alike. For your safety, assume that any overhead line can kill you.
- Contact your electric power company. Tell them your plans and ask them to come look at your proposed installation.
- Do not use a metal ladder.
- Do not work on a wet or windy day.
- Do dress properly—wear shoes with rubber soles and heels, rubber gloves, and a long-sleeved shirt or jacket.
- If the assembly starts to drop, move away from it and let it fall. Because the antenna, mast, cable, and metal guy wires are all excellent conductors of electrical current, even the slightest touch of any of these parts to a power line completes an electrical path through the antenna and the installer.
- If any part of the antenna system should come in contact with a power line, do not touch it or try to remove it yourself. Call your local power company to have it removed safely.
- If an accident should occur with the power lines, call for qualified emergency help immediately.
- Assemble your new antenna on the ground or a level surface at the installation site.
- Connect its coaxial cable while you are on the ground and attach the antenna to the mast.

- Ensure that the mast does not fall as you raise or remove it. Use a durable non-conductive rope secured at each two foot level as the mast is raised. Have an assistant tend the rope, ready to pull the mast clear of any hazards (such as power lines) should it begin to fall.
- Use the mounting bracket provided with the antenna.
- If the installation will use guy wires:
  - Install guy anchor bolts.
  - Estimate the length of guy wire and cut it before raising the mast.
  - Attach guy wires to a mast using guy rings.
  - In the case of a guyed (tall, thin mast) installation, you must have at least one assistant to hold the mast upright while the guy wires are attached and tightened to the anchor bolts.
- Attach a “DANGER” label at eye level on the mast.
- Install ground rods to remove any static electricity buildup and connect a ground wire to the mast and ground rod. Use ground rods designed for that purpose, not a spare piece of pipe.

Unused Antenna Ports

Port plugs must be installed in any unused antenna ports.

The weatherproof caps on the connectors protect the router interior from environmental elements including water, heat, cold, and dust. They are installed on unused ports before the router is shipped.

When you install a new antenna in a port with an N-connector:

- Chassis-mounted antennas—Remove the weather proof cap before installing a chassis-mounted antenna.
- External antennas—Remove weatherproof cap, then connect the supported Cisco cable to the connector.

Guidelines to Achieving Optimal RF and Antenna Performance

Antennas are a critical component of a wireless communication system. Selecting a suitable antenna, an optimal antenna location, or antenna site is essential for optimum performance of a wireless links.

This section covers general tips for optimizing RF performance of indoor and outdoor terrestrial radio systems in the 400-7125 MHz frequency range. Examples of terrestrial radio systems include 4G LTE, 5G NR, Wi-Fi, LoRa, LR-WPAN and similar. In this context GPS SPS would not be considered a terrestrial system as the signal is received from space, not from another terrestrial site.

Because the antenna transmits and receives radio signals over the air, overall RF performance of the link is susceptible to RF obstructions and common sources of RF interference that can reduce throughput and range of the system.

Follow these guidelines to optimize performance. When in doubt, consult a qualified RF professional, and check with your solution partner for specific recommendations.

Antenna Model Selection and Performance

Consider the following when planning your installation:

- When selecting the antenna, ensure that it covers the frequency ranges or frequency bands of interest, and that it has good RF parameters such as antenna efficiency, VSWR and suitable radiation pattern for every frequency range that your application will use with this antenna.
- Antenna pattern is important. Omni-directional antennas have lower gain, but allow communicating to devices in all azimuth directions. Directional antennas concentrate the beam in a specific direction, making them ideal for point to point communication.
- When a system has multiple RF ports for receive and / or transmit, as is the case for 4G LTE , 5G NR or Wi-Fi, it is highly recommended to populate all the RF ports with suitable antennas to take advantage of MIMO, rather than rely on a single port or single antenna to save on cost. Please see the MIMO section for a detailed description of MIMO benefits.
- For RF systems that support multiple RF ports and multiple RF standards such as LTE, Wi-Fi, and GPS: consider using a multi-element antenna that integrates multiple antennas under the same radome (cover). Doing so may reduce cost compared to deploying and mounting a discrete single port antenna for every RF port.
- For communication between fixed infrastructure devices, such as mesh nodes or a point-to-point backhaul link, each device should have an antenna with the same polarization. If communicating with mobile devices that might be randomly oriented, consider dual-polarized antennas, such as those with both vertical and horizontal or slant +45° and -45° polarized elements.

Antenna Environmental Specifications

The selected antenna must have suitable mechanical and environmental specifications for the environment where it will be deployed. For example, shock and vibration specifications for transportation, corrosion resistant construction for marine and oil and gas industries, or IP (ingress protection) rating for outdoor deployment. Indoor antennas are typically not suitable for harsh industrial environments. Please check with your system integrator for environmental requirements for your application.

Antenna Accessories and Mounting

Consider the following when planning your installation:

- Carefully consider what type of other RF accessories, besides antenna, such as RF cables, lightning arrestors or RF adapters may be required in your installations. It is best to minimize long RF cable runs due to RF signal losses in the cable. Thinner RF cables have more RF loss , thicker cables are less flexible and more expensive.
- Carefully consider how the antenna will be physically mounted, as this may affect antenna selection. For example, a stud mount mechanical mounting design is a better fit for mounting on top of an electrical cabinet than a mast mount antenna.
- For outdoor deployments, follow installation instructions for the antenna. It is good practice to keep protective covers on the radio’s RF ports and any antenna or accessory RF ports until the moment the interfaces are mated. This reduces chances of contamination, trapping water or condensation inside the connector, or accidental damage to RF interfaces.

MIMO Performance and Arrays

MIMO systems deliver benefits of higher SNR, higher reliability and higher throughput compared to single antenna systems. In more technical terms, MIMO delivers array gain, diversity gain and multiplexing gain compared to single antenna.

- Array gain — Improvement in SNR (signal to noise ratio) by coherently combining signals from multiple antennas. For example, increasing SNR through beamforming techniques.
- Diversity gain — Improvement in reliability by mitigating deep fading or strong destructive EM wave interference. For example, in a two-antenna system, if one antenna is experiencing deep fading due to an EM destructive null at its location at a given instant, the other antenna is unlikely to have a null at the same instant, and the combined SNR stays at a reliable level. In contrast, a single antenna would see SNR oscillating between good SNR and very poor SNR and reliability would degrade.
- Multiplexing gain — Increase in system capacity or throughput by sending independent data over multiple spatial streams simultaneously. The number of streams cannot be more than the number of antennas. For example, to support three spatial streams, a minimum of three antennas is required. Often there may be additional antennas for diversity or redundancy, such as in the case of 4x4:3, or 4x4 MIMO with 3 spatial streams.

If deploying multiple single-element antennas for a MIMO system in an array, ensure sufficient spacing between the antennas. Omnidirectional elements should generally be at least one wavelength apart at the lowest operating frequency.

Consider the following:

- For Wi-Fi systems operating in the 2.4, 5, and/or 6 GHz bands, space elements at least 5 inches (12.5 cm) apart.
- For 4G LTE and 5G systems with the lowest operating frequency of 617 MHz , space elements at least 20 inches (50 cm) apart.
- Note that spacing between elements inside multi-element MIMO antennas is often less than one wavelength. However multi-element antennas are engineered with MIMO performance in mind, by providing antenna diversity through pattern, polarization, and isolation between MIMO elements.

Antenna siting and location

Consider the following when planning your installation:

- Plan antenna location ahead of time. Ideal location for an antenna is in LOS (line of sight) of the counterpart that it is trying to communicate with. Under LOS conditions the signals propagate directly between the two communication nodes, without relying on signal bouncing off a wall or other structure to reach the counterpart. This is sometimes not possible to achieve in practice, but it is a useful goal to keep in mind when optimizing antenna location.
- While it is good to keep RF cables short, it is most desirable for an antenna to be in the best location it can be to provide the desired coverage.
- For large deployments involving multiple units communicating with each other across a complex urban or industrial landscape, consider running an RF propagation modeling study to predict approximate simulated coverage maps and determine initial placement of the units. A propagation study may help reduce overall deployment cost by discovering and mitigating issues with RF coverage before the infrastructure is physically installed.
- Keep the antenna away from metal obstructions such as heating and air-conditioning ducts, large ceiling trusses, building superstructures, and major power cabling runs. One exception is if the antenna is designed to be mounted on a ground plane. If mounting on a ground plane, mount the antenna on a flat metal surface away from adjacent obstructions.

- It is strongly recommended not to install antennas directly on the router or access point (AP), unless the router or AP is specifically engineered to directly mount the antennas. Products that are engineered for direct mounting of antennas specifically address each of the below issues.
- Reasons to mount antennas away from the router include:
  - Router location may not be optimal location for antenna to communicate with the counterpart wirelessly, so router and antenna may need to be in different locations.
  - Router may have a clutter of Ethernet cable and power cables around it, which will obstruct antenna signal.
  - A number of routers, such as the IR1835, are modular. They have plug-in RF modules for Wi-Fi , 4G LTE or 5G NR such as WP-WIFI6, P-LTEAP18-GL, P-5GS6-GL. These modules have RF connectors spaced close together, and while it is mechanically possible to install four or five antennas directly attached, this will result in significant degradation to RF performance of antennas due to mutual de-tuning between closely spaced antennas. It is strongly recommended to install antennas away from the chassis in modular cases.
- If installing an antenna indoors, consider that the density and electromagnetic properties of the materials used in the building construction determines the number of walls the signal can pass through and still maintain adequate coverage.
  - Paper and vinyl walls have very little effect on signal penetration.
  - Solid and pre-cast concrete walls limit signal penetration to one or two walls without degrading coverage.
  - Concrete and wood block walls limit signal penetration to three or four walls.
  - A signal can penetrate five or six walls constructed of drywall or wood.
  - A thick metal wall causes signals to reflect off, causing poor penetration.
  - A chain link fence or wire mesh spaced between 1 and 1 1/2 in. (2.5 and 3.8 cm) acts as a harmonic reflector that blocks a 2.4-GHz radio signal.
  - Install the antenna away from microwave ovens and 2-GHz cordless phones. These products can cause signal interference because they operate in the same frequency range as the device your antenna is connected to.

Installation Notes

The antenna is designed to connect to a dedicated antenna port on the device. No special tools are required to install the antenna.

The antenna is resistant to the full range of outdoor environments. After the antenna is attached to the access point, seal the connections to prevent moisture and other weathering elements from affecting performance. Cisco recommends using a coax seal (such as CoaxSeal) for outdoor connections. Silicone sealant or electrical tape are not recommended for sealing outdoor connections.

Tools and Equipment Required

No tools are required to mount the antenna to the device. However, you may need a ¾-in. (19-mm) open end or combination wrench (or adjustable wrench) to remove the antenna port covers.

For information about tools required to mount the access point, see the appropriate device documentation.

Mounting the Antenna

Refer to Mechanical Drawing, on page 449 for assistance.

To connect the antenna to the access point, follow these steps:

1. If necessary, remove the antenna port cover.
2. Align the antenna's N-Male connector with the appropriate antenna port on the device.
3. Gently push the antenna into the port.
4. Hand-tighten the antenna.

Communications, Services, and Additional Information

- To receive timely, relevant information from Cisco, sign up at Cisco Profile Manager.
- To get the business impact you're looking for with the technologies that matter, visit Cisco Services.
- To submit a service request, visit Cisco Support.
- To discover and browse secure, validated enterprise-class apps, products, solutions, and services, visit Cisco DevNet.
- To obtain general networking, training, and certification titles, visit Cisco Press.
- To find warranty information for a specific product or product family, access Cisco Warranty Finder.

Cisco Bug Search Tool

Cisco Bug Search Tool (BST) is a web-based tool that acts as a gateway to the Cisco bug tracking system that maintains a comprehensive list of defects and vulnerabilities in Cisco products and software. BST provides you with detailed defect information about your products and software.

Documentation Feedback

To provide feedback about Cisco technical documentation, use the feedback form available in the right pane of every online document.

Cisco Support Community

Cisco Support Community is a forum for you to ask and answer questions, share suggestions, and collaborate with your peers. Join the forum at https://supportforums.cisco.com/index.jspa.

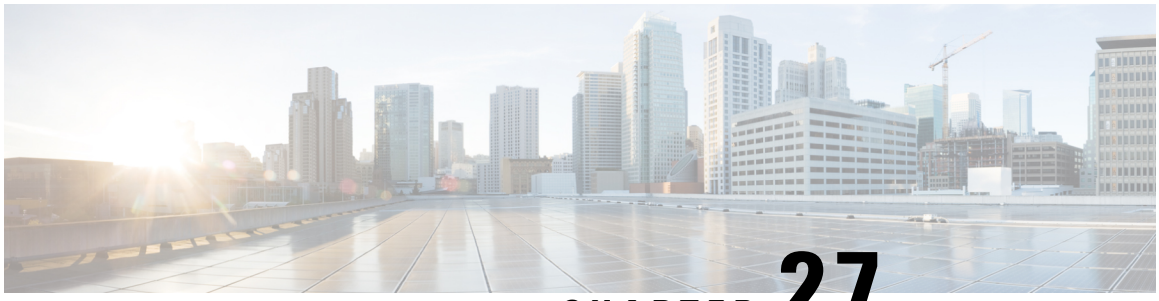

CHAPTER 27

Cisco 4-in-1 Fixed Infrastructure Antenna w/bracket (ANT-4-5G4-O)

This section contains the following:

- Overview, on page 457
- Technical Specifications, on page 459
- Antenna Assembly, on page 460
- Standalone Antenna Performance, on page 461
- Radiation Patterns, on page 463
- General Safety Precautions, on page 465
- Guidelines to Achieving Optimal RF and Antenna Performance, on page 466
- Installing the Antenna, on page 470
- Communications, Services, and Additional Information, on page 471

Overview

This section describes the Cisco 4-in-1 Fixed Infrastructure Antenna w/bracket (ANT-4-5G4-O) , from this point on referred to as "The Antenna".

The following graphic shows the antenna:

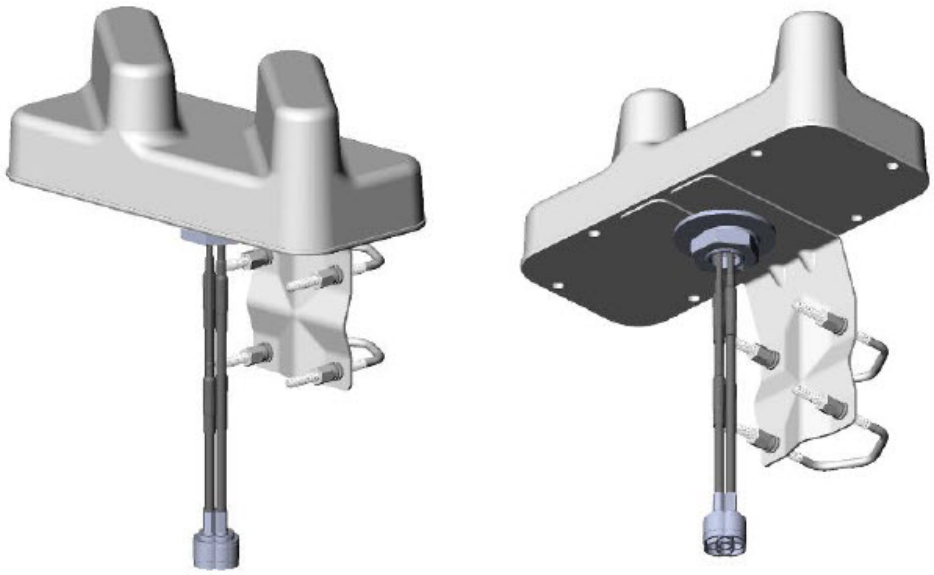

Features and Applications

The Antenna offers the following:

- 4x 617-960/1710-5925MHz
- 5G FR1, Dual Band WiFi Support
- Includes Band 71 (617- 698 MHz)
- Omni radiation pattern
- Average peak gain
    - 617-960 MHz = 1.5dBi
    - 1710-5925 MHz = 2dBi
- Average power rating = 45W
- Size: L=10.65” x W=4.67” x H=3.46” (270.4 x 118.6 x 88.0mm)
- 4x 10ft Low loss cables with N-Male Connectors
- Bracket, mounts to Ø1”-2.12” (25.4-54mm) pole (720-hour salt spray rating)
- CBRS Bands 42 and 48 (3400-3700 MHz)
- Utility boxes, Smart metering, IoT Devices
- Fixed Infrastructure

Technical Specifications

The following lists the Electrical and Mechanical specifications:

Electrical Specifications

The Antenna Electrical specifications are listed in the following tables:

Item	Specification
Antenna Type **Note** (4) Multi-Band Monopoles with built in ground plane, independent from external ground plane	Monopole/GP
Nominal Impedance	50Ω
Polarization	Vertical
Radiation Pattern	Omni
Power Withstanding	45W
DC Ground	No

Frequency (MHz)	617-960	1710-2170	2300-2700	3400-3800	4900-5925
VSWR	2.5:1	2:1	2:1	2:1	2.5:1
Average Peak Gain (dBi)	0.8	2.0	3.7	2.8	1.0
Average Efficiency (%)	54	54	54	33	27
Isolation (LTE 1-2 / LTE 3-4)	8	17	26	21	22
Isolation (LTE 1-3 / LTE 2-4)	15	24	28	30	32
Isolation (LTE 1-4)	15	35	37	34	36
HPBW Vertical Plane (°)	85	65	46	50	45

Note In the three Isolation rows above, the values are Minimum Isolation (dB).

Mechanical Specifications

The Antenna Mechanical specifications are listed in the following table:

Item	Specification
Size	L=10.65” x W=4.67” x H=3.46” (270.4 x 118.6 x 88.0mm)
Color	Gray
Weight	1.75kgs (3.85lbs)
Connector Type	N-Male
Fixing System	Direct Mount **Note** Mounting configuration (off bracket), Ø1.063” (27.0mm) hole required.
Housing Material	PET+PC, UV rated
Operating Temperature	-40°C to +85°C
Storage Temperature	-40°C to +85°C
Ingress Protection	IP67
RoHS-6 Compliant	Yes

Antenna Assembly

The following two graphics show the details of the antenna assembly:

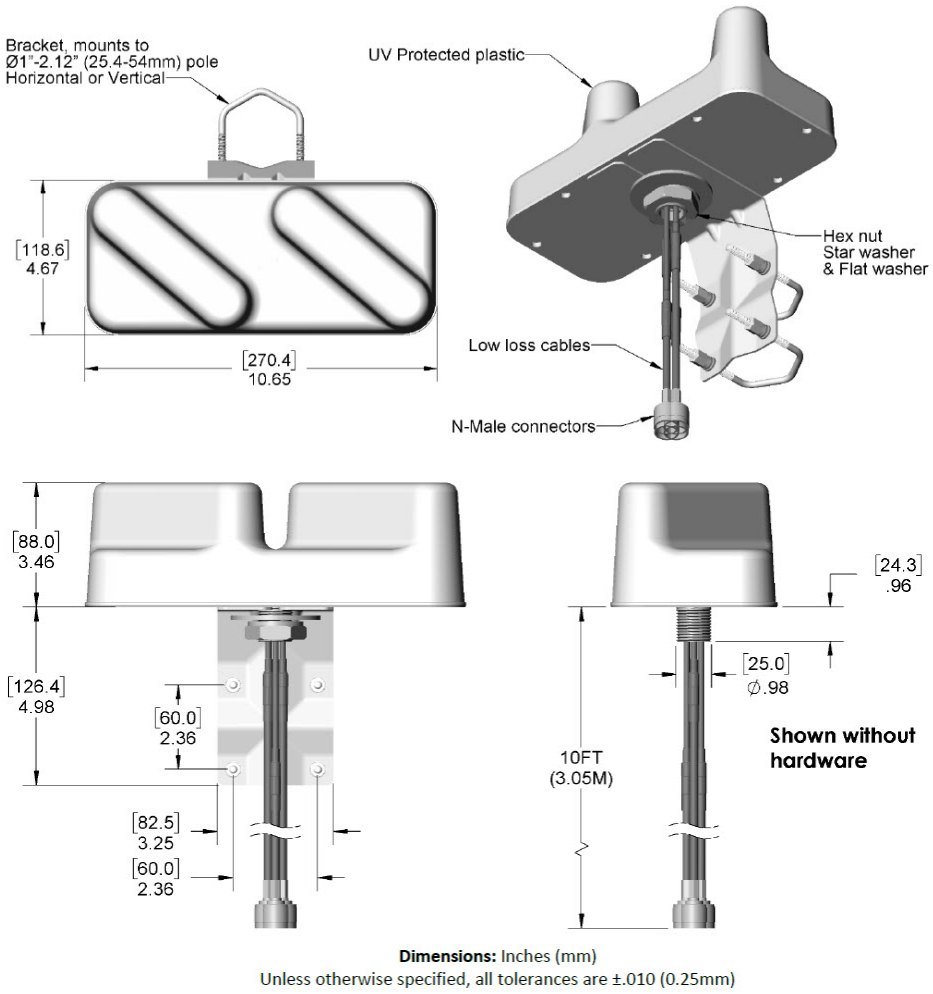

Standalone Antenna Performance

See the following graphics for details:

LTE Identifiers

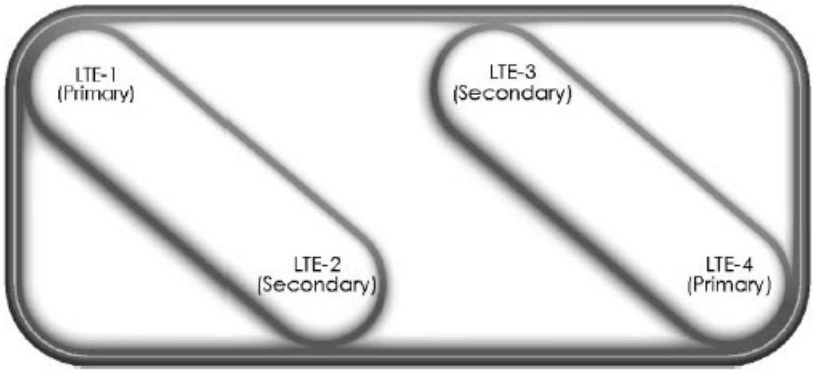

VSWR Vs Frequency

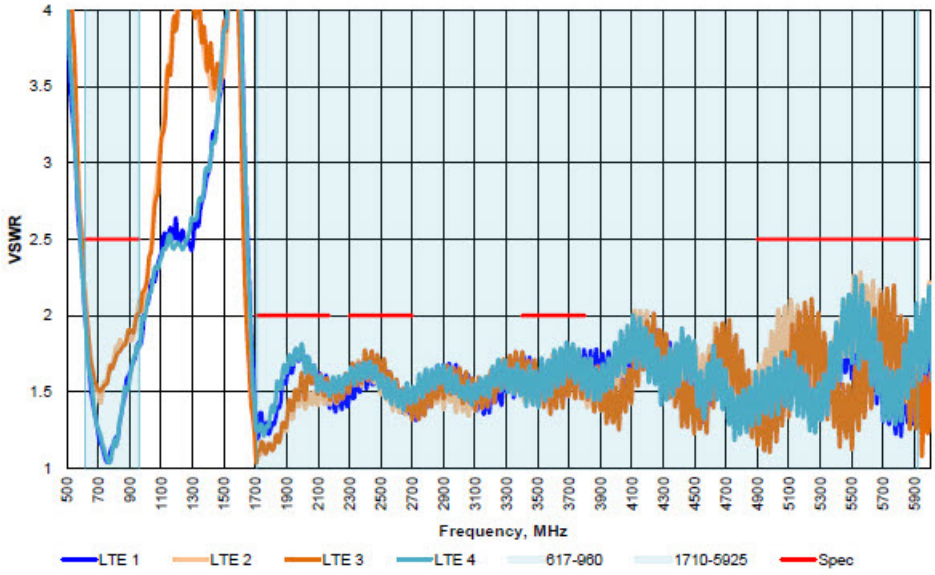

Peak Gain Vs Frequency

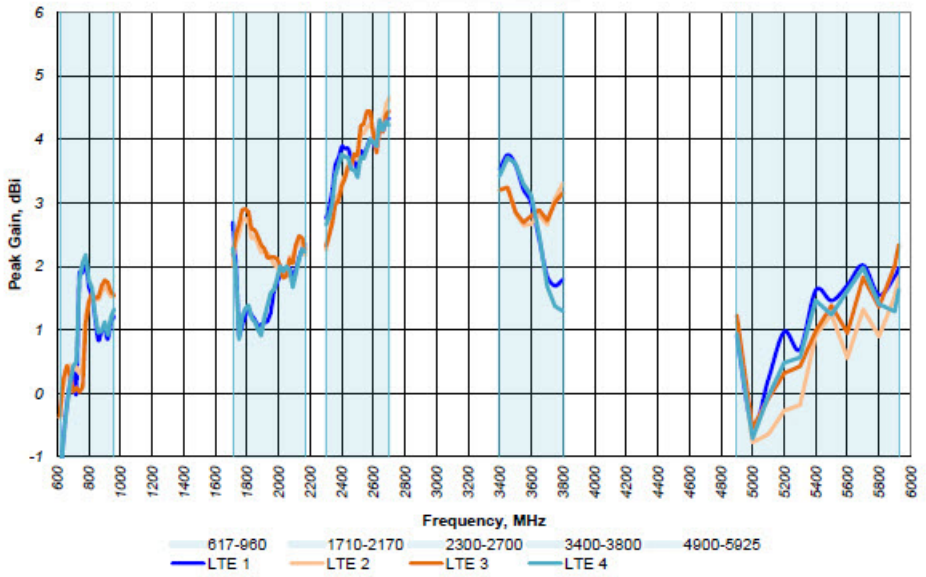

Efficiency Vs Frequency

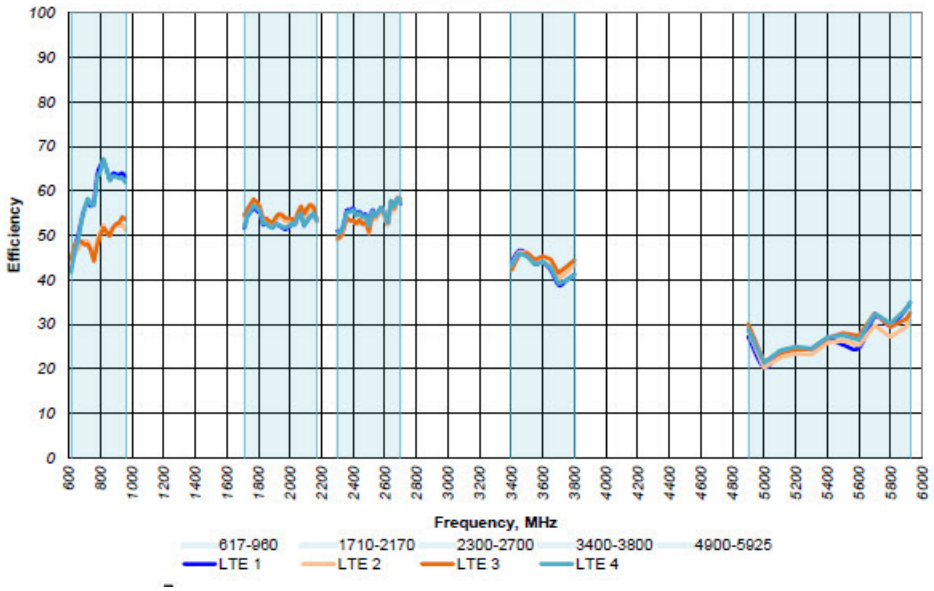

Radiation Patterns

See the following graphics for details:

XY Plane

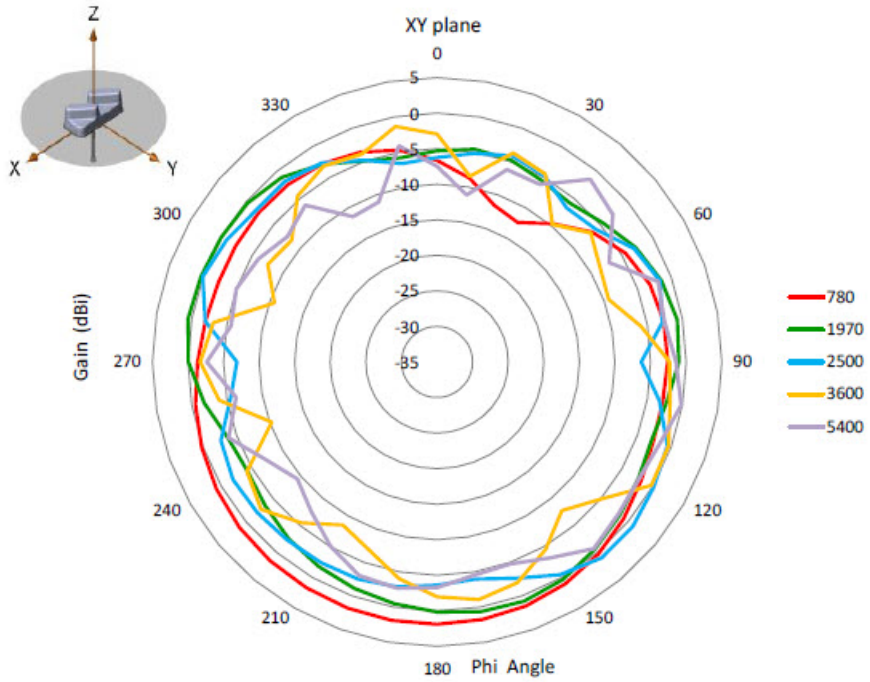

XZ Plane

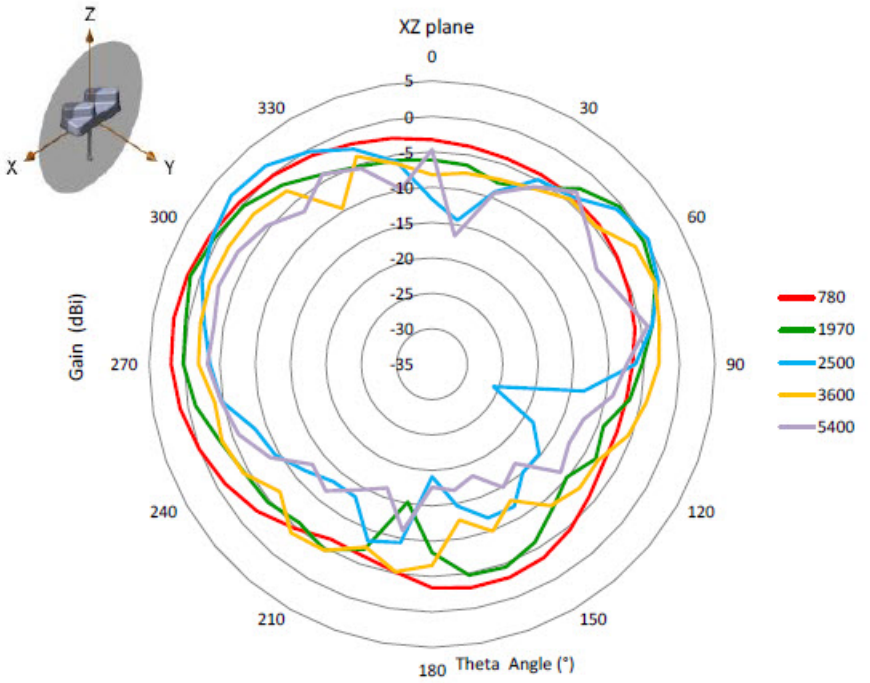

General Safety Precautions



Warning This warning symbol means danger. You are in a situation that could cause bodily injury. Before you work on any equipment, be aware of the hazards involved with electrical circuitry and be familiar with standard practices for preventing accidents. Use the statement number provided at the end of each warning to locate its translation in the translated safety warnings that accompanied this device. **Statement 1071**



Warning Do not work on the system or connect or disconnect cables during periods of lightning activity. **Statement 1001**



Warning Do not locate the outdoor antenna near overhead power lines or other electric light or power circuits, or where it can come into contact with such circuits. When installing the antenna, take extreme care not to come into contact with such circuits, as they may cause serious injury or death. For proper installation and grounding of the antenna, please refer to national and local codes (for example, U.S.:NFPA 70, National Electrical Code, Article 810, Canada:Canadian Electrical Code, Section 54). **Statement 1052**



Warning In order to comply with FCC radio frequency (RF) exposure limits, antennas should be located at a minimum of 7.9 inches (20 cm) or more from the body of all persons. **Statement 332**



Note For your safety, and to help you achieve a good installation, please read and follow these safety precautions.

Mast Mounted or Building Mounted Installations

The following instructions are common to most mast mounted or building mounted installations. For specific installation instructions for each antenna, see the antenna data-sheet and the router hardware installation guide.

- Find someone to help you—installing an antenna is often a two-person job.
- Select your installation site with safety, as well as performance, in mind. Remember that electric power lines and phone lines look alike. For your safety, assume that any overhead line can kill you.
- Contact your electric power company. Tell them your plans and ask them to come look at your proposed installation.
- Do not use a metal ladder.
- Do not work on a wet or windy day.
- Do dress properly—wear shoes with rubber soles and heels, rubber gloves, and a long-sleeved shirt or jacket.

- If the assembly starts to drop, move away from it and let it fall. Because the antenna, mast, cable, and metal guy wires are all excellent conductors of electrical current, even the slightest touch of any of these parts to a power line completes an electrical path through the antenna and the installer.
- If any part of the antenna system should come in contact with a power line, do not touch it or try to remove it yourself. Call your local power company to have it removed safely.
- If an accident should occur with the power lines, call for qualified emergency help immediately.
- Assemble your new antenna on the ground or a level surface at the installation site.
- Connect its coaxial cable while you are on the ground and attach the antenna to the mast.
- Ensure that the mast does not fall as you raise or remove it. Use a durable non-conductive rope secured at each two foot level as the mast is raised. Have an assistant tend the rope, ready to pull the mast clear of any hazards (such as power lines) should it begin to fall.
- Use the mounting bracket provided with the antenna.
- If the installation will use guy wires:
  - Install guy anchor bolts.
  - Estimate the length of guy wire and cut it before raising the mast.
  - Attach guy wires to a mast using guy rings.
  - In the case of a guyed (tall, thin mast) installation, you must have at least one assistant to hold the mast upright while the guy wires are attached and tightened to the anchor bolts.
- Attach a “DANGER” label at eye level on the mast.
- Install ground rods to remove any static electricity buildup and connect a ground wire to the mast and ground rod. Use ground rods designed for that purpose, not a spare piece of pipe.

Unused Antenna Ports

Port plugs must be installed in any unused antenna ports.

The weatherproof caps on the connectors protect the router interior from environmental elements including water, heat, cold, and dust. They are installed on unused ports before the router is shipped.

When you install a new antenna in a port with an N-connector:

- Chassis-mounted antennas—Remove the weather proof cap before installing a chassis-mounted antenna.
- External antennas—Remove weatherproof cap, then connect the supported Cisco cable to the connector.

Guidelines to Achieving Optimal RF and Antenna Performance

Antennas are a critical component of a wireless communication system. Selecting a suitable antenna, an optimal antenna location, or antenna site is essential for optimum performance of a wireless links.

This section covers general tips for optimizing RF performance of indoor and outdoor terrestrial radio systems in the 400-7125 MHz frequency range. Examples of terrestrial radio systems include 4G LTE, 5G NR, Wi-Fi,

LoRa, LR-WPAN and similar. In this context GPS SPS would not be considered a terrestrial system as the signal is received from space, not from another terrestrial site.

Because the antenna transmits and receives radio signals over the air, overall RF performance of the link is susceptible to RF obstructions and common sources of RF interference that can reduce throughput and range of the system.

Follow these guidelines to optimize performance. When in doubt, consult a qualified RF professional, and check with your solution partner for specific recommendations.

Antenna Model Selection and Performance

Consider the following when planning your installation:

- When selecting the antenna, ensure that it covers the frequency ranges or frequency bands of interest, and that it has good RF parameters such as antenna efficiency, VSWR and suitable radiation pattern for every frequency range that your application will use with this antenna.
- Antenna pattern is important. Omni-directional antennas have lower gain, but allow communicating to devices in all azimuth directions. Directional antennas concentrate the beam in a specific direction, making them ideal for point to point communication.
- When a system has multiple RF ports for receive and / or transmit, as is the case for 4G LTE , 5G NR or Wi-Fi, it is highly recommended to populate all the RF ports with suitable antennas to take advantage of MIMO, rather than rely on a single port or single antenna to save on cost. Please see the MIMO section for a detailed description of MIMO benefits.
- For RF systems that support multiple RF ports and multiple RF standards such as LTE, Wi-Fi, and GPS: consider using a multi-element antenna that integrates multiple antennas under the same radome (cover). Doing so may reduce cost compared to deploying and mounting a discrete single port antenna for every RF port.
- For communication between fixed infrastructure devices, such as mesh nodes or a point-to-point backhaul link, each device should have an antenna with the same polarization. If communicating with mobile devices that might be randomly oriented, consider dual-polarized antennas, such as those with both vertical and horizontal or slant +45° and -45° polarized elements.

Antenna Environmental Specifications

The selected antenna must have suitable mechanical and environmental specifications for the environment where it will be deployed. For example, shock and vibration specifications for transportation, corrosion resistant construction for marine and oil and gas industries, or IP (ingress protection) rating for outdoor deployment. Indoor antennas are typically not suitable for harsh industrial environments. Please check with your system integrator for environmental requirements for your application.

Antenna Accessories and Mounting

Consider the following when planning your installation:

- Carefully consider what type of other RF accessories, besides antenna, such as RF cables, lightning arrestors or RF adapters may be required in your installations. It is best to minimize long RF cable runs due to RF signal losses in the cable. Thinner RF cables have more RF loss , thicker cables are less flexible and more expensive.

- Carefully consider how the antenna will be physically mounted, as this may affect antenna selection. For example, a stud mount mechanical mounting design is a better fit for mounting on top of an electrical cabinet than a mast mount antenna.
- For outdoor deployments, follow installation instructions for the antenna. It is good practice to keep protective covers on the radio's RF ports and any antenna or accessory RF ports until the moment the interfaces are mated. This reduces chances of contamination, trapping water or condensation inside the connector, or accidental damage to RF interfaces.

MIMO Performance and Arrays

MIMO systems deliver benefits of higher SNR, higher reliability and higher throughput compared to single antenna systems. In more technical terms, MIMO delivers array gain, diversity gain and multiplexing gain compared to single antenna.

- Array gain — Improvement in SNR (signal to noise ratio) by coherently combining signals from multiple antennas. For example, increasing SNR through beamforming techniques.
- Diversity gain — Improvement in reliability by mitigating deep fading or strong destructive EM wave interference. For example, in a two-antenna system, if one antenna is experiencing deep fading due to an EM destructive null at its location at a given instant, the other antenna is unlikely to have a null at the same instant, and the combined SNR stays at a reliable level. In contrast, a single antenna would see SNR oscillating between good SNR and very poor SNR and reliability would degrade.
- Multiplexing gain — Increase in system capacity or throughput by sending independent data over multiple spatial streams simultaneously. The number of streams cannot be more than the number of antennas. For example, to support three spatial streams, a minimum of three antennas is required. Often there may be additional antennas for diversity or redundancy, such as in the case of 4x4:3, or 4x4 MIMO with 3 spatial streams.

If deploying multiple single-element antennas for a MIMO system in an array, ensure sufficient spacing between the antennas. Omnidirectional elements should generally be at least one wavelength apart at the lowest operating frequency.

Consider the following:

- For Wi-Fi systems operating in the 2.4, 5, and/or 6 GHz bands, space elements at least 5 inches (12.5 cm) apart.
- For 4G LTE and 5G systems with the lowest operating frequency of 617 MHz , space elements at least 20 inches (50 cm) apart.
- Note that spacing between elements inside multi-element MIMO antennas is often less than one wavelength. However multi-element antennas are engineered with MIMO performance in mind, by providing antenna diversity through pattern, polarization, and isolation between MIMO elements.

Antenna siting and location

Consider the following when planning your installation:

- Plan antenna location ahead of time. Ideal location for an antenna is in LOS (line of sight) of the counterpart that it is trying to communicate with. Under LOS conditions the signals propagate directly between the two communication nodes, without relying on signal bouncing off a wall or other structure to reach the counterpart. This is sometimes not possible to achieve in practice, but it is a useful goal to keep in mind when optimizing antenna location.

- While it is good to keep RF cables short, it is most desirable for an antenna to be in the best location it can be to provide the desired coverage.
- For large deployments involving multiple units communicating with each other across a complex urban or industrial landscape, consider running an RF propagation modeling study to predict approximate simulated coverage maps and determine initial placement of the units. A propagation study may help reduce overall deployment cost by discovering and mitigating issues with RF coverage before the infrastructure is physically installed.
- Keep the antenna away from metal obstructions such as heating and air-conditioning ducts, large ceiling trusses, building superstructures, and major power cabling runs. One exception is if the antenna is designed to be mounted on a ground plane. If mounting on a ground plane, mount the antenna on a flat metal surface away from adjacent obstructions.
- It is strongly recommended not to install antennas directly on the router or access point (AP), unless the router or AP is specifically engineered to directly mount the antennas. Products that are engineered for direct mounting of antennas specifically address each of the below issues.
- Reasons to mount antennas away from the router include:
    - Router location may not be optimal location for antenna to communicate with the counterpart wirelessly, so router and antenna may need to be in different locations.
    - Router may have a clutter of Ethernet cable and power cables around it, which will obstruct antenna signal.
    - A number of routers, such as the IR1835, are modular. They have plug-in RF modules for Wi-Fi , 4G LTE or 5G NR such as WP-WIFI6, P-LTEAP18-GL, P-5GS6-GL. These modules have RF connectors spaced close together, and while it is mechanically possible to install four or five antennas directly attached, this will result in significant degradation to RF performance of antennas due to mutual de-tuning between closely spaced antennas. It is strongly recommended to install antennas away from the chassis in modular cases.
- If installing an antenna indoors, consider that the density and electromagnetic properties of the materials used in the building construction determines the number of walls the signal can pass through and still maintain adequate coverage.
    - Paper and vinyl walls have very little effect on signal penetration.
    - Solid and pre-cast concrete walls limit signal penetration to one or two walls without degrading coverage.
    - Concrete and wood block walls limit signal penetration to three or four walls.
    - A signal can penetrate five or six walls constructed of drywall or wood.
    - A thick metal wall causes signals to reflect off, causing poor penetration.
    - A chain link fence or wire mesh spaced between 1 and 1 1/2 in. (2.5 and 3.8 cm) acts as a harmonic reflector that blocks a 2.4-GHz radio signal.
    - Install the antenna away from microwave ovens and 2-GHz cordless phones. These products can cause signal interference because they operate in the same frequency range as the device your antenna is connected to.

Installing the Antenna

Follow these steps to install the bracket onto the antenna, and then install the unit onto a pole.

Before you begin

Clean the mounting surface of the antenna to remove any dust or debris. This will ensure a proper seal for IP67.

Step 1 Slide the mounting bracket onto the antenna mounting stud. Then attach it using the washer, lock washer, and nut in the order shown in the following figure.

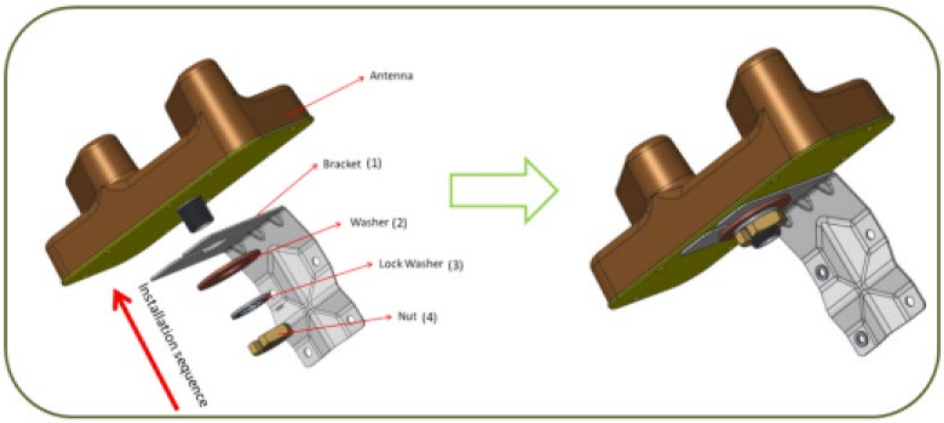

Table 43:

1	Mounting bracket
2	Washers
3	Lock washer
4	Nut

Step 2 Tighten the nut to 20-25Nm torque.

Step 3 Attach the antenna/bracket assembly onto a pole using the U-shaped brackets, washers, lock washers, and nuts, in the order shown in the following figure.

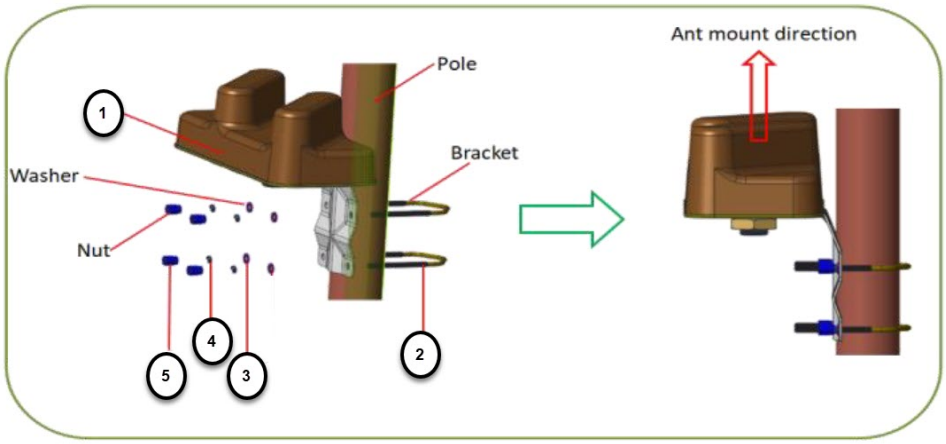

1	Antenna/Bracket assembly
2	U-shaped brackets
3	Washers
4	Lock washers
5	Nuts

Step 4 Tighten the two nuts to 5Nm torque.

Communications, Services, and Additional Information

- To receive timely, relevant information from Cisco, sign up at Cisco Profile Manager.
- To get the business impact you're looking for with the technologies that matter, visit Cisco Services.
- To submit a service request, visit Cisco Support.
- To discover and browse secure, validated enterprise-class apps, products, solutions, and services, visit Cisco DevNet.
- To obtain general networking, training, and certification titles, visit Cisco Press.
- To find warranty information for a specific product or product family, access Cisco Warranty Finder.

Cisco Bug Search Tool

Cisco Bug Search Tool (BST) is a web-based tool that acts as a gateway to the Cisco bug tracking system that maintains a comprehensive list of defects and vulnerabilities in Cisco products and software. BST provides you with detailed defect information about your products and software.

Documentation Feedback

To provide feedback about Cisco technical documentation, use the feedback form available in the right pane of every online document.

Cisco Support Community

Cisco Support Community is a forum for you to ask and answer questions, share suggestions, and collaborate with your peers. Join the forum at https://supportforums.cisco.com/index.jspa.

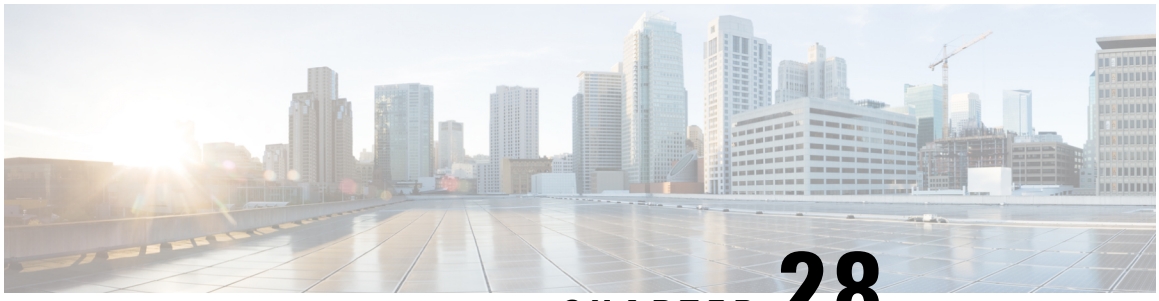

CHAPTER 28

Cisco 4G (LTE) / 5G (FR1) Omnidirectional Outdoor Antenna (ANT-5G-OMNI-OUT-N)

This chapter contains the following:

- Overview, on page 473
- Technical Specifications, on page 474
- Standalone Antenna Performance, on page 476
- Radiation Patterns, on page 478
- General Safety Precautions, on page 479
- Guidelines to Achieving Optimal RF and Antenna Performance, on page 480
- Installation Notes, on page 484
- Communications, Services, and Additional Information, on page 484

Overview

This document describes the Cisco ANT-5G-OMNI-OUT-N omnidirectional outdoor antenna and provides details on radiation patterns, technical specifications, and installation notes. The antenna is designed for IoT devices, Smart metering, and Utility boxes.

The following image shows the antenna:



Technical Specifications

Antenna Type	Dipole

Operating Frequency Range	617-960 MHz 1450-7125 MHz Includes Band 71 (617 698 MHz) **Note** Supports operation in LTE Japan bands (1400 – 1520 MHz)
Wi-Fi Capability	Dual Band Wi-Fi Support
Nominal Impedance	50 Ohms
VSWR (617-960 MHz) VSWR (1450 7125 MHz)	2:1 2:1
Average peak gain (617-960 MHz) Average peak gain (1450-4200 MHz) Average peak gain (4400-7125 MHz)	2.5 dBi 4.0 dBi 4.3 dBi
Average efficiency (617-960 MHz) Average efficiency (1450-4200 MHz) Average efficiency (4400-7125 MHz)	81% 84% 66%
Radiation Pattern	Omni
HPBW Vertical Plane (617-960 MHz) HPBW Vertical Plane (1450-4200 MHz) HPBW Vertical Plane (4400-7125 MHz)	96° 48° 46°
Polarization	Vertical
Average Power Rating	10 W
ESD Protection	DC Grounded
Diameter	Dia. 2.45” (62.2mm)
Height	Height 8.64” (219.4mm)
Weight	1.37 lbs (620 g)
Connector	N-Female (720 hour salt spray rating)
Bracket	Bracket, mounts to Ø1” to 2.12” (25.4 to 54mm) pole. (Horizontal or Vertical) (720 hour salt spray rating)
Installation Torque	4-5 Ft/ lbs
Operational Temperature	-40° to +185°F (-40°C to +85°C)

Storage Temperature	-40° to +185°F (-40°C to +85°C)
Ingress Protection	IP66 and IP67
RoHS-6 Compliant	Yes

Standalone Antenna Performance

VSWR vs Frequency

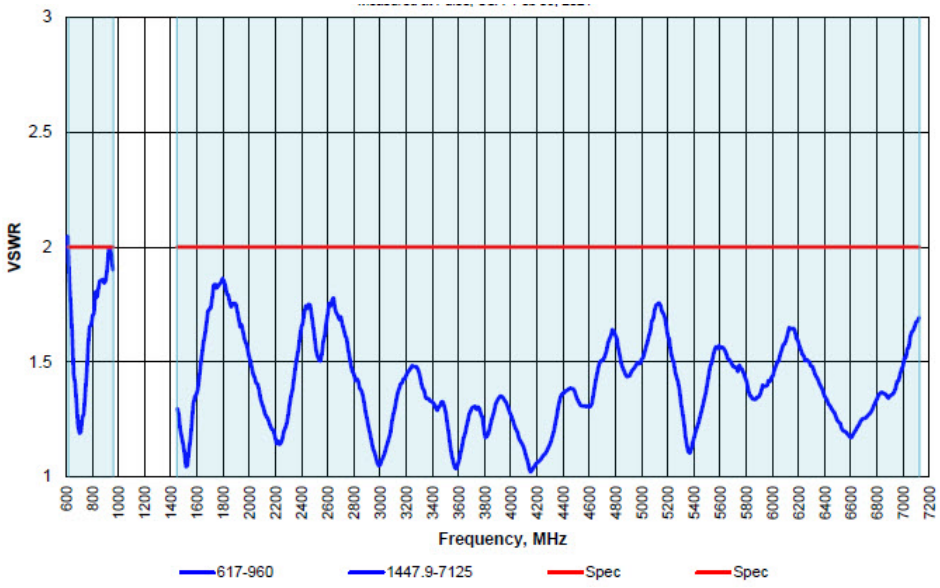

Efficiency vs Frequency

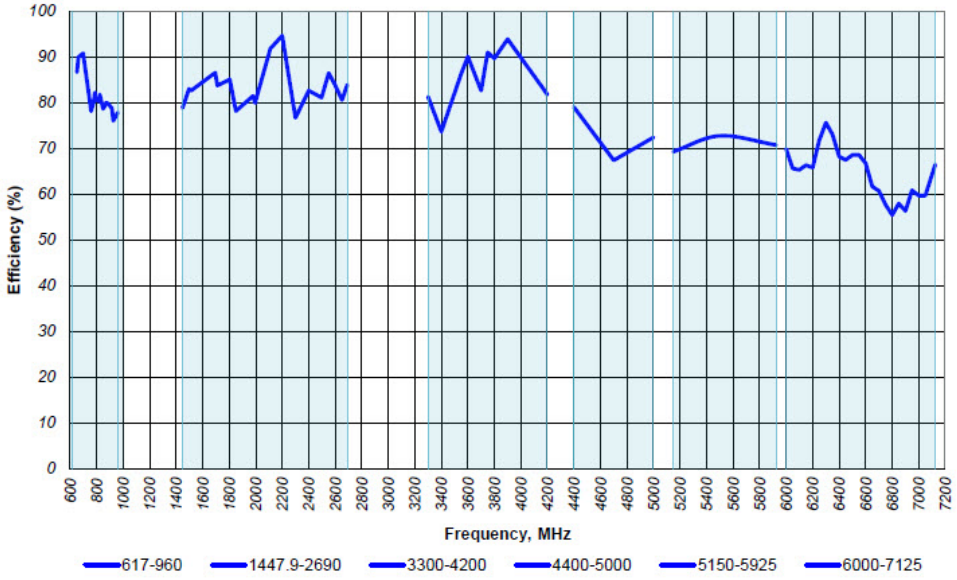

Peak Gain vs Frequency

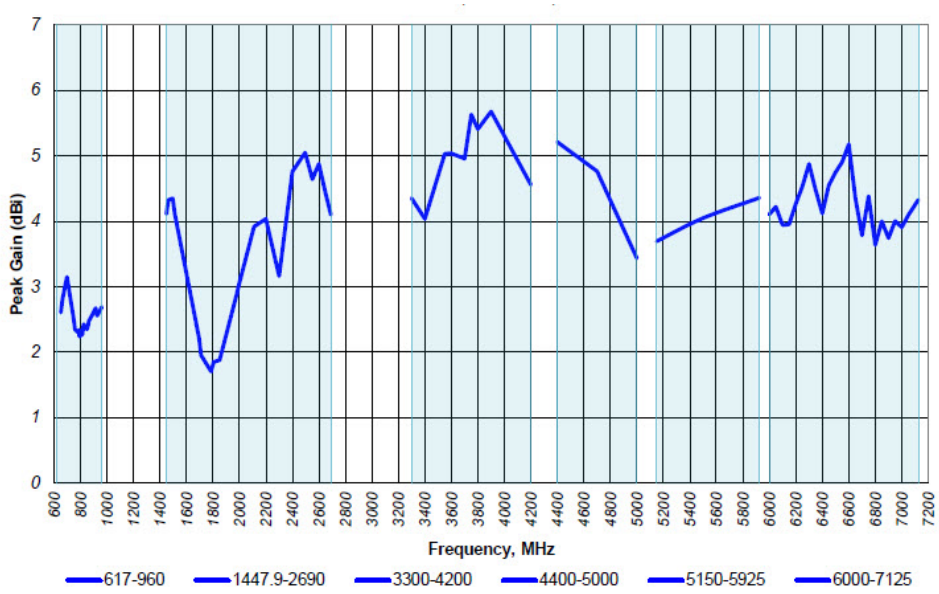

Radiation Patterns

XY plane

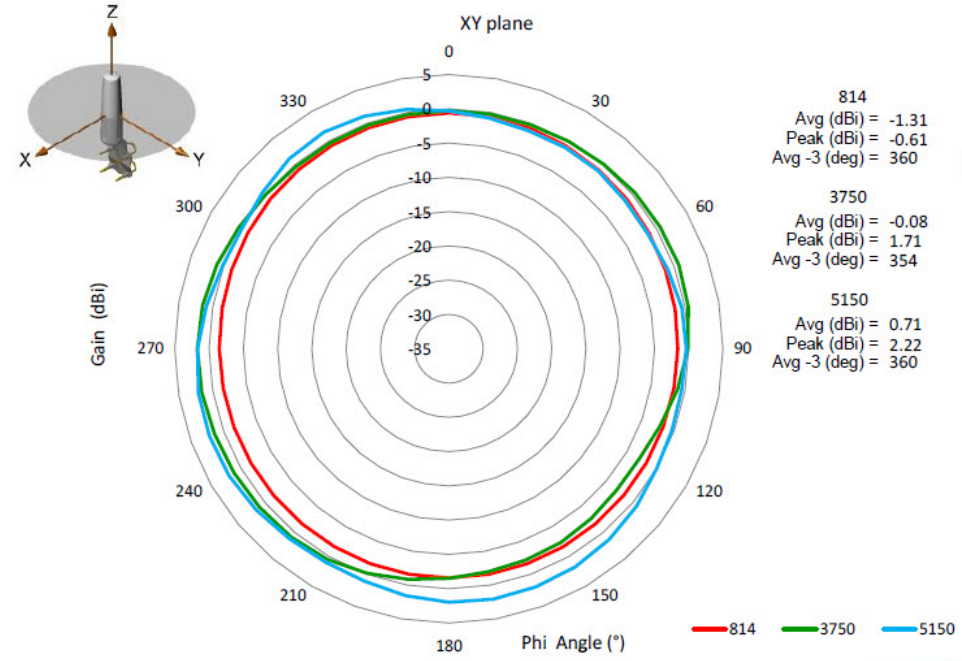

YZ plane

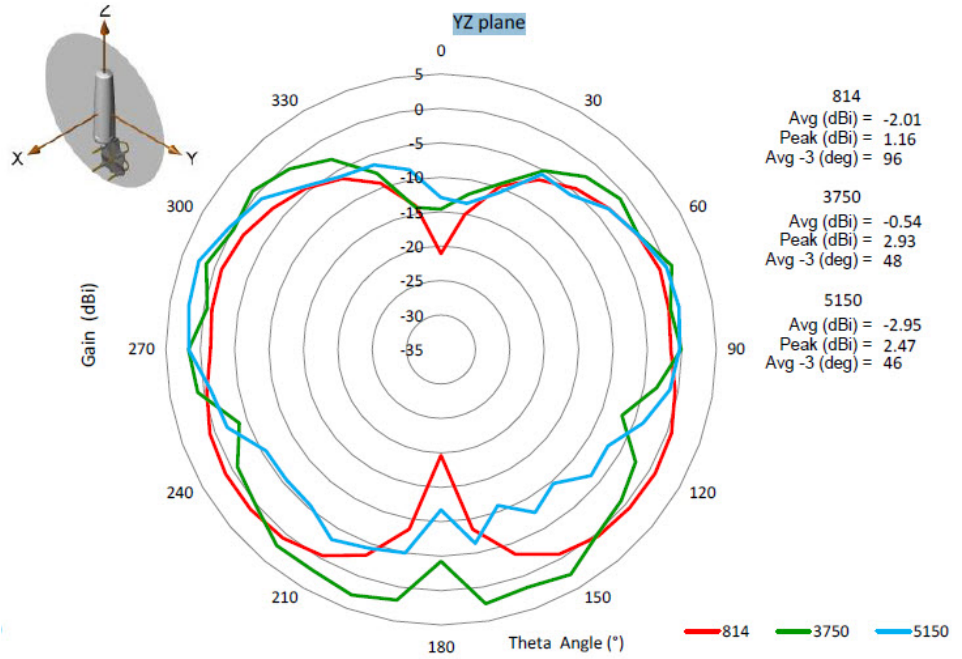

General Safety Precautions

Warning This warning symbol means danger. You are in a situation that could cause bodily injury. Before you work on any equipment, be aware of the hazards involved with electrical circuitry and be familiar with standard practices for preventing accidents. Use the statement number provided at the end of each warning to locate its translation in the translated safety warnings that accompanied this device. **Statement 1071**

Warning Do not work on the system or connect or disconnect cables during periods of lightning activity. **Statement 1001**

Warning Do not locate the outdoor antenna near overhead power lines or other electric light or power circuits, or where it can come into contact with such circuits. When installing the antenna, take extreme care not to come into contact with such circuits, as they may cause serious injury or death. For proper installation and grounding of the antenna, please refer to national and local codes (for example, U.S.:NFPA 70, National Electrical Code, Article 810, Canada:Canadian Electrical Code, Section 54). **Statement 1052**

Warning In order to comply with FCC radio frequency (RF) exposure limits, antennas should be located at a minimum of 7.9 inches (20 cm) or more from the body of all persons. **Statement 332**

Note For your safety, and to help you achieve a good installation, please read and follow these safety precautions.

Mast Mounted or Building Mounted Installations

The following instructions are common to most mast mounted or building mounted installations. For specific installation instructions for each antenna, see the antenna data-sheet and the router hardware installation guide.

- Find someone to help you—installing an antenna is often a two-person job.
- Select your installation site with safety, as well as performance, in mind. Remember that electric power lines and phone lines look alike. For your safety, assume that any overhead line can kill you.
- Contact your electric power company. Tell them your plans and ask them to come look at your proposed installation.
- Do not use a metal ladder.
- Do not work on a wet or windy day.
- Do dress properly—wear shoes with rubber soles and heels, rubber gloves, and a long-sleeved shirt or jacket.

- If the assembly starts to drop, move away from it and let it fall. Because the antenna, mast, cable, and metal guy wires are all excellent conductors of electrical current, even the slightest touch of any of these parts to a power line completes an electrical path through the antenna and the installer.
- If any part of the antenna system should come in contact with a power line, do not touch it or try to remove it yourself. Call your local power company to have it removed safely.
- If an accident should occur with the power lines, call for qualified emergency help immediately.
- Assemble your new antenna on the ground or a level surface at the installation site.
- Connect its coaxial cable while you are on the ground and attach the antenna to the mast.
- Ensure that the mast does not fall as you raise or remove it. Use a durable non-conductive rope secured at each two foot level as the mast is raised. Have an assistant tend the rope, ready to pull the mast clear of any hazards (such as power lines) should it begin to fall.
- Use the mounting bracket provided with the antenna.
- If the installation will use guy wires:
  - Install guy anchor bolts.
  - Estimate the length of guy wire and cut it before raising the mast.
  - Attach guy wires to a mast using guy rings.
  - In the case of a guyed (tall, thin mast) installation, you must have at least one assistant to hold the mast upright while the guy wires are attached and tightened to the anchor bolts.
- Attach a “DANGER” label at eye level on the mast.
- Install ground rods to remove any static electricity buildup and connect a ground wire to the mast and ground rod. Use ground rods designed for that purpose, not a spare piece of pipe.

Unused Antenna Ports

Port plugs must be installed in any unused antenna ports.

The weatherproof caps on the connectors protect the router interior from environmental elements including water, heat, cold, and dust. They are installed on unused ports before the router is shipped.

When you install a new antenna in a port with an N-connector:

- Chassis-mounted antennas—Remove the weather proof cap before installing a chassis-mounted antenna.
- External antennas—Remove weatherproof cap, then connect the supported Cisco cable to the connector.

Guidelines to Achieving Optimal RF and Antenna Performance

Antennas are a critical component of a wireless communication system. Selecting a suitable antenna, an optimal antenna location, or antenna site is essential for optimum performance of a wireless links.

This section covers general tips for optimizing RF performance of indoor and outdoor terrestrial radio systems in the 400-7125 MHz frequency range. Examples of terrestrial radio systems include 4G LTE, 5G NR, Wi-Fi,

LoRa, LR-WPAN and similar. In this context GPS SPS would not be considered a terrestrial system as the signal is received from space, not from another terrestrial site.

Because the antenna transmits and receives radio signals over the air, overall RF performance of the link is susceptible to RF obstructions and common sources of RF interference that can reduce throughput and range of the system.

Follow these guidelines to optimize performance. When in doubt, consult a qualified RF professional, and check with your solution partner for specific recommendations.

Antenna Model Selection and Performance

Consider the following when planning your installation:

- When selecting the antenna, ensure that it covers the frequency ranges or frequency bands of interest, and that it has good RF parameters such as antenna efficiency, VSWR and suitable radiation pattern for every frequency range that your application will use with this antenna.
- Antenna pattern is important. Omni-directional antennas have lower gain, but allow communicating to devices in all azimuth directions. Directional antennas concentrate the beam in a specific direction, making them ideal for point to point communication.
- When a system has multiple RF ports for receive and / or transmit, as is the case for 4G LTE , 5G NR or Wi-Fi, it is highly recommended to populate all the RF ports with suitable antennas to take advantage of MIMO, rather than rely on a single port or single antenna to save on cost. Please see the MIMO section for a detailed description of MIMO benefits.
- For RF systems that support multiple RF ports and multiple RF standards such as LTE, Wi-Fi, and GPS: consider using a multi-element antenna that integrates multiple antennas under the same radome (cover). Doing so may reduce cost compared to deploying and mounting a discrete single port antenna for every RF port.
- For communication between fixed infrastructure devices, such as mesh nodes or a point-to-point backhaul link, each device should have an antenna with the same polarization. If communicating with mobile devices that might be randomly oriented, consider dual-polarized antennas, such as those with both vertical and horizontal or slant +45° and -45° polarized elements.

Antenna Environmental Specifications

The selected antenna must have suitable mechanical and environmental specifications for the environment where it will be deployed. For example, shock and vibration specifications for transportation, corrosion resistant construction for marine and oil and gas industries, or IP (ingress protection) rating for outdoor deployment. Indoor antennas are typically not suitable for harsh industrial environments. Please check with your system integrator for environmental requirements for your application.

Antenna Accessories and Mounting

Consider the following when planning your installation:

- Carefully consider what type of other RF accessories, besides antenna, such as RF cables, lightning arrestors or RF adapters may be required in your installations. It is best to minimize long RF cable runs due to RF signal losses in the cable. Thinner RF cables have more RF loss , thicker cables are less flexible and more expensive.

- Carefully consider how the antenna will be physically mounted, as this may affect antenna selection. For example, a stud mount mechanical mounting design is a better fit for mounting on top of an electrical cabinet than a mast mount antenna.
- For outdoor deployments, follow installation instructions for the antenna. It is good practice to keep protective covers on the radio's RF ports and any antenna or accessory RF ports until the moment the interfaces are mated. This reduces chances of contamination, trapping water or condensation inside the connector, or accidental damage to RF interfaces.

MIMO Performance and Arrays

MIMO systems deliver benefits of higher SNR, higher reliability and higher throughput compared to single antenna systems. In more technical terms, MIMO delivers array gain, diversity gain and multiplexing gain compared to single antenna.

- Array gain — Improvement in SNR (signal to noise ratio) by coherently combining signals from multiple antennas. For example, increasing SNR through beamforming techniques.
- Diversity gain — Improvement in reliability by mitigating deep fading or strong destructive EM wave interference. For example, in a two-antenna system, if one antenna is experiencing deep fading due to an EM destructive null at its location at a given instant, the other antenna is unlikely to have a null at the same instant, and the combined SNR stays at a reliable level. In contrast, a single antenna would see SNR oscillating between good SNR and very poor SNR and reliability would degrade.
- Multiplexing gain — Increase in system capacity or throughput by sending independent data over multiple spatial streams simultaneously. The number of streams cannot be more than the number of antennas. For example, to support three spatial streams, a minimum of three antennas is required. Often there may be additional antennas for diversity or redundancy, such as in the case of 4x4:3, or 4x4 MIMO with 3 spatial streams.

If deploying multiple single-element antennas for a MIMO system in an array, ensure sufficient spacing between the antennas. Omnidirectional elements should generally be at least one wavelength apart at the lowest operating frequency.

Consider the following:

- For Wi-Fi systems operating in the 2.4, 5, and/or 6 GHz bands, space elements at least 5 inches (12.5 cm) apart.
- For 4G LTE and 5G systems with the lowest operating frequency of 617 MHz , space elements at least 20 inches (50 cm) apart.
- Note that spacing between elements inside multi-element MIMO antennas is often less than one wavelength. However multi-element antennas are engineered with MIMO performance in mind, by providing antenna diversity through pattern, polarization, and isolation between MIMO elements.

Antenna siting and location

Consider the following when planning your installation:

- Plan antenna location ahead of time. Ideal location for an antenna is in LOS (line of sight) of the counterpart that it is trying to communicate with. Under LOS conditions the signals propagate directly between the two communication nodes, without relying on signal bouncing off a wall or other structure to reach the counterpart. This is sometimes not possible to achieve in practice, but it is a useful goal to keep in mind when optimizing antenna location.

- While it is good to keep RF cables short, it is most desirable for an antenna to be in the best location it can be to provide the desired coverage.
- For large deployments involving multiple units communicating with each other across a complex urban or industrial landscape, consider running an RF propagation modeling study to predict approximate simulated coverage maps and determine initial placement of the units. A propagation study may help reduce overall deployment cost by discovering and mitigating issues with RF coverage before the infrastructure is physically installed.
- Keep the antenna away from metal obstructions such as heating and air-conditioning ducts, large ceiling trusses, building superstructures, and major power cabling runs. One exception is if the antenna is designed to be mounted on a ground plane. If mounting on a ground plane, mount the antenna on a flat metal surface away from adjacent obstructions.
- It is strongly recommended not to install antennas directly on the router or access point (AP), unless the router or AP is specifically engineered to directly mount the antennas. Products that are engineered for direct mounting of antennas specifically address each of the below issues.
- Reasons to mount antennas away from the router include:
    - Router location may not be optimal location for antenna to communicate with the counterpart wirelessly, so router and antenna may need to be in different locations.
    - Router may have a clutter of Ethernet cable and power cables around it, which will obstruct antenna signal.
    - A number of routers, such as the IR1835, are modular. They have plug-in RF modules for Wi-Fi , 4G LTE or 5G NR such as WP-WIFI6, P-LTEAP18-GL, P-5GS6-GL. These modules have RF connectors spaced close together, and while it is mechanically possible to install four or five antennas directly attached, this will result in significant degradation to RF performance of antennas due to mutual de-tuning between closely spaced antennas. It is strongly recommended to install antennas away from the chassis in modular cases.
- If installing an antenna indoors, consider that the density and electromagnetic properties of the materials used in the building construction determines the number of walls the signal can pass through and still maintain adequate coverage.
    - Paper and vinyl walls have very little effect on signal penetration.
    - Solid and pre-cast concrete walls limit signal penetration to one or two walls without degrading coverage.
    - Concrete and wood block walls limit signal penetration to three or four walls.
    - A signal can penetrate five or six walls constructed of drywall or wood.
    - A thick metal wall causes signals to reflect off, causing poor penetration.
    - A chain link fence or wire mesh spaced between 1 and 1 1/2 in. (2.5 and 3.8 cm) acts as a harmonic reflector that blocks a 2.4-GHz radio signal.
    - Install the antenna away from microwave ovens and 2-GHz cordless phones. These products can cause signal interference because they operate in the same frequency range as the device your antenna is connected to.

Installation Notes

The antenna is designed to connect to a dedicated antenna port on the device. No special tools are required to install the antenna.

The antenna is resistant to the full range of outdoor environments. After the antenna is attached to the access point, seal the connections to prevent moisture and other weathering elements from affecting performance. Cisco recommends using a coax seal (such as CoaxSeal) for outdoor connections. Silicone sealant or electrical tape are not recommended for sealing outdoor connections.

Tools and Equipment Required

No tools are required to mount the antenna to the device. However, you may need a ¾-in. (19-mm) open end or combination wrench (or adjustable wrench) to remove the antenna port covers.

For information about tools required to mount the access point, see the appropriate device documentation.

Mounting the Antenna

To connect the antenna to the access point, follow these steps:

1. If necessary, remove the antenna port cover.
2. Align the antenna's N-Female connector with the appropriate antenna port on the device.
3. Gently push the antenna into the port.
4. Hand-tighten the antenna.

Communications, Services, and Additional Information

- To receive timely, relevant information from Cisco, sign up at Cisco Profile Manager.
- To get the business impact you're looking for with the technologies that matter, visit Cisco Services.
- To submit a service request, visit Cisco Support.
- To discover and browse secure, validated enterprise-class apps, products, solutions, and services, visit Cisco DevNet.
- To obtain general networking, training, and certification titles, visit Cisco Press.
- To find warranty information for a specific product or product family, access Cisco Warranty Finder.

Cisco Bug Search Tool

Cisco Bug Search Tool (BST) is a web-based tool that acts as a gateway to the Cisco bug tracking system that maintains a comprehensive list of defects and vulnerabilities in Cisco products and software. BST provides you with detailed defect information about your products and software.

Documentation Feedback

To provide feedback about Cisco technical documentation, use the feedback form available in the right pane of every online document.

Cisco Support Community

Cisco Support Community is a forum for you to ask and answer questions, share suggestions, and collaborate with your peers. Join the forum at https://supportforums.cisco.com/index.jspa.

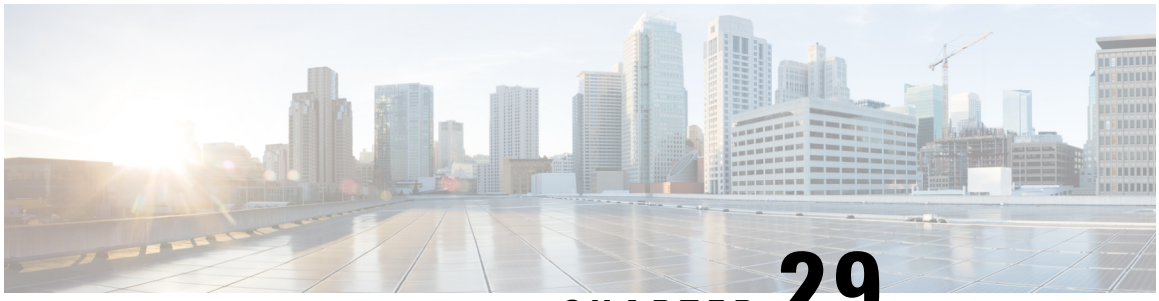

CHAPTER 29

Cisco Cellular 2-in-1 Vehicle Mount and Fixed Infrastructure Antenna (ANT-2-4G2-O)

This chapter contains the following:

- Overview, on page 487
- Technical Specifications, on page 490
- Environmental and Operational Specifications, on page 493
- General Safety Precautions, on page 494
- Guidelines to Achieving Optimal RF and Antenna Performance, on page 496
- Installing the Antenna, on page 499
- Communications, Services, and Additional Information, on page 500

Overview

This section describes the technical specifications and installation instructions for the Cisco Cellular 2-in-1 Vehicle Mount and Fixed Infrastructure Antenna, hereafter referred to as the antenna. The antenna is a two port antenna with two elements designed to cover the 698-960, 1448-1511, and 1710-2700 MHz cellular bands. The antenna can be mounted on the roof of a vehicle or fixed structure. The antenna meets or exceeds a variety of environmental ruggedization specifications for transportation applications.

Caution Read the information in Safety Precautions before installing or replacing antennas.

Antenna Features

The antenna features:

- Two cellular antenna elements within one radome
- Outdoor and transportation ready
- Roof mount installation
- Dual cellular elements supporting 698-960, 1448-1511 and 1710-2700 MHz
    - Omnidirectional, vertically polarized, MIMO

- Integrated 2 foot cables with TNC male connectors

- LTE elements are interchangeable, either one can be connected to Main or Aux.

The antenna may require RF extension cables. A shorter 2 foot cable length was selected on LTE WAN to allow you to optimize LTE WAN performance and wireless range. If you require a cable length longer than 2 foot with the antenna, then you would need to select RF extension cables of appropriate length and type.

Thicker RF cables, such as LMR-600, LMR-400, or LMR-240, result in lower loss, higher RF performance and longer range of wireless network than thinner cables such as LMR-195, LMR-200. The trade-off is that thicker cables are more difficult to bend and route.

For optimal performance, the length of thin cables needs to be kept as short as possible. For example, 2 foot and 10 foot lengths of LMR-195 cable at 2700 MHz frequency would have losses of 0.5dB and 2.3dB respectively. In this example at 2700 MHz the area covered by the wireless system with the 10 foot cable is reduced by 34% compared to 2 foot cable. Radius of communication is degraded by 20% in 10 foot vs 2 foot case.



Note Loss with the 17 foot GPS cable is compensated by the gain of the active GPS antenna and has little impact on GPS performance.

Antenna Model

Antenna Model	Description
ANT-2-4G2-O	Cisco Cellular 2-in-1 Vehicle Mount and Fixed Infrastructure Antenna

Antenna Assembly

Figure 164: Cisco ANT-2-4G2-O Antenna



Figure 165: Cisco ANT-2-4G2-O Mechanical Details

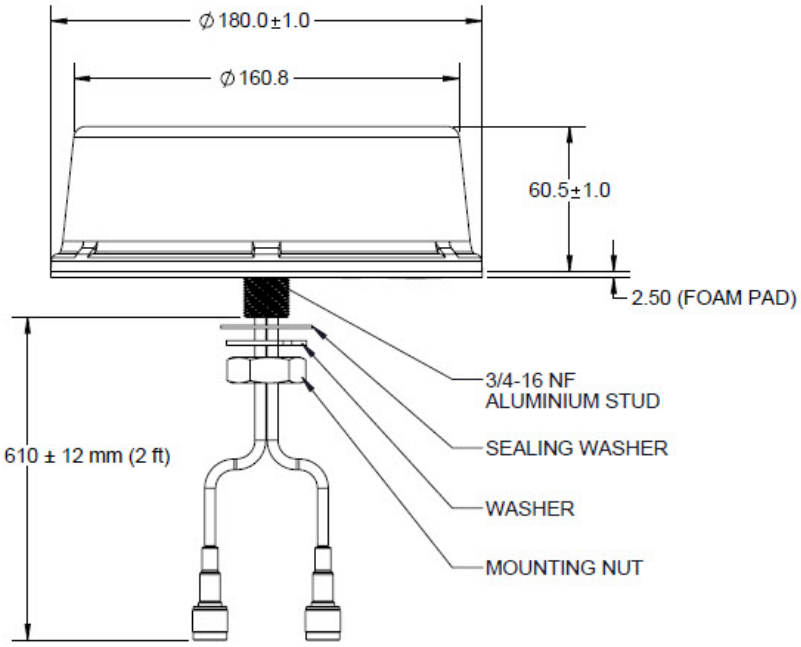

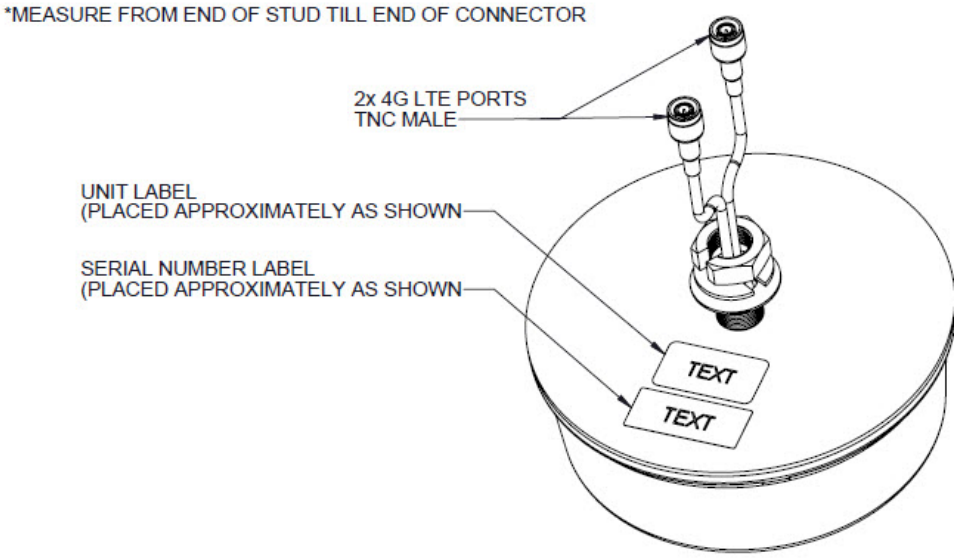

Note All dimensions are in millimeters [inches] unless explicitly stated otherwise in the drawing.

Technical Specifications

The following sections include:

Radio Frequency Specifications

Specification	Description
Antenna type	Dual element, omnidirectional, 2x2 MIMO
Frequency	• 698 to 960 MHz • 1448 to 1511 MHz • 1710 to 2700 MHz
Nominal impedance	50 ohms
VSWR	• 2.1:1 maximum-698 to 960 MHz • 2.4:1 maximum at 1448 MHz edge, 2.2:1 typical 1448-1511 MHz • 2.0:1 maximum-1710 to 2700 MHz
Gain	The gain values (dBi) for each frequency range are: • 2.6 dBi typical, 3.8 dBi maximum-698 to 960 MHz • 3.8 dBI typical, 4.3 dBI maximum 1448 to 1511 MHz • 4.6 dBi typical, 5.5 dBI5 dBI maximum-1710 to 2700 MHz
Isolation Cellular to cellular (Main to Aux)	• 15 dB minimum - 698 to 960 MHz • 20 dB minimum - 1448 to 1511 MHz • 20 dB minimum - 1710 to 2700 MHz
Efficiency	Antennas were designed and tested to high RF efficiency in all supported cellular bands. Detailed technical specifications can be obtained through your Cisco authorized partner or Cisco account representative.
Polarization	Linear, Vertical
Radiation Pattern	Omnidirectional

Antenna Radiation Patterns

In the following graphics of the radiation patterns, the blue line denotes Port 1 and the red line denotes Port 2.

Figure 166: 698 MHz Cellular Antenna Radiation Patterns

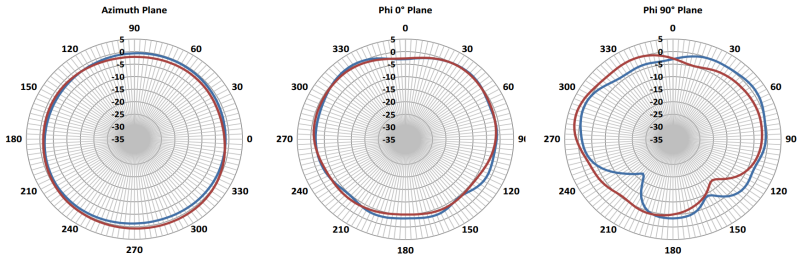

Figure 167: 880 MHz Cellular Antenna Radiation Patterns

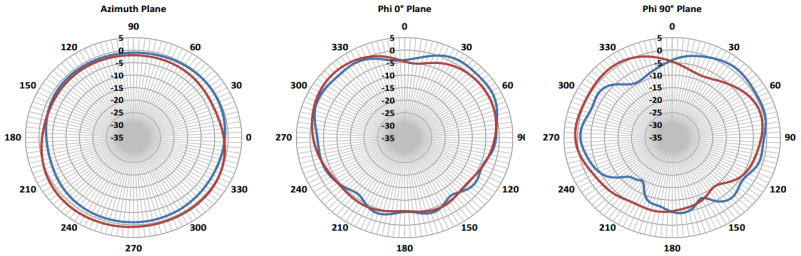

Figure 168: 960 MHz Cellular Antenna Radiation Patterns

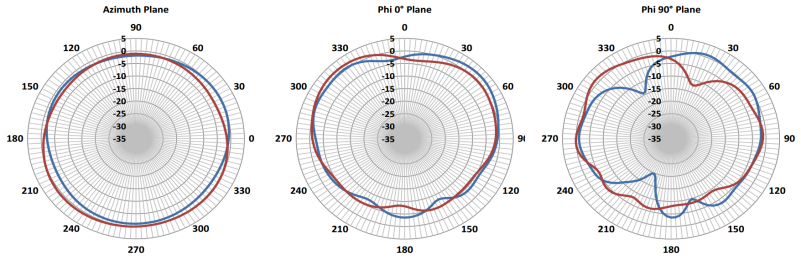

Figure 169: 1470 MHz Cellular Antenna Radiation Patterns

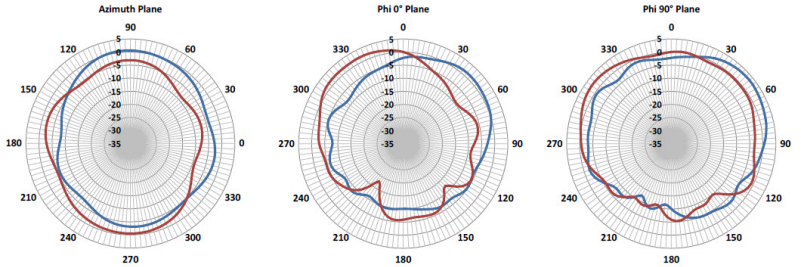

Figure 170: 1710 MHz Cellular Antenna Radiation Patterns

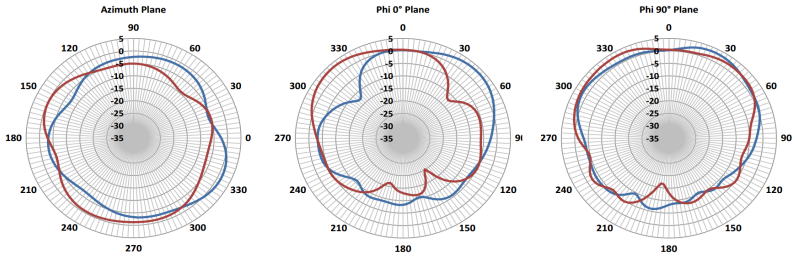

Figure 171: 2170 MHz Cellular Antenna Radiation Patterns

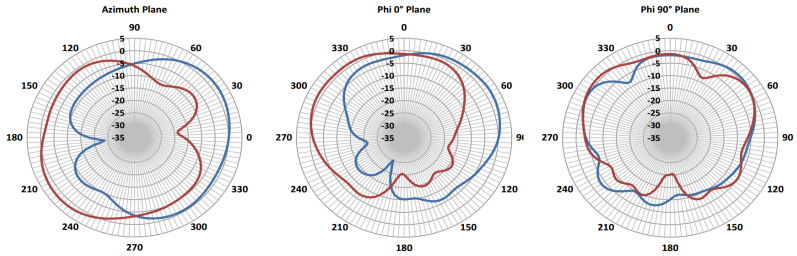

Figure 172: 2700 MHz Cellular Antenna Radiation Patterns

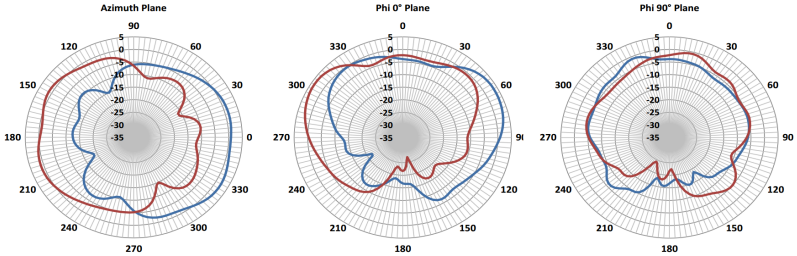

Environmental and Operational Specifications

Table 44: Environmental and Operational Specifications for the Cisco ANT-2-4G2-O Antenna

Specification	Description
Operating temperature range	-40 to 158°F (-40 to 70°C)
Storage temperature range	-40 to 185°F (-40 to 85°C)
Altitude	15,000 feet. (4.5 km)
Humidity	5 to 95%
Vibration, Shock, Thermal, Corrosion, Seismic	Outdoor IP67. Tested to a variety of appropriate industrial, vehicular, transportation, and mil-spec standards.

Mechanical Specifications

Table 45: Mechanical Specifications for the Cisco ANT-2-4G2-O Antenna

Specification	Description
Mount style	Roof mount, bulkhead
Location	Outdoor
Connector	TNC male
Cable type	RG-58
Cable length	2 foot. (61 cm)
Dimensions	7.1 in. (18.0 cm) diameter, 2.4 in. (6.05 cm) height
Weight	1.48 lbs (0.67 kg)
IP rating	IP67
Radome	Polycarbonate, UV resistant, black
Material substance compliance	ROHS compliant

Power Specifications

Table 46: Power Specifications for the Cisco ANT-2-4G2-O Antenna

Specification	Description
Nominal Impedance	50 ohms
Maximum input power per port	5 watts

General Safety Precautions

Warning This warning symbol means danger. You are in a situation that could cause bodily injury. Before you work on any equipment, be aware of the hazards involved with electrical circuitry and be familiar with standard practices for preventing accidents. Use the statement number provided at the end of each warning to locate its translation in the translated safety warnings that accompanied this device. **Statement 1071**

Warning Do not work on the system or connect or disconnect cables during periods of lightning activity. **Statement 1001**

Warning Do not locate the outdoor antenna near overhead power lines or other electric light or power circuits, or where it can come into contact with such circuits. When installing the antenna, take extreme care not to come into contact with such circuits, as they may cause serious injury or death. For proper installation and grounding of the antenna, please refer to national and local codes (for example, U.S.:NFPA 70, National Electrical Code, Article 810, Canada:Canadian Electrical Code, Section 54). **Statement 1052**

Warning In order to comply with FCC radio frequency (RF) exposure limits, antennas should be located at a minimum of 7.9 inches (20 cm) or more from the body of all persons. **Statement 332**

Note For your safety, and to help you achieve a good installation, please read and follow these safety precautions.

Mast Mounted or Building Mounted Installations

The following instructions are common to most mast mounted or building mounted installations. For specific installation instructions for each antenna, see the antenna data-sheet and the router hardware installation guide.

- Find someone to help you—installing an antenna is often a two-person job.
- Select your installation site with safety, as well as performance, in mind. Remember that electric power lines and phone lines look alike. For your safety, assume that any overhead line can kill you.
- Contact your electric power company. Tell them your plans and ask them to come look at your proposed installation.
- Do not use a metal ladder.
- Do not work on a wet or windy day.
- Do dress properly—wear shoes with rubber soles and heels, rubber gloves, and a long-sleeved shirt or jacket.
- If the assembly starts to drop, move away from it and let it fall. Because the antenna, mast, cable, and metal guy wires are all excellent conductors of electrical current, even the slightest touch of any of these parts to a power line completes an electrical path through the antenna and the installer.
- If any part of the antenna system should come in contact with a power line, do not touch it or try to remove it yourself. Call your local power company to have it removed safely.
- If an accident should occur with the power lines, call for qualified emergency help immediately.
- Assemble your new antenna on the ground or a level surface at the installation site.
- Connect its coaxial cable while you are on the ground and attach the antenna to the mast.

- Ensure that the mast does not fall as you raise or remove it. Use a durable non-conductive rope secured at each two foot level as the mast is raised. Have an assistant tend the rope, ready to pull the mast clear of any hazards (such as power lines) should it begin to fall.
- Use the mounting bracket provided with the antenna.
- If the installation will use guy wires:
  - Install guy anchor bolts.
  - Estimate the length of guy wire and cut it before raising the mast.
  - Attach guy wires to a mast using guy rings.
  - In the case of a guyed (tall, thin mast) installation, you must have at least one assistant to hold the mast upright while the guy wires are attached and tightened to the anchor bolts.
- Attach a “DANGER” label at eye level on the mast.
- Install ground rods to remove any static electricity buildup and connect a ground wire to the mast and ground rod. Use ground rods designed for that purpose, not a spare piece of pipe.

Unused Antenna Ports

Port plugs must be installed in any unused antenna ports.

The weatherproof caps on the connectors protect the router interior from environmental elements including water, heat, cold, and dust. They are installed on unused ports before the router is shipped.

When you install a new antenna in a port with an N-connector:

- Chassis-mounted antennas—Remove the weather proof cap before installing a chassis-mounted antenna.
- External antennas—Remove weatherproof cap, then connect the supported Cisco cable to the connector.

Guidelines to Achieving Optimal RF and Antenna Performance

Antennas are a critical component of a wireless communication system. Selecting a suitable antenna, an optimal antenna location, or antenna site is essential for optimum performance of a wireless links.

This section covers general tips for optimizing RF performance of indoor and outdoor terrestrial radio systems in the 400-7125 MHz frequency range. Examples of terrestrial radio systems include 4G LTE, 5G NR, Wi-Fi, LoRa, LR-WPAN and similar. In this context GPS SPS would not be considered a terrestrial system as the signal is received from space, not from another terrestrial site.

Because the antenna transmits and receives radio signals over the air, overall RF performance of the link is susceptible to RF obstructions and common sources of RF interference that can reduce throughput and range of the system.

Follow these guidelines to optimize performance. When in doubt, consult a qualified RF professional, and check with your solution partner for specific recommendations.

Antenna Model Selection and Performance

Consider the following when planning your installation:

- When selecting the antenna, ensure that it covers the frequency ranges or frequency bands of interest, and that it has good RF parameters such as antenna efficiency, VSWR and suitable radiation pattern for every frequency range that your application will use with this antenna.
- Antenna pattern is important. Omni-directional antennas have lower gain, but allow communicating to devices in all azimuth directions. Directional antennas concentrate the beam in a specific direction, making them ideal for point to point communication.
- When a system has multiple RF ports for receive and / or transmit, as is the case for 4G LTE , 5G NR or Wi-Fi, it is highly recommended to populate all the RF ports with suitable antennas to take advantage of MIMO, rather than rely on a single port or single antenna to save on cost. Please see the MIMO section for a detailed description of MIMO benefits.
- For RF systems that support multiple RF ports and multiple RF standards such as LTE, Wi-Fi, and GPS: consider using a multi-element antenna that integrates multiple antennas under the same radome (cover). Doing so may reduce cost compared to deploying and mounting a discrete single port antenna for every RF port.
- For communication between fixed infrastructure devices, such as mesh nodes or a point-to-point backhaul link, each device should have an antenna with the same polarization. If communicating with mobile devices that might be randomly oriented, consider dual-polarized antennas, such as those with both vertical and horizontal or slant +45° and -45° polarized elements.

Antenna Environmental Specifications

The selected antenna must have suitable mechanical and environmental specifications for the environment where it will be deployed. For example, shock and vibration specifications for transportation, corrosion resistant construction for marine and oil and gas industries, or IP (ingress protection) rating for outdoor deployment. Indoor antennas are typically not suitable for harsh industrial environments. Please check with your system integrator for environmental requirements for your application.

Antenna Accessories and Mounting

Consider the following when planning your installation:

- Carefully consider what type of other RF accessories, besides antenna, such as RF cables, lightning arrestors or RF adapters may be required in your installations. It is best to minimize long RF cable runs due to RF signal losses in the cable. Thinner RF cables have more RF loss , thicker cables are less flexible and more expensive.
- Carefully consider how the antenna will be physically mounted, as this may affect antenna selection. For example, a stud mount mechanical mounting design is a better fit for mounting on top of an electrical cabinet than a mast mount antenna.
- For outdoor deployments, follow installation instructions for the antenna. It is good practice to keep protective covers on the radio’s RF ports and any antenna or accessory RF ports until the moment the interfaces are mated. This reduces chances of contamination, trapping water or condensation inside the connector, or accidental damage to RF interfaces.

MIMO Performance and Arrays

MIMO systems deliver benefits of higher SNR, higher reliability and higher throughput compared to single antenna systems. In more technical terms, MIMO delivers array gain, diversity gain and multiplexing gain compared to single antenna.

- Array gain — Improvement in SNR (signal to noise ratio) by coherently combining signals from multiple antennas. For example, increasing SNR through beamforming techniques.
- Diversity gain — Improvement in reliability by mitigating deep fading or strong destructive EM wave interference. For example, in a two-antenna system, if one antenna is experiencing deep fading due to an EM destructive null at its location at a given instant, the other antenna is unlikely to have a null at the same instant, and the combined SNR stays at a reliable level. In contrast, a single antenna would see SNR oscillating between good SNR and very poor SNR and reliability would degrade.
- Multiplexing gain — Increase in system capacity or throughput by sending independent data over multiple spatial streams simultaneously. The number of streams cannot be more than the number of antennas. For example, to support three spatial streams, a minimum of three antennas is required. Often there may be additional antennas for diversity or redundancy, such as in the case of 4x4:3, or 4x4 MIMO with 3 spatial streams.

If deploying multiple single-element antennas for a MIMO system in an array, ensure sufficient spacing between the antennas. Omnidirectional elements should generally be at least one wavelength apart at the lowest operating frequency.

Consider the following:

- For Wi-Fi systems operating in the 2.4, 5, and/or 6 GHz bands, space elements at least 5 inches (12.5 cm) apart.
- For 4G LTE and 5G systems with the lowest operating frequency of 617 MHz , space elements at least 20 inches (50 cm) apart.
- Note that spacing between elements inside multi-element MIMO antennas is often less than one wavelength. However multi-element antennas are engineered with MIMO performance in mind, by providing antenna diversity through pattern, polarization, and isolation between MIMO elements.

Antenna siting and location

Consider the following when planning your installation:

- Plan antenna location ahead of time. Ideal location for an antenna is in LOS (line of sight) of the counterpart that it is trying to communicate with. Under LOS conditions the signals propagate directly between the two communication nodes, without relying on signal bouncing off a wall or other structure to reach the counterpart. This is sometimes not possible to achieve in practice, but it is a useful goal to keep in mind when optimizing antenna location.
- While it is good to keep RF cables short, it is most desirable for an antenna to be in the best location it can be to provide the desired coverage.
- For large deployments involving multiple units communicating with each other across a complex urban or industrial landscape, consider running an RF propagation modeling study to predict approximate simulated coverage maps and determine initial placement of the units. A propagation study may help reduce overall deployment cost by discovering and mitigating issues with RF coverage before the infrastructure is physically installed.
- Keep the antenna away from metal obstructions such as heating and air-conditioning ducts, large ceiling trusses, building superstructures, and major power cabling runs. One exception is if the antenna is designed to be mounted on a ground plane. If mounting on a ground plane, mount the antenna on a flat metal surface away from adjacent obstructions.

- It is strongly recommended not to install antennas directly on the router or access point (AP), unless the router or AP is specifically engineered to directly mount the antennas. Products that are engineered for direct mounting of antennas specifically address each of the below issues.
- Reasons to mount antennas away from the router include:
  - Router location may not be optimal location for antenna to communicate with the counterpart wirelessly, so router and antenna may need to be in different locations.
  - Router may have a clutter of Ethernet cable and power cables around it, which will obstruct antenna signal.
  - A number of routers, such as the IR1835, are modular. They have plug-in RF modules for Wi-Fi , 4G LTE or 5G NR such as WP-WIFI6, P-LTEAP18-GL, P-5GS6-GL. These modules have RF connectors spaced close together, and while it is mechanically possible to install four or five antennas directly attached, this will result in significant degradation to RF performance of antennas due to mutual de-tuning between closely spaced antennas. It is strongly recommended to install antennas away from the chassis in modular cases.
- If installing an antenna indoors, consider that the density and electromagnetic properties of the materials used in the building construction determines the number of walls the signal can pass through and still maintain adequate coverage.
  - Paper and vinyl walls have very little effect on signal penetration.
  - Solid and pre-cast concrete walls limit signal penetration to one or two walls without degrading coverage.
  - Concrete and wood block walls limit signal penetration to three or four walls.
  - A signal can penetrate five or six walls constructed of drywall or wood.
  - A thick metal wall causes signals to reflect off, causing poor penetration.
  - A chain link fence or wire mesh spaced between 1 and 1 1/2 in. (2.5 and 3.8 cm) acts as a harmonic reflector that blocks a 2.4-GHz radio signal.
  - Install the antenna away from microwave ovens and 2-GHz cordless phones. These products can cause signal interference because they operate in the same frequency range as the device your antenna is connected to.

Installing the Antenna

The antenna installation includes the following procedures:

Contents of the Antenna Kit

The antenna kit contains:

- 1 x Cisco ANT-2-4G2-O antenna

Tools and Equipment Required

In addition to the parts included in the antenna kit described in the section, you must provide the following tool to install the antenna on the router:

- Open-ended wrench
- Electric drill

Note This list does not include the tools and equipment required to assemble and erect the tower, mast, or other structure you intend to mount your antenna on.

Mounting the Antenna

Note A clean, flat surface at least 20 x 20 cm (8 x 8 in.) in area is required for mounting the antenna.

Follow these instructions to mount the antenna:

1. Mark the desired location where you plan to mount the antenna and create a hole through the surface The diameter of the hole must be at least 0.75 in. (1.91 cm).
2. Thread the cables through the hole and insert the aluminum stud on the underside of the antenna into the hole. Ensure that the foam gasket on the underside of the antenna sits flush against the mounting surface.
3. Inside the vehicle, place the rubber sealing washer around the stud. Then place the metal washer and the metal nut onto the stud.
4. Tighten the nut.

Connecting the Antenna to the Router

To attach the router-end of the cable to your router, please see the respective hardware guide for your router.

Note Coaxial cable loses efficiency as the frequency increases, resulting in signal loss. The cable should be kept as short as possible because cable length also determines the amount of signal loss—the longer the cable length or run, the greater the loss).

Communications, Services, and Additional Information

- To receive timely, relevant information from Cisco, sign up at Cisco Profile Manager.
- To get the business impact you're looking for with the technologies that matter, visit Cisco Services.
- To submit a service request, visit Cisco Support.

- To discover and browse secure, validated enterprise-class apps, products, solutions, and services, visit Cisco DevNet.
- To obtain general networking, training, and certification titles, visit Cisco Press.
- To find warranty information for a specific product or product family, access Cisco Warranty Finder.

Cisco Bug Search Tool

Cisco Bug Search Tool (BST) is a web-based tool that acts as a gateway to the Cisco bug tracking system that maintains a comprehensive list of defects and vulnerabilities in Cisco products and software. BST provides you with detailed defect information about your products and software.

Documentation Feedback

To provide feedback about Cisco technical documentation, use the feedback form available in the right pane of every online document.

Cisco Support Community

Cisco Support Community is a forum for you to ask and answer questions, share suggestions, and collaborate with your peers. Join the forum at https://supportforums.cisco.com/index.jspa.

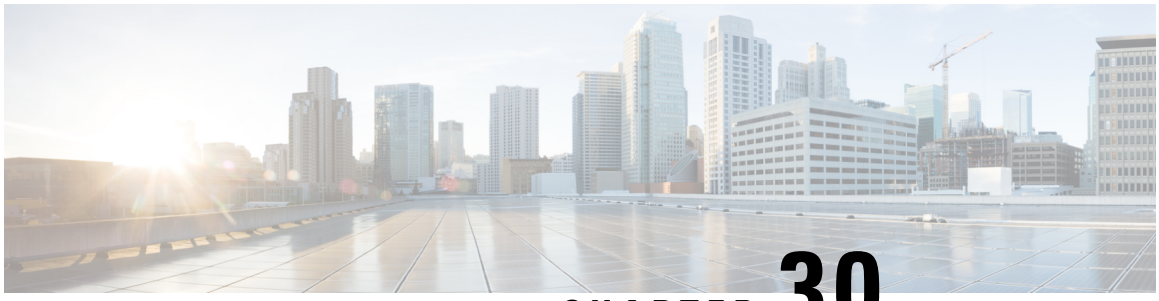

CHAPTER 30

Cisco Dual Port, Dual Band Vehicle Mount and Fixed Infrastructure WLAN Antenna (ANT-2-WLAN-D-O)

This chapter contains the following:

- Overview, on page 503
- Antenna Features, on page 503
- Antenna Model, on page 504
- Antenna Assembly, on page 504
- Technical Specifications, on page 505
- General Safety Precautions, on page 512
- Guidelines to Achieving Optimal RF and Antenna Performance, on page 514
- Installing the Antenna, on page 517
- Communications, Services, and Additional Information, on page 518

Overview

This section describes the technical specifications and installation instructions for the Cisco Dual Port, Dual Band Outdoor Vehicle Mount and Fixed Infrastructure WLAN Antenna, hereafter referred to as the antenna. The antenna is a dual-port antenna designed to cover 2.4 GHz and 5 GHz WLAN bands. The antenna can be mounted on the roof of a vehicle or fixed structure. The antenna meets or exceeds a variety of environmental ruggedization specifications for transportation applications.

Caution Read all the safety information before installing or replacing antennas.

Antenna Features

The antenna features:

- 2.4 and 5 GHz dual band support
- Omnidirectional, vertically polarized, 2x2 MIMO

- Outdoor and transportation ready
- Roof mount installation
- Integrated 3 foot long LMR-240 cables with RP-TNC plug connectors
- The two WiFi elements are interchangeable

Antenna Model

Antenna Model	Description
ANT-2-WLAN-D-O	Cisco Dual Port, Dual Band Vehicle Mount and Fixed Infrastructure WLAN Antenna

Antenna Assembly

Figure 173: Cisco ANT-2-WLAN-D-O Antenna



Details for the ANT-2-WLAN-D-O are shown in the following graphic:

Figure 174: ANT-2-WLAN-D-0 Mechanical Details

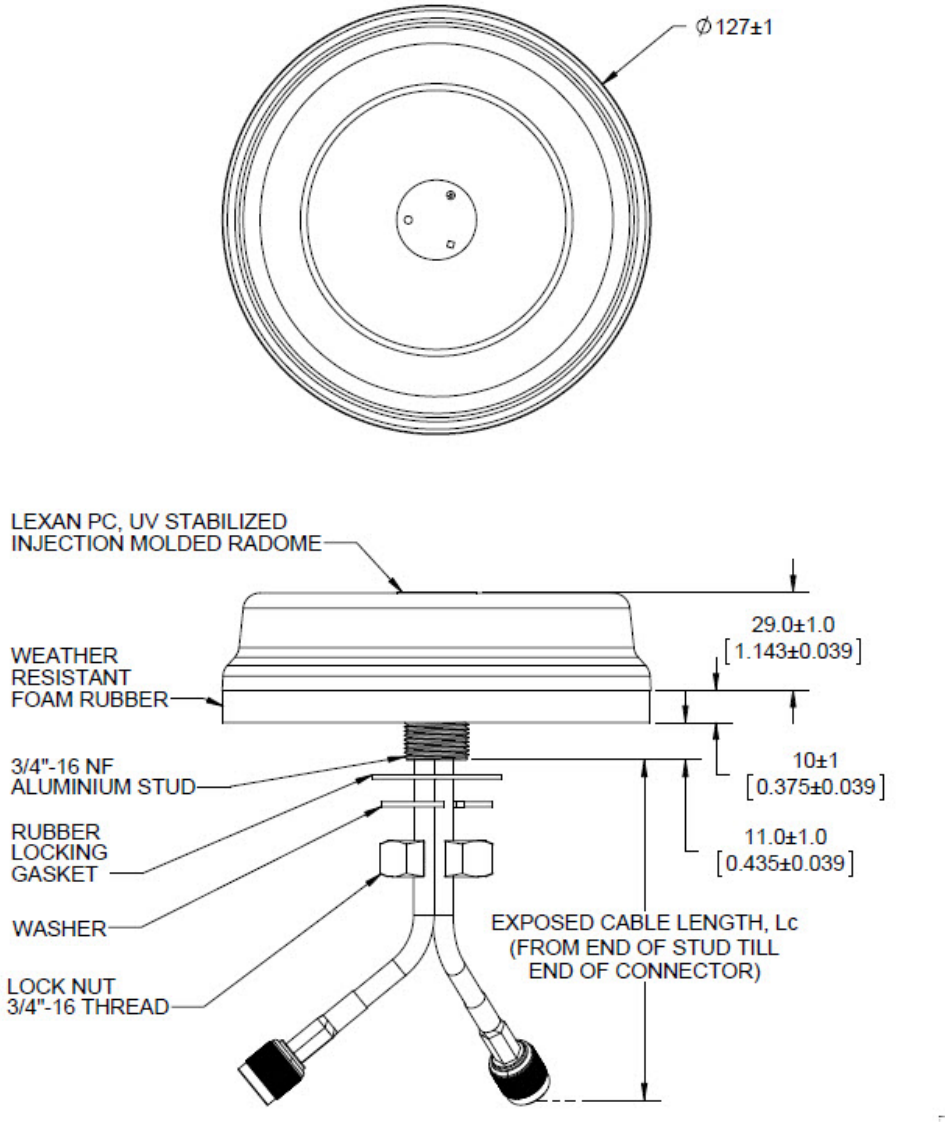

Note All dimensions are in millimeters [inches] unless explicitly stated otherwise in the drawing.

Technical Specifications

This section contains the following:

Radio Frequency Specifications

Specification	Description
Antenna type	Dual element, omnidirectional, 2x2 MIMO
Connectors and cables	Quantity: 2 x 3foot LMR-240 cables with RP-TNC(plug) connectors
Frequency	2400 to 2500 MHz 4900 to 5875 MHz
Nominal impedance	50 ohms
VSWR	2.0:1 Maximum
Gain	The gain values (dBi) for each frequency range are: 4.0 dBi typical, 5.1 dBi maximum at 2400 to 2500 MHz 6.5 dBi typical, 7.0 dBi maximum at 4900 to 5875 MHz
3 dB beamwidth (vertical plane)	40 degrees-2400 to 2500 MHz 30 degrees-4900 to 5875 MHz
3 dB beamwidth (horizontal plane)	Omnidirectional
Isolation	15 dB minimum at 2400 to 2500 MHz 15 dB minimum at 4900 to 5875 MHz
Polarization	Linear, Vertical
Radiation Pattern	Omnidirectional

Antenna Radiation Patterns

In the following graphics of the radiation patterns, the blue line denotes Port 1 and the red line denotes Port 2.

Figure 175: 2.46 GHz Antenna Radiation Pattern-Horizontal Plane

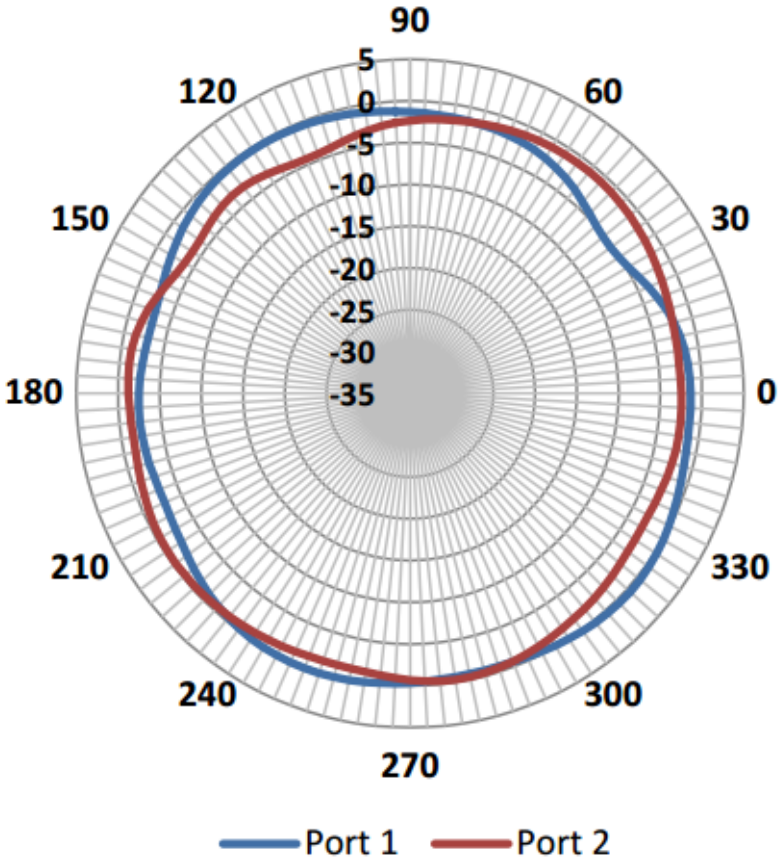

Figure 176: 2.46 GHz Antenna Radiation Patterns-Vertical Plane

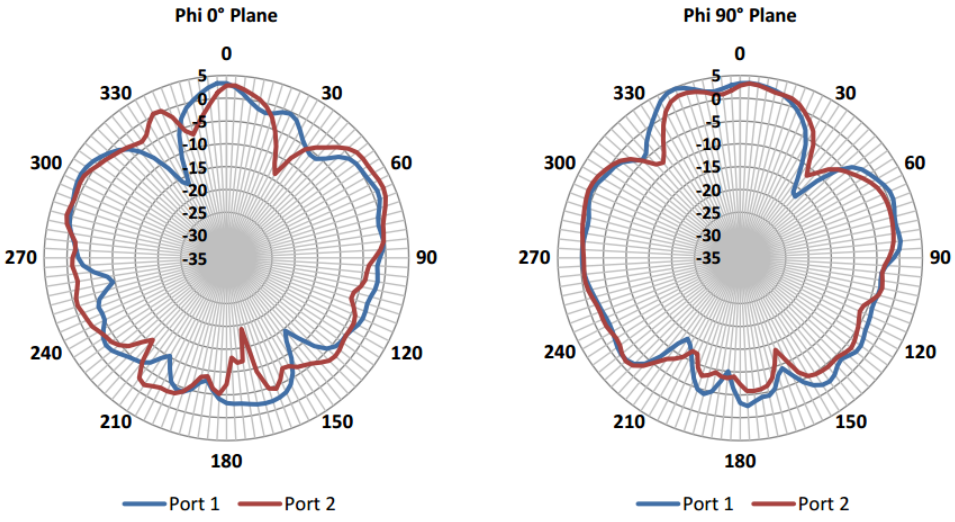

Figure 177: 4.9 GHz Antenna Radiation Pattern-Horizontal Plane

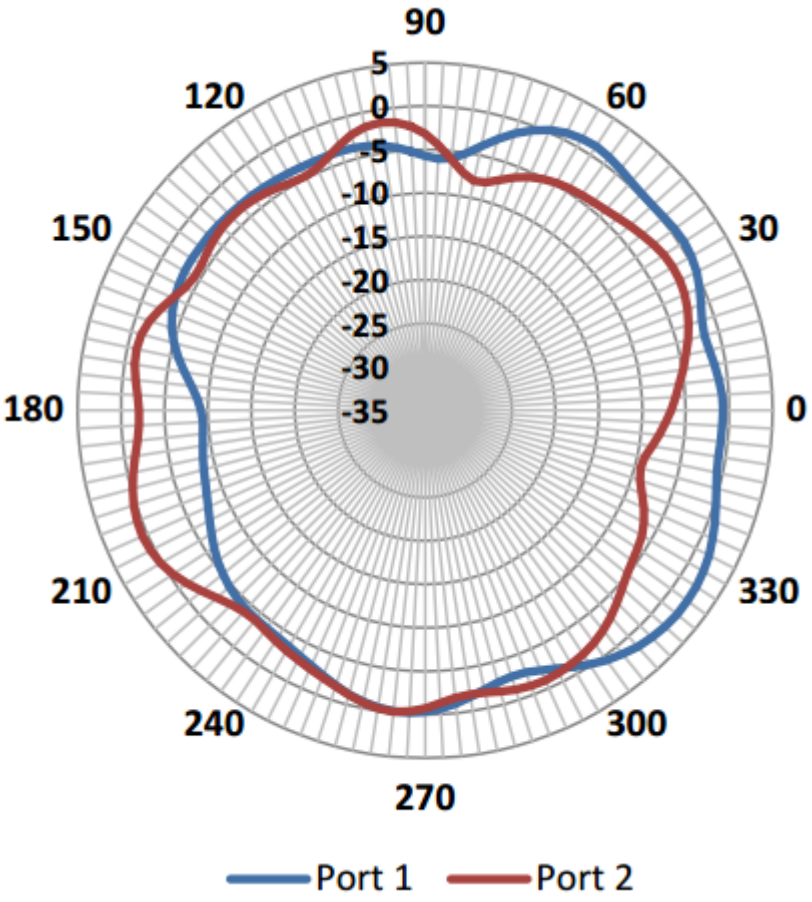

Figure 178: 4.9 GHz Antenna Radiation Patterns-Vertical Plane

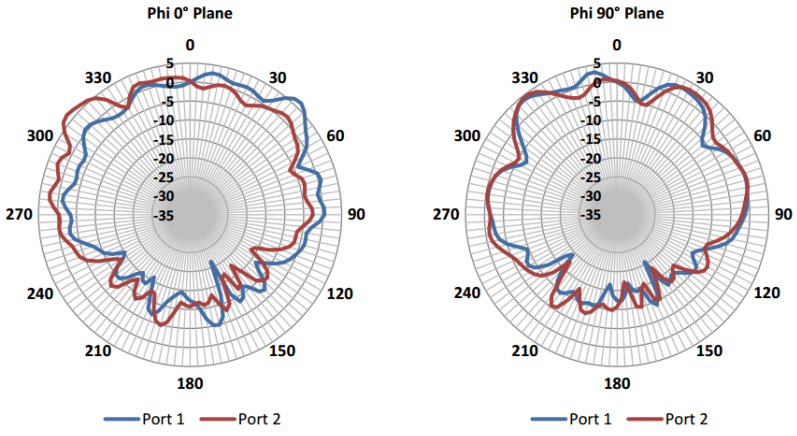

Figure 179: 5.55 GHz Antenna Radiation Pattern-Horizontal Plane

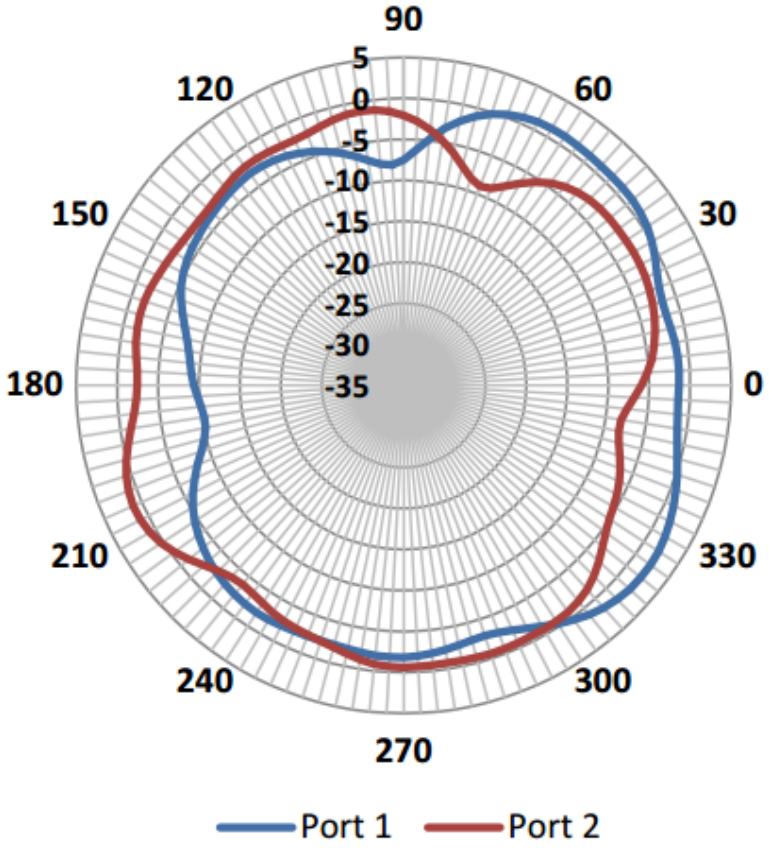

Figure 180: 5.55 GHz Antenna Radiation Patterns-Vertical Plane

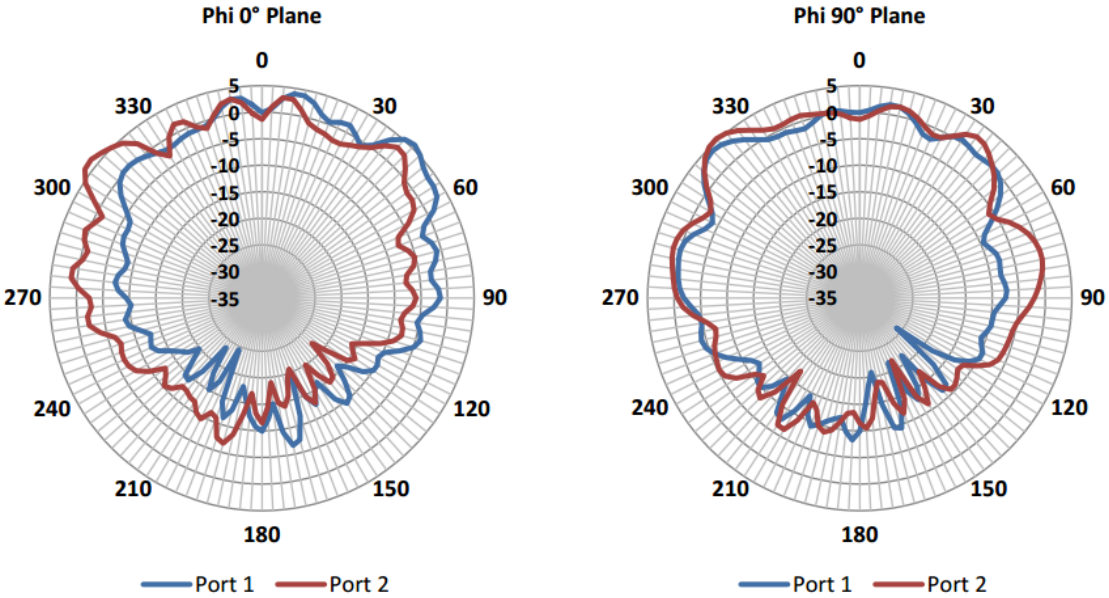

Figure 181: 5.9 GHz Antenna Radiation Pattern-Horizontal Plane

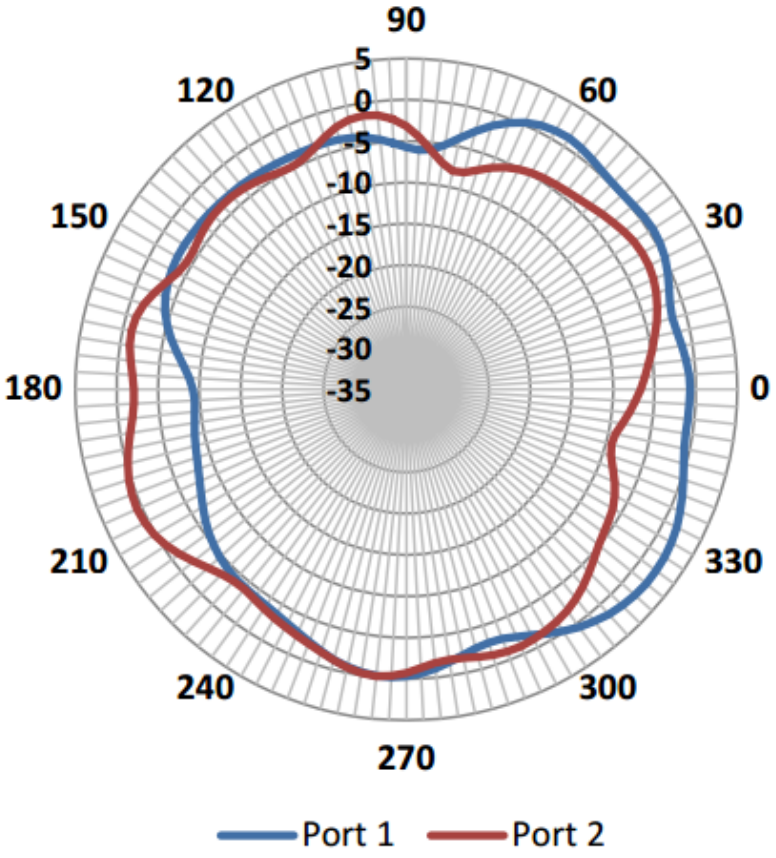

Figure 182: 5.9 GHz Antenna Radiation Patterns-Vertical Plane

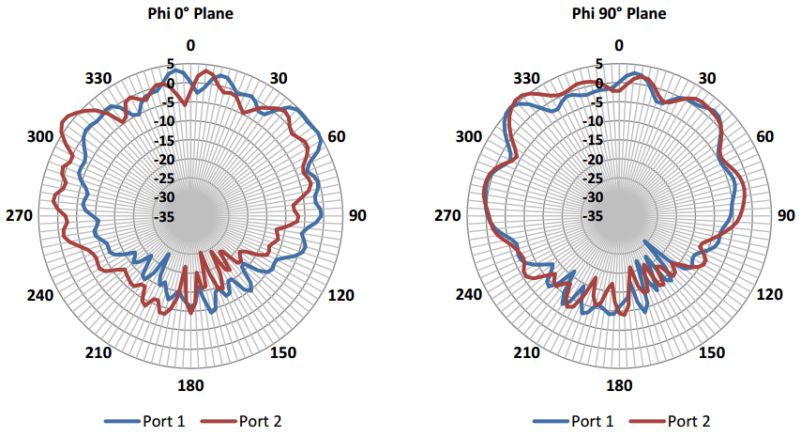

Environmental and Operational Specifications

Table 47: Environmental and Operational Specifications for the Cisco ANT-2-WLAN-D-O Antenna

Specification	Description
Operating temperature range	-40 to 176°F (-40 to 80°C)
Storage temperature range	-40 to 185°F (-40 to 85°C)
Altitude	15,000 feet. (4.5 km)
Humidity	5 to 95%
Vibration, Shock, Thermal, Corrosion, Seismic	Outdoor IP67. Tested to a variety of appropriate industrial, vehicular, transportation, and mil-spec standards.

Mechanical Specifications

Table 48: Mechanical Specifications for the Cisco ANT-2-WLAN-D-O Antenna

Specification	Description
Mount style	Roof mount, bulkhead
Location	Outdoor
Connector	Reverse Polarity TNC (RP-TNC) plug
Cable type	RG-58
Cable length	2 foot. (61 cm)
Dimensions	5.0 in. (12.7 cm) diameter, 1.5 in. (3.9 cm) height
Weight	0.584 lbs (0.265 kg)
IP rating	IP67
Radome	Polycarbonate, UV resistant, black
Material substance compliance	ROHS compliant

Power Specifications

Table 49: Power Specifications for the Cisco ANT-2-WLAN-D-O Antenna

Specification	Description
Nominal Impedance	50 ohms
Maximum input power per port	25 watts

General Safety Precautions

Warning This warning symbol means danger. You are in a situation that could cause bodily injury. Before you work on any equipment, be aware of the hazards involved with electrical circuitry and be familiar with standard practices for preventing accidents. Use the statement number provided at the end of each warning to locate its translation in the translated safety warnings that accompanied this device. **Statement 1071**

Warning Do not work on the system or connect or disconnect cables during periods of lightning activity. **Statement 1001**

Warning Do not locate the outdoor antenna near overhead power lines or other electric light or power circuits, or where it can come into contact with such circuits. When installing the antenna, take extreme care not to come into contact with such circuits, as they may cause serious injury or death. For proper installation and grounding of the antenna, please refer to national and local codes (for example, U.S.:NFPA 70, National Electrical Code, Article 810, Canada:Canadian Electrical Code, Section 54). **Statement 1052**

Warning In order to comply with FCC radio frequency (RF) exposure limits, antennas should be located at a minimum of 7.9 inches (20 cm) or more from the body of all persons. **Statement 332**

Note For your safety, and to help you achieve a good installation, please read and follow these safety precautions.

Mast Mounted or Building Mounted Installations

The following instructions are common to most mast mounted or building mounted installations. For specific installation instructions for each antenna, see the antenna data-sheet and the router hardware installation guide.

- Find someone to help you—installing an antenna is often a two-person job.

- Select your installation site with safety, as well as performance, in mind. Remember that electric power lines and phone lines look alike. For your safety, assume that any overhead line can kill you.
- Contact your electric power company. Tell them your plans and ask them to come look at your proposed installation.
- Do not use a metal ladder.
- Do not work on a wet or windy day.
- Do dress properly—wear shoes with rubber soles and heels, rubber gloves, and a long-sleeved shirt or jacket.
- If the assembly starts to drop, move away from it and let it fall. Because the antenna, mast, cable, and metal guy wires are all excellent conductors of electrical current, even the slightest touch of any of these parts to a power line completes an electrical path through the antenna and the installer.
- If any part of the antenna system should come in contact with a power line, do not touch it or try to remove it yourself. Call your local power company to have it removed safely.
- If an accident should occur with the power lines, call for qualified emergency help immediately.
- Assemble your new antenna on the ground or a level surface at the installation site.
- Connect its coaxial cable while you are on the ground and attach the antenna to the mast.
- Ensure that the mast does not fall as you raise or remove it. Use a durable non-conductive rope secured at each two foot level as the mast is raised. Have an assistant tend the rope, ready to pull the mast clear of any hazards (such as power lines) should it begin to fall.
- Use the mounting bracket provided with the antenna.
- If the installation will use guy wires:
    - Install guy anchor bolts.
    - Estimate the length of guy wire and cut it before raising the mast.
    - Attach guy wires to a mast using guy rings.
    - In the case of a guyed (tall, thin mast) installation, you must have at least one assistant to hold the mast upright while the guy wires are attached and tightened to the anchor bolts.
- Attach a “DANGER” label at eye level on the mast.
- Install ground rods to remove any static electricity buildup and connect a ground wire to the mast and ground rod. Use ground rods designed for that purpose, not a spare piece of pipe.

Unused Antenna Ports

Port plugs must be installed in any unused antenna ports.

The weatherproof caps on the connectors protect the router interior from environmental elements including water, heat, cold, and dust. They are installed on unused ports before the router is shipped.

When you install a new antenna in a port with an N-connector:

- Chassis-mounted antennas—Remove the weather proof cap before installing a chassis-mounted antenna.

- External antennas—Remove weatherproof cap, then connect the supported Cisco cable to the connector.

Guidelines to Achieving Optimal RF and Antenna Performance

Antennas are a critical component of a wireless communication system. Selecting a suitable antenna, an optimal antenna location, or antenna site is essential for optimum performance of a wireless links.

This section covers general tips for optimizing RF performance of indoor and outdoor terrestrial radio systems in the 400-7125 MHz frequency range. Examples of terrestrial radio systems include 4G LTE, 5G NR, Wi-Fi, LoRa, LR-WPAN and similar. In this context GPS SPS would not be considered a terrestrial system as the signal is received from space, not from another terrestrial site.

Because the antenna transmits and receives radio signals over the air, overall RF performance of the link is susceptible to RF obstructions and common sources of RF interference that can reduce throughput and range of the system.

Follow these guidelines to optimize performance. When in doubt, consult a qualified RF professional, and check with your solution partner for specific recommendations.

Antenna Model Selection and Performance

Consider the following when planning your installation:

- When selecting the antenna, ensure that it covers the frequency ranges or frequency bands of interest, and that it has good RF parameters such as antenna efficiency, VSWR and suitable radiation pattern for every frequency range that your application will use with this antenna.
- Antenna pattern is important. Omni-directional antennas have lower gain, but allow communicating to devices in all azimuth directions. Directional antennas concentrate the beam in a specific direction, making them ideal for point to point communication.
- When a system has multiple RF ports for receive and / or transmit, as is the case for 4G LTE , 5G NR or Wi-Fi, it is highly recommended to populate all the RF ports with suitable antennas to take advantage of MIMO, rather than rely on a single port or single antenna to save on cost. Please see the MIMO section for a detailed description of MIMO benefits.
- For RF systems that support multiple RF ports and multiple RF standards such as LTE, Wi-Fi, and GPS: consider using a multi-element antenna that integrates multiple antennas under the same radome (cover). Doing so may reduce cost compared to deploying and mounting a discrete single port antenna for every RF port.
- For communication between fixed infrastructure devices, such as mesh nodes or a point-to-point backhaul link, each device should have an antenna with the same polarization. If communicating with mobile devices that might be randomly oriented, consider dual-polarized antennas, such as those with both vertical and horizontal or slant +45° and -45° polarized elements.

Antenna Environmental Specifications

The selected antenna must have suitable mechanical and environmental specifications for the environment where it will be deployed. For example, shock and vibration specifications for transportation, corrosion resistant construction for marine and oil and gas industries, or IP (ingress protection) rating for outdoor deployment. Indoor antennas are typically not suitable for harsh industrial environments. Please check with your system integrator for environmental requirements for your application.

Antenna Accessories and Mounting

Consider the following when planning your installation:

- Carefully consider what type of other RF accessories, besides antenna, such as RF cables, lightning arrestors or RF adapters may be required in your installations. It is best to minimize long RF cable runs due to RF signal losses in the cable. Thinner RF cables have more RF loss , thicker cables are less flexible and more expensive.
- Carefully consider how the antenna will be physically mounted, as this may affect antenna selection. For example, a stud mount mechanical mounting design is a better fit for mounting on top of an electrical cabinet than a mast mount antenna.
- For outdoor deployments, follow installation instructions for the antenna. It is good practice to keep protective covers on the radio's RF ports and any antenna or accessory RF ports until the moment the interfaces are mated. This reduces chances of contamination, trapping water or condensation inside the connector, or accidental damage to RF interfaces.

MIMO Performance and Arrays

MIMO systems deliver benefits of higher SNR, higher reliability and higher throughput compared to single antenna systems. In more technical terms, MIMO delivers array gain, diversity gain and multiplexing gain compared to single antenna.

- Array gain — Improvement in SNR (signal to noise ratio) by coherently combining signals from multiple antennas. For example, increasing SNR through beamforming techniques.
- Diversity gain — Improvement in reliability by mitigating deep fading or strong destructive EM wave interference. For example, in a two-antenna system, if one antenna is experiencing deep fading due to an EM destructive null at its location at a given instant, the other antenna is unlikely to have a null at the same instant, and the combined SNR stays at a reliable level. In contrast, a single antenna would see SNR oscillating between good SNR and very poor SNR and reliability would degrade.
- Multiplexing gain — Increase in system capacity or throughput by sending independent data over multiple spatial streams simultaneously. The number of streams cannot be more than the number of antennas. For example, to support three spatial streams, a minimum of three antennas is required. Often there may be additional antennas for diversity or redundancy, such as in the case of 4x4:3, or 4x4 MIMO with 3 spatial streams.

If deploying multiple single-element antennas for a MIMO system in an array, ensure sufficient spacing between the antennas. Omnidirectional elements should generally be at least one wavelength apart at the lowest operating frequency.

Consider the following:

- For Wi-Fi systems operating in the 2.4, 5, and/or 6 GHz bands, space elements at least 5 inches (12.5 cm) apart.
- For 4G LTE and 5G systems with the lowest operating frequency of 617 MHz , space elements at least 20 inches (50 cm) apart.
- Note that spacing between elements inside multi-element MIMO antennas is often less than one wavelength. However multi-element antennas are engineered with MIMO performance in mind, by providing antenna diversity through pattern, polarization, and isolation between MIMO elements.

Antenna siting and location

Consider the following when planning your installation:

- Plan antenna location ahead of time. Ideal location for an antenna is in LOS (line of sight) of the counterpart that it is trying to communicate with. Under LOS conditions the signals propagate directly between the two communication nodes, without relying on signal bouncing off a wall or other structure to reach the counterpart. This is sometimes not possible to achieve in practice, but it is a useful goal to keep in mind when optimizing antenna location.
- While it is good to keep RF cables short, it is most desirable for an antenna to be in the best location it can be to provide the desired coverage.
- For large deployments involving multiple units communicating with each other across a complex urban or industrial landscape, consider running an RF propagation modeling study to predict approximate simulated coverage maps and determine initial placement of the units. A propagation study may help reduce overall deployment cost by discovering and mitigating issues with RF coverage before the infrastructure is physically installed.
- Keep the antenna away from metal obstructions such as heating and air-conditioning ducts, large ceiling trusses, building superstructures, and major power cabling runs. One exception is if the antenna is designed to be mounted on a ground plane. If mounting on a ground plane, mount the antenna on a flat metal surface away from adjacent obstructions.
- It is strongly recommended not to install antennas directly on the router or access point (AP), unless the router or AP is specifically engineered to directly mount the antennas. Products that are engineered for direct mounting of antennas specifically address each of the below issues.
- Reasons to mount antennas away from the router include:
  - Router location may not be optimal location for antenna to communicate with the counterpart wirelessly, so router and antenna may need to be in different locations.
  - Router may have a clutter of Ethernet cable and power cables around it, which will obstruct antenna signal.
  - A number of routers, such as the IR1835, are modular. They have plug-in RF modules for Wi-Fi , 4G LTE or 5G NR such as WP-WIFI6, P-LTEAP18-GL, P-5GS6-GL. These modules have RF connectors spaced close together, and while it is mechanically possible to install four or five antennas directly attached, this will result in significant degradation to RF performance of antennas due to mutual de-tuning between closely spaced antennas. It is strongly recommended to install antennas away from the chassis in modular cases.
- If installing an antenna indoors, consider that the density and electromagnetic properties of the materials used in the building construction determines the number of walls the signal can pass through and still maintain adequate coverage.
  - Paper and vinyl walls have very little effect on signal penetration.
  - Solid and pre-cast concrete walls limit signal penetration to one or two walls without degrading coverage.
  - Concrete and wood block walls limit signal penetration to three or four walls.
  - A signal can penetrate five or six walls constructed of drywall or wood.
  - A thick metal wall causes signals to reflect off, causing poor penetration.

- A chain link fence or wire mesh spaced between 1 and 1 1/2 in. (2.5 and 3.8 cm) acts as a harmonic reflector that blocks a 2.4-GHz radio signal.
- Install the antenna away from microwave ovens and 2-GHz cordless phones. These products can cause signal interference because they operate in the same frequency range as the device your antenna is connected to.

Installing the Antenna

The antenna installation includes the following procedures:

Contents of the Antenna Kit

The antenna kit contains:

- 1 x Cisco ANT-2-WLAN-D-O antenna

Tools and Equipment Required

In addition to the parts included in the antenna kit described in this section, you must provide the following tool to install the antenna on the router:

- Open-ended wrench
- Electric drill

Note This list does not include the tools and equipment required to assemble and erect the tower, mast, or other structure you intend to mount your antenna on.

Mounting the Antenna

Note A clean, flat surface at least 15 x 15 cm (6 x 6 in.) in area is required for mounting the antenna.

Follow these instructions to mount the antenna:

1. Mark the desired location where you plan to mount the antenna and create a hole through the surface The diameter of the hole must be at least 0.75 in. (1.91 cm).
2. Thread the cables through the hole and insert the aluminum stud on the underside of the antenna into the hole. Ensure that the foam gasket on the underside of the antenna sits flush against the mounting surface.
3. Inside the vehicle, place the rubber sealing washer around the stud. Then place the metal washer and the metal nut onto the stud.
4. Tighten the nut.

Connecting the Antenna to the Router

To attach the router-end of the cable to your router, please see the respective hardware guide for your device.

Note Coaxial cable loses efficiency as the frequency increases, resulting in signal loss. The cable should be kept as short as possible because cable length also determines the amount of signal loss—the longer the cable length or run, the greater the loss).

Communications, Services, and Additional Information

- To receive timely, relevant information from Cisco, sign up at Cisco Profile Manager.
- To get the business impact you're looking for with the technologies that matter, visit Cisco Services.
- To submit a service request, visit Cisco Support.
- To discover and browse secure, validated enterprise-class apps, products, solutions, and services, visit Cisco DevNet.
- To obtain general networking, training, and certification titles, visit Cisco Press.
- To find warranty information for a specific product or product family, access Cisco Warranty Finder.

Cisco Bug Search Tool

Cisco Bug Search Tool (BST) is a web-based tool that acts as a gateway to the Cisco bug tracking system that maintains a comprehensive list of defects and vulnerabilities in Cisco products and software. BST provides you with detailed defect information about your products and software.

Documentation Feedback

To provide feedback about Cisco technical documentation, use the feedback form available in the right pane of every online document.

Cisco Support Community

Cisco Support Community is a forum for you to ask and answer questions, share suggestions, and collaborate with your peers. Join the forum at https://supportforums.cisco.com/index.jspa.

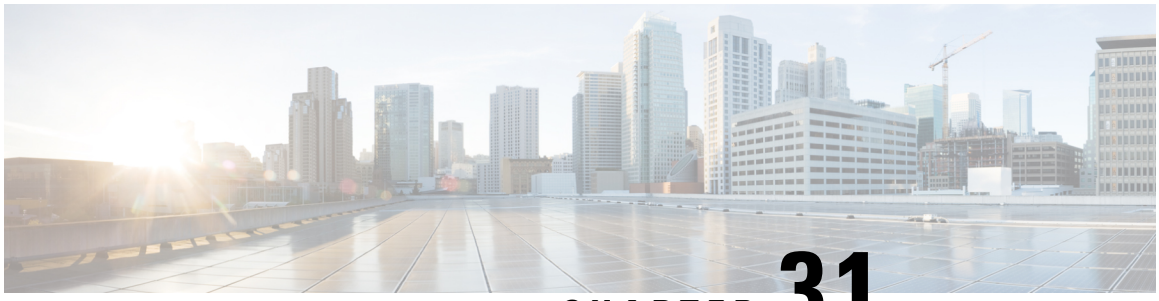

CHAPTER 31

Cisco Cellular and GPS 3-in-1 Vehicle Mount and Fixed Infrastructure Antenna (ANT-3-4G2G1-O)

This chapter contains the following:

- Overview, on page 519
- Antenna Features, on page 519
- Antenna Model, on page 520
- Antenna Assembly, on page 520
- Technical Specifications, on page 521
- Antenna Radiation Patterns, on page 524
- General Safety Precautions, on page 526
- Guidelines to Achieving Optimal RF and Antenna Performance, on page 528
- Installing the Antenna, on page 531
- Communications, Services, and Additional Information, on page 532

Overview

This section describes the technical specifications and installation instructions for the Cisco Cellular 3-in-1 Vehicle Mount and Fixed Infrastructure Antenna, hereafter referred to as the antenna. The antenna is a three port antenna with two elements designed to cover the 698-960, 1448-1511 and 1710-2700 MHz cellular bands and one GPS element. The antenna can be mounted on the roof of a vehicle or fixed structure. The antenna meets or exceeds a variety of environmental ruggedization specifications for transportation applications.

Note Read the information in the safety section before installing or replacing antennas.

Antenna Features

The antenna features:

- Three antenna elements within one radome: two cellular and one GPS
- Outdoor and transportation ready

- Roof mount installation
- Dual cellular elements supporting 698-960, 1448-1511 and 1710-2700 MHz
  - Omnidirectional, vertically polarized, MIMO
  - Integrated 2 foot cables with TNC male connectors
  - LTE elements are interchangeable, either one can be connected to Main or Aux
- Active GPS antenna has integrated 17 foot cable with SMA male connector

The antenna may require RF extension cables. A shorter 2 foot cable length was selected on LTE WAN to allow you to optimize LTE WAN performance and wireless range. If you require a cable length longer than 2 feet with the antenna, then select RF extension cables of appropriate length and type.

Thicker RF cables, such as LMR-600, LMR-400, or LMR-240 result in lower loss, higher RF performance and longer range of wireless network than thinner cables such as LMR-195, LMR-200. The trade-off is that thicker cables are more difficult to bend and route.

For optimal performance, the length of thin cables needs to be kept as short as possible. For example, 2 foot and 10 foot lengths of LMR-195 cable at 2700 MHz frequency would have losses of 0.5dB and 2.3dB respectively. In this example at 2700 MHz the area covered by the wireless system with the 10 foot cable is reduced by 34% compared to 2 foot cable. Radius of communication is degraded by 20% in 10 foot vs 2 foot case.

Antenna Model

Antenna Model	Description
ANT-3-4G2G1-O	Cisco Cellular and GPS 3-in-1 Vehicle Mount and Fixed Infrastructure Antenna

Antenna Assembly

Figure 183: Cisco ANT-3-4G2G1-O Antenna



Note GPS cable (center) is 17 feet. It is shown shorter in the Figure for illustration purposes.

Figure 184: Cisco ANT-3-4G2G1-O Mechanical Details

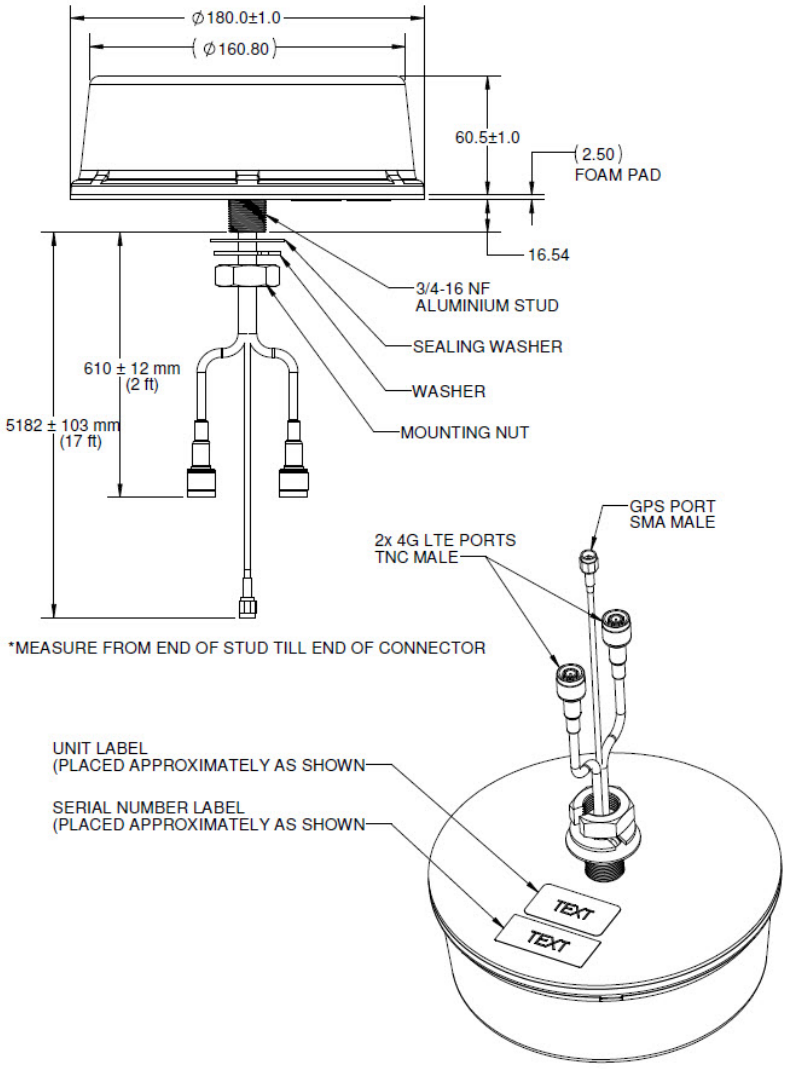

Note All dimensions are in millimeters [inches] unless explicitly stated otherwise in the drawing.

Technical Specifications

The following tables detail the antenna's specifications.

Table 50: Radio Frequency Specifications

Specification	Description
Antenna type	Dual element, omnidirectional, 2x2 MIMO
Frequency	698 to 960 MHz 1448 to1511 MHz 1710 to 2700 MHz
Nominal impedance	50 ohms
VSWR	2.1:1 maximum at 698 to 960 MHz 2.4:1 maximum at 1448 MHz edge, 2.2:1 typical 1455 to 1511 MHz 2.0:1 maximum at 1710 to 2700 MHz
Gain	The gain values (dBi) for each frequency range are: 2.6 dBi typical, 3.8 dBi maximum-698 to 960 MHz 3.8 dBi typical, 4.3 dBi maximum-1448 to 1551 MHz 4.6 dBi typical, 5.5 dBi maximum-1710 to 2700 MHz
Isolation cellular to cellular (Main to Aux)	14 dB minimum-698 to 960 MHz 20 dB minimum-1448 to 1551 MHz 20 dB minimum-1710 to 2700 MHz
Polarization	Linear, Vertical
Efficiency	Antennas were designed and tested to high RF efficiency in all supported cellular bands. Detailed technical specifications can be obtained through your Cisco authorized partner or Cisco account representative.
Radiation Pattern	Omnidirectional

Table 51: GPS Antenna Radio Frequency Specifications

Specification	Description
Antenna type	Patch
Frequency	1575.42 ± 1 MHz (GPS L1)
Nominal impedance	50 ohms
VSWR	2.0:1 maximum
Amplifier Gain	27 dB
DC current	20 mA maximum

Specification	Description
DC voltage	2.7 to 12 V
Isolation, cellular to GPS	10 dB minimum. 1574.42 to 1576.42 MHz. Cellular coexistence tested over multiple bands, GPS includes coexistence filters.
Polarization	RHCP
Radiation pattern	Hemispherical

Table 52: Environmental Specifications

Specification	Description
Operating temperature range	-40 to 158°F (-40 to 70°C)
Storage temperature range	-40 to 185°F (-40 to 85°C)
Altitude	15,000 feet. (4.5 km)
Humidity	5 to 95%
Vibration, Shock, Thermal, Corrosion, Seismic	Outdoor IP67. Tested to a variety of appropriate industrial, vehicular, transportation, and mil-spec standards.

Table 53: Mechanical Specifications

Specification	Description
Mount style	Roof mount, bulkhead
Location	Outdoor
Connector	Cellular – TNC male GPS – SMA male
Cable type	Cellular – RG-58 GPS – RG-174
Cable length	Cellular – 2 foot. (61 cm) GPS – 17 foot. (518 cm)
Dimensions	7.1 in. (18.0 cm) diameter, 2.4 in. (6.05 cm) height
Weight	1.48 lbs (0.67 kg)
IP rating	IP67
Radome	Polycarbonate, UV resistant, black

Specification	Description
Material substance compliance	ROHS compliant

Table 54: Power Specifications

Specification	Description
Nominal Impedance	50 ohms
Maximum input power per port	5 watts

Antenna Radiation Patterns

In the following graphics of the radiation patterns, the blue line denotes Port 1 and the red line denotes Port 2.

Figure 185: 698 MHz Cellular Antenna Radiation Patterns

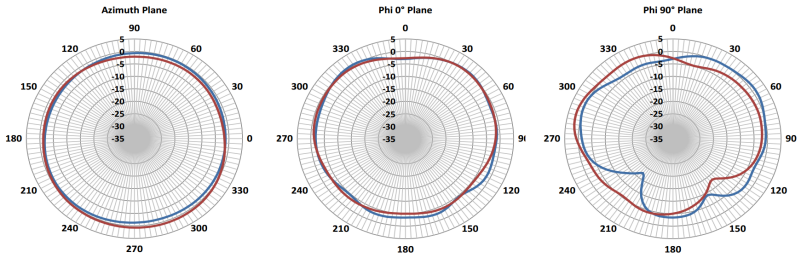

Figure 186: 880 MHz Cellular Antenna Radiation Patterns

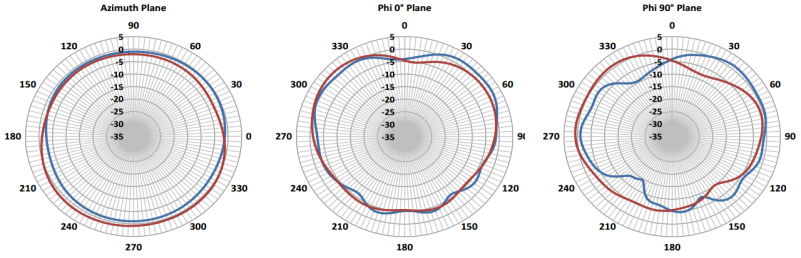

Figure 187: 960 MHz Cellular Antenna Radiation Patterns

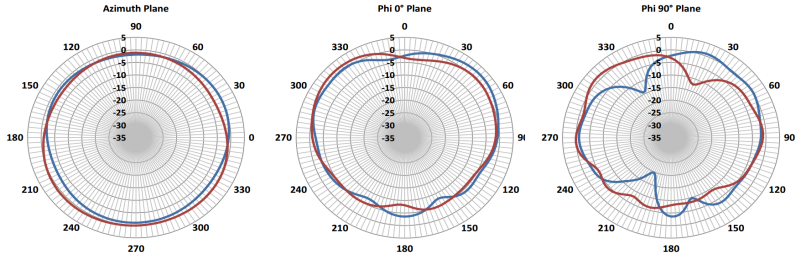

Figure 188: 1470 MHz Cellular Antenna Radiation Patterns

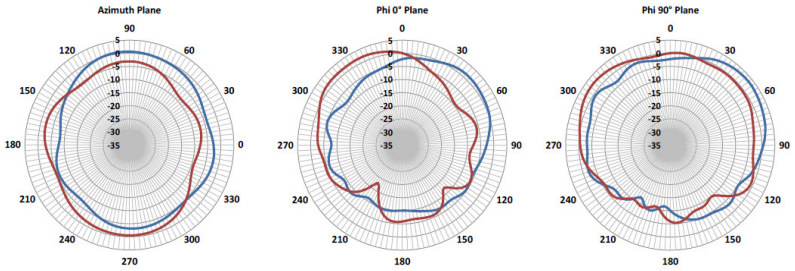

Figure 189: 1710 MHz Cellular Antenna Radiation Patterns

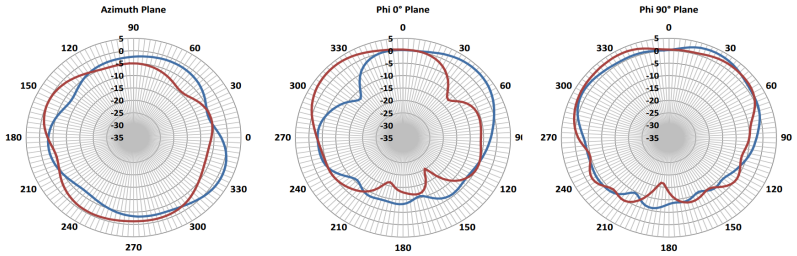

Figure 190: 2170 MHz Cellular Antenna Radiation Patterns

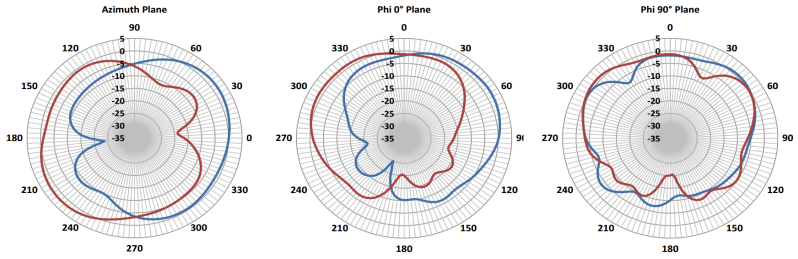

Figure 191: 2700 MHz Cellular Antenna Radiation Patterns

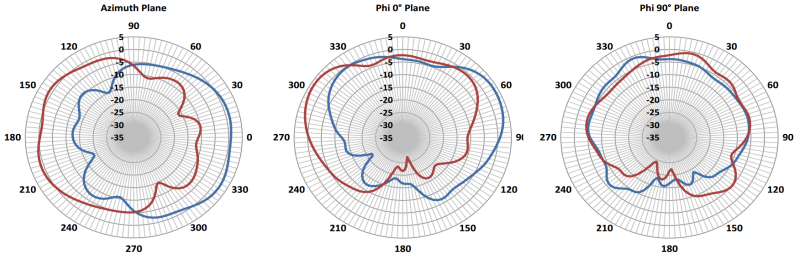

Figure 192: 1575 MHz GPS Antenna Radiation Patterns

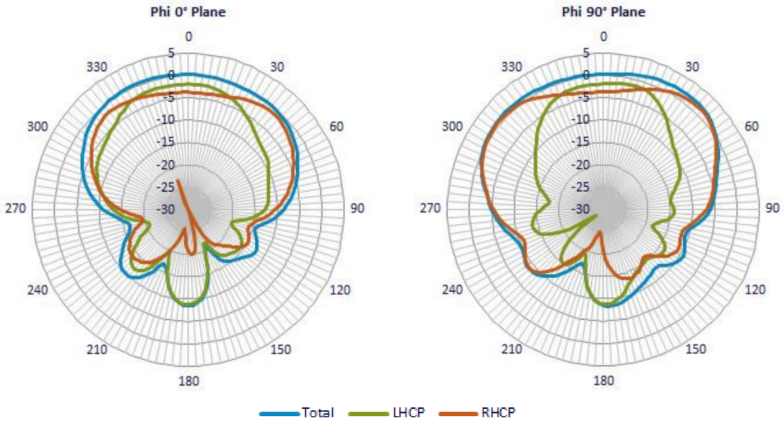

General Safety Precautions

Warning This warning symbol means danger. You are in a situation that could cause bodily injury. Before you work on any equipment, be aware of the hazards involved with electrical circuitry and be familiar with standard practices for preventing accidents. Use the statement number provided at the end of each warning to locate its translation in the translated safety warnings that accompanied this device. **Statement 1071**

Warning Do not work on the system or connect or disconnect cables during periods of lightning activity. **Statement 1001**

Warning Do not locate the outdoor antenna near overhead power lines or other electric light or power circuits, or where it can come into contact with such circuits. When installing the antenna, take extreme care not to come into contact with such circuits, as they may cause serious injury or death. For proper installation and grounding of the antenna, please refer to national and local codes (for example, U.S.:NFPA 70, National Electrical Code, Article 810, Canada:Canadian Electrical Code, Section 54). **Statement 1052**

Warning In order to comply with FCC radio frequency (RF) exposure limits, antennas should be located at a minimum of 7.9 inches (20 cm) or more from the body of all persons. **Statement 332**

Note For your safety, and to help you achieve a good installation, please read and follow these safety precautions.

Mast Mounted or Building Mounted Installations

The following instructions are common to most mast mounted or building mounted installations. For specific installation instructions for each antenna, see the antenna data-sheet and the router hardware installation guide.

- Find someone to help you—installing an antenna is often a two-person job.
- Select your installation site with safety, as well as performance, in mind. Remember that electric power lines and phone lines look alike. For your safety, assume that any overhead line can kill you.
- Contact your electric power company. Tell them your plans and ask them to come look at your proposed installation.
- Do not use a metal ladder.
- Do not work on a wet or windy day.
- Do dress properly—wear shoes with rubber soles and heels, rubber gloves, and a long-sleeved shirt or jacket.
- If the assembly starts to drop, move away from it and let it fall. Because the antenna, mast, cable, and metal guy wires are all excellent conductors of electrical current, even the slightest touch of any of these parts to a power line completes an electrical path through the antenna and the installer.
- If any part of the antenna system should come in contact with a power line, do not touch it or try to remove it yourself. Call your local power company to have it removed safely.
- If an accident should occur with the power lines, call for qualified emergency help immediately.
- Assemble your new antenna on the ground or a level surface at the installation site.
- Connect its coaxial cable while you are on the ground and attach the antenna to the mast.
- Ensure that the mast does not fall as you raise or remove it. Use a durable non-conductive rope secured at each two foot level as the mast is raised. Have an assistant tend the rope, ready to pull the mast clear of any hazards (such as power lines) should it begin to fall.
- Use the mounting bracket provided with the antenna.
- If the installation will use guy wires:
    - Install guy anchor bolts.
    - Estimate the length of guy wire and cut it before raising the mast.
    - Attach guy wires to a mast using guy rings.
    - In the case of a guyed (tall, thin mast) installation, you must have at least one assistant to hold the mast upright while the guy wires are attached and tightened to the anchor bolts.
- Attach a “DANGER” label at eye level on the mast.
- Install ground rods to remove any static electricity buildup and connect a ground wire to the mast and ground rod. Use ground rods designed for that purpose, not a spare piece of pipe.

Unused Antenna Ports

Port plugs must be installed in any unused antenna ports.

The weatherproof caps on the connectors protect the router interior from environmental elements including water, heat, cold, and dust. They are installed on unused ports before the router is shipped.

When you install a new antenna in a port with an N-connector:

- Chassis-mounted antennas—Remove the weather proof cap before installing a chassis-mounted antenna.
- External antennas—Remove weatherproof cap, then connect the supported Cisco cable to the connector.

Guidelines to Achieving Optimal RF and Antenna Performance

Antennas are a critical component of a wireless communication system. Selecting a suitable antenna, an optimal antenna location, or antenna site is essential for optimum performance of a wireless links.

This section covers general tips for optimizing RF performance of indoor and outdoor terrestrial radio systems in the 400-7125 MHz frequency range. Examples of terrestrial radio systems include 4G LTE, 5G NR, Wi-Fi, LoRa, LR-WPAN and similar. In this context GPS SPS would not be considered a terrestrial system as the signal is received from space, not from another terrestrial site.

Because the antenna transmits and receives radio signals over the air, overall RF performance of the link is susceptible to RF obstructions and common sources of RF interference that can reduce throughput and range of the system.

Follow these guidelines to optimize performance. When in doubt, consult a qualified RF professional, and check with your solution partner for specific recommendations.

Antenna Model Selection and Performance

Consider the following when planning your installation:

- When selecting the antenna, ensure that it covers the frequency ranges or frequency bands of interest, and that it has good RF parameters such as antenna efficiency, VSWR and suitable radiation pattern for every frequency range that your application will use with this antenna.
- Antenna pattern is important. Omni-directional antennas have lower gain, but allow communicating to devices in all azimuth directions. Directional antennas concentrate the beam in a specific direction, making them ideal for point to point communication.
- When a system has multiple RF ports for receive and / or transmit, as is the case for 4G LTE , 5G NR or Wi-Fi, it is highly recommended to populate all the RF ports with suitable antennas to take advantage of MIMO, rather than rely on a single port or single antenna to save on cost. Please see the MIMO section for a detailed description of MIMO benefits.
- For RF systems that support multiple RF ports and multiple RF standards such as LTE, Wi-Fi, and GPS: consider using a multi-element antenna that integrates multiple antennas under the same radome (cover). Doing so may reduce cost compared to deploying and mounting a discrete single port antenna for every RF port.
- For communication between fixed infrastructure devices, such as mesh nodes or a point-to-point backhaul link, each device should have an antenna with the same polarization. If communicating with mobile devices that might be randomly oriented, consider dual-polarized antennas, such as those with both vertical and horizontal or slant +45° and -45° polarized elements.

Antenna Environmental Specifications

The selected antenna must have suitable mechanical and environmental specifications for the environment where it will be deployed. For example, shock and vibration specifications for transportation, corrosion resistant construction for marine and oil and gas industries, or IP (ingress protection) rating for outdoor deployment. Indoor antennas are typically not suitable for harsh industrial environments. Please check with your system integrator for environmental requirements for your application.

Antenna Accessories and Mounting

Consider the following when planning your installation:

- Carefully consider what type of other RF accessories, besides antenna, such as RF cables, lightning arrestors or RF adapters may be required in your installations. It is best to minimize long RF cable runs due to RF signal losses in the cable. Thinner RF cables have more RF loss , thicker cables are less flexible and more expensive.
- Carefully consider how the antenna will be physically mounted, as this may affect antenna selection. For example, a stud mount mechanical mounting design is a better fit for mounting on top of an electrical cabinet than a mast mount antenna.
- For outdoor deployments, follow installation instructions for the antenna. It is good practice to keep protective covers on the radio's RF ports and any antenna or accessory RF ports until the moment the interfaces are mated. This reduces chances of contamination, trapping water or condensation inside the connector, or accidental damage to RF interfaces.

MIMO Performance and Arrays

MIMO systems deliver benefits of higher SNR, higher reliability and higher throughput compared to single antenna systems. In more technical terms, MIMO delivers array gain, diversity gain and multiplexing gain compared to single antenna.

- Array gain — Improvement in SNR (signal to noise ratio) by coherently combining signals from multiple antennas. For example, increasing SNR through beamforming techniques.
- Diversity gain — Improvement in reliability by mitigating deep fading or strong destructive EM wave interference. For example, in a two-antenna system, if one antenna is experiencing deep fading due to an EM destructive null at its location at a given instant, the other antenna is unlikely to have a null at the same instant, and the combined SNR stays at a reliable level. In contrast, a single antenna would see SNR oscillating between good SNR and very poor SNR and reliability would degrade.
- Multiplexing gain — Increase in system capacity or throughput by sending independent data over multiple spatial streams simultaneously. The number of streams cannot be more than the number of antennas. For example, to support three spatial streams, a minimum of three antennas is required. Often there may be additional antennas for diversity or redundancy, such as in the case of 4x4:3, or 4x4 MIMO with 3 spatial streams.

If deploying multiple single-element antennas for a MIMO system in an array, ensure sufficient spacing between the antennas. Omnidirectional elements should generally be at least one wavelength apart at the lowest operating frequency.

Consider the following:

- For Wi-Fi systems operating in the 2.4, 5, and/or 6 GHz bands, space elements at least 5 inches (12.5 cm) apart.

- For 4G LTE and 5G systems with the lowest operating frequency of 617 MHz , space elements at least 20 inches (50 cm) apart.
- Note that spacing between elements inside multi-element MIMO antennas is often less than one wavelength. However multi-element antennas are engineered with MIMO performance in mind, by providing antenna diversity through pattern, polarization, and isolation between MIMO elements.

Antenna siting and location

Consider the following when planning your installation:

- Plan antenna location ahead of time. Ideal location for an antenna is in LOS (line of sight) of the counterpart that it is trying to communicate with. Under LOS conditions the signals propagate directly between the two communication nodes, without relying on signal bouncing off a wall or other structure to reach the counterpart. This is sometimes not possible to achieve in practice, but it is a useful goal to keep in mind when optimizing antenna location.
- While it is good to keep RF cables short, it is most desirable for an antenna to be in the best location it can be to provide the desired coverage.
- For large deployments involving multiple units communicating with each other across a complex urban or industrial landscape, consider running an RF propagation modeling study to predict approximate simulated coverage maps and determine initial placement of the units. A propagation study may help reduce overall deployment cost by discovering and mitigating issues with RF coverage before the infrastructure is physically installed.
- Keep the antenna away from metal obstructions such as heating and air-conditioning ducts, large ceiling trusses, building superstructures, and major power cabling runs. One exception is if the antenna is designed to be mounted on a ground plane. If mounting on a ground plane, mount the antenna on a flat metal surface away from adjacent obstructions.
- It is strongly recommended not to install antennas directly on the router or access point (AP), unless the router or AP is specifically engineered to directly mount the antennas. Products that are engineered for direct mounting of antennas specifically address each of the below issues.
- Reasons to mount antennas away from the router include:
    - Router location may not be optimal location for antenna to communicate with the counterpart wirelessly, so router and antenna may need to be in different locations.
    - Router may have a clutter of Ethernet cable and power cables around it, which will obstruct antenna signal.
    - A number of routers, such as the IR1835, are modular. They have plug-in RF modules for Wi-Fi , 4G LTE or 5G NR such as WP-WIFI6, P-LTEAP18-GL, P-5GS6-GL. These modules have RF connectors spaced close together, and while it is mechanically possible to install four or five antennas directly attached, this will result in significant degradation to RF performance of antennas due to mutual de-tuning between closely spaced antennas. It is strongly recommended to install antennas away from the chassis in modular cases.
- If installing an antenna indoors, consider that the density and electromagnetic properties of the materials used in the building construction determines the number of walls the signal can pass through and still maintain adequate coverage.
    - Paper and vinyl walls have very little effect on signal penetration.

- Solid and pre-cast concrete walls limit signal penetration to one or two walls without degrading coverage.
- Concrete and wood block walls limit signal penetration to three or four walls.
- A signal can penetrate five or six walls constructed of drywall or wood.
- A thick metal wall causes signals to reflect off, causing poor penetration.
- A chain link fence or wire mesh spaced between 1 and 1 1/2 in. (2.5 and 3.8 cm) acts as a harmonic reflector that blocks a 2.4-GHz radio signal.
- Install the antenna away from microwave ovens and 2-GHz cordless phones. These products can cause signal interference because they operate in the same frequency range as the device your antenna is connected to.

Installing the Antenna

The antenna installation includes the following procedures:

Contents of the Antenna Kit

The antenna kit contains:

- 1 x Cisco ANT-3-4G2G1-O antenna

Tools and Equipment Required

In addition to the parts included in the antenna kit described in the previous section , you must provide the following tool to install the antenna on the router:

- Open-ended wrench
- Electric drill

Note This list does not include the tools and equipment required to assemble and erect the tower, mast, or other structure you intend to mount your antenna on.

Mounting the Antenna

Note A clean, flat surface at least 20 x 20 cm (8 x 8 in.) in area is required for mounting the antenna.

Follow these instructions to mount the antenna:

1. Mark the desired location where you plan to mount the antenna and create a hole through the surface The diameter of the hole must be at least 0.75 in. (1.91 cm).
2. Thread the cables through the hole and insert the aluminum stud on the underside of the antenna into the hole. Ensure that the foam gasket on the underside of the antenna sits flush against the mounting surface.
3. Inside the vehicle, place the rubber sealing washer around the stud. Then place the metal washer and the metal nut onto the stud.
4. Tighten the nut.

Connecting the Antenna to the Router

To attach the router-end of the cable to your router, please see the Hardware Installation Guide for your particular device.

Note Coaxial cable loses efficiency as the frequency increases, resulting in signal loss. The cable should be kept as short as possible because cable length also determines the amount of signal loss—the longer the cable length or run, the greater the loss).

Communications, Services, and Additional Information

- To receive timely, relevant information from Cisco, sign up at Cisco Profile Manager.
- To get the business impact you're looking for with the technologies that matter, visit Cisco Services.
- To submit a service request, visit Cisco Support.
- To discover and browse secure, validated enterprise-class apps, products, solutions, and services, visit Cisco DevNet.
- To obtain general networking, training, and certification titles, visit Cisco Press.
- To find warranty information for a specific product or product family, access Cisco Warranty Finder.

Cisco Bug Search Tool

Cisco Bug Search Tool (BST) is a web-based tool that acts as a gateway to the Cisco bug tracking system that maintains a comprehensive list of defects and vulnerabilities in Cisco products and software. BST provides you with detailed defect information about your products and software.

Documentation Feedback

To provide feedback about Cisco technical documentation, use the feedback form available in the right pane of every online document.

Cisco Support Community

Cisco Support Community is a forum for you to ask and answer questions, share suggestions, and collaborate with your peers. Join the forum at https://supportforums.cisco.com/index.jspa.

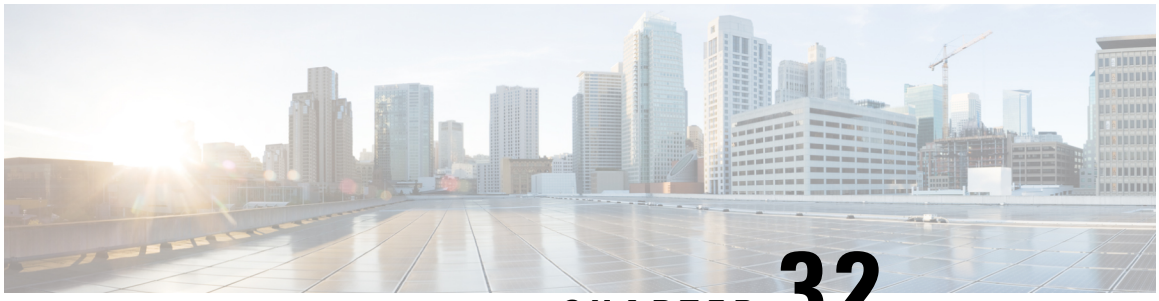

CHAPTER 32

Cisco Multiband Panel Outdoor 3G Antenna (ANT-3G-PNL-OUT-N)

This chapter contains the following:

- Overview, on page 535
- Technical Specifications, on page 535
- Contents of the Antenna Kit, on page 537
- General Safety Precautions, on page 538
- Guidelines to Achieving Optimal RF and Antenna Performance, on page 540
- Antenna Installation, on page 543
- Connecting the Lightning Arrestor, on page 548
- Connecting the Antenna to the Router, on page 548
- Communications, Services, and Additional Information, on page 548

Overview

The Multiband Panel Outdoor 3G antenna is designed to cover cellular 3G bands. This document provides the antenna specifications and mounting instructions.

Note Read the information in Safety Warnings before installing or replacing antennas.

This chapter covers the following topics:

Technical Specifications

The Multiband Panel Outdoor 3G directional panel antenna features the following:

- Flame retardant
- Low-profile housing
- Indoor and outdoors
- Adjustable mounting brackets

- Type N female connector

Figure 193: Multiband Panel Outdoor 3G Antenna



RF Specifications

Specification	Description
Frequency range	• 806 to 960 MHz • 1710 to 2170 MHz
Nominal gain	• 10 dBi (806 to 960 MHz) • 11 dBi (1710 to 2170 MHz)
3 dB horizontal beamwidth	• 40 degrees (806 to 960 MHz) • 30 degrees (1710 to 2170 MHz)
3 dB vertical beamwidth	• 52 degrees (806 to 960 MHz) • 66 degrees (1710 to 2170 MHz)
Polarization	Linear
Nominal impedance	50 ohms
Nominal VSWR	< 1.8:1
Front to back ratio	>/= 25
Radiation Pattern	Directional

Mechanical Specifications

Specification	Description
Type	Directional panel
Mount style	Pipe or wall mount, adjustable mount
Environment	Outdoor
Connector	Type N female
Antenna length (height)	14.5” x 1” (36.8 cm x 2.45 cm)
Weight	3.5 lbs (1.6 kg)
Dimensions (height x outside dimensions)	14.5” x 14.5” x 1.75” (340 x 340 x 30 mm)
Temperature Range (Operating)	-40 to 185-degrees F (-40 to 85-degrees C)
Storage temperature	-40 to 185-degrees F (-40 to 85-degrees C)
Maximum Power	20 watts
Radome material	UL94-V0 ASA radome

The Multiband Panel Outdoor 3G antenna has Azimuth radiation patterns:

Figure 194: Outdoor 3G Antenna Radiation Patterns

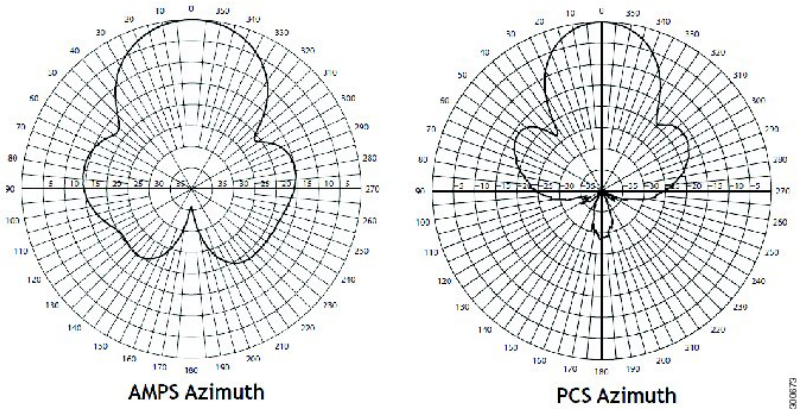

Contents of the Antenna Kit

The contents of the multi-purpose integrated antenna are listed in the following table:

Quantity	Description
1	Antenna-mount bracket
1	Elevation adjustable bracket

Quantity	Description
1	Azimuth adjustable bracket
4	1/4”-20x3/4 carriage bolt
6	1/4”-20 hex nut
6	1/4”-20 spring lock washer
6	1/4”-20 flat washer
2	Pipe clamps
ANT-4G-SR-OUT-TNC (1)	Multiband low-profile saucer outdoor 4G Antenna

General Safety Precautions

Warning This warning symbol means danger. You are in a situation that could cause bodily injury. Before you work on any equipment, be aware of the hazards involved with electrical circuitry and be familiar with standard practices for preventing accidents. Use the statement number provided at the end of each warning to locate its translation in the translated safety warnings that accompanied this device. **Statement 1071**

Warning Do not work on the system or connect or disconnect cables during periods of lightning activity. **Statement 1001**

Warning Do not locate the outdoor antenna near overhead power lines or other electric light or power circuits, or where it can come into contact with such circuits. When installing the antenna, take extreme care not to come into contact with such circuits, as they may cause serious injury or death. For proper installation and grounding of the antenna, please refer to national and local codes (for example, U.S.:NFPA 70, National Electrical Code, Article 810, Canada:Canadian Electrical Code, Section 54). **Statement 1052**

Warning In order to comply with FCC radio frequency (RF) exposure limits, antennas should be located at a minimum of 7.9 inches (20 cm) or more from the body of all persons. **Statement 332**

Note For your safety, and to help you achieve a good installation, please read and follow these safety precautions.

Mast Mounted or Building Mounted Installations

The following instructions are common to most mast mounted or building mounted installations. For specific installation instructions for each antenna, see the antenna data-sheet and the router hardware installation guide.

- Find someone to help you—installing an antenna is often a two-person job.
- Select your installation site with safety, as well as performance, in mind. Remember that electric power lines and phone lines look alike. For your safety, assume that any overhead line can kill you.
- Contact your electric power company. Tell them your plans and ask them to come look at your proposed installation.
- Do not use a metal ladder.
- Do not work on a wet or windy day.
- Do dress properly—wear shoes with rubber soles and heels, rubber gloves, and a long-sleeved shirt or jacket.
- If the assembly starts to drop, move away from it and let it fall. Because the antenna, mast, cable, and metal guy wires are all excellent conductors of electrical current, even the slightest touch of any of these parts to a power line completes an electrical path through the antenna and the installer.
- If any part of the antenna system should come in contact with a power line, do not touch it or try to remove it yourself. Call your local power company to have it removed safely.
- If an accident should occur with the power lines, call for qualified emergency help immediately.
- Assemble your new antenna on the ground or a level surface at the installation site.
- Connect its coaxial cable while you are on the ground and attach the antenna to the mast.
- Ensure that the mast does not fall as you raise or remove it. Use a durable non-conductive rope secured at each two foot level as the mast is raised. Have an assistant tend the rope, ready to pull the mast clear of any hazards (such as power lines) should it begin to fall.
- Use the mounting bracket provided with the antenna.
- If the installation will use guy wires:
    - Install guy anchor bolts.
    - Estimate the length of guy wire and cut it before raising the mast.
    - Attach guy wires to a mast using guy rings.
    - In the case of a guyed (tall, thin mast) installation, you must have at least one assistant to hold the mast upright while the guy wires are attached and tightened to the anchor bolts.
- Attach a “DANGER” label at eye level on the mast.
- Install ground rods to remove any static electricity buildup and connect a ground wire to the mast and ground rod. Use ground rods designed for that purpose, not a spare piece of pipe.

Unused Antenna Ports

Port plugs must be installed in any unused antenna ports.

The weatherproof caps on the connectors protect the router interior from environmental elements including water, heat, cold, and dust. They are installed on unused ports before the router is shipped.

When you install a new antenna in a port with an N-connector:

- Chassis-mounted antennas—Remove the weather proof cap before installing a chassis-mounted antenna.
- External antennas—Remove weatherproof cap, then connect the supported Cisco cable to the connector.

Guidelines to Achieving Optimal RF and Antenna Performance

Antennas are a critical component of a wireless communication system. Selecting a suitable antenna, an optimal antenna location, or antenna site is essential for optimum performance of a wireless links.

This section covers general tips for optimizing RF performance of indoor and outdoor terrestrial radio systems in the 400-7125 MHz frequency range. Examples of terrestrial radio systems include 4G LTE, 5G NR, Wi-Fi, LoRa, LR-WPAN and similar. In this context GPS SPS would not be considered a terrestrial system as the signal is received from space, not from another terrestrial site.

Because the antenna transmits and receives radio signals over the air, overall RF performance of the link is susceptible to RF obstructions and common sources of RF interference that can reduce throughput and range of the system.

Follow these guidelines to optimize performance. When in doubt, consult a qualified RF professional, and check with your solution partner for specific recommendations.

Antenna Model Selection and Performance

Consider the following when planning your installation:

- When selecting the antenna, ensure that it covers the frequency ranges or frequency bands of interest, and that it has good RF parameters such as antenna efficiency, VSWR and suitable radiation pattern for every frequency range that your application will use with this antenna.
- Antenna pattern is important. Omni-directional antennas have lower gain, but allow communicating to devices in all azimuth directions. Directional antennas concentrate the beam in a specific direction, making them ideal for point to point communication.
- When a system has multiple RF ports for receive and / or transmit, as is the case for 4G LTE , 5G NR or Wi-Fi, it is highly recommended to populate all the RF ports with suitable antennas to take advantage of MIMO, rather than rely on a single port or single antenna to save on cost. Please see the MIMO section for a detailed description of MIMO benefits.
- For RF systems that support multiple RF ports and multiple RF standards such as LTE, Wi-Fi, and GPS: consider using a multi-element antenna that integrates multiple antennas under the same radome (cover). Doing so may reduce cost compared to deploying and mounting a discrete single port antenna for every RF port.
- For communication between fixed infrastructure devices, such as mesh nodes or a point-to-point backhaul link, each device should have an antenna with the same polarization. If communicating with mobile devices that might be randomly oriented, consider dual-polarized antennas, such as those with both vertical and horizontal or slant +45° and -45° polarized elements.

Antenna Environmental Specifications

The selected antenna must have suitable mechanical and environmental specifications for the environment where it will be deployed. For example, shock and vibration specifications for transportation, corrosion resistant construction for marine and oil and gas industries, or IP (ingress protection) rating for outdoor deployment. Indoor antennas are typically not suitable for harsh industrial environments. Please check with your system integrator for environmental requirements for your application.

Antenna Accessories and Mounting

Consider the following when planning your installation:

- Carefully consider what type of other RF accessories, besides antenna, such as RF cables, lightning arrestors or RF adapters may be required in your installations. It is best to minimize long RF cable runs due to RF signal losses in the cable. Thinner RF cables have more RF loss , thicker cables are less flexible and more expensive.
- Carefully consider how the antenna will be physically mounted, as this may affect antenna selection. For example, a stud mount mechanical mounting design is a better fit for mounting on top of an electrical cabinet than a mast mount antenna.
- For outdoor deployments, follow installation instructions for the antenna. It is good practice to keep protective covers on the radio's RF ports and any antenna or accessory RF ports until the moment the interfaces are mated. This reduces chances of contamination, trapping water or condensation inside the connector, or accidental damage to RF interfaces.

MIMO Performance and Arrays

MIMO systems deliver benefits of higher SNR, higher reliability and higher throughput compared to single antenna systems. In more technical terms, MIMO delivers array gain, diversity gain and multiplexing gain compared to single antenna.

- Array gain — Improvement in SNR (signal to noise ratio) by coherently combining signals from multiple antennas. For example, increasing SNR through beamforming techniques.
- Diversity gain — Improvement in reliability by mitigating deep fading or strong destructive EM wave interference. For example, in a two-antenna system, if one antenna is experiencing deep fading due to an EM destructive null at its location at a given instant, the other antenna is unlikely to have a null at the same instant, and the combined SNR stays at a reliable level. In contrast, a single antenna would see SNR oscillating between good SNR and very poor SNR and reliability would degrade.
- Multiplexing gain — Increase in system capacity or throughput by sending independent data over multiple spatial streams simultaneously. The number of streams cannot be more than the number of antennas. For example, to support three spatial streams, a minimum of three antennas is required. Often there may be additional antennas for diversity or redundancy, such as in the case of 4x4:3, or 4x4 MIMO with 3 spatial streams.

If deploying multiple single-element antennas for a MIMO system in an array, ensure sufficient spacing between the antennas. Omnidirectional elements should generally be at least one wavelength apart at the lowest operating frequency.

Consider the following:

- For Wi-Fi systems operating in the 2.4, 5, and/or 6 GHz bands, space elements at least 5 inches (12.5 cm) apart.

- For 4G LTE and 5G systems with the lowest operating frequency of 617 MHz , space elements at least 20 inches (50 cm) apart.
- Note that spacing between elements inside multi-element MIMO antennas is often less than one wavelength. However multi-element antennas are engineered with MIMO performance in mind, by providing antenna diversity through pattern, polarization, and isolation between MIMO elements.

Antenna siting and location

Consider the following when planning your installation:

- Plan antenna location ahead of time. Ideal location for an antenna is in LOS (line of sight) of the counterpart that it is trying to communicate with. Under LOS conditions the signals propagate directly between the two communication nodes, without relying on signal bouncing off a wall or other structure to reach the counterpart. This is sometimes not possible to achieve in practice, but it is a useful goal to keep in mind when optimizing antenna location.
- While it is good to keep RF cables short, it is most desirable for an antenna to be in the best location it can be to provide the desired coverage.
- For large deployments involving multiple units communicating with each other across a complex urban or industrial landscape, consider running an RF propagation modeling study to predict approximate simulated coverage maps and determine initial placement of the units. A propagation study may help reduce overall deployment cost by discovering and mitigating issues with RF coverage before the infrastructure is physically installed.
- Keep the antenna away from metal obstructions such as heating and air-conditioning ducts, large ceiling trusses, building superstructures, and major power cabling runs. One exception is if the antenna is designed to be mounted on a ground plane. If mounting on a ground plane, mount the antenna on a flat metal surface away from adjacent obstructions.
- It is strongly recommended not to install antennas directly on the router or access point (AP), unless the router or AP is specifically engineered to directly mount the antennas. Products that are engineered for direct mounting of antennas specifically address each of the below issues.
- Reasons to mount antennas away from the router include:
  - Router location may not be optimal location for antenna to communicate with the counterpart wirelessly, so router and antenna may need to be in different locations.
  - Router may have a clutter of Ethernet cable and power cables around it, which will obstruct antenna signal.
  - A number of routers, such as the IR1835, are modular. They have plug-in RF modules for Wi-Fi , 4G LTE or 5G NR such as WP-WIFI6, P-LTEAP18-GL, P-5GS6-GL. These modules have RF connectors spaced close together, and while it is mechanically possible to install four or five antennas directly attached, this will result in significant degradation to RF performance of antennas due to mutual de-tuning between closely spaced antennas. It is strongly recommended to install antennas away from the chassis in modular cases.
- If installing an antenna indoors, consider that the density and electromagnetic properties of the materials used in the building construction determines the number of walls the signal can pass through and still maintain adequate coverage.
  - Paper and vinyl walls have very little effect on signal penetration.

- Solid and pre-cast concrete walls limit signal penetration to one or two walls without degrading coverage.
- Concrete and wood block walls limit signal penetration to three or four walls.
- A signal can penetrate five or six walls constructed of drywall or wood.
- A thick metal wall causes signals to reflect off, causing poor penetration.
- A chain link fence or wire mesh spaced between 1 and 1 1/2 in. (2.5 and 3.8 cm) acts as a harmonic reflector that blocks a 2.4-GHz radio signal.
- Install the antenna away from microwave ovens and 2-GHz cordless phones. These products can cause signal interference because they operate in the same frequency range as the device your antenna is connected to.

Antenna Installation

The antenna installation includes the following procedures:

Tools and Equipment Required

In addition to the parts included in the antenna kit described in the contents section, you must provide the following tool to install the antenna on the router:

- A flathead screwdriver
- 3/4 in. open-end wrench
- LMR-400 with male end-to-end RF cable (weatherized)
- Coax seal

Note This list does not include the tools and equipment required to assemble and erect the tower, mast, or other structure you intend to mount your antenna on.

Installing the Antenna

Follow these instructions to install the antenna:

Step 1 Choose the mounting polarization configuration that you prefer.

Note Your connector type, location and quantity might differ from what is shown in the following figure.

Figure 195: Antenna Polarization

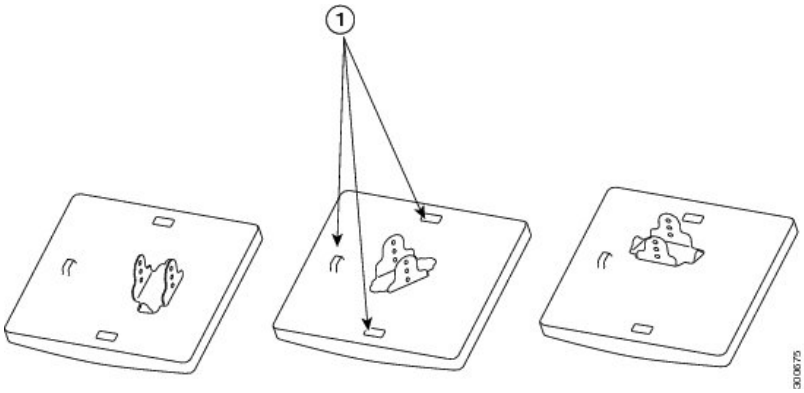

Item 1. in the figure illustrates the drain hole locations.

Step 2 Attach the antenna mount bracket to the back of the antenna by using two sets of flat washers, lock washers, and hex nuts. Tighten the nut to a torque rating of 55 in-lbf (6.2 Nm).

Figure 196: Antenna Mount Bracket

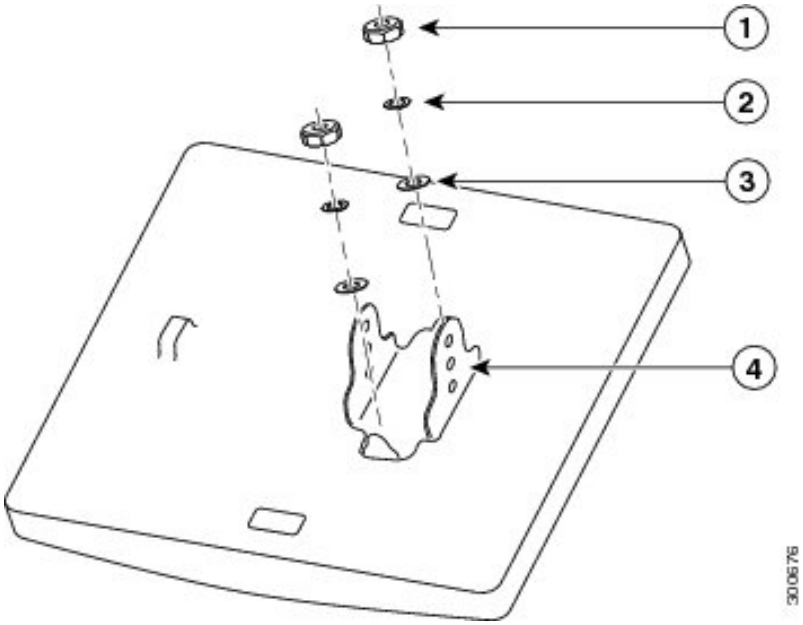

1	1/4”-20 hex nut
2	1/4”20 spring lock washer
3	1/4”-20 flat washer
4	Antenna mount bracket

Step 3 Attach the elevation adjustable bracket to the mount bracket using two sets of carriage bolts, washers, lock washers, and hex nuts. Position the bolts so the carriage bolt square holes are positioned on the inside. Do not tighten fully. Allow the bracket to move freely.

Figure 197: Elevation Brackets

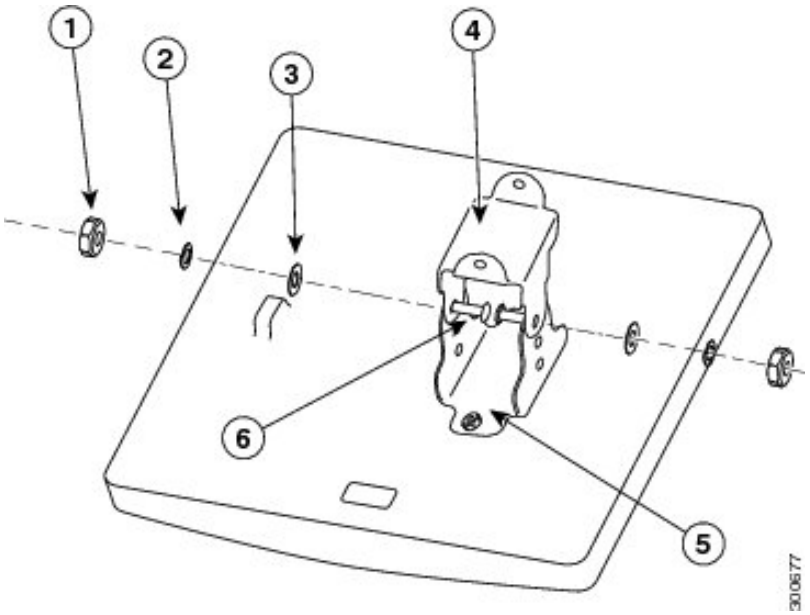

1	1/4”-20 hex nut
2	1/4”-20 spring lock washer
3	1/4”-20 flat washer
4	Elevation adjustable bracket
5	Antenna-mount bracket
6	1/4”-20x3/4 carriage bolt

Step 4 Position the azimuth adjustable (pipe) bracket to the pipe with the flanges away from the pipe. Secure each bracket to the pipe first by routing the band clamps around the pipe, then through the two holes. Tighten to a maximum torque rating.

Figure 198: Azimuth Bracket

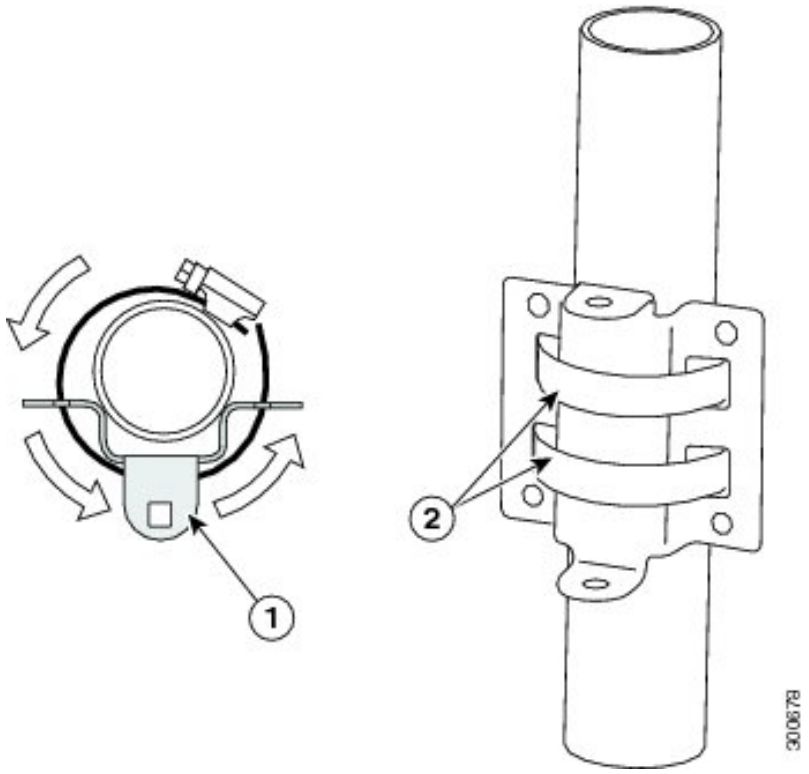

1	Azimuth adjustable bracket
2	Pipe clamps

Step 5 Attach the antenna assembly to the installed azimuth bracket. Position each of the two flanges on elevation adjustable bracket (on the antenna) over the flanges on the azimuth (pipe) bracket.

Figure 199: Attach Antenna Assembly

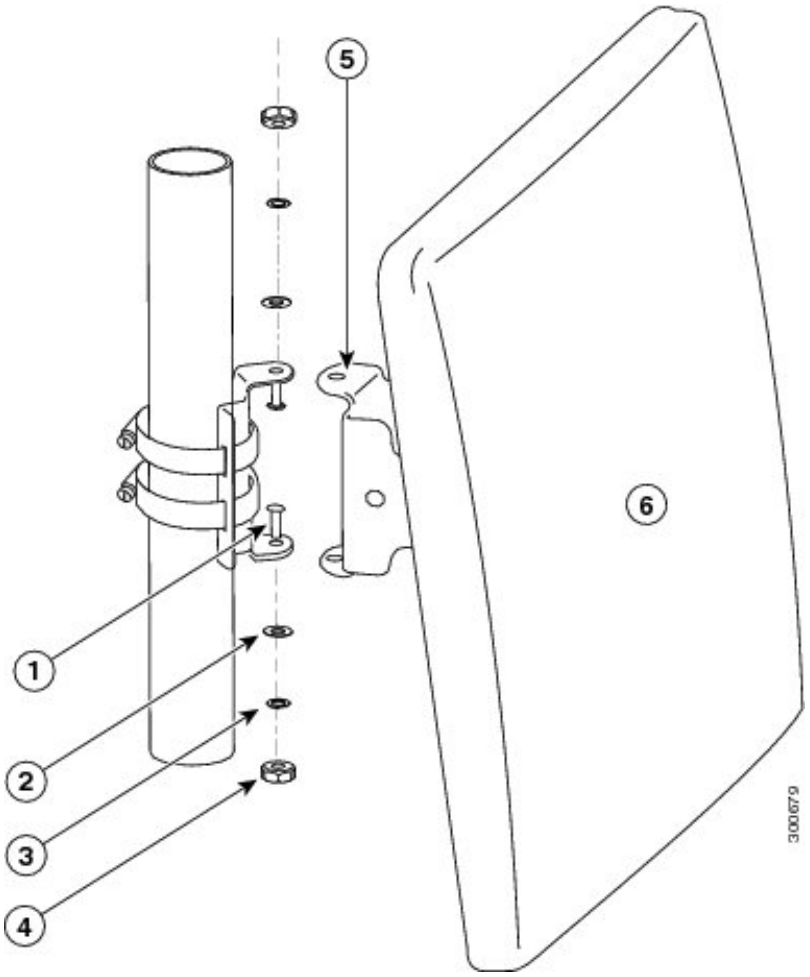

1	1/4”-20x3/4 carriage bolt
2	1/4”-20 flat washer
3	1/4”-20 spring lock washer
4	1/4”-20 hex nut
5	Elevation adjustable bracket
6	Panel antenna

Step 6 Adjust to the desired azimuth and elevation angles. Tighten all nuts and bolts to a torque rating of 55 in-lbf.

Step 7 Attach the lightning arrestor to the router.

Step 8 Attach the RF cable to the antenna by connecting the ends of the LMR-400 cables to the two receptacles on the rear of the antenna panel

Note The 3G panel has only one connector per antenna.

Figure 200: Attach RF Cables

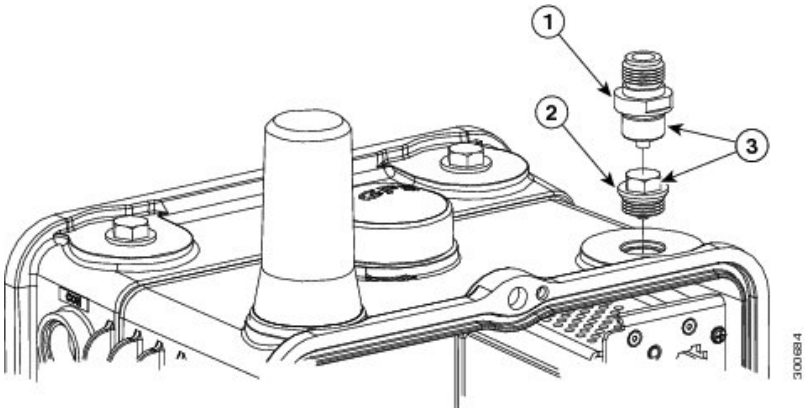

1	N-connector: torque to 6 to 7 ft-lbs
2	Plug: torque to 6 to 7 ft-lbs
3	Ports must have either an antenna, connector, or plug installed.

Step 9 Seal the cable connections on the router and the back of the antenna by using weatherproof sealing tape (coax seal) at the connector junction. Start wrapping at the top of the antenna connector, wrap downward 3 times and end about 2 inches downward from the center of the connecter junction. Then wrap upwards another 3 times to reach the top of the antenna connector.

Step 10 To attach the router-end of the cable to your device, please refer to the appropriate Hardware Installation Procedures for the model of hardware you are installing.

Connecting the Lightning Arrestor

To install a lightning-protection device, please refer to the appropriate Hardware Installation Procedures for the model of hardware you are installing.

Connecting the Antenna to the Router

To attach the router-end of the cable to your device, please refer to the appropriate Hardware Installation Procedures for the model of hardware you are installing.

Communications, Services, and Additional Information

- To receive timely, relevant information from Cisco, sign up at Cisco Profile Manager.
- To get the business impact you're looking for with the technologies that matter, visit Cisco Services.
- To submit a service request, visit Cisco Support.

- To discover and browse secure, validated enterprise-class apps, products, solutions, and services, visit Cisco DevNet.
- To obtain general networking, training, and certification titles, visit Cisco Press.
- To find warranty information for a specific product or product family, access Cisco Warranty Finder.

Cisco Bug Search Tool

Cisco Bug Search Tool (BST) is a web-based tool that acts as a gateway to the Cisco bug tracking system that maintains a comprehensive list of defects and vulnerabilities in Cisco products and software. BST provides you with detailed defect information about your products and software.

Documentation Feedback

To provide feedback about Cisco technical documentation, use the feedback form available in the right pane of every online document.

Cisco Support Community

Cisco Support Community is a forum for you to ask and answer questions, share suggestions, and collaborate with your peers. Join the forum at https://supportforums.cisco.com/index.jspa.

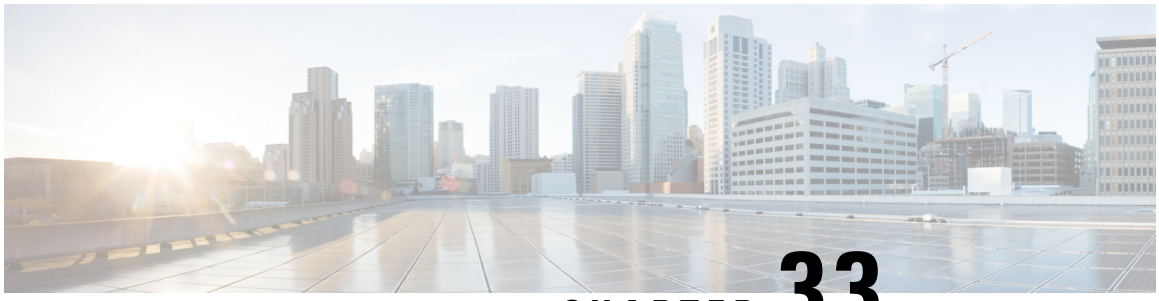

CHAPTER 33

Cisco Multiband Indoor 4G Volcano Antenna (ANT-4G-CM-IN-TNC)

This chapter contains the following:

- Overview, on page 551
- Technical Specifications, on page 551
- Radiation Patterns, on page 553
- Contents of the Antenna Kit, on page 554
- General Safety Precautions, on page 555
- Guidelines to Achieving Optimal RF and Antenna Performance, on page 557
- Antenna Installation, on page 560
- Communications, Services, and Additional Information, on page 562

Overview

This document describes the Cisco Multiband Indoor 4G Ceiling-mount Volcano Antenna. It supports frequencies of 698 to 960 MHz, 1575 MHz, and 1710 to 2700 MHz for the GSM, DCS, UMTS, and LTE/WiMAX frequency bands. In addition, this document provides the antenna specifications and mounting instructions of the antenna.

Note Read the information in the Overview section before installing or replacing antennas.

This chapter covers the following topics:

Technical Specifications

The 4G Volcano Antenna features the following:

- Indoor ceiling mount
- Radiation pattern shaped to perform optimally for a ceiling-mount antenna
- Low-profile, aesthetically neutral housing

- Performance optimized using proprietary RF optimization tools
- Excellent flame rating

Figure 201: 4G Volcano Antenna



RF Specifications

Specification	Description
Frequency range	698 to 960 MHz 1575 MHz 1710 to 2700 MHz
Peak gain	• 1 dBi (698 to 960 MHz) • 2 dBi (1575 MHz) • 3 dBi (1710 to 2700 MHz)
VSWR	• 2.0:1 (698 to 960 MHz) • 2.5:1 (1575 MHz) • 2.0:1 (1710 to 2700 MHz)
H-plane (3 dB beamwidth)	Omnidirectional

Specification	Description
Efficiency	Antennas were designed and tested to high RF efficiency in all supported cellular bands. Detailed technical specifications can be obtained through your Cisco authorized partner or Cisco account representative.
Polarization	Linear, vertical

Mechanical Specifications

Specification	Description
Type	Omnidirectional
Mount Style	Ceiling mount
Environment	Indoor
Dimensions	Diameter 199 mm x height 86 mm
RF connector	TNC (m)
Cable	305 mm, plenum rated
Enclosure	PC/ABS, UV stable
Antenna weight	0.34 kg
Power	3 watts
Mounting	Ceiling mount (flush), screws, anchors, threaded stem
Nominal impedance	50 ohm
Operational temperature	-22 to 158 degrees F (-30 to 70 degrees C)
Storage temperature	-40 to 185 degrees F (-40 to 85 degrees C)
Material substance compliance	RoHS 6/6
Flammability rating	UL-94V0 materials

Radiation Patterns

The following graphics show the radiation patterns of the Volcano antenna for the supported frequency.

Figure 202: 4G Volcano Antenna Radiation Patterns

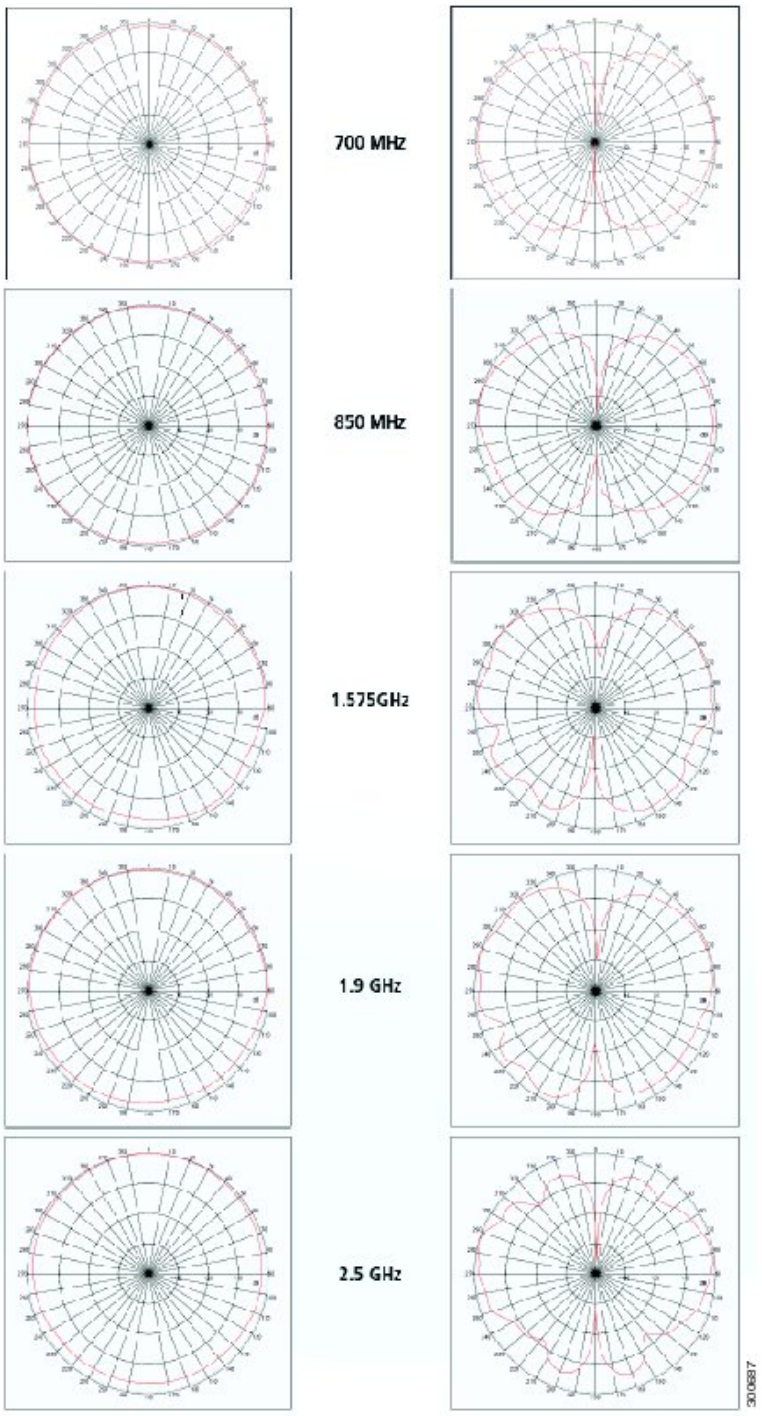

Contents of the Antenna Kit

The Cisco Multiband Indoor 4G Ceiling-mount Volcano Antenna Kit contains the following items:

- Ceiling-mount Volcano antenna, with integrated TNC cable
- Antenna bracket
- Flat washer
- Curved spring washer
- Mounting nut
- Three #6 x 1-1/4” mounting screws with anchors
- Three self-adhesive screw covers

General Safety Precautions

Warning This warning symbol means danger. You are in a situation that could cause bodily injury. Before you work on any equipment, be aware of the hazards involved with electrical circuitry and be familiar with standard practices for preventing accidents. Use the statement number provided at the end of each warning to locate its translation in the translated safety warnings that accompanied this device. **Statement 1071**

Warning Do not work on the system or connect or disconnect cables during periods of lightning activity. **Statement 1001**

Warning Do not locate the outdoor antenna near overhead power lines or other electric light or power circuits, or where it can come into contact with such circuits. When installing the antenna, take extreme care not to come into contact with such circuits, as they may cause serious injury or death. For proper installation and grounding of the antenna, please refer to national and local codes (for example, U.S.:NFPA 70, National Electrical Code, Article 810, Canada:Canadian Electrical Code, Section 54). **Statement 1052**

Warning In order to comply with FCC radio frequency (RF) exposure limits, antennas should be located at a minimum of 7.9 inches (20 cm) or more from the body of all persons. **Statement 332**

Note For your safety, and to help you achieve a good installation, please read and follow these safety precautions.

Mast Mounted or Building Mounted Installations

The following instructions are common to most mast mounted or building mounted installations. For specific installation instructions for each antenna, see the antenna data-sheet and the router hardware installation guide.

- Find someone to help you—installing an antenna is often a two-person job.

- Select your installation site with safety, as well as performance, in mind. Remember that electric power lines and phone lines look alike. For your safety, assume that any overhead line can kill you.
- Contact your electric power company. Tell them your plans and ask them to come look at your proposed installation.
- Do not use a metal ladder.
- Do not work on a wet or windy day.
- Do dress properly—wear shoes with rubber soles and heels, rubber gloves, and a long-sleeved shirt or jacket.
- If the assembly starts to drop, move away from it and let it fall. Because the antenna, mast, cable, and metal guy wires are all excellent conductors of electrical current, even the slightest touch of any of these parts to a power line completes an electrical path through the antenna and the installer.
- If any part of the antenna system should come in contact with a power line, do not touch it or try to remove it yourself. Call your local power company to have it removed safely.
- If an accident should occur with the power lines, call for qualified emergency help immediately.
- Assemble your new antenna on the ground or a level surface at the installation site.
- Connect its coaxial cable while you are on the ground and attach the antenna to the mast.
- Ensure that the mast does not fall as you raise or remove it. Use a durable non-conductive rope secured at each two foot level as the mast is raised. Have an assistant tend the rope, ready to pull the mast clear of any hazards (such as power lines) should it begin to fall.
- Use the mounting bracket provided with the antenna.
- If the installation will use guy wires:
    - Install guy anchor bolts.
    - Estimate the length of guy wire and cut it before raising the mast.
    - Attach guy wires to a mast using guy rings.
    - In the case of a guyed (tall, thin mast) installation, you must have at least one assistant to hold the mast upright while the guy wires are attached and tightened to the anchor bolts.
- Attach a “DANGER” label at eye level on the mast.
- Install ground rods to remove any static electricity buildup and connect a ground wire to the mast and ground rod. Use ground rods designed for that purpose, not a spare piece of pipe.

Unused Antenna Ports

Port plugs must be installed in any unused antenna ports.

The weatherproof caps on the connectors protect the router interior from environmental elements including water, heat, cold, and dust. They are installed on unused ports before the router is shipped.

When you install a new antenna in a port with an N-connector:

- Chassis-mounted antennas—Remove the weather proof cap before installing a chassis-mounted antenna.

- External antennas—Remove weatherproof cap, then connect the supported Cisco cable to the connector.

Guidelines to Achieving Optimal RF and Antenna Performance

Antennas are a critical component of a wireless communication system. Selecting a suitable antenna, an optimal antenna location, or antenna site is essential for optimum performance of a wireless links.

This section covers general tips for optimizing RF performance of indoor and outdoor terrestrial radio systems in the 400-7125 MHz frequency range. Examples of terrestrial radio systems include 4G LTE, 5G NR, Wi-Fi, LoRa, LR-WPAN and similar. In this context GPS SPS would not be considered a terrestrial system as the signal is received from space, not from another terrestrial site.

Because the antenna transmits and receives radio signals over the air, overall RF performance of the link is susceptible to RF obstructions and common sources of RF interference that can reduce throughput and range of the system.

Follow these guidelines to optimize performance. When in doubt, consult a qualified RF professional, and check with your solution partner for specific recommendations.

Antenna Model Selection and Performance

Consider the following when planning your installation:

- When selecting the antenna, ensure that it covers the frequency ranges or frequency bands of interest, and that it has good RF parameters such as antenna efficiency, VSWR and suitable radiation pattern for every frequency range that your application will use with this antenna.
- Antenna pattern is important. Omni-directional antennas have lower gain, but allow communicating to devices in all azimuth directions. Directional antennas concentrate the beam in a specific direction, making them ideal for point to point communication.
- When a system has multiple RF ports for receive and / or transmit, as is the case for 4G LTE , 5G NR or Wi-Fi, it is highly recommended to populate all the RF ports with suitable antennas to take advantage of MIMO, rather than rely on a single port or single antenna to save on cost. Please see the MIMO section for a detailed description of MIMO benefits.
- For RF systems that support multiple RF ports and multiple RF standards such as LTE, Wi-Fi, and GPS: consider using a multi-element antenna that integrates multiple antennas under the same radome (cover). Doing so may reduce cost compared to deploying and mounting a discrete single port antenna for every RF port.
- For communication between fixed infrastructure devices, such as mesh nodes or a point-to-point backhaul link, each device should have an antenna with the same polarization. If communicating with mobile devices that might be randomly oriented, consider dual-polarized antennas, such as those with both vertical and horizontal or slant +45° and -45° polarized elements.

Antenna Environmental Specifications

The selected antenna must have suitable mechanical and environmental specifications for the environment where it will be deployed. For example, shock and vibration specifications for transportation, corrosion resistant construction for marine and oil and gas industries, or IP (ingress protection) rating for outdoor deployment. Indoor antennas are typically not suitable for harsh industrial environments. Please check with your system integrator for environmental requirements for your application.

Antenna Accessories and Mounting

Consider the following when planning your installation:

- Carefully consider what type of other RF accessories, besides antenna, such as RF cables, lightning arrestors or RF adapters may be required in your installations. It is best to minimize long RF cable runs due to RF signal losses in the cable. Thinner RF cables have more RF loss , thicker cables are less flexible and more expensive.
- Carefully consider how the antenna will be physically mounted, as this may affect antenna selection. For example, a stud mount mechanical mounting design is a better fit for mounting on top of an electrical cabinet than a mast mount antenna.
- For outdoor deployments, follow installation instructions for the antenna. It is good practice to keep protective covers on the radio's RF ports and any antenna or accessory RF ports until the moment the interfaces are mated. This reduces chances of contamination, trapping water or condensation inside the connector, or accidental damage to RF interfaces.

MIMO Performance and Arrays

MIMO systems deliver benefits of higher SNR, higher reliability and higher throughput compared to single antenna systems. In more technical terms, MIMO delivers array gain, diversity gain and multiplexing gain compared to single antenna.

- Array gain — Improvement in SNR (signal to noise ratio) by coherently combining signals from multiple antennas. For example, increasing SNR through beamforming techniques.
- Diversity gain — Improvement in reliability by mitigating deep fading or strong destructive EM wave interference. For example, in a two-antenna system, if one antenna is experiencing deep fading due to an EM destructive null at its location at a given instant, the other antenna is unlikely to have a null at the same instant, and the combined SNR stays at a reliable level. In contrast, a single antenna would see SNR oscillating between good SNR and very poor SNR and reliability would degrade.
- Multiplexing gain — Increase in system capacity or throughput by sending independent data over multiple spatial streams simultaneously. The number of streams cannot be more than the number of antennas. For example, to support three spatial streams, a minimum of three antennas is required. Often there may be additional antennas for diversity or redundancy, such as in the case of 4x4:3, or 4x4 MIMO with 3 spatial streams.

If deploying multiple single-element antennas for a MIMO system in an array, ensure sufficient spacing between the antennas. Omnidirectional elements should generally be at least one wavelength apart at the lowest operating frequency.

Consider the following:

- For Wi-Fi systems operating in the 2.4, 5, and/or 6 GHz bands, space elements at least 5 inches (12.5 cm) apart.
- For 4G LTE and 5G systems with the lowest operating frequency of 617 MHz , space elements at least 20 inches (50 cm) apart.
- Note that spacing between elements inside multi-element MIMO antennas is often less than one wavelength. However multi-element antennas are engineered with MIMO performance in mind, by providing antenna diversity through pattern, polarization, and isolation between MIMO elements.

Antenna siting and location

Consider the following when planning your installation:

- Plan antenna location ahead of time. Ideal location for an antenna is in LOS (line of sight) of the counterpart that it is trying to communicate with. Under LOS conditions the signals propagate directly between the two communication nodes, without relying on signal bouncing off a wall or other structure to reach the counterpart. This is sometimes not possible to achieve in practice, but it is a useful goal to keep in mind when optimizing antenna location.
- While it is good to keep RF cables short, it is most desirable for an antenna to be in the best location it can be to provide the desired coverage.
- For large deployments involving multiple units communicating with each other across a complex urban or industrial landscape, consider running an RF propagation modeling study to predict approximate simulated coverage maps and determine initial placement of the units. A propagation study may help reduce overall deployment cost by discovering and mitigating issues with RF coverage before the infrastructure is physically installed.
- Keep the antenna away from metal obstructions such as heating and air-conditioning ducts, large ceiling trusses, building superstructures, and major power cabling runs. One exception is if the antenna is designed to be mounted on a ground plane. If mounting on a ground plane, mount the antenna on a flat metal surface away from adjacent obstructions.
- It is strongly recommended not to install antennas directly on the router or access point (AP), unless the router or AP is specifically engineered to directly mount the antennas. Products that are engineered for direct mounting of antennas specifically address each of the below issues.
- Reasons to mount antennas away from the router include:
    - Router location may not be optimal location for antenna to communicate with the counterpart wirelessly, so router and antenna may need to be in different locations.
    - Router may have a clutter of Ethernet cable and power cables around it, which will obstruct antenna signal.
    - A number of routers, such as the IR1835, are modular. They have plug-in RF modules for Wi-Fi , 4G LTE or 5G NR such as WP-WIFI6, P-LTEAP18-GL, P-5GS6-GL. These modules have RF connectors spaced close together, and while it is mechanically possible to install four or five antennas directly attached, this will result in significant degradation to RF performance of antennas due to mutual de-tuning between closely spaced antennas. It is strongly recommended to install antennas away from the chassis in modular cases.
- If installing an antenna indoors, consider that the density and electromagnetic properties of the materials used in the building construction determines the number of walls the signal can pass through and still maintain adequate coverage.
    - Paper and vinyl walls have very little effect on signal penetration.
    - Solid and pre-cast concrete walls limit signal penetration to one or two walls without degrading coverage.
    - Concrete and wood block walls limit signal penetration to three or four walls.
    - A signal can penetrate five or six walls constructed of drywall or wood.
    - A thick metal wall causes signals to reflect off, causing poor penetration.

- A chain link fence or wire mesh spaced between 1 and 1 1/2 in. (2.5 and 3.8 cm) acts as a harmonic reflector that blocks a 2.4-GHz radio signal.
- Install the antenna away from microwave ovens and 2-GHz cordless phones. These products can cause signal interference because they operate in the same frequency range as the device your antenna is connected to.

Antenna Installation

The antenna installation includes the following procedures:

Tools and Equipment Required

In addition to the parts included in the antenna kit described earlier, you must provide the following tool to install the antenna on the router:

- Phillips screwdriver
- Open-end wrench
- Drill
- Marker or pencil

Installing the Antenna

Follow these instructions to install the antenna:

Step 1 Determine where on the ceiling you want to install the antenna.

Step 2 Create the center hole to accommodate the 3/4”-16 threaded center rod on the Volcano antenna.

Step 3 Position the Volcano antenna onto the ceiling. Mark on the ceiling the location of the three holes.

Step 4 Remove the antenna and drill the three holes. Place the screw anchors into the holes.

Step 5 Position the antenna in place. Secure the antenna onto the ceiling with the 3 screws using a Phillips #2 screwdriver.

Step 6 From inside the ceiling space, place, in order, the flat washer and curved spring washer onto the center rod. Secure the antenna with the mounting nut.

Figure 203: Antenna Details

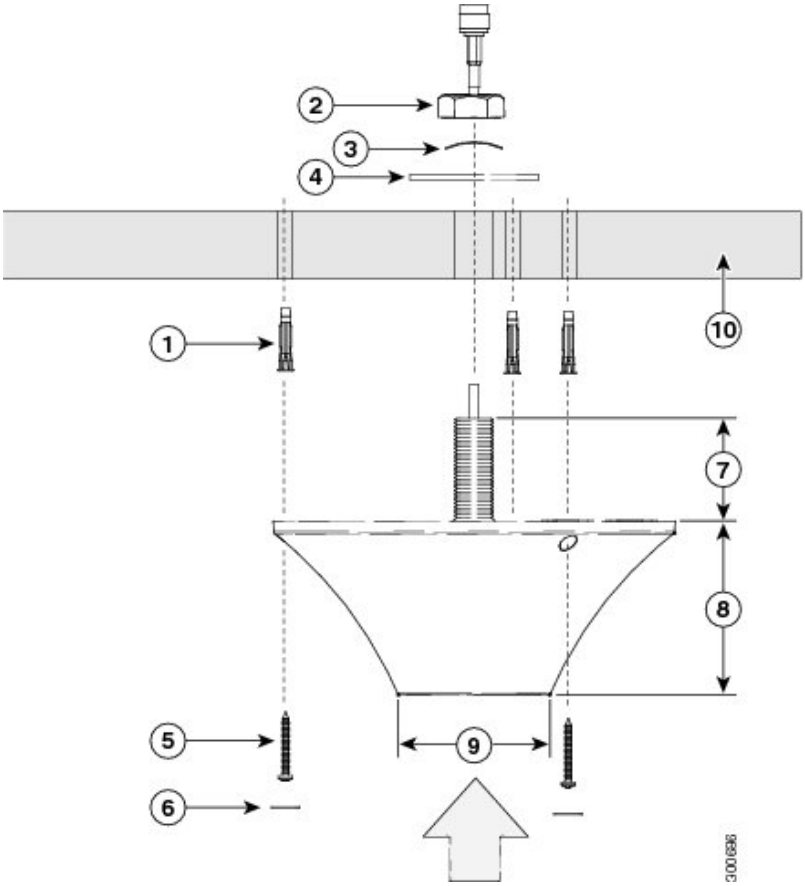

1	Mounting anchors for hard ceiling (3)
2	Mounting nut
3	Curved spring washer
4	Flat washer (wide series)
5	#6 1-1/4” mounting screws (3)
6	Self-adhesive screw covers (3)
7	50.8 mm
8	86.0 +/- 1.0 mm
9	75.0 +/- 1.0
D	Ceiling, hard wall material

Step 7 Place the self-adhesive screw covers (3) over the screw holes on the antenna.

Step 8 Attach the cable to the antenna connector.

Step 9 Attach the router-end of the cable to your router.

Communications, Services, and Additional Information

- To receive timely, relevant information from Cisco, sign up at Cisco Profile Manager.
- To get the business impact you're looking for with the technologies that matter, visit Cisco Services.
- To submit a service request, visit Cisco Support.
- To discover and browse secure, validated enterprise-class apps, products, solutions, and services, visit Cisco DevNet.
- To obtain general networking, training, and certification titles, visit Cisco Press.
- To find warranty information for a specific product or product family, access Cisco Warranty Finder.

Cisco Bug Search Tool

Cisco Bug Search Tool (BST) is a web-based tool that acts as a gateway to the Cisco bug tracking system that maintains a comprehensive list of defects and vulnerabilities in Cisco products and software. BST provides you with detailed defect information about your products and software.

Documentation Feedback

To provide feedback about Cisco technical documentation, use the feedback form available in the right pane of every online document.

Cisco Support Community

Cisco Support Community is a forum for you to ask and answer questions, share suggestions, and collaborate with your peers. Join the forum at https://supportforums.cisco.com/index.jspa.

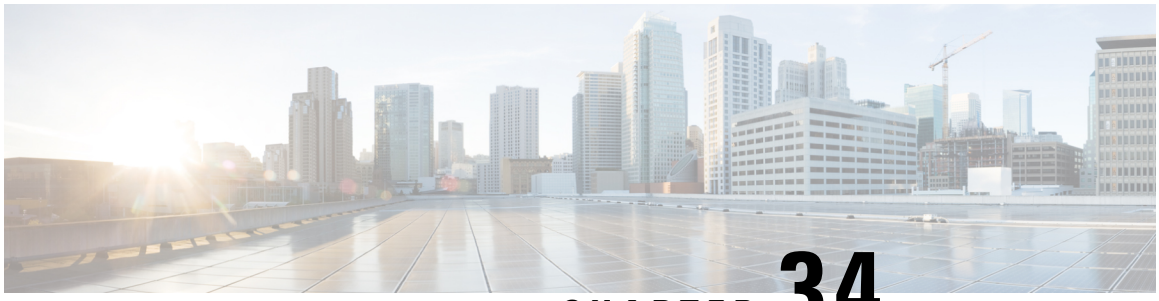

CHAPTER 34

Cisco Indoor Swivel-mount Dipole Antenna (ANT-4G-DP-IN-TNC)

This chapter contains the following:

- Overview, on page 563
- Technical Specifications, on page 564
- General Safety Precautions, on page 566
- Guidelines to Achieving Optimal RF and Antenna Performance, on page 568
- Antenna Installation, on page 571
- Communications, Services, and Additional Information, on page 572

Overview

This section provides the antenna specifications and mounting instructions for the Cisco Indoor Swivel-mount Dipole 3G/4G Antenna supported on the Connected Grid Router 1120 and is designed to support Cellular/PCS/AWS/MDS, WiMAX 2100/2300/2500/2600 and global GSM900/GSM1800/UMTS/LTE2600 bands.

Caution Read the information in Safety Warnings before installing or replacing antennas.

Figure 204: Swivel-mount Indoor Dipole Antenna

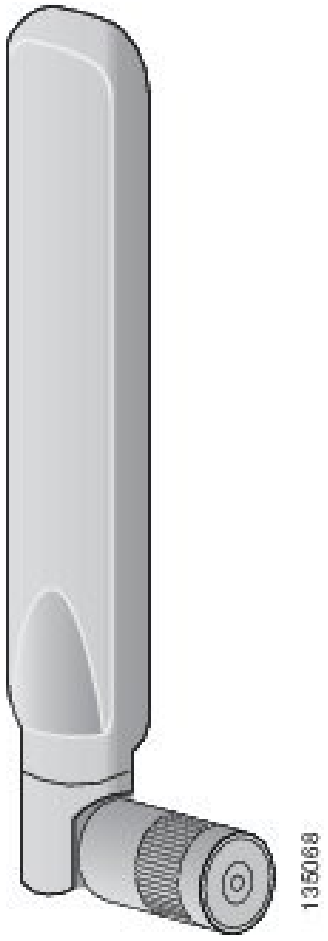

Technical Specifications

- Low-profile blade style sheath
- Applicable for both 3G and 4G solutions
- Domestic LTE 700 and global LTE 2600 bands
- Domestic cellular and global GSM
- Conformance to RoHS
- Complete cellular and 3G/4G data communications in a single antenna
- Articulating arm that allows antenna positioning to provide maximal coverage

RF Specifications

Specification	Description
Frequency ranges	698 to 806 MHz 824 to 894 MHz 880 to 960 MHz 1710 to 1880 MHz 1850 to 1990 MHz 1920 to 2170 MHz 2100 to 2500 MHz 2500 to 2690 MHz
Peak gain (dBi)	0.5 dBi (698 to 960 MHz) 2.2 dBi (1710 to 2700 MHz)
Efficiency	Antennas were designed and tested to high RF efficiency in all supported cellular bands. Detailed technical specifications can be obtained through your Cisco authorized partner or Cisco account representative.
VSWR	< 2.5:1
Nominal impedance	50 ohms
Polarization	Linear

Mechanical Specifications

Specification	Description
Type	Dipole
Size (L x W x D)	229 mm x 30.5 mm x 15 mm
Mount style	Direct mount
Environment	Indoor
RF Connector	TNC (m)
Antenna weight	49 g
Operational temperature	-31 to 158 degrees F (-35 to +70 degrees C)
Maximum input power	3 watts
Material substance compliance	RoHS compliant

Radiation Patterns

Figure 205: Swivel-mount Dipole Antenna Radiation Patterns

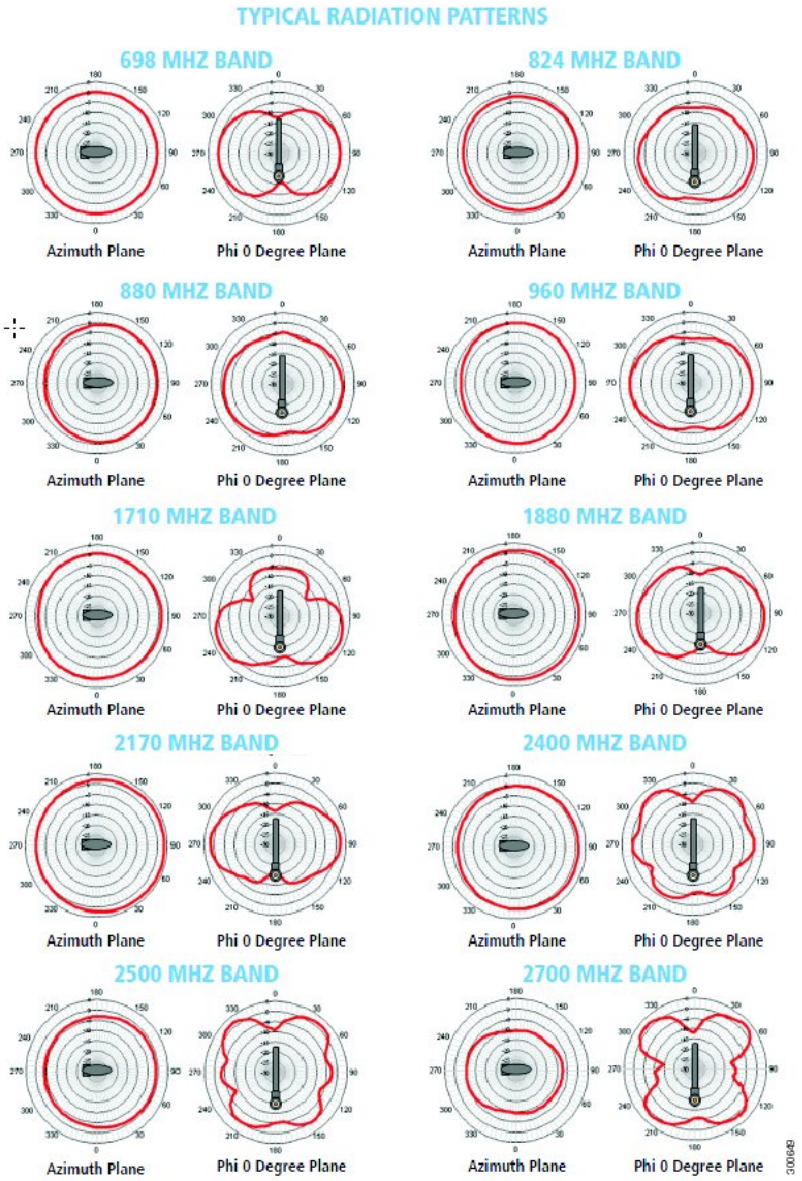

General Safety Precautions

Warning This warning symbol means danger. You are in a situation that could cause bodily injury. Before you work on any equipment, be aware of the hazards involved with electrical circuitry and be familiar with standard practices for preventing accidents. Use the statement number provided at the end of each warning to locate its translation in the translated safety warnings that accompanied this device. **Statement 1071**

Warning Do not work on the system or connect or disconnect cables during periods of lightning activity. **Statement 1001**

Warning Do not locate the outdoor antenna near overhead power lines or other electric light or power circuits, or where it can come into contact with such circuits. When installing the antenna, take extreme care not to come into contact with such circuits, as they may cause serious injury or death. For proper installation and grounding of the antenna, please refer to national and local codes (for example, U.S.:NFPA 70, National Electrical Code, Article 810, Canada:Canadian Electrical Code, Section 54). **Statement 1052**

Warning In order to comply with FCC radio frequency (RF) exposure limits, antennas should be located at a minimum of 7.9 inches (20 cm) or more from the body of all persons. **Statement 332**

Note For your safety, and to help you achieve a good installation, please read and follow these safety precautions.

Mast Mounted or Building Mounted Installations

The following instructions are common to most mast mounted or building mounted installations. For specific installation instructions for each antenna, see the antenna data-sheet and the router hardware installation guide.

- Find someone to help you—installing an antenna is often a two-person job.
- Select your installation site with safety, as well as performance, in mind. Remember that electric power lines and phone lines look alike. For your safety, assume that any overhead line can kill you.
- Contact your electric power company. Tell them your plans and ask them to come look at your proposed installation.
- Do not use a metal ladder.
- Do not work on a wet or windy day.
- Do dress properly—wear shoes with rubber soles and heels, rubber gloves, and a long-sleeved shirt or jacket.
- If the assembly starts to drop, move away from it and let it fall. Because the antenna, mast, cable, and metal guy wires are all excellent conductors of electrical current, even the slightest touch of any of these parts to a power line completes an electrical path through the antenna and the installer.
- If any part of the antenna system should come in contact with a power line, do not touch it or try to remove it yourself. Call your local power company to have it removed safely.
- If an accident should occur with the power lines, call for qualified emergency help immediately.
- Assemble your new antenna on the ground or a level surface at the installation site.
- Connect its coaxial cable while you are on the ground and attach the antenna to the mast.

- Ensure that the mast does not fall as you raise or remove it. Use a durable non-conductive rope secured at each two foot level as the mast is raised. Have an assistant tend the rope, ready to pull the mast clear of any hazards (such as power lines) should it begin to fall.
- Use the mounting bracket provided with the antenna.
- If the installation will use guy wires:
  - Install guy anchor bolts.
  - Estimate the length of guy wire and cut it before raising the mast.
  - Attach guy wires to a mast using guy rings.
  - In the case of a guyed (tall, thin mast) installation, you must have at least one assistant to hold the mast upright while the guy wires are attached and tightened to the anchor bolts.
- Attach a “DANGER” label at eye level on the mast.
- Install ground rods to remove any static electricity buildup and connect a ground wire to the mast and ground rod. Use ground rods designed for that purpose, not a spare piece of pipe.

Unused Antenna Ports

Port plugs must be installed in any unused antenna ports.

The weatherproof caps on the connectors protect the router interior from environmental elements including water, heat, cold, and dust. They are installed on unused ports before the router is shipped.

When you install a new antenna in a port with an N-connector:

- Chassis-mounted antennas—Remove the weather proof cap before installing a chassis-mounted antenna.
- External antennas—Remove weatherproof cap, then connect the supported Cisco cable to the connector.

Guidelines to Achieving Optimal RF and Antenna Performance

Antennas are a critical component of a wireless communication system. Selecting a suitable antenna, an optimal antenna location, or antenna site is essential for optimum performance of a wireless links.

This section covers general tips for optimizing RF performance of indoor and outdoor terrestrial radio systems in the 400-7125 MHz frequency range. Examples of terrestrial radio systems include 4G LTE, 5G NR, Wi-Fi, LoRa, LR-WPAN and similar. In this context GPS SPS would not be considered a terrestrial system as the signal is received from space, not from another terrestrial site.

Because the antenna transmits and receives radio signals over the air, overall RF performance of the link is susceptible to RF obstructions and common sources of RF interference that can reduce throughput and range of the system.

Follow these guidelines to optimize performance. When in doubt, consult a qualified RF professional, and check with your solution partner for specific recommendations.

Antenna Model Selection and Performance

Consider the following when planning your installation:

- When selecting the antenna, ensure that it covers the frequency ranges or frequency bands of interest, and that it has good RF parameters such as antenna efficiency, VSWR and suitable radiation pattern for every frequency range that your application will use with this antenna.
- Antenna pattern is important. Omni-directional antennas have lower gain, but allow communicating to devices in all azimuth directions. Directional antennas concentrate the beam in a specific direction, making them ideal for point to point communication.
- When a system has multiple RF ports for receive and / or transmit, as is the case for 4G LTE , 5G NR or Wi-Fi, it is highly recommended to populate all the RF ports with suitable antennas to take advantage of MIMO, rather than rely on a single port or single antenna to save on cost. Please see the MIMO section for a detailed description of MIMO benefits.
- For RF systems that support multiple RF ports and multiple RF standards such as LTE, Wi-Fi, and GPS: consider using a multi-element antenna that integrates multiple antennas under the same radome (cover). Doing so may reduce cost compared to deploying and mounting a discrete single port antenna for every RF port.
- For communication between fixed infrastructure devices, such as mesh nodes or a point-to-point backhaul link, each device should have an antenna with the same polarization. If communicating with mobile devices that might be randomly oriented, consider dual-polarized antennas, such as those with both vertical and horizontal or slant +45° and -45° polarized elements.

Antenna Environmental Specifications

The selected antenna must have suitable mechanical and environmental specifications for the environment where it will be deployed. For example, shock and vibration specifications for transportation, corrosion resistant construction for marine and oil and gas industries, or IP (ingress protection) rating for outdoor deployment. Indoor antennas are typically not suitable for harsh industrial environments. Please check with your system integrator for environmental requirements for your application.

Antenna Accessories and Mounting

Consider the following when planning your installation:

- Carefully consider what type of other RF accessories, besides antenna, such as RF cables, lightning arrestors or RF adapters may be required in your installations. It is best to minimize long RF cable runs due to RF signal losses in the cable. Thinner RF cables have more RF loss , thicker cables are less flexible and more expensive.
- Carefully consider how the antenna will be physically mounted, as this may affect antenna selection. For example, a stud mount mechanical mounting design is a better fit for mounting on top of an electrical cabinet than a mast mount antenna.
- For outdoor deployments, follow installation instructions for the antenna. It is good practice to keep protective covers on the radio’s RF ports and any antenna or accessory RF ports until the moment the interfaces are mated. This reduces chances of contamination, trapping water or condensation inside the connector, or accidental damage to RF interfaces.

MIMO Performance and Arrays

MIMO systems deliver benefits of higher SNR, higher reliability and higher throughput compared to single antenna systems. In more technical terms, MIMO delivers array gain, diversity gain and multiplexing gain compared to single antenna.

- Array gain — Improvement in SNR (signal to noise ratio) by coherently combining signals from multiple antennas. For example, increasing SNR through beamforming techniques.
- Diversity gain — Improvement in reliability by mitigating deep fading or strong destructive EM wave interference. For example, in a two-antenna system, if one antenna is experiencing deep fading due to an EM destructive null at its location at a given instant, the other antenna is unlikely to have a null at the same instant, and the combined SNR stays at a reliable level. In contrast, a single antenna would see SNR oscillating between good SNR and very poor SNR and reliability would degrade.
- Multiplexing gain — Increase in system capacity or throughput by sending independent data over multiple spatial streams simultaneously. The number of streams cannot be more than the number of antennas. For example, to support three spatial streams, a minimum of three antennas is required. Often there may be additional antennas for diversity or redundancy, such as in the case of 4x4:3, or 4x4 MIMO with 3 spatial streams.

If deploying multiple single-element antennas for a MIMO system in an array, ensure sufficient spacing between the antennas. Omnidirectional elements should generally be at least one wavelength apart at the lowest operating frequency.

Consider the following:

- For Wi-Fi systems operating in the 2.4, 5, and/or 6 GHz bands, space elements at least 5 inches (12.5 cm) apart.
- For 4G LTE and 5G systems with the lowest operating frequency of 617 MHz , space elements at least 20 inches (50 cm) apart.
- Note that spacing between elements inside multi-element MIMO antennas is often less than one wavelength. However multi-element antennas are engineered with MIMO performance in mind, by providing antenna diversity through pattern, polarization, and isolation between MIMO elements.

Antenna siting and location

Consider the following when planning your installation:

- Plan antenna location ahead of time. Ideal location for an antenna is in LOS (line of sight) of the counterpart that it is trying to communicate with. Under LOS conditions the signals propagate directly between the two communication nodes, without relying on signal bouncing off a wall or other structure to reach the counterpart. This is sometimes not possible to achieve in practice, but it is a useful goal to keep in mind when optimizing antenna location.
- While it is good to keep RF cables short, it is most desirable for an antenna to be in the best location it can be to provide the desired coverage.
- For large deployments involving multiple units communicating with each other across a complex urban or industrial landscape, consider running an RF propagation modeling study to predict approximate simulated coverage maps and determine initial placement of the units. A propagation study may help reduce overall deployment cost by discovering and mitigating issues with RF coverage before the infrastructure is physically installed.
- Keep the antenna away from metal obstructions such as heating and air-conditioning ducts, large ceiling trusses, building superstructures, and major power cabling runs. One exception is if the antenna is designed to be mounted on a ground plane. If mounting on a ground plane, mount the antenna on a flat metal surface away from adjacent obstructions.

- It is strongly recommended not to install antennas directly on the router or access point (AP), unless the router or AP is specifically engineered to directly mount the antennas. Products that are engineered for direct mounting of antennas specifically address each of the below issues.
- Reasons to mount antennas away from the router include:
  - Router location may not be optimal location for antenna to communicate with the counterpart wirelessly, so router and antenna may need to be in different locations.
  - Router may have a clutter of Ethernet cable and power cables around it, which will obstruct antenna signal.
  - A number of routers, such as the IR1835, are modular. They have plug-in RF modules for Wi-Fi , 4G LTE or 5G NR such as WP-WIFI6, P-LTEAP18-GL, P-5GS6-GL. These modules have RF connectors spaced close together, and while it is mechanically possible to install four or five antennas directly attached, this will result in significant degradation to RF performance of antennas due to mutual de-tuning between closely spaced antennas. It is strongly recommended to install antennas away from the chassis in modular cases.
- If installing an antenna indoors, consider that the density and electromagnetic properties of the materials used in the building construction determines the number of walls the signal can pass through and still maintain adequate coverage.
  - Paper and vinyl walls have very little effect on signal penetration.
  - Solid and pre-cast concrete walls limit signal penetration to one or two walls without degrading coverage.
  - Concrete and wood block walls limit signal penetration to three or four walls.
  - A signal can penetrate five or six walls constructed of drywall or wood.
  - A thick metal wall causes signals to reflect off, causing poor penetration.
  - A chain link fence or wire mesh spaced between 1 and 1 1/2 in. (2.5 and 3.8 cm) acts as a harmonic reflector that blocks a 2.4-GHz radio signal.
  - Install the antenna away from microwave ovens and 2-GHz cordless phones. These products can cause signal interference because they operate in the same frequency range as the device your antenna is connected to.

Antenna Installation

This antenna is designed to be mounted directly to the access point. For information about orienting the dipole antenna, see the hardware installation guide for your access point.

In addition to antenna orientation, wireless access point installation location with respect to all wireless clients plays a significant role in determining overall network performance. Clients at the furthest coverage points might have 10% to 50% of the bandwidth of clients close to it. Wireless network coverage in one area or location might need to be lowered to improve the performance of other clients.

Because antennas transmit and receive radio signals, their performance can be adversely affected by the surrounding environment including distance between access point and client, physical obstructions, or radio frequency (RF) interference.

Follow these guidelines to ensure the best possible performance:

Wherever possible, mount the AP HWIC and antenna where the wireless devices would be within sight and avoid physical obstructions. Barriers along the line of sight between client and access point will degrade the wireless radio signals. AP HWICs and antennas can be installed above floor level in office environments or near the ceiling for better performance.

Caution Install the AP HWIC and any antennas away from appliances that share the same frequency bands. Microwave ovens, cordless telephones, and security monitors can temporarily interfere with wireless performance.

Caution We recommend you avoid installing wireless antennas in or near rack-mounted installations that include networking equipment and computer servers whose radiated noise emissions can severely degrade radio performance.

Note If the desired installation site has a marginally acceptable level of radiated noise emissions, consider using a remote-mounted antenna, such as a wall-mount or ceiling-mount antenna, for better radio performance and coverage.

Communications, Services, and Additional Information

- To receive timely, relevant information from Cisco, sign up at Cisco Profile Manager.
- To get the business impact you're looking for with the technologies that matter, visit Cisco Services.
- To submit a service request, visit Cisco Support.
- To discover and browse secure, validated enterprise-class apps, products, solutions, and services, visit Cisco DevNet.
- To obtain general networking, training, and certification titles, visit Cisco Press.
- To find warranty information for a specific product or product family, access Cisco Warranty Finder.

Cisco Bug Search Tool

Cisco Bug Search Tool (BST) is a web-based tool that acts as a gateway to the Cisco bug tracking system that maintains a comprehensive list of defects and vulnerabilities in Cisco products and software. BST provides you with detailed defect information about your products and software.

Documentation Feedback

To provide feedback about Cisco technical documentation, use the feedback form available in the right pane of every online document.

Cisco Support Community

Cisco Support Community is a forum for you to ask and answer questions, share suggestions, and collaborate with your peers. Join the forum at https://supportforums.cisco.com/index.jspa.

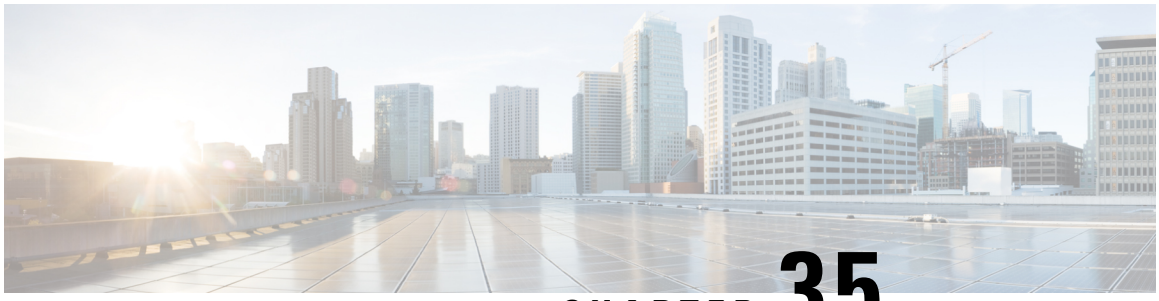

CHAPTER 35

Cisco Outdoor Omnidirectional Antenna for 2G/3G/4G Cellular (ANT-4G-OMNI-OUT-N)

This chapter contains the following:

- Overview, on page 575
- Technical Specifications, on page 575
- Radiation Patterns, on page 578
- Antenna Kit, on page 581
- General Safety Precautions, on page 582
- Guidelines to Achieving Optimal RF and Antenna Performance, on page 584
- Antenna Installation, on page 587
- Communications, Services, and Additional Information, on page 589

Overview

The Cisco Outdoor Omnidirectional Antenna for 2G/3G/4G Cellular antenna is designed to cover domestic LTE700/Cellular/PCS/AWS/MDS, WiMAX 2300/2500, and GSM900/GSM1800/UMTS/CBRS/LTE2600 bands. This document provides the antenna specifications and mounting instructions.

Caution Read the information in General Safety Warnings before installing or replacing antennas.

Technical Specifications

The Outdoor Omnidirectional antenna features the following:

- UV stable radome
- Mast mount bracket
- Multiple frequency ranges.

Important Cisco claims no support for FDD46 and TDD71

Figure 206: Outdoor Omnidirectional Antenna

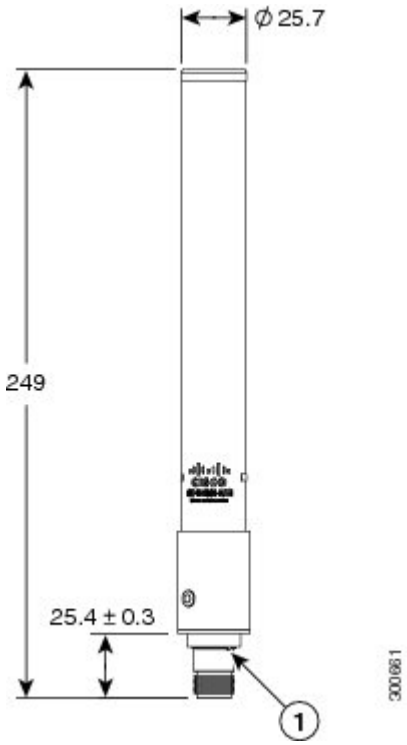

1	2x drain slot

RF Specifications

Specification	Description
Frequency ranges	698 to 862 MHz 824 to 894MHz 880 to 960MHz 1710 to 1880Mhz 1850 to 1990MHz 1920 to 2170MHz 2300 to 2400MHz 2400 to 2500MHz 2500 to 2690MHz 3400 to 3800 MHz

Specification	Description
Peak gain (dBi)	1.5 dBi (698 to 960MHz) 3.5 dBi (1710 to 2690MHz) 5.2 dBi (3400 to 3800MHz)
Efficiency	Antennas were designed and tested to high RF efficiency in all supported cellular bands. Detailed technical specifications can be obtained through your Cisco authorized partner or Cisco account representative.
Polarization	Vertical, Omnidirectional Radiation Pattern
Normal impedance	50 ohms
VSWR	< 2.5:1 (698 to 960 MHz) < 2:1 (1710 to 2690 MHz) < 2.5:1 (3400 to 3800 MHz)
Power	20 Watts

Mechanical Specifications

Specification	Description
Mount style	Mast mount, upright position only, connector on bottom (due to drain holes located only on antenna bottom)
Environment	Outdoor IP55 with drain holes
Connector	N-Type female
Antenna length (height)	9.8” x 1” (24.9 cm x 2.45 cm)
Weight	156g
Dimensions (height x outside dimensions)	9.8” x 1” (248 x 24.5 mm)
Operating temperature range	-40 to 158-degrees F (-40 to +70-degrees C)
Storage temperature	-40 to 185 degrees F (-40 to 85 degrees C)
Wind Rating	Operational 120 MPH / Survival 136 MPH
Radome	Polycarbonate, UV, white
Material substance compliance	ROHS compliant

Radiation Patterns

The following series of graphics show the antennas radiation patterns:

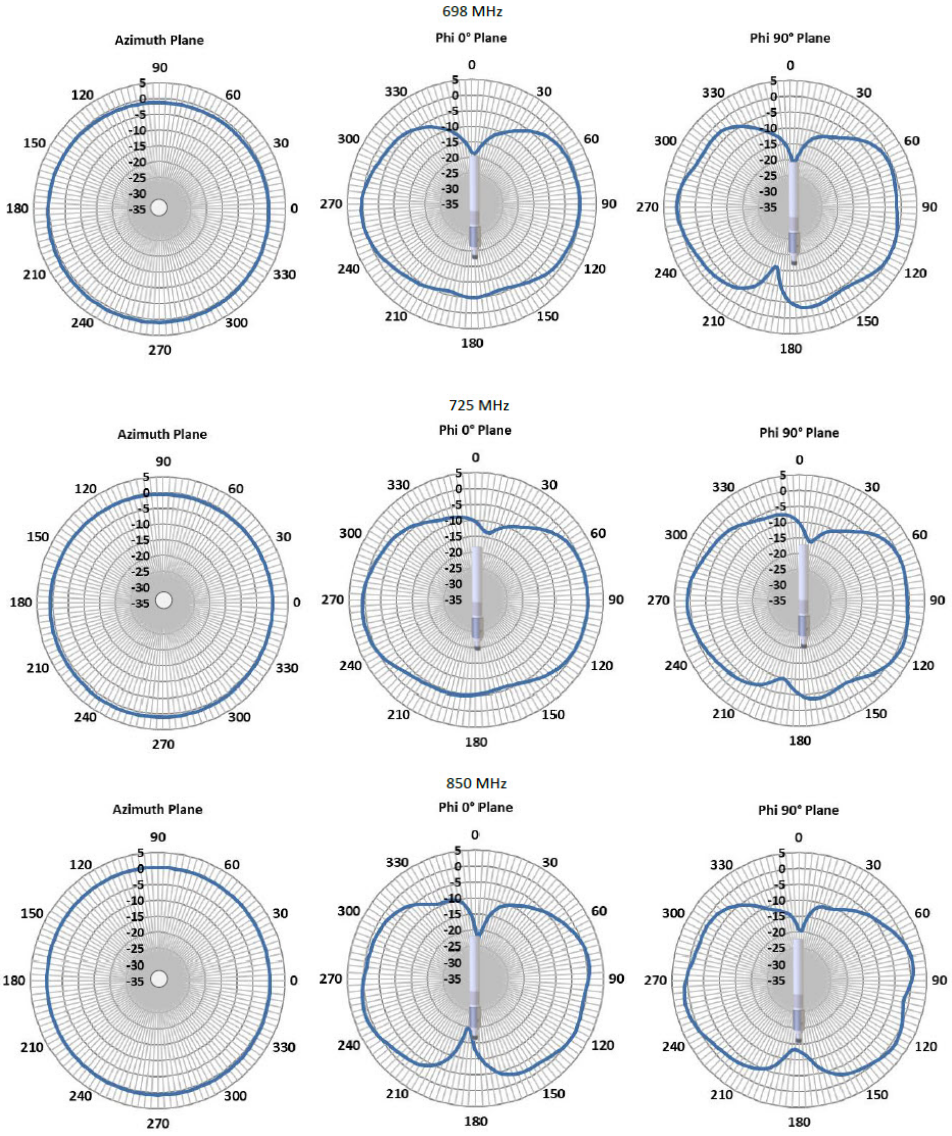

925 MHz

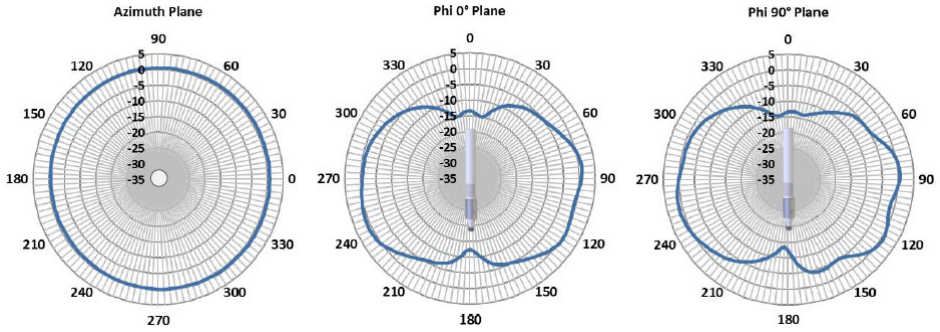

1730 MHz

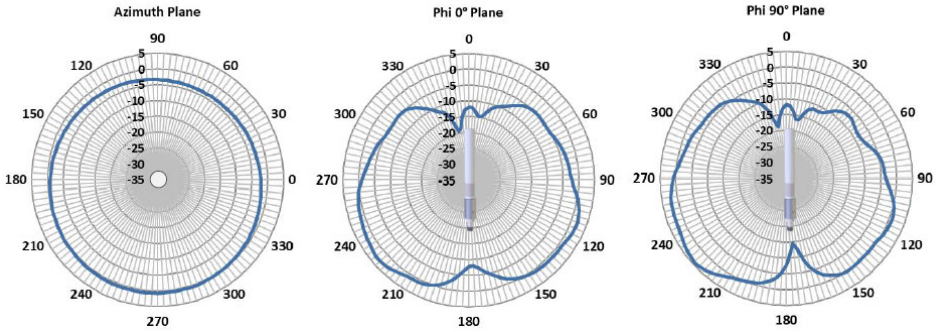

1930 MHz

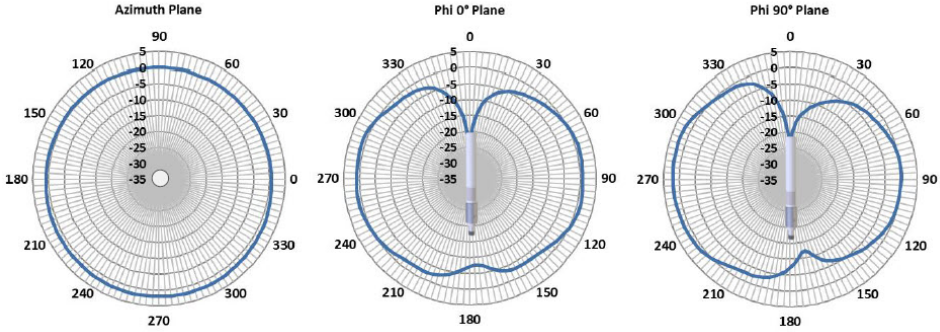

2140 MHz

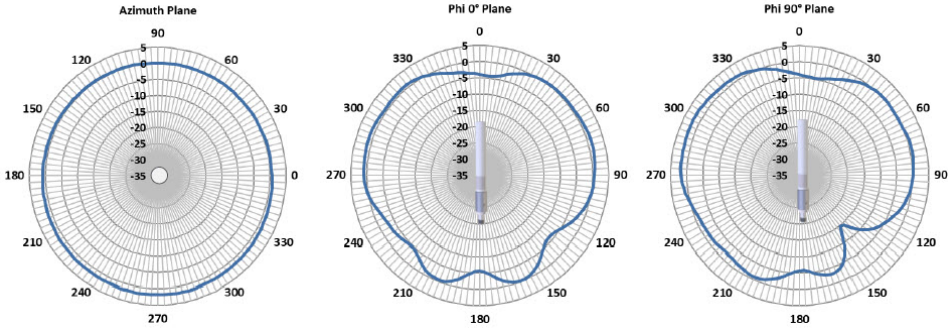

2300 MHz

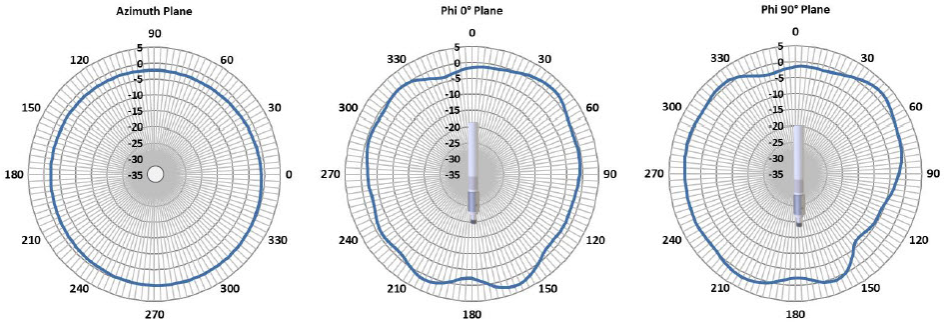

2457 MHz

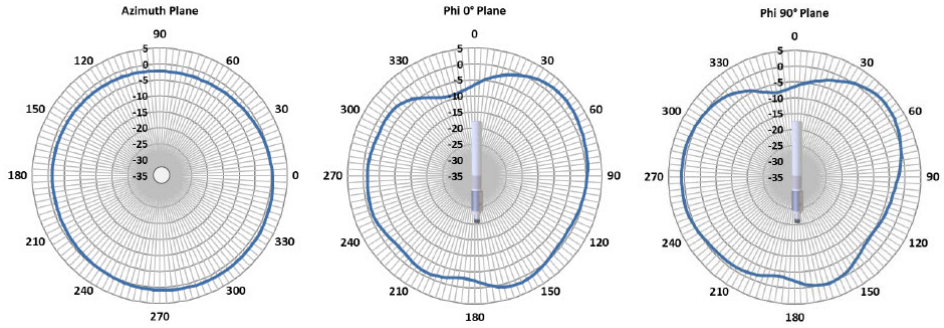

2510 MHz

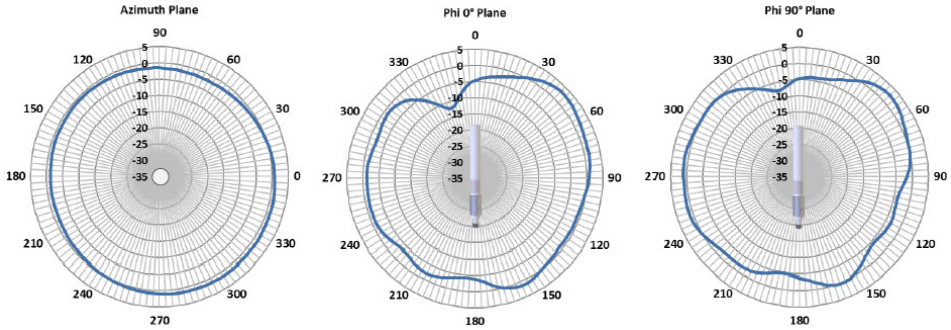

2600 MHz

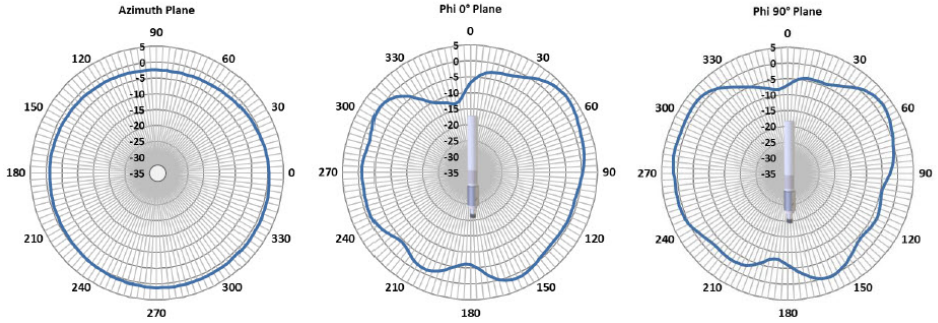

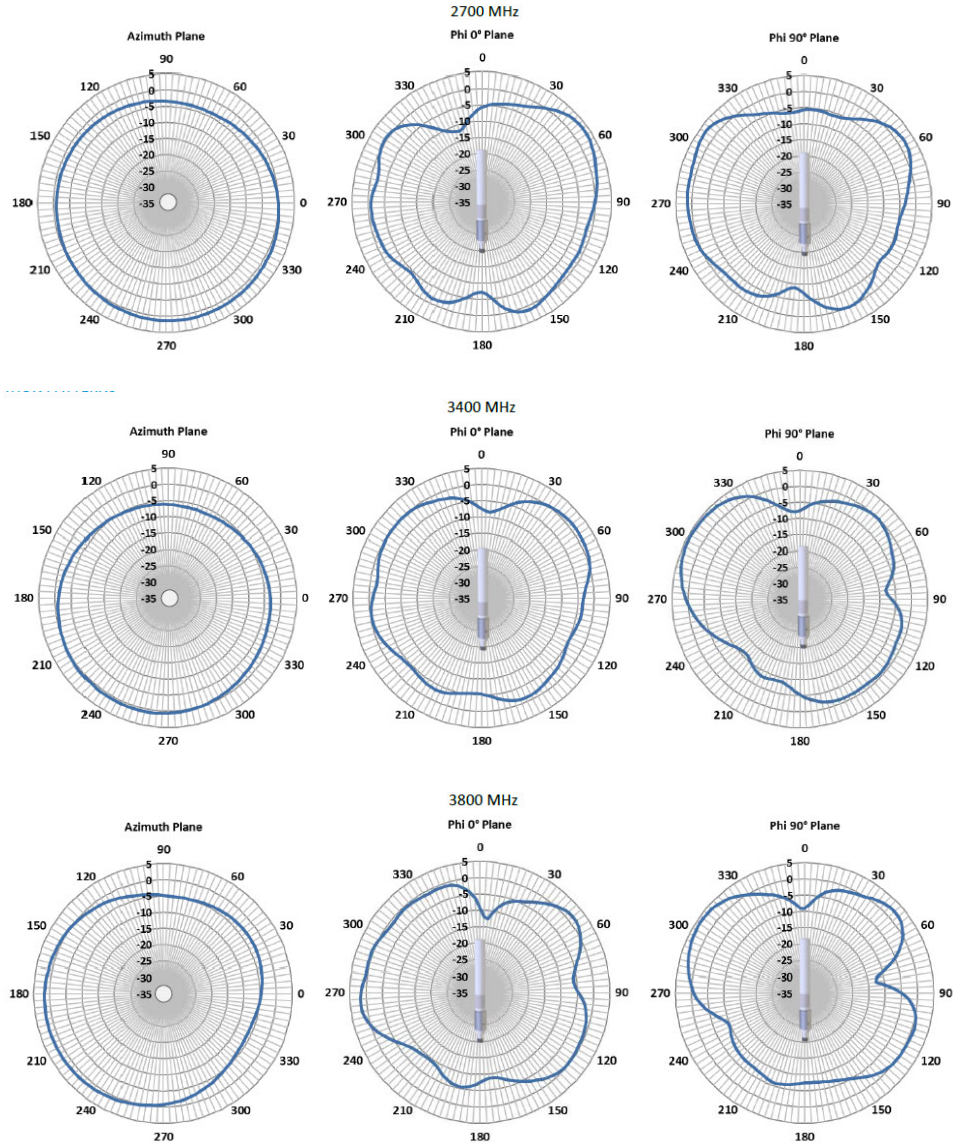

Antenna Kit

The contents of the multi-purpose integrated antenna are listed in the following table:

Table 55: Antenna Kit Contents

Quantity	Description
1	ANT-4G-OMNI-OUT-N Antenna
6	5/16"-18 SS hex nut
4	5/16"-18 SS split lock washer

Quantity	Description
1	5/16"-18 x 4-1/2" x 2-7/16" center SS U-bolt
2	5/16"-18 SS flat washer
2	Omni aluminum bracket
1	U-bolt clamp bracket

General Safety Precautions

Warning This warning symbol means danger. You are in a situation that could cause bodily injury. Before you work on any equipment, be aware of the hazards involved with electrical circuitry and be familiar with standard practices for preventing accidents. Use the statement number provided at the end of each warning to locate its translation in the translated safety warnings that accompanied this device. **Statement 1071**

Warning Do not work on the system or connect or disconnect cables during periods of lightning activity. **Statement 1001**

Warning Do not locate the outdoor antenna near overhead power lines or other electric light or power circuits, or where it can come into contact with such circuits. When installing the antenna, take extreme care not to come into contact with such circuits, as they may cause serious injury or death. For proper installation and grounding of the antenna, please refer to national and local codes (for example, U.S.:NFPA 70, National Electrical Code, Article 810, Canada:Canadian Electrical Code, Section 54). **Statement 1052**

Warning In order to comply with FCC radio frequency (RF) exposure limits, antennas should be located at a minimum of 7.9 inches (20 cm) or more from the body of all persons. **Statement 332**

Note For your safety, and to help you achieve a good installation, please read and follow these safety precautions.

Mast Mounted or Building Mounted Installations

The following instructions are common to most mast mounted or building mounted installations. For specific installation instructions for each antenna, see the antenna data-sheet and the router hardware installation guide.

- Find someone to help you—installing an antenna is often a two-person job.

- Select your installation site with safety, as well as performance, in mind. Remember that electric power lines and phone lines look alike. For your safety, assume that any overhead line can kill you.
- Contact your electric power company. Tell them your plans and ask them to come look at your proposed installation.
- Do not use a metal ladder.
- Do not work on a wet or windy day.
- Do dress properly—wear shoes with rubber soles and heels, rubber gloves, and a long-sleeved shirt or jacket.
- If the assembly starts to drop, move away from it and let it fall. Because the antenna, mast, cable, and metal guy wires are all excellent conductors of electrical current, even the slightest touch of any of these parts to a power line completes an electrical path through the antenna and the installer.
- If any part of the antenna system should come in contact with a power line, do not touch it or try to remove it yourself. Call your local power company to have it removed safely.
- If an accident should occur with the power lines, call for qualified emergency help immediately.
- Assemble your new antenna on the ground or a level surface at the installation site.
- Connect its coaxial cable while you are on the ground and attach the antenna to the mast.
- Ensure that the mast does not fall as you raise or remove it. Use a durable non-conductive rope secured at each two foot level as the mast is raised. Have an assistant tend the rope, ready to pull the mast clear of any hazards (such as power lines) should it begin to fall.
- Use the mounting bracket provided with the antenna.
- If the installation will use guy wires:
    - Install guy anchor bolts.
    - Estimate the length of guy wire and cut it before raising the mast.
    - Attach guy wires to a mast using guy rings.
    - In the case of a guyed (tall, thin mast) installation, you must have at least one assistant to hold the mast upright while the guy wires are attached and tightened to the anchor bolts.
- Attach a “DANGER” label at eye level on the mast.
- Install ground rods to remove any static electricity buildup and connect a ground wire to the mast and ground rod. Use ground rods designed for that purpose, not a spare piece of pipe.

Unused Antenna Ports

Port plugs must be installed in any unused antenna ports.

The weatherproof caps on the connectors protect the router interior from environmental elements including water, heat, cold, and dust. They are installed on unused ports before the router is shipped.

When you install a new antenna in a port with an N-connector:

- Chassis-mounted antennas—Remove the weather proof cap before installing a chassis-mounted antenna.

- External antennas—Remove weatherproof cap, then connect the supported Cisco cable to the connector.

Guidelines to Achieving Optimal RF and Antenna Performance

Antennas are a critical component of a wireless communication system. Selecting a suitable antenna, an optimal antenna location, or antenna site is essential for optimum performance of a wireless links.

This section covers general tips for optimizing RF performance of indoor and outdoor terrestrial radio systems in the 400-7125 MHz frequency range. Examples of terrestrial radio systems include 4G LTE, 5G NR, Wi-Fi, LoRa, LR-WPAN and similar. In this context GPS SPS would not be considered a terrestrial system as the signal is received from space, not from another terrestrial site.

Because the antenna transmits and receives radio signals over the air, overall RF performance of the link is susceptible to RF obstructions and common sources of RF interference that can reduce throughput and range of the system.

Follow these guidelines to optimize performance. When in doubt, consult a qualified RF professional, and check with your solution partner for specific recommendations.

Antenna Model Selection and Performance

Consider the following when planning your installation:

- When selecting the antenna, ensure that it covers the frequency ranges or frequency bands of interest, and that it has good RF parameters such as antenna efficiency, VSWR and suitable radiation pattern for every frequency range that your application will use with this antenna.
- Antenna pattern is important. Omni-directional antennas have lower gain, but allow communicating to devices in all azimuth directions. Directional antennas concentrate the beam in a specific direction, making them ideal for point to point communication.
- When a system has multiple RF ports for receive and / or transmit, as is the case for 4G LTE , 5G NR or Wi-Fi, it is highly recommended to populate all the RF ports with suitable antennas to take advantage of MIMO, rather than rely on a single port or single antenna to save on cost. Please see the MIMO section for a detailed description of MIMO benefits.
- For RF systems that support multiple RF ports and multiple RF standards such as LTE, Wi-Fi, and GPS: consider using a multi-element antenna that integrates multiple antennas under the same radome (cover). Doing so may reduce cost compared to deploying and mounting a discrete single port antenna for every RF port.
- For communication between fixed infrastructure devices, such as mesh nodes or a point-to-point backhaul link, each device should have an antenna with the same polarization. If communicating with mobile devices that might be randomly oriented, consider dual-polarized antennas, such as those with both vertical and horizontal or slant +45° and -45° polarized elements.

Antenna Environmental Specifications

The selected antenna must have suitable mechanical and environmental specifications for the environment where it will be deployed. For example, shock and vibration specifications for transportation, corrosion resistant construction for marine and oil and gas industries, or IP (ingress protection) rating for outdoor deployment. Indoor antennas are typically not suitable for harsh industrial environments. Please check with your system integrator for environmental requirements for your application.

Antenna Accessories and Mounting

Consider the following when planning your installation:

- Carefully consider what type of other RF accessories, besides antenna, such as RF cables, lightning arrestors or RF adapters may be required in your installations. It is best to minimize long RF cable runs due to RF signal losses in the cable. Thinner RF cables have more RF loss , thicker cables are less flexible and more expensive.
- Carefully consider how the antenna will be physically mounted, as this may affect antenna selection. For example, a stud mount mechanical mounting design is a better fit for mounting on top of an electrical cabinet than a mast mount antenna.
- For outdoor deployments, follow installation instructions for the antenna. It is good practice to keep protective covers on the radio's RF ports and any antenna or accessory RF ports until the moment the interfaces are mated. This reduces chances of contamination, trapping water or condensation inside the connector, or accidental damage to RF interfaces.

MIMO Performance and Arrays

MIMO systems deliver benefits of higher SNR, higher reliability and higher throughput compared to single antenna systems. In more technical terms, MIMO delivers array gain, diversity gain and multiplexing gain compared to single antenna.

- Array gain — Improvement in SNR (signal to noise ratio) by coherently combining signals from multiple antennas. For example, increasing SNR through beamforming techniques.
- Diversity gain — Improvement in reliability by mitigating deep fading or strong destructive EM wave interference. For example, in a two-antenna system, if one antenna is experiencing deep fading due to an EM destructive null at its location at a given instant, the other antenna is unlikely to have a null at the same instant, and the combined SNR stays at a reliable level. In contrast, a single antenna would see SNR oscillating between good SNR and very poor SNR and reliability would degrade.
- Multiplexing gain — Increase in system capacity or throughput by sending independent data over multiple spatial streams simultaneously. The number of streams cannot be more than the number of antennas. For example, to support three spatial streams, a minimum of three antennas is required. Often there may be additional antennas for diversity or redundancy, such as in the case of 4x4:3, or 4x4 MIMO with 3 spatial streams.

If deploying multiple single-element antennas for a MIMO system in an array, ensure sufficient spacing between the antennas. Omnidirectional elements should generally be at least one wavelength apart at the lowest operating frequency.

Consider the following:

- For Wi-Fi systems operating in the 2.4, 5, and/or 6 GHz bands, space elements at least 5 inches (12.5 cm) apart.
- For 4G LTE and 5G systems with the lowest operating frequency of 617 MHz , space elements at least 20 inches (50 cm) apart.
- Note that spacing between elements inside multi-element MIMO antennas is often less than one wavelength. However multi-element antennas are engineered with MIMO performance in mind, by providing antenna diversity through pattern, polarization, and isolation between MIMO elements.

Antenna siting and location

Consider the following when planning your installation:

- Plan antenna location ahead of time. Ideal location for an antenna is in LOS (line of sight) of the counterpart that it is trying to communicate with. Under LOS conditions the signals propagate directly between the two communication nodes, without relying on signal bouncing off a wall or other structure to reach the counterpart. This is sometimes not possible to achieve in practice, but it is a useful goal to keep in mind when optimizing antenna location.
- While it is good to keep RF cables short, it is most desirable for an antenna to be in the best location it can be to provide the desired coverage.
- For large deployments involving multiple units communicating with each other across a complex urban or industrial landscape, consider running an RF propagation modeling study to predict approximate simulated coverage maps and determine initial placement of the units. A propagation study may help reduce overall deployment cost by discovering and mitigating issues with RF coverage before the infrastructure is physically installed.
- Keep the antenna away from metal obstructions such as heating and air-conditioning ducts, large ceiling trusses, building superstructures, and major power cabling runs. One exception is if the antenna is designed to be mounted on a ground plane. If mounting on a ground plane, mount the antenna on a flat metal surface away from adjacent obstructions.
- It is strongly recommended not to install antennas directly on the router or access point (AP), unless the router or AP is specifically engineered to directly mount the antennas. Products that are engineered for direct mounting of antennas specifically address each of the below issues.
- Reasons to mount antennas away from the router include:
  - Router location may not be optimal location for antenna to communicate with the counterpart wirelessly, so router and antenna may need to be in different locations.
  - Router may have a clutter of Ethernet cable and power cables around it, which will obstruct antenna signal.
  - A number of routers, such as the IR1835, are modular. They have plug-in RF modules for Wi-Fi , 4G LTE or 5G NR such as WP-WIFI6, P-LTEAP18-GL, P-5GS6-GL. These modules have RF connectors spaced close together, and while it is mechanically possible to install four or five antennas directly attached, this will result in significant degradation to RF performance of antennas due to mutual de-tuning between closely spaced antennas. It is strongly recommended to install antennas away from the chassis in modular cases.
- If installing an antenna indoors, consider that the density and electromagnetic properties of the materials used in the building construction determines the number of walls the signal can pass through and still maintain adequate coverage.
  - Paper and vinyl walls have very little effect on signal penetration.
  - Solid and pre-cast concrete walls limit signal penetration to one or two walls without degrading coverage.
  - Concrete and wood block walls limit signal penetration to three or four walls.
  - A signal can penetrate five or six walls constructed of drywall or wood.
  - A thick metal wall causes signals to reflect off, causing poor penetration.

- A chain link fence or wire mesh spaced between 1 and 1 1/2 in. (2.5 and 3.8 cm) acts as a harmonic reflector that blocks a 2.4-GHz radio signal.
- Install the antenna away from microwave ovens and 2-GHz cordless phones. These products can cause signal interference because they operate in the same frequency range as the device your antenna is connected to.

Antenna Installation

The antenna installation includes the following procedures:

Tools and Equipment Required

In addition to the parts included in the antenna kit described in the previous section , you must provide the following tool to install the antenna on the router:

- A flathead screwdriver
- 3/4 in. open-end wrench

Note This list does not include the tools and equipment required to assemble and erect the tower, mast, or other structure you intend to mount your antenna on.

Installing the Antenna

The antenna is provided with a mounting kit consisting of a mounting bracket and hose clamp. This kit allows you to mount the antenna to masts from 1.25 inches (3.2 centimeters) to 2 inches (5.1 cm). Cisco recommends that a 1.5 inch (3.8 centimeter) or larger tubing mast be used.

The antenna is vertically polarized. Since the antenna has vertical gain, it is very important to mount the antenna in a vertical (not leaning) position for optimal performance.

Follow these steps to mount the antenna onto a mast:

Step 1 Place the connector end of the antenna through the hole in the antenna bracket.

Figure 207: Antenna Details

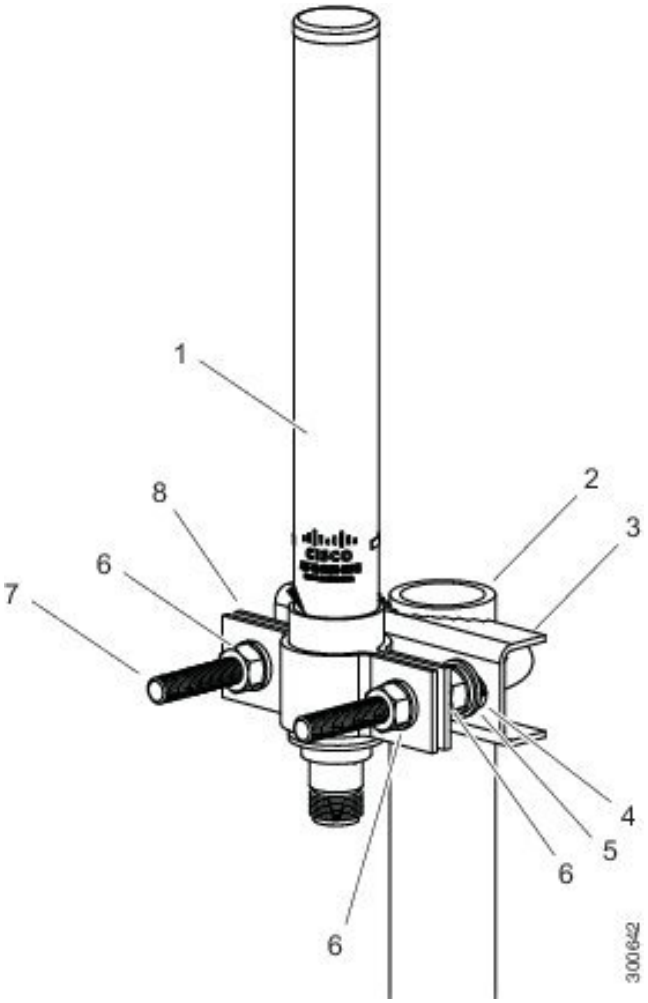

1	Outdoor omnidirectional antenna
2	Aluminum pipe/mast—31.8 mm to 54.0 mm mast diameter. (For optimum performance, mast height should sit lower than aluminum tube)
3	Antenna bracket
4	Flat washer
5	Lock washer
6	Hex nut
7	Carriage bolt
8	Pipe clamps

Step 2 Place the pipe clamps into the grooves on the bracket.

Step 3 Attach the bracket to the top of the mast. The top surface of the mounting mast must not exceed the top surface of the mounting bracket. Securely tighten hose clamps.

Step 4 Route the cable to the router and attach the cable to the antenna port of the router.

Communications, Services, and Additional Information

- To receive timely, relevant information from Cisco, sign up at Cisco Profile Manager.
- To get the business impact you're looking for with the technologies that matter, visit Cisco Services.
- To submit a service request, visit Cisco Support.
- To discover and browse secure, validated enterprise-class apps, products, solutions, and services, visit Cisco DevNet.
- To obtain general networking, training, and certification titles, visit Cisco Press.
- To find warranty information for a specific product or product family, access Cisco Warranty Finder.

Cisco Bug Search Tool

Cisco Bug Search Tool (BST) is a web-based tool that acts as a gateway to the Cisco bug tracking system that maintains a comprehensive list of defects and vulnerabilities in Cisco products and software. BST provides you with detailed defect information about your products and software.

Documentation Feedback

To provide feedback about Cisco technical documentation, use the feedback form available in the right pane of every online document.

Cisco Support Community

Cisco Support Community is a forum for you to ask and answer questions, share suggestions, and collaborate with your peers. Join the forum at https://supportforums.cisco.com/index.jspa.

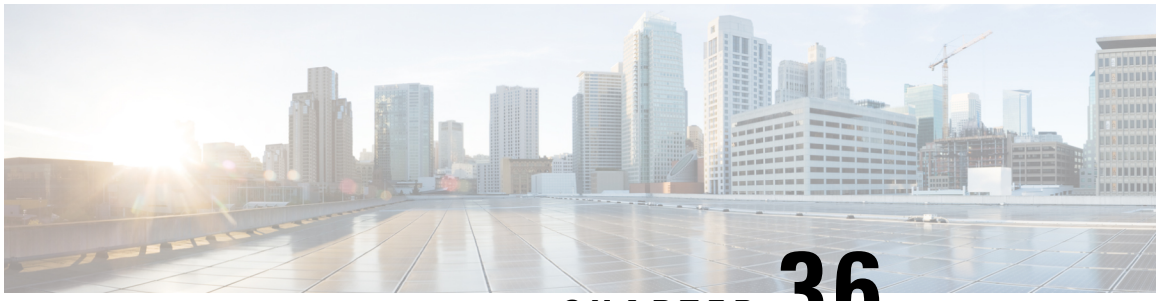

CHAPTER 36

Cisco Multiband Panel Outdoor 4G MIMO Antenna (ANT-4G-PNL-OUT-N)

This chapter contains the following:

- Overview, on page 591
- Technical Specifications, on page 592
- Antenna Radiation Patterns, on page 595
- General Safety Precautions, on page 608
- Guidelines to Achieving Optimal RF and Antenna Performance, on page 610
- Installing the Antenna, on page 613
- Communications, Services, and Additional Information, on page 615

Overview

This section describes the technical specifications and installation instructions for the Cisco Multiband Panel Outdoor 4G MIMO antenna, hereafter referred to as the antenna. The antenna is a dual-port antenna designed to cover cellular 4G bands. The supported bands are:

- LTE700/Cellular/PCS/AWS/MDS
- Global GSM900/GSM1800/UMTS/LTE2600
- WiMAX 2300/2500

Antenna Features

The antenna features:

- 3G, 4G, and WiMAX 2300/2500 operation
- 698–960, 1710–2700 MHz band support
- 4G directional panel, dual-polarized/MIMO
- Indoor or outdoor location
- Wall mount or mast mount installation
- Dual type N female connector

Antenna Model

ANT-4G-PNL-OUT-N - Cisco Multiband Panel Outdoor 4G MIMO antenna.

Antenna Assembly

Figure 208: Cisco ANT-4G-PNL-OUT-N Antenna



Technical Specifications

This section contains the following:

Environmental Specifications

Table 56: Environmental Specifications for the Cisco ANT-4G-PNL-OUT-N Antenna

Specification	Description
Operating temperature range	-40 to 158°F (-40 to 70°C)
Storage temperature range	-40 to 185°F (-40 to +85°C)

Mechanical Specifications

Table 57: Mechanical Specifications for the Cisco ANT-4G-PNL-OUT-N Antenna

Specification	Description
Mount style	Wall or mast mount
Location	Indoor or outdoor
Connector	Dual type N female direct connect
Dimensions (width x length x height)	11.61 x 11.61 x 3.23 in. (29.5 x 29.5 x 82 cm)
Weight	3.22 lbs (1.46 kg)
Wind rating	160 km/hr (93 mph)
IP rating	IP55
Radome	Polycarbonate, UV resistant, white
Material substance compliance	ROHS compliant

Power Specifications

Table 58: Power Specifications for the Cisco ANT-4G-PNL-OUT-N Antenna

Specification	Description
Maximum Voltage	2.0:1
Nominal Impedance	50 ohms
Maximum input power per port	10 watts

Radio Frequency Specifications

Table 59: Antenna Radio Frequency Specification

Specification	Description
Antenna type	4G directional panel, dual-polarized/MIMO
Frequency	• 698 to 960 MHz • 1710 to 2700 MHz
Nominal impedance	50 ohms
VSWR	2.0:1 Maximum
Gain	The gain values (dBi) for each frequency range are: • 698 to 960 MHz—8.0 to 10.0 dBi • 1710 to 2170 MHz—6.0 to 8.5 dBi • 2200 to 2400 MHz—6.5 to 9.5 dBi • 2500 to 2700 MHz—8.5 to 9.5 dBi
3 dB beamwidth (vertical plane)	• 55 to 70 degrees—698 to 960 MHz • 53 to 98 degrees—1710 to 2200 MHz • 60 to 70 degrees—2200 to 2500 MHz • 55 to 70 degrees—2500 to 2700 MHz
3 dB beamwidth (horizontal plane)	• 55 to 70 degrees—698 to 960 MHz • 50 to 90 degrees—1710 to 2200 MHz
F/B ratio	> 15 dB, typical 20 dB—698 to 960 MHz > 17 dB, typical 23 dB—1700 to 2700 MHz
Isolation	> 30 dB
Efficiency	Antennas were designed and tested to high RF efficiency in all supported cellular bands. Detailed technical specifications can be obtained through your Cisco authorized partner or Cisco account representative.
Polarization	Slant +/- 45 degrees
Radiation Pattern	Directional

Antenna Radiation Patterns

In the following graphics of the radiation patterns, the blue line denotes Port 1 and the red line denotes Port 2.

Figure 209: 698 MHz Antenna Radiation Pattern—Horizontal Plane

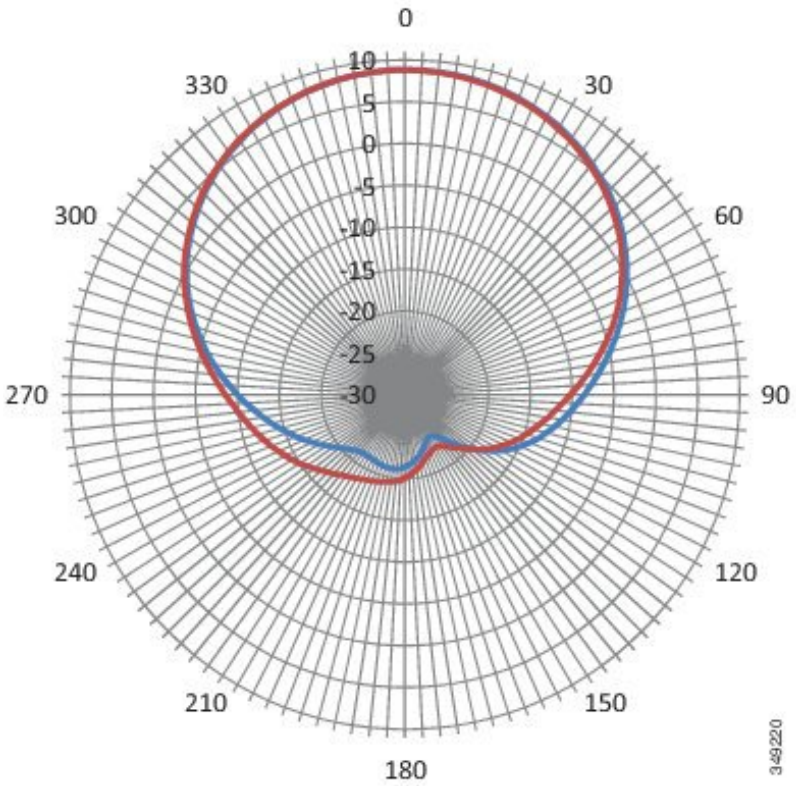

Figure 210: 698 MHz Antenna Radiation Pattern—Vertical Plane

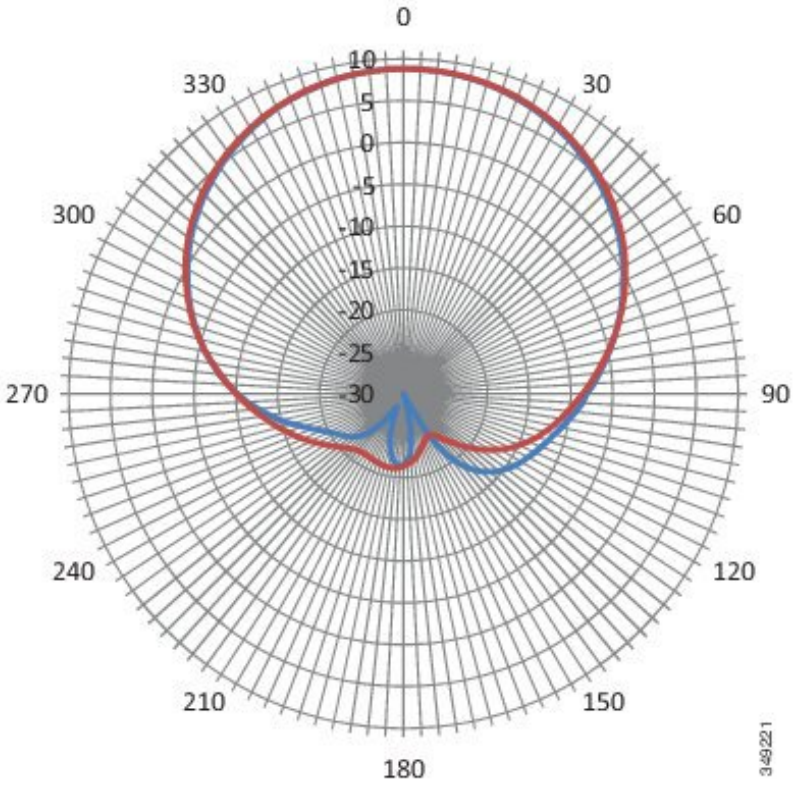

Figure 211: 880 MHz Antenna Radiation Pattern—Horizontal Plane

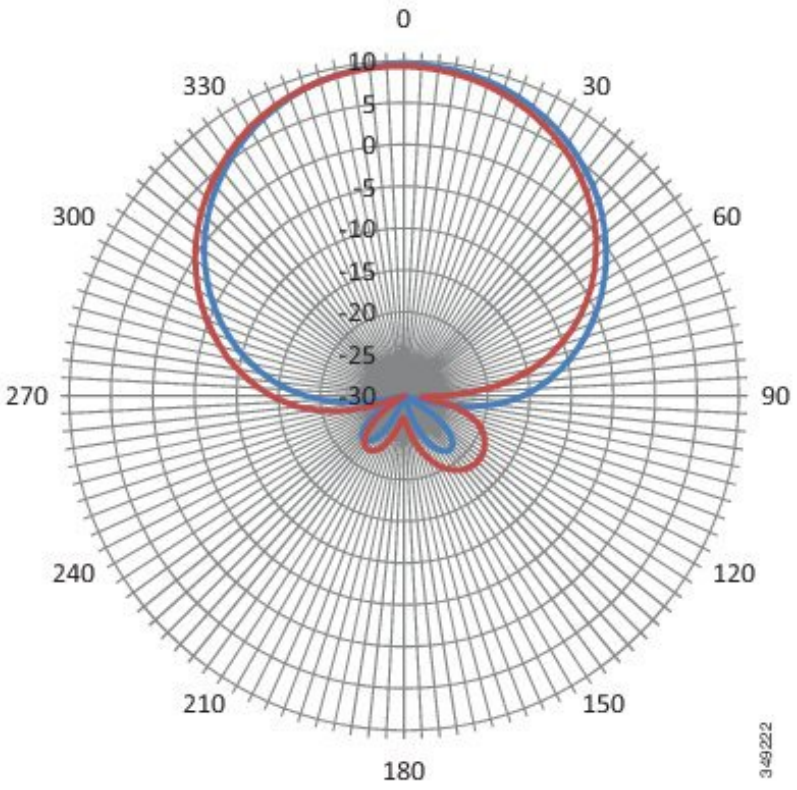

Figure 212: 880 MHz Antenna Radiation Pattern—Vertical Plane

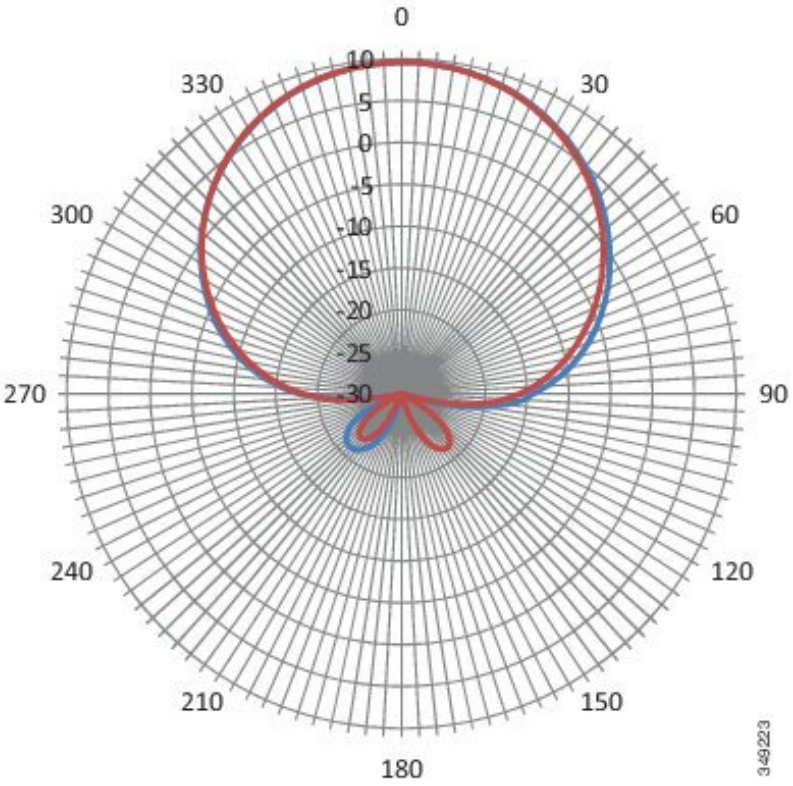

Figure 213: 960 MHz Antenna Radiation Pattern—Horizontal Plane

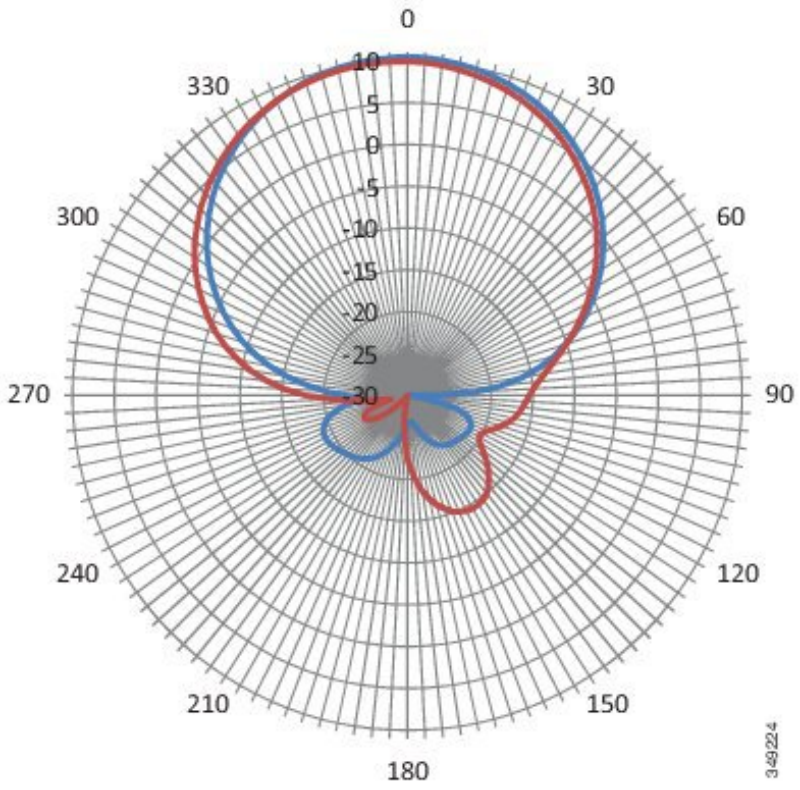

Figure 214: 960 MHz Antenna Radiation Pattern—Vertical Plane

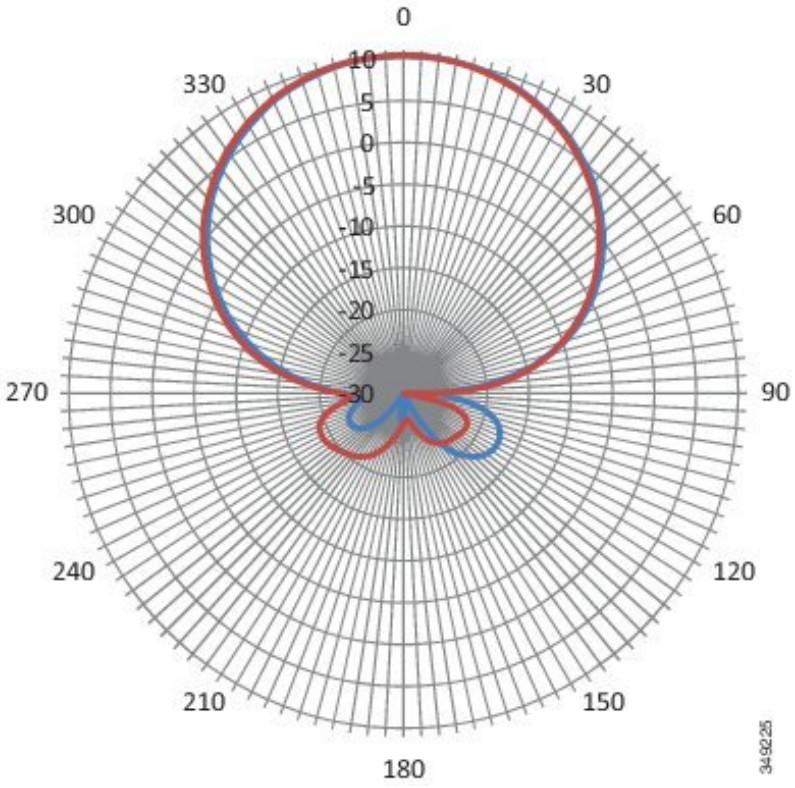

Figure 215: 1710 MHz Antenna Radiation Pattern—Horizontal Plane

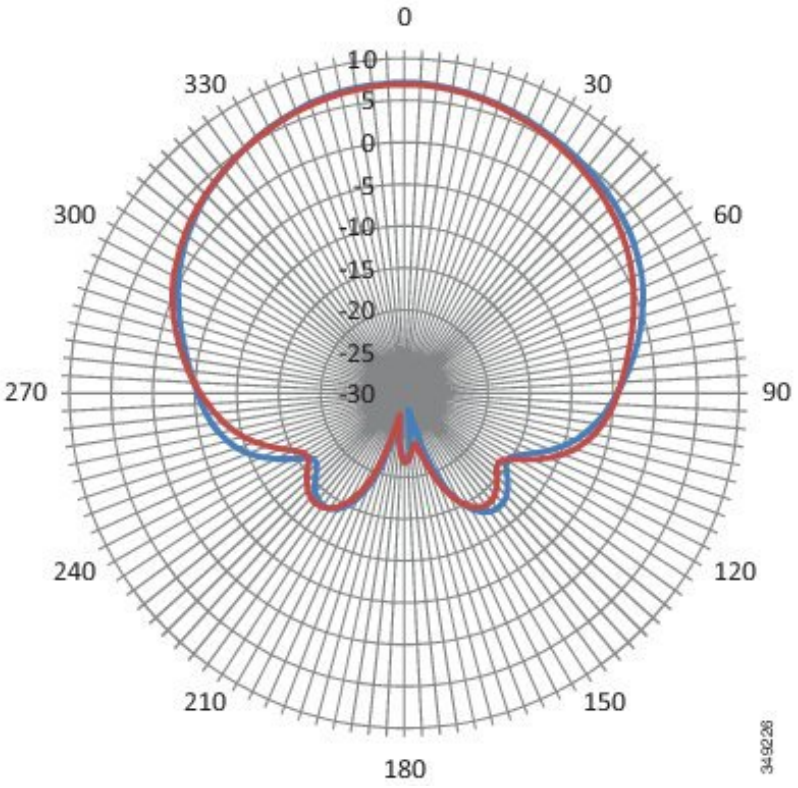

Figure 216: 1710 MHz Antenna Radiation Pattern—Vertical Plane

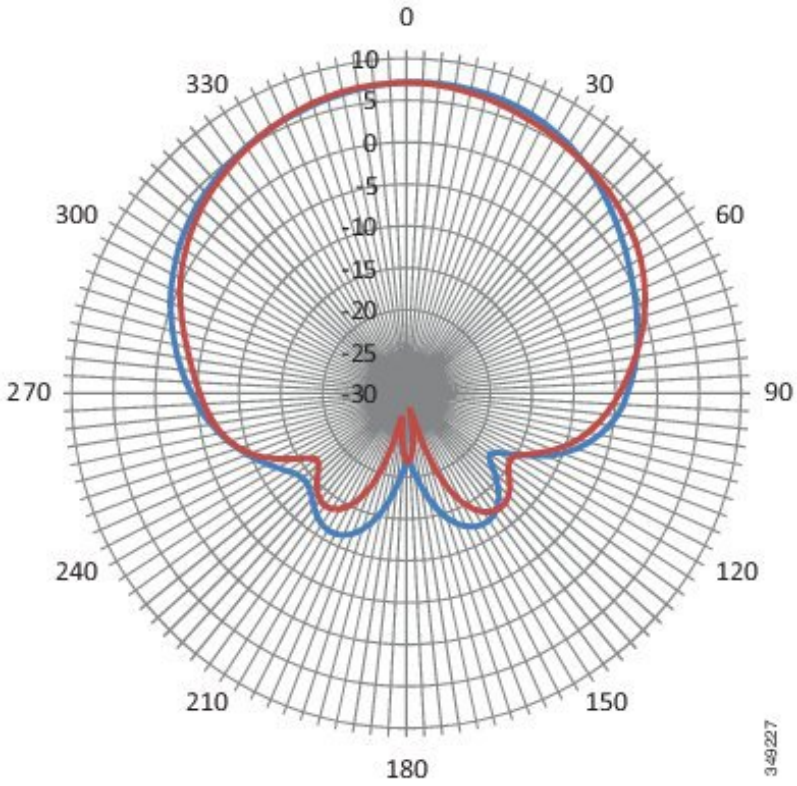

Figure 217: 1950 MHz Antenna Radiation Pattern—Horizontal Plane

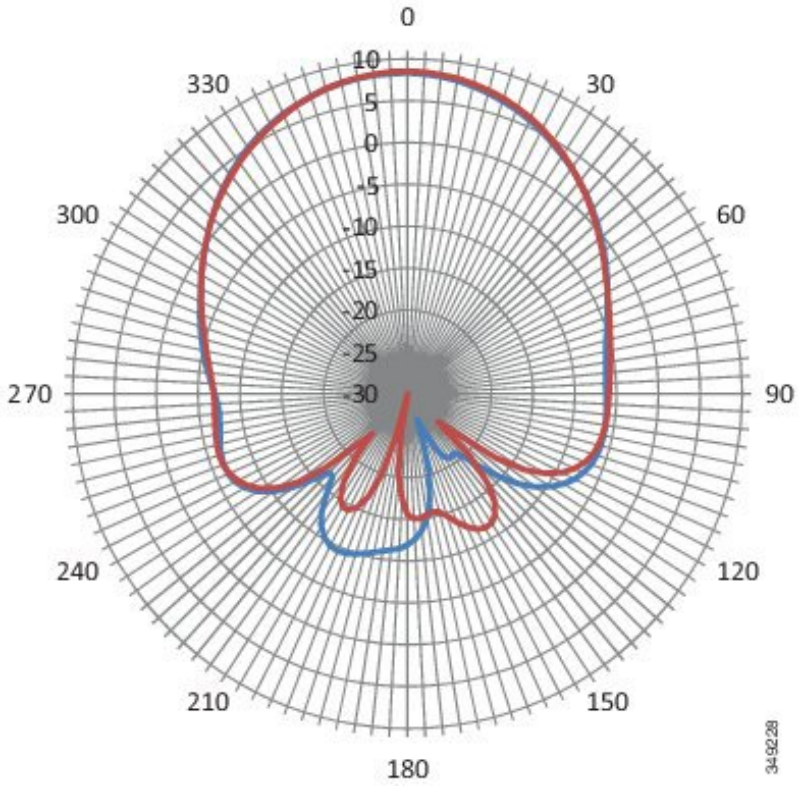

Figure 218: 1950 MHz Antenna Radiation Pattern—Vertical Plane

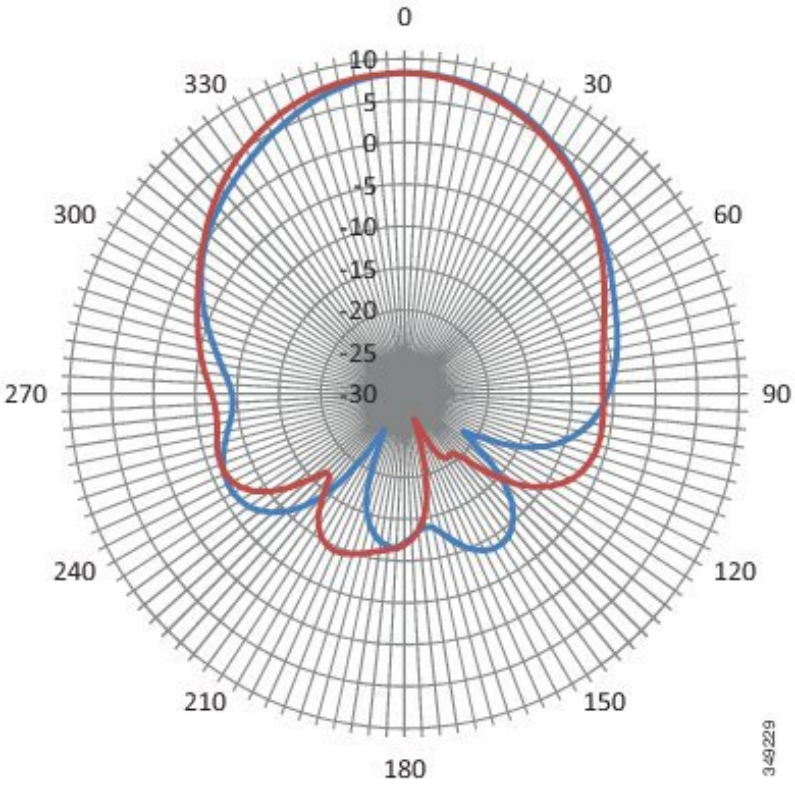

Figure 219: 2170 MHz Antenna Radiation Pattern—Horizontal Plane

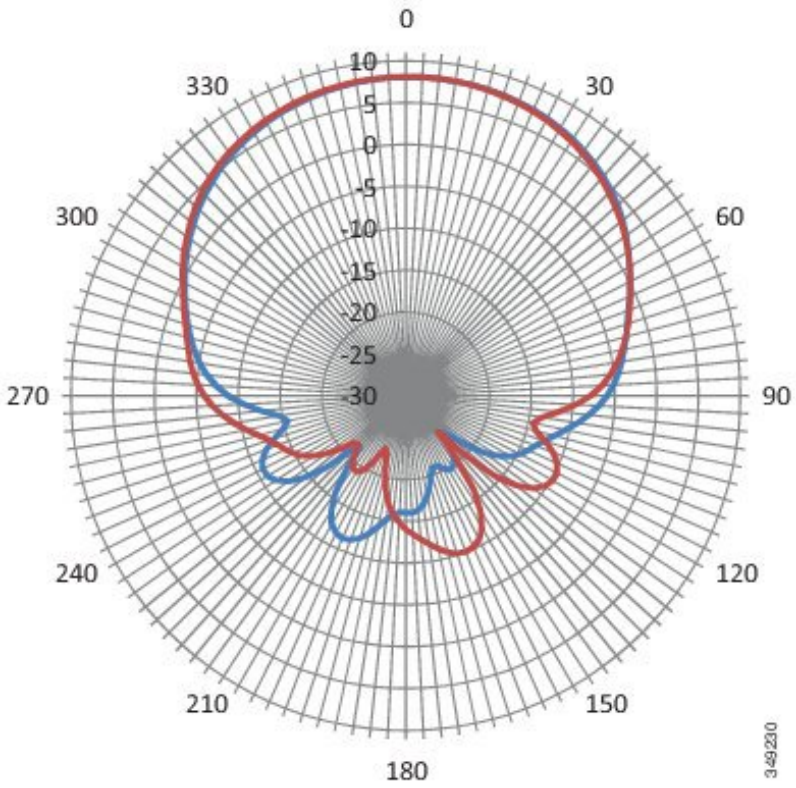

Figure 220: 2170 MHz Antenna Radiation Pattern—Vertical Plane

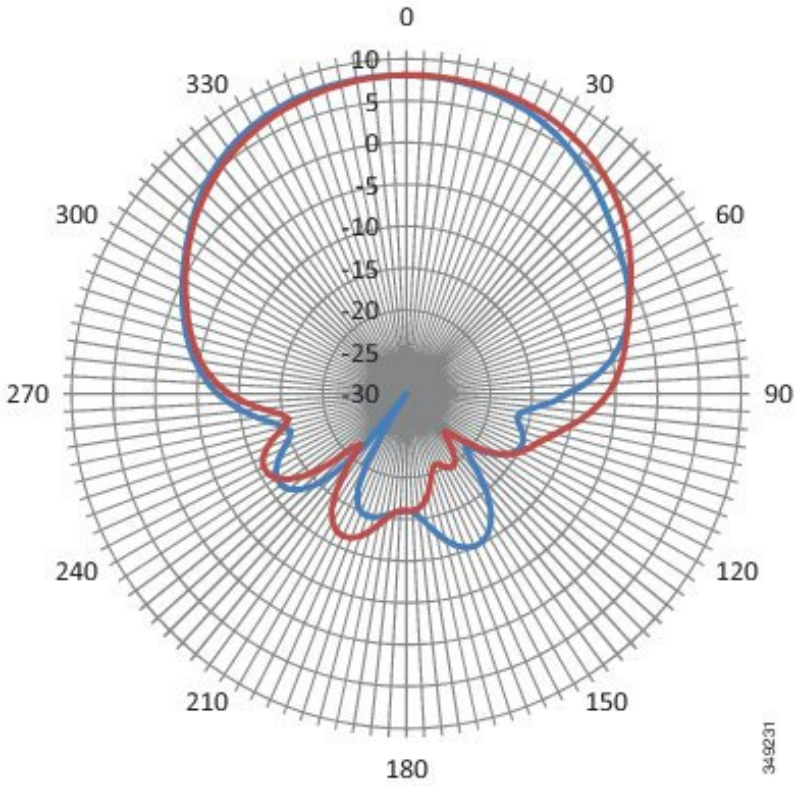

Figure 221: 2700 MHz Antenna Radiation Pattern—Horizontal Plane

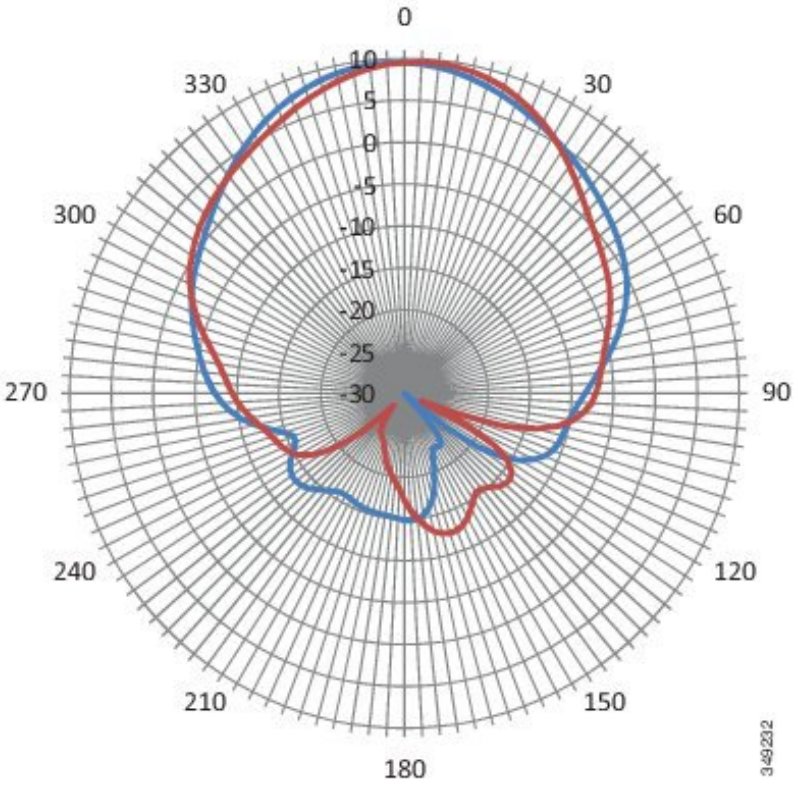

Figure 222: 2700 MHz Antenna Radiation Pattern—Vertical Plane

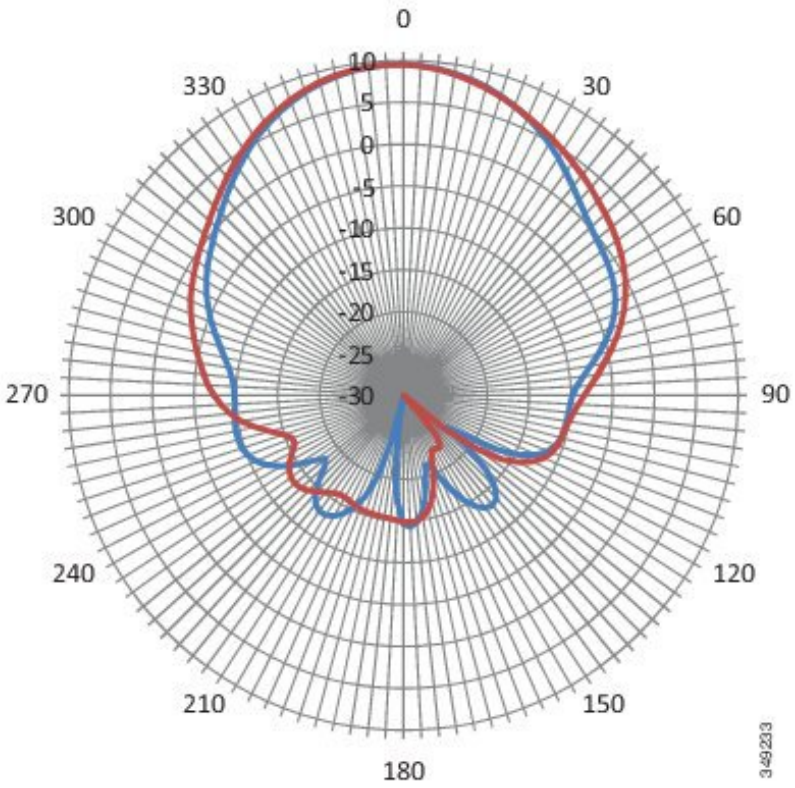

General Safety Precautions

Warning This warning symbol means danger. You are in a situation that could cause bodily injury. Before you work on any equipment, be aware of the hazards involved with electrical circuitry and be familiar with standard practices for preventing accidents. Use the statement number provided at the end of each warning to locate its translation in the translated safety warnings that accompanied this device. **Statement 1071**

Warning Do not work on the system or connect or disconnect cables during periods of lightning activity. **Statement 1001**

Warning Do not locate the outdoor antenna near overhead power lines or other electric light or power circuits, or where it can come into contact with such circuits. When installing the antenna, take extreme care not to come into contact with such circuits, as they may cause serious injury or death. For proper installation and grounding of the antenna, please refer to national and local codes (for example, U.S.:NFPA 70, National Electrical Code, Article 810, Canada:Canadian Electrical Code, Section 54). **Statement 1052**

Warning In order to comply with FCC radio frequency (RF) exposure limits, antennas should be located at a minimum of 7.9 inches (20 cm) or more from the body of all persons. **Statement 332**

Note For your safety, and to help you achieve a good installation, please read and follow these safety precautions.

Mast Mounted or Building Mounted Installations

The following instructions are common to most mast mounted or building mounted installations. For specific installation instructions for each antenna, see the antenna data-sheet and the router hardware installation guide.

- Find someone to help you—installing an antenna is often a two-person job.
- Select your installation site with safety, as well as performance, in mind. Remember that electric power lines and phone lines look alike. For your safety, assume that any overhead line can kill you.
- Contact your electric power company. Tell them your plans and ask them to come look at your proposed installation.
- Do not use a metal ladder.
- Do not work on a wet or windy day.
- Do dress properly—wear shoes with rubber soles and heels, rubber gloves, and a long-sleeved shirt or jacket.
- If the assembly starts to drop, move away from it and let it fall. Because the antenna, mast, cable, and metal guy wires are all excellent conductors of electrical current, even the slightest touch of any of these parts to a power line completes an electrical path through the antenna and the installer.
- If any part of the antenna system should come in contact with a power line, do not touch it or try to remove it yourself. Call your local power company to have it removed safely.
- If an accident should occur with the power lines, call for qualified emergency help immediately.
- Assemble your new antenna on the ground or a level surface at the installation site.
- Connect its coaxial cable while you are on the ground and attach the antenna to the mast.
- Ensure that the mast does not fall as you raise or remove it. Use a durable non-conductive rope secured at each two foot level as the mast is raised. Have an assistant tend the rope, ready to pull the mast clear of any hazards (such as power lines) should it begin to fall.
- Use the mounting bracket provided with the antenna.
- If the installation will use guy wires:
    - Install guy anchor bolts.
    - Estimate the length of guy wire and cut it before raising the mast.
    - Attach guy wires to a mast using guy rings.
    - In the case of a guyed (tall, thin mast) installation, you must have at least one assistant to hold the mast upright while the guy wires are attached and tightened to the anchor bolts.

- Attach a “DANGER” label at eye level on the mast.
- Install ground rods to remove any static electricity buildup and connect a ground wire to the mast and ground rod. Use ground rods designed for that purpose, not a spare piece of pipe.

Unused Antenna Ports

Port plugs must be installed in any unused antenna ports.

The weatherproof caps on the connectors protect the router interior from environmental elements including water, heat, cold, and dust. They are installed on unused ports before the router is shipped.

When you install a new antenna in a port with an N-connector:

- Chassis-mounted antennas—Remove the weather proof cap before installing a chassis-mounted antenna.
- External antennas—Remove weatherproof cap, then connect the supported Cisco cable to the connector.

Guidelines to Achieving Optimal RF and Antenna Performance

Antennas are a critical component of a wireless communication system. Selecting a suitable antenna, an optimal antenna location, or antenna site is essential for optimum performance of a wireless links.

This section covers general tips for optimizing RF performance of indoor and outdoor terrestrial radio systems in the 400-7125 MHz frequency range. Examples of terrestrial radio systems include 4G LTE, 5G NR, Wi-Fi, LoRa, LR-WPAN and similar. In this context GPS SPS would not be considered a terrestrial system as the signal is received from space, not from another terrestrial site.

Because the antenna transmits and receives radio signals over the air, overall RF performance of the link is susceptible to RF obstructions and common sources of RF interference that can reduce throughput and range of the system.

Follow these guidelines to optimize performance. When in doubt, consult a qualified RF professional, and check with your solution partner for specific recommendations.

Antenna Model Selection and Performance

Consider the following when planning your installation:

- When selecting the antenna, ensure that it covers the frequency ranges or frequency bands of interest, and that it has good RF parameters such as antenna efficiency, VSWR and suitable radiation pattern for every frequency range that your application will use with this antenna.
- Antenna pattern is important. Omni-directional antennas have lower gain, but allow communicating to devices in all azimuth directions. Directional antennas concentrate the beam in a specific direction, making them ideal for point to point communication.
- When a system has multiple RF ports for receive and / or transmit, as is the case for 4G LTE , 5G NR or Wi-Fi, it is highly recommended to populate all the RF ports with suitable antennas to take advantage of MIMO, rather than rely on a single port or single antenna to save on cost. Please see the MIMO section for a detailed description of MIMO benefits.
- For RF systems that support multiple RF ports and multiple RF standards such as LTE, Wi-Fi, and GPS: consider using a multi-element antenna that integrates multiple antennas under the same radome (cover).

Doing so may reduce cost compared to deploying and mounting a discrete single port antenna for every RF port.

- For communication between fixed infrastructure devices, such as mesh nodes or a point-to-point backhaul link, each device should have an antenna with the same polarization. If communicating with mobile devices that might be randomly oriented, consider dual-polarized antennas, such as those with both vertical and horizontal or slant +45° and -45° polarized elements.

Antenna Environmental Specifications

The selected antenna must have suitable mechanical and environmental specifications for the environment where it will be deployed. For example, shock and vibration specifications for transportation, corrosion resistant construction for marine and oil and gas industries, or IP (ingress protection) rating for outdoor deployment. Indoor antennas are typically not suitable for harsh industrial environments. Please check with your system integrator for environmental requirements for your application.

Antenna Accessories and Mounting

Consider the following when planning your installation:

- Carefully consider what type of other RF accessories, besides antenna, such as RF cables, lightning arrestors or RF adapters may be required in your installations. It is best to minimize long RF cable runs due to RF signal losses in the cable. Thinner RF cables have more RF loss , thicker cables are less flexible and more expensive.
- Carefully consider how the antenna will be physically mounted, as this may affect antenna selection. For example, a stud mount mechanical mounting design is a better fit for mounting on top of an electrical cabinet than a mast mount antenna.
- For outdoor deployments, follow installation instructions for the antenna. It is good practice to keep protective covers on the radio's RF ports and any antenna or accessory RF ports until the moment the interfaces are mated. This reduces chances of contamination, trapping water or condensation inside the connector, or accidental damage to RF interfaces.

MIMO Performance and Arrays

MIMO systems deliver benefits of higher SNR, higher reliability and higher throughput compared to single antenna systems. In more technical terms, MIMO delivers array gain, diversity gain and multiplexing gain compared to single antenna.

- Array gain — Improvement in SNR (signal to noise ratio) by coherently combining signals from multiple antennas. For example, increasing SNR through beamforming techniques.
- Diversity gain — Improvement in reliability by mitigating deep fading or strong destructive EM wave interference. For example, in a two-antenna system, if one antenna is experiencing deep fading due to an EM destructive null at its location at a given instant, the other antenna is unlikely to have a null at the same instant, and the combined SNR stays at a reliable level. In contrast, a single antenna would see SNR oscillating between good SNR and very poor SNR and reliability would degrade.
- Multiplexing gain — Increase in system capacity or throughput by sending independent data over multiple spatial streams simultaneously. The number of streams cannot be more than the number of antennas. For example, to support three spatial streams, a minimum of three antennas is required. Often there may be additional antennas for diversity or redundancy, such as in the case of 4x4:3, or 4x4 MIMO with 3 spatial streams.

If deploying multiple single-element antennas for a MIMO system in an array, ensure sufficient spacing between the antennas. Omnidirectional elements should generally be at least one wavelength apart at the lowest operating frequency.

Consider the following:

- For Wi-Fi systems operating in the 2.4, 5, and/or 6 GHz bands, space elements at least 5 inches (12.5 cm) apart.
- For 4G LTE and 5G systems with the lowest operating frequency of 617 MHz , space elements at least 20 inches (50 cm) apart.
- Note that spacing between elements inside multi-element MIMO antennas is often less than one wavelength. However multi-element antennas are engineered with MIMO performance in mind, by providing antenna diversity through pattern, polarization, and isolation between MIMO elements.

Antenna siting and location

Consider the following when planning your installation:

- Plan antenna location ahead of time. Ideal location for an antenna is in LOS (line of sight) of the counterpart that it is trying to communicate with. Under LOS conditions the signals propagate directly between the two communication nodes, without relying on signal bouncing off a wall or other structure to reach the counterpart. This is sometimes not possible to achieve in practice, but it is a useful goal to keep in mind when optimizing antenna location.
- While it is good to keep RF cables short, it is most desirable for an antenna to be in the best location it can be to provide the desired coverage.
- For large deployments involving multiple units communicating with each other across a complex urban or industrial landscape, consider running an RF propagation modeling study to predict approximate simulated coverage maps and determine initial placement of the units. A propagation study may help reduce overall deployment cost by discovering and mitigating issues with RF coverage before the infrastructure is physically installed.
- Keep the antenna away from metal obstructions such as heating and air-conditioning ducts, large ceiling trusses, building superstructures, and major power cabling runs. One exception is if the antenna is designed to be mounted on a ground plane. If mounting on a ground plane, mount the antenna on a flat metal surface away from adjacent obstructions.
- It is strongly recommended not to install antennas directly on the router or access point (AP), unless the router or AP is specifically engineered to directly mount the antennas. Products that are engineered for direct mounting of antennas specifically address each of the below issues.
- Reasons to mount antennas away from the router include:
  - Router location may not be optimal location for antenna to communicate with the counterpart wirelessly, so router and antenna may need to be in different locations.
  - Router may have a clutter of Ethernet cable and power cables around it, which will obstruct antenna signal.
  - A number of routers, such as the IR1835, are modular. They have plug-in RF modules for Wi-Fi , 4G LTE or 5G NR such as WP-WIFI6, P-LTEAP18-GL, P-5GS6-GL. These modules have RF connectors spaced close together, and while it is mechanically possible to install four or five antennas directly attached, this will result in significant degradation to RF performance of antennas due to

mutual de-tuning between closely spaced antennas. It is strongly recommended to install antennas away from the chassis in modular cases.

- If installing an antenna indoors, consider that the density and electromagnetic properties of the materials used in the building construction determines the number of walls the signal can pass through and still maintain adequate coverage.
  - Paper and vinyl walls have very little effect on signal penetration.
  - Solid and pre-cast concrete walls limit signal penetration to one or two walls without degrading coverage.
  - Concrete and wood block walls limit signal penetration to three or four walls.
  - A signal can penetrate five or six walls constructed of drywall or wood.
  - A thick metal wall causes signals to reflect off, causing poor penetration.
  - A chain link fence or wire mesh spaced between 1 and 1 1/2 in. (2.5 and 3.8 cm) acts as a harmonic reflector that blocks a 2.4-GHz radio signal.
  - Install the antenna away from microwave ovens and 2-GHz cordless phones. These products can cause signal interference because they operate in the same frequency range as the device your antenna is connected to.

Installing the Antenna

The antenna installation includes the following procedures:

Contents of the Antenna Kit

The antenna kit contains:

- 1 x Cisco ANT-4G-PNL-OUT-N antenna
- 1 x mounting bracket

Tools and Equipment Required

In addition to the parts included in the antenna kit described in the previous section, you must provide the following tool to install the antenna on the router:

- Phillips screwdriver
- Open-ended wrench
- Electric drill

Note This list does not include the tools and equipment required to assemble and erect the tower, mast, or other structure you intend to mount your antenna on.

Preparing the Antenna for Installation

Note Before mounting the antenna on a mast or wall:- the antenna must be attached to the mounting bracket.- the signal cable must be attached to the antenna.

To prepare the antenna for installation:

1. Attach the antenna to the mounting bracket.
2. To attach the signal cable to the antenna:
   a. Loosely hand-tighten the antenna nut so that the cable can be attached with ease.
   b. Attach the cable to the antenna.
   c. Hand tighten the N-connector to the antenna.
   d. Tighten the antenna nut securely after the cable is installed.
   e. Use weatherproof sealing tape (coax seal) at the connector junction. Start wrapping at the top of the antenna connector, wrap downward 3 times and end about 2 inches downward from the center of the connector junction. Then wrap upwards another 3 times to reach the top of the antenna connector.
3. Decide if the antenna is to be mounted on a wall or mast. Perform the following steps where relevant:
   a. If the antenna is going to be mast mounted, install the clamps provided in the mounting bracket. Align the antenna so the top of the metal bracket is even with or slightly above the top of the mast tubing.
   b. If the antenna is to be wall mounted, use the screws provided.
   c. Use both clamps and screws for extra security if required.

Mounting the Antenna

Follow these instructions to mount the antenna:

Step 1 Mark the desired location where you plan to mount the antenna and create a hole to receive the antenna.

Note The rubber washer is not required for ceiling tile installations.

Step 2 Make sure that the antenna is properly positioned, then tighten the washer and plastic nut to secure the antenna.

Connecting the Lightning Arrestor

To install a lightning-protection device, please refer to the appropriate Hardware Installation Procedures for the model of hardware you are installing.

Connecting the Antenna to the Router

To attach the router-end of the cable to your device, please refer to the appropriate Hardware Installation Procedures for the model of hardware you are installing.

Note Coaxial cable loses efficiency as the frequency increases, resulting in signal loss. The cable should be kept as short as possible because cable length also determines the amount of signal loss—the longer the cable length or run, the greater the loss).

Communications, Services, and Additional Information

- To receive timely, relevant information from Cisco, sign up at Cisco Profile Manager.
- To get the business impact you're looking for with the technologies that matter, visit Cisco Services.
- To submit a service request, visit Cisco Support.
- To discover and browse secure, validated enterprise-class apps, products, solutions, and services, visit Cisco DevNet.
- To obtain general networking, training, and certification titles, visit Cisco Press.
- To find warranty information for a specific product or product family, access Cisco Warranty Finder.

Cisco Bug Search Tool

Cisco Bug Search Tool (BST) is a web-based tool that acts as a gateway to the Cisco bug tracking system that maintains a comprehensive list of defects and vulnerabilities in Cisco products and software. BST provides you with detailed defect information about your products and software.

Documentation Feedback

To provide feedback about Cisco technical documentation, use the feedback form available in the right pane of every online document.

Cisco Support Community

Cisco Support Community is a forum for you to ask and answer questions, share suggestions, and collaborate with your peers. Join the forum at https://supportforums.cisco.com/index.jspa.

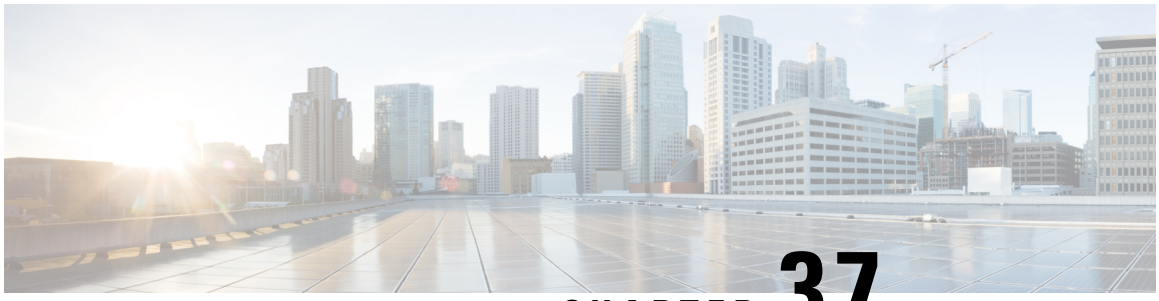

CHAPTER 37

Cisco Integrated 4G Low-profile Outdoor Saucer Antenna (ANT-4G-SR-OUT-TNC)

This chapter contains the following:

- Overview, on page 617
- Technical Specifications, on page 617
- Radiation Patterns, on page 619
- General Safety Precautions, on page 621
- Guidelines to Achieving Optimal RF and Antenna Performance, on page 622
- Antenna Installation, on page 626
- Communications, Services, and Additional Information, on page 627

Overview

This section describes the Cisco Integrated 4G Low-profile Outdoor Saucer Antenna. It supports frequencies of 698 to 960 MHz, 1575 MHz, and 1710 to 2700 MHz for the GSM, DCS, UMTS, and LTE/WiMAX frequency bands. In addition, this document provides the antenna specifications and mounting instructions of the antenna.

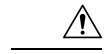

Caution Read all of the information before installing or replacing antennas

This chapter covers the following topics:

Technical Specifications

The Integrated 4G Low-profile Outdoor Saucer Antenna features the following:

- Applicable for both 3G and 4G solutions
- Domestic LTE 700 band and Global LTE 2600 band
- Domestic Cellular and Global GSM
- Weatherproof UV stable radome

- Performance optimized
- Excellent flame rating

Figure 223: Low-Profile Saucer Antenna



RF Specifications

Specification	Description
Frequency range	698 to 960 MHz 1448 to 1511 MHz 1710 to 2700 MHz
Peak gain w/15 foot cable	0.8 dBi (698 to 960 MHz) 0.5 dBI (1448 to 1511 MHz) 0.2 dBi (1710 to 2700 MHz)
Average efficiency w/15 foot cable	60 percent (698 to 960 MHz) 50 percent (1448 to 1511 MHz 40 percent (1710 to 2700 MHz)

Specification	Description
Polarization	Linear, vertical
Nominal impedance	50 ohms
VSWR (maximum)	2.0:1 (698 to 960 MHz) 1.9:1 (1448 to 1511 MHz) 2.0:1 (1710 to 2700 MHz)
H-plane (3 dB beamwidth)	Omnidirectional

Mechanical Specifications

Specification	Description
H-plane 3 dB beamwidth	Omnidirectional
Polarization	Linear, vertical
Nominal impedance	50 ohm
Power	3 watts
Cable	15 foot LMR 195
RF connector	TNC(m)
Mount Style	Stud mount, 5/8-18-NF mounting stud, mount on the roof or suitable flat surface
Radome	PC/ABS, UV stable, black
Material substance compliance	RoHS compliant
Operational temperature	-22 to 158 degrees F (-40 to 70 degrees C)
Storage temperature	-40 to 185 degrees F (-40 to 85 degrees C)
Environment	Outdoor, IP67, IK-08
Dimensions (ht x OD)	3.4 inches x 7.9 inches (87 mm x 200 mm)
Weight	0.75kg

Radiation Patterns

The following graphics show the radiation patterns of the saucer antenna.

Figure 224: Low-profile Saucer Antenna Radiation Patterns

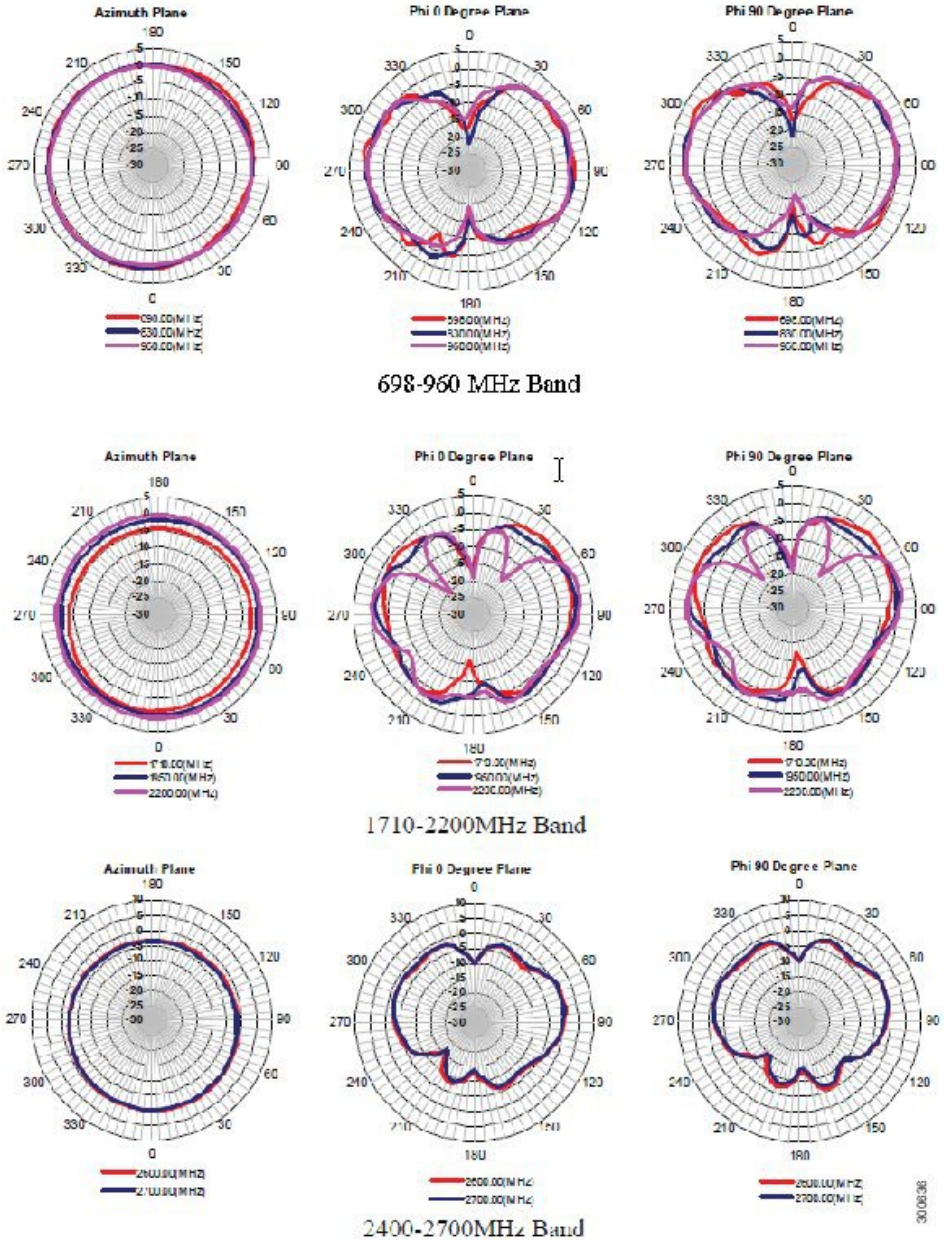

General Safety Precautions



Warning This warning symbol means danger. You are in a situation that could cause bodily injury. Before you work on any equipment, be aware of the hazards involved with electrical circuitry and be familiar with standard practices for preventing accidents. Use the statement number provided at the end of each warning to locate its translation in the translated safety warnings that accompanied this device. **Statement 1071**



Warning Do not work on the system or connect or disconnect cables during periods of lightning activity. **Statement 1001**



Warning Do not locate the outdoor antenna near overhead power lines or other electric light or power circuits, or where it can come into contact with such circuits. When installing the antenna, take extreme care not to come into contact with such circuits, as they may cause serious injury or death. For proper installation and grounding of the antenna, please refer to national and local codes (for example, U.S.:NFPA 70, National Electrical Code, Article 810, Canada:Canadian Electrical Code, Section 54). **Statement 1052**



Warning In order to comply with FCC radio frequency (RF) exposure limits, antennas should be located at a minimum of 7.9 inches (20 cm) or more from the body of all persons. **Statement 332**



Note For your safety, and to help you achieve a good installation, please read and follow these safety precautions.

Mast Mounted or Building Mounted Installations

The following instructions are common to most mast mounted or building mounted installations. For specific installation instructions for each antenna, see the antenna data-sheet and the router hardware installation guide.

- Find someone to help you—installing an antenna is often a two-person job.
- Select your installation site with safety, as well as performance, in mind. Remember that electric power lines and phone lines look alike. For your safety, assume that any overhead line can kill you.
- Contact your electric power company. Tell them your plans and ask them to come look at your proposed installation.
- Do not use a metal ladder.
- Do not work on a wet or windy day.
- Do dress properly—wear shoes with rubber soles and heels, rubber gloves, and a long-sleeved shirt or jacket.

- If the assembly starts to drop, move away from it and let it fall. Because the antenna, mast, cable, and metal guy wires are all excellent conductors of electrical current, even the slightest touch of any of these parts to a power line completes an electrical path through the antenna and the installer.
- If any part of the antenna system should come in contact with a power line, do not touch it or try to remove it yourself. Call your local power company to have it removed safely.
- If an accident should occur with the power lines, call for qualified emergency help immediately.
- Assemble your new antenna on the ground or a level surface at the installation site.
- Connect its coaxial cable while you are on the ground and attach the antenna to the mast.
- Ensure that the mast does not fall as you raise or remove it. Use a durable non-conductive rope secured at each two foot level as the mast is raised. Have an assistant tend the rope, ready to pull the mast clear of any hazards (such as power lines) should it begin to fall.
- Use the mounting bracket provided with the antenna.
- If the installation will use guy wires:
  - Install guy anchor bolts.
  - Estimate the length of guy wire and cut it before raising the mast.
  - Attach guy wires to a mast using guy rings.
  - In the case of a guyed (tall, thin mast) installation, you must have at least one assistant to hold the mast upright while the guy wires are attached and tightened to the anchor bolts.
- Attach a “DANGER” label at eye level on the mast.
- Install ground rods to remove any static electricity buildup and connect a ground wire to the mast and ground rod. Use ground rods designed for that purpose, not a spare piece of pipe.

Unused Antenna Ports

Port plugs must be installed in any unused antenna ports.

The weatherproof caps on the connectors protect the router interior from environmental elements including water, heat, cold, and dust. They are installed on unused ports before the router is shipped.

When you install a new antenna in a port with an N-connector:

- Chassis-mounted antennas—Remove the weather proof cap before installing a chassis-mounted antenna.
- External antennas—Remove weatherproof cap, then connect the supported Cisco cable to the connector.

Guidelines to Achieving Optimal RF and Antenna Performance

Antennas are a critical component of a wireless communication system. Selecting a suitable antenna, an optimal antenna location, or antenna site is essential for optimum performance of a wireless links.

This section covers general tips for optimizing RF performance of indoor and outdoor terrestrial radio systems in the 400-7125 MHz frequency range. Examples of terrestrial radio systems include 4G LTE, 5G NR, Wi-Fi,

LoRa, LR-WPAN and similar. In this context GPS SPS would not be considered a terrestrial system as the signal is received from space, not from another terrestrial site.

Because the antenna transmits and receives radio signals over the air, overall RF performance of the link is susceptible to RF obstructions and common sources of RF interference that can reduce throughput and range of the system.

Follow these guidelines to optimize performance. When in doubt, consult a qualified RF professional, and check with your solution partner for specific recommendations.

Antenna Model Selection and Performance

Consider the following when planning your installation:

- When selecting the antenna, ensure that it covers the frequency ranges or frequency bands of interest, and that it has good RF parameters such as antenna efficiency, VSWR and suitable radiation pattern for every frequency range that your application will use with this antenna.
- Antenna pattern is important. Omni-directional antennas have lower gain, but allow communicating to devices in all azimuth directions. Directional antennas concentrate the beam in a specific direction, making them ideal for point to point communication.
- When a system has multiple RF ports for receive and / or transmit, as is the case for 4G LTE , 5G NR or Wi-Fi, it is highly recommended to populate all the RF ports with suitable antennas to take advantage of MIMO, rather than rely on a single port or single antenna to save on cost. Please see the MIMO section for a detailed description of MIMO benefits.
- For RF systems that support multiple RF ports and multiple RF standards such as LTE, Wi-Fi, and GPS: consider using a multi-element antenna that integrates multiple antennas under the same radome (cover). Doing so may reduce cost compared to deploying and mounting a discrete single port antenna for every RF port.
- For communication between fixed infrastructure devices, such as mesh nodes or a point-to-point backhaul link, each device should have an antenna with the same polarization. If communicating with mobile devices that might be randomly oriented, consider dual-polarized antennas, such as those with both vertical and horizontal or slant +45° and -45° polarized elements.

Antenna Environmental Specifications

The selected antenna must have suitable mechanical and environmental specifications for the environment where it will be deployed. For example, shock and vibration specifications for transportation, corrosion resistant construction for marine and oil and gas industries, or IP (ingress protection) rating for outdoor deployment. Indoor antennas are typically not suitable for harsh industrial environments. Please check with your system integrator for environmental requirements for your application.

Antenna Accessories and Mounting

Consider the following when planning your installation:

- Carefully consider what type of other RF accessories, besides antenna, such as RF cables, lightning arrestors or RF adapters may be required in your installations. It is best to minimize long RF cable runs due to RF signal losses in the cable. Thinner RF cables have more RF loss , thicker cables are less flexible and more expensive.

- Carefully consider how the antenna will be physically mounted, as this may affect antenna selection. For example, a stud mount mechanical mounting design is a better fit for mounting on top of an electrical cabinet than a mast mount antenna.
- For outdoor deployments, follow installation instructions for the antenna. It is good practice to keep protective covers on the radio's RF ports and any antenna or accessory RF ports until the moment the interfaces are mated. This reduces chances of contamination, trapping water or condensation inside the connector, or accidental damage to RF interfaces.

MIMO Performance and Arrays

MIMO systems deliver benefits of higher SNR, higher reliability and higher throughput compared to single antenna systems. In more technical terms, MIMO delivers array gain, diversity gain and multiplexing gain compared to single antenna.

- Array gain — Improvement in SNR (signal to noise ratio) by coherently combining signals from multiple antennas. For example, increasing SNR through beamforming techniques.
- Diversity gain — Improvement in reliability by mitigating deep fading or strong destructive EM wave interference. For example, in a two-antenna system, if one antenna is experiencing deep fading due to an EM destructive null at its location at a given instant, the other antenna is unlikely to have a null at the same instant, and the combined SNR stays at a reliable level. In contrast, a single antenna would see SNR oscillating between good SNR and very poor SNR and reliability would degrade.
- Multiplexing gain — Increase in system capacity or throughput by sending independent data over multiple spatial streams simultaneously. The number of streams cannot be more than the number of antennas. For example, to support three spatial streams, a minimum of three antennas is required. Often there may be additional antennas for diversity or redundancy, such as in the case of 4x4:3, or 4x4 MIMO with 3 spatial streams.

If deploying multiple single-element antennas for a MIMO system in an array, ensure sufficient spacing between the antennas. Omnidirectional elements should generally be at least one wavelength apart at the lowest operating frequency.

Consider the following:

- For Wi-Fi systems operating in the 2.4, 5, and/or 6 GHz bands, space elements at least 5 inches (12.5 cm) apart.
- For 4G LTE and 5G systems with the lowest operating frequency of 617 MHz , space elements at least 20 inches (50 cm) apart.
- Note that spacing between elements inside multi-element MIMO antennas is often less than one wavelength. However multi-element antennas are engineered with MIMO performance in mind, by providing antenna diversity through pattern, polarization, and isolation between MIMO elements.

Antenna siting and location

Consider the following when planning your installation:

- Plan antenna location ahead of time. Ideal location for an antenna is in LOS (line of sight) of the counterpart that it is trying to communicate with. Under LOS conditions the signals propagate directly between the two communication nodes, without relying on signal bouncing off a wall or other structure to reach the counterpart. This is sometimes not possible to achieve in practice, but it is a useful goal to keep in mind when optimizing antenna location.

- While it is good to keep RF cables short, it is most desirable for an antenna to be in the best location it can be to provide the desired coverage.
- For large deployments involving multiple units communicating with each other across a complex urban or industrial landscape, consider running an RF propagation modeling study to predict approximate simulated coverage maps and determine initial placement of the units. A propagation study may help reduce overall deployment cost by discovering and mitigating issues with RF coverage before the infrastructure is physically installed.
- Keep the antenna away from metal obstructions such as heating and air-conditioning ducts, large ceiling trusses, building superstructures, and major power cabling runs. One exception is if the antenna is designed to be mounted on a ground plane. If mounting on a ground plane, mount the antenna on a flat metal surface away from adjacent obstructions.
- It is strongly recommended not to install antennas directly on the router or access point (AP), unless the router or AP is specifically engineered to directly mount the antennas. Products that are engineered for direct mounting of antennas specifically address each of the below issues.
- Reasons to mount antennas away from the router include:
    - Router location may not be optimal location for antenna to communicate with the counterpart wirelessly, so router and antenna may need to be in different locations.
    - Router may have a clutter of Ethernet cable and power cables around it, which will obstruct antenna signal.
    - A number of routers, such as the IR1835, are modular. They have plug-in RF modules for Wi-Fi , 4G LTE or 5G NR such as WP-WIFI6, P-LTEAP18-GL, P-5GS6-GL. These modules have RF connectors spaced close together, and while it is mechanically possible to install four or five antennas directly attached, this will result in significant degradation to RF performance of antennas due to mutual de-tuning between closely spaced antennas. It is strongly recommended to install antennas away from the chassis in modular cases.
- If installing an antenna indoors, consider that the density and electromagnetic properties of the materials used in the building construction determines the number of walls the signal can pass through and still maintain adequate coverage.
    - Paper and vinyl walls have very little effect on signal penetration.
    - Solid and pre-cast concrete walls limit signal penetration to one or two walls without degrading coverage.
    - Concrete and wood block walls limit signal penetration to three or four walls.
    - A signal can penetrate five or six walls constructed of drywall or wood.
    - A thick metal wall causes signals to reflect off, causing poor penetration.
    - A chain link fence or wire mesh spaced between 1 and 1 1/2 in. (2.5 and 3.8 cm) acts as a harmonic reflector that blocks a 2.4-GHz radio signal.
    - Install the antenna away from microwave ovens and 2-GHz cordless phones. These products can cause signal interference because they operate in the same frequency range as the device your antenna is connected to.

Antenna Installation

The antenna installation includes the following procedures:

Tools and Equipment Required

In addition to the parts included in the antenna kit, you must provide the following tool to install the antenna on the router:

- Phillips screwdriver
- Open-end wrench
- Drill
- Marker or pencil

Installing the Antenna

Follow these instructions to install the antenna:



Note The following example is for a CGR 1120 router with a CGM cellular module.

Step 1 Determine the installation location on the wall of the utility cabinet.

Step 2 Create the center hole to accommodate the threaded center rod and the three mounting holes of the saucer antenna. Secure the antenna onto the ceiling with the 3 screws using a Phillips #2 screwdriver.

Step 3 From inside the utility cabinet space, secure the antenna.

Figure 225: Antenna Detail

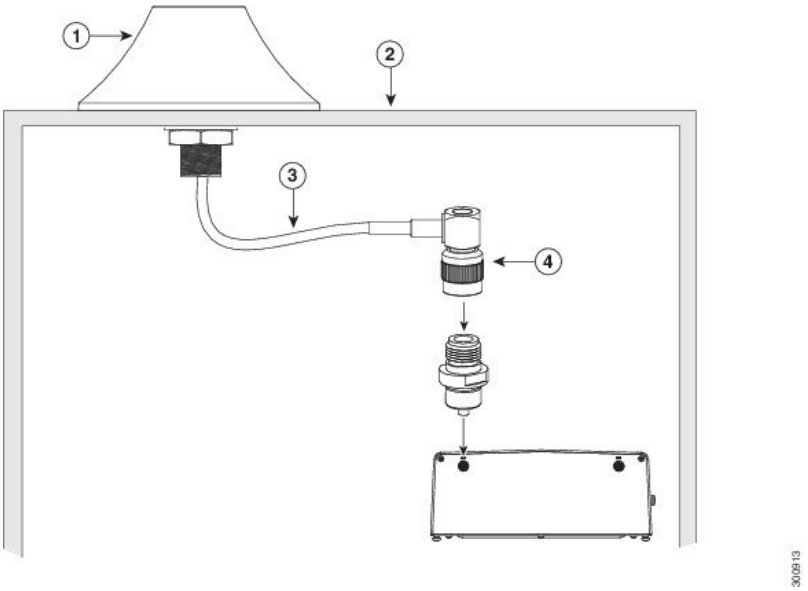

1	Saucer antenna
2	Wall of utility cabinet
3	LMR-195 cable
4	TNC (m) connector

Step 4 Connect the TNC (m) connector end of the antenna cable to the TNC(f)-to-QMA(m) connector adapter (ANT-ADPTR-Q-TNC).

Step 5 Attach the adapter to the QMA (f) connector of the CGR 1120 port.

Communications, Services, and Additional Information

- To receive timely, relevant information from Cisco, sign up at Cisco Profile Manager.
- To get the business impact you're looking for with the technologies that matter, visit Cisco Services.
- To submit a service request, visit Cisco Support.
- To discover and browse secure, validated enterprise-class apps, products, solutions, and services, visit Cisco DevNet.
- To obtain general networking, training, and certification titles, visit Cisco Press.
- To find warranty information for a specific product or product family, access Cisco Warranty Finder.

Cisco Bug Search Tool

Cisco Bug Search Tool (BST) is a web-based tool that acts as a gateway to the Cisco bug tracking system that maintains a comprehensive list of defects and vulnerabilities in Cisco products and software. BST provides you with detailed defect information about your products and software.

Documentation Feedback

To provide feedback about Cisco technical documentation, use the feedback form available in the right pane of every online document.

Cisco Support Community

Cisco Support Community is a forum for you to ask and answer questions, share suggestions, and collaborate with your peers. Join the forum at https://supportforums.cisco.com/index.jspa.

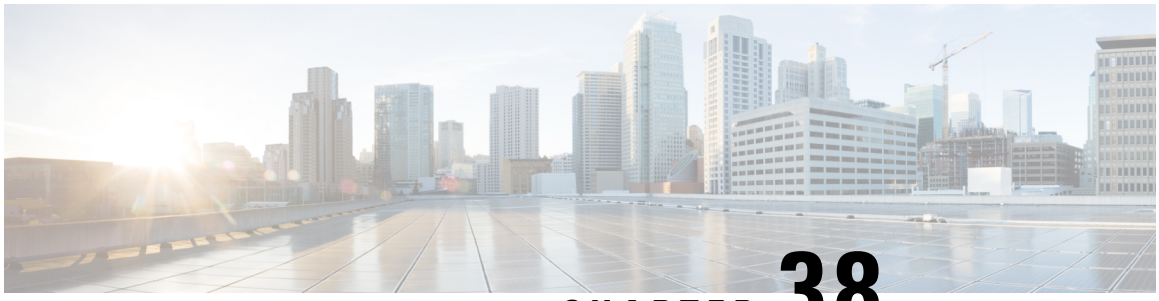

CHAPTER 38

Cisco Multi-element, 5-in-1, 5G (FR1)/LTE/GNSS (ANT-5-5G4G1-O)

-
- ANT-5-5G4G1-O Overview, on page 629
- Antenna Features, on page 630
- Antenna Assembly, on page 631
- Technical Specifications, on page 634
- Antenna Radiation Patterns, on page 636
- General Safety Precautions, on page 640
- Guidelines to Achieving Optimal RF and Antenna Performance, on page 641
- Installing the Antenna, on page 645
- Communications, Services, and Additional Information, on page 646

ANT-5-5G4G1-O Overview

This section describes the technical specifications and installation instructions for the Cisco Multi-element, 5-in-1, 5G (FR1)/LTE/GNSS (ANT-5-5G4G1-O), hereafter referred to as the antenna. The antenna features:

- Antenna Type - Multi-band elements on ground-plane
- IP67
- RoHS Compliant
- 4x Cellular (4G/5G)
- 1x GNSS

See the following figure for antenna port assignments:

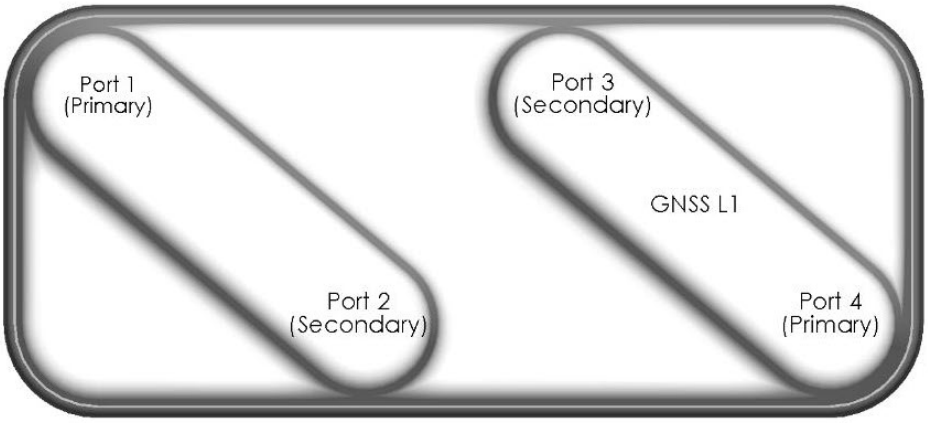

The antenna can be mounted on the roof of a vehicle or fixed structure. The antenna meets or exceeds a variety of environmental ruggedization specifications for transportation applications.

Antenna Features

The antenna features:

- 4x cellular ports: 617-960/1710-5925 MHz
- 5G (LTE), Dual Band
- Includes Band 71 (617- 698 MHz)
- CBRS Bands 42 and 48 (3400-3700 MHz)
- Omni radiation pattern
- Average power rating 45W
- 1 port Active GNSS L1 with low noise 30 dB amplifier
- 4x 5ft Low loss cables with SMA-Male Connectors (Fire retardant cable)
- 1x 7.5ft (GNSS) RG-174 cable with SMA-Male Connectors (Fire retardant cable)
- Average peak gain
    - 617-960 MHz: 2.0 dBi
    - 1710-5925 MHz: 5.8 dBi

Antenna Assembly

Figure 226: Antenna Photo

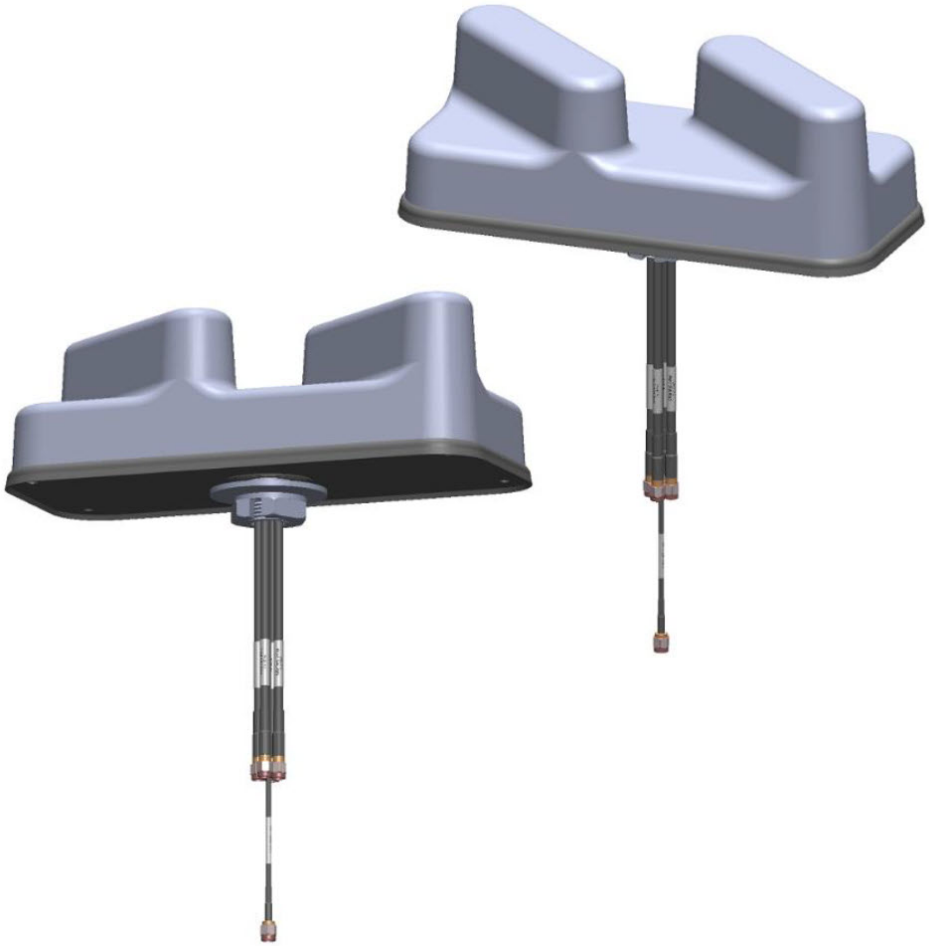

Figure 227: Mechanical Details 1

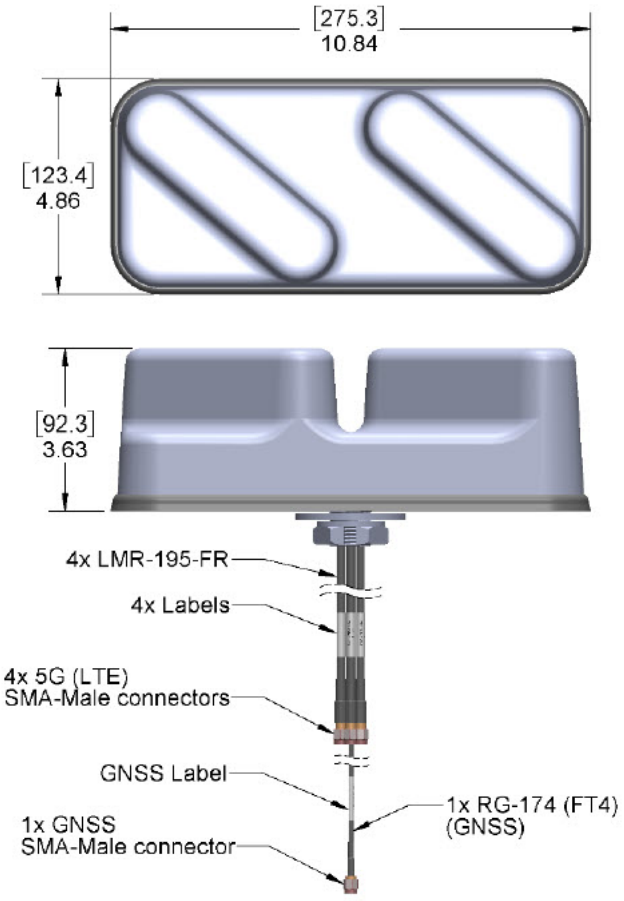

Figure 228: Mechanical Details 2

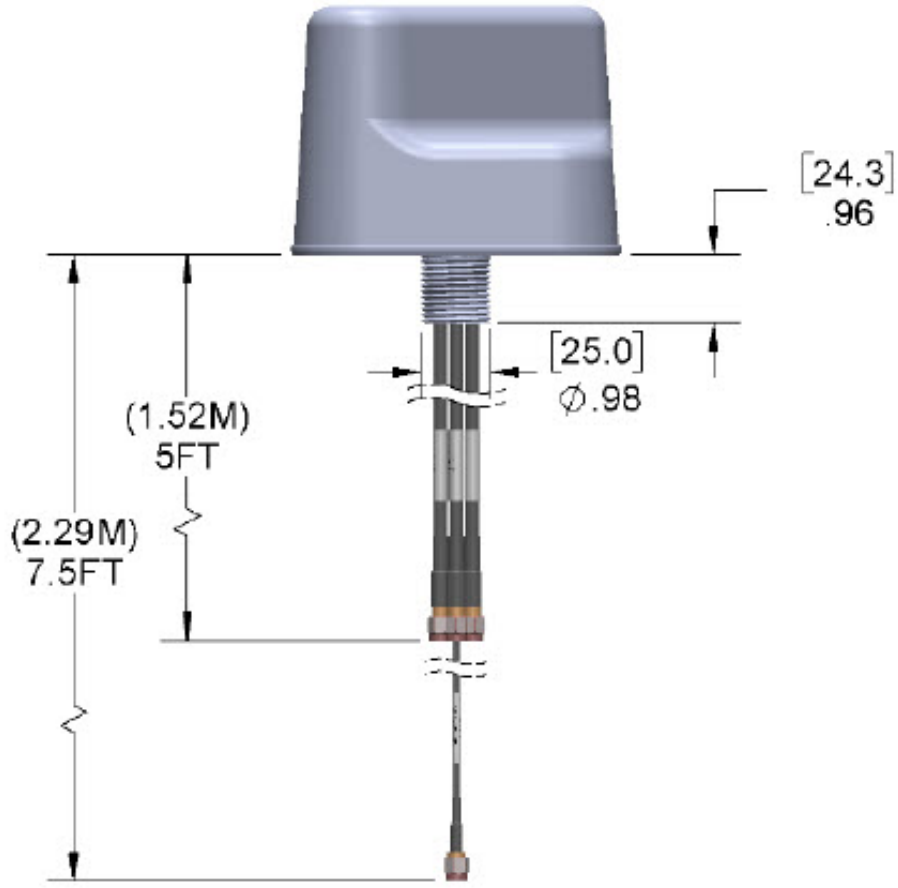

Figure 229: Mechanical Details 3

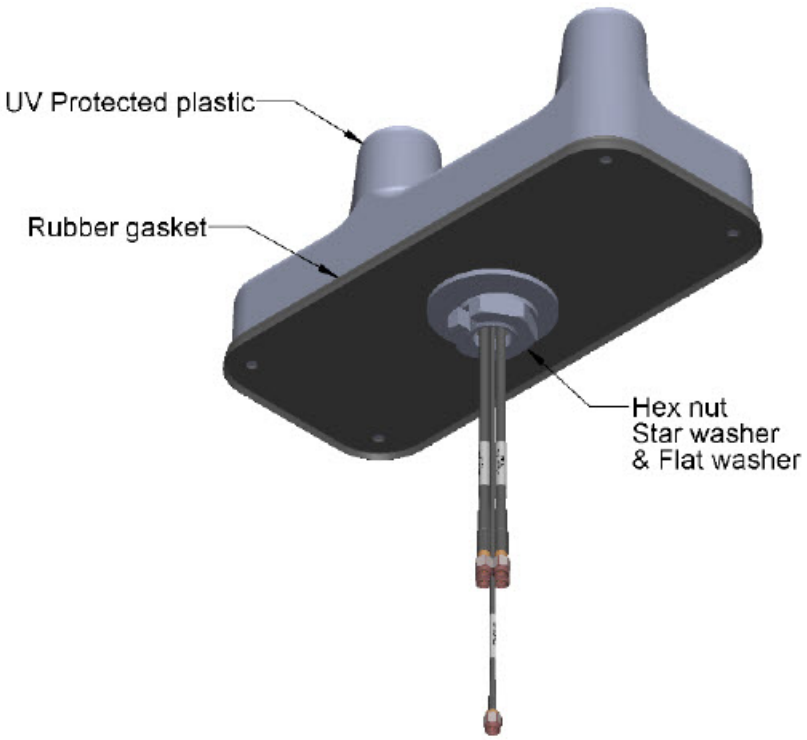

Note All dimensions are in millimeters [inches] unless explicitly stated otherwise in the drawing.

Technical Specifications

This section contains the following:

Mechanical Specifications

The following tables show the mechanical specifications for the antenna:

Elements	Cable	Connectors	Mounting Method
4G (LTE)/5G-FR1 (4x)	5ft (1.52m) LMR-195-FR	SMA Plug (Male)	Ø1.063” (27.0mm) Hole required
GNSS (L1) (1x)	7.5ft (2.29m) RG-174	SMA Plug (Male)	

Dimensions (L x W x H)	Weight	Housing Material	Temperature Range
10.84 x 4.86 x 3.63 inches 275.3 x 123.4 x 92.3 mm	1.89 lbs. 859.03 g	PC/ABS, UV Protected	-40°C to +85°C

Electrical Specifications

The following tables provide the electrical specifications for the antenna:

Nominal Impedance	50 Ohms
Power Withstanding	45W
Radiation Pattern	Omni
Polarization	Vertical

Table 60: Frequency Bands (LTE)

Frequency	617-960 MHz	1710-2170 MHz	2300-2700 MHz	3400-5925 MHz
VSWR	2.5:1	2:1	2:1	2:1
Average Peak Gain	2.1 dBi	5.1 dBi	5.0 dBi	5.5 dBi
Average Efficiency	49%	60%	60%	47%
Isolation (LTE 1-2 / LTE 3-4)	8	17	26	21
Isolation (LTE 1-3 / LTE 2-4)	15	24	28	30
Isolation (LTE 1-4)	15	35	37	34
HPBW Vertical Plane	85°	65°	46°	50°

Table 61: Frequency Bands (GNSS)

Frequency	1561.098 +/- 2.046 MHz	1575.42 +/- 1.023 MHz	1602.5625 +/- 4 MHz
VSWR	2:1	2:1	2:1
Gain – Radiating Element	-1 dBic	-2.5 dBic	-1.5 dBic

Table 62: Electrical Specifications (GNSS)

Polarization	LNA Gain	Noise Figure	Operating Voltage	Current Consumption
RHCP	30 +/- 2 dB	< 2.4 dB	3.3 – 5.0Vdc	< 11mA
Frequency	960 MHz	1710 MHz	2170 MHz	2400 MHz
Out of Band Rejection	> 65 dB	> 60 dB	> 65 dB	> 65 dB

Antenna Radiation Patterns

The following section illustrates the radiation patterns for the antenna.

VSWR vs Frequency Radiation Patterns

Figure 230: (LTE Ports 1-4) Measured W/2.3M (7.5ft) LMR-195 on Ø0.6M (2ft) GP

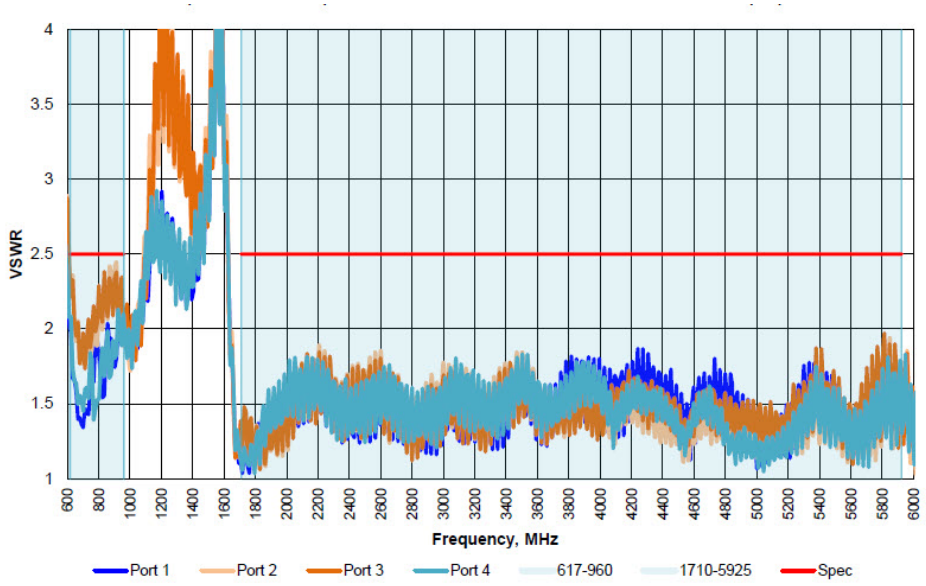

Peak Gain vs Frequency

Figure 231: (LTE Ports 1-4) Measured W/2.3M (7.5ft) LMR-195 on Ø0.6M (2ft) GP

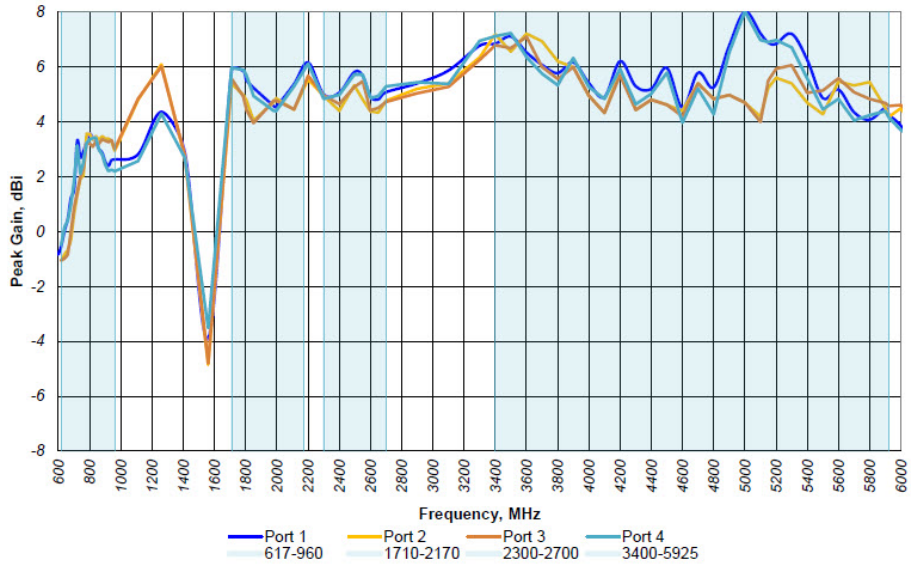

Efficiency vs Frequency

Figure 232: (LTE Ports 1-4) Measured W/2.3M (7.5ft) LMR-195 on Ø0.6M (2ft) GP

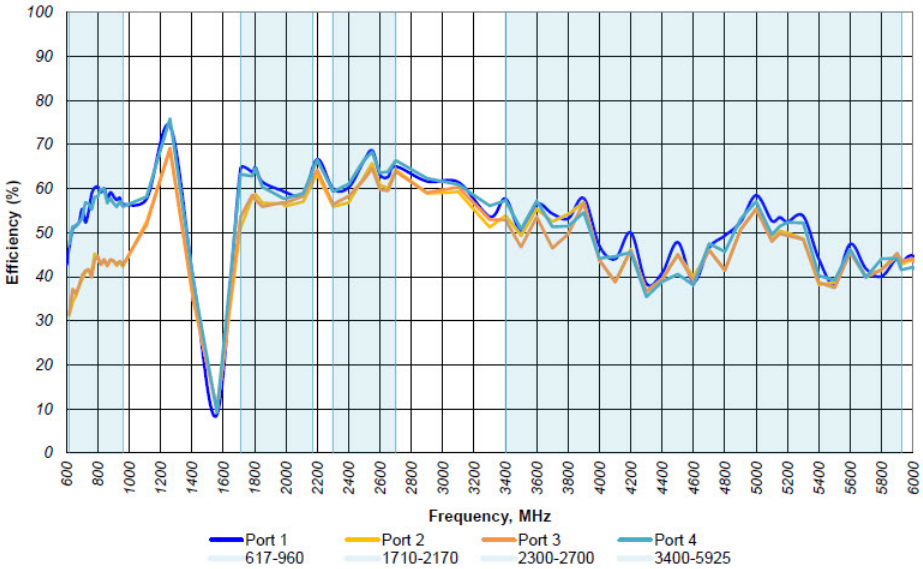

X Y Plane

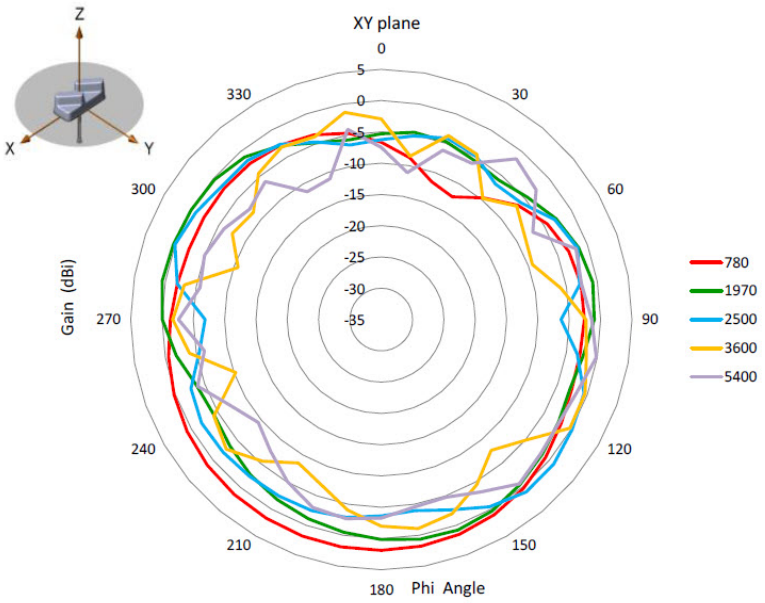

X Z Plane

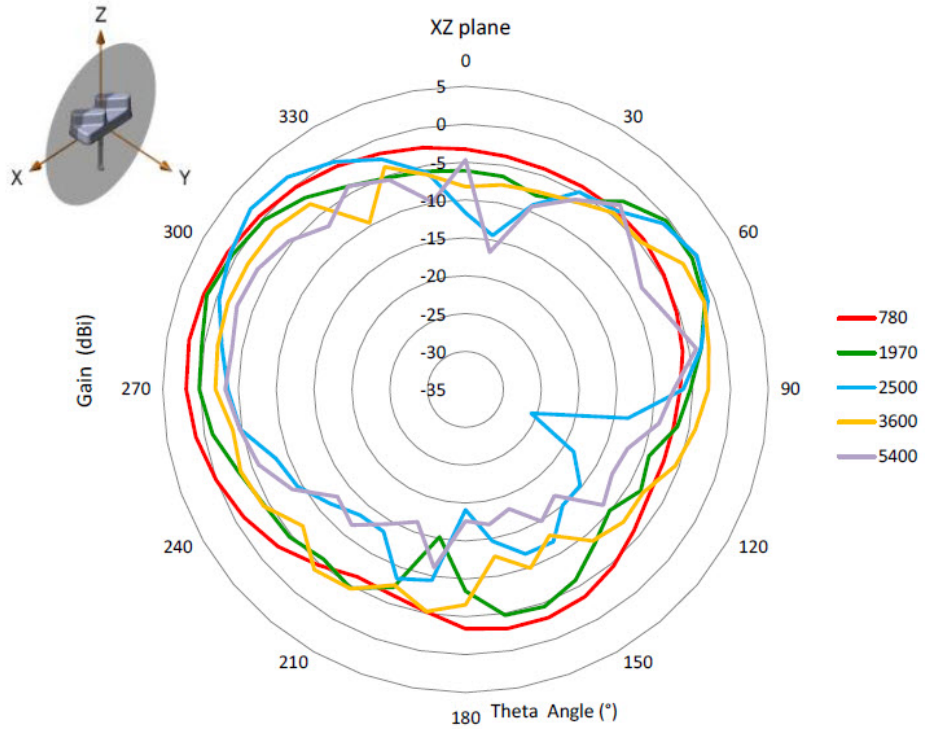

GNSS Antenna - LNA Gain and Radiation Pattern (YZ Plane) Plots

Figure 233: LNA Gain and Out-of-Band Rejection

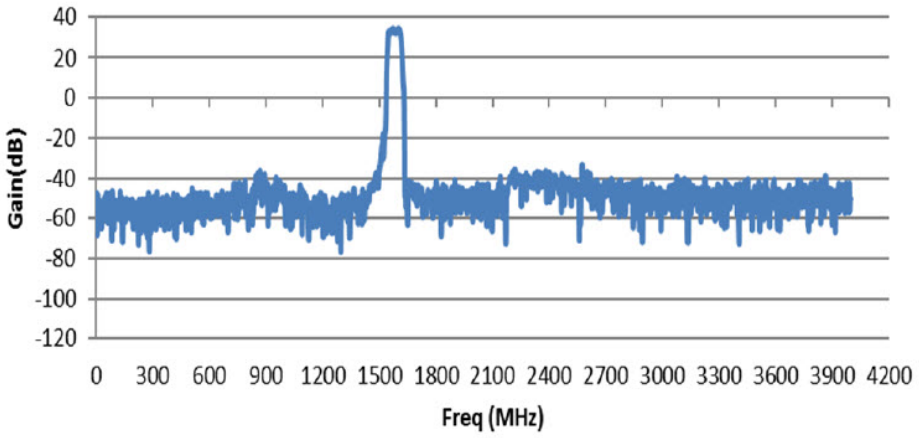

Figure 234: YZ Plane: Passive measurement with 6" cable

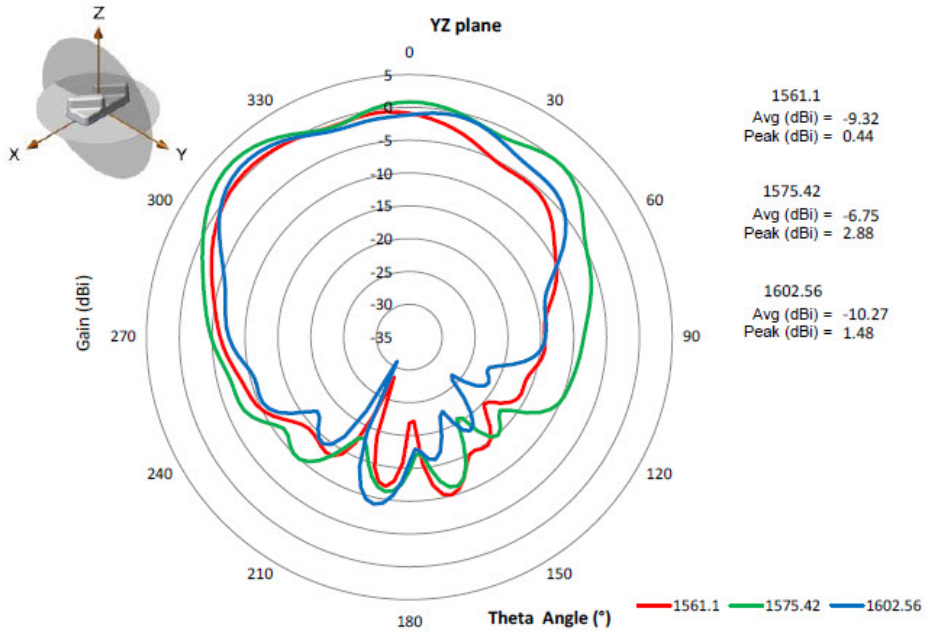

General Safety Precautions

Warning This warning symbol means danger. You are in a situation that could cause bodily injury. Before you work on any equipment, be aware of the hazards involved with electrical circuitry and be familiar with standard practices for preventing accidents. Use the statement number provided at the end of each warning to locate its translation in the translated safety warnings that accompanied this device. **Statement 1071**

Warning Do not work on the system or connect or disconnect cables during periods of lightning activity. **Statement 1001**

Warning Do not locate the outdoor antenna near overhead power lines or other electric light or power circuits, or where it can come into contact with such circuits. When installing the antenna, take extreme care not to come into contact with such circuits, as they may cause serious injury or death. For proper installation and grounding of the antenna, please refer to national and local codes (for example, U.S.:NFPA 70, National Electrical Code, Article 810, Canada:Canadian Electrical Code, Section 54). **Statement 1052**

Warning In order to comply with FCC radio frequency (RF) exposure limits, antennas should be located at a minimum of 7.9 inches (20 cm) or more from the body of all persons. **Statement 332**

Note For your safety, and to help you achieve a good installation, please read and follow these safety precautions.

Mast Mounted or Building Mounted Installations

The following instructions are common to most mast mounted or building mounted installations. For specific installation instructions for each antenna, see the antenna data-sheet and the router hardware installation guide.

- Find someone to help you—installing an antenna is often a two-person job.
- Select your installation site with safety, as well as performance, in mind. Remember that electric power lines and phone lines look alike. For your safety, assume that any overhead line can kill you.
- Contact your electric power company. Tell them your plans and ask them to come look at your proposed installation.
- Do not use a metal ladder.
- Do not work on a wet or windy day.
- Do dress properly—wear shoes with rubber soles and heels, rubber gloves, and a long-sleeved shirt or jacket.

- If the assembly starts to drop, move away from it and let it fall. Because the antenna, mast, cable, and metal guy wires are all excellent conductors of electrical current, even the slightest touch of any of these parts to a power line completes an electrical path through the antenna and the installer.
- If any part of the antenna system should come in contact with a power line, do not touch it or try to remove it yourself. Call your local power company to have it removed safely.
- If an accident should occur with the power lines, call for qualified emergency help immediately.
- Assemble your new antenna on the ground or a level surface at the installation site.
- Connect its coaxial cable while you are on the ground and attach the antenna to the mast.
- Ensure that the mast does not fall as you raise or remove it. Use a durable non-conductive rope secured at each two foot level as the mast is raised. Have an assistant tend the rope, ready to pull the mast clear of any hazards (such as power lines) should it begin to fall.
- Use the mounting bracket provided with the antenna.
- If the installation will use guy wires:
  - Install guy anchor bolts.
  - Estimate the length of guy wire and cut it before raising the mast.
  - Attach guy wires to a mast using guy rings.
  - In the case of a guyed (tall, thin mast) installation, you must have at least one assistant to hold the mast upright while the guy wires are attached and tightened to the anchor bolts.
- Attach a “DANGER” label at eye level on the mast.
- Install ground rods to remove any static electricity buildup and connect a ground wire to the mast and ground rod. Use ground rods designed for that purpose, not a spare piece of pipe.

Unused Antenna Ports

Port plugs must be installed in any unused antenna ports.

The weatherproof caps on the connectors protect the router interior from environmental elements including water, heat, cold, and dust. They are installed on unused ports before the router is shipped.

When you install a new antenna in a port with an N-connector:

- Chassis-mounted antennas—Remove the weather proof cap before installing a chassis-mounted antenna.
- External antennas—Remove weatherproof cap, then connect the supported Cisco cable to the connector.

Guidelines to Achieving Optimal RF and Antenna Performance

Antennas are a critical component of a wireless communication system. Selecting a suitable antenna, an optimal antenna location, or antenna site is essential for optimum performance of a wireless links.

This section covers general tips for optimizing RF performance of indoor and outdoor terrestrial radio systems in the 400-7125 MHz frequency range. Examples of terrestrial radio systems include 4G LTE, 5G NR, Wi-Fi,

LoRa, LR-WPAN and similar. In this context GPS SPS would not be considered a terrestrial system as the signal is received from space, not from another terrestrial site.

Because the antenna transmits and receives radio signals over the air, overall RF performance of the link is susceptible to RF obstructions and common sources of RF interference that can reduce throughput and range of the system.

Follow these guidelines to optimize performance. When in doubt, consult a qualified RF professional, and check with your solution partner for specific recommendations.

Antenna Model Selection and Performance

Consider the following when planning your installation:

- When selecting the antenna, ensure that it covers the frequency ranges or frequency bands of interest, and that it has good RF parameters such as antenna efficiency, VSWR and suitable radiation pattern for every frequency range that your application will use with this antenna.
- Antenna pattern is important. Omni-directional antennas have lower gain, but allow communicating to devices in all azimuth directions. Directional antennas concentrate the beam in a specific direction, making them ideal for point to point communication.
- When a system has multiple RF ports for receive and / or transmit, as is the case for 4G LTE , 5G NR or Wi-Fi, it is highly recommended to populate all the RF ports with suitable antennas to take advantage of MIMO, rather than rely on a single port or single antenna to save on cost. Please see the MIMO section for a detailed description of MIMO benefits.
- For RF systems that support multiple RF ports and multiple RF standards such as LTE, Wi-Fi, and GPS: consider using a multi-element antenna that integrates multiple antennas under the same radome (cover). Doing so may reduce cost compared to deploying and mounting a discrete single port antenna for every RF port.
- For communication between fixed infrastructure devices, such as mesh nodes or a point-to-point backhaul link, each device should have an antenna with the same polarization. If communicating with mobile devices that might be randomly oriented, consider dual-polarized antennas, such as those with both vertical and horizontal or slant +45° and -45° polarized elements.

Antenna Environmental Specifications

The selected antenna must have suitable mechanical and environmental specifications for the environment where it will be deployed. For example, shock and vibration specifications for transportation, corrosion resistant construction for marine and oil and gas industries, or IP (ingress protection) rating for outdoor deployment. Indoor antennas are typically not suitable for harsh industrial environments. Please check with your system integrator for environmental requirements for your application.

Antenna Accessories and Mounting

Consider the following when planning your installation:

- Carefully consider what type of other RF accessories, besides antenna, such as RF cables, lightning arrestors or RF adapters may be required in your installations. It is best to minimize long RF cable runs due to RF signal losses in the cable. Thinner RF cables have more RF loss , thicker cables are less flexible and more expensive.

- Carefully consider how the antenna will be physically mounted, as this may affect antenna selection. For example, a stud mount mechanical mounting design is a better fit for mounting on top of an electrical cabinet than a mast mount antenna.
- For outdoor deployments, follow installation instructions for the antenna. It is good practice to keep protective covers on the radio's RF ports and any antenna or accessory RF ports until the moment the interfaces are mated. This reduces chances of contamination, trapping water or condensation inside the connector, or accidental damage to RF interfaces.

MIMO Performance and Arrays

MIMO systems deliver benefits of higher SNR, higher reliability and higher throughput compared to single antenna systems. In more technical terms, MIMO delivers array gain, diversity gain and multiplexing gain compared to single antenna.

- Array gain — Improvement in SNR (signal to noise ratio) by coherently combining signals from multiple antennas. For example, increasing SNR through beamforming techniques.
- Diversity gain — Improvement in reliability by mitigating deep fading or strong destructive EM wave interference. For example, in a two-antenna system, if one antenna is experiencing deep fading due to an EM destructive null at its location at a given instant, the other antenna is unlikely to have a null at the same instant, and the combined SNR stays at a reliable level. In contrast, a single antenna would see SNR oscillating between good SNR and very poor SNR and reliability would degrade.
- Multiplexing gain — Increase in system capacity or throughput by sending independent data over multiple spatial streams simultaneously. The number of streams cannot be more than the number of antennas. For example, to support three spatial streams, a minimum of three antennas is required. Often there may be additional antennas for diversity or redundancy, such as in the case of 4x4:3, or 4x4 MIMO with 3 spatial streams.

If deploying multiple single-element antennas for a MIMO system in an array, ensure sufficient spacing between the antennas. Omnidirectional elements should generally be at least one wavelength apart at the lowest operating frequency.

Consider the following:

- For Wi-Fi systems operating in the 2.4, 5, and/or 6 GHz bands, space elements at least 5 inches (12.5 cm) apart.
- For 4G LTE and 5G systems with the lowest operating frequency of 617 MHz , space elements at least 20 inches (50 cm) apart.
- Note that spacing between elements inside multi-element MIMO antennas is often less than one wavelength. However multi-element antennas are engineered with MIMO performance in mind, by providing antenna diversity through pattern, polarization, and isolation between MIMO elements.

Antenna siting and location

Consider the following when planning your installation:

- Plan antenna location ahead of time. Ideal location for an antenna is in LOS (line of sight) of the counterpart that it is trying to communicate with. Under LOS conditions the signals propagate directly between the two communication nodes, without relying on signal bouncing off a wall or other structure to reach the counterpart. This is sometimes not possible to achieve in practice, but it is a useful goal to keep in mind when optimizing antenna location.

- While it is good to keep RF cables short, it is most desirable for an antenna to be in the best location it can be to provide the desired coverage.
- For large deployments involving multiple units communicating with each other across a complex urban or industrial landscape, consider running an RF propagation modeling study to predict approximate simulated coverage maps and determine initial placement of the units. A propagation study may help reduce overall deployment cost by discovering and mitigating issues with RF coverage before the infrastructure is physically installed.
- Keep the antenna away from metal obstructions such as heating and air-conditioning ducts, large ceiling trusses, building superstructures, and major power cabling runs. One exception is if the antenna is designed to be mounted on a ground plane. If mounting on a ground plane, mount the antenna on a flat metal surface away from adjacent obstructions.
- It is strongly recommended not to install antennas directly on the router or access point (AP), unless the router or AP is specifically engineered to directly mount the antennas. Products that are engineered for direct mounting of antennas specifically address each of the below issues.
- Reasons to mount antennas away from the router include:
    - Router location may not be optimal location for antenna to communicate with the counterpart wirelessly, so router and antenna may need to be in different locations.
    - Router may have a clutter of Ethernet cable and power cables around it, which will obstruct antenna signal.
    - A number of routers, such as the IR1835, are modular. They have plug-in RF modules for Wi-Fi , 4G LTE or 5G NR such as WP-WIFI6, P-LTEAP18-GL, P-5GS6-GL. These modules have RF connectors spaced close together, and while it is mechanically possible to install four or five antennas directly attached, this will result in significant degradation to RF performance of antennas due to mutual de-tuning between closely spaced antennas. It is strongly recommended to install antennas away from the chassis in modular cases.
- If installing an antenna indoors, consider that the density and electromagnetic properties of the materials used in the building construction determines the number of walls the signal can pass through and still maintain adequate coverage.
    - Paper and vinyl walls have very little effect on signal penetration.
    - Solid and pre-cast concrete walls limit signal penetration to one or two walls without degrading coverage.
    - Concrete and wood block walls limit signal penetration to three or four walls.
    - A signal can penetrate five or six walls constructed of drywall or wood.
    - A thick metal wall causes signals to reflect off, causing poor penetration.
    - A chain link fence or wire mesh spaced between 1 and 1 1/2 in. (2.5 and 3.8 cm) acts as a harmonic reflector that blocks a 2.4-GHz radio signal.
    - Install the antenna away from microwave ovens and 2-GHz cordless phones. These products can cause signal interference because they operate in the same frequency range as the device your antenna is connected to.

Installing the Antenna

The antenna installation includes the following procedures:

Contents of the Antenna Kit

The antenna kit contains:

- 1 x Cisco ANT-5-5G4G1-O antenna

Tools and Equipment Required

In addition to the parts included in the antenna kit described in the previous section, you must provide the following tool to install the antenna on the router:

- Open-ended wrench
- Electric drill

Note This list does not include the tools and equipment required to assemble and erect the tower, mast, or other structure you intend to mount your antenna on.

Mounting the Antenna

Note A clean, flat surface at least 20 x 20 cm (8 x 8 in.) in area is required for mounting the antenna.

Follow these instructions to mount the antenna, referring to the Antenna Assembly:

1. Mark the desired location where you plan to mount the antenna and create a hole through the surface The diameter of the hole must be at least Ø1.063” (27.0mm).
2. Thread the cables through the hole and insert the aluminum stud on the underside of the antenna into the hole. Ensure that the rubber gasket on the underside of the antenna sits flush against the mounting surface.
3. Inside the vehicle, place the rubber sealing washer around the stud. Then place the metal washer and the metal nut onto the stud. Tighten the nut.

Connecting the Antenna to the Router

To attach the router-end of the cable to your router, please see the Industrial Routers and Gateways page and navigate to the respective Hardware Installation Guide.

Note Coaxial cable loses efficiency as the frequency increases, resulting in signal loss. The cable should be kept as short as possible because cable length also determines the amount of signal loss—the longer the cable length or run, the greater the loss).

Communications, Services, and Additional Information

- To receive timely, relevant information from Cisco, sign up at Cisco Profile Manager.
- To get the business impact you're looking for with the technologies that matter, visit Cisco Services.
- To submit a service request, visit Cisco Support.
- To discover and browse secure, validated enterprise-class apps, products, solutions, and services, visit Cisco DevNet.
- To obtain general networking, training, and certification titles, visit Cisco Press.
- To find warranty information for a specific product or product family, access Cisco Warranty Finder.

Cisco Bug Search Tool

Cisco Bug Search Tool (BST) is a web-based tool that acts as a gateway to the Cisco bug tracking system that maintains a comprehensive list of defects and vulnerabilities in Cisco products and software. BST provides you with detailed defect information about your products and software.

Documentation Feedback

To provide feedback about Cisco technical documentation, use the feedback form available in the right pane of every online document.

Cisco Support Community

Cisco Support Community is a forum for you to ask and answer questions, share suggestions, and collaborate with your peers. Join the forum at https://supportforums.cisco.com/index.jspa.

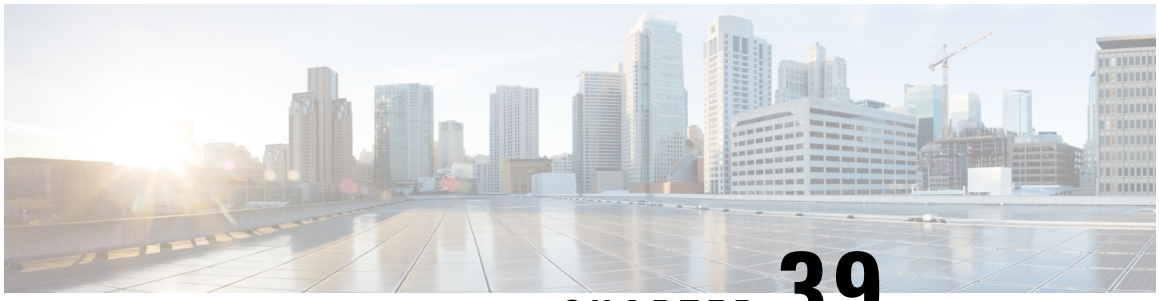

CHAPTER 39

Cisco 5-in-1 Vehicle Mount and Fixed Infrastructure Antenna (ANT-5-4G2WL2G1-O)

This chapter contains the following:

- Overview, on page 647
- Antenna Features, on page 647
- Antenna Model, on page 648
- Antenna Assembly, on page 648
- Technical Specifications, on page 650
- Antenna Radiation Patterns, on page 654
- General Safety Precautions, on page 658
- Guidelines to Achieving Optimal RF and Antenna Performance, on page 660
- Installing the Antenna, on page 663
- Communications, Services, and Additional Information, on page 664

Overview

This section describes the technical specifications and installation instructions for the Cisco 5-in-1 Vehicle Mount and Fixed Infrastructure Antenna, hereafter referred to as the antenna. The antenna is a five port antenna with two elements designed to cover the 698-960, 1448-1511and 1710-2700 MHz cellular bands, two elements designed to cover the 2.4-2.5 and 4.9-5.85 GHz WLAN bands and one GPS element. The antenna can be mounted on the roof of a vehicle or fixed structure. The antenna meets or exceeds a variety of environmental ruggedization specifications for transportation applications.

The topics included are:

Antenna Features

The antenna features:

- Five antenna elements within one radome: two cellular, two WLAN and one GPS
- Outdoor and transportation ready
- Roof mount installation

- Dual cellular elements supporting 698-960, 1448-1511 and 1710-2700 MHz
  - Omnidirectional, vertically polarized MIMO
  - Integrated 2 foot cables with TNC male connectors
  - LTE elements are interchangeable, either one can be connected to Main or Aux.
- Dual WLAN elements supporting 2400-2500 and 4900-5875 MHz
  - Omnidirectional, vertically polarized, 2x2 MIMO
  - WiFi elements are interchangeable.
  - Integrated 2 foot cables with RP-TNC plug connectors
- Active GPS element has integrated 17 foot cable with SMA male connector

The antenna may require RF extension cables. A shorter 2 foot cable length was selected on LTE WAN and WiFi WLAN to allow you to optimize LTE WAN and WiFi WLAN RF performance and wireless range. If you require a cable length longer than 2 feet with the antenna, you will need to select RF extension cables of appropriate length and type. Thicker RF cables, such as LMR-600, LMR-400, or LMR-240 result in lower loss, higher RF performance and longer range of wireless network than thinner cables such as LMR-195, LMR-200. The trade-off is that thicker cables are more difficult to bend and route. For optimal performance, the length of thin cables needs to be kept as short as possible.

For example, 2 foot and 10 foot lengths of LMR-195 cable at 2700 MHz frequency would have losses of 0.5dB and 2.3dB respectively. In this example at 2700 MHz the area covered by the wireless system with the 10 foot cable is reduced by 34% compared to the 2 foot cable. Radius of communication is degraded by 20% in 10 foot vs. the 2 foot case. At 5825 MHz WiFi frequency, 2 foot and 10 foot lengths of LMR-195 would have losses of 0.8dB and 3.4dB respectively. In this example at 5825 MHz, the area covered by the wireless system with the 10 foot cable is reduced by 45% compared to the 2 foot cable. Radius of communication is degraded by 26% in the 10 foot vs. the 2 foot case.

Note Loss of the 17 foot GPS cable is compensated by the gain of the active GPS antenna, and has little impact on GPS performance.

Antenna Model

ANT-5-4G2WL2G1-O — Cisco 5-in-1 Vehicle Mount and Fixed Infrastructure Antenna

Antenna Assembly

The following shows the ANT-5-4G2WL2G1-O Antenna:

Figure 235: Cisco ANT-5-4G2WL2G1-O Antenna



Note The GPS cable (center in the diagram) is 17 feet long. It is shown shorter for illustration purposes.

The following shows the mechanical details of the ANT-5-4G2WL2G1-O Antenna:

Figure 236: Cisco ANT-5-4G2WL2G1-O Mechanical Details

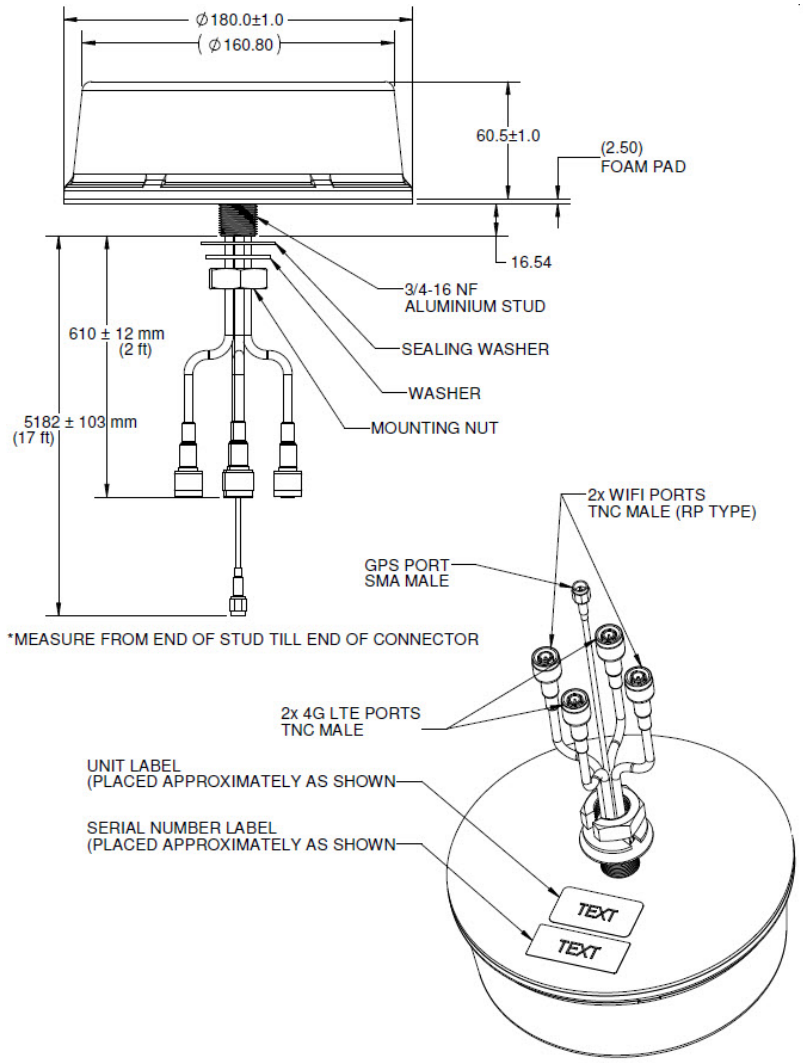

Note All dimensions are in millimeters [inches] unless explicitly stated otherwise in the drawing.

Technical Specifications

This section contains the following:

Radio Frequency Specifications

Table 63: Cellular Antenna Radio Frequency Specification

Specification	Description
Antenna type	Dual element, omnidirectional, 2x2 MIMO
Frequency	• 698 to 960 MHz • 1448 to1511 MHz • 1710 to 2700 MHz
Nominal impedance	50 ohms
VSWR	• 2.1:1 maximum at 698 to 960 MHz • 2.4:1 maximum at 1448 MHz edge, 2.2:1 typical at 1448-1511 MHz • 2.0:1 maximum at 1710 to 2700 MHz
Gain	The gain values (dBi) for each frequency range are: • 2.4 dBi typical, 2.9 dBi maximum at 698 to 960 MHz • 4.2 dBI typical, 4.8 dBI maximum at 1448-1511 MHz • 4.9 dBi typical, 6.5 dBi maximum at 1710 to 2700 MHz
Isolation, cellular to cellular (Main to Aux)	• 14 dB minimum-698 to 960 MHz • 20 dB minimum-1448-1511 MHz • 20 dB minimum-1710 to 2700 MHz
Isolation, WLAN to cellular	• 25 dB minimum-698 to 960 MHz • 20 dB minimum-1448 to 1511 MHz • 15 dB minimum-1710 to 2700 MHz
Efficiency	Antennas were designed and tested for high RF efficiency in all supported cellular bands. Detailed technical specifications can be obtained through your Cisco authorized partner or Cisco account representative.
Polarization	Linear, Vertical
Radiation Pattern	Omnidirectional

Table 64: WLAN Antenna Radio Frequency Specifications

Specification	Description
Antenna type	Dual element, omnidirectional, 2x2 MIMO
Frequency	• 2400 to 2500 MHz • 4900 to 5875 MHz
Nominal impedance	50 ohms
VSWR	2.0:1 maximum
Gain	• 4.8 dBi typical, 5.5 dBi maximum at 2400 to 2500 MHz • 5.8 dBi typical, 7.0 dBi maximum at 4900 to 5875 MHz
Isolation, WLAN to WLAN	• 20 dB minimum-2400 to 2500 MHz • 20 dB minimum-4900 to 5875 MHz
Isolation, cellular to WLAN	• 15 dB minimum-1710 to 2700 MHz • 18 dB minimum-2400 to 2500 MHz • 20 dB minimum-1448 to 1511 MHz • 25 dB minimum-4900 to 5875 MHz • 25 dB minimum-698 to 960 MHz
Polarization	Linear, Vertical
Radiation pattern	Omnidirectional

Table 65: GPS Antenna Radio Frequency Specifications

Specification	Description
Antenna type	Patch
Frequency	1575.42 ± 1 MHz (GPS L1)
Nominal impedance	50 ohms
VSWR	2.0:1 maximum
Amplifier Gain	27 ± 3 dB
DC currant	20 mA maximum
DC voltage	2.7 to 12 V

Specification	Description
Isolation, Cellular to GPS	10 dB minimum—1574.42 to 1576.42 MHz Cellular coexistence tested over multiple bands, GPS includes coexistence filters.
Polarization	RHCP
Radiation pattern	Hemispherical

Environmental and Operational Specifications

Table 66: Environmental and Operational Specifications for the Cisco ANT-5-4G2WL2G1-O Antenna

Specification	Description
Operating temperature range	-40 to 158°F (-40 to 70°C)
Storage temperature range	-40 to 185°F (-40 to 85°C)
Altitude	15,000 feet. (4.5 km)
Humidity	5 to 95%
Vibration, Shock, Thermal, Corrosion, Seismic	Outdoor IP67. Tested to a variety of appropriate industrial, vehicular, transportation, and mil-spec standards.

Mechanical Specifications

Table 67: Mechanical Specifications for the Cisco ANT-5-4G2WL2G1-O Antenna

Specification	Description
Mount style	Roof mount, bulkhead
Connector	• Cellular – TNC male • WLAN - RP-TNC male • GPS – SMA male
Cable type	• Cellular – RG-58 • WLAN – RG-58 • GPS – RG-174

Specification	Description
Cable length	• Cellular – 2 foot. (61 cm) • WLAN – 2 foot. (61 cm) • GPS – 17 foot. (518 cm)
Dimensions	7.1 in. (18.0 cm) diameter, 2.48 in. (6.3 cm) height
Weight	1.48 lbs (0.67 kg)
IP rating	IP67
Radome	Polycarbonate, UV resistant, black
Material substance compliance	ROHS compliant

Power Specifications

Table 68: Power Specifications for the Cisco ANT-5-4G2WL2G1-O Antenna

Specification	Description
Nominal Impedance	50 ohms
Maximum input power per port	5 watts

Antenna Radiation Patterns

In the following graphics of the radiation patterns, the blue line denotes Port 1 and the red line denotes Port 2.

Figure 237: 698 MHz Cellular Antenna Radiation Patterns

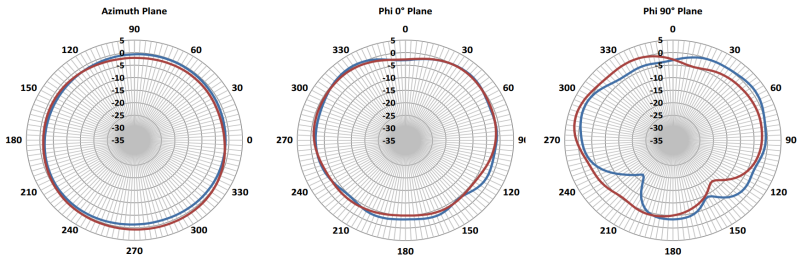

Figure 238: 880 MHz Cellular Antenna Radiation Patterns

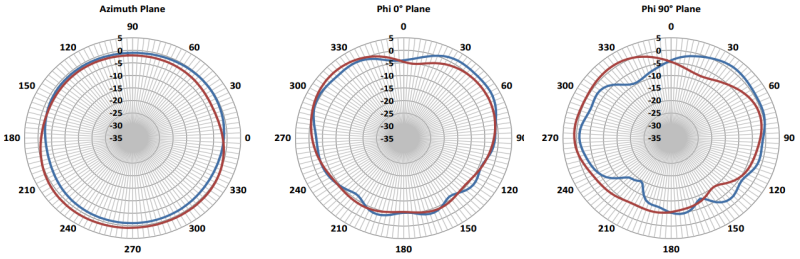

Figure 239: 960 MHz Cellular Antenna Radiation Patterns

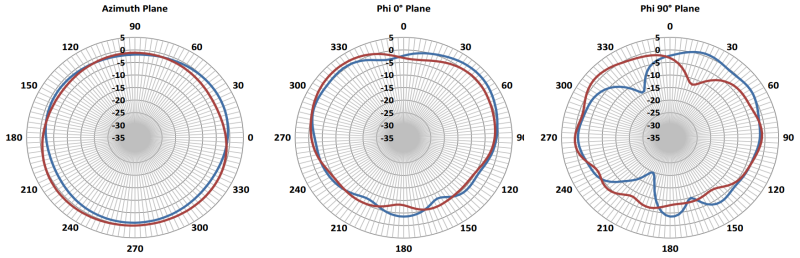

Figure 240: 1470 MHz Cellular Antenna Radiation Patterns

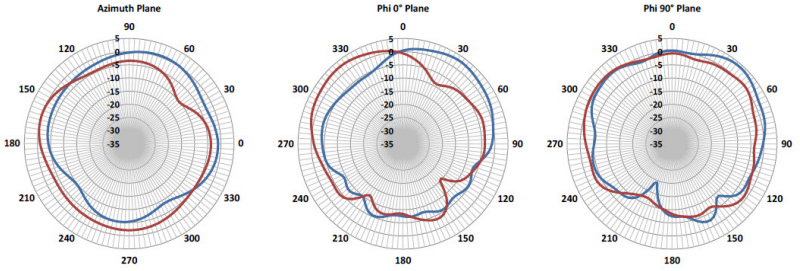

Figure 241: 1710 MHz Cellular Antenna Radiation Patterns

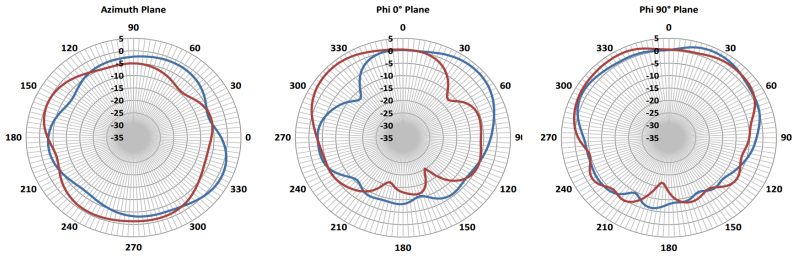

Figure 242: 2170 MHz Cellular Antenna Radiation Patterns

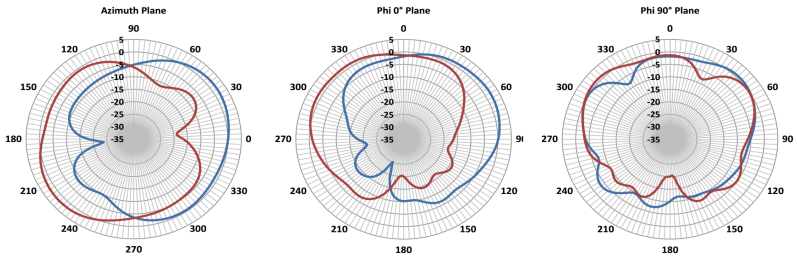

Figure 243: 2700 MHz Cellular Antenna Radiation Patterns

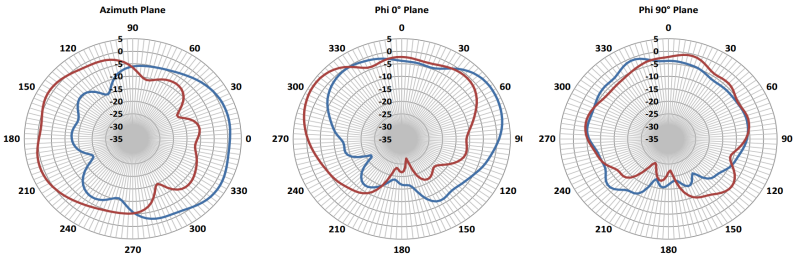

WLAN Wi-Fi Antenna Radiation Patterns

Figure 244: 2400 MHz WLAN Antenna Radiation Patterns

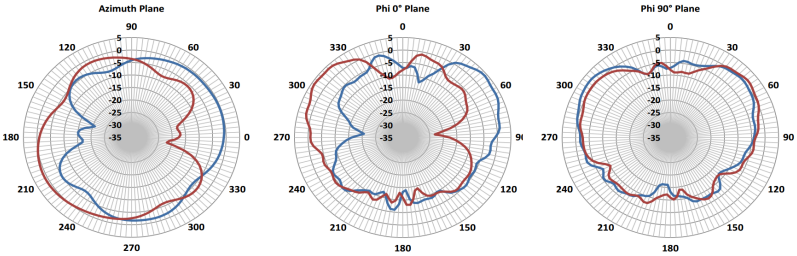

Figure 245: 2500 MHz WLAN Antenna Radiation Patterns

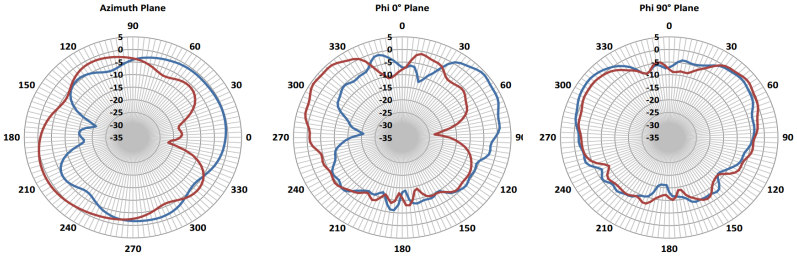

Figure 246: 4900 MHz WLAN Antenna Radiation Patterns

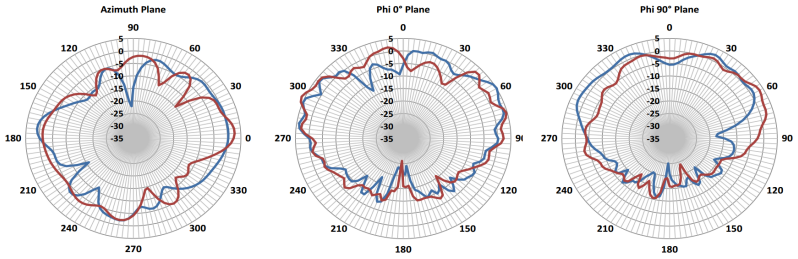

Figure 247: 5150 MHz WLAN Antenna Radiation Patterns

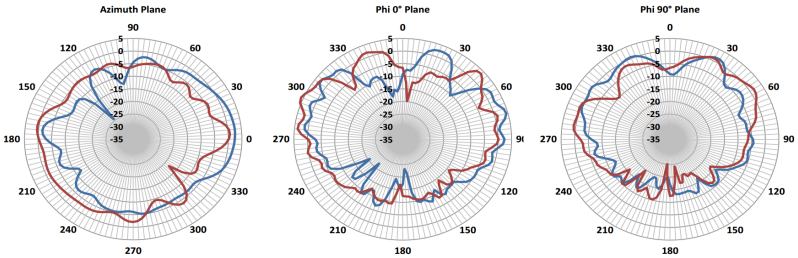

Figure 248: 5275 MHz WLAN Antenna Radiation Patterns

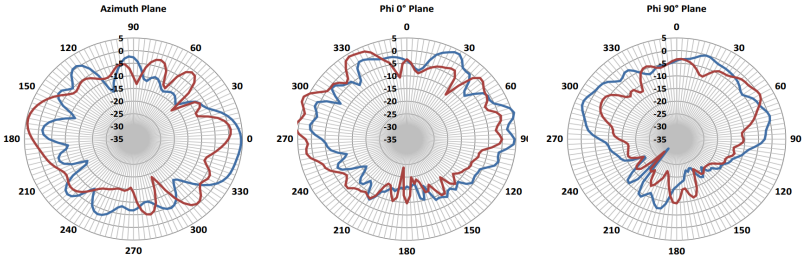

Figure 249: 5875 MHz WLAN Antenna Radiation Patterns

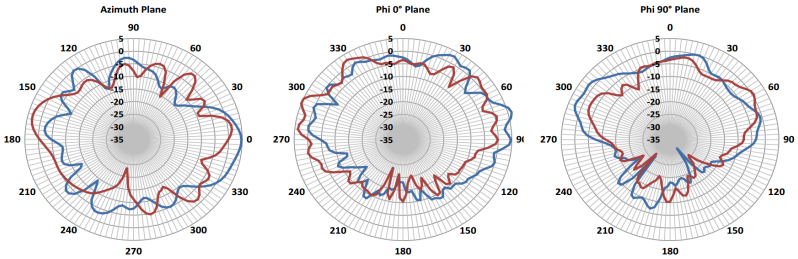

GPS Radiation Patterns

Figure 250: 1575 MHz GPS Antenna Radiation Patterns

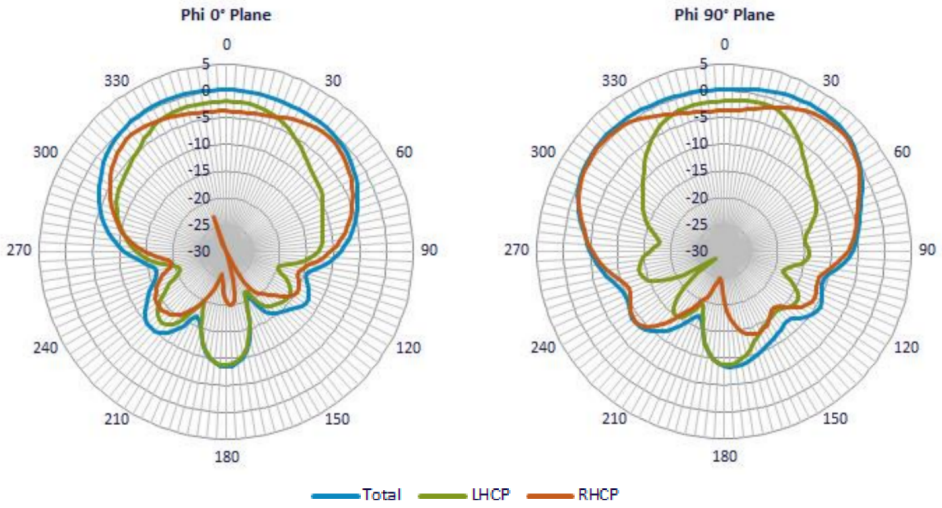

General Safety Precautions

Warning This warning symbol means danger. You are in a situation that could cause bodily injury. Before you work on any equipment, be aware of the hazards involved with electrical circuitry and be familiar with standard practices for preventing accidents. Use the statement number provided at the end of each warning to locate its translation in the translated safety warnings that accompanied this device. **Statement 1071**

Warning Do not work on the system or connect or disconnect cables during periods of lightning activity. **Statement 1001**

Warning Do not locate the outdoor antenna near overhead power lines or other electric light or power circuits, or where it can come into contact with such circuits. When installing the antenna, take extreme care not to come into contact with such circuits, as they may cause serious injury or death. For proper installation and grounding of the antenna, please refer to national and local codes (for example, U.S.:NFPA 70, National Electrical Code, Article 810, Canada:Canadian Electrical Code, Section 54). **Statement 1052**

Warning In order to comply with FCC radio frequency (RF) exposure limits, antennas should be located at a minimum of 7.9 inches (20 cm) or more from the body of all persons. **Statement 332**

Note For your safety, and to help you achieve a good installation, please read and follow these safety precautions.

Mast Mounted or Building Mounted Installations

The following instructions are common to most mast mounted or building mounted installations. For specific installation instructions for each antenna, see the antenna data-sheet and the router hardware installation guide.

- Find someone to help you—installing an antenna is often a two-person job.
- Select your installation site with safety, as well as performance, in mind. Remember that electric power lines and phone lines look alike. For your safety, assume that any overhead line can kill you.
- Contact your electric power company. Tell them your plans and ask them to come look at your proposed installation.
- Do not use a metal ladder.
- Do not work on a wet or windy day.
- Do dress properly—wear shoes with rubber soles and heels, rubber gloves, and a long-sleeved shirt or jacket.
- If the assembly starts to drop, move away from it and let it fall. Because the antenna, mast, cable, and metal guy wires are all excellent conductors of electrical current, even the slightest touch of any of these parts to a power line completes an electrical path through the antenna and the installer.
- If any part of the antenna system should come in contact with a power line, do not touch it or try to remove it yourself. Call your local power company to have it removed safely.
- If an accident should occur with the power lines, call for qualified emergency help immediately.
- Assemble your new antenna on the ground or a level surface at the installation site.
- Connect its coaxial cable while you are on the ground and attach the antenna to the mast.
- Ensure that the mast does not fall as you raise or remove it. Use a durable non-conductive rope secured at each two foot level as the mast is raised. Have an assistant tend the rope, ready to pull the mast clear of any hazards (such as power lines) should it begin to fall.
- Use the mounting bracket provided with the antenna.
- If the installation will use guy wires:
  - Install guy anchor bolts.
  - Estimate the length of guy wire and cut it before raising the mast.
  - Attach guy wires to a mast using guy rings.
  - In the case of a guyed (tall, thin mast) installation, you must have at least one assistant to hold the mast upright while the guy wires are attached and tightened to the anchor bolts.
- Attach a “DANGER” label at eye level on the mast.
- Install ground rods to remove any static electricity buildup and connect a ground wire to the mast and ground rod. Use ground rods designed for that purpose, not a spare piece of pipe.

Unused Antenna Ports

Port plugs must be installed in any unused antenna ports.

The weatherproof caps on the connectors protect the router interior from environmental elements including water, heat, cold, and dust. They are installed on unused ports before the router is shipped.

When you install a new antenna in a port with an N-connector:

- Chassis-mounted antennas—Remove the weather proof cap before installing a chassis-mounted antenna.
- External antennas—Remove weatherproof cap, then connect the supported Cisco cable to the connector.

Guidelines to Achieving Optimal RF and Antenna Performance

Antennas are a critical component of a wireless communication system. Selecting a suitable antenna, an optimal antenna location, or antenna site is essential for optimum performance of a wireless links.

This section covers general tips for optimizing RF performance of indoor and outdoor terrestrial radio systems in the 400-7125 MHz frequency range. Examples of terrestrial radio systems include 4G LTE, 5G NR, Wi-Fi, LoRa, LR-WPAN and similar. In this context GPS SPS would not be considered a terrestrial system as the signal is received from space, not from another terrestrial site.

Because the antenna transmits and receives radio signals over the air, overall RF performance of the link is susceptible to RF obstructions and common sources of RF interference that can reduce throughput and range of the system.

Follow these guidelines to optimize performance. When in doubt, consult a qualified RF professional, and check with your solution partner for specific recommendations.

Antenna Model Selection and Performance

Consider the following when planning your installation:

- When selecting the antenna, ensure that it covers the frequency ranges or frequency bands of interest, and that it has good RF parameters such as antenna efficiency, VSWR and suitable radiation pattern for every frequency range that your application will use with this antenna.
- Antenna pattern is important. Omni-directional antennas have lower gain, but allow communicating to devices in all azimuth directions. Directional antennas concentrate the beam in a specific direction, making them ideal for point to point communication.
- When a system has multiple RF ports for receive and / or transmit, as is the case for 4G LTE , 5G NR or Wi-Fi, it is highly recommended to populate all the RF ports with suitable antennas to take advantage of MIMO, rather than rely on a single port or single antenna to save on cost. Please see the MIMO section for a detailed description of MIMO benefits.
- For RF systems that support multiple RF ports and multiple RF standards such as LTE, Wi-Fi, and GPS: consider using a multi-element antenna that integrates multiple antennas under the same radome (cover). Doing so may reduce cost compared to deploying and mounting a discrete single port antenna for every RF port.
- For communication between fixed infrastructure devices, such as mesh nodes or a point-to-point backhaul link, each device should have an antenna with the same polarization. If communicating with mobile

devices that might be randomly oriented, consider dual-polarized antennas, such as those with both vertical and horizontal or slant +45° and -45° polarized elements.

Antenna Environmental Specifications

The selected antenna must have suitable mechanical and environmental specifications for the environment where it will be deployed. For example, shock and vibration specifications for transportation, corrosion resistant construction for marine and oil and gas industries, or IP (ingress protection) rating for outdoor deployment. Indoor antennas are typically not suitable for harsh industrial environments. Please check with your system integrator for environmental requirements for your application.

Antenna Accessories and Mounting

Consider the following when planning your installation:

- Carefully consider what type of other RF accessories, besides antenna, such as RF cables, lightning arrestors or RF adapters may be required in your installations. It is best to minimize long RF cable runs due to RF signal losses in the cable. Thinner RF cables have more RF loss , thicker cables are less flexible and more expensive.
- Carefully consider how the antenna will be physically mounted, as this may affect antenna selection. For example, a stud mount mechanical mounting design is a better fit for mounting on top of an electrical cabinet than a mast mount antenna.
- For outdoor deployments, follow installation instructions for the antenna. It is good practice to keep protective covers on the radio's RF ports and any antenna or accessory RF ports until the moment the interfaces are mated. This reduces chances of contamination, trapping water or condensation inside the connector, or accidental damage to RF interfaces.

MIMO Performance and Arrays

MIMO systems deliver benefits of higher SNR, higher reliability and higher throughput compared to single antenna systems. In more technical terms, MIMO delivers array gain, diversity gain and multiplexing gain compared to single antenna.

- Array gain — Improvement in SNR (signal to noise ratio) by coherently combining signals from multiple antennas. For example, increasing SNR through beamforming techniques.
- Diversity gain — Improvement in reliability by mitigating deep fading or strong destructive EM wave interference. For example, in a two-antenna system, if one antenna is experiencing deep fading due to an EM destructive null at its location at a given instant, the other antenna is unlikely to have a null at the same instant, and the combined SNR stays at a reliable level. In contrast, a single antenna would see SNR oscillating between good SNR and very poor SNR and reliability would degrade.
- Multiplexing gain — Increase in system capacity or throughput by sending independent data over multiple spatial streams simultaneously. The number of streams cannot be more than the number of antennas. For example, to support three spatial streams, a minimum of three antennas is required. Often there may be additional antennas for diversity or redundancy, such as in the case of 4x4:3, or 4x4 MIMO with 3 spatial streams.

If deploying multiple single-element antennas for a MIMO system in an array, ensure sufficient spacing between the antennas. Omnidirectional elements should generally be at least one wavelength apart at the lowest operating frequency.

Consider the following:

- For Wi-Fi systems operating in the 2.4, 5, and/or 6 GHz bands, space elements at least 5 inches (12.5 cm) apart.
- For 4G LTE and 5G systems with the lowest operating frequency of 617 MHz , space elements at least 20 inches (50 cm) apart.
- Note that spacing between elements inside multi-element MIMO antennas is often less than one wavelength. However multi-element antennas are engineered with MIMO performance in mind, by providing antenna diversity through pattern, polarization, and isolation between MIMO elements.

Antenna siting and location

Consider the following when planning your installation:

- Plan antenna location ahead of time. Ideal location for an antenna is in LOS (line of sight) of the counterpart that it is trying to communicate with. Under LOS conditions the signals propagate directly between the two communication nodes, without relying on signal bouncing off a wall or other structure to reach the counterpart. This is sometimes not possible to achieve in practice, but it is a useful goal to keep in mind when optimizing antenna location.
- While it is good to keep RF cables short, it is most desirable for an antenna to be in the best location it can be to provide the desired coverage.
- For large deployments involving multiple units communicating with each other across a complex urban or industrial landscape, consider running an RF propagation modeling study to predict approximate simulated coverage maps and determine initial placement of the units. A propagation study may help reduce overall deployment cost by discovering and mitigating issues with RF coverage before the infrastructure is physically installed.
- Keep the antenna away from metal obstructions such as heating and air-conditioning ducts, large ceiling trusses, building superstructures, and major power cabling runs. One exception is if the antenna is designed to be mounted on a ground plane. If mounting on a ground plane, mount the antenna on a flat metal surface away from adjacent obstructions.
- It is strongly recommended not to install antennas directly on the router or access point (AP), unless the router or AP is specifically engineered to directly mount the antennas. Products that are engineered for direct mounting of antennas specifically address each of the below issues.
- Reasons to mount antennas away from the router include:
  - Router location may not be optimal location for antenna to communicate with the counterpart wirelessly, so router and antenna may need to be in different locations.
  - Router may have a clutter of Ethernet cable and power cables around it, which will obstruct antenna signal.
  - A number of routers, such as the IR1835, are modular. They have plug-in RF modules for Wi-Fi , 4G LTE or 5G NR such as WP-WIFI6, P-LTEAP18-GL, P-5GS6-GL. These modules have RF connectors spaced close together, and while it is mechanically possible to install four or five antennas directly attached, this will result in significant degradation to RF performance of antennas due to mutual de-tuning between closely spaced antennas. It is strongly recommended to install antennas away from the chassis in modular cases.

- If installing an antenna indoors, consider that the density and electromagnetic properties of the materials used in the building construction determines the number of walls the signal can pass through and still maintain adequate coverage.
  - Paper and vinyl walls have very little effect on signal penetration.
  - Solid and pre-cast concrete walls limit signal penetration to one or two walls without degrading coverage.
  - Concrete and wood block walls limit signal penetration to three or four walls.
  - A signal can penetrate five or six walls constructed of drywall or wood.
  - A thick metal wall causes signals to reflect off, causing poor penetration.
  - A chain link fence or wire mesh spaced between 1 and 1 1/2 in. (2.5 and 3.8 cm) acts as a harmonic reflector that blocks a 2.4-GHz radio signal.
  - Install the antenna away from microwave ovens and 2-GHz cordless phones. These products can cause signal interference because they operate in the same frequency range as the device your antenna is connected to.

Installing the Antenna

The antenna installation includes the following procedures:

Contents of the Antenna Kit

The antenna kit contains:

- 1 x Cisco ANT-5-4G2WL2G1-O antenna

Tools and Equipment Required

In addition to the parts included in the antenna kit described in the previous section, you must provide the following tool to install the antenna on the router:

- Open-ended wrench
- Electric drill



Note This list does not include the tools and equipment required to assemble and erect the tower, mast, or other structure you intend to mount your antenna on.

Mounting the Antenna

Note A clean, flat surface at least 20 x 20 cm (8 x 8 in.) in area is required for mounting the antenna.

Follow these instructions to mount the antenna:

1. Mark the desired location where you plan to mount the antenna and create a hole through the surface The diameter of the hole must be at least 0.75 in. (1.91 cm).
2. Thread the cables through the hole and insert the aluminum stud on the underside of the antenna into the hole. Ensure that the foam gasket on the underside of the antenna sits flush against the mounting surface.
3. Inside the vehicle, place the rubber sealing washer around the stud. Then place the metal washer and the metal nut onto the stud. Tighten the nut.

Connecting the Antenna to the Router

To attach the router-end of the cable to your router, please see the respective Hardware Installation Guide .

Note Coaxial cable loses efficiency as the frequency increases, resulting in signal loss. The cable should be kept as short as possible because cable length also determines the amount of signal loss—the longer the cable length or run, the greater the loss).

Communications, Services, and Additional Information

- To receive timely, relevant information from Cisco, sign up at Cisco Profile Manager.
- To get the business impact you're looking for with the technologies that matter, visit Cisco Services.
- To submit a service request, visit Cisco Support.
- To discover and browse secure, validated enterprise-class apps, products, solutions, and services, visit Cisco DevNet.
- To obtain general networking, training, and certification titles, visit Cisco Press.
- To find warranty information for a specific product or product family, access Cisco Warranty Finder.

Cisco Bug Search Tool

Cisco Bug Search Tool (BST) is a web-based tool that acts as a gateway to the Cisco bug tracking system that maintains a comprehensive list of defects and vulnerabilities in Cisco products and software. BST provides you with detailed defect information about your products and software.

Documentation Feedback

To provide feedback about Cisco technical documentation, use the feedback form available in the right pane of every online document.

Cisco Support Community

Cisco Support Community is a forum for you to ask and answer questions, share suggestions, and collaborate with your peers. Join the forum at https://supportforums.cisco.com/index.jspa.

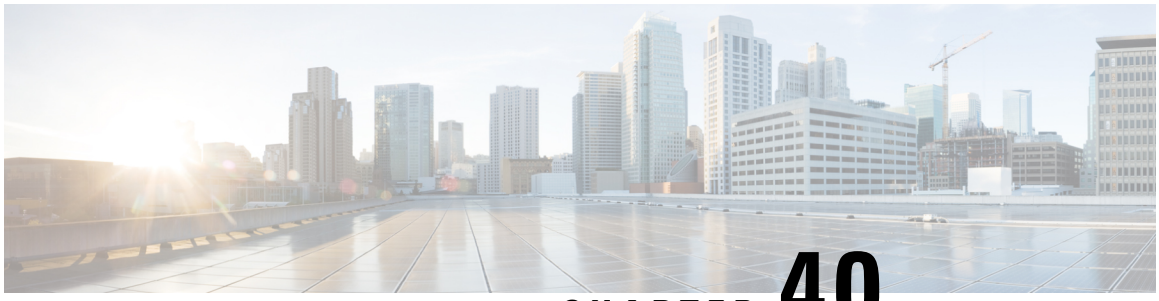

CHAPTER 40

Cisco 7-in-1 Vehicle Mount and Fixed Infrastructure Antenna (ANT-7-5G4WL2G1-O)

This section contains the following:

- Overview, on page 667
- Antenna Features, on page 668
- Antenna Assembly, on page 669
- Technical Specifications, on page 670
- Antenna Radiation Patterns, on page 672
- General Safety Precautions, on page 687
- Guidelines to Achieving Optimal RF and Antenna Performance, on page 689
- Installing the Antenna, on page 692
- Communications, Services, and Additional Information, on page 693

Overview

This section describes the technical specifications and installation instructions for the Cisco Multi-element, 7-in-1, LTE/Wi-Fi/GNSS antenna (ANT-7-5G4WL2G1-O), hereafter referred to as the antenna. The antenna features:

- Antenna Type - Multi Band Monopole, built in ground plane
- Direct Mount, 6x 2ft RG 316 / 1x 17ft RG 174
- 4x Cellular (4G/5G)
- 1x GNSS
- 2x WiFi

The antenna can be mounted on the roof of a vehicle or fixed structure. The antenna meets or exceeds a variety of environmental ruggedization specifications for transportation applications.

The topics included are:

Antenna Features

The antenna features:

- 4x SMA(m) connectors for LTE & 5G
- 2x RPSMA(m) connectors for Wi-Fi
- 1x SMA(m) connector for GNSS
- Supports the following bands:
  - LTE/5G FR1: 617-960, 1710 - 5925 MHz
  - Wi-Fi, dual band: 2400 -2500 MHz
  - Includes Band 71 (617-698 MHz)
- Average peak gain
  - 617 960 MHz 2.1dBi
  - 1710 5925 MHz 5.3dBi
- 2x 2400 2500/4900 5925MHz WiFi
- Average peak gain
  - 2400 2500 MHz 5.8dBi
  - 4900 5925 MHz 5.5dBi
- 1x GNSS Active, supports GNSS, L1-Band 1560 - 1605 MH
- Omni radiation pattern

Antenna Assembly

Figure 251: Antenna Photo

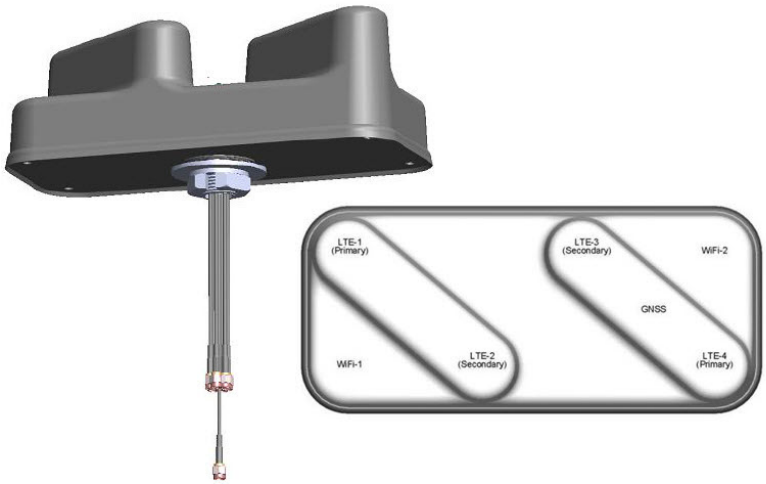

Figure 252: Cisco ANT-7-5G4WL2G1-O Mechanical Details

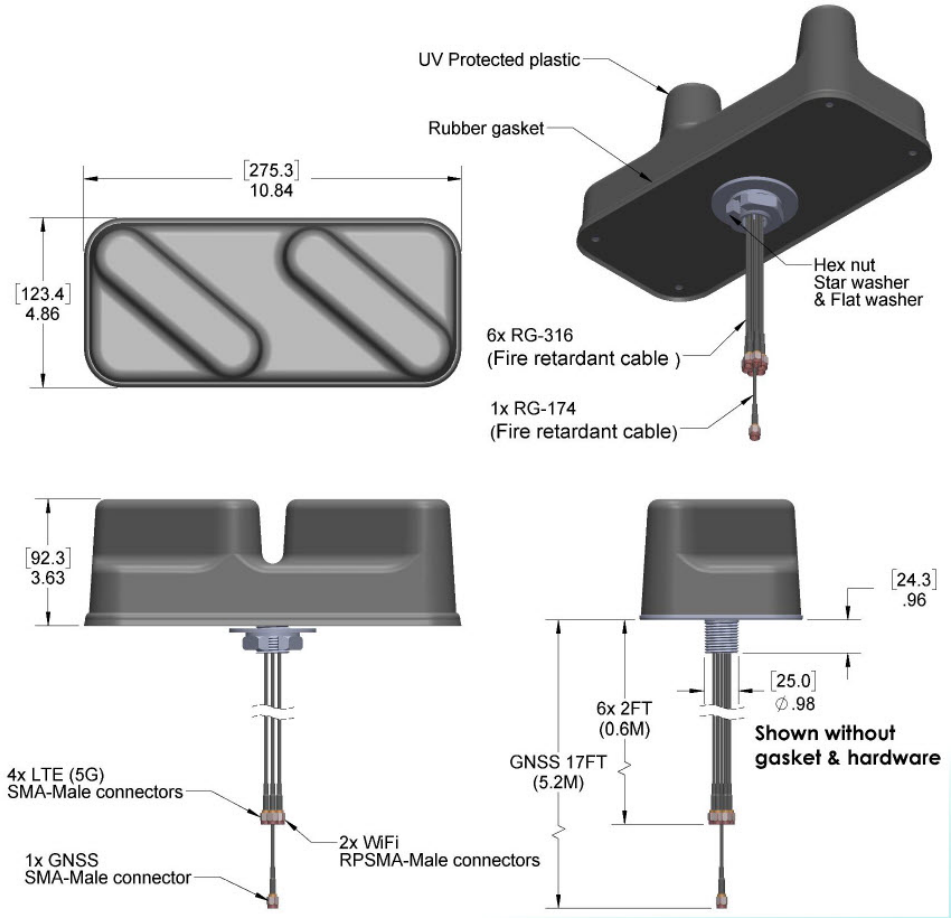

Note All dimensions are in millimeters [inches] unless explicitly stated otherwise in the drawing.

Technical Specifications

This section contains the following:

Mechanical Specifications

The following table shows the mechanical specifications for the ANT-7-5G4WL2G1-O antenna:

Elements	Cable	Connectors	Mounting Method
LTE (All Ports)	2ft (0.6m) RG-316	SMA Plug (Male)	Ø1.063” (27.0mm) Hole required
Wi-Fi (All Ports)	2ft (0.6m) RG-316	Reverse Polarity SMA Plug (Male)	
GNSS	1x (GNSS) 17ft (5.2m) RG-174 / SMA	SMA Plug (Male)	

Dimensions (L x W x H)	Weight	Housing Material	Temperature Range
10.84x4.86x3.63in (275.3x123.3x92.3mm)	1.85 lbs 839.2 g	UV-Stable Rugged Thermoplastics	-40°C to +85°C

Electrical Specifications

The following table provide Electrical Specifications:

Frequency (4x LTE)	617 960/1710 5925 MHz
Frequency (2x WiFi_	2400 2500/4900 5925 MHz
Frequency (GNSS)	1561.098 plus or minus 2.046 1575.42 plus or minus 1.023 1602.5625 plus or minus 4 MHz
Out of Band Rejection (GNSS)	Out of Band Rejection 960MHz >65 dB 1710MHz >60 dB 2170MHz >65 dB 2400MHz >65 dB
Nominal Impedance	50 Ohms
VSWR, LTE /WiFi	3:1 / 2.5:1
Radiation Pattern	Omni
Polarization	Vertical
Average Peak Gain (LTE, 617 960/1710 5925)	2.1/5.3 dBi
Average Peak Gain (WIFI, 2400 2500/4900 5925)	5.8/5.5 dBi
Noise Figure	< 2.4dB
Operating Voltage	3.3 5 Vdc plus or minus 0.5 V
Current Consumption	< 11 mA

Environmental and Operational Specifications

Table 69: Environmental and Operational Specifications for the Cisco ANT-7-5G4WL2G1-O Antenna

Specification	Description
Operating temperature range	-40 to +85°C
Storage temperature range	-40 to +85°C
Altitude	15,000 feet. (4.5 km)
Humidity	5 to 95%
Ingress Protection	Outdoor IP67. Tested to a variety of appropriate industrial, vehicular, transportation, and mil-spec standards.

Antenna Radiation Patterns

The following section shows all of the radiation patterns for the antenna.

VSWR vs Frequency Radiation Patterns

Figure 253: (LTE 1,2,3&4) Measured with 2ft RG-316, Ø24in GP

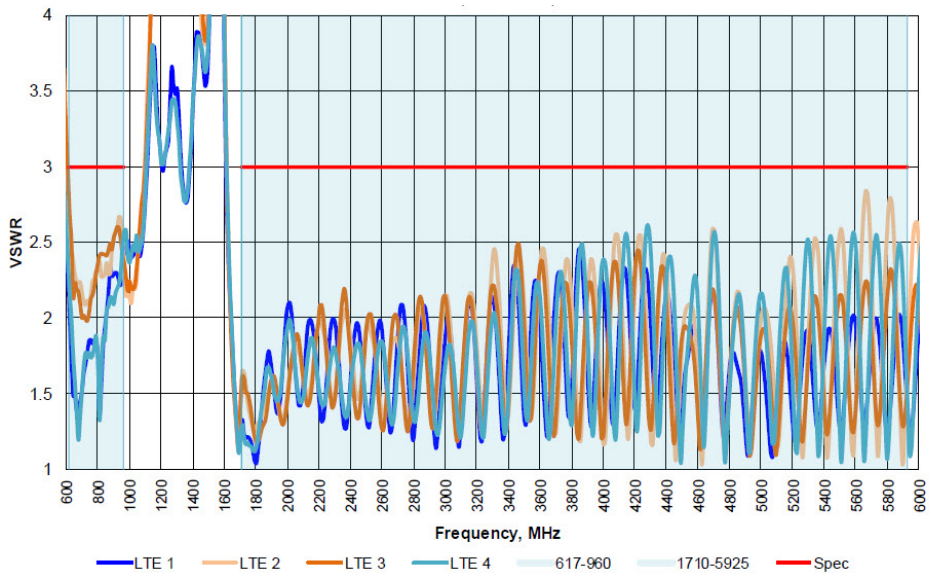

Figure 254: (WiFi 1&2) Measured with 2ft RG-316, Ø24in GP

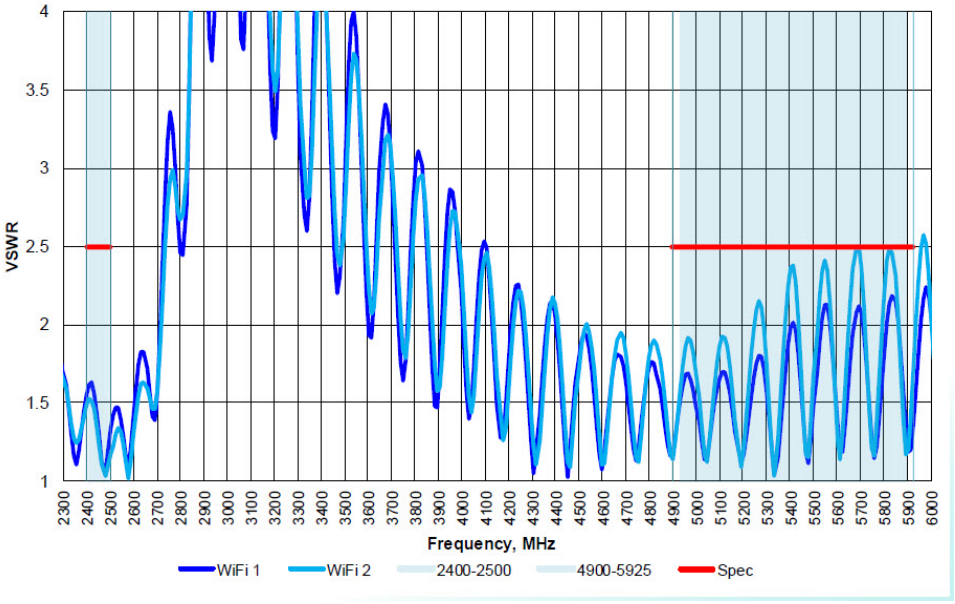

Return Loss / Isolation vs Frequency Radiation Patterns

Figure 255: (LTE 1&3) Measured with 2ft RG-316, Ø24in GP

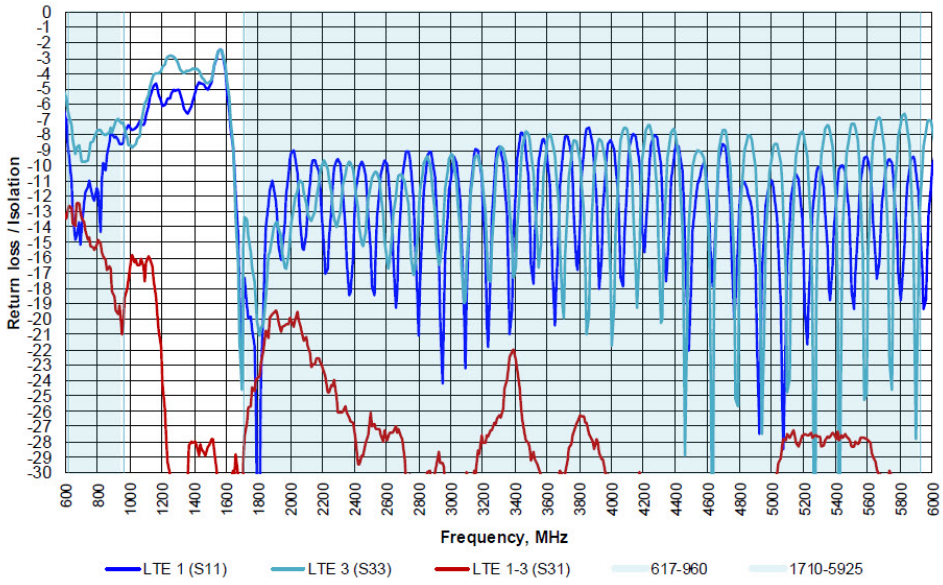

Figure 256: (LTE 1&4) Measured with 2ft RG-316, Ø24in GP

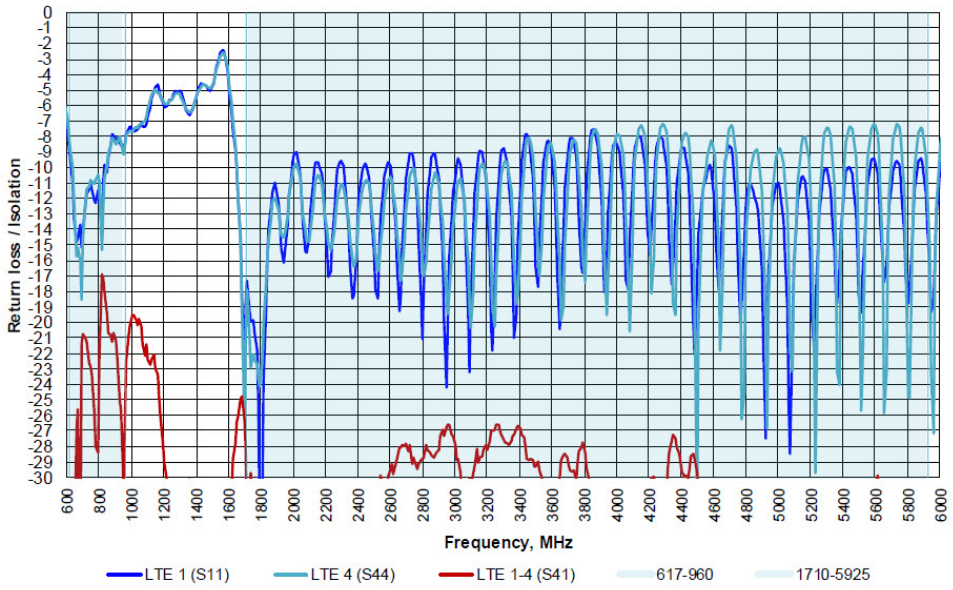

Figure 257: (LTE 2&3) Measured with 2ft RG-316, Ø24in GP

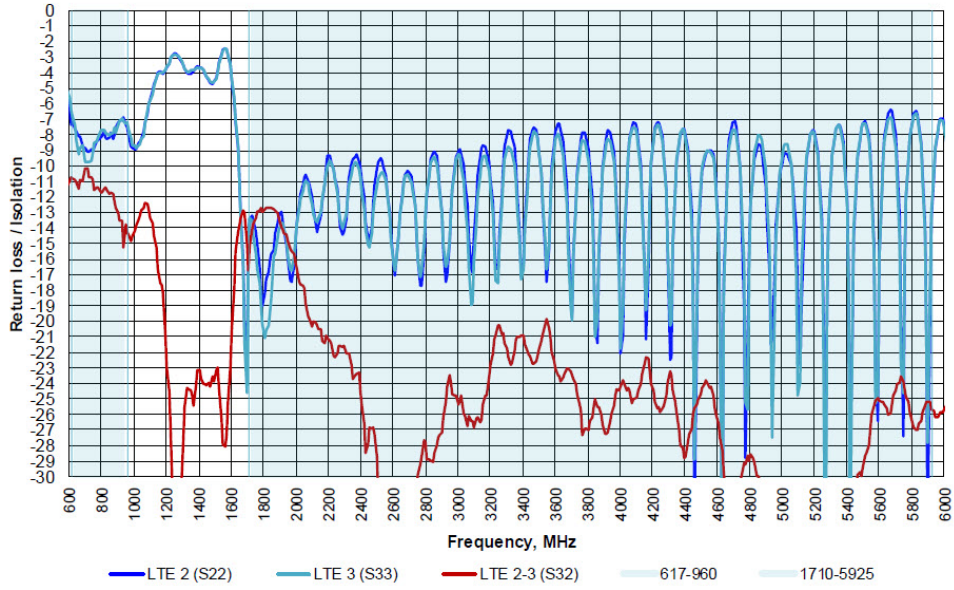

Figure 258: (LTE 2&4) Measured with 2ft RG-316, Ø24in GP

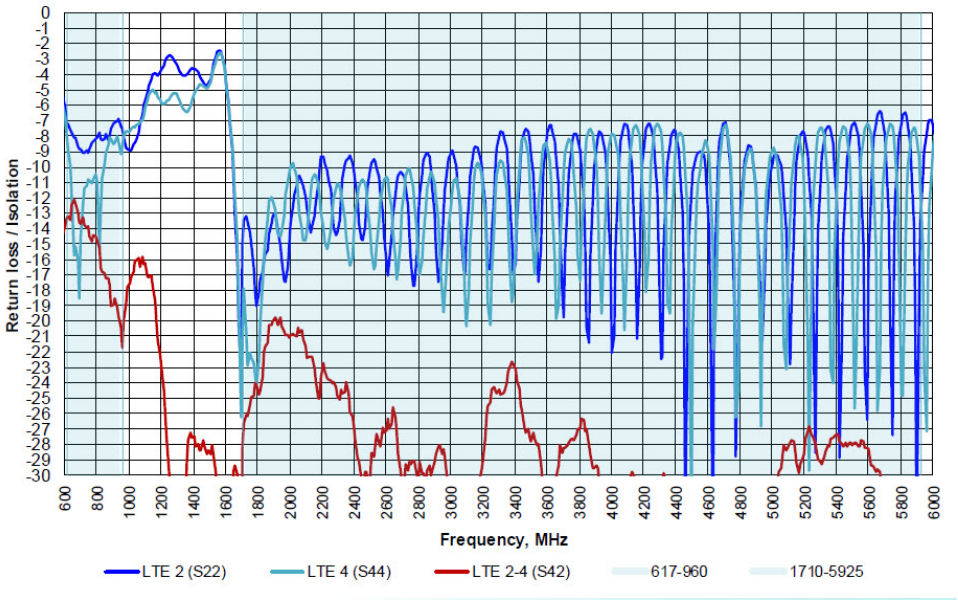

Figure 259: (LTE 3&4) Measured with 2ft RG-316, Ø24in GP

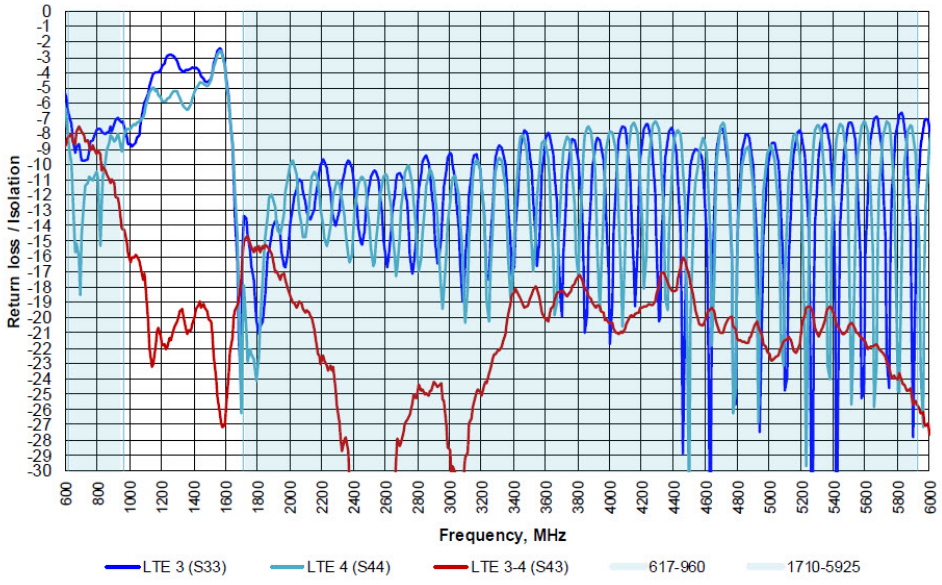

Figure 260: (WiFi 1&2) Measured with 2ft RG-316, Ø24in GP

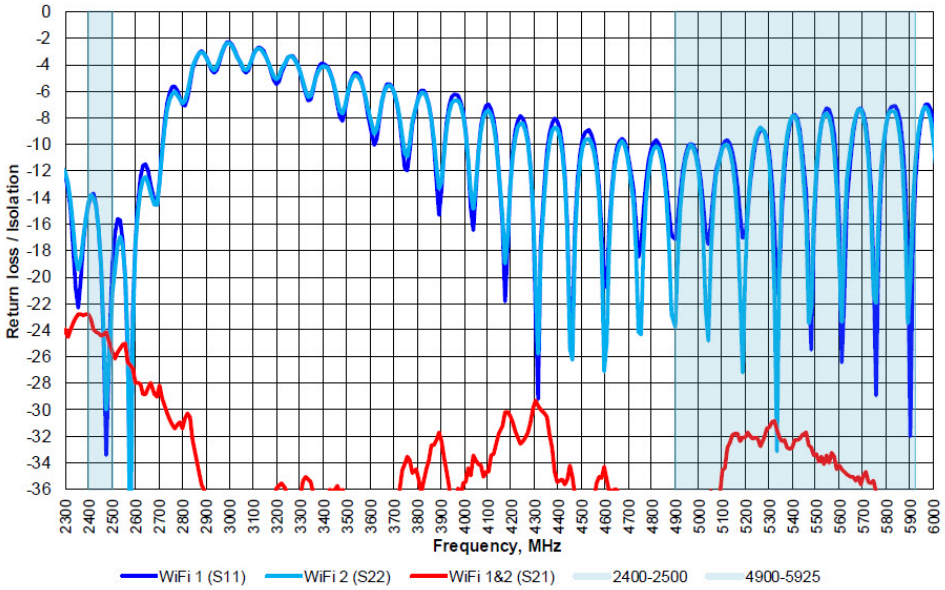

Figure 261: (LTE 1& WiFi 1) Measured W/2ft RG-316, Ø24in GP

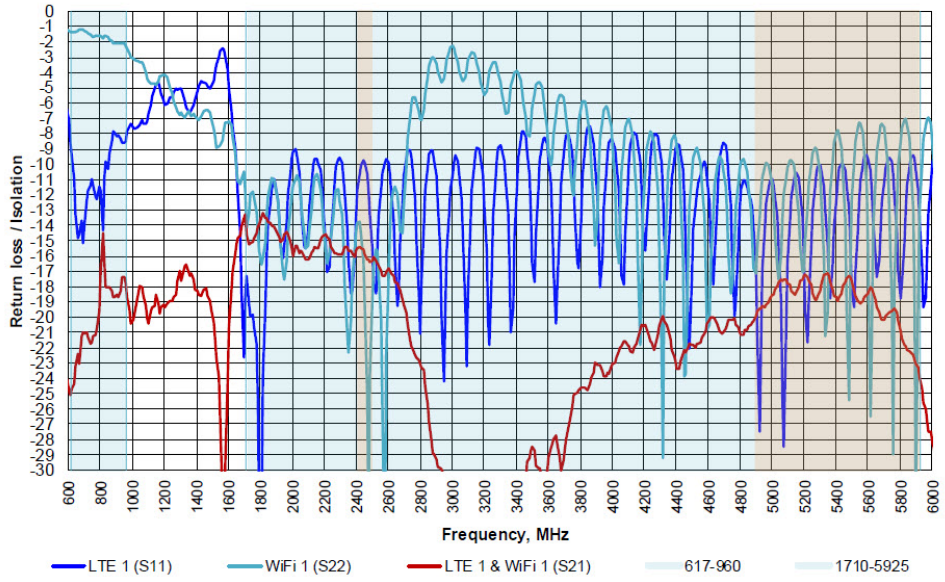

Figure 262: (LTE 1& WiFi 2) Measured with 2ft RG-316, Ø24in GP

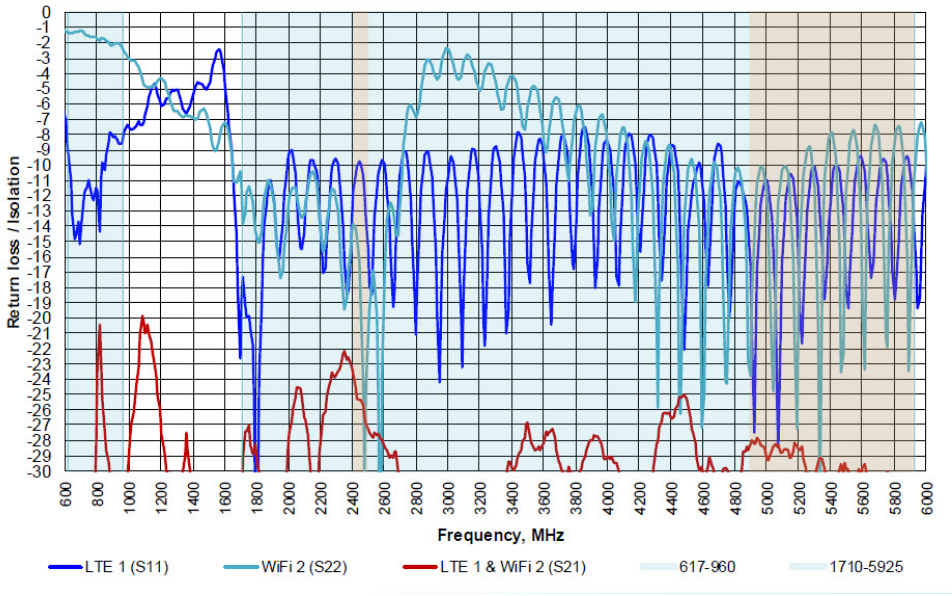

Peak Gain, Frequency, and Efficiency

Peak Gain vs Frequency

Figure 263: (LTE 1,2,3&4) Measured with 2ft RG-316, Ø24in GP

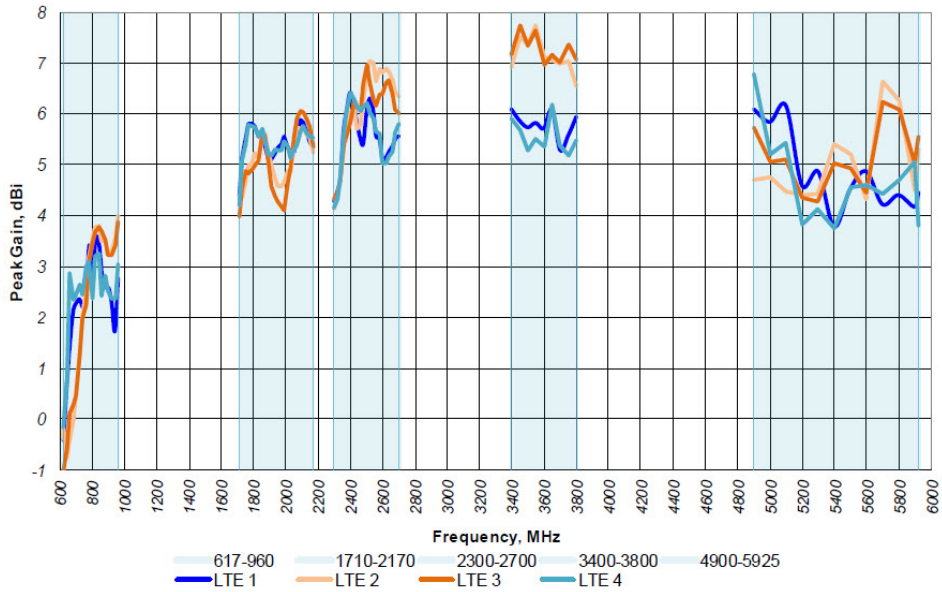

Efficiency vs Frequency

Figure 264: (LTE 1,2,3&4) Measured with 2ft RG-316, Ø24in GP

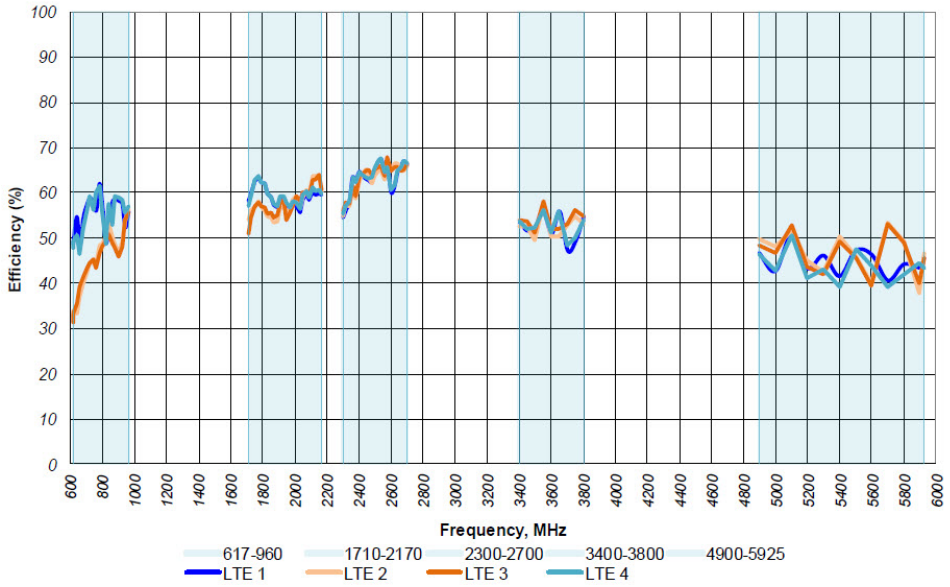

Peak Gain vs Frequency

Figure 265: (WiFi 1&2) Measured with 2ft RG-316, Ø24in GP

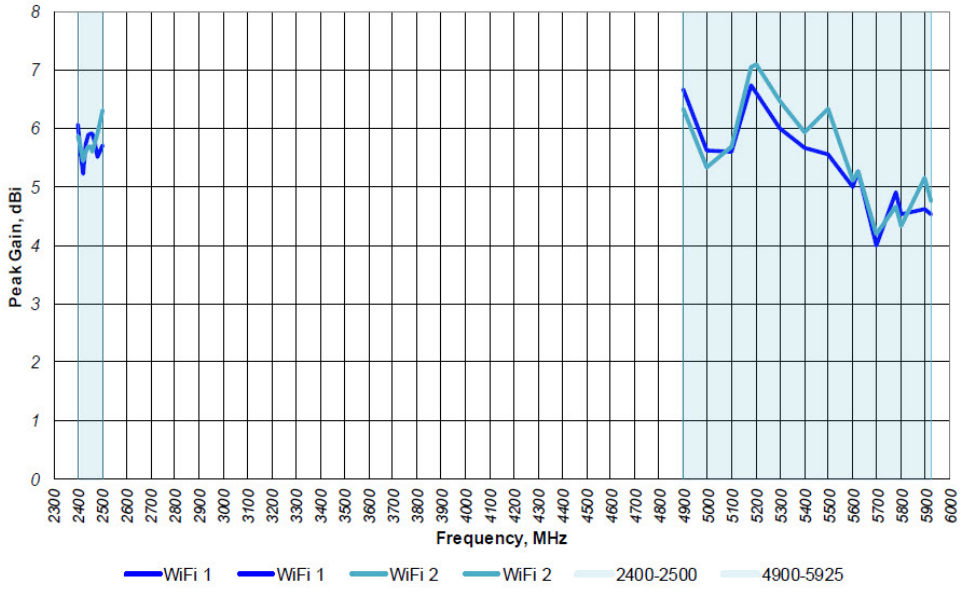

Efficiency vs Frequency

Figure 266: (WiFi 1&2) Measured with 2ft RG-316, Ø24in GP

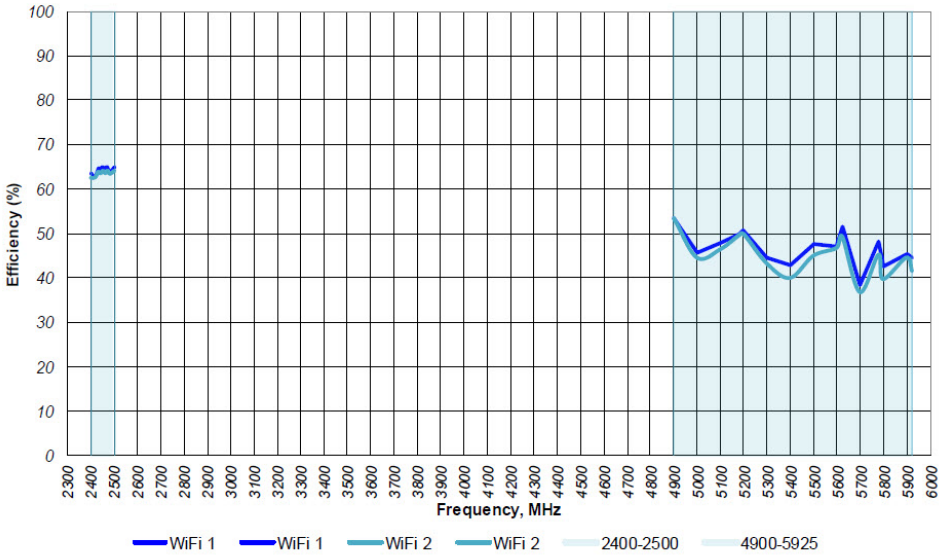

X, Y, and Z Planes

Figure 267: XY plane @ 617-960MHz

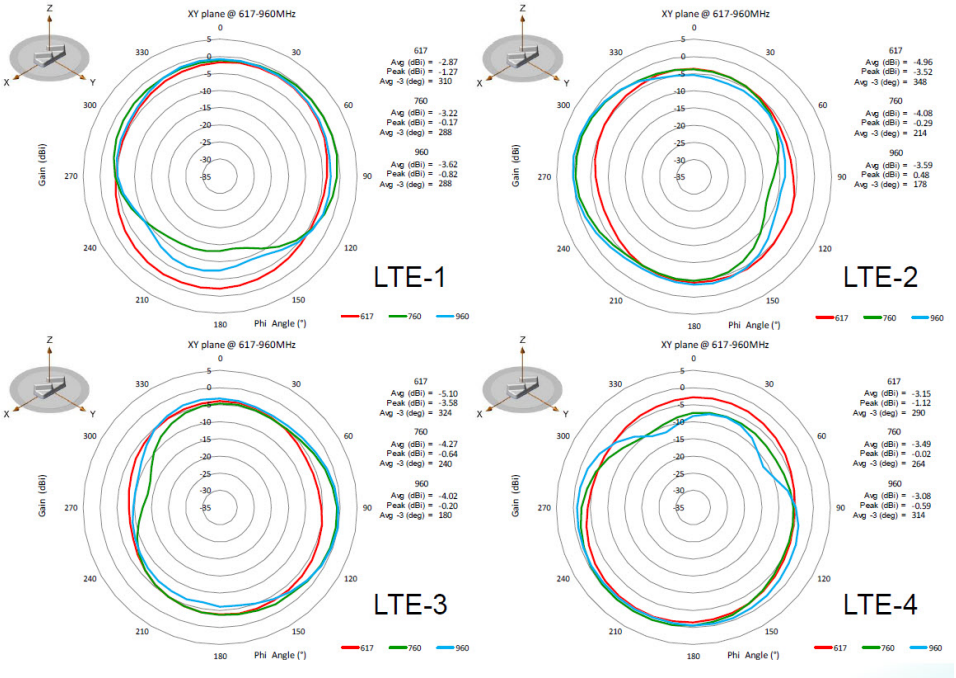

Figure 268: XY plane @ 1710-2170MHz

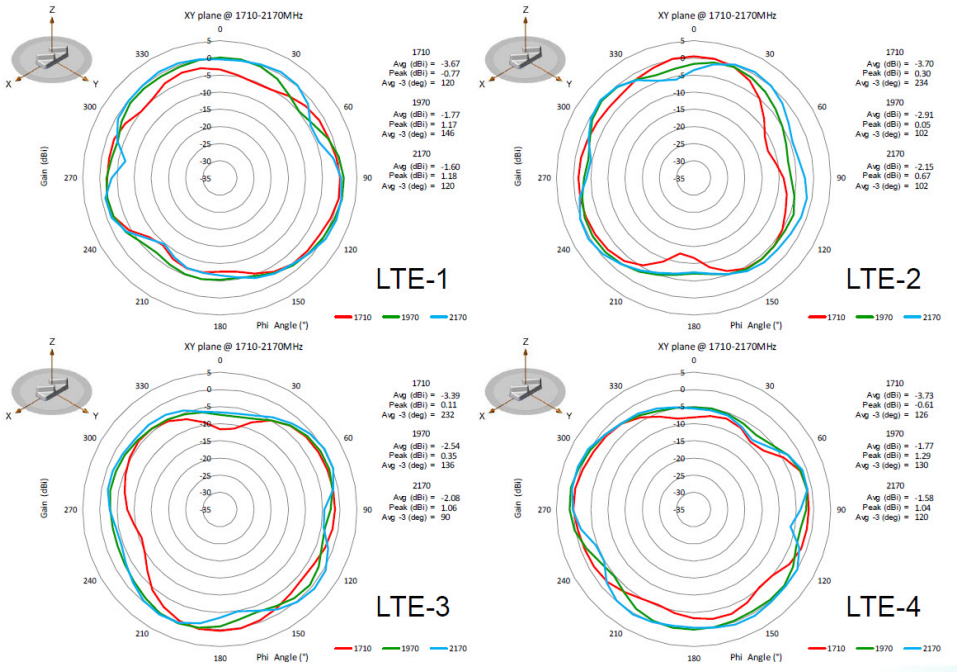

Figure 269: XY plane @ 2300-2700MHz

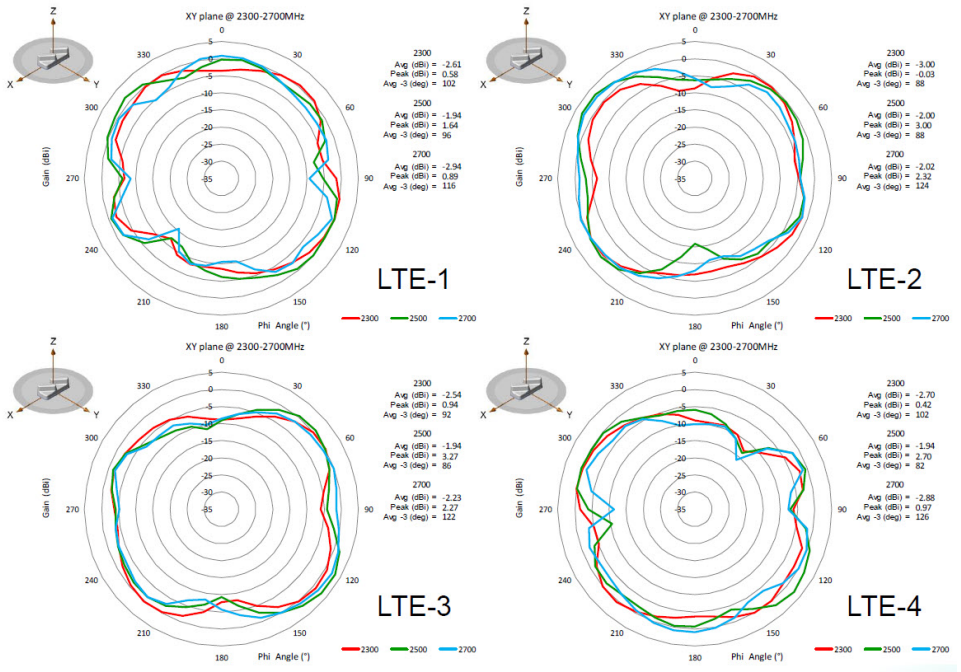

Figure 270: XY plane @ 3400-3800MHz

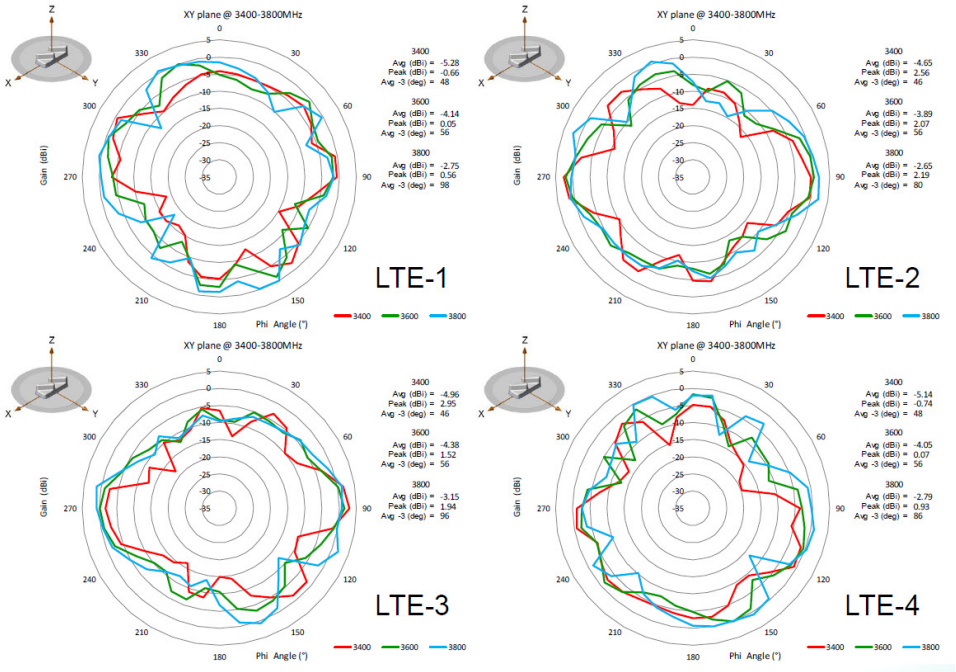

Figure 271: XY plane @ 4900-5400MHz

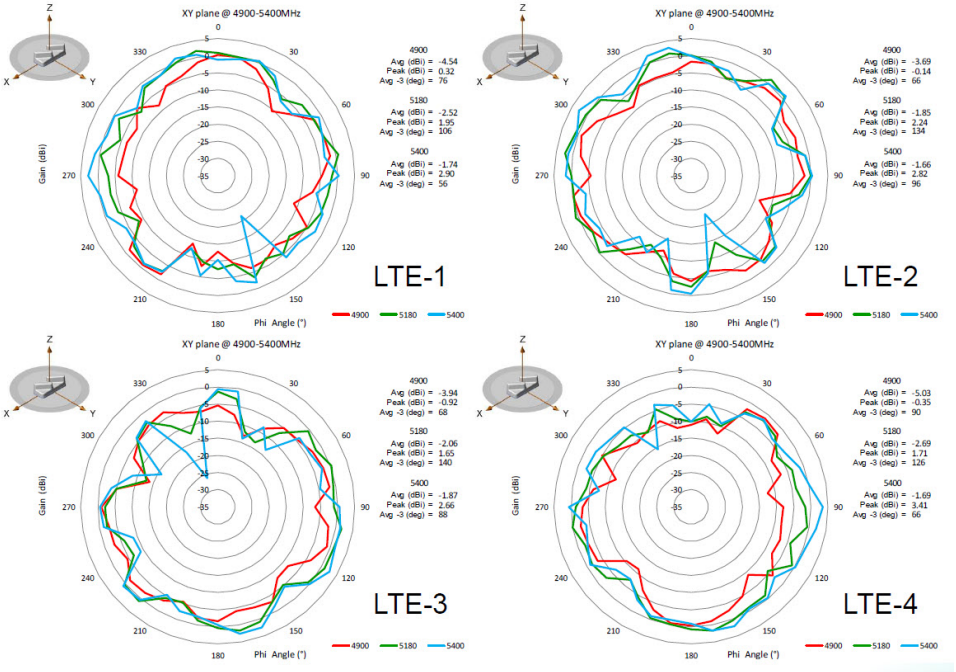

Figure 272: XY plane @ 5625-5925MHz

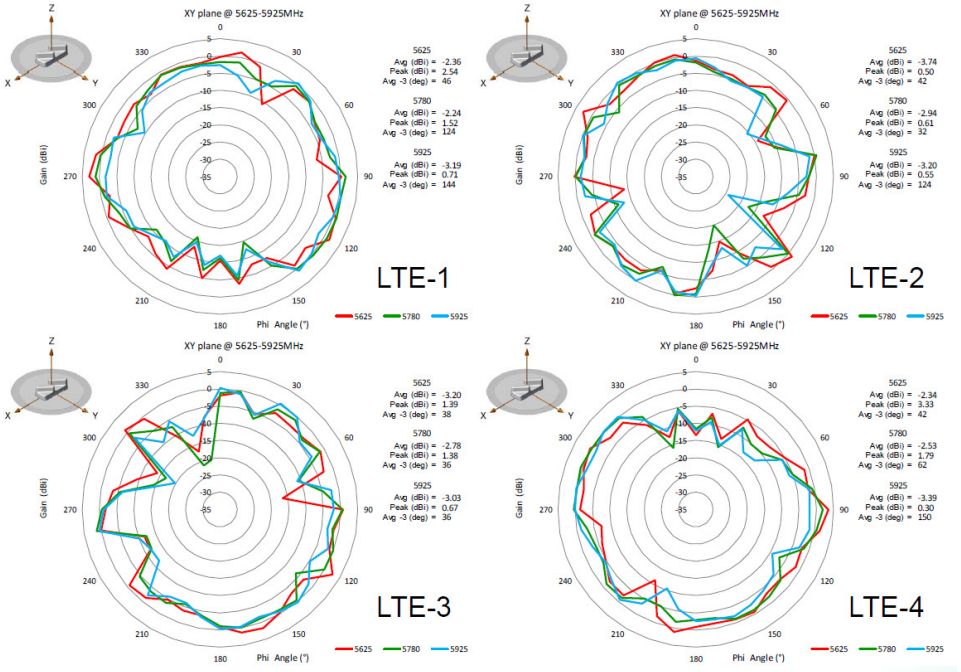

Figure 273: XZ plane @ 617-960MHz

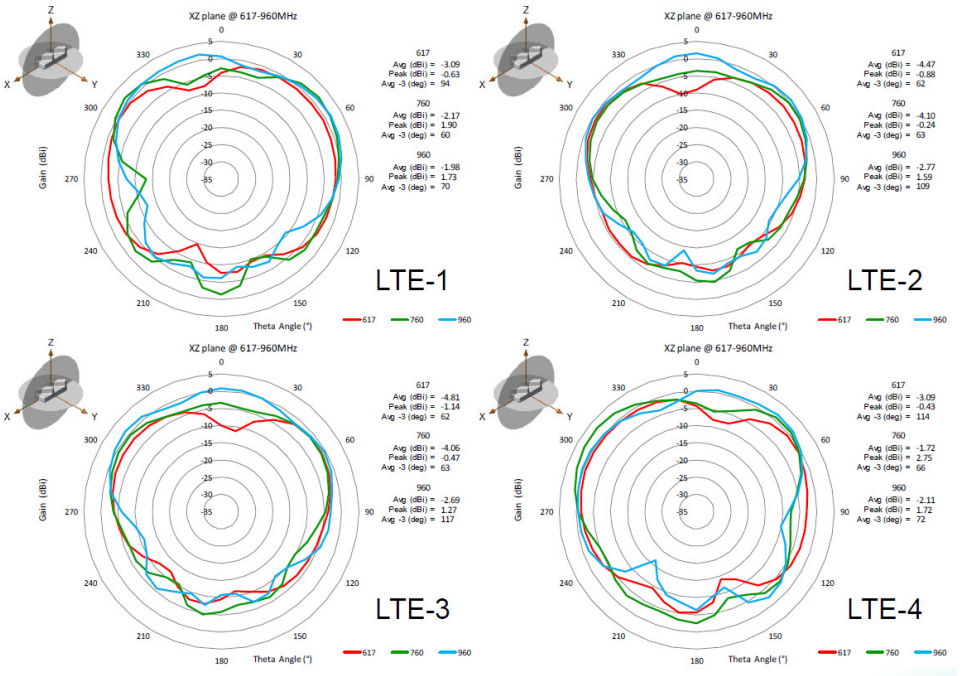

Figure 274: XZ plane @ 1710-2170MHz

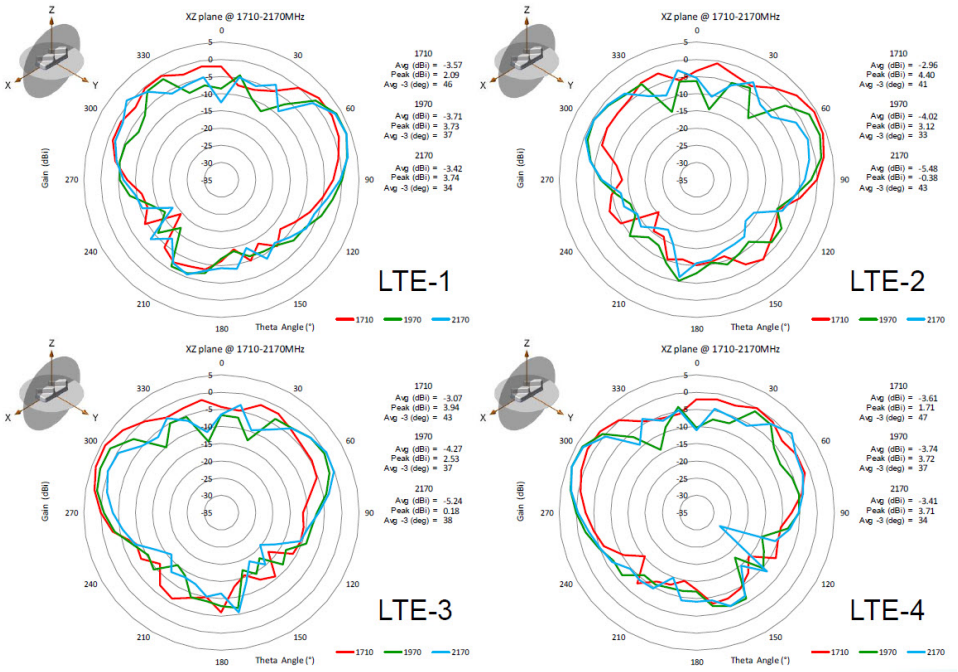

Figure 275: XZ plane @ 2300-2700MHz

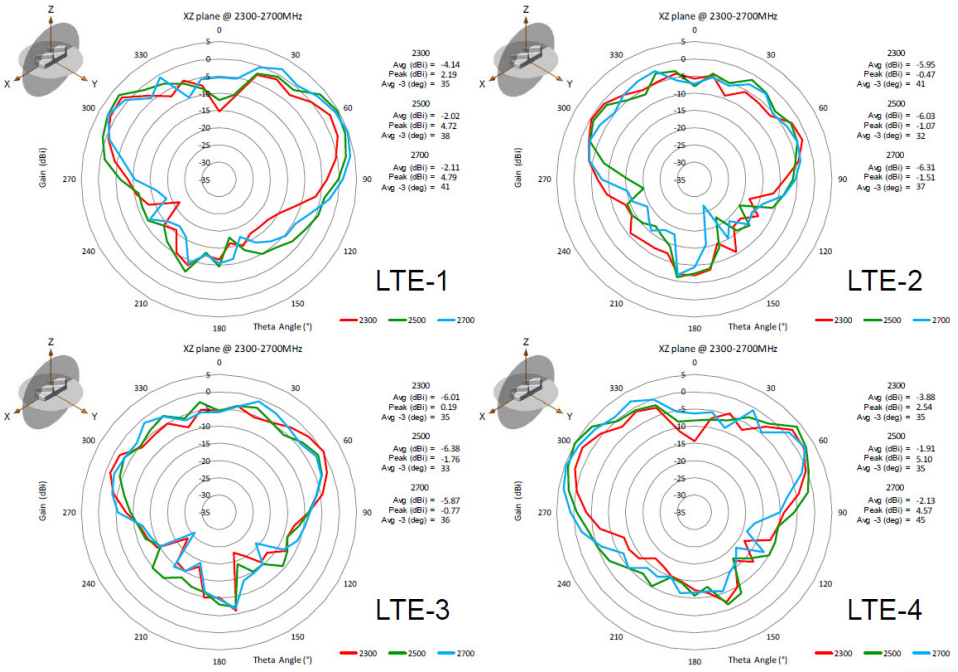

Figure 276: XZ plane @ 3400-3800MHz

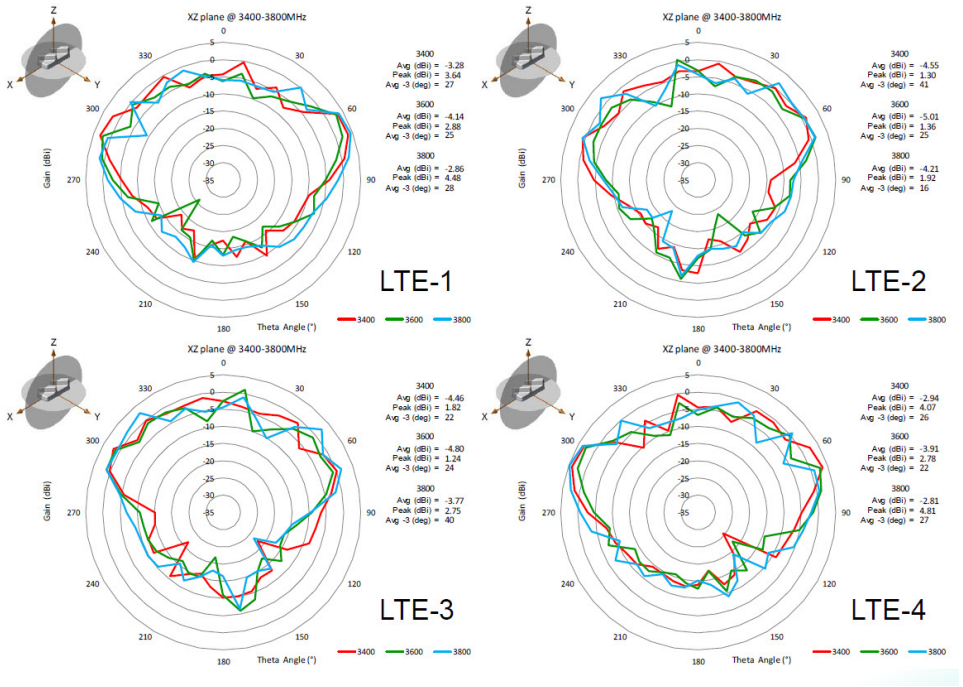

Figure 277: XZ plane @ 4900-5400MHz

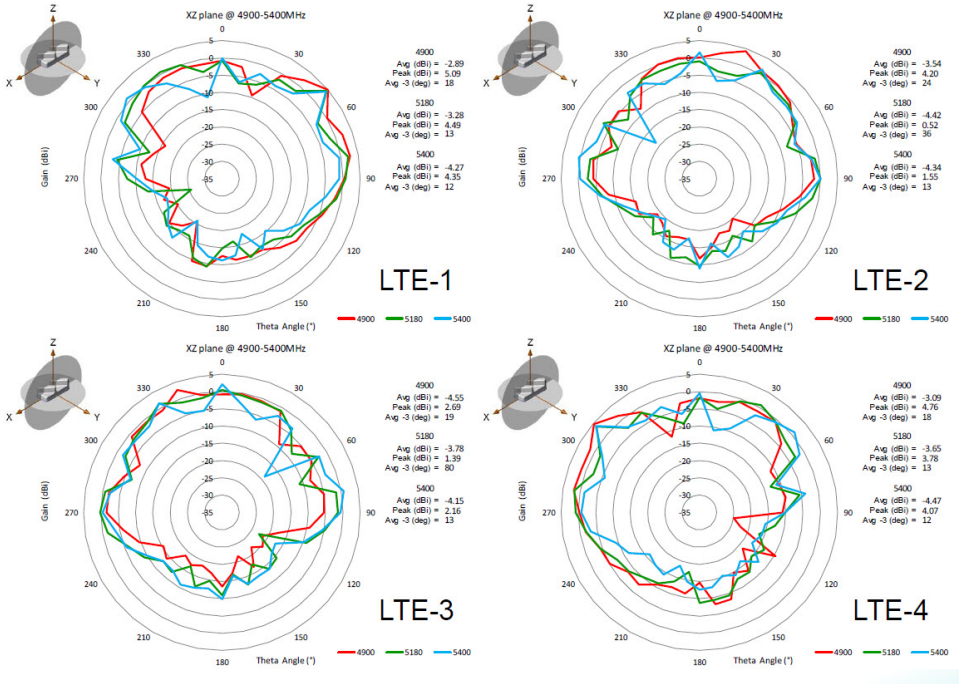

Figure 278: ZX plane @ 5625-5925MHz

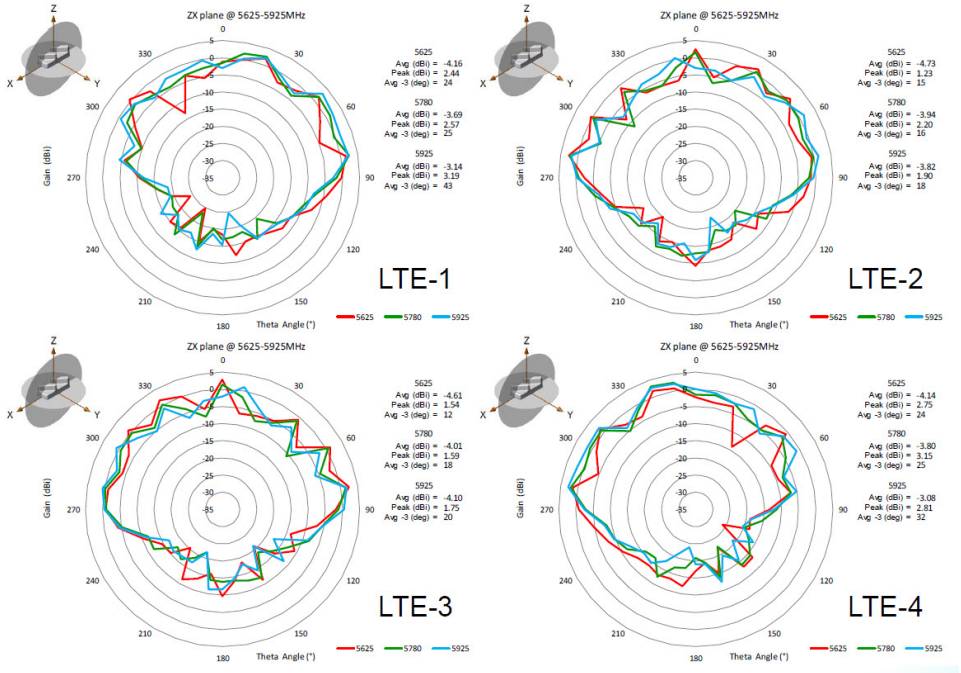

Figure 279: XY plane @ 2400-2500MHz and 4900-5925MHz

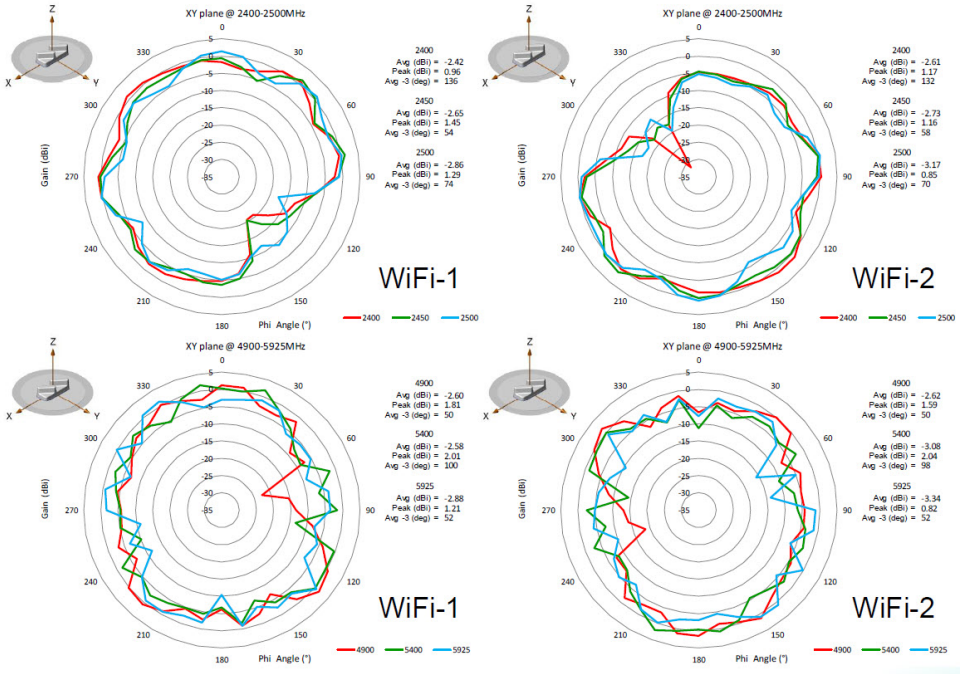

Figure 280: XZ plane @ 2400-2500MHz and 4900-5925MHz

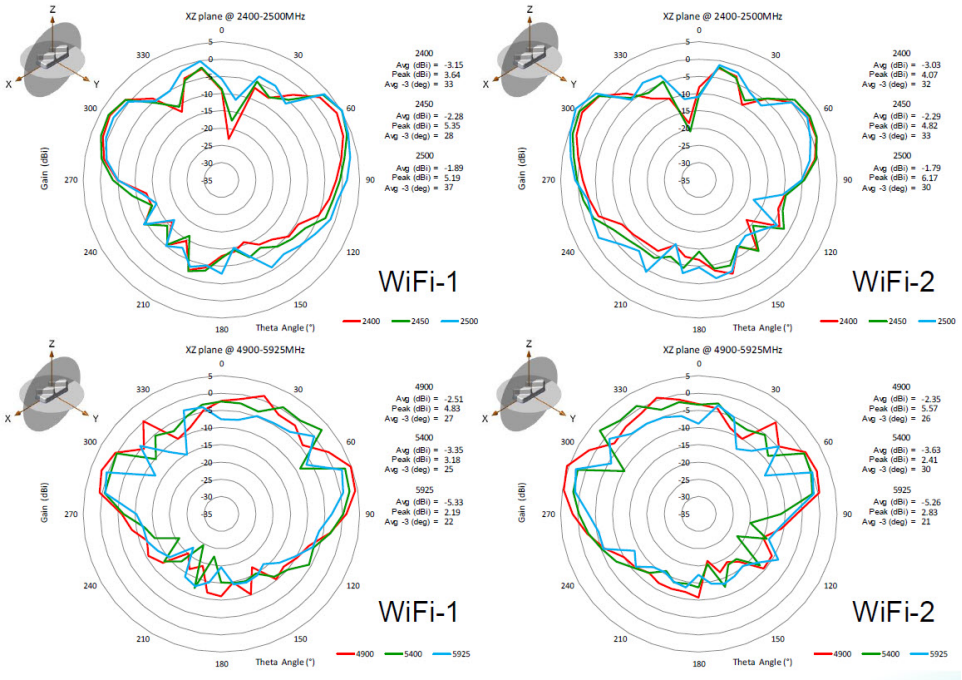

GNSS LNA Gain and out of band rejection

GNSS Passive Measurement Measured with 152mm (6”) cable.

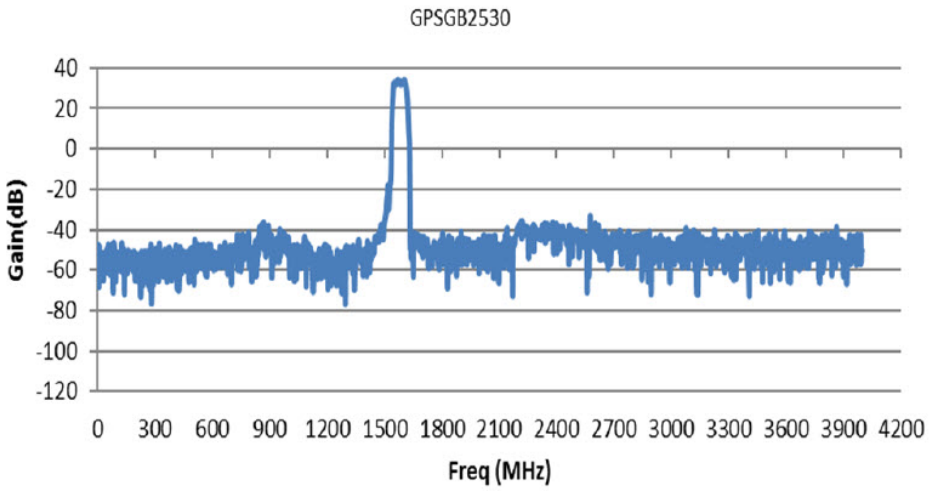

Figure 281: YZ plane @ Lower Band

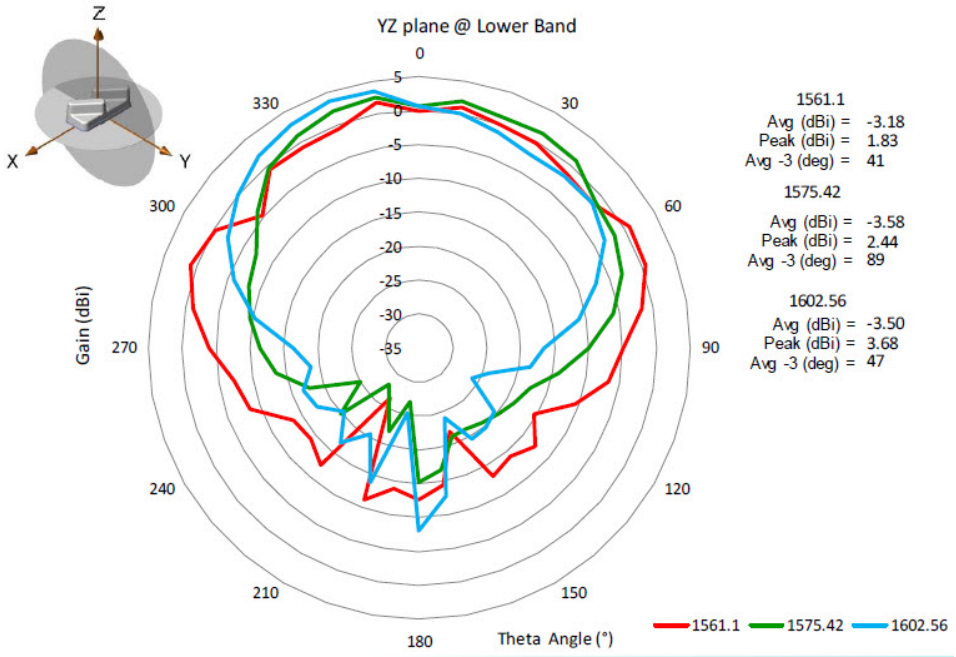

General Safety Precautions

Warning This warning symbol means danger. You are in a situation that could cause bodily injury. Before you work on any equipment, be aware of the hazards involved with electrical circuitry and be familiar with standard practices for preventing accidents. Use the statement number provided at the end of each warning to locate its translation in the translated safety warnings that accompanied this device. **Statement 1071**

Warning Do not work on the system or connect or disconnect cables during periods of lightning activity. **Statement 1001**

Warning Do not locate the outdoor antenna near overhead power lines or other electric light or power circuits, or where it can come into contact with such circuits. When installing the antenna, take extreme care not to come into contact with such circuits, as they may cause serious injury or death. For proper installation and grounding of the antenna, please refer to national and local codes (for example, U.S.:NFPA 70, National Electrical Code, Article 810, Canada:Canadian Electrical Code, Section 54). **Statement 1052**

Warning In order to comply with FCC radio frequency (RF) exposure limits, antennas should be located at a minimum of 7.9 inches (20 cm) or more from the body of all persons. **Statement 332**

Note For your safety, and to help you achieve a good installation, please read and follow these safety precautions.

Mast Mounted or Building Mounted Installations

The following instructions are common to most mast mounted or building mounted installations. For specific installation instructions for each antenna, see the antenna data-sheet and the router hardware installation guide.

- Find someone to help you—installing an antenna is often a two-person job.
- Select your installation site with safety, as well as performance, in mind. Remember that electric power lines and phone lines look alike. For your safety, assume that any overhead line can kill you.
- Contact your electric power company. Tell them your plans and ask them to come look at your proposed installation.
- Do not use a metal ladder.
- Do not work on a wet or windy day.
- Do dress properly—wear shoes with rubber soles and heels, rubber gloves, and a long-sleeved shirt or jacket.
- If the assembly starts to drop, move away from it and let it fall. Because the antenna, mast, cable, and metal guy wires are all excellent conductors of electrical current, even the slightest touch of any of these parts to a power line completes an electrical path through the antenna and the installer.
- If any part of the antenna system should come in contact with a power line, do not touch it or try to remove it yourself. Call your local power company to have it removed safely.
- If an accident should occur with the power lines, call for qualified emergency help immediately.
- Assemble your new antenna on the ground or a level surface at the installation site.
- Connect its coaxial cable while you are on the ground and attach the antenna to the mast.
- Ensure that the mast does not fall as you raise or remove it. Use a durable non-conductive rope secured at each two foot level as the mast is raised. Have an assistant tend the rope, ready to pull the mast clear of any hazards (such as power lines) should it begin to fall.
- Use the mounting bracket provided with the antenna.
- If the installation will use guy wires:
  - Install guy anchor bolts.
  - Estimate the length of guy wire and cut it before raising the mast.
  - Attach guy wires to a mast using guy rings.
  - In the case of a guyed (tall, thin mast) installation, you must have at least one assistant to hold the mast upright while the guy wires are attached and tightened to the anchor bolts.
- Attach a “DANGER” label at eye level on the mast.
- Install ground rods to remove any static electricity buildup and connect a ground wire to the mast and ground rod. Use ground rods designed for that purpose, not a spare piece of pipe.

Unused Antenna Ports

Port plugs must be installed in any unused antenna ports.

The weatherproof caps on the connectors protect the router interior from environmental elements including water, heat, cold, and dust. They are installed on unused ports before the router is shipped.

When you install a new antenna in a port with an N-connector:

- Chassis-mounted antennas—Remove the weather proof cap before installing a chassis-mounted antenna.
- External antennas—Remove weatherproof cap, then connect the supported Cisco cable to the connector.

Guidelines to Achieving Optimal RF and Antenna Performance

Antennas are a critical component of a wireless communication system. Selecting a suitable antenna, an optimal antenna location, or antenna site is essential for optimum performance of a wireless links.

This section covers general tips for optimizing RF performance of indoor and outdoor terrestrial radio systems in the 400-7125 MHz frequency range. Examples of terrestrial radio systems include 4G LTE, 5G NR, Wi-Fi, LoRa, LR-WPAN and similar. In this context GPS SPS would not be considered a terrestrial system as the signal is received from space, not from another terrestrial site.

Because the antenna transmits and receives radio signals over the air, overall RF performance of the link is susceptible to RF obstructions and common sources of RF interference that can reduce throughput and range of the system.

Follow these guidelines to optimize performance. When in doubt, consult a qualified RF professional, and check with your solution partner for specific recommendations.

Antenna Model Selection and Performance

Consider the following when planning your installation:

- When selecting the antenna, ensure that it covers the frequency ranges or frequency bands of interest, and that it has good RF parameters such as antenna efficiency, VSWR and suitable radiation pattern for every frequency range that your application will use with this antenna.
- Antenna pattern is important. Omni-directional antennas have lower gain, but allow communicating to devices in all azimuth directions. Directional antennas concentrate the beam in a specific direction, making them ideal for point to point communication.
- When a system has multiple RF ports for receive and / or transmit, as is the case for 4G LTE , 5G NR or Wi-Fi, it is highly recommended to populate all the RF ports with suitable antennas to take advantage of MIMO, rather than rely on a single port or single antenna to save on cost. Please see the MIMO section for a detailed description of MIMO benefits.
- For RF systems that support multiple RF ports and multiple RF standards such as LTE, Wi-Fi, and GPS: consider using a multi-element antenna that integrates multiple antennas under the same radome (cover). Doing so may reduce cost compared to deploying and mounting a discrete single port antenna for every RF port.
- For communication between fixed infrastructure devices, such as mesh nodes or a point-to-point backhaul link, each device should have an antenna with the same polarization. If communicating with mobile

devices that might be randomly oriented, consider dual-polarized antennas, such as those with both vertical and horizontal or slant +45° and -45° polarized elements.

Antenna Environmental Specifications

The selected antenna must have suitable mechanical and environmental specifications for the environment where it will be deployed. For example, shock and vibration specifications for transportation, corrosion resistant construction for marine and oil and gas industries, or IP (ingress protection) rating for outdoor deployment. Indoor antennas are typically not suitable for harsh industrial environments. Please check with your system integrator for environmental requirements for your application.

Antenna Accessories and Mounting

Consider the following when planning your installation:

- Carefully consider what type of other RF accessories, besides antenna, such as RF cables, lightning arrestors or RF adapters may be required in your installations. It is best to minimize long RF cable runs due to RF signal losses in the cable. Thinner RF cables have more RF loss , thicker cables are less flexible and more expensive.
- Carefully consider how the antenna will be physically mounted, as this may affect antenna selection. For example, a stud mount mechanical mounting design is a better fit for mounting on top of an electrical cabinet than a mast mount antenna.
- For outdoor deployments, follow installation instructions for the antenna. It is good practice to keep protective covers on the radio's RF ports and any antenna or accessory RF ports until the moment the interfaces are mated. This reduces chances of contamination, trapping water or condensation inside the connector, or accidental damage to RF interfaces.

MIMO Performance and Arrays

MIMO systems deliver benefits of higher SNR, higher reliability and higher throughput compared to single antenna systems. In more technical terms, MIMO delivers array gain, diversity gain and multiplexing gain compared to single antenna.

- Array gain — Improvement in SNR (signal to noise ratio) by coherently combining signals from multiple antennas. For example, increasing SNR through beamforming techniques.
- Diversity gain — Improvement in reliability by mitigating deep fading or strong destructive EM wave interference. For example, in a two-antenna system, if one antenna is experiencing deep fading due to an EM destructive null at its location at a given instant, the other antenna is unlikely to have a null at the same instant, and the combined SNR stays at a reliable level. In contrast, a single antenna would see SNR oscillating between good SNR and very poor SNR and reliability would degrade.
- Multiplexing gain — Increase in system capacity or throughput by sending independent data over multiple spatial streams simultaneously. The number of streams cannot be more than the number of antennas. For example, to support three spatial streams, a minimum of three antennas is required. Often there may be additional antennas for diversity or redundancy, such as in the case of 4x4:3, or 4x4 MIMO with 3 spatial streams.

If deploying multiple single-element antennas for a MIMO system in an array, ensure sufficient spacing between the antennas. Omnidirectional elements should generally be at least one wavelength apart at the lowest operating frequency.

Consider the following:

- For Wi-Fi systems operating in the 2.4, 5, and/or 6 GHz bands, space elements at least 5 inches (12.5 cm) apart.
- For 4G LTE and 5G systems with the lowest operating frequency of 617 MHz , space elements at least 20 inches (50 cm) apart.
- Note that spacing between elements inside multi-element MIMO antennas is often less than one wavelength. However multi-element antennas are engineered with MIMO performance in mind, by providing antenna diversity through pattern, polarization, and isolation between MIMO elements.

Antenna siting and location

Consider the following when planning your installation:

- Plan antenna location ahead of time. Ideal location for an antenna is in LOS (line of sight) of the counterpart that it is trying to communicate with. Under LOS conditions the signals propagate directly between the two communication nodes, without relying on signal bouncing off a wall or other structure to reach the counterpart. This is sometimes not possible to achieve in practice, but it is a useful goal to keep in mind when optimizing antenna location.
- While it is good to keep RF cables short, it is most desirable for an antenna to be in the best location it can be to provide the desired coverage.
- For large deployments involving multiple units communicating with each other across a complex urban or industrial landscape, consider running an RF propagation modeling study to predict approximate simulated coverage maps and determine initial placement of the units. A propagation study may help reduce overall deployment cost by discovering and mitigating issues with RF coverage before the infrastructure is physically installed.
- Keep the antenna away from metal obstructions such as heating and air-conditioning ducts, large ceiling trusses, building superstructures, and major power cabling runs. One exception is if the antenna is designed to be mounted on a ground plane. If mounting on a ground plane, mount the antenna on a flat metal surface away from adjacent obstructions.
- It is strongly recommended not to install antennas directly on the router or access point (AP), unless the router or AP is specifically engineered to directly mount the antennas. Products that are engineered for direct mounting of antennas specifically address each of the below issues.
- Reasons to mount antennas away from the router include:
    - Router location may not be optimal location for antenna to communicate with the counterpart wirelessly, so router and antenna may need to be in different locations.
    - Router may have a clutter of Ethernet cable and power cables around it, which will obstruct antenna signal.
    - A number of routers, such as the IR1835, are modular. They have plug-in RF modules for Wi-Fi , 4G LTE or 5G NR such as WP-WIFI6, P-LTEAP18-GL, P-5GS6-GL. These modules have RF connectors spaced close together, and while it is mechanically possible to install four or five antennas directly attached, this will result in significant degradation to RF performance of antennas due to mutual de-tuning between closely spaced antennas. It is strongly recommended to install antennas away from the chassis in modular cases.

- If installing an antenna indoors, consider that the density and electromagnetic properties of the materials used in the building construction determines the number of walls the signal can pass through and still maintain adequate coverage.
  - Paper and vinyl walls have very little effect on signal penetration.
  - Solid and pre-cast concrete walls limit signal penetration to one or two walls without degrading coverage.
  - Concrete and wood block walls limit signal penetration to three or four walls.
  - A signal can penetrate five or six walls constructed of drywall or wood.
  - A thick metal wall causes signals to reflect off, causing poor penetration.
  - A chain link fence or wire mesh spaced between 1 and 1 1/2 in. (2.5 and 3.8 cm) acts as a harmonic reflector that blocks a 2.4-GHz radio signal.
  - Install the antenna away from microwave ovens and 2-GHz cordless phones. These products can cause signal interference because they operate in the same frequency range as the device your antenna is connected to.

Installing the Antenna

The antenna installation includes the following procedures:

Contents of the Antenna Kit

The antenna kit contains:

- 1 x Cisco ANT-7-5G4WL2G1-O antenna

Tools and Equipment Required

In addition to the parts included in the antenna kit described in the previous section, you must provide the following tool to install the antenna on the router:

- Open-ended wrench
- Electric drill



Note This list does not include the tools and equipment required to assemble and erect the tower, mast, or other structure you intend to mount your antenna on.

Mounting the Antenna

Note A clean, flat surface at least 20 x 20 cm (8 x 8 in.) in area is required for mounting the antenna.

Follow these instructions to mount the antenna, refering to the Antenna Assembly:

1. Mark the desired location where you plan to mount the antenna and create a hole through the surface The diameter of the hole must be at least Ø1.063” (27.0mm).
2. Thread the cables through the hole and insert the aluminum stud on the underside of the antenna into the hole. Ensure that the rubber gasket on the underside of the antenna sits flush against the mounting surface.
3. Inside the vehicle, place the rubber sealing washer around the stud. Then place the metal washer and the metal nut onto the stud.
4. Tighten the nut.

Connecting the Antenna to the Router

To attach the router-end of the cable to your router, please see the Cisco Industrial Integrated Services Routers page and view the respective Hardware Installation Guide .

Note Coaxial cable loses efficiency as the frequency increases, resulting in signal loss. The cable should be kept as short as possible because cable length also determines the amount of signal loss—the longer the cable length or run, the greater the loss).

Communications, Services, and Additional Information

- To receive timely, relevant information from Cisco, sign up at Cisco Profile Manager.
- To get the business impact you’re looking for with the technologies that matter, visit Cisco Services.
- To submit a service request, visit Cisco Support.
- To discover and browse secure, validated enterprise-class apps, products, solutions, and services, visit Cisco DevNet.
- To obtain general networking, training, and certification titles, visit Cisco Press.
- To find warranty information for a specific product or product family, access Cisco Warranty Finder.

Cisco Bug Search Tool

Cisco Bug Search Tool (BST) is a web-based tool that acts as a gateway to the Cisco bug tracking system that maintains a comprehensive list of defects and vulnerabilities in Cisco products and software. BST provides you with detailed defect information about your products and software.

Documentation Feedback

To provide feedback about Cisco technical documentation, use the feedback form available in the right pane of every online document.

Cisco Support Community

Cisco Support Community is a forum for you to ask and answer questions, share suggestions, and collaborate with your peers. Join the forum at https://supportforums.cisco.com/index.jspa.

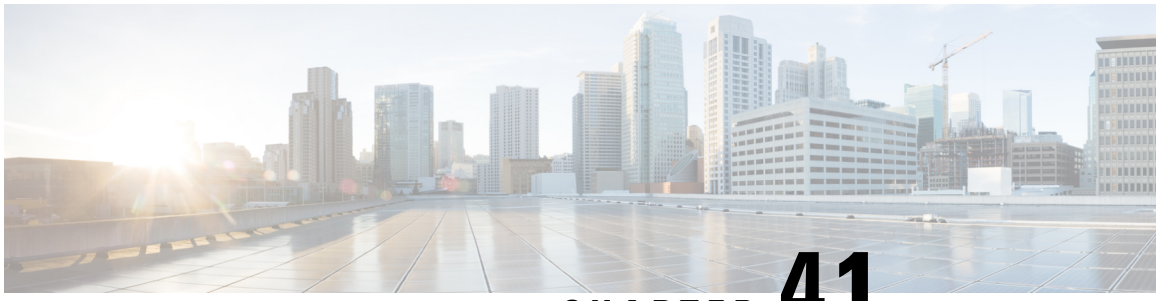

CHAPTER 41

Cisco GNSS Antenna (ANT-GNSS-OUT-TNC)

This chapter contains the following sections:

- Overview, on page 695
- Electrical Specifications, on page 696
- Mechanical Specifications, on page 697
- Environmental Specifications, on page 697
- Mechanical Drawing, on page 697
- Radiation Charts, on page 698
- Radiation Patterns, on page 700
- General Safety Precautions, on page 702
- Guidelines to Achieving Optimal RF and Antenna Performance, on page 704

Overview

The Cisco GNSS Antenna (ANT-GNSS-OUT-TNC) is designed to cover a frequency range of 1560 to 1606 MHz.

Features include the following:

- 30dB LNA gain
- Features a GNSS filter-LNA-filter-LNA arrangement to maximize performance and allow co-location with other radios
- Current consumption: <10mA
- IP66 & IP67
- Includes mounting bracket and corresponding hardware

Applications include the following:

- GPS, Glonass , Beidou
- Active antenna for timing
- Location based services

Contents of the Antenna Kit

The contents of the package include the antenna, a pole mount bracket, and a U bolt.

Figure 282: Antenna Kit



Electrical Specifications

The following table is a summary of the electrical specifications:

Antenna Type	Patch, active
Frequency	1561.1 ± 2.1 MHz 1575.42 ± 1.023 MHz 1602.6 ± 4.0 MHz
Nominal Impedance	50 Ω
Gain	1dBic ± 1dB
LNA Gain	30dB ± 2dB

Polarization	RHCP
Current consumption	<10mA

Mechanical Specifications

The following table is a summary of the mechanical specifications:

Overall Length	Refer to the Mechanical Drawing, on page 697
Weight	420g
Color/Material	Grey/Polycarbonate
Connector type	TNC Male
Cable type	LMR-100 (VW-1/FT-1 flame rating)
Cable Length	4572 mm (180 in)

Environmental Specifications

The following table is a summary of the mechanical specifications:

Operating Temperature	-40 to 85° C
Storage Temperature	-40 to 85° C
Ingress Protection	IP66 & IP67
RoHS Compliant	Yes

Mechanical Drawing

The following diagram provides mechanical details of the antenna and guidance for installation.

Note All measurements are in millimeters.

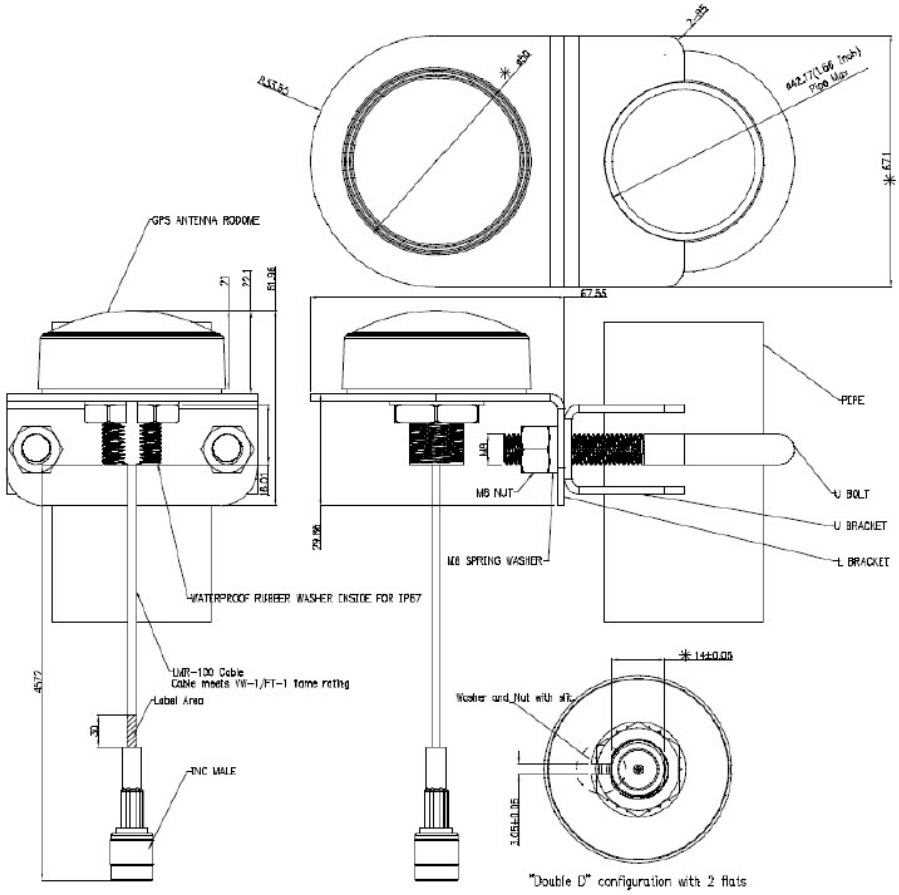

Radiation Charts

The following figures show the antenna efficiency, and gain.

Efficiency

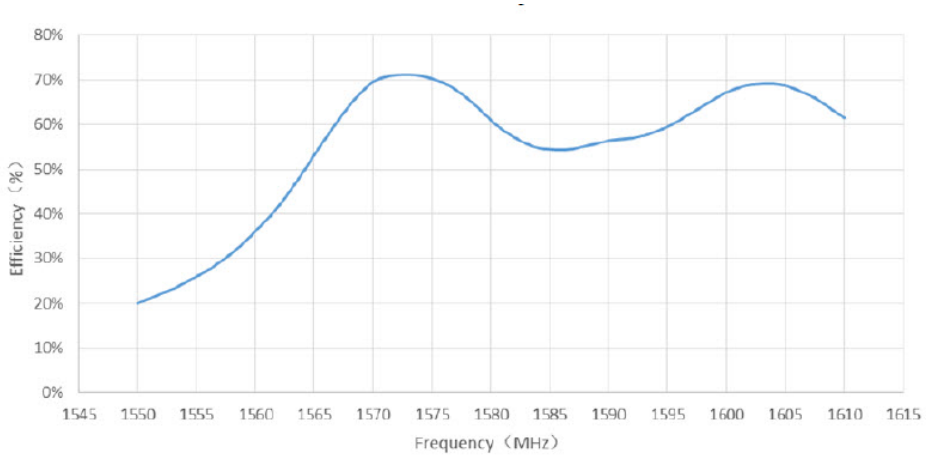

Gain

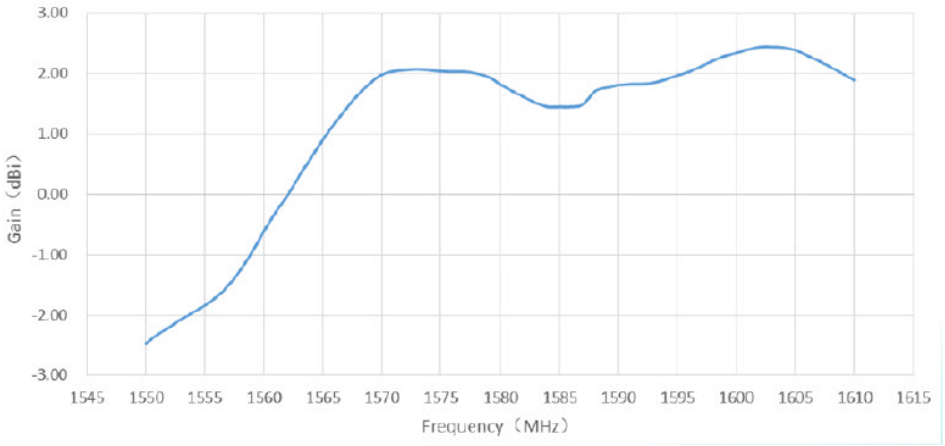

RHCP Gain and LHCP Gain

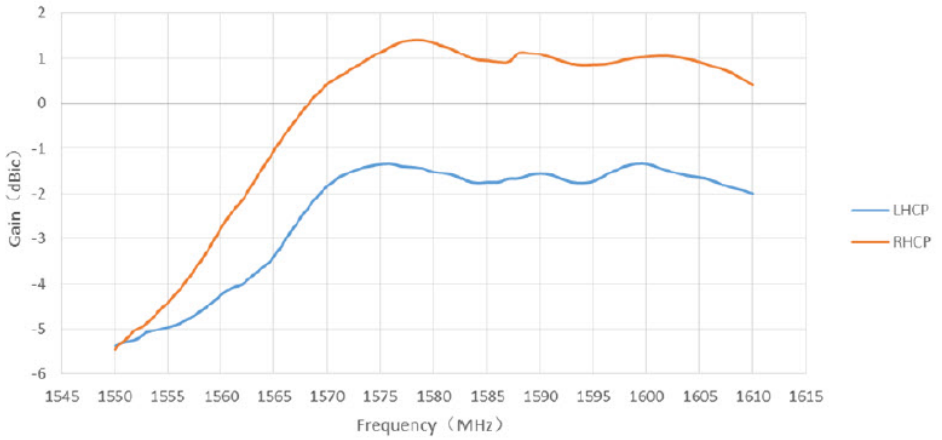

Radiation Patterns

The following figures show the antenna radiation patterns without a ground plane.

Antenna Orientation

The following figure shows the orientation of the X, Y, and Z axis.

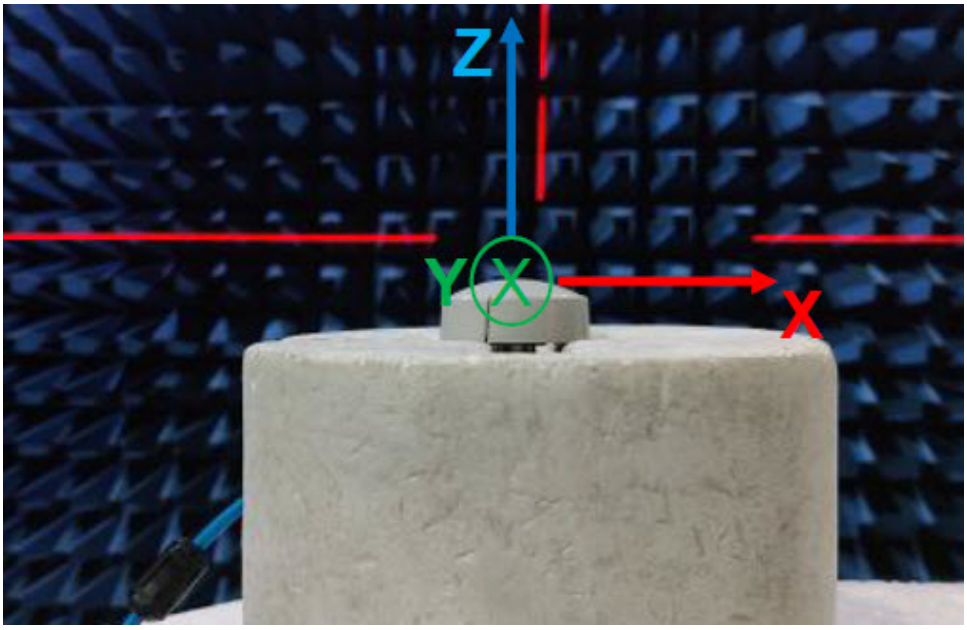

YZ Plane

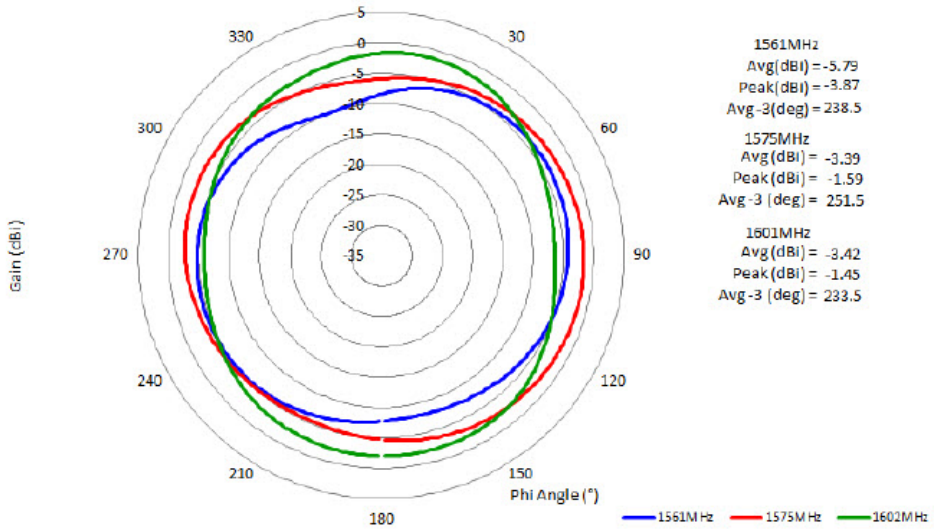

XY Plane

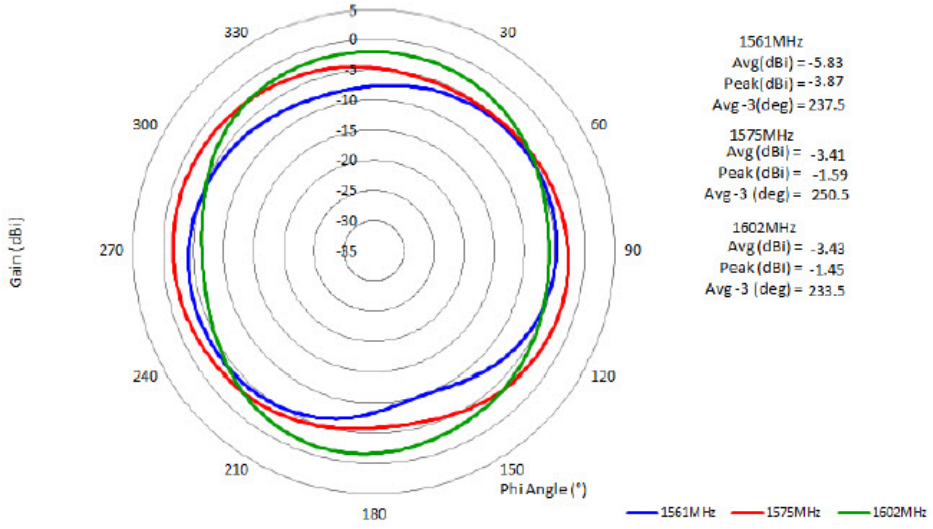

ZX Plane

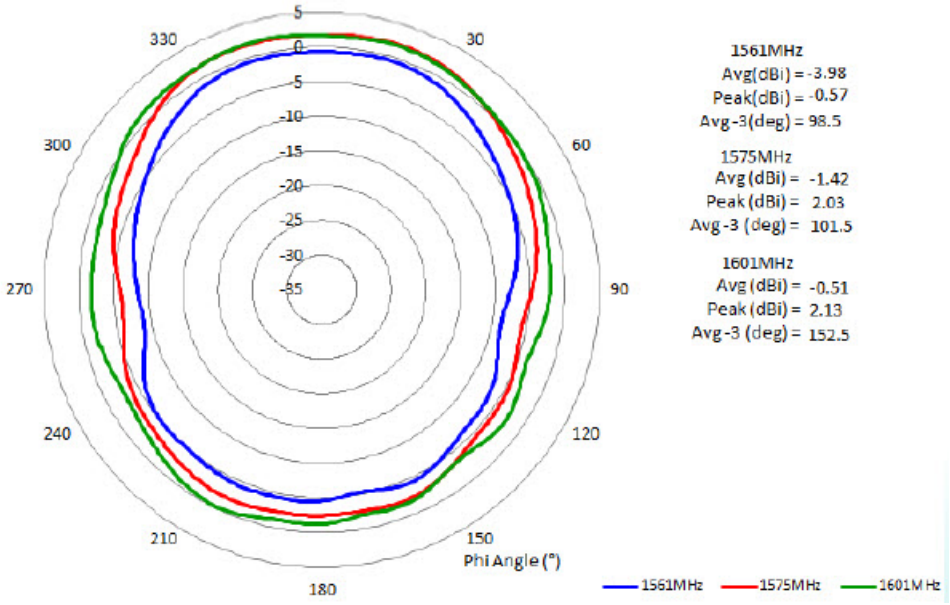

General Safety Precautions

Warning This warning symbol means danger. You are in a situation that could cause bodily injury. Before you work on any equipment, be aware of the hazards involved with electrical circuitry and be familiar with standard practices for preventing accidents. Use the statement number provided at the end of each warning to locate its translation in the translated safety warnings that accompanied this device. **Statement 1071**

Warning Do not work on the system or connect or disconnect cables during periods of lightning activity. **Statement 1001**

Warning Do not locate the outdoor antenna near overhead power lines or other electric light or power circuits, or where it can come into contact with such circuits. When installing the antenna, take extreme care not to come into contact with such circuits, as they may cause serious injury or death. For proper installation and grounding of the antenna, please refer to national and local codes (for example, U.S.:NFPA 70, National Electrical Code, Article 810, Canada:Canadian Electrical Code, Section 54). **Statement 1052**

Warning In order to comply with FCC radio frequency (RF) exposure limits, antennas should be located at a minimum of 7.9 inches (20 cm) or more from the body of all persons. **Statement 332**



Note For your safety, and to help you achieve a good installation, please read and follow these safety precautions.

Mast Mounted or Building Mounted Installations

The following instructions are common to most mast mounted or building mounted installations. For specific installation instructions for each antenna, see the antenna data-sheet and the router hardware installation guide.

- Find someone to help you—installing an antenna is often a two-person job.
- Select your installation site with safety, as well as performance, in mind. Remember that electric power lines and phone lines look alike. For your safety, assume that any overhead line can kill you.
- Contact your electric power company. Tell them your plans and ask them to come look at your proposed installation.
- Do not use a metal ladder.
- Do not work on a wet or windy day.
- Do dress properly—wear shoes with rubber soles and heels, rubber gloves, and a long-sleeved shirt or jacket.
- If the assembly starts to drop, move away from it and let it fall. Because the antenna, mast, cable, and metal guy wires are all excellent conductors of electrical current, even the slightest touch of any of these parts to a power line completes an electrical path through the antenna and the installer.
- If any part of the antenna system should come in contact with a power line, do not touch it or try to remove it yourself. Call your local power company to have it removed safely.
- If an accident should occur with the power lines, call for qualified emergency help immediately.
- Assemble your new antenna on the ground or a level surface at the installation site.
- Connect its coaxial cable while you are on the ground and attach the antenna to the mast.
- Ensure that the mast does not fall as you raise or remove it. Use a durable non-conductive rope secured at each two foot level as the mast is raised. Have an assistant tend the rope, ready to pull the mast clear of any hazards (such as power lines) should it begin to fall.
- Use the mounting bracket provided with the antenna.
- If the installation will use guy wires:
    - Install guy anchor bolts.
    - Estimate the length of guy wire and cut it before raising the mast.
    - Attach guy wires to a mast using guy rings.
    - In the case of a guyed (tall, thin mast) installation, you must have at least one assistant to hold the mast upright while the guy wires are attached and tightened to the anchor bolts.
- Attach a “DANGER” label at eye level on the mast.
- Install ground rods to remove any static electricity buildup and connect a ground wire to the mast and ground rod. Use ground rods designed for that purpose, not a spare piece of pipe.

Unused Antenna Ports

Port plugs must be installed in any unused antenna ports.

The weatherproof caps on the connectors protect the router interior from environmental elements including water, heat, cold, and dust. They are installed on unused ports before the router is shipped.

When you install a new antenna in a port with an N-connector:

- Chassis-mounted antennas—Remove the weather proof cap before installing a chassis-mounted antenna.
- External antennas—Remove weatherproof cap, then connect the supported Cisco cable to the connector.

Guidelines to Achieving Optimal RF and Antenna Performance

Antennas are a critical component of a wireless communication system. Selecting a suitable antenna, an optimal antenna location, or antenna site is essential for optimum performance of a wireless links.

This section covers general tips for optimizing RF performance of indoor and outdoor terrestrial radio systems in the 400-7125 MHz frequency range. Examples of terrestrial radio systems include 4G LTE, 5G NR, Wi-Fi, LoRa, LR-WPAN and similar. In this context GPS SPS would not be considered a terrestrial system as the signal is received from space, not from another terrestrial site.

Because the antenna transmits and receives radio signals over the air, overall RF performance of the link is susceptible to RF obstructions and common sources of RF interference that can reduce throughput and range of the system.

Follow these guidelines to optimize performance. When in doubt, consult a qualified RF professional, and check with your solution partner for specific recommendations.

Antenna Model Selection and Performance

Consider the following when planning your installation:

- When selecting the antenna, ensure that it covers the frequency ranges or frequency bands of interest, and that it has good RF parameters such as antenna efficiency, VSWR and suitable radiation pattern for every frequency range that your application will use with this antenna.
- Antenna pattern is important. Omni-directional antennas have lower gain, but allow communicating to devices in all azimuth directions. Directional antennas concentrate the beam in a specific direction, making them ideal for point to point communication.
- When a system has multiple RF ports for receive and / or transmit, as is the case for 4G LTE , 5G NR or Wi-Fi, it is highly recommended to populate all the RF ports with suitable antennas to take advantage of MIMO, rather than rely on a single port or single antenna to save on cost. Please see the MIMO section for a detailed description of MIMO benefits.
- For RF systems that support multiple RF ports and multiple RF standards such as LTE, Wi-Fi, and GPS: consider using a multi-element antenna that integrates multiple antennas under the same radome (cover). Doing so may reduce cost compared to deploying and mounting a discrete single port antenna for every RF port.
- For communication between fixed infrastructure devices, such as mesh nodes or a point-to-point backhaul link, each device should have an antenna with the same polarization. If communicating with mobile

devices that might be randomly oriented, consider dual-polarized antennas, such as those with both vertical and horizontal or slant +45° and -45° polarized elements.

Antenna Environmental Specifications

The selected antenna must have suitable mechanical and environmental specifications for the environment where it will be deployed. For example, shock and vibration specifications for transportation, corrosion resistant construction for marine and oil and gas industries, or IP (ingress protection) rating for outdoor deployment. Indoor antennas are typically not suitable for harsh industrial environments. Please check with your system integrator for environmental requirements for your application.

Antenna Accessories and Mounting

Consider the following when planning your installation:

- Carefully consider what type of other RF accessories, besides antenna, such as RF cables, lightning arrestors or RF adapters may be required in your installations. It is best to minimize long RF cable runs due to RF signal losses in the cable. Thinner RF cables have more RF loss , thicker cables are less flexible and more expensive.
- Carefully consider how the antenna will be physically mounted, as this may affect antenna selection. For example, a stud mount mechanical mounting design is a better fit for mounting on top of an electrical cabinet than a mast mount antenna.
- For outdoor deployments, follow installation instructions for the antenna. It is good practice to keep protective covers on the radio's RF ports and any antenna or accessory RF ports until the moment the interfaces are mated. This reduces chances of contamination, trapping water or condensation inside the connector, or accidental damage to RF interfaces.

MIMO Performance and Arrays

MIMO systems deliver benefits of higher SNR, higher reliability and higher throughput compared to single antenna systems. In more technical terms, MIMO delivers array gain, diversity gain and multiplexing gain compared to single antenna.

- Array gain — Improvement in SNR (signal to noise ratio) by coherently combining signals from multiple antennas. For example, increasing SNR through beamforming techniques.
- Diversity gain — Improvement in reliability by mitigating deep fading or strong destructive EM wave interference. For example, in a two-antenna system, if one antenna is experiencing deep fading due to an EM destructive null at its location at a given instant, the other antenna is unlikely to have a null at the same instant, and the combined SNR stays at a reliable level. In contrast, a single antenna would see SNR oscillating between good SNR and very poor SNR and reliability would degrade.
- Multiplexing gain — Increase in system capacity or throughput by sending independent data over multiple spatial streams simultaneously. The number of streams cannot be more than the number of antennas. For example, to support three spatial streams, a minimum of three antennas is required. Often there may be additional antennas for diversity or redundancy, such as in the case of 4x4:3, or 4x4 MIMO with 3 spatial streams.

If deploying multiple single-element antennas for a MIMO system in an array, ensure sufficient spacing between the antennas. Omnidirectional elements should generally be at least one wavelength apart at the lowest operating frequency.

Consider the following:

- For Wi-Fi systems operating in the 2.4, 5, and/or 6 GHz bands, space elements at least 5 inches (12.5 cm) apart.
- For 4G LTE and 5G systems with the lowest operating frequency of 617 MHz , space elements at least 20 inches (50 cm) apart.
- Note that spacing between elements inside multi-element MIMO antennas is often less than one wavelength. However multi-element antennas are engineered with MIMO performance in mind, by providing antenna diversity through pattern, polarization, and isolation between MIMO elements.

Antenna siting and location

Consider the following when planning your installation:

- Plan antenna location ahead of time. Ideal location for an antenna is in LOS (line of sight) of the counterpart that it is trying to communicate with. Under LOS conditions the signals propagate directly between the two communication nodes, without relying on signal bouncing off a wall or other structure to reach the counterpart. This is sometimes not possible to achieve in practice, but it is a useful goal to keep in mind when optimizing antenna location.
- While it is good to keep RF cables short, it is most desirable for an antenna to be in the best location it can be to provide the desired coverage.
- For large deployments involving multiple units communicating with each other across a complex urban or industrial landscape, consider running an RF propagation modeling study to predict approximate simulated coverage maps and determine initial placement of the units. A propagation study may help reduce overall deployment cost by discovering and mitigating issues with RF coverage before the infrastructure is physically installed.
- Keep the antenna away from metal obstructions such as heating and air-conditioning ducts, large ceiling trusses, building superstructures, and major power cabling runs. One exception is if the antenna is designed to be mounted on a ground plane. If mounting on a ground plane, mount the antenna on a flat metal surface away from adjacent obstructions.
- It is strongly recommended not to install antennas directly on the router or access point (AP), unless the router or AP is specifically engineered to directly mount the antennas. Products that are engineered for direct mounting of antennas specifically address each of the below issues.
- Reasons to mount antennas away from the router include:
  - Router location may not be optimal location for antenna to communicate with the counterpart wirelessly, so router and antenna may need to be in different locations.
  - Router may have a clutter of Ethernet cable and power cables around it, which will obstruct antenna signal.
  - A number of routers, such as the IR1835, are modular. They have plug-in RF modules for Wi-Fi , 4G LTE or 5G NR such as WP-WIFI6, P-LTEAP18-GL, P-5GS6-GL. These modules have RF connectors spaced close together, and while it is mechanically possible to install four or five antennas directly attached, this will result in significant degradation to RF performance of antennas due to mutual de-tuning between closely spaced antennas. It is strongly recommended to install antennas away from the chassis in modular cases.

- If installing an antenna indoors, consider that the density and electromagnetic properties of the materials used in the building construction determines the number of walls the signal can pass through and still maintain adequate coverage.
  - Paper and vinyl walls have very little effect on signal penetration.
  - Solid and pre-cast concrete walls limit signal penetration to one or two walls without degrading coverage.
  - Concrete and wood block walls limit signal penetration to three or four walls.
  - A signal can penetrate five or six walls constructed of drywall or wood.
  - A thick metal wall causes signals to reflect off, causing poor penetration.
  - A chain link fence or wire mesh spaced between 1 and 1 1/2 in. (2.5 and 3.8 cm) acts as a harmonic reflector that blocks a 2.4-GHz radio signal.
  - Install the antenna away from microwave ovens and 2-GHz cordless phones. These products can cause signal interference because they operate in the same frequency range as the device your antenna is connected to.

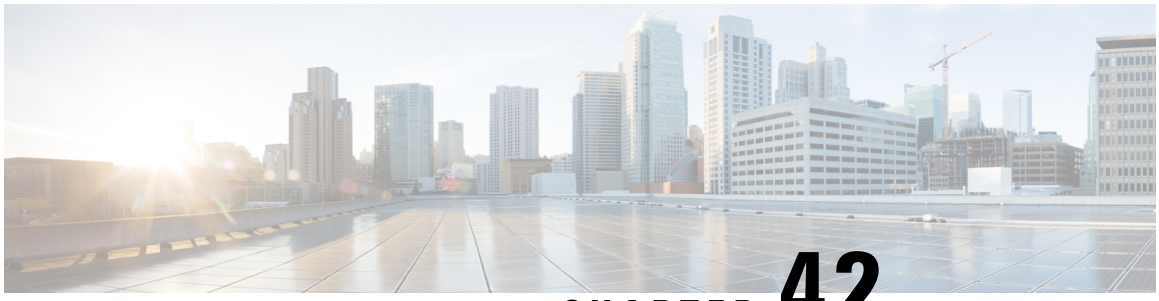

CHAPTER 42

Cisco GPS Antenna (ANT-GPS-OUT-TNC)

This chapter contains the following:

- Overview, on page 709
- Technical Specifications, on page 709
- Mechanical Drawing, on page 712
- General Safety Precautions, on page 713
- Guidelines to Achieving Optimal RF and Antenna Performance, on page 715
- Antenna Installation, on page 718
- Communications, Services, and Additional Information, on page 719

Overview

The Cisco GPS Antenna is designed to cover a domestic frequency of 1575 MHz.

This antenna is compatible with any Cisco device that uses GPS, and is compatible with active GPS antennas with DC specifications given below. Connector adapters may be required from TNC(m) to the required interface. The antenna is a rugged outdoor antenna, and is IP67 rated.

Technical Specifications

The GPS antenna features the following:

- Outdoor
- Low-profile housing
- Integrated LMR-100 cable with right-angle TNC(m) male connector

Figure 283: GPS Antenna

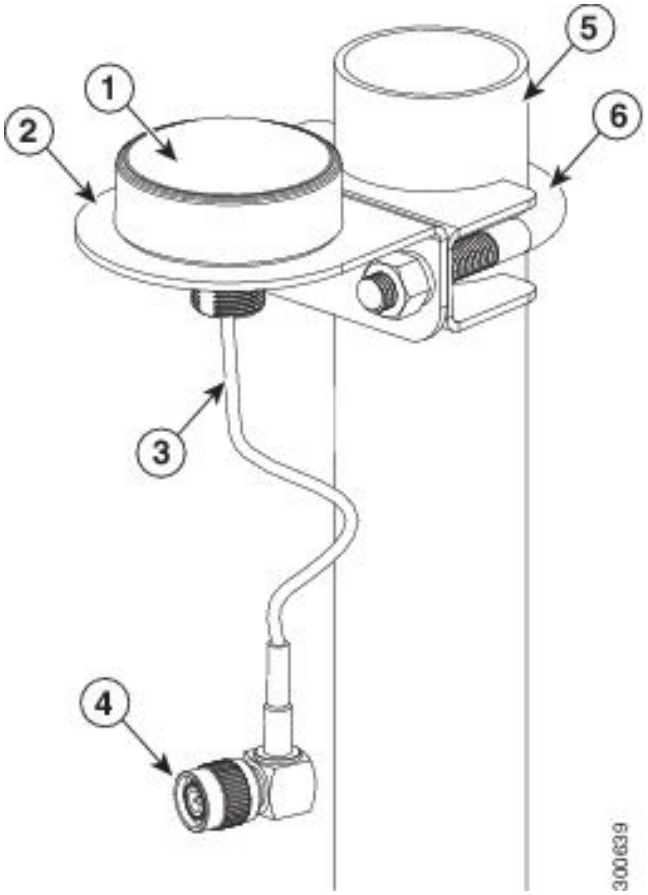

1	GPS antenna
2	Mounting bracket
3	LMR-100 cable(15’)
4	Right-angle TNC male connector
5	Pipe (mast)
6	U-bolt connected to U-bracket

RF Specifications

The following is a summary of the antenna radio frequency (RF) specifications:

Specification	Cisco GPS Antenna (ANT-GPS-OUT-TNC)
Type	Patch, active

Specification	Cisco GPS Antenna (ANT-GPS-OUT-TNC)
Operating frequency range	1575.42 MHz +/- 5 MHz
Impedance	50 ohm, nominal
VSWR	2.0 max. in band
Gain	4.0 dBi min. @ Zenith
Minimum gain	1 dBi @ 10-degrees elevation
Pattern type	Hemispherical
Polarization	Circular RHCP
LNA gain	25 dB +/-2 dB
Front end GPS filter	This antenna features a GPS RF filter in front of the LNA to enable co-location with other radios.
Out-of-band attenuation	20 dB min. at 1575 +/- 50 MHz
DC voltage	3 to 5 VDC
Current draw	20 mA max. @ 3.3 VDC +/- .3 VDC

Mechanical and Environmental Specifications

The following is a summary of the mechanical and environmental antenna specifications:

Specification	Cisco GPS Antenna (ANT-GPS-OUT-TNC)
Environment	Outdoor (IP67)
Height	0.87 in. (2.21 cm)
Diameter (maximum, at base)	2.0 in. (5.0 cm)
Connector	Right-angle TNC(m)
Cable	LMR-100A, 15ft (4.57m)
Operating temperature	-40 to 185 degrees Fahrenheit (-40 to 85 degrees Centigrade)
Wind speed rating	165 MPH
Compliance	ROHS

Mechanical Drawing

Figure 284: Mechanical Drawing for the ANT-GPS-OUT-TNC Antenna

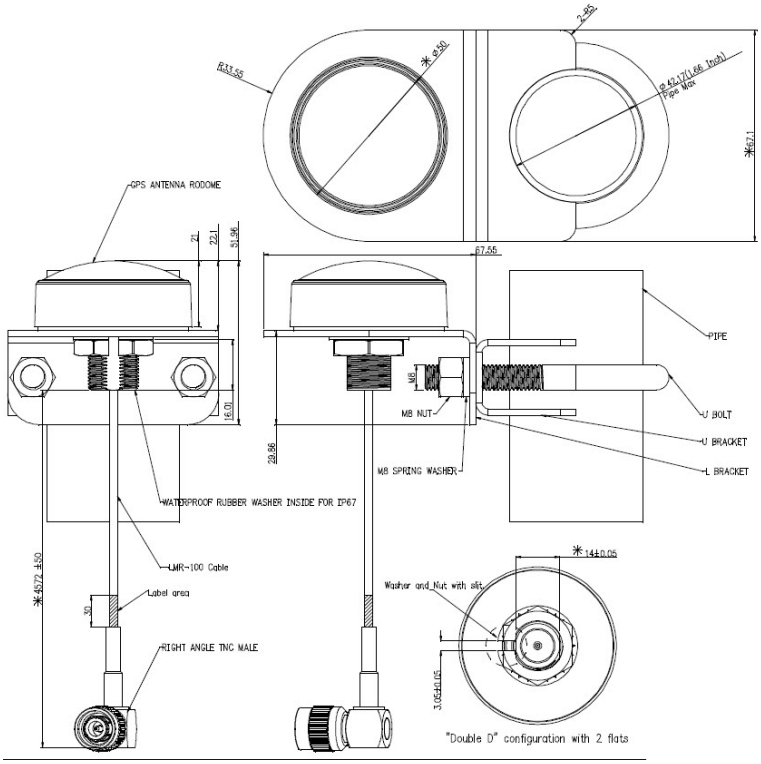

Note All Dimensions are in millimeters (mm).

TOLERANCE OF LINEAR DIMENSIONS FINE ISO 2768-f	
Dimension(mm)	Tolerance
0.5 – 6	±0.05
6 – 30	±0.10
30 – 120	±0.15
120 – 400	±0.2
TOLERANCE OF ANGULAR DIMENSIONS FINE ISO 2768-f	
Dimension of shorter side (millimeter)	Tolerance
up to 10	±1°
10 – 50	±0.30°
TOLERANCE OF RADII AND CHAMFERS FINE ISO 2768-f	
Radii, chamfer height	Tolerance
0.5 – 3	±0.2
3 – 6	±0.5
over 6	±1

General Safety Precautions

Warning This warning symbol means danger. You are in a situation that could cause bodily injury. Before you work on any equipment, be aware of the hazards involved with electrical circuitry and be familiar with standard practices for preventing accidents. Use the statement number provided at the end of each warning to locate its translation in the translated safety warnings that accompanied this device. **Statement 1071**

Warning Do not work on the system or connect or disconnect cables during periods of lightning activity. **Statement 1001**

Warning Do not locate the outdoor antenna near overhead power lines or other electric light or power circuits, or where it can come into contact with such circuits. When installing the antenna, take extreme care not to come into contact with such circuits, as they may cause serious injury or death. For proper installation and grounding of the antenna, please refer to national and local codes (for example, U.S.:NFPA 70, National Electrical Code, Article 810, Canada:Canadian Electrical Code, Section 54). **Statement 1052**

Warning In order to comply with FCC radio frequency (RF) exposure limits, antennas should be located at a minimum of 7.9 inches (20 cm) or more from the body of all persons. **Statement 332**

Note For your safety, and to help you achieve a good installation, please read and follow these safety precautions.

Mast Mounted or Building Mounted Installations

The following instructions are common to most mast mounted or building mounted installations. For specific installation instructions for each antenna, see the antenna data-sheet and the router hardware installation guide.

- Find someone to help you—installing an antenna is often a two-person job.
- Select your installation site with safety, as well as performance, in mind. Remember that electric power lines and phone lines look alike. For your safety, assume that any overhead line can kill you.
- Contact your electric power company. Tell them your plans and ask them to come look at your proposed installation.
- Do not use a metal ladder.
- Do not work on a wet or windy day.
- Do dress properly—wear shoes with rubber soles and heels, rubber gloves, and a long-sleeved shirt or jacket.
- If the assembly starts to drop, move away from it and let it fall. Because the antenna, mast, cable, and metal guy wires are all excellent conductors of electrical current, even the slightest touch of any of these parts to a power line completes an electrical path through the antenna and the installer.
- If any part of the antenna system should come in contact with a power line, do not touch it or try to remove it yourself. Call your local power company to have it removed safely.
- If an accident should occur with the power lines, call for qualified emergency help immediately.
- Assemble your new antenna on the ground or a level surface at the installation site.
- Connect its coaxial cable while you are on the ground and attach the antenna to the mast.
- Ensure that the mast does not fall as you raise or remove it. Use a durable non-conductive rope secured at each two foot level as the mast is raised. Have an assistant tend the rope, ready to pull the mast clear of any hazards (such as power lines) should it begin to fall.
- Use the mounting bracket provided with the antenna.

- If the installation will use guy wires:
  - Install guy anchor bolts.
  - Estimate the length of guy wire and cut it before raising the mast.
  - Attach guy wires to a mast using guy rings.
  - In the case of a guyed (tall, thin mast) installation, you must have at least one assistant to hold the mast upright while the guy wires are attached and tightened to the anchor bolts.
- Attach a “DANGER” label at eye level on the mast.
- Install ground rods to remove any static electricity buildup and connect a ground wire to the mast and ground rod. Use ground rods designed for that purpose, not a spare piece of pipe.

Unused Antenna Ports

Port plugs must be installed in any unused antenna ports.

The weatherproof caps on the connectors protect the router interior from environmental elements including water, heat, cold, and dust. They are installed on unused ports before the router is shipped.

When you install a new antenna in a port with an N-connector:

- Chassis-mounted antennas—Remove the weather proof cap before installing a chassis-mounted antenna.
- External antennas—Remove weatherproof cap, then connect the supported Cisco cable to the connector.

Guidelines to Achieving Optimal RF and Antenna Performance

Antennas are a critical component of a wireless communication system. Selecting a suitable antenna, an optimal antenna location, or antenna site is essential for optimum performance of a wireless links.

This section covers general tips for optimizing RF performance of indoor and outdoor terrestrial radio systems in the 400-7125 MHz frequency range. Examples of terrestrial radio systems include 4G LTE, 5G NR, Wi-Fi, LoRa, LR-WPAN and similar. In this context GPS SPS would not be considered a terrestrial system as the signal is received from space, not from another terrestrial site.

Because the antenna transmits and receives radio signals over the air, overall RF performance of the link is susceptible to RF obstructions and common sources of RF interference that can reduce throughput and range of the system.

Follow these guidelines to optimize performance. When in doubt, consult a qualified RF professional, and check with your solution partner for specific recommendations.

Antenna Model Selection and Performance

Consider the following when planning your installation:

- When selecting the antenna, ensure that it covers the frequency ranges or frequency bands of interest, and that it has good RF parameters such as antenna efficiency, VSWR and suitable radiation pattern for every frequency range that your application will use with this antenna.

- Antenna pattern is important. Omni-directional antennas have lower gain, but allow communicating to devices in all azimuth directions. Directional antennas concentrate the beam in a specific direction, making them ideal for point to point communication.
- When a system has multiple RF ports for receive and / or transmit, as is the case for 4G LTE , 5G NR or Wi-Fi, it is highly recommended to populate all the RF ports with suitable antennas to take advantage of MIMO, rather than rely on a single port or single antenna to save on cost. Please see the MIMO section for a detailed description of MIMO benefits.
- For RF systems that support multiple RF ports and multiple RF standards such as LTE, Wi-Fi, and GPS: consider using a multi-element antenna that integrates multiple antennas under the same radome (cover). Doing so may reduce cost compared to deploying and mounting a discrete single port antenna for every RF port.
- For communication between fixed infrastructure devices, such as mesh nodes or a point-to-point backhaul link, each device should have an antenna with the same polarization. If communicating with mobile devices that might be randomly oriented, consider dual-polarized antennas, such as those with both vertical and horizontal or slant +45° and -45° polarized elements.

Antenna Environmental Specifications

The selected antenna must have suitable mechanical and environmental specifications for the environment where it will be deployed. For example, shock and vibration specifications for transportation, corrosion resistant construction for marine and oil and gas industries, or IP (ingress protection) rating for outdoor deployment. Indoor antennas are typically not suitable for harsh industrial environments. Please check with your system integrator for environmental requirements for your application.

Antenna Accessories and Mounting

Consider the following when planning your installation:

- Carefully consider what type of other RF accessories, besides antenna, such as RF cables, lightning arrestors or RF adapters may be required in your installations. It is best to minimize long RF cable runs due to RF signal losses in the cable. Thinner RF cables have more RF loss , thicker cables are less flexible and more expensive.
- Carefully consider how the antenna will be physically mounted, as this may affect antenna selection. For example, a stud mount mechanical mounting design is a better fit for mounting on top of an electrical cabinet than a mast mount antenna.
- For outdoor deployments, follow installation instructions for the antenna. It is good practice to keep protective covers on the radio’s RF ports and any antenna or accessory RF ports until the moment the interfaces are mated. This reduces chances of contamination, trapping water or condensation inside the connector, or accidental damage to RF interfaces.

MIMO Performance and Arrays

MIMO systems deliver benefits of higher SNR, higher reliability and higher throughput compared to single antenna systems. In more technical terms, MIMO delivers array gain, diversity gain and multiplexing gain compared to single antenna.

- Array gain — Improvement in SNR (signal to noise ratio) by coherently combining signals from multiple antennas. For example, increasing SNR through beamforming techniques.

- Diversity gain — Improvement in reliability by mitigating deep fading or strong destructive EM wave interference. For example, in a two-antenna system, if one antenna is experiencing deep fading due to an EM destructive null at its location at a given instant, the other antenna is unlikely to have a null at the same instant, and the combined SNR stays at a reliable level. In contrast, a single antenna would see SNR oscillating between good SNR and very poor SNR and reliability would degrade.
- Multiplexing gain — Increase in system capacity or throughput by sending independent data over multiple spatial streams simultaneously. The number of streams cannot be more than the number of antennas. For example, to support three spatial streams, a minimum of three antennas is required. Often there may be additional antennas for diversity or redundancy, such as in the case of 4x4:3, or 4x4 MIMO with 3 spatial streams.

If deploying multiple single-element antennas for a MIMO system in an array, ensure sufficient spacing between the antennas. Omnidirectional elements should generally be at least one wavelength apart at the lowest operating frequency.

Consider the following:

- For Wi-Fi systems operating in the 2.4, 5, and/or 6 GHz bands, space elements at least 5 inches (12.5 cm) apart.
- For 4G LTE and 5G systems with the lowest operating frequency of 617 MHz , space elements at least 20 inches (50 cm) apart.
- Note that spacing between elements inside multi-element MIMO antennas is often less than one wavelength. However multi-element antennas are engineered with MIMO performance in mind, by providing antenna diversity through pattern, polarization, and isolation between MIMO elements.

Antenna siting and location

Consider the following when planning your installation:

- Plan antenna location ahead of time. Ideal location for an antenna is in LOS (line of sight) of the counterpart that it is trying to communicate with. Under LOS conditions the signals propagate directly between the two communication nodes, without relying on signal bouncing off a wall or other structure to reach the counterpart. This is sometimes not possible to achieve in practice, but it is a useful goal to keep in mind when optimizing antenna location.
- While it is good to keep RF cables short, it is most desirable for an antenna to be in the best location it can be to provide the desired coverage.
- For large deployments involving multiple units communicating with each other across a complex urban or industrial landscape, consider running an RF propagation modeling study to predict approximate simulated coverage maps and determine initial placement of the units. A propagation study may help reduce overall deployment cost by discovering and mitigating issues with RF coverage before the infrastructure is physically installed.
- Keep the antenna away from metal obstructions such as heating and air-conditioning ducts, large ceiling trusses, building superstructures, and major power cabling runs. One exception is if the antenna is designed to be mounted on a ground plane. If mounting on a ground plane, mount the antenna on a flat metal surface away from adjacent obstructions.
- It is strongly recommended not to install antennas directly on the router or access point (AP), unless the router or AP is specifically engineered to directly mount the antennas. Products that are engineered for direct mounting of antennas specifically address each of the below issues.

- Reasons to mount antennas away from the router include:
  - Router location may not be optimal location for antenna to communicate with the counterpart wirelessly, so router and antenna may need to be in different locations.
  - Router may have a clutter of Ethernet cable and power cables around it, which will obstruct antenna signal.
  - A number of routers, such as the IR1835, are modular. They have plug-in RF modules for Wi-Fi , 4G LTE or 5G NR such as WP-WIFI6, P-LTEAP18-GL, P-5GS6-GL. These modules have RF connectors spaced close together, and while it is mechanically possible to install four or five antennas directly attached, this will result in significant degradation to RF performance of antennas due to mutual de-tuning between closely spaced antennas. It is strongly recommended to install antennas away from the chassis in modular cases.
- If installing an antenna indoors, consider that the density and electromagnetic properties of the materials used in the building construction determines the number of walls the signal can pass through and still maintain adequate coverage.
  - Paper and vinyl walls have very little effect on signal penetration.
  - Solid and pre-cast concrete walls limit signal penetration to one or two walls without degrading coverage.
  - Concrete and wood block walls limit signal penetration to three or four walls.
  - A signal can penetrate five or six walls constructed of drywall or wood.
  - A thick metal wall causes signals to reflect off, causing poor penetration.
  - A chain link fence or wire mesh spaced between 1 and 1 1/2 in. (2.5 and 3.8 cm) acts as a harmonic reflector that blocks a 2.4-GHz radio signal.
  - Install the antenna away from microwave ovens and 2-GHz cordless phones. These products can cause signal interference because they operate in the same frequency range as the device your antenna is connected to.

Antenna Installation

Follow these steps to install the GPS antenna onto the router:

Note These installation steps are for the CGR1120 router.

Step 1 Mount the antenna in its proper location by using the provided antenna bracket.

Figure 285: Antenna Detail

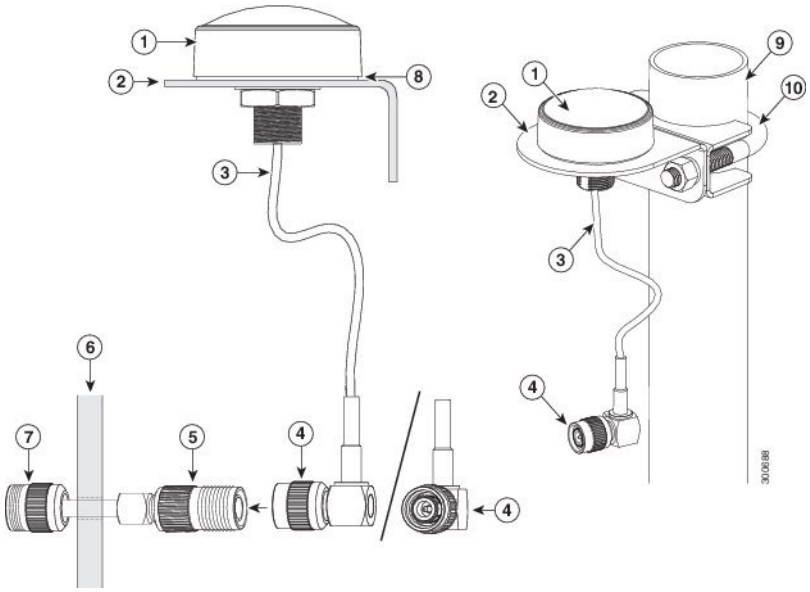

1	GPS antenna
2	Mounting L-bracket
3	LMR-100 cable
4	Right-angle TNC (m) connector
5	Adapter, TNC connector (f)
6	Building entry panel
7	Adapter, N-connector (f) to router
8	VHT adhesive tape
9	2” (outside dimension) pipe/mast
10	U-bolt

Step 2 Route and connect the LMR-100 cable to the TNC-to-N-connector adapter installed at the building entry panel.

Step 3 At the inside of the entry panel, install the LMR-100 cable to the N-connector on the adapter.

Step 4 Route the cable to the router and attach to the antenna connector.

Communications, Services, and Additional Information

- To receive timely, relevant information from Cisco, sign up at Cisco Profile Manager.
- To get the business impact you’re looking for with the technologies that matter, visit Cisco Services.

- To submit a service request, visit Cisco Support.
- To discover and browse secure, validated enterprise-class apps, products, solutions, and services, visit Cisco DevNet.
- To obtain general networking, training, and certification titles, visit Cisco Press.
- To find warranty information for a specific product or product family, access Cisco Warranty Finder.

Cisco Bug Search Tool

Cisco Bug Search Tool (BST) is a web-based tool that acts as a gateway to the Cisco bug tracking system that maintains a comprehensive list of defects and vulnerabilities in Cisco products and software. BST provides you with detailed defect information about your products and software.

Documentation Feedback

To provide feedback about Cisco technical documentation, use the feedback form available in the right pane of every online document.

Cisco Support Community

Cisco Support Community is a forum for you to ask and answer questions, share suggestions, and collaborate with your peers. Join the forum at https://supportforums.cisco.com/index.jspa.

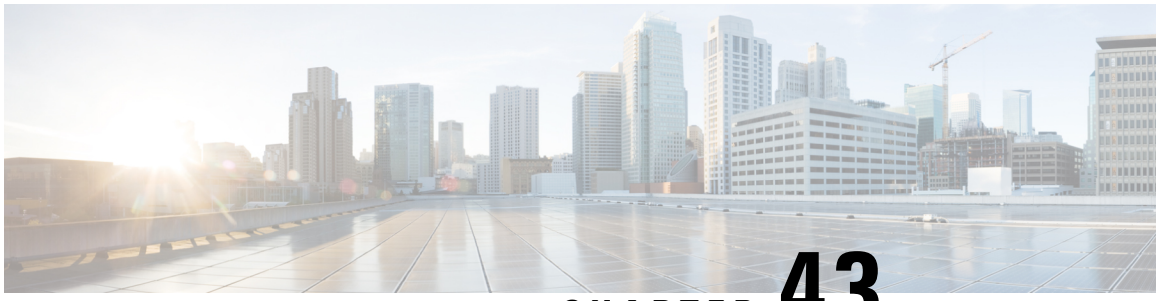

CHAPTER 43

Cisco Outdoor 5 dBI Omni Antenna for 863-928 MHz WPAN, LoRaWan, and ISM (ANT-LPWA-DB-O-N-5)

This chapter contains the following:

- Overview, on page 721
- Technical Specifications, on page 721
- Antenna Radiation Patterns, on page 725
- General Safety Precautions, on page 727
- Guidelines to Achieving Optimal RF and Antenna Performance, on page 728
- Antenna Installation, on page 732
- Communications, Services, and Additional Information, on page 734

Overview

This document describes the 5 dBI Outdoor Omni-directional Antenna for the Cisco WPAN, LoRaWan, ISM modules and routers operating in frequency ranges between 863-928 MHz, such as 863-876 MHz ETSI, or 902-928 MHz ISM bands. In addition, this document provides the antenna specifications and mounting instructions for the antenna.

Technical Specifications

The Outdoor Omni-directional Antenna features the following:

- UV-resistant fiberglass radome
- Heavy duty mounting bracket
- Gold anodized sleeve and top cap with N (female) connector
- DC-grounded for ESD protection

Note Antenna data sheets often claim lightning protection, while in reality only providing a DC ground path for ESD protection. Cisco recommends use of a lightning arrestor for all antennas potentially exposed to lightning strikes

Figure 286: Outdoor Omni-directional Antenna



Specifications

The following table provides RF and Mechanical Specification.

Specification	Description	
Frequency Bands	**863-876 MHz**	**902-928 MHz**
Peak Gain (dBi) Typical	5.2 dBi	5.4 dBi
Peak Gain (dBi) Max	5.3 dBi	5.6 dBi
Efficiency	74%-81%	75%-83%
VSWR (Avg)	1.5:1	1.5:1
VSWR (Max)	1.65:1	1.65:1
Azimuth 3 dB Beam width	360°	360°

Specification	Description	
Elevation 3 dB Beam width	28°-30°	27°-29°
Azimuth Ripple (Max), dB	0.6	0.8
Nominal Impedance	50 Ohms	
Polarization	Vertical	
Anti-Static Protection	DC Grounded	
Max Power (Ambient 25°C)	10 Watts	
Antenna Dimension (H x Diameter)	692 x 33.3 mm (27.2” x 1.3”)	
Connector	Type N Female	
Antenna Type	Dipole	
Weight	0.79 kg (1.7 lbs)	
Antenna Color	White	
Radome	Fiberglass	
Wind Operational	161 km/h (100 mph)	
Wind Survival	266 km/h (165 mph)	
Operating Temperature	-40°C to +70°C (-40°F to +158°F)	
Storage Temperature	-40°C to +85°C (-40°F to +185°F)	
Ingression Protection	IP67	
Material Substance Compliance	RoHS	
Environmental Testing	Antenna passed extensive environmental and mechanical tests appropriate for mast mount applications.	

Note Antenna must be mounted vertically to obtain omni-directional coverage horizontally. Please see antenna radiation pattern.

Dimensions

The following graphic shows the Antenna Dimensions.

Figure 287: Dimensions

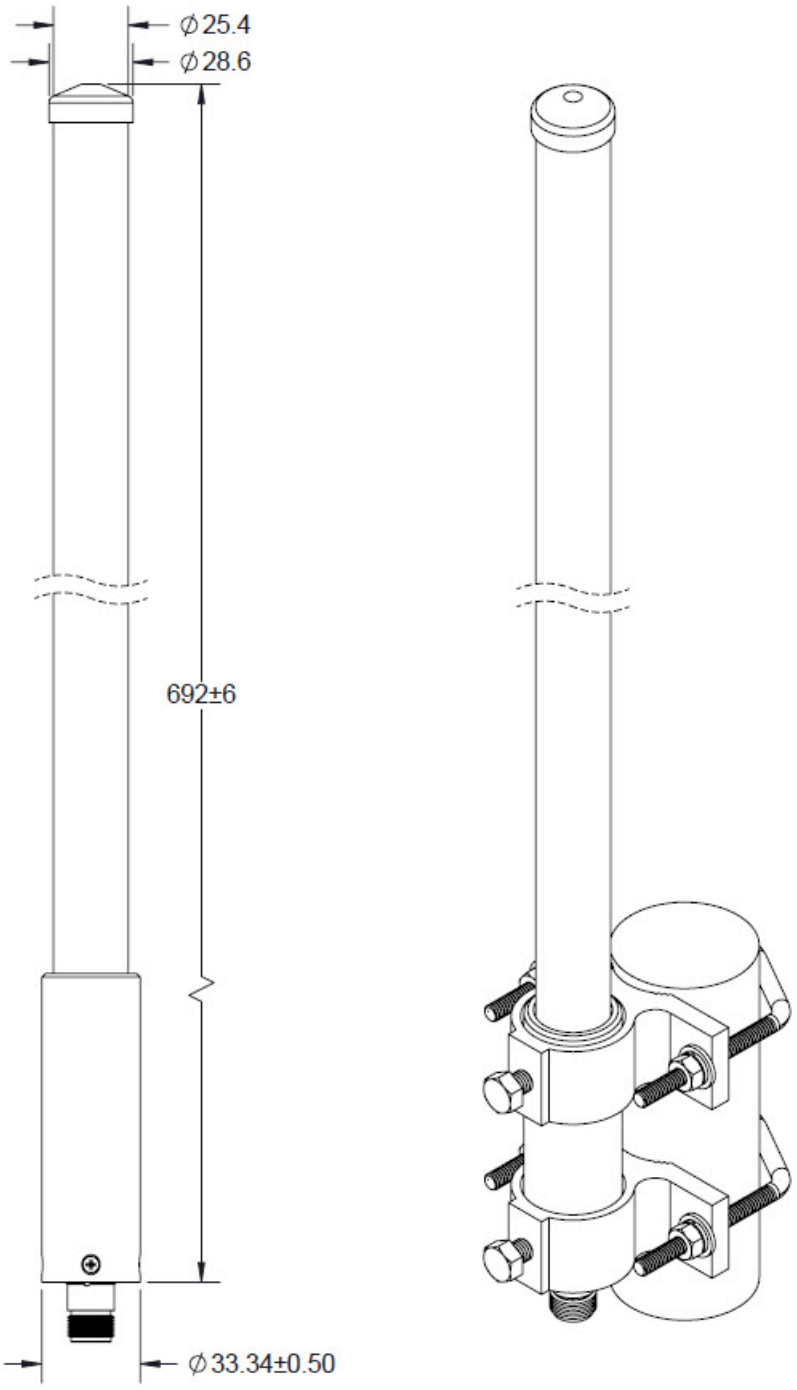

Note Antenna dimensions are shown in Millimeters.

Antenna Radiation Patterns

The following sequence of illustrations show the different antenna radiation patterns. The azimuth radiation plane is shown on the left, and elevation plane pattern is shown on the right.

Figure 288: 863 MHz Radiation Pattern

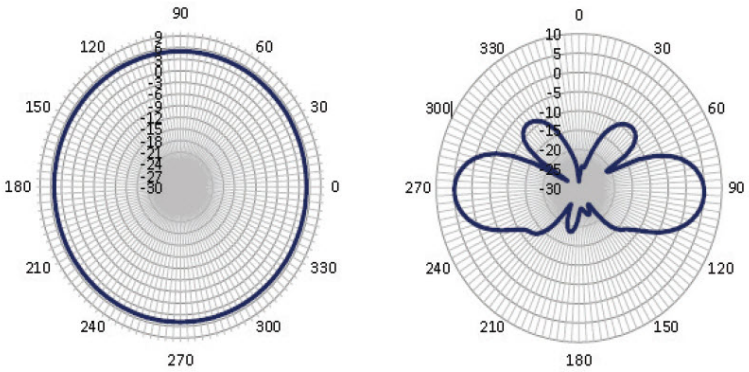

Figure 289: 869 MHz Radiation Pattern

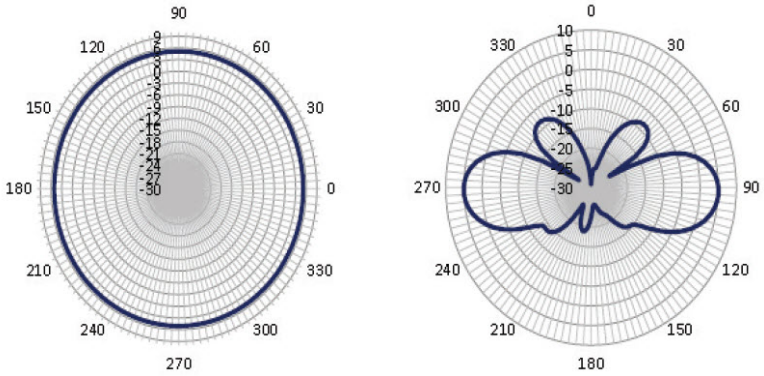

Figure 290: 876 MHz Radiation Pattern

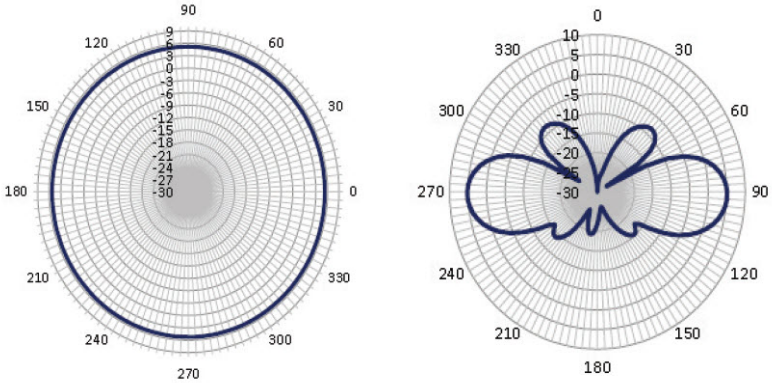

Figure 291: 902 MHz Radiation Pattern

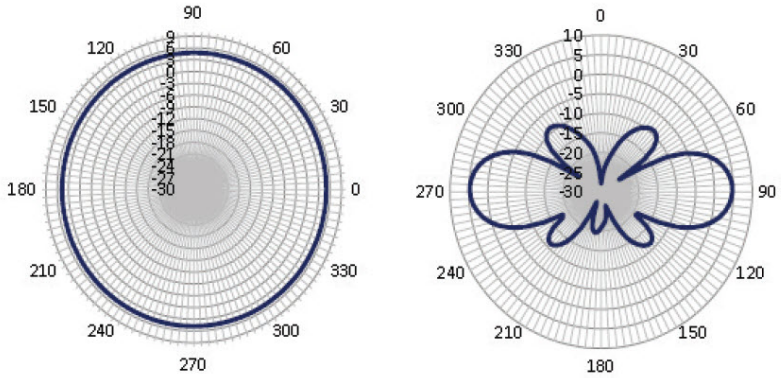

Figure 292: 914 MHz Radiation Pattern

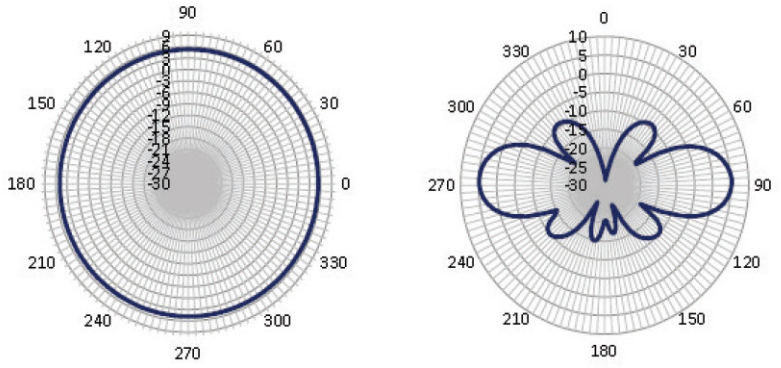

Figure 293: 928 MHz Radiation Pattern

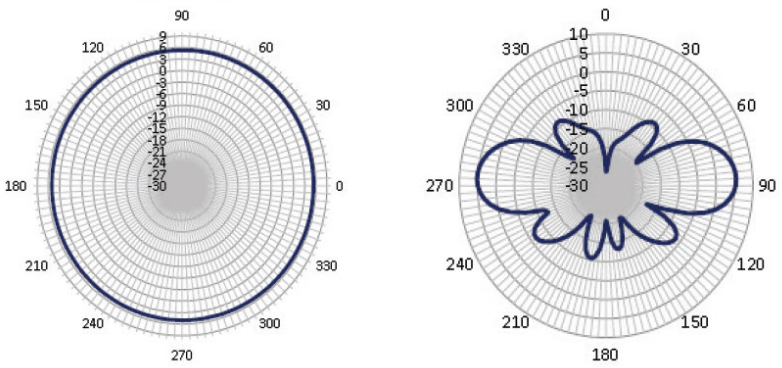

General Safety Precautions

Warning This warning symbol means danger. You are in a situation that could cause bodily injury. Before you work on any equipment, be aware of the hazards involved with electrical circuitry and be familiar with standard practices for preventing accidents. Use the statement number provided at the end of each warning to locate its translation in the translated safety warnings that accompanied this device. **Statement 1071**

Warning Do not work on the system or connect or disconnect cables during periods of lightning activity. **Statement 1001**

Warning Do not locate the outdoor antenna near overhead power lines or other electric light or power circuits, or where it can come into contact with such circuits. When installing the antenna, take extreme care not to come into contact with such circuits, as they may cause serious injury or death. For proper installation and grounding of the antenna, please refer to national and local codes (for example, U.S.:NFPA 70, National Electrical Code, Article 810, Canada:Canadian Electrical Code, Section 54). **Statement 1052**

Warning In order to comply with FCC radio frequency (RF) exposure limits, antennas should be located at a minimum of 7.9 inches (20 cm) or more from the body of all persons. **Statement 332**

Note For your safety, and to help you achieve a good installation, please read and follow these safety precautions.

Mast Mounted or Building Mounted Installations

The following instructions are common to most mast mounted or building mounted installations. For specific installation instructions for each antenna, see the antenna data-sheet and the router hardware installation guide.

- Find someone to help you—installing an antenna is often a two-person job.
- Select your installation site with safety, as well as performance, in mind. Remember that electric power lines and phone lines look alike. For your safety, assume that any overhead line can kill you.
- Contact your electric power company. Tell them your plans and ask them to come look at your proposed installation.
- Do not use a metal ladder.
- Do not work on a wet or windy day.
- Do dress properly—wear shoes with rubber soles and heels, rubber gloves, and a long-sleeved shirt or jacket.

- If the assembly starts to drop, move away from it and let it fall. Because the antenna, mast, cable, and metal guy wires are all excellent conductors of electrical current, even the slightest touch of any of these parts to a power line completes an electrical path through the antenna and the installer.
- If any part of the antenna system should come in contact with a power line, do not touch it or try to remove it yourself. Call your local power company to have it removed safely.
- If an accident should occur with the power lines, call for qualified emergency help immediately.
- Assemble your new antenna on the ground or a level surface at the installation site.
- Connect its coaxial cable while you are on the ground and attach the antenna to the mast.
- Ensure that the mast does not fall as you raise or remove it. Use a durable non-conductive rope secured at each two foot level as the mast is raised. Have an assistant tend the rope, ready to pull the mast clear of any hazards (such as power lines) should it begin to fall.
- Use the mounting bracket provided with the antenna.
- If the installation will use guy wires:
  - Install guy anchor bolts.
  - Estimate the length of guy wire and cut it before raising the mast.
  - Attach guy wires to a mast using guy rings.
  - In the case of a guyed (tall, thin mast) installation, you must have at least one assistant to hold the mast upright while the guy wires are attached and tightened to the anchor bolts.
- Attach a “DANGER” label at eye level on the mast.
- Install ground rods to remove any static electricity buildup and connect a ground wire to the mast and ground rod. Use ground rods designed for that purpose, not a spare piece of pipe.

Unused Antenna Ports

Port plugs must be installed in any unused antenna ports.

The weatherproof caps on the connectors protect the router interior from environmental elements including water, heat, cold, and dust. They are installed on unused ports before the router is shipped.

When you install a new antenna in a port with an N-connector:

- Chassis-mounted antennas—Remove the weather proof cap before installing a chassis-mounted antenna.
- External antennas—Remove weatherproof cap, then connect the supported Cisco cable to the connector.

Guidelines to Achieving Optimal RF and Antenna Performance

Antennas are a critical component of a wireless communication system. Selecting a suitable antenna, an optimal antenna location, or antenna site is essential for optimum performance of a wireless links.

This section covers general tips for optimizing RF performance of indoor and outdoor terrestrial radio systems in the 400-7125 MHz frequency range. Examples of terrestrial radio systems include 4G LTE, 5G NR, Wi-Fi,

LoRa, LR-WPAN and similar. In this context GPS SPS would not be considered a terrestrial system as the signal is received from space, not from another terrestrial site.

Because the antenna transmits and receives radio signals over the air, overall RF performance of the link is susceptible to RF obstructions and common sources of RF interference that can reduce throughput and range of the system.

Follow these guidelines to optimize performance. When in doubt, consult a qualified RF professional, and check with your solution partner for specific recommendations.

Antenna Model Selection and Performance

Consider the following when planning your installation:

- When selecting the antenna, ensure that it covers the frequency ranges or frequency bands of interest, and that it has good RF parameters such as antenna efficiency, VSWR and suitable radiation pattern for every frequency range that your application will use with this antenna.
- Antenna pattern is important. Omni-directional antennas have lower gain, but allow communicating to devices in all azimuth directions. Directional antennas concentrate the beam in a specific direction, making them ideal for point to point communication.
- When a system has multiple RF ports for receive and / or transmit, as is the case for 4G LTE , 5G NR or Wi-Fi, it is highly recommended to populate all the RF ports with suitable antennas to take advantage of MIMO, rather than rely on a single port or single antenna to save on cost. Please see the MIMO section for a detailed description of MIMO benefits.
- For RF systems that support multiple RF ports and multiple RF standards such as LTE, Wi-Fi, and GPS: consider using a multi-element antenna that integrates multiple antennas under the same radome (cover). Doing so may reduce cost compared to deploying and mounting a discrete single port antenna for every RF port.
- For communication between fixed infrastructure devices, such as mesh nodes or a point-to-point backhaul link, each device should have an antenna with the same polarization. If communicating with mobile devices that might be randomly oriented, consider dual-polarized antennas, such as those with both vertical and horizontal or slant +45° and -45° polarized elements.

Antenna Environmental Specifications

The selected antenna must have suitable mechanical and environmental specifications for the environment where it will be deployed. For example, shock and vibration specifications for transportation, corrosion resistant construction for marine and oil and gas industries, or IP (ingress protection) rating for outdoor deployment. Indoor antennas are typically not suitable for harsh industrial environments. Please check with your system integrator for environmental requirements for your application.

Antenna Accessories and Mounting

Consider the following when planning your installation:

- Carefully consider what type of other RF accessories, besides antenna, such as RF cables, lightning arrestors or RF adapters may be required in your installations. It is best to minimize long RF cable runs due to RF signal losses in the cable. Thinner RF cables have more RF loss , thicker cables are less flexible and more expensive.

- Carefully consider how the antenna will be physically mounted, as this may affect antenna selection. For example, a stud mount mechanical mounting design is a better fit for mounting on top of an electrical cabinet than a mast mount antenna.
- For outdoor deployments, follow installation instructions for the antenna. It is good practice to keep protective covers on the radio's RF ports and any antenna or accessory RF ports until the moment the interfaces are mated. This reduces chances of contamination, trapping water or condensation inside the connector, or accidental damage to RF interfaces.

MIMO Performance and Arrays

MIMO systems deliver benefits of higher SNR, higher reliability and higher throughput compared to single antenna systems. In more technical terms, MIMO delivers array gain, diversity gain and multiplexing gain compared to single antenna.

- Array gain — Improvement in SNR (signal to noise ratio) by coherently combining signals from multiple antennas. For example, increasing SNR through beamforming techniques.
- Diversity gain — Improvement in reliability by mitigating deep fading or strong destructive EM wave interference. For example, in a two-antenna system, if one antenna is experiencing deep fading due to an EM destructive null at its location at a given instant, the other antenna is unlikely to have a null at the same instant, and the combined SNR stays at a reliable level. In contrast, a single antenna would see SNR oscillating between good SNR and very poor SNR and reliability would degrade.
- Multiplexing gain — Increase in system capacity or throughput by sending independent data over multiple spatial streams simultaneously. The number of streams cannot be more than the number of antennas. For example, to support three spatial streams, a minimum of three antennas is required. Often there may be additional antennas for diversity or redundancy, such as in the case of 4x4:3, or 4x4 MIMO with 3 spatial streams.

If deploying multiple single-element antennas for a MIMO system in an array, ensure sufficient spacing between the antennas. Omnidirectional elements should generally be at least one wavelength apart at the lowest operating frequency.

Consider the following:

- For Wi-Fi systems operating in the 2.4, 5, and/or 6 GHz bands, space elements at least 5 inches (12.5 cm) apart.
- For 4G LTE and 5G systems with the lowest operating frequency of 617 MHz , space elements at least 20 inches (50 cm) apart.
- Note that spacing between elements inside multi-element MIMO antennas is often less than one wavelength. However multi-element antennas are engineered with MIMO performance in mind, by providing antenna diversity through pattern, polarization, and isolation between MIMO elements.

Antenna siting and location

Consider the following when planning your installation:

- Plan antenna location ahead of time. Ideal location for an antenna is in LOS (line of sight) of the counterpart that it is trying to communicate with. Under LOS conditions the signals propagate directly between the two communication nodes, without relying on signal bouncing off a wall or other structure to reach the counterpart. This is sometimes not possible to achieve in practice, but it is a useful goal to keep in mind when optimizing antenna location.

- While it is good to keep RF cables short, it is most desirable for an antenna to be in the best location it can be to provide the desired coverage.
- For large deployments involving multiple units communicating with each other across a complex urban or industrial landscape, consider running an RF propagation modeling study to predict approximate simulated coverage maps and determine initial placement of the units. A propagation study may help reduce overall deployment cost by discovering and mitigating issues with RF coverage before the infrastructure is physically installed.
- Keep the antenna away from metal obstructions such as heating and air-conditioning ducts, large ceiling trusses, building superstructures, and major power cabling runs. One exception is if the antenna is designed to be mounted on a ground plane. If mounting on a ground plane, mount the antenna on a flat metal surface away from adjacent obstructions.
- It is strongly recommended not to install antennas directly on the router or access point (AP), unless the router or AP is specifically engineered to directly mount the antennas. Products that are engineered for direct mounting of antennas specifically address each of the below issues.
- Reasons to mount antennas away from the router include:
    - Router location may not be optimal location for antenna to communicate with the counterpart wirelessly, so router and antenna may need to be in different locations.
    - Router may have a clutter of Ethernet cable and power cables around it, which will obstruct antenna signal.
    - A number of routers, such as the IR1835, are modular. They have plug-in RF modules for Wi-Fi , 4G LTE or 5G NR such as WP-WIFI6, P-LTEAP18-GL, P-5GS6-GL. These modules have RF connectors spaced close together, and while it is mechanically possible to install four or five antennas directly attached, this will result in significant degradation to RF performance of antennas due to mutual de-tuning between closely spaced antennas. It is strongly recommended to install antennas away from the chassis in modular cases.
- If installing an antenna indoors, consider that the density and electromagnetic properties of the materials used in the building construction determines the number of walls the signal can pass through and still maintain adequate coverage.
    - Paper and vinyl walls have very little effect on signal penetration.
    - Solid and pre-cast concrete walls limit signal penetration to one or two walls without degrading coverage.
    - Concrete and wood block walls limit signal penetration to three or four walls.
    - A signal can penetrate five or six walls constructed of drywall or wood.
    - A thick metal wall causes signals to reflect off, causing poor penetration.
    - A chain link fence or wire mesh spaced between 1 and 1 1/2 in. (2.5 and 3.8 cm) acts as a harmonic reflector that blocks a 2.4-GHz radio signal.
    - Install the antenna away from microwave ovens and 2-GHz cordless phones. These products can cause signal interference because they operate in the same frequency range as the device your antenna is connected to.

Antenna Installation

The antenna installation includes the following procedures:

Tools and Equipment Required

In addition to the parts included in the antenna kit, you must provide the following tools to install the antenna on the router:

- 1/2” & 7/16” open-end wrench

Note This list does not include the tools and equipment required to assemble and erect the tower, mast, or other structure you intend to mount your antenna on.

Mounting Components

The antenna can be mounted on a 1-1/2” to 2-1/2” (3.81 to 6.35 cm) pole, extension arm, or mast.

The antenna and mounting components are shown in the following figure.

Figure 294: Antenna Mounting Components

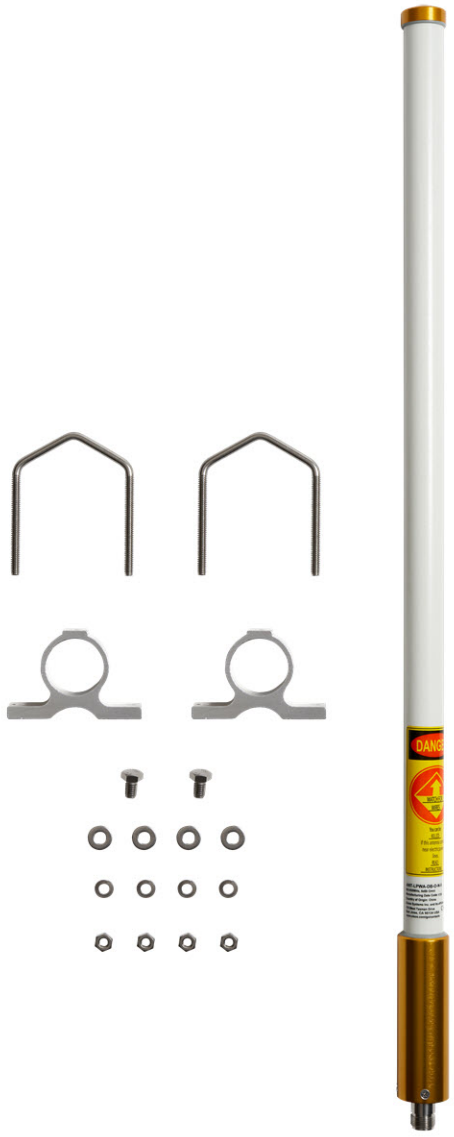

Item Number	Description	Quantity
1	External Bracket, AL,FOR FM2	2
2	V-Bolt Clamp,1/4-20,ST,NF Fits a 1-1/2” to 2-1/2” (3.81 to 6.35 cm) pole.	2
3	Flat Washer,1/4in,SS,PA	4
4	Split-lock Washer, 1/4	4
5	Hex Nut, [1/4-20], SS, PA	4
6	Hex Bolt,5/16-18x1/2,SS,NF	2

Communications, Services, and Additional Information

- To receive timely, relevant information from Cisco, sign up at Cisco Profile Manager.
- To get the business impact you’re looking for with the technologies that matter, visit Cisco Services.
- To submit a service request, visit Cisco Support.
- To discover and browse secure, validated enterprise-class apps, products, solutions, and services, visit Cisco DevNet.
- To obtain general networking, training, and certification titles, visit Cisco Press.
- To find warranty information for a specific product or product family, access Cisco Warranty Finder.

Cisco Bug Search Tool

Cisco Bug Search Tool (BST) is a web-based tool that acts as a gateway to the Cisco bug tracking system that maintains a comprehensive list of defects and vulnerabilities in Cisco products and software. BST provides you with detailed defect information about your products and software.

Documentation Feedback

To provide feedback about Cisco technical documentation, use the feedback form available in the right pane of every online document.

Cisco Support Community

Cisco Support Community is a forum for you to ask and answer questions, share suggestions, and collaborate with your peers. Join the forum at https://supportforums.cisco.com/index.jspa.

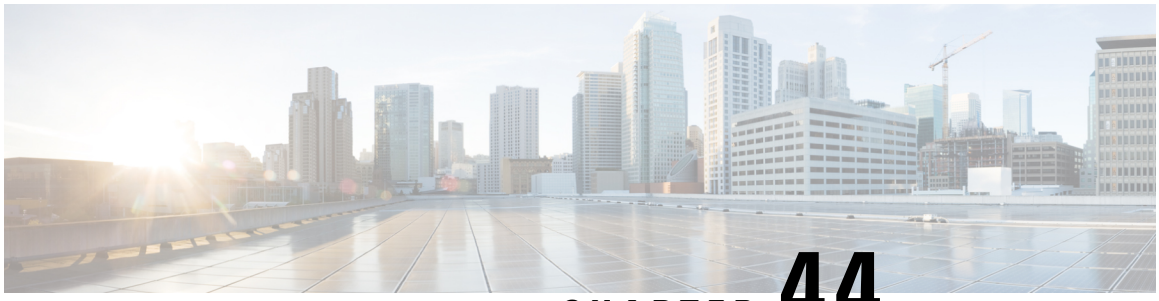

CHAPTER 44

Cisco Omnidirectional Dipole Antenna (ANT-LPWA-SMA-D)

This chapter contains the following sections:

- Overview, on page 735
- Specifications, on page 736
- Antenna Radiation Patterns, on page 738
- Installation Instructions, on page 740
- General Safety Precautions, on page 740
- Guidelines to Achieving Optimal RF and Antenna Performance, on page 742
- Communications, Services, and Additional Information, on page 745

Overview

This document provides the description, supported features, and installation instructions for the Cisco Omnidirectional Indoor Dipole Antenna (ANT-LPWA-SMA-D).

Caution Read the information in Safety Instructions before installing or replacing antennas.

The ANT-LPWA-SMA-D omnidirectional dipole antenna is designed for indoor use with Cisco Routers (ISRs) and Pluggable Modules with an SMA connector.

This antenna has the following features:

- Support for frequencies of 863-928 MHz
- Peak gain: 1 dBi
- Optimized for straight and 90 degree bent positions
- IP65
- Total length (straight) 7.47” (189.8mm)
- Width 0.94” (23.8mm)
- Color: black with silver stripes

- Male Sub-miniature A connector that allows direct mounting of the antenna to any Cisco supported router or Pluggable Module with an SMA female connector

Figure 295: Cisco ANT-LPWA-SMA-D Omnidirectional Indoor Dipole Antenna



Specifications

Table 70: Electrical Specifications of the ANT-LPWA-SMA-D antenna

Operating Frequency	863-928 MHz
Polarization	Vertical
Antenna Type	Dipole
Nominal Impedance	50 Ohms
Power Withstanding	20 W
DC ground	No
VSWR	2:1
Average Peak Gain	0.9 dBi
HPBW Vertical Plane	88°
Average Efficiency	80%

Table 71: Mechanical Specifications of the ANT-LPWA-SMA-D antenna

Dimensions (Width x Height)	0.94” (23.8mm) x 7.47” (189.8mm)
Weight	0.09 lbs (41grms)
Average Efficiency	80%

Temperature Range	-40°C to +85°C (Operating) -40°C to + 85°C (Storage)
Housing Material	PC/ABS, UV Protected
RoHS-6 Compliant	Yes

Figure 296: Mechanical Drawing

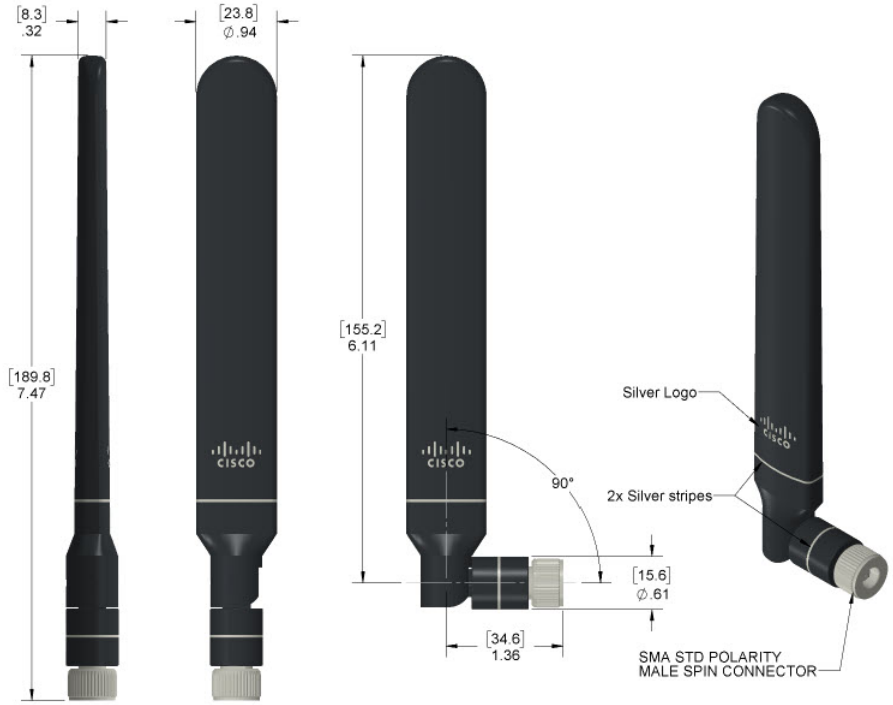

Dimensions: Inches (mm)
Unless otherwise specified, all tolerances are ±.020 (0.5mm)

Antenna Radiation Patterns

Figure 297: VSWR Vs Frequency

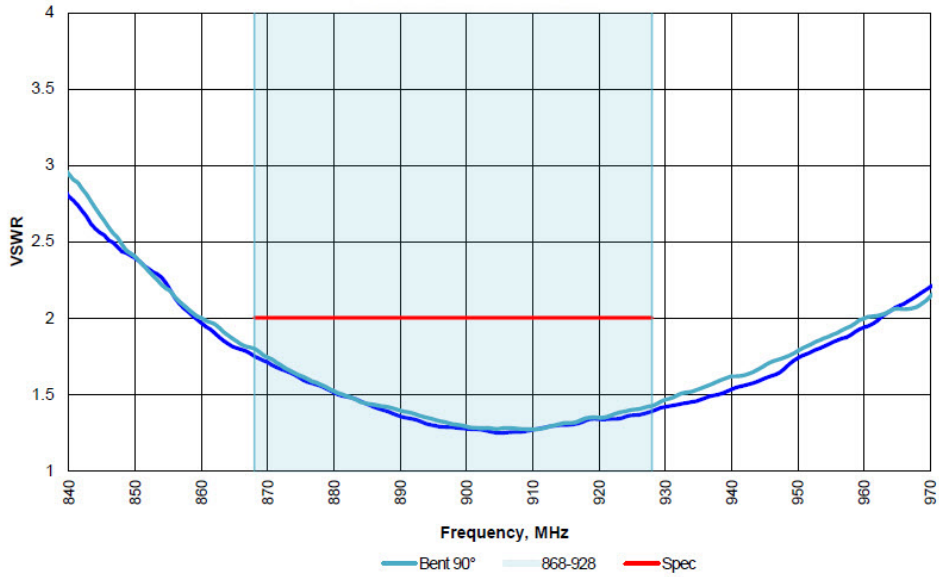

Figure 298: Efficiency Vs Frequency

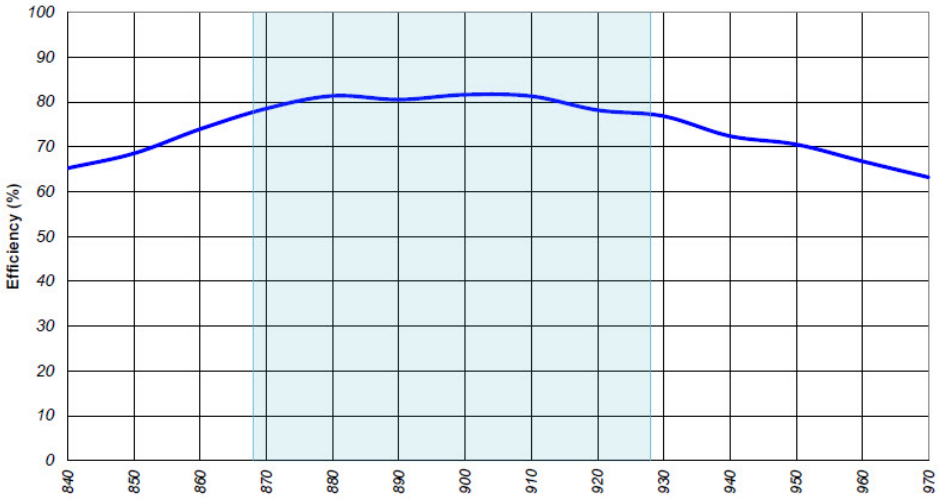

Figure 299: Peak Gain Vs Frequency

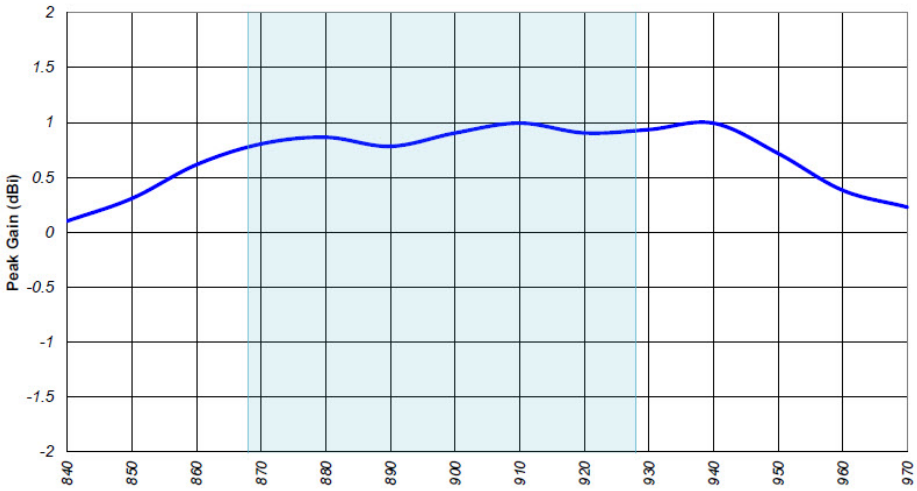

Figure 300: XY plane @ 870-930 MHz

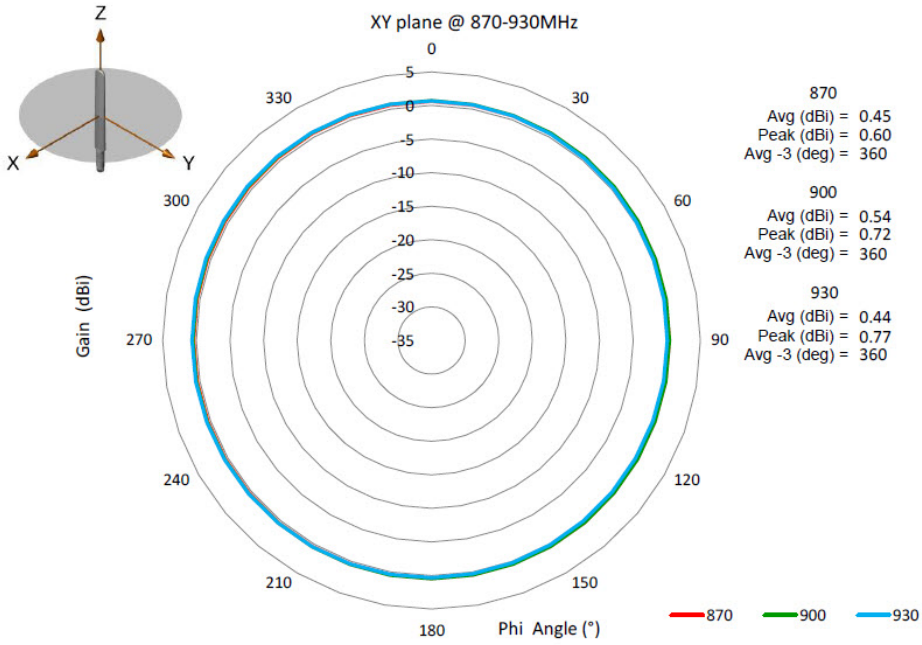

Figure 301: XZ plane @ 870-930 MHz

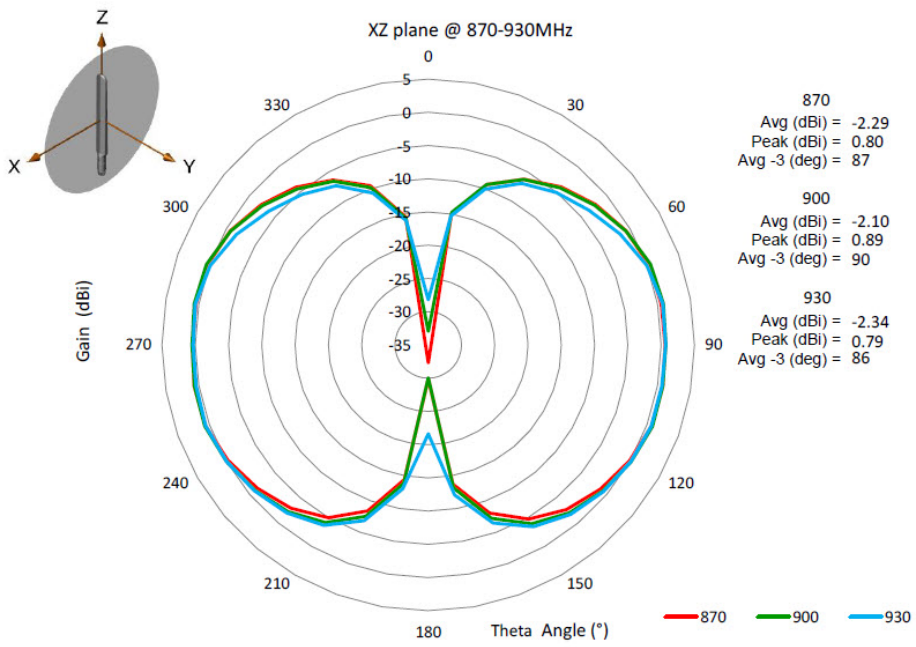

Installation Instructions

The following section contains information for installing the ANT-LPWA-SMA-D antenna:

This antenna is designed to be mounted either directly or on an antenna extension stand to any Cisco wireless router with an SMA(f) connector by threading it onto the mating connector. Refer to the routers technical documentation for recommendations of direct mounting of antenna to the router versus installing the antenna on an antenna extension stand. Mount and deploy the antenna at the 0° position, 45° position, or the 90° position, and then change that position at will. The rotation of the antenna into the proper position can take place while the antenna is still loose on the mating connector. No software is required for this installation.

In addition to the antenna orientation, the installation location of routers and cellular modules play a significant role in determining overall network performance. Routers located at the farthest coverage points might have reduced bandwidth available compared to routers located closer to the cellular base station tower.

General Safety Precautions

Warning This warning symbol means danger. You are in a situation that could cause bodily injury. Before you work on any equipment, be aware of the hazards involved with electrical circuitry and be familiar with standard practices for preventing accidents. Use the statement number provided at the end of each warning to locate its translation in the translated safety warnings that accompanied this device. **Statement 1071**

Warning Do not work on the system or connect or disconnect cables during periods of lightning activity. **Statement 1001**

Warning Do not locate the outdoor antenna near overhead power lines or other electric light or power circuits, or where it can come into contact with such circuits. When installing the antenna, take extreme care not to come into contact with such circuits, as they may cause serious injury or death. For proper installation and grounding of the antenna, please refer to national and local codes (for example, U.S.:NFPA 70, National Electrical Code, Article 810, Canada:Canadian Electrical Code, Section 54). **Statement 1052**

Warning In order to comply with FCC radio frequency (RF) exposure limits, antennas should be located at a minimum of 7.9 inches (20 cm) or more from the body of all persons. **Statement 332**

Note For your safety, and to help you achieve a good installation, please read and follow these safety precautions.

Mast Mounted or Building Mounted Installations

The following instructions are common to most mast mounted or building mounted installations. For specific installation instructions for each antenna, see the antenna data-sheet and the router hardware installation guide.

- Find someone to help you—installing an antenna is often a two-person job.
- Select your installation site with safety, as well as performance, in mind. Remember that electric power lines and phone lines look alike. For your safety, assume that any overhead line can kill you.
- Contact your electric power company. Tell them your plans and ask them to come look at your proposed installation.
- Do not use a metal ladder.
- Do not work on a wet or windy day.
- Do dress properly—wear shoes with rubber soles and heels, rubber gloves, and a long-sleeved shirt or jacket.
- If the assembly starts to drop, move away from it and let it fall. Because the antenna, mast, cable, and metal guy wires are all excellent conductors of electrical current, even the slightest touch of any of these parts to a power line completes an electrical path through the antenna and the installer.
- If any part of the antenna system should come in contact with a power line, do not touch it or try to remove it yourself. Call your local power company to have it removed safely.
- If an accident should occur with the power lines, call for qualified emergency help immediately.
- Assemble your new antenna on the ground or a level surface at the installation site.
- Connect its coaxial cable while you are on the ground and attach the antenna to the mast.

- Ensure that the mast does not fall as you raise or remove it. Use a durable non-conductive rope secured at each two foot level as the mast is raised. Have an assistant tend the rope, ready to pull the mast clear of any hazards (such as power lines) should it begin to fall.
- Use the mounting bracket provided with the antenna.
- If the installation will use guy wires:
  - Install guy anchor bolts.
  - Estimate the length of guy wire and cut it before raising the mast.
  - Attach guy wires to a mast using guy rings.
  - In the case of a guyed (tall, thin mast) installation, you must have at least one assistant to hold the mast upright while the guy wires are attached and tightened to the anchor bolts.
- Attach a “DANGER” label at eye level on the mast.
- Install ground rods to remove any static electricity buildup and connect a ground wire to the mast and ground rod. Use ground rods designed for that purpose, not a spare piece of pipe.

Unused Antenna Ports

Port plugs must be installed in any unused antenna ports.

The weatherproof caps on the connectors protect the router interior from environmental elements including water, heat, cold, and dust. They are installed on unused ports before the router is shipped.

When you install a new antenna in a port with an N-connector:

- Chassis-mounted antennas—Remove the weather proof cap before installing a chassis-mounted antenna.
- External antennas—Remove weatherproof cap, then connect the supported Cisco cable to the connector.

Guidelines to Achieving Optimal RF and Antenna Performance

Antennas are a critical component of a wireless communication system. Selecting a suitable antenna, an optimal antenna location, or antenna site is essential for optimum performance of a wireless links.

This section covers general tips for optimizing RF performance of indoor and outdoor terrestrial radio systems in the 400-7125 MHz frequency range. Examples of terrestrial radio systems include 4G LTE, 5G NR, Wi-Fi, LoRa, LR-WPAN and similar. In this context GPS SPS would not be considered a terrestrial system as the signal is received from space, not from another terrestrial site.

Because the antenna transmits and receives radio signals over the air, overall RF performance of the link is susceptible to RF obstructions and common sources of RF interference that can reduce throughput and range of the system.

Follow these guidelines to optimize performance. When in doubt, consult a qualified RF professional, and check with your solution partner for specific recommendations.

Antenna Model Selection and Performance

Consider the following when planning your installation:

- When selecting the antenna, ensure that it covers the frequency ranges or frequency bands of interest, and that it has good RF parameters such as antenna efficiency, VSWR and suitable radiation pattern for every frequency range that your application will use with this antenna.
- Antenna pattern is important. Omni-directional antennas have lower gain, but allow communicating to devices in all azimuth directions. Directional antennas concentrate the beam in a specific direction, making them ideal for point to point communication.
- When a system has multiple RF ports for receive and / or transmit, as is the case for 4G LTE , 5G NR or Wi-Fi, it is highly recommended to populate all the RF ports with suitable antennas to take advantage of MIMO, rather than rely on a single port or single antenna to save on cost. Please see the MIMO section for a detailed description of MIMO benefits.
- For RF systems that support multiple RF ports and multiple RF standards such as LTE, Wi-Fi, and GPS: consider using a multi-element antenna that integrates multiple antennas under the same radome (cover). Doing so may reduce cost compared to deploying and mounting a discrete single port antenna for every RF port.
- For communication between fixed infrastructure devices, such as mesh nodes or a point-to-point backhaul link, each device should have an antenna with the same polarization. If communicating with mobile devices that might be randomly oriented, consider dual-polarized antennas, such as those with both vertical and horizontal or slant +45° and -45° polarized elements.

Antenna Environmental Specifications

The selected antenna must have suitable mechanical and environmental specifications for the environment where it will be deployed. For example, shock and vibration specifications for transportation, corrosion resistant construction for marine and oil and gas industries, or IP (ingress protection) rating for outdoor deployment. Indoor antennas are typically not suitable for harsh industrial environments. Please check with your system integrator for environmental requirements for your application.

Antenna Accessories and Mounting

Consider the following when planning your installation:

- Carefully consider what type of other RF accessories, besides antenna, such as RF cables, lightning arrestors or RF adapters may be required in your installations. It is best to minimize long RF cable runs due to RF signal losses in the cable. Thinner RF cables have more RF loss , thicker cables are less flexible and more expensive.
- Carefully consider how the antenna will be physically mounted, as this may affect antenna selection. For example, a stud mount mechanical mounting design is a better fit for mounting on top of an electrical cabinet than a mast mount antenna.
- For outdoor deployments, follow installation instructions for the antenna. It is good practice to keep protective covers on the radio’s RF ports and any antenna or accessory RF ports until the moment the interfaces are mated. This reduces chances of contamination, trapping water or condensation inside the connector, or accidental damage to RF interfaces.

MIMO Performance and Arrays

MIMO systems deliver benefits of higher SNR, higher reliability and higher throughput compared to single antenna systems. In more technical terms, MIMO delivers array gain, diversity gain and multiplexing gain compared to single antenna.

- Array gain — Improvement in SNR (signal to noise ratio) by coherently combining signals from multiple antennas. For example, increasing SNR through beamforming techniques.
- Diversity gain — Improvement in reliability by mitigating deep fading or strong destructive EM wave interference. For example, in a two-antenna system, if one antenna is experiencing deep fading due to an EM destructive null at its location at a given instant, the other antenna is unlikely to have a null at the same instant, and the combined SNR stays at a reliable level. In contrast, a single antenna would see SNR oscillating between good SNR and very poor SNR and reliability would degrade.
- Multiplexing gain — Increase in system capacity or throughput by sending independent data over multiple spatial streams simultaneously. The number of streams cannot be more than the number of antennas. For example, to support three spatial streams, a minimum of three antennas is required. Often there may be additional antennas for diversity or redundancy, such as in the case of 4x4:3, or 4x4 MIMO with 3 spatial streams.

If deploying multiple single-element antennas for a MIMO system in an array, ensure sufficient spacing between the antennas. Omnidirectional elements should generally be at least one wavelength apart at the lowest operating frequency.

Consider the following:

- For Wi-Fi systems operating in the 2.4, 5, and/or 6 GHz bands, space elements at least 5 inches (12.5 cm) apart.
- For 4G LTE and 5G systems with the lowest operating frequency of 617 MHz , space elements at least 20 inches (50 cm) apart.
- Note that spacing between elements inside multi-element MIMO antennas is often less than one wavelength. However multi-element antennas are engineered with MIMO performance in mind, by providing antenna diversity through pattern, polarization, and isolation between MIMO elements.

Antenna siting and location

Consider the following when planning your installation:

- Plan antenna location ahead of time. Ideal location for an antenna is in LOS (line of sight) of the counterpart that it is trying to communicate with. Under LOS conditions the signals propagate directly between the two communication nodes, without relying on signal bouncing off a wall or other structure to reach the counterpart. This is sometimes not possible to achieve in practice, but it is a useful goal to keep in mind when optimizing antenna location.
- While it is good to keep RF cables short, it is most desirable for an antenna to be in the best location it can be to provide the desired coverage.
- For large deployments involving multiple units communicating with each other across a complex urban or industrial landscape, consider running an RF propagation modeling study to predict approximate simulated coverage maps and determine initial placement of the units. A propagation study may help reduce overall deployment cost by discovering and mitigating issues with RF coverage before the infrastructure is physically installed.
- Keep the antenna away from metal obstructions such as heating and air-conditioning ducts, large ceiling trusses, building superstructures, and major power cabling runs. One exception is if the antenna is designed to be mounted on a ground plane. If mounting on a ground plane, mount the antenna on a flat metal surface away from adjacent obstructions.

- It is strongly recommended not to install antennas directly on the router or access point (AP), unless the router or AP is specifically engineered to directly mount the antennas. Products that are engineered for direct mounting of antennas specifically address each of the below issues.
- Reasons to mount antennas away from the router include:
  - Router location may not be optimal location for antenna to communicate with the counterpart wirelessly, so router and antenna may need to be in different locations.
  - Router may have a clutter of Ethernet cable and power cables around it, which will obstruct antenna signal.
  - A number of routers, such as the IR1835, are modular. They have plug-in RF modules for Wi-Fi , 4G LTE or 5G NR such as WP-WIFI6, P-LTEAP18-GL, P-5GS6-GL. These modules have RF connectors spaced close together, and while it is mechanically possible to install four or five antennas directly attached, this will result in significant degradation to RF performance of antennas due to mutual de-tuning between closely spaced antennas. It is strongly recommended to install antennas away from the chassis in modular cases.
- If installing an antenna indoors, consider that the density and electromagnetic properties of the materials used in the building construction determines the number of walls the signal can pass through and still maintain adequate coverage.
  - Paper and vinyl walls have very little effect on signal penetration.
  - Solid and pre-cast concrete walls limit signal penetration to one or two walls without degrading coverage.
  - Concrete and wood block walls limit signal penetration to three or four walls.
  - A signal can penetrate five or six walls constructed of drywall or wood.
  - A thick metal wall causes signals to reflect off, causing poor penetration.
  - A chain link fence or wire mesh spaced between 1 and 1 1/2 in. (2.5 and 3.8 cm) acts as a harmonic reflector that blocks a 2.4-GHz radio signal.
  - Install the antenna away from microwave ovens and 2-GHz cordless phones. These products can cause signal interference because they operate in the same frequency range as the device your antenna is connected to.

Communications, Services, and Additional Information

- To receive timely, relevant information from Cisco, sign up at Cisco Profile Manager.
- To get the business impact you're looking for with the technologies that matter, visit Cisco Services.
- To submit a service request, visit Cisco Support.
- To discover and browse secure, validated enterprise-class apps, products, solutions, and services, visit Cisco DevNet.
- To obtain general networking, training, and certification titles, visit Cisco Press.
- To find warranty information for a specific product or product family, access Cisco Warranty Finder.

Cisco Bug Search Tool

Cisco Bug Search Tool (BST) is a web-based tool that acts as a gateway to the Cisco bug tracking system that maintains a comprehensive list of defects and vulnerabilities in Cisco products and software. BST provides you with detailed defect information about your products and software.

Documentation Feedback

To provide feedback about Cisco technical documentation, use the feedback form available in the right pane of every online document.

Cisco Support Community

Cisco Support Community is a forum for you to ask and answer questions, share suggestions, and collaborate with your peers. Join the forum at https://supportforums.cisco.com/index.jspa.

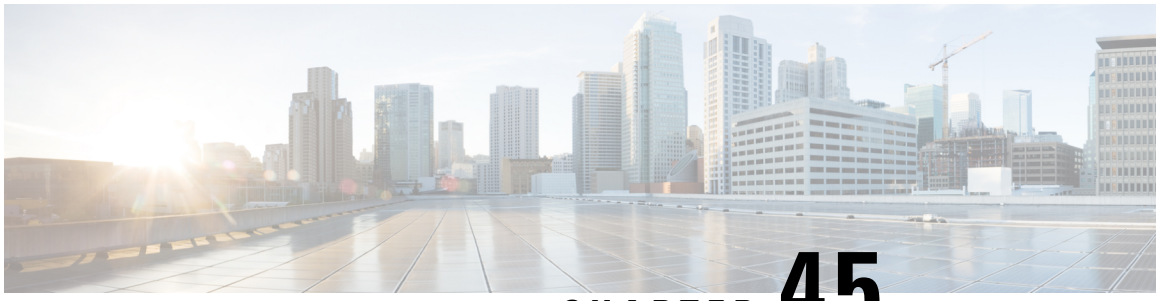

CHAPTER 45

Cisco Multi-purpose Integrated Antenna (ANT-MP-INT-OUT-M)

This chapter contains the following:

- Overview, on page 747
- Technical Specifications, on page 747
- Radiation Patterns, on page 749
- Integrated Antenna Kit, on page 754
- General Safety Precautions, on page 755
- Guidelines to Achieving Optimal RF and Antenna Performance, on page 757
- Antenna Installation, on page 760
- Communications, Services, and Additional Information, on page 762

Overview

The Cisco Multipurpose Integrated Antenna is designed to cover domestic frequencies from 806 to 960 MHz and 1710 to 2700 MHz.

This antenna is designed for direct mounting on the CGR1240 and has an MCX connector.

This chapter covers the following topics:

Technical Specifications

The Multi-purpose Integrated Antenna features the following:

- Indoors and outdoors
- Low-profile housing
- Adjustable mounting brackets
- Supports 3G and 4G

Figure 302: Monopole Antenna

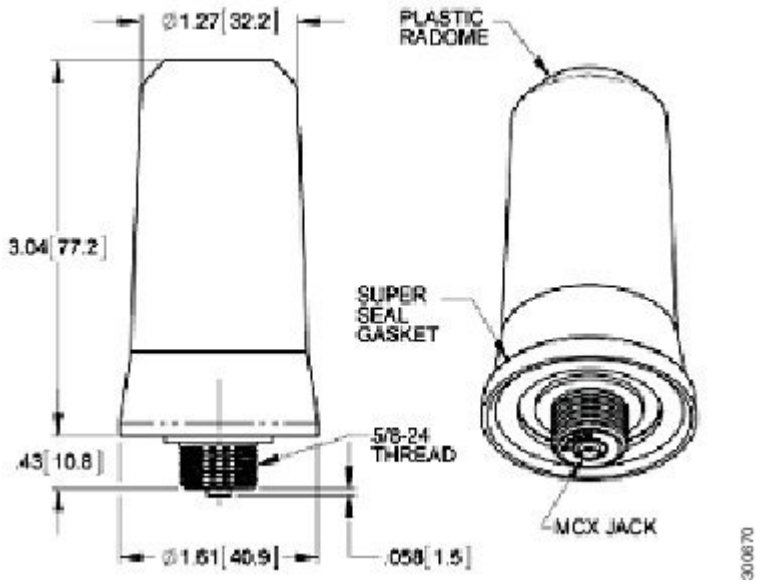

RF Specifications

The following is a summary of the monopole Radio Frequency (RF) antenna specifications:

Specification	Description
Operating frequency range	806 to 960 MHz1710 to 2170 MHz2300 to 2700 MHz
VSWR	2:1 max
Peak gain 806 to 960 MHz	2.8 dBi
Peak gain 1710 to 2170 MHz	3.5 dBi
Peak gain 2300 to 2700 MHz	4.0 dBi
Average gain @15 degrees elevation 806 to 960 MHz	0.0 dBi +/- 1.0 dB
Average gain @15 degrees elevation 1710 to 2170 MHz	1.0 dBi +/- 1.0 dB
Average gain @15 degrees elevation 2300 to 2700 MHz	2.5 dBi +/- 1.0 dB
Efficiency 806 to 960/1710 to 2170/2300 to 2700 MHz:	60% minimum
Polarization	Vertical -3 dB beamwidth
Horizontal plane	Omni
Vertical plane 806 to 960 MHz	59 degrees average
Vertical plane 1710 to 2170 MHz	46 degrees average

Specification	Description
Vertical plane 2300 to 2700 MHz	40 degrees average
Power withstanding	10 W
Connector type	MCX jack

Mechanical Specifications

The following is a summary of the monopole antenna mechanical specifications:

Specification	Description
Plastic radome	PC/polyester blend, Makroblend EL 703, .110 think min.
Flammability	UL94 V-0
Color	Cisco gray
Ingress protection	IP67
Weight	90 g
Wind-loading	165 MPH
Overall length	3.04 inches
Installation torque	6 to 9 ft/lbs
Installation tool	Recommended strap wrench, similar to McMaster Car P/N: 5448A31
Operating temperature	-40 to 185 degrees F (-40 to 85 degrees C)

Radiation Patterns

All radiation patterns, gain, and VSWR are measured with the antenna mounted at the center of a 12-by-12-inch ground plane.

Figure 303: Radiation Pattern—Vertical Plane

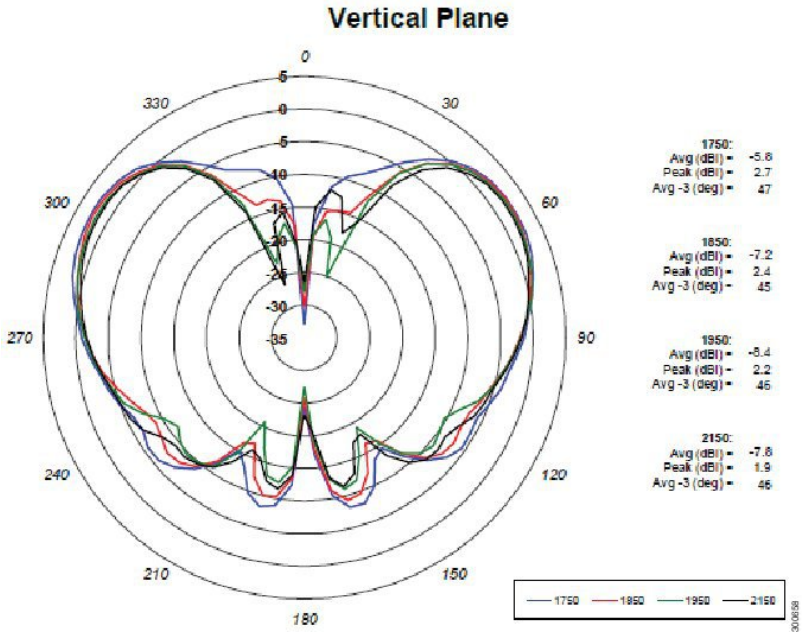

Figure 304: Radiation Pattern—Vertical Plane

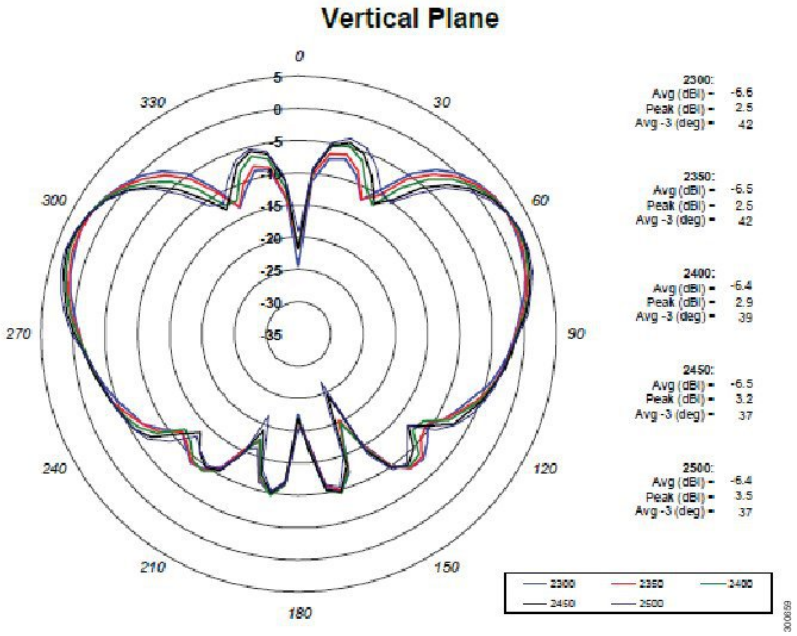

Figure 305: Radiation Pattern—Vertical Plane

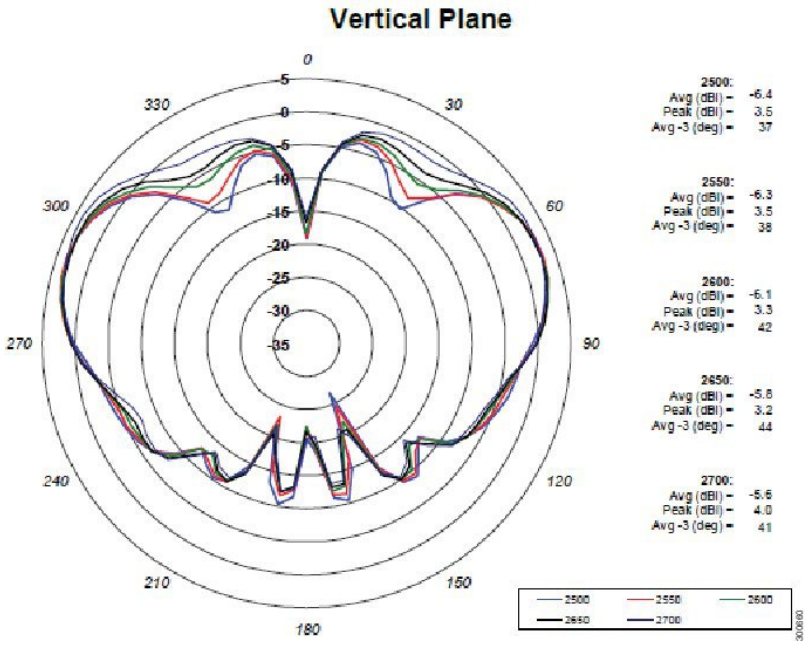

Figure 306: Radiation Pattern—Horizontal Plane

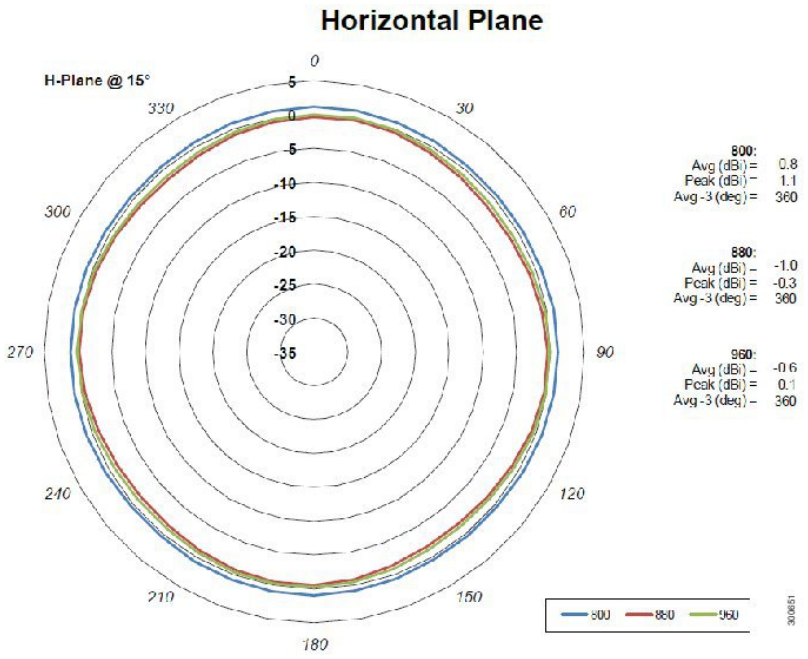

Figure 307: Radiation Pattern—Horizontal Plane

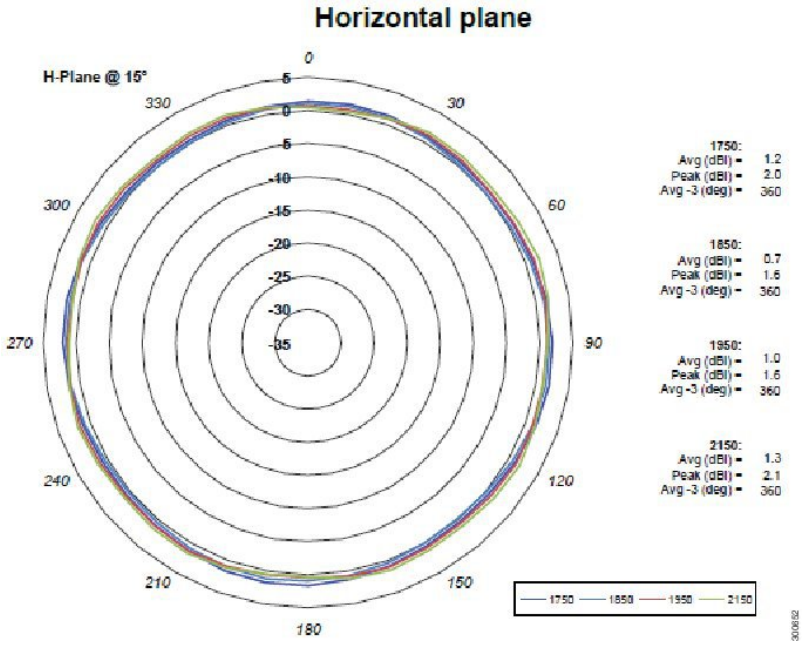

Figure 308: Radiation Pattern—Horizontal Plane

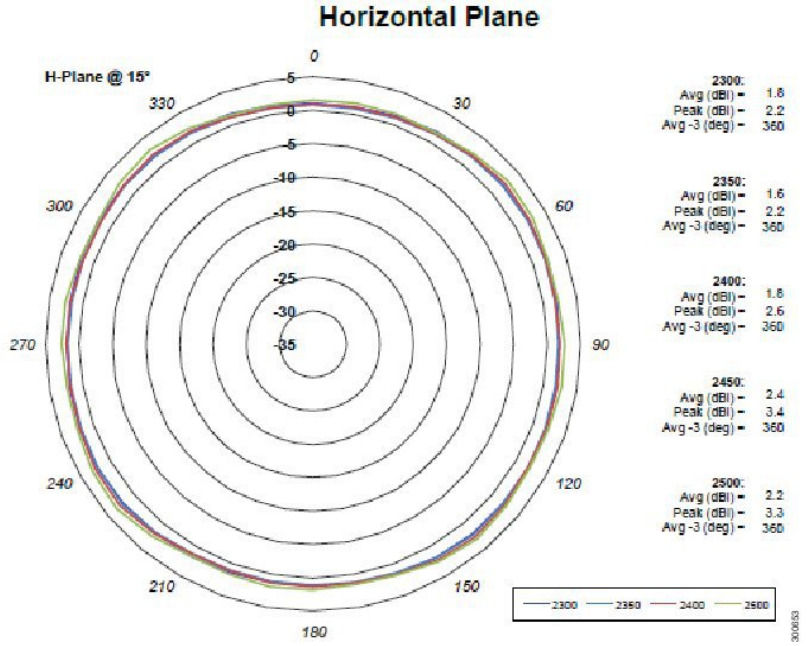

Figure 309: Radiation Pattern—Horizontal Plane

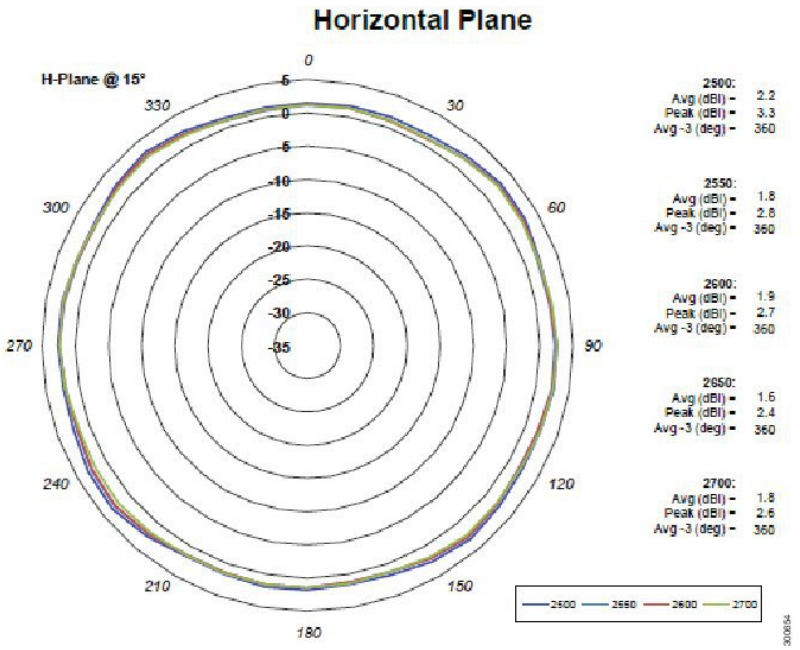

Figure 310: Radiation Pattern—VSWR

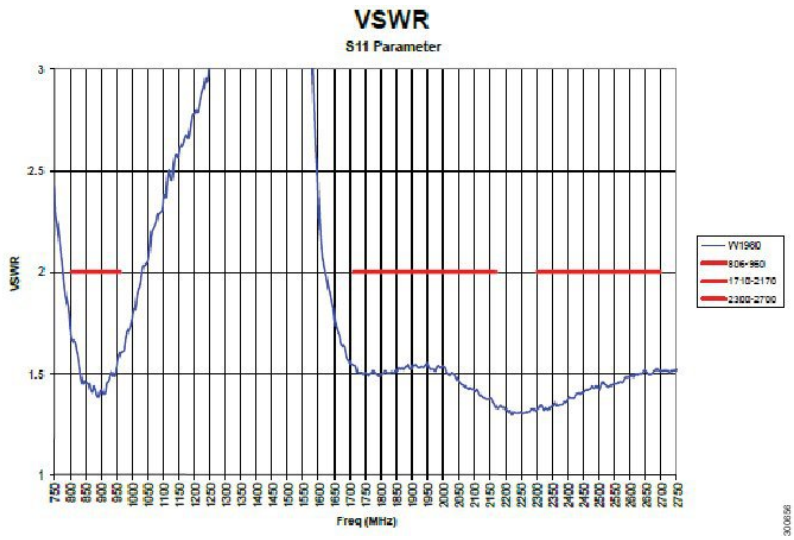

Figure 311: Radiation Pattern—Peak Gain

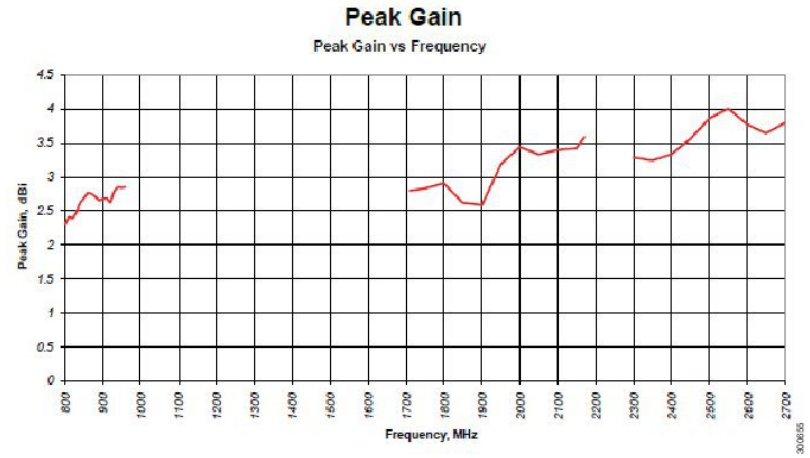

Figure 312: Radiation Pattern—Efficiency

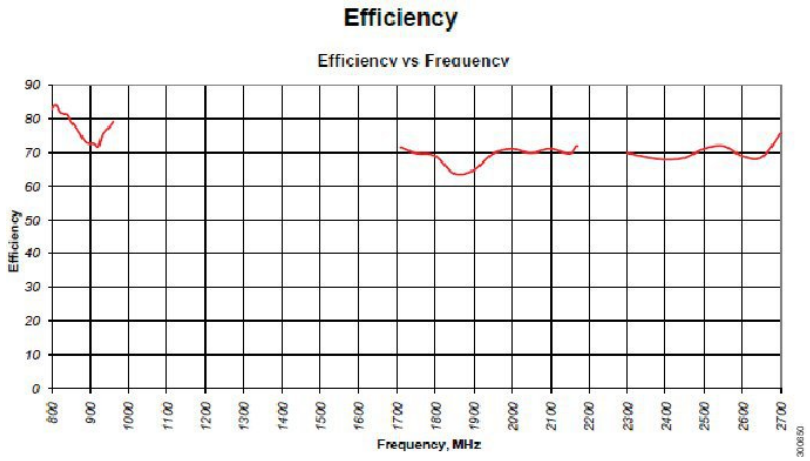

Integrated Antenna Kit

The multi-purpose integrated antenna is shown here but the kit is identical for all antenna models.

Figure 313: Antenna Kit

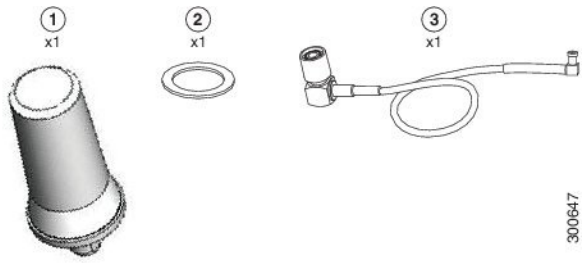

1	Module antenna, with integrated coaxial cable	2	Rubber gasket
3	Cable		

Integrated Antenna End Kit Inventory

The multi-purpose integrated antenna kit is identical for all antenna models.

- Antenna-to-module coaxial cable (MCX-to-QMA, 10.5”)
- Coax seal
- Tie wrap

Mounted Antenna End Kit Inventory

- N-connector
- Weather-proof coaxial seal
- Electrical joint compound
- Universal MCX-to-QMA cable (10.5”)
- Tie wraps
- Cap

General Safety Precautions

Warning This warning symbol means danger. You are in a situation that could cause bodily injury. Before you work on any equipment, be aware of the hazards involved with electrical circuitry and be familiar with standard practices for preventing accidents. Use the statement number provided at the end of each warning to locate its translation in the translated safety warnings that accompanied this device. **Statement 1071**

Warning Do not work on the system or connect or disconnect cables during periods of lightning activity. **Statement 1001**

Warning Do not locate the outdoor antenna near overhead power lines or other electric light or power circuits, or where it can come into contact with such circuits. When installing the antenna, take extreme care not to come into contact with such circuits, as they may cause serious injury or death. For proper installation and grounding of the antenna, please refer to national and local codes (for example, U.S.:NFPA 70, National Electrical Code, Article 810, Canada:Canadian Electrical Code, Section 54). **Statement 1052**

Warning In order to comply with FCC radio frequency (RF) exposure limits, antennas should be located at a minimum of 7.9 inches (20 cm) or more from the body of all persons. **Statement 332**

Note For your safety, and to help you achieve a good installation, please read and follow these safety precautions.

Mast Mounted or Building Mounted Installations

The following instructions are common to most mast mounted or building mounted installations. For specific installation instructions for each antenna, see the antenna data-sheet and the router hardware installation guide.

- Find someone to help you—installing an antenna is often a two-person job.
- Select your installation site with safety, as well as performance, in mind. Remember that electric power lines and phone lines look alike. For your safety, assume that any overhead line can kill you.
- Contact your electric power company. Tell them your plans and ask them to come look at your proposed installation.
- Do not use a metal ladder.
- Do not work on a wet or windy day.
- Do dress properly—wear shoes with rubber soles and heels, rubber gloves, and a long-sleeved shirt or jacket.
- If the assembly starts to drop, move away from it and let it fall. Because the antenna, mast, cable, and metal guy wires are all excellent conductors of electrical current, even the slightest touch of any of these parts to a power line completes an electrical path through the antenna and the installer.
- If any part of the antenna system should come in contact with a power line, do not touch it or try to remove it yourself. Call your local power company to have it removed safely.
- If an accident should occur with the power lines, call for qualified emergency help immediately.
- Assemble your new antenna on the ground or a level surface at the installation site.
- Connect its coaxial cable while you are on the ground and attach the antenna to the mast.
- Ensure that the mast does not fall as you raise or remove it. Use a durable non-conductive rope secured at each two foot level as the mast is raised. Have an assistant tend the rope, ready to pull the mast clear of any hazards (such as power lines) should it begin to fall.
- Use the mounting bracket provided with the antenna.
- If the installation will use guy wires:
    - Install guy anchor bolts.
    - Estimate the length of guy wire and cut it before raising the mast.
    - Attach guy wires to a mast using guy rings.
    - In the case of a guyed (tall, thin mast) installation, you must have at least one assistant to hold the mast upright while the guy wires are attached and tightened to the anchor bolts.

- Attach a “DANGER” label at eye level on the mast.
- Install ground rods to remove any static electricity buildup and connect a ground wire to the mast and ground rod. Use ground rods designed for that purpose, not a spare piece of pipe.

Unused Antenna Ports

Port plugs must be installed in any unused antenna ports.

The weatherproof caps on the connectors protect the router interior from environmental elements including water, heat, cold, and dust. They are installed on unused ports before the router is shipped.

When you install a new antenna in a port with an N-connector:

- Chassis-mounted antennas—Remove the weather proof cap before installing a chassis-mounted antenna.
- External antennas—Remove weatherproof cap, then connect the supported Cisco cable to the connector.

Guidelines to Achieving Optimal RF and Antenna Performance

Antennas are a critical component of a wireless communication system. Selecting a suitable antenna, an optimal antenna location, or antenna site is essential for optimum performance of a wireless links.

This section covers general tips for optimizing RF performance of indoor and outdoor terrestrial radio systems in the 400-7125 MHz frequency range. Examples of terrestrial radio systems include 4G LTE, 5G NR, Wi-Fi, LoRa, LR-WPAN and similar. In this context GPS SPS would not be considered a terrestrial system as the signal is received from space, not from another terrestrial site.

Because the antenna transmits and receives radio signals over the air, overall RF performance of the link is susceptible to RF obstructions and common sources of RF interference that can reduce throughput and range of the system.

Follow these guidelines to optimize performance. When in doubt, consult a qualified RF professional, and check with your solution partner for specific recommendations.

Antenna Model Selection and Performance

Consider the following when planning your installation:

- When selecting the antenna, ensure that it covers the frequency ranges or frequency bands of interest, and that it has good RF parameters such as antenna efficiency, VSWR and suitable radiation pattern for every frequency range that your application will use with this antenna.
- Antenna pattern is important. Omni-directional antennas have lower gain, but allow communicating to devices in all azimuth directions. Directional antennas concentrate the beam in a specific direction, making them ideal for point to point communication.
- When a system has multiple RF ports for receive and / or transmit, as is the case for 4G LTE , 5G NR or Wi-Fi, it is highly recommended to populate all the RF ports with suitable antennas to take advantage of MIMO, rather than rely on a single port or single antenna to save on cost. Please see the MIMO section for a detailed description of MIMO benefits.
- For RF systems that support multiple RF ports and multiple RF standards such as LTE, Wi-Fi, and GPS: consider using a multi-element antenna that integrates multiple antennas under the same radome (cover).

Doing so may reduce cost compared to deploying and mounting a discrete single port antenna for every RF port.

- For communication between fixed infrastructure devices, such as mesh nodes or a point-to-point backhaul link, each device should have an antenna with the same polarization. If communicating with mobile devices that might be randomly oriented, consider dual-polarized antennas, such as those with both vertical and horizontal or slant +45° and -45° polarized elements.

Antenna Environmental Specifications

The selected antenna must have suitable mechanical and environmental specifications for the environment where it will be deployed. For example, shock and vibration specifications for transportation, corrosion resistant construction for marine and oil and gas industries, or IP (ingress protection) rating for outdoor deployment. Indoor antennas are typically not suitable for harsh industrial environments. Please check with your system integrator for environmental requirements for your application.

Antenna Accessories and Mounting

Consider the following when planning your installation:

- Carefully consider what type of other RF accessories, besides antenna, such as RF cables, lightning arrestors or RF adapters may be required in your installations. It is best to minimize long RF cable runs due to RF signal losses in the cable. Thinner RF cables have more RF loss , thicker cables are less flexible and more expensive.
- Carefully consider how the antenna will be physically mounted, as this may affect antenna selection. For example, a stud mount mechanical mounting design is a better fit for mounting on top of an electrical cabinet than a mast mount antenna.
- For outdoor deployments, follow installation instructions for the antenna. It is good practice to keep protective covers on the radio's RF ports and any antenna or accessory RF ports until the moment the interfaces are mated. This reduces chances of contamination, trapping water or condensation inside the connector, or accidental damage to RF interfaces.

MIMO Performance and Arrays

MIMO systems deliver benefits of higher SNR, higher reliability and higher throughput compared to single antenna systems. In more technical terms, MIMO delivers array gain, diversity gain and multiplexing gain compared to single antenna.

- Array gain — Improvement in SNR (signal to noise ratio) by coherently combining signals from multiple antennas. For example, increasing SNR through beamforming techniques.
- Diversity gain — Improvement in reliability by mitigating deep fading or strong destructive EM wave interference. For example, in a two-antenna system, if one antenna is experiencing deep fading due to an EM destructive null at its location at a given instant, the other antenna is unlikely to have a null at the same instant, and the combined SNR stays at a reliable level. In contrast, a single antenna would see SNR oscillating between good SNR and very poor SNR and reliability would degrade.
- Multiplexing gain — Increase in system capacity or throughput by sending independent data over multiple spatial streams simultaneously. The number of streams cannot be more than the number of antennas. For example, to support three spatial streams, a minimum of three antennas is required. Often there may be additional antennas for diversity or redundancy, such as in the case of 4x4:3, or 4x4 MIMO with 3 spatial streams.

If deploying multiple single-element antennas for a MIMO system in an array, ensure sufficient spacing between the antennas. Omnidirectional elements should generally be at least one wavelength apart at the lowest operating frequency.

Consider the following:

- For Wi-Fi systems operating in the 2.4, 5, and/or 6 GHz bands, space elements at least 5 inches (12.5 cm) apart.
- For 4G LTE and 5G systems with the lowest operating frequency of 617 MHz , space elements at least 20 inches (50 cm) apart.
- Note that spacing between elements inside multi-element MIMO antennas is often less than one wavelength. However multi-element antennas are engineered with MIMO performance in mind, by providing antenna diversity through pattern, polarization, and isolation between MIMO elements.

Antenna siting and location

Consider the following when planning your installation:

- Plan antenna location ahead of time. Ideal location for an antenna is in LOS (line of sight) of the counterpart that it is trying to communicate with. Under LOS conditions the signals propagate directly between the two communication nodes, without relying on signal bouncing off a wall or other structure to reach the counterpart. This is sometimes not possible to achieve in practice, but it is a useful goal to keep in mind when optimizing antenna location.
- While it is good to keep RF cables short, it is most desirable for an antenna to be in the best location it can be to provide the desired coverage.
- For large deployments involving multiple units communicating with each other across a complex urban or industrial landscape, consider running an RF propagation modeling study to predict approximate simulated coverage maps and determine initial placement of the units. A propagation study may help reduce overall deployment cost by discovering and mitigating issues with RF coverage before the infrastructure is physically installed.
- Keep the antenna away from metal obstructions such as heating and air-conditioning ducts, large ceiling trusses, building superstructures, and major power cabling runs. One exception is if the antenna is designed to be mounted on a ground plane. If mounting on a ground plane, mount the antenna on a flat metal surface away from adjacent obstructions.
- It is strongly recommended not to install antennas directly on the router or access point (AP), unless the router or AP is specifically engineered to directly mount the antennas. Products that are engineered for direct mounting of antennas specifically address each of the below issues.
- Reasons to mount antennas away from the router include:
    - Router location may not be optimal location for antenna to communicate with the counterpart wirelessly, so router and antenna may need to be in different locations.
    - Router may have a clutter of Ethernet cable and power cables around it, which will obstruct antenna signal.
    - A number of routers, such as the IR1835, are modular. They have plug-in RF modules for Wi-Fi , 4G LTE or 5G NR such as WP-WIFI6, P-LTEAP18-GL, P-5GS6-GL. These modules have RF connectors spaced close together, and while it is mechanically possible to install four or five antennas directly attached, this will result in significant degradation to RF performance of antennas due to

mutual de-tuning between closely spaced antennas. It is strongly recommended to install antennas away from the chassis in modular cases.

- If installing an antenna indoors, consider that the density and electromagnetic properties of the materials used in the building construction determines the number of walls the signal can pass through and still maintain adequate coverage.
  - Paper and vinyl walls have very little effect on signal penetration.
  - Solid and pre-cast concrete walls limit signal penetration to one or two walls without degrading coverage.
  - Concrete and wood block walls limit signal penetration to three or four walls.
  - A signal can penetrate five or six walls constructed of drywall or wood.
  - A thick metal wall causes signals to reflect off, causing poor penetration.
  - A chain link fence or wire mesh spaced between 1 and 1 1/2 in. (2.5 and 3.8 cm) acts as a harmonic reflector that blocks a 2.4-GHz radio signal.
  - Install the antenna away from microwave ovens and 2-GHz cordless phones. These products can cause signal interference because they operate in the same frequency range as the device your antenna is connected to.

Antenna Installation

This section covers the following topics:

Installation Notes

This Cisco Multi-purpose Integrated Antenna is designed to be mounted directly onto the router.

In addition to antenna orientation, wireless access point installation location with respect to all wireless clients plays a significant role in determining overall network performance.

Because antennas transmit and receive radio signals, their performance can be adversely affected by the surrounding environment including distance between the Field Area Router (FAR) and cellular base station, physical obstructions, or radio frequency (RF) interference.

Tools and Equipment Required

In addition to the parts included in the antenna kit described in the previous section, you must provide the following tool to install the antenna on the router:

- Strap wrench
- 13 mm socket wrench

Installing the Antenna

Follow these steps to install the antenna onto the CGR 1240 router:

Step 1 Remove the plug on the antenna connector if one is present.

Step 2 Attach the monopole antenna to your desired antenna port. Do not tighten the antenna completely—stop tightening so that the antenna is not fully installed.

Figure 314: Insert Base of Antenna into Router Antenna Port

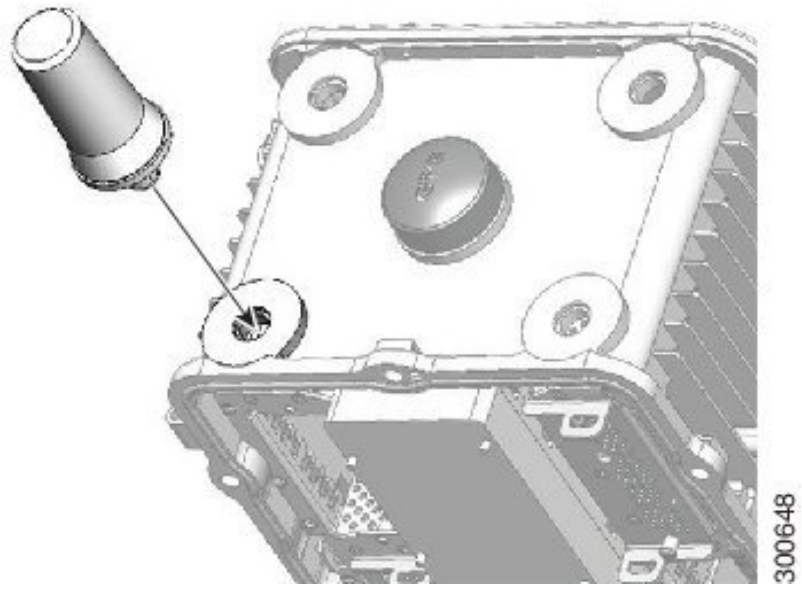

Step 3 From the chassis interior, the antenna MCX jack should be visible in the plug. With one hand, position the right-angle end of the antenna cable to the antenna's MCX jack. With your other hand, push the cable end so it inserts into the MCX jack of the antenna.

Figure 315: Antenna Details

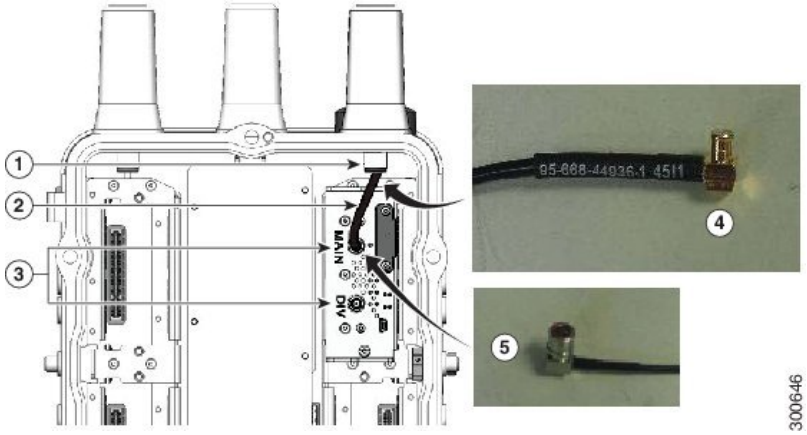

1	Antenna base

2	Antenna-to-router coaxial antenna cable (with QMA-male connector)
3	Connected Grid module coaxial connectors (QMA-female)
4	MCX end
5	QMA end

Step 4 From the exterior of the router, tighten the antenna using the torque wrench. Tighten to 6 to 7 ft-lbs.

Step 5 From the interior of the router, install the coaxial end of the cable to the appropriate connector on your installed module. The antenna and module ports should be the same color (red, yellow, or green).

Note Some modules require two antennas: a main antenna and a diversity antenna. These modules have two antenna connectors on the front panel, labeled MAIN and DIV. Be sure to connect the main and diversity antennas to the correct module connectors.

Communications, Services, and Additional Information

- To receive timely, relevant information from Cisco, sign up at Cisco Profile Manager.
- To get the business impact you're looking for with the technologies that matter, visit Cisco Services.
- To submit a service request, visit Cisco Support.
- To discover and browse secure, validated enterprise-class apps, products, solutions, and services, visit Cisco DevNet.
- To obtain general networking, training, and certification titles, visit Cisco Press.
- To find warranty information for a specific product or product family, access Cisco Warranty Finder.

Cisco Bug Search Tool

Cisco Bug Search Tool (BST) is a web-based tool that acts as a gateway to the Cisco bug tracking system that maintains a comprehensive list of defects and vulnerabilities in Cisco products and software. BST provides you with detailed defect information about your products and software.

Documentation Feedback

To provide feedback about Cisco technical documentation, use the feedback form available in the right pane of every online document.

Cisco Support Community

Cisco Support Community is a forum for you to ask and answer questions, share suggestions, and collaborate with your peers. Join the forum at https://supportforums.cisco.com/index.jspa.

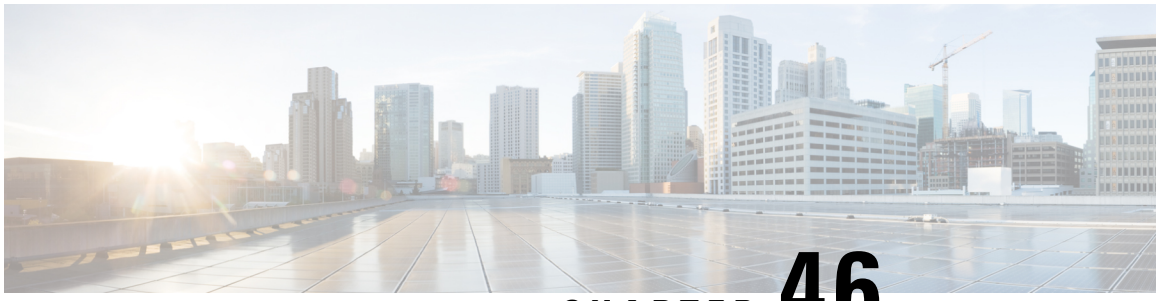

CHAPTER 46

ANT-MP2-I-OUT-M and ANT-MP2-I-O-SS-M Antenna and Cable Kits

This chapter contains the following:

- Overview, on page 763
- Technical Specifications, on page 763
- Radiation Patterns, on page 766
- Integrated Antenna Kits, on page 770
- General Safety Precautions, on page 771
- Guidelines to Achieving Optimal RF and Antenna Performance, on page 772
- Antenna Installation, on page 776
- Communications, Services, and Additional Information, on page 778

Overview

The Cisco ANT-MP2-I-OUT-M and ANT-MP2-I-O-SS-M antennas and cable kits are designed to cover frequencies from 698 to 960 MHz and 1710 to 2700 MHz.

The antennas are designed for direct mounting on the CGR1240 and have an MCX connector.

Technical Specifications

The Multi-purpose Integrated Antenna features the following:

- Indoors and outdoors operation, IP67 rated
- Low-profile housing
- Supports 3G and 4G, 915 MHz ISM, and 2.4 GHz WiFi and other bands
- High performance 698-960, 1710-2700 MHz antenna

Figure 316: Monopole Antenna

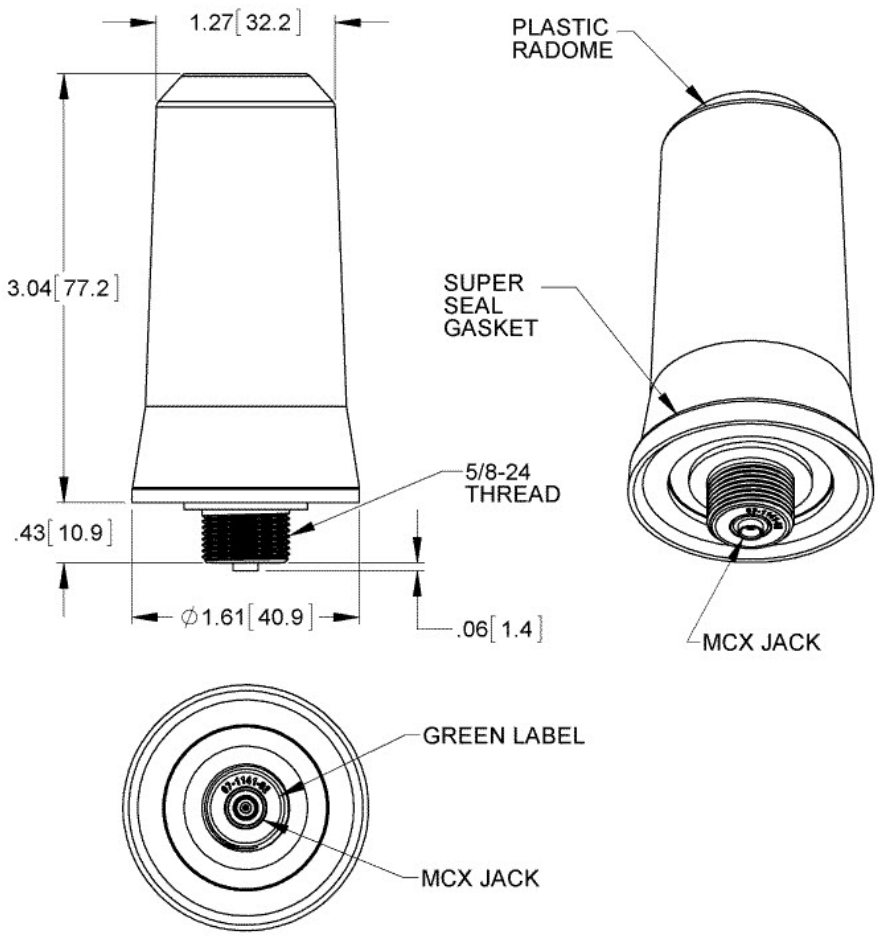

RF Specifications

The following is a summary of the monopole Radio Frequency (RF) antenna specifications:

Specification	Description
Operating frequency range	698 to 960 MHz1710 to 2170 MHz2300 to 2700 MHz
VSWR	2:1 max
Peak gain 698 to 960 MHz	2.8 dBi
Peak gain 1710 to 2170 MHz	4.3 dBi
Peak gain 2300 to 2700 MHz	5.0 dBi

Specification	Description
Average gain @15 degrees elevation 698 to 960 MHz	0.9 dBi +/- 1.0 dB
Average gain @15 degrees elevation 1710 to 2170 MHz	3.0 dBi +/- 1.0 dB
Average gain @15 degrees elevation 2300 to 2700 MHz	4.0 dBi +/- 1.0 dB
Efficiency 698 to 960/1710 to 2170/2300 to 2700 MHz:	minimum 75%
Polarization	Vertical
HPBW Horizontal plane @15 degrees	Omni, 360 degree
HPBW Vertical plane 698 to 960 MHz	66 degrees average
HPBW Vertical plane 1710 to 2170 MHz	47 degrees average
HPBW Vertical plane 2300 to 2700 MHz	42 degrees average
Power handling, CW	10 W
Connector type	MCX jack

Mechanical Specifications

The following is a summary of the monopole antenna specifications:

Specification	Description
Plastic radome	PC/polyester blend, .110 thick min.
Flammability	UL94 V-0
Color	Cisco gray
Ingress protection	IP67
Weight	90 g
Wind-loading	165 MPH
Overall length	3.04 inches
Installation torque	6 to 9 ft/lbs
Installation tool	Recommended strap wrench, similar to McMaster Car P/N: 5448A31
Operating temperature	-40 to 185 degrees F (-40 to 85 degrees C)

Radiation Patterns

All radiation patterns, gain, and VSWR were measured with the antenna mounted at the center of a 12-by-12-inch ground plane.

Figure 317: Radiation Pattern—Vertical Plane

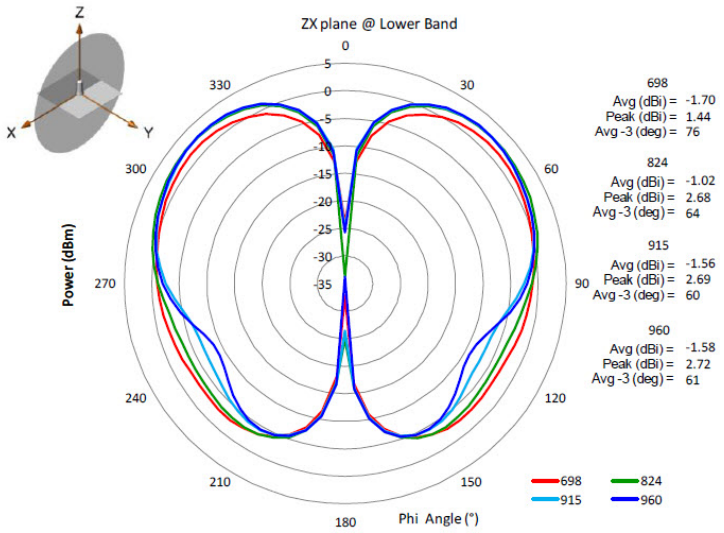

Figure 318: Radiation Pattern—Vertical Plane

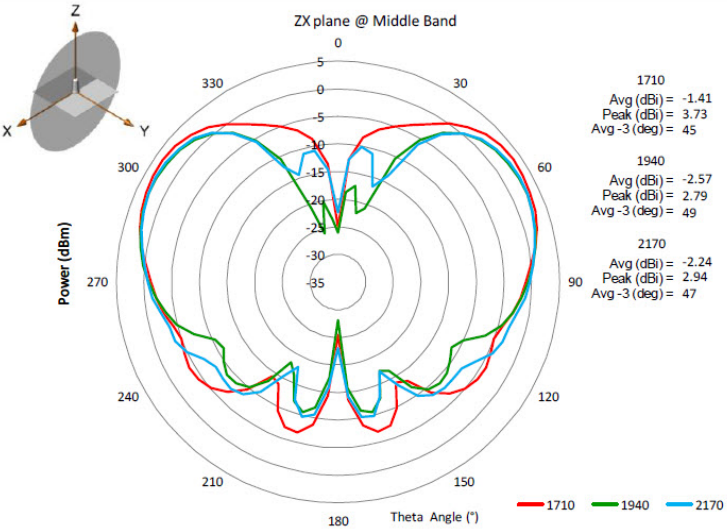

Figure 319: Radiation Pattern—Vertical Plane

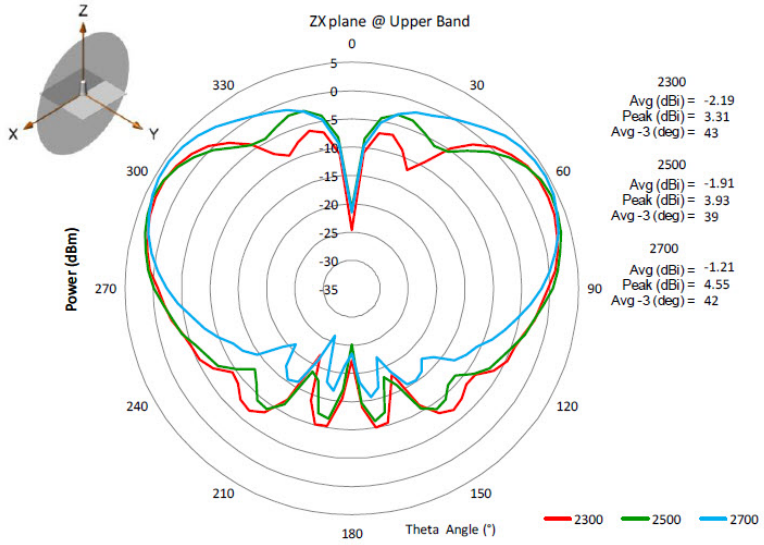

Figure 320: Radiation Pattern—Horizontal Plane

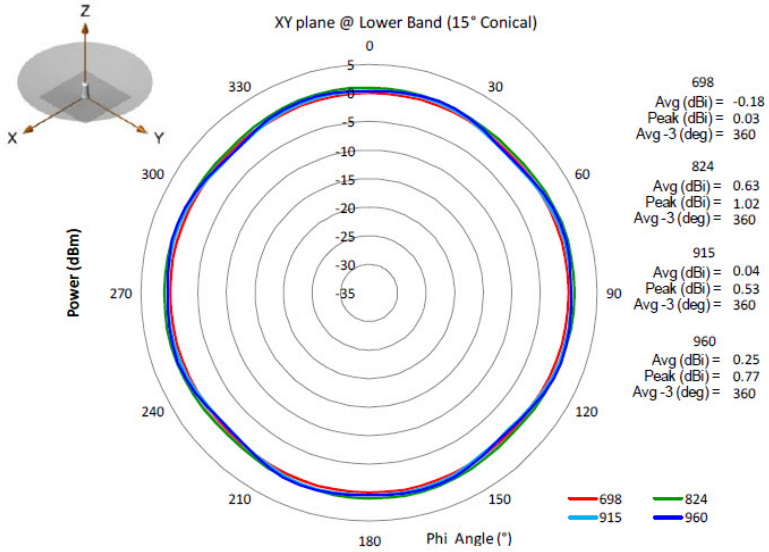

Figure 321: Radiation Pattern—Horizontal Plane

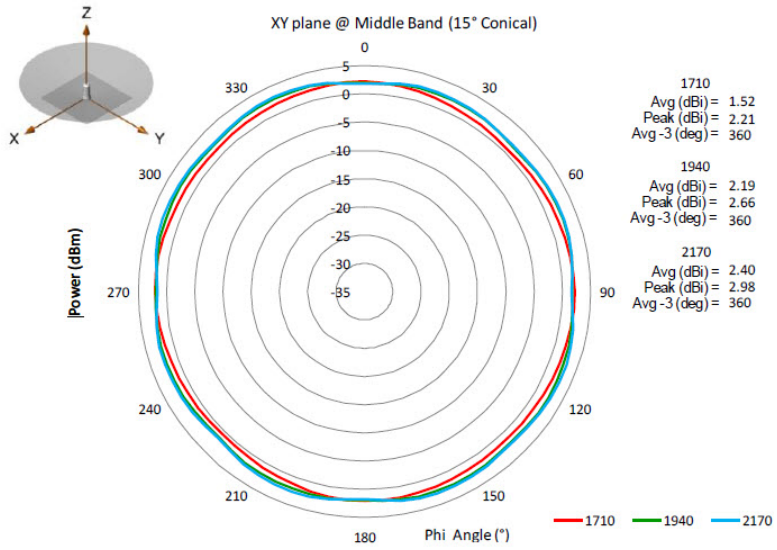

Figure 322: Radiation Pattern—Horizontal Plane

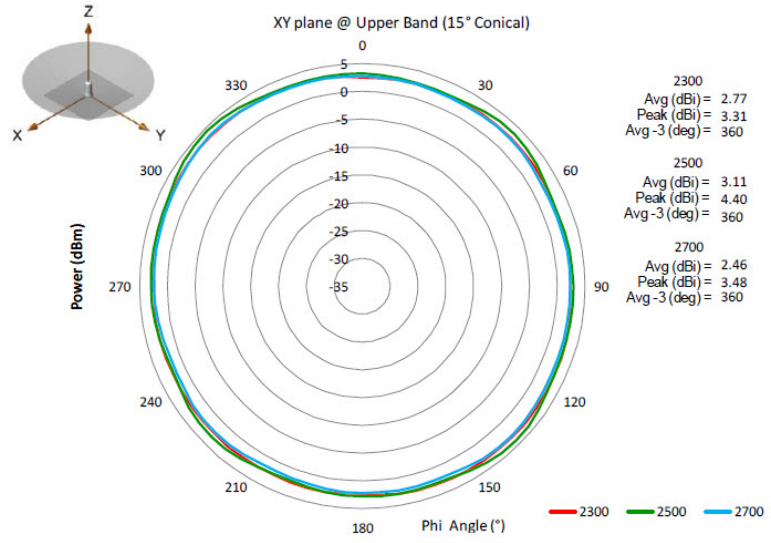

Figure 323: VSWR

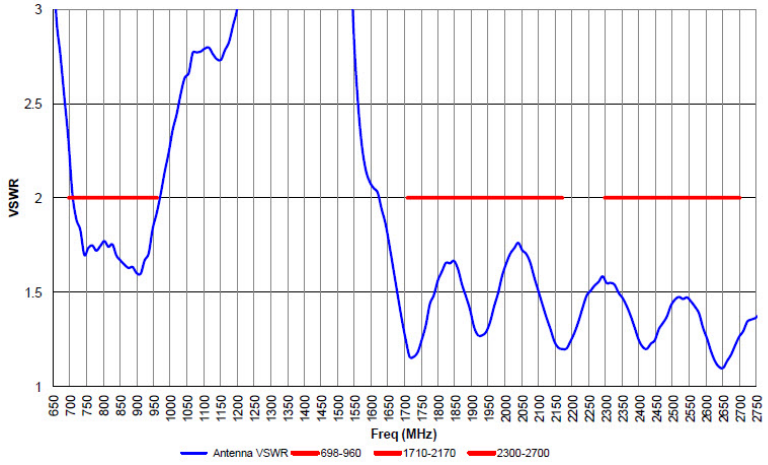

Figure 324: Peak Gain

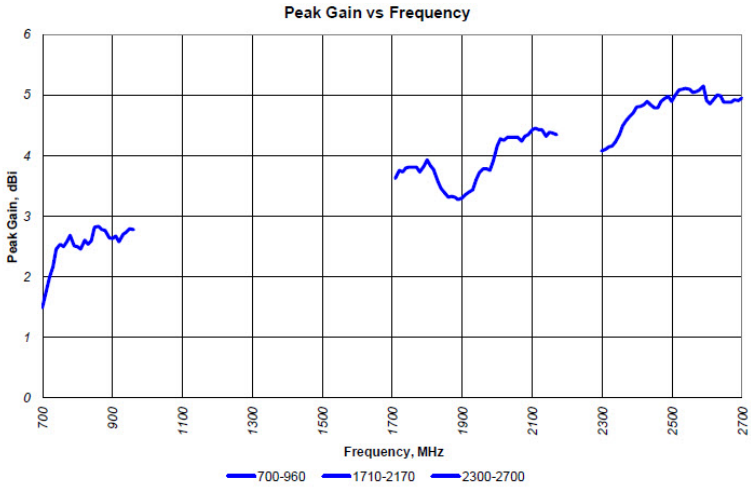

Figure 325: Efficiency

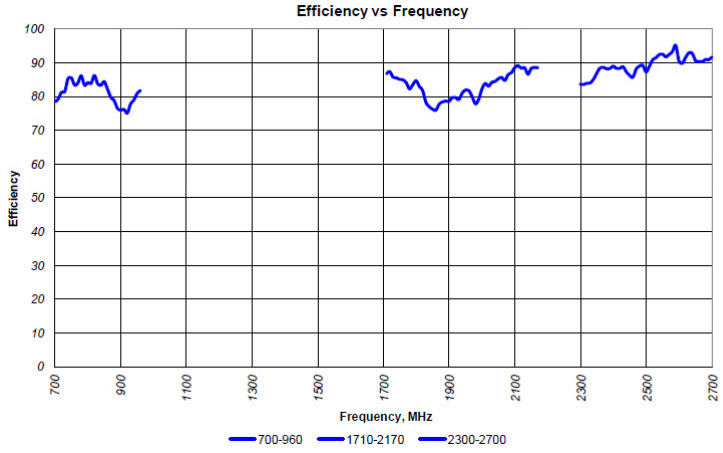

Integrated Antenna Kits

Antennas are only sold as antenna + cable kits. The kit will contain one or more antennas, gaskets, and coaxial cables. See the following:

Figure 326: Antenna Kit (Antenna, Gasket and Cable)

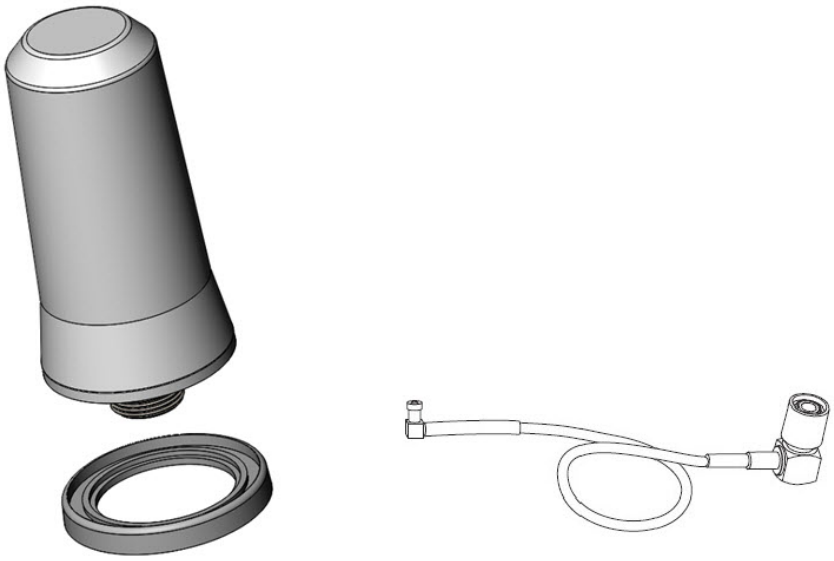

Integrated Antenna Kit Inventory

The antenna and other items contained in all of the kits are identical. Quantity changes depending on the kit selected.

- Antenna
- Coax seal
- Tie wrap

	Antenna quantity	Gasket quantity	10.5" RF Cable quantity	Tie Wrap quantity
ANT-MP2-I-OUT-M	1	1	1	1
ANT-MP2-I-O-SS-M	2	2	2	2

General Safety Precautions

Warning This warning symbol means danger. You are in a situation that could cause bodily injury. Before you work on any equipment, be aware of the hazards involved with electrical circuitry and be familiar with standard practices for preventing accidents. Use the statement number provided at the end of each warning to locate its translation in the translated safety warnings that accompanied this device. **Statement 1071**

Warning Do not work on the system or connect or disconnect cables during periods of lightning activity. **Statement 1001**

Warning Do not locate the outdoor antenna near overhead power lines or other electric light or power circuits, or where it can come into contact with such circuits. When installing the antenna, take extreme care not to come into contact with such circuits, as they may cause serious injury or death. For proper installation and grounding of the antenna, please refer to national and local codes (for example, U.S.:NFPA 70, National Electrical Code, Article 810, Canada:Canadian Electrical Code, Section 54). **Statement 1052**

Warning In order to comply with FCC radio frequency (RF) exposure limits, antennas should be located at a minimum of 7.9 inches (20 cm) or more from the body of all persons. **Statement 332**

Note For your safety, and to help you achieve a good installation, please read and follow these safety precautions.

Mast Mounted or Building Mounted Installations

The following instructions are common to most mast mounted or building mounted installations. For specific installation instructions for each antenna, see the antenna data-sheet and the router hardware installation guide.

- Find someone to help you—installing an antenna is often a two-person job.
- Select your installation site with safety, as well as performance, in mind. Remember that electric power lines and phone lines look alike. For your safety, assume that any overhead line can kill you.
- Contact your electric power company. Tell them your plans and ask them to come look at your proposed installation.
- Do not use a metal ladder.
- Do not work on a wet or windy day.
- Do dress properly—wear shoes with rubber soles and heels, rubber gloves, and a long-sleeved shirt or jacket.

- If the assembly starts to drop, move away from it and let it fall. Because the antenna, mast, cable, and metal guy wires are all excellent conductors of electrical current, even the slightest touch of any of these parts to a power line completes an electrical path through the antenna and the installer.
- If any part of the antenna system should come in contact with a power line, do not touch it or try to remove it yourself. Call your local power company to have it removed safely.
- If an accident should occur with the power lines, call for qualified emergency help immediately.
- Assemble your new antenna on the ground or a level surface at the installation site.
- Connect its coaxial cable while you are on the ground and attach the antenna to the mast.
- Ensure that the mast does not fall as you raise or remove it. Use a durable non-conductive rope secured at each two foot level as the mast is raised. Have an assistant tend the rope, ready to pull the mast clear of any hazards (such as power lines) should it begin to fall.
- Use the mounting bracket provided with the antenna.
- If the installation will use guy wires:
  - Install guy anchor bolts.
  - Estimate the length of guy wire and cut it before raising the mast.
  - Attach guy wires to a mast using guy rings.
  - In the case of a guyed (tall, thin mast) installation, you must have at least one assistant to hold the mast upright while the guy wires are attached and tightened to the anchor bolts.
- Attach a “DANGER” label at eye level on the mast.
- Install ground rods to remove any static electricity buildup and connect a ground wire to the mast and ground rod. Use ground rods designed for that purpose, not a spare piece of pipe.

Unused Antenna Ports

Port plugs must be installed in any unused antenna ports.

The weatherproof caps on the connectors protect the router interior from environmental elements including water, heat, cold, and dust. They are installed on unused ports before the router is shipped.

When you install a new antenna in a port with an N-connector:

- Chassis-mounted antennas—Remove the weather proof cap before installing a chassis-mounted antenna.
- External antennas—Remove weatherproof cap, then connect the supported Cisco cable to the connector.

Guidelines to Achieving Optimal RF and Antenna Performance

Antennas are a critical component of a wireless communication system. Selecting a suitable antenna, an optimal antenna location, or antenna site is essential for optimum performance of a wireless links.

This section covers general tips for optimizing RF performance of indoor and outdoor terrestrial radio systems in the 400-7125 MHz frequency range. Examples of terrestrial radio systems include 4G LTE, 5G NR, Wi-Fi,

LoRa, LR-WPAN and similar. In this context GPS SPS would not be considered a terrestrial system as the signal is received from space, not from another terrestrial site.

Because the antenna transmits and receives radio signals over the air, overall RF performance of the link is susceptible to RF obstructions and common sources of RF interference that can reduce throughput and range of the system.

Follow these guidelines to optimize performance. When in doubt, consult a qualified RF professional, and check with your solution partner for specific recommendations.

Antenna Model Selection and Performance

Consider the following when planning your installation:

- When selecting the antenna, ensure that it covers the frequency ranges or frequency bands of interest, and that it has good RF parameters such as antenna efficiency, VSWR and suitable radiation pattern for every frequency range that your application will use with this antenna.
- Antenna pattern is important. Omni-directional antennas have lower gain, but allow communicating to devices in all azimuth directions. Directional antennas concentrate the beam in a specific direction, making them ideal for point to point communication.
- When a system has multiple RF ports for receive and / or transmit, as is the case for 4G LTE , 5G NR or Wi-Fi, it is highly recommended to populate all the RF ports with suitable antennas to take advantage of MIMO, rather than rely on a single port or single antenna to save on cost. Please see the MIMO section for a detailed description of MIMO benefits.
- For RF systems that support multiple RF ports and multiple RF standards such as LTE, Wi-Fi, and GPS: consider using a multi-element antenna that integrates multiple antennas under the same radome (cover). Doing so may reduce cost compared to deploying and mounting a discrete single port antenna for every RF port.
- For communication between fixed infrastructure devices, such as mesh nodes or a point-to-point backhaul link, each device should have an antenna with the same polarization. If communicating with mobile devices that might be randomly oriented, consider dual-polarized antennas, such as those with both vertical and horizontal or slant +45° and -45° polarized elements.

Antenna Environmental Specifications

The selected antenna must have suitable mechanical and environmental specifications for the environment where it will be deployed. For example, shock and vibration specifications for transportation, corrosion resistant construction for marine and oil and gas industries, or IP (ingress protection) rating for outdoor deployment. Indoor antennas are typically not suitable for harsh industrial environments. Please check with your system integrator for environmental requirements for your application.

Antenna Accessories and Mounting

Consider the following when planning your installation:

- Carefully consider what type of other RF accessories, besides antenna, such as RF cables, lightning arrestors or RF adapters may be required in your installations. It is best to minimize long RF cable runs due to RF signal losses in the cable. Thinner RF cables have more RF loss , thicker cables are less flexible and more expensive.

- Carefully consider how the antenna will be physically mounted, as this may affect antenna selection. For example, a stud mount mechanical mounting design is a better fit for mounting on top of an electrical cabinet than a mast mount antenna.
- For outdoor deployments, follow installation instructions for the antenna. It is good practice to keep protective covers on the radio's RF ports and any antenna or accessory RF ports until the moment the interfaces are mated. This reduces chances of contamination, trapping water or condensation inside the connector, or accidental damage to RF interfaces.

MIMO Performance and Arrays

MIMO systems deliver benefits of higher SNR, higher reliability and higher throughput compared to single antenna systems. In more technical terms, MIMO delivers array gain, diversity gain and multiplexing gain compared to single antenna.

- Array gain — Improvement in SNR (signal to noise ratio) by coherently combining signals from multiple antennas. For example, increasing SNR through beamforming techniques.
- Diversity gain — Improvement in reliability by mitigating deep fading or strong destructive EM wave interference. For example, in a two-antenna system, if one antenna is experiencing deep fading due to an EM destructive null at its location at a given instant, the other antenna is unlikely to have a null at the same instant, and the combined SNR stays at a reliable level. In contrast, a single antenna would see SNR oscillating between good SNR and very poor SNR and reliability would degrade.
- Multiplexing gain — Increase in system capacity or throughput by sending independent data over multiple spatial streams simultaneously. The number of streams cannot be more than the number of antennas. For example, to support three spatial streams, a minimum of three antennas is required. Often there may be additional antennas for diversity or redundancy, such as in the case of 4x4:3, or 4x4 MIMO with 3 spatial streams.

If deploying multiple single-element antennas for a MIMO system in an array, ensure sufficient spacing between the antennas. Omnidirectional elements should generally be at least one wavelength apart at the lowest operating frequency.

Consider the following:

- For Wi-Fi systems operating in the 2.4, 5, and/or 6 GHz bands, space elements at least 5 inches (12.5 cm) apart.
- For 4G LTE and 5G systems with the lowest operating frequency of 617 MHz , space elements at least 20 inches (50 cm) apart.
- Note that spacing between elements inside multi-element MIMO antennas is often less than one wavelength. However multi-element antennas are engineered with MIMO performance in mind, by providing antenna diversity through pattern, polarization, and isolation between MIMO elements.

Antenna siting and location

Consider the following when planning your installation:

- Plan antenna location ahead of time. Ideal location for an antenna is in LOS (line of sight) of the counterpart that it is trying to communicate with. Under LOS conditions the signals propagate directly between the two communication nodes, without relying on signal bouncing off a wall or other structure to reach the counterpart. This is sometimes not possible to achieve in practice, but it is a useful goal to keep in mind when optimizing antenna location.

- While it is good to keep RF cables short, it is most desirable for an antenna to be in the best location it can be to provide the desired coverage.
- For large deployments involving multiple units communicating with each other across a complex urban or industrial landscape, consider running an RF propagation modeling study to predict approximate simulated coverage maps and determine initial placement of the units. A propagation study may help reduce overall deployment cost by discovering and mitigating issues with RF coverage before the infrastructure is physically installed.
- Keep the antenna away from metal obstructions such as heating and air-conditioning ducts, large ceiling trusses, building superstructures, and major power cabling runs. One exception is if the antenna is designed to be mounted on a ground plane. If mounting on a ground plane, mount the antenna on a flat metal surface away from adjacent obstructions.
- It is strongly recommended not to install antennas directly on the router or access point (AP), unless the router or AP is specifically engineered to directly mount the antennas. Products that are engineered for direct mounting of antennas specifically address each of the below issues.
- Reasons to mount antennas away from the router include:
    - Router location may not be optimal location for antenna to communicate with the counterpart wirelessly, so router and antenna may need to be in different locations.
    - Router may have a clutter of Ethernet cable and power cables around it, which will obstruct antenna signal.
    - A number of routers, such as the IR1835, are modular. They have plug-in RF modules for Wi-Fi , 4G LTE or 5G NR such as WP-WIFI6, P-LTEAP18-GL, P-5GS6-GL. These modules have RF connectors spaced close together, and while it is mechanically possible to install four or five antennas directly attached, this will result in significant degradation to RF performance of antennas due to mutual de-tuning between closely spaced antennas. It is strongly recommended to install antennas away from the chassis in modular cases.
- If installing an antenna indoors, consider that the density and electromagnetic properties of the materials used in the building construction determines the number of walls the signal can pass through and still maintain adequate coverage.
    - Paper and vinyl walls have very little effect on signal penetration.
    - Solid and pre-cast concrete walls limit signal penetration to one or two walls without degrading coverage.
    - Concrete and wood block walls limit signal penetration to three or four walls.
    - A signal can penetrate five or six walls constructed of drywall or wood.
    - A thick metal wall causes signals to reflect off, causing poor penetration.
    - A chain link fence or wire mesh spaced between 1 and 1 1/2 in. (2.5 and 3.8 cm) acts as a harmonic reflector that blocks a 2.4-GHz radio signal.
    - Install the antenna away from microwave ovens and 2-GHz cordless phones. These products can cause signal interference because they operate in the same frequency range as the device your antenna is connected to.

Antenna Installation

This section covers the following topics:

Installation Notes

This Cisco Multi-purpose Integrated Antenna is designed to be mounted directly onto the router.

In addition to antenna orientation, wireless access point installation location with respect to all wireless clients plays a significant role in determining overall network performance.

Because antennas transmit and receive radio signals, their performance can be adversely affected by the surrounding environment including distance between the Field Area Router (FAR) and cellular base station, physical obstructions, or radio frequency (RF) interference.

Tools and Equipment Required

In addition to the parts included in the antenna kit described in the previous section, you must provide the following tool to install the antenna on the router:

- Strap wrench
- 13 mm socket wrench

Install the Antenna onto the CGR 1240 Router

Follow these steps to install the antenna onto the router:

Step 1 Remove the plug on the antenna connector if one is present.

Step 2 Attach the monopole antenna to your desired antenna port. Do not tighten the antenna completely—stop tightening so that the antenna is not fully installed.

Figure 327: Insert Base of Antenna into Router Antenna Port

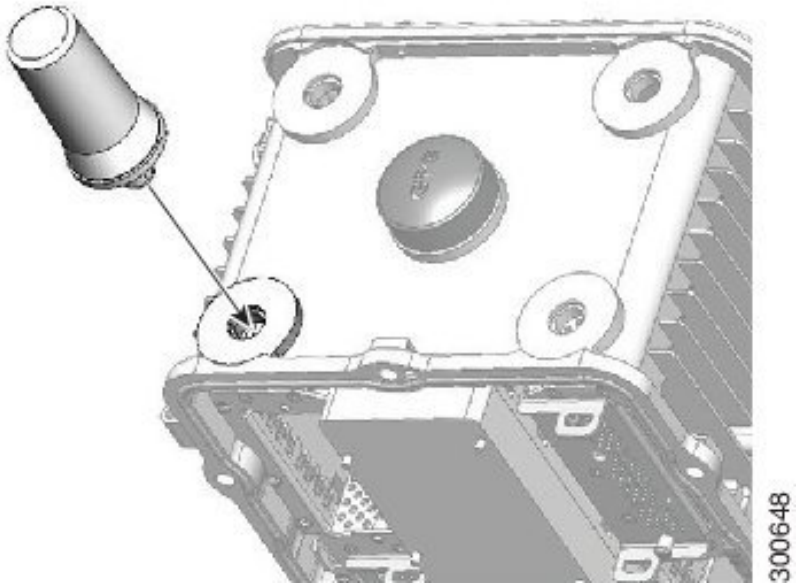

Step 3 From the chassis interior, the antenna MCX jack should be visible in the plug. With one hand, position the right-angle end of the antenna cable to the antenna's MCX jack. With your other hand, push the cable end so it inserts into the MCX jack of the antenna.

Figure 328: Installation Details

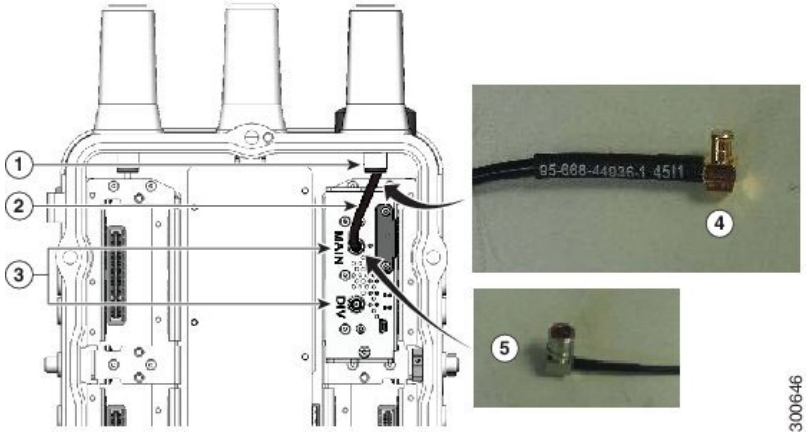

1	Antenna base
2	Antenna-to-router coaxial antenna cable (with QMA-male connector)
3	Connected Grid module coaxial connectors (QMA-female)
4	MCX end
5	QMA end

Step 4 From the exterior of the router, tighten the antenna using the torque wrench. Tighten to 6 to 7 ft-lbs.

Step 5 From the interior of the router, install the coaxial end of the cable to the appropriate connector on your installed module. The antenna and module ports should be the same color (red, yellow, or green).

Note Some modules require two antennas: a main antenna and a diversity antenna. These modules have two antenna connectors on the front panel, labeled MAIN and DIV. Be sure to connect the main and diversity antennas to the correct module connectors.

Communications, Services, and Additional Information

- To receive timely, relevant information from Cisco, sign up at Cisco Profile Manager.
- To get the business impact you're looking for with the technologies that matter, visit Cisco Services.
- To submit a service request, visit Cisco Support.
- To discover and browse secure, validated enterprise-class apps, products, solutions, and services, visit Cisco DevNet.
- To obtain general networking, training, and certification titles, visit Cisco Press.
- To find warranty information for a specific product or product family, access Cisco Warranty Finder.

Cisco Bug Search Tool

Cisco Bug Search Tool (BST) is a web-based tool that acts as a gateway to the Cisco bug tracking system that maintains a comprehensive list of defects and vulnerabilities in Cisco products and software. BST provides you with detailed defect information about your products and software.

Documentation Feedback

To provide feedback about Cisco technical documentation, use the feedback form available in the right pane of every online document.

Cisco Support Community

Cisco Support Community is a forum for you to ask and answer questions, share suggestions, and collaborate with your peers. Join the forum at https://supportforums.cisco.com/index.jspa.

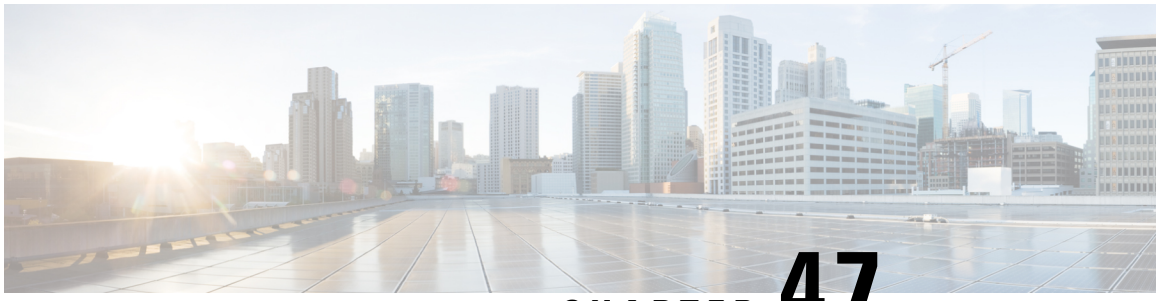

CHAPTER 47

Cisco Vandal Resistant Omni-directional Dome Antenna for 860-928 MHz ISM, WPAN and LoRaWAN (ANT-UN-MP-OUT-QMA)

This chapter contains the following:

- Overview, on page 779
- Technical Specifications, on page 779
- Antenna Radiation Patterns, on page 784
- General Safety Precautions, on page 787
- Guidelines to Achieving Optimal RF and Antenna Performance, on page 789
- Antenna Installation, on page 792
- Communications, Services, and Additional Information, on page 795

Overview

This document describes the Vandal Resistant Omni-directional Dome Antenna for 860-928 MHz ISM, WPAN and LoRaWAN routers. In addition, this document provides the antenna specifications and mounting instructions for the antenna.

Caution Read the information in the Safety Warnings before installing or replacing antennas.

Technical Specifications

This section covers the following topics:

Figure 329: Vandal Resistant Omni-directional Dome Antenna



Specifications

The following tables provide the Mechanical, Environmental, and Other Specifications.

Note While many antenna datasheets emphasize peak gain, in most outdoor applications gain at horizon is much more important. For low profile antennas from any vendor, it is important to evaluate gain at horizon prior to selecting the antenna for deployment.

Table 72: RF Specifications 863-876 MHz ETSI

Specification	Description	
(See **Note 1**)	No Ground Plane	With 2 foot diameter Ground Plane
Peak Gain (dBi) Typical(See **Note 2**)	+1.7	+3
Gain on Horizon (dBi) Average	+0.1	-1.2
Gain on Horizon (dBi) Minimum(See **Note 3**)	-2.0	-2.0
Efficiency	65%	76%
VSWR (Worst Case)	1.7:1	1.2:1
Elevation 3 dB Beamwidth (HPBW), degrees	65	66
Azimuth 3 dB Beamwidth (HPBW), degrees	360	
Nominal Impedance, ohms	50 ohms	
Polarization	Vertical	
RF Cable Length (ft)	5 foot (See **Note 4**)	
RF Connector	QMA (male), right angle	
Max RF Power (at 25°C), Watts	10 Watts	

Table 73: RF Specifications 902-928 MHz ISM

Specification	Decription	
(See **Note 1**)	No Ground Plane	With 2 foot diameter Ground Plane
Peak Gain (dBi) Typical(See **Note 2**)	+1.5	+1.9
Gain on Horizon (dBi) Average	+0.6	-1.4
Gain on Horizon (dBi) Minimum(See **Note 3**)	-2.0	-3.5
Efficiency	67%	69%
VSWR (Worst Case)	1.5:1	1.5:1
Elevation 3 dB Beamwidth (HPBW), degrees	75	72

Specification	Decription
Azimuth 3 dB Beamwidth (HPBW), degrees	360
Nominal Impedance, ohms	50 ohms
Polarization	Vertical
RF Cable Length (ft)	5 foot (See **Note 4**)
RF Connector	QMA (male), right angle
Max RF Power (at 25°C), Watts	10 Watts

Note 1: Antenna has been designed and tested to have excellent performance with and without a ground plane over the full 860-928 MHz frequency range. It can be installed on a metallic or non-metallic surface. RF parameters in the table are provided for both cases of ground plane vs no ground plane.

Note 2: Peak gain of monopole antennas installed on a finite size ground plane will not be at horizon, and will be elevated above the horizon. In contrast, typical terrestrial radio deployments with omni-directional antennas involve communications near the horizon. Therefore, in the most common deployment scenarios the gain at horizon is a more useful parameter than peak gain.

Note 3: The minimum horizon gain specification shows whether an antenna has radiation nulls in azimuth. Nulls are directions in which the antenna has poor gain (e.g. -6 dBI, -10 dBI, -20 dBI or worse), and nulls often result in severe transmit and receive signal loss in the direction of the null. The ANT-UN-MP-OUT-QMA antenna has a smooth horizon or azimuth radiation pattern, and does not have azimuth pattern nulls. When evaluating omni-directional antennas, it is important to ensure that the antenna pattern does not have nulls in azimuth, to ensure good transmission and reception signal quality in all directions at horizon.

Note 4: All provided RF specifications include the RF loss of the integrated 5 foot cable.

Table 74: Mechanical, Environmental, and Other Specifications

Specification	Description
Anti-Static Protection	DC Grounded(See **Note 1**)
Antenna Dimensions (Diameter x Height), mm, inch	147mm x 47mm, 5.8"x1.85"
Weight, kg (lbs)	0.6kg (1.35 lb)
Antenna Radome Color	Electrical utility box green color
UV resistance	UV resistant, UV stable material
Wind Operational & Survival	150mph minimum
Operating Temperature	-40 to +70C (-40 to +158F)
Storage Temperature	-40 to +85C (-40 to +185F)
Ingression Protection	IP67 when properly mounted to a flat surface
Material Substance Compliance	ROHS

Specification	Description
Impact Resistance	Higher than IK10 or IK10+
Environmental Testing	Antenna passed extensive environmental and mechanical tests appropriate for deployment on an outdoor electrical utility box.

Note 1: Antenna data sheets often claim lightning protection, while in reality only providing a DC ground path for ESD protection. Cisco recommends use of a dedicated, high quality lightning arrestor for all antennas potentially exposed to lightning strikes.

Vandal Resistance

Antenna has been specifically designed to withstand opportunistic direct impacts from all angles, from more commonly carried vandalism objects or tools, such as aluminum or wooden baseball bats, skateboards, scooters, small knives and similar objects, assuming proper installation of the antenna on a flat surface.

Antenna is not resistant to damage caused by intentional or unintentional tampering with professional tools used in isolation or in combination, such as long (e.g. 40") steel crowbars or pry bars, power drills, welding torches, axes, chainsaws, heavy duty sledge hammers and similar.

Additionally, while the antenna is resistant to occasional, opportunistic, impulsive vandalism with common items - it should be understood that a persistent, skilled and focused individual with the right common tools and given enough time will be able to damage or tamper with the antenna.

Dimensions

The following graphic shows the Antenna Dimensions.

Figure 330: Dimensions

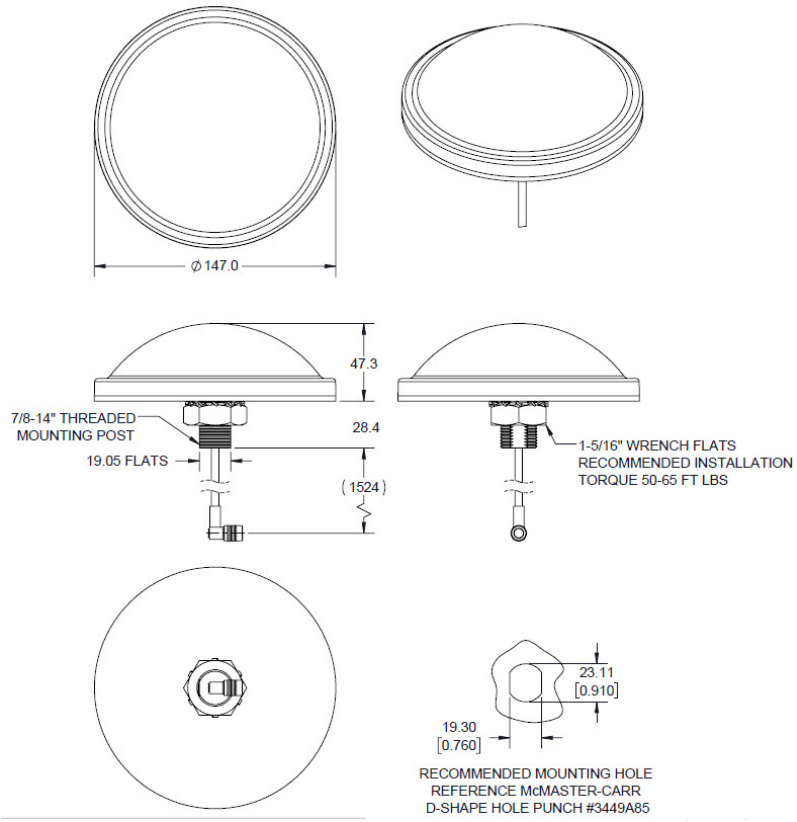

Note Antenna Dimensions are shown in millimeters, except where explicitly specified in inches denoted by " or [ ].

Antenna Radiation Patterns

The following sequence of illustrations show the different antenna radiation patterns.

Note The pattern plots that follow show measurements for two different samples of the antenna, labeled S1 (Sample 1) and S2 (Sample 2).

Figure 331: 863 MHz Radiation Pattern - No Ground Plane

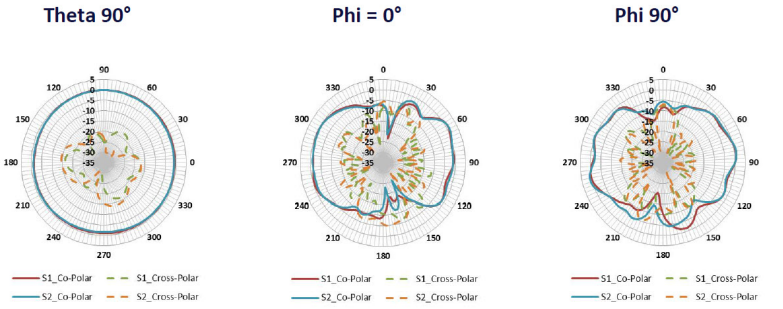

Figure 332: 863 MHz Radiation Pattern - With Ground Plane

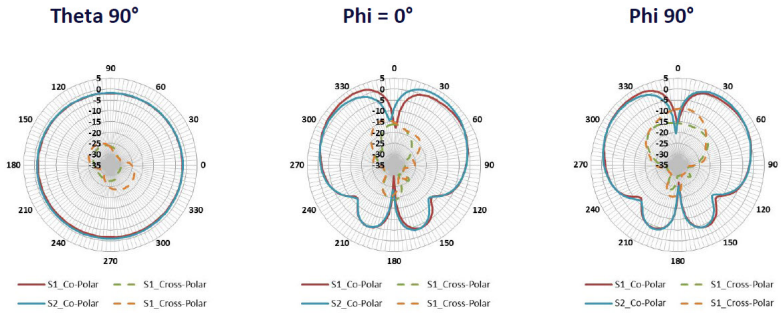

Figure 333: 876 MHz Radiation Pattern -No Ground Plane

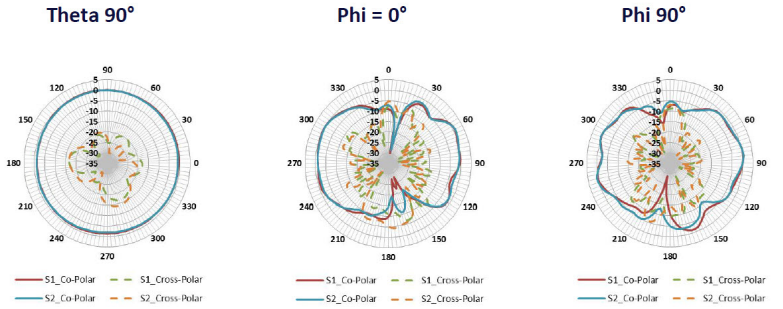

Figure 334: 876 MHz Radiation Pattern -With Ground Plane

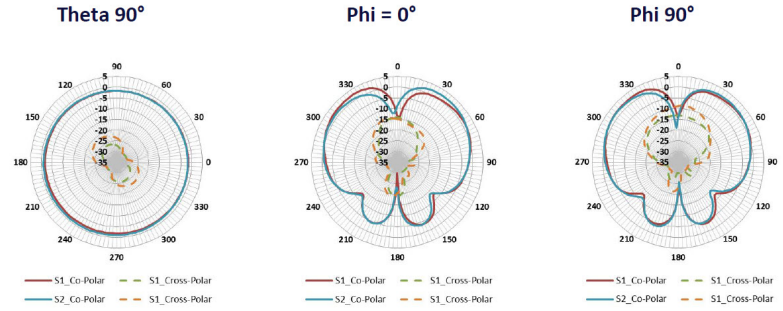

Figure 335: 902 MHz Radiation Pattern - No Ground Plane

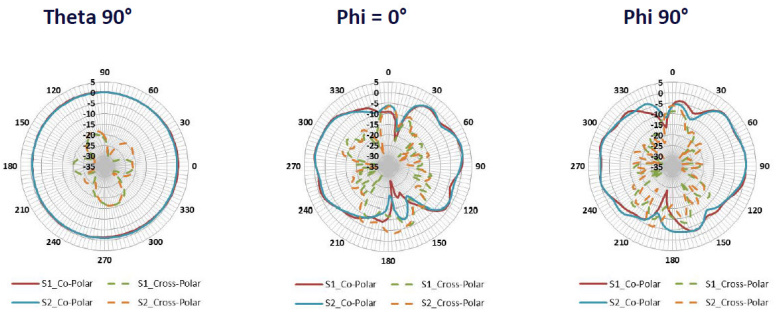

Figure 336: 902 MHz Radiation Pattern - With Ground Plane

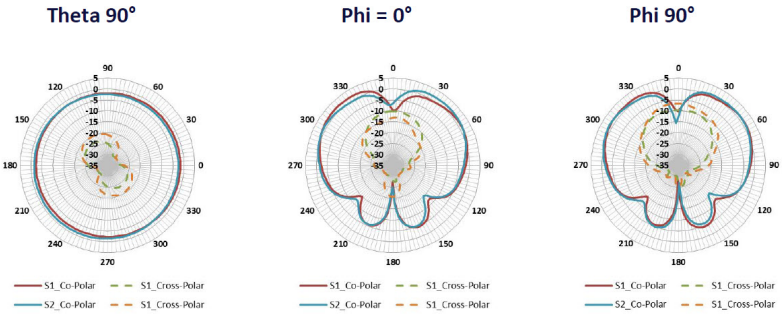

Figure 337: 915 MHz Radiation Pattern - No Ground Plane

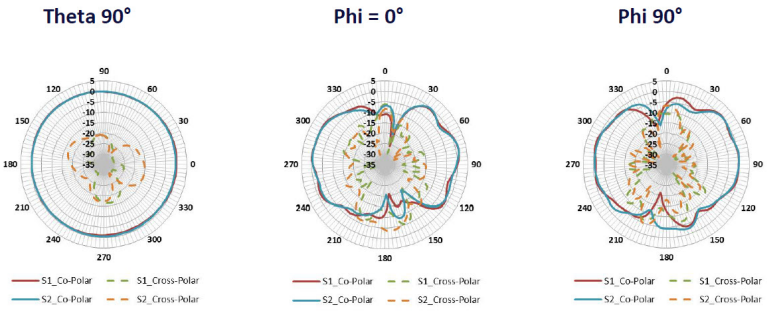

Figure 338: 915 MHz Radiation Pattern - With Ground Plane

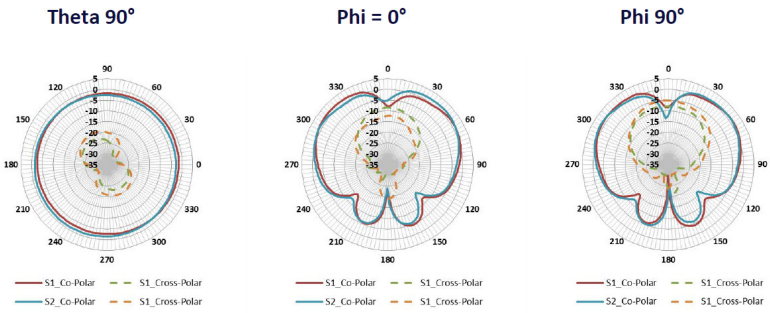

Figure 339: 928 MHz Radiation Pattern - No Ground Plane

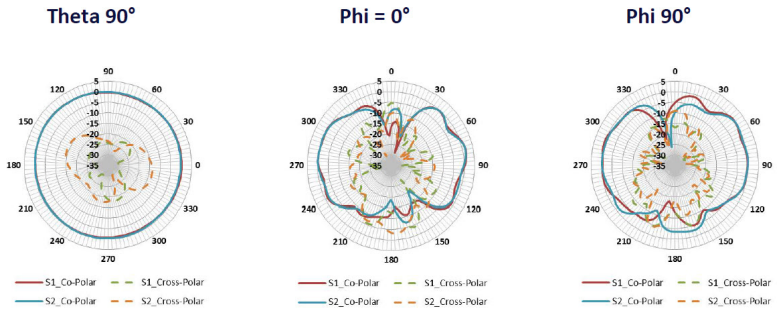

Figure 340: 928 MHz Radiation Pattern - With Ground Plane

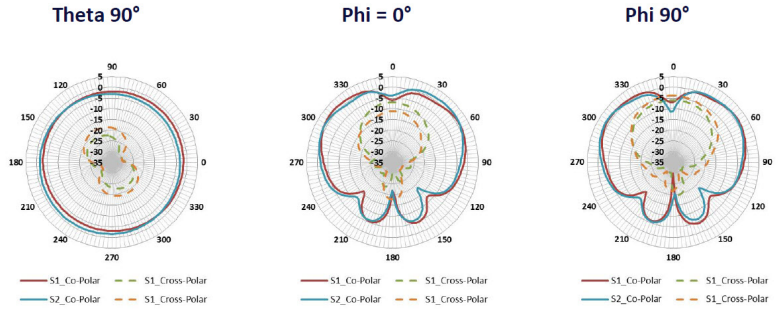

General Safety Precautions

Warning This warning symbol means danger. You are in a situation that could cause bodily injury. Before you work on any equipment, be aware of the hazards involved with electrical circuitry and be familiar with standard practices for preventing accidents. Use the statement number provided at the end of each warning to locate its translation in the translated safety warnings that accompanied this device. **Statement 1071**

Warning Do not work on the system or connect or disconnect cables during periods of lightning activity. **Statement 1001**

Warning Do not locate the outdoor antenna near overhead power lines or other electric light or power circuits, or where it can come into contact with such circuits. When installing the antenna, take extreme care not to come into contact with such circuits, as they may cause serious injury or death. For proper installation and grounding of the antenna, please refer to national and local codes (for example, U.S.:NFPA 70, National Electrical Code, Article 810, Canada:Canadian Electrical Code, Section 54). **Statement 1052**

Warning In order to comply with FCC radio frequency (RF) exposure limits, antennas should be located at a minimum of 7.9 inches (20 cm) or more from the body of all persons. **Statement 332**

Note For your safety, and to help you achieve a good installation, please read and follow these safety precautions.

Mast Mounted or Building Mounted Installations

The following instructions are common to most mast mounted or building mounted installations. For specific installation instructions for each antenna, see the antenna data-sheet and the router hardware installation guide.

- Find someone to help you—installing an antenna is often a two-person job.
- Select your installation site with safety, as well as performance, in mind. Remember that electric power lines and phone lines look alike. For your safety, assume that any overhead line can kill you.
- Contact your electric power company. Tell them your plans and ask them to come look at your proposed installation.
- Do not use a metal ladder.
- Do not work on a wet or windy day.
- Do dress properly—wear shoes with rubber soles and heels, rubber gloves, and a long-sleeved shirt or jacket.
- If the assembly starts to drop, move away from it and let it fall. Because the antenna, mast, cable, and metal guy wires are all excellent conductors of electrical current, even the slightest touch of any of these parts to a power line completes an electrical path through the antenna and the installer.
- If any part of the antenna system should come in contact with a power line, do not touch it or try to remove it yourself. Call your local power company to have it removed safely.
- If an accident should occur with the power lines, call for qualified emergency help immediately.
- Assemble your new antenna on the ground or a level surface at the installation site.
- Connect its coaxial cable while you are on the ground and attach the antenna to the mast.
- Ensure that the mast does not fall as you raise or remove it. Use a durable non-conductive rope secured at each two foot level as the mast is raised. Have an assistant tend the rope, ready to pull the mast clear of any hazards (such as power lines) should it begin to fall.
- Use the mounting bracket provided with the antenna.
- If the installation will use guy wires:
    - Install guy anchor bolts.
    - Estimate the length of guy wire and cut it before raising the mast.
    - Attach guy wires to a mast using guy rings.
    - In the case of a guyed (tall, thin mast) installation, you must have at least one assistant to hold the mast upright while the guy wires are attached and tightened to the anchor bolts.

- Attach a “DANGER” label at eye level on the mast.
- Install ground rods to remove any static electricity buildup and connect a ground wire to the mast and ground rod. Use ground rods designed for that purpose, not a spare piece of pipe.

Unused Antenna Ports

Port plugs must be installed in any unused antenna ports.

The weatherproof caps on the connectors protect the router interior from environmental elements including water, heat, cold, and dust. They are installed on unused ports before the router is shipped.

When you install a new antenna in a port with an N-connector:

- Chassis-mounted antennas—Remove the weather proof cap before installing a chassis-mounted antenna.
- External antennas—Remove weatherproof cap, then connect the supported Cisco cable to the connector.

Guidelines to Achieving Optimal RF and Antenna Performance

Antennas are a critical component of a wireless communication system. Selecting a suitable antenna, an optimal antenna location, or antenna site is essential for optimum performance of a wireless links.

This section covers general tips for optimizing RF performance of indoor and outdoor terrestrial radio systems in the 400-7125 MHz frequency range. Examples of terrestrial radio systems include 4G LTE, 5G NR, Wi-Fi, LoRa, LR-WPAN and similar. In this context GPS SPS would not be considered a terrestrial system as the signal is received from space, not from another terrestrial site.

Because the antenna transmits and receives radio signals over the air, overall RF performance of the link is susceptible to RF obstructions and common sources of RF interference that can reduce throughput and range of the system.

Follow these guidelines to optimize performance. When in doubt, consult a qualified RF professional, and check with your solution partner for specific recommendations.

Antenna Model Selection and Performance

Consider the following when planning your installation:

- When selecting the antenna, ensure that it covers the frequency ranges or frequency bands of interest, and that it has good RF parameters such as antenna efficiency, VSWR and suitable radiation pattern for every frequency range that your application will use with this antenna.
- Antenna pattern is important. Omni-directional antennas have lower gain, but allow communicating to devices in all azimuth directions. Directional antennas concentrate the beam in a specific direction, making them ideal for point to point communication.
- When a system has multiple RF ports for receive and / or transmit, as is the case for 4G LTE , 5G NR or Wi-Fi, it is highly recommended to populate all the RF ports with suitable antennas to take advantage of MIMO, rather than rely on a single port or single antenna to save on cost. Please see the MIMO section for a detailed description of MIMO benefits.
- For RF systems that support multiple RF ports and multiple RF standards such as LTE, Wi-Fi, and GPS: consider using a multi-element antenna that integrates multiple antennas under the same radome (cover).

Doing so may reduce cost compared to deploying and mounting a discrete single port antenna for every RF port.

- For communication between fixed infrastructure devices, such as mesh nodes or a point-to-point backhaul link, each device should have an antenna with the same polarization. If communicating with mobile devices that might be randomly oriented, consider dual-polarized antennas, such as those with both vertical and horizontal or slant +45° and -45° polarized elements.

Antenna Environmental Specifications

The selected antenna must have suitable mechanical and environmental specifications for the environment where it will be deployed. For example, shock and vibration specifications for transportation, corrosion resistant construction for marine and oil and gas industries, or IP (ingress protection) rating for outdoor deployment. Indoor antennas are typically not suitable for harsh industrial environments. Please check with your system integrator for environmental requirements for your application.

Antenna Accessories and Mounting

Consider the following when planning your installation:

- Carefully consider what type of other RF accessories, besides antenna, such as RF cables, lightning arrestors or RF adapters may be required in your installations. It is best to minimize long RF cable runs due to RF signal losses in the cable. Thinner RF cables have more RF loss , thicker cables are less flexible and more expensive.
- Carefully consider how the antenna will be physically mounted, as this may affect antenna selection. For example, a stud mount mechanical mounting design is a better fit for mounting on top of an electrical cabinet than a mast mount antenna.
- For outdoor deployments, follow installation instructions for the antenna. It is good practice to keep protective covers on the radio's RF ports and any antenna or accessory RF ports until the moment the interfaces are mated. This reduces chances of contamination, trapping water or condensation inside the connector, or accidental damage to RF interfaces.

MIMO Performance and Arrays

MIMO systems deliver benefits of higher SNR, higher reliability and higher throughput compared to single antenna systems. In more technical terms, MIMO delivers array gain, diversity gain and multiplexing gain compared to single antenna.

- Array gain — Improvement in SNR (signal to noise ratio) by coherently combining signals from multiple antennas. For example, increasing SNR through beamforming techniques.
- Diversity gain — Improvement in reliability by mitigating deep fading or strong destructive EM wave interference. For example, in a two-antenna system, if one antenna is experiencing deep fading due to an EM destructive null at its location at a given instant, the other antenna is unlikely to have a null at the same instant, and the combined SNR stays at a reliable level. In contrast, a single antenna would see SNR oscillating between good SNR and very poor SNR and reliability would degrade.
- Multiplexing gain — Increase in system capacity or throughput by sending independent data over multiple spatial streams simultaneously. The number of streams cannot be more than the number of antennas. For example, to support three spatial streams, a minimum of three antennas is required. Often there may be additional antennas for diversity or redundancy, such as in the case of 4x4:3, or 4x4 MIMO with 3 spatial streams.

If deploying multiple single-element antennas for a MIMO system in an array, ensure sufficient spacing between the antennas. Omnidirectional elements should generally be at least one wavelength apart at the lowest operating frequency.

Consider the following:

- For Wi-Fi systems operating in the 2.4, 5, and/or 6 GHz bands, space elements at least 5 inches (12.5 cm) apart.
- For 4G LTE and 5G systems with the lowest operating frequency of 617 MHz , space elements at least 20 inches (50 cm) apart.
- Note that spacing between elements inside multi-element MIMO antennas is often less than one wavelength. However multi-element antennas are engineered with MIMO performance in mind, by providing antenna diversity through pattern, polarization, and isolation between MIMO elements.

Antenna siting and location

Consider the following when planning your installation:

- Plan antenna location ahead of time. Ideal location for an antenna is in LOS (line of sight) of the counterpart that it is trying to communicate with. Under LOS conditions the signals propagate directly between the two communication nodes, without relying on signal bouncing off a wall or other structure to reach the counterpart. This is sometimes not possible to achieve in practice, but it is a useful goal to keep in mind when optimizing antenna location.
- While it is good to keep RF cables short, it is most desirable for an antenna to be in the best location it can be to provide the desired coverage.
- For large deployments involving multiple units communicating with each other across a complex urban or industrial landscape, consider running an RF propagation modeling study to predict approximate simulated coverage maps and determine initial placement of the units. A propagation study may help reduce overall deployment cost by discovering and mitigating issues with RF coverage before the infrastructure is physically installed.
- Keep the antenna away from metal obstructions such as heating and air-conditioning ducts, large ceiling trusses, building superstructures, and major power cabling runs. One exception is if the antenna is designed to be mounted on a ground plane. If mounting on a ground plane, mount the antenna on a flat metal surface away from adjacent obstructions.
- It is strongly recommended not to install antennas directly on the router or access point (AP), unless the router or AP is specifically engineered to directly mount the antennas. Products that are engineered for direct mounting of antennas specifically address each of the below issues.
- Reasons to mount antennas away from the router include:
    - Router location may not be optimal location for antenna to communicate with the counterpart wirelessly, so router and antenna may need to be in different locations.
    - Router may have a clutter of Ethernet cable and power cables around it, which will obstruct antenna signal.
    - A number of routers, such as the IR1835, are modular. They have plug-in RF modules for Wi-Fi , 4G LTE or 5G NR such as WP-WIFI6, P-LTEAP18-GL, P-5GS6-GL. These modules have RF connectors spaced close together, and while it is mechanically possible to install four or five antennas directly attached, this will result in significant degradation to RF performance of antennas due to

mutual de-tuning between closely spaced antennas. It is strongly recommended to install antennas away from the chassis in modular cases.

- If installing an antenna indoors, consider that the density and electromagnetic properties of the materials used in the building construction determines the number of walls the signal can pass through and still maintain adequate coverage.
  - Paper and vinyl walls have very little effect on signal penetration.
  - Solid and pre-cast concrete walls limit signal penetration to one or two walls without degrading coverage.
  - Concrete and wood block walls limit signal penetration to three or four walls.
  - A signal can penetrate five or six walls constructed of drywall or wood.
  - A thick metal wall causes signals to reflect off, causing poor penetration.
  - A chain link fence or wire mesh spaced between 1 and 1 1/2 in. (2.5 and 3.8 cm) acts as a harmonic reflector that blocks a 2.4-GHz radio signal.
  - Install the antenna away from microwave ovens and 2-GHz cordless phones. These products can cause signal interference because they operate in the same frequency range as the device your antenna is connected to.

Antenna Installation

The antenna installation includes the following procedures:

Tools and Equipment Required

In addition to the parts included in the antenna kit, you must provide the following tools to install the antenna on the router:

- 1-5/16" (1.3125"), or 33.34mm open-end wrench. Recommended torque is 50-65 ft-lb or 68-88 Nm.
- McMaster Carr Double-D Hole Punch P/N 3449A85 or equivalent. Alternatively, you can drill or use a circular hole punch to create a 0.91" diameter hole.

Mounting Components

Table 75: Antenna Mounting Components

Item Number	Description	Quantity
1	HEX NUT, THIN, 7/8-14, SS, PA	1
2	WASHER, EXT SERRATED, 7/8", SS, PA	1

Figure 341: Mounting Nut and Washer

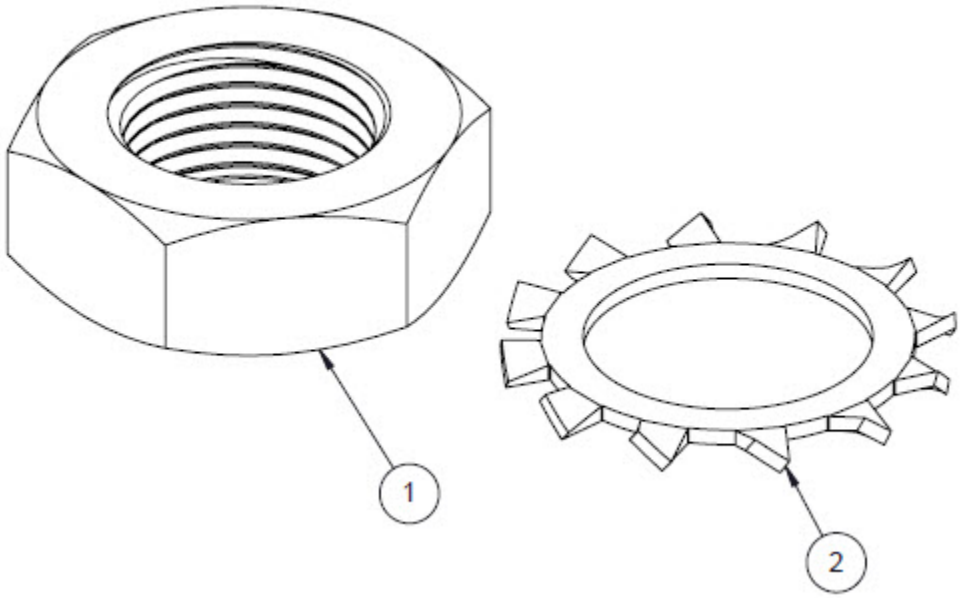

Mounting the Antenna

A clean, flat surface at least 15 x 15 cm (6 x 6 in.) in area is required for mounting the antenna. Antenna mounting stud has a Double-D cross-section compatible with the McMaster Carr Double-D Hole Punch P/N 3449A85. The Double-D prevents antenna from rotating while the mounting nut is torqued. It also provides additional vandal resistance by not allowing the antenna to rotate around the axis.

Follow these instructions to mount the antenna. See the following graphic for a conceptual mounting illustration.

1. Mark the desired location where you plan to mount the antenna, and create a hole through the surface using a McMaster Carr Double-D Hole Punch P/N 3449A85, or equivalent punch tool. Alternatively, it is possible to drill a circular hole 0.91" in diameter.
2. Thread the cables through the hole and insert the Double-D mounting stud into the hole. Ensure that the gasket on the underside of the antenna sits flush against the mounting surface.
3. Place the metal washer and the metal nut onto the stud. Tighten the nut to a torque of 50-65 ft-lb or 68-88 Nm.

The following graphic shows the vandal resistant antenna mounted to a matching color outdoor electrical utility enclosure of a simple rectangular box shape. Many outdoor enclosures come in much more complicated shapes, with a number of rectangular boxes and compartments joined together. In general, it is recommended that the antenna be installed on the highest surface of the electrical enclosure box. In this manner, the radiation in the upper hemisphere is not obstructed by other nearby geometrical features of the enclosure.

In many deployments the nodes need to communicate to other nodes located near horizon. Placing the antenna on the highest enclosure surface is a good way to ensure that horizon communication is not obstructed. If it is not possible or feasible to place the antenna on the highest surface of the enclosure, please contact your

Cisco account representative for support or 3rd party qualified RF (radio-frequency) professional with experience in antenna installation and siting.

Figure 342: Antenna Placement on Electrical Enclosures

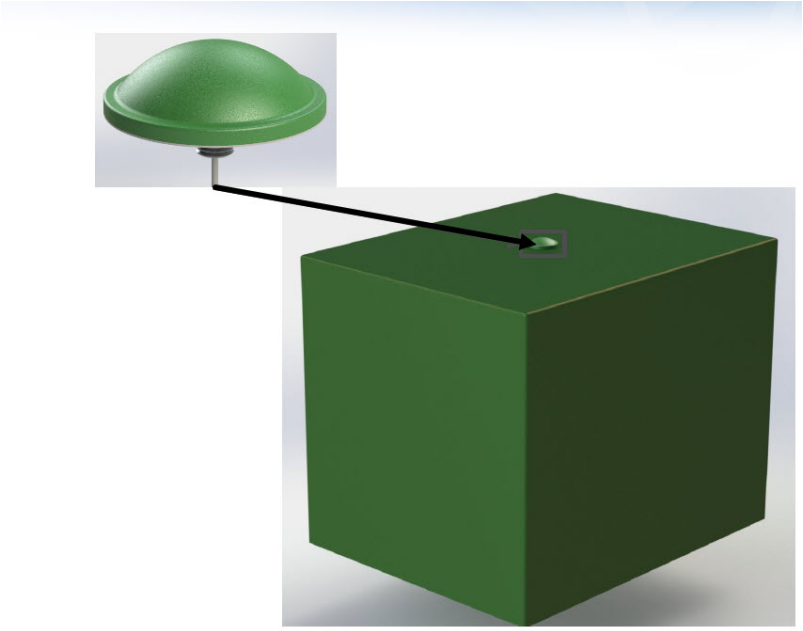

Using the McMaster Carr Stud Driven Hole Punch

This section describes the McMaster Carr Stud Driven Hole Punch for 0.76" Long, 0.91" Wide Double-D Shape. Information in this section is adapted by Cisco and published with written permission from McMaster Carr Supply Company. In duplicating the information Cisco seeks to achieve an antenna datasheet that is standalone, and seeks to ensure that if the 3449A85 McMaster product is changed or discontinued, a copy of the original information is available with the ANT-UN-MP-OUT-QMA antenna datasheet.

Note: Cisco is providing 3449A85 information for reference purposes only, and does not sell, distribute or provide technical support for the 3449A85 punch tool. For technical support and the most up to date information please contact McMaster Carr, and reference the information located in the McMaster Carr 3449A8 datasheet .

Also known as chassis punches, these tools cut through sheet metal to create holes for installing switches and instruments. They have an automatic centering design for accurate alignment. Drill pilot holes slightly larger than the size of the stud. All punches can be used with a manual wrench or hydraulic driver, but require a stud adapter (sold separately) when used with a hydraulic driver.

Figure 343: McMaster Carr Stud Driven Hole Punch



Table 76: Tool Details

Punching Action	Stud Driven
Shape	Double-D Shape
Hole Length	0.76"
Hole Width	0.91
Maximum Steel Thickness	1/16"
Tool Material	Steel
For Use On	Aluminum, Brass, Copper, Steel
Pilot Hole Required	Yes
Kit Includes	Punch, Die, Stud, Nut
Individual/Set	Individual
Related Products	Hydraulic Driver Stud Adapter 3449A172 11-Ton Straight Hydraulic Driver 3448A1 8-Ton Straight Hydraulic Driver 3484A15 8-Ton Right-Angle Hydraulic Driver 3490A21

Communications, Services, and Additional Information

- To receive timely, relevant information from Cisco, sign up at Cisco Profile Manager.
- To get the business impact you're looking for with the technologies that matter, visit Cisco Services.
- To submit a service request, visit Cisco Support.
- To discover and browse secure, validated enterprise-class apps, products, solutions, and services, visit Cisco DevNet.
- To obtain general networking, training, and certification titles, visit Cisco Press.

- To find warranty information for a specific product or product family, access Cisco Warranty Finder.

Cisco Bug Search Tool

Cisco Bug Search Tool (BST) is a web-based tool that acts as a gateway to the Cisco bug tracking system that maintains a comprehensive list of defects and vulnerabilities in Cisco products and software. BST provides you with detailed defect information about your products and software.

Documentation Feedback

To provide feedback about Cisco technical documentation, use the feedback form available in the right pane of every online document.

Cisco Support Community

Cisco Support Community is a forum for you to ask and answer questions, share suggestions, and collaborate with your peers. Join the forum at https://supportforums.cisco.com/index.jspa.

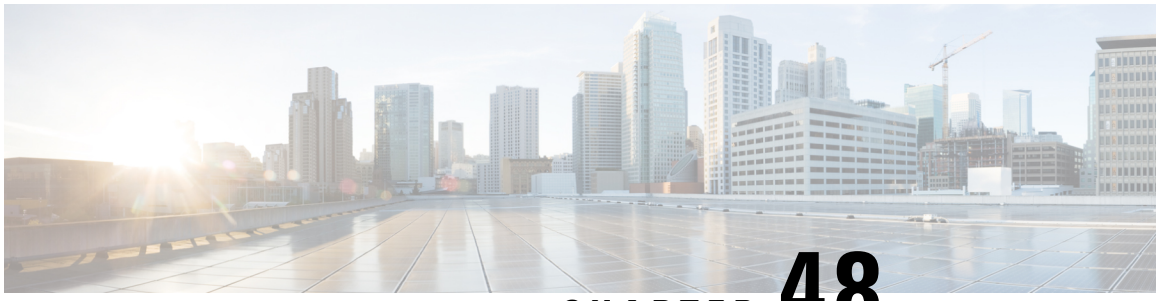

CHAPTER 48

Cisco WPAN Dipole Antenna (ANT-WPAN-OD-OUT-N)

This chapter contains the following:

- Overview, on page 797
- Antenna Features, on page 797
- Technical Specifications, on page 799
- General Safety Precautions, on page 801
- Guidelines to Achieving Optimal RF and Antenna Performance, on page 803
- Installing the Antenna, on page 806
- Communications, Services, and Additional Information, on page 807

Overview

This section describes the technical specifications and installation instructions for the Cisco WPAN dipole antenna. The antenna is a single-port antenna designed to cover the 863-928 MHz frequency bands for worldwide ISM operation.

Caution Read the information in Safety Warnings before installing or replacing antennas.

Antenna Features

The Cisco WPAN Dipole antenna (ANT-WPAN-OD-OUT-N) has the following features:

- 863 - 928 MHz support
- Omnidirectional, vertically polarized
- Indoor or outdoor location
- Direct chassis-mount installation
- Type N male connector

Figure 344: Cisco ANT-WPAN-OD-OUT-N Antenna

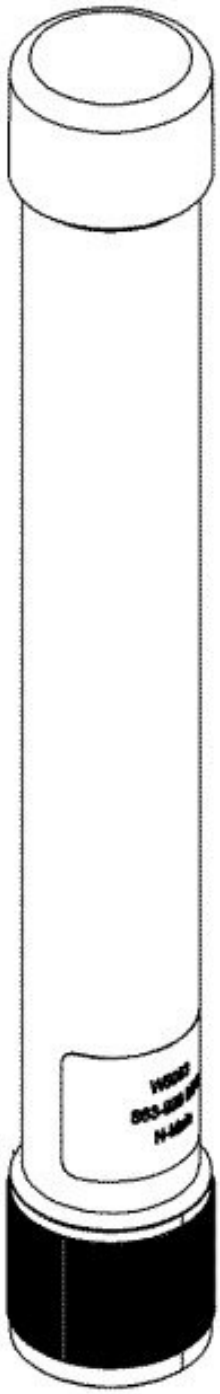

Technical Specifications

This section contains the following:

RF Specifications

The following are the Radio Frequency (RF) antenna specifications for the antenna:

Specification	Description
Antenna Type	Dipole
Operating frequency range	863 to 928 MHz
Nominal impedance	50 ohms
VSWR	2.0:1 maximum
Gain	1.5 dBi maximum
3 dB beamwidth (vertical plane)	84 degrees
3 dB beamwidth (horizontal plane)	360 degrees
Polarization	Linear, vertical
Radiation Pattern	Omnidirectional
Maximum input power	20 Watts

Radiation Patterns

The following diagrams illustrate the radiation patterns for the antenna:

Figure 345: Radiation Pattern — Vertical Plane

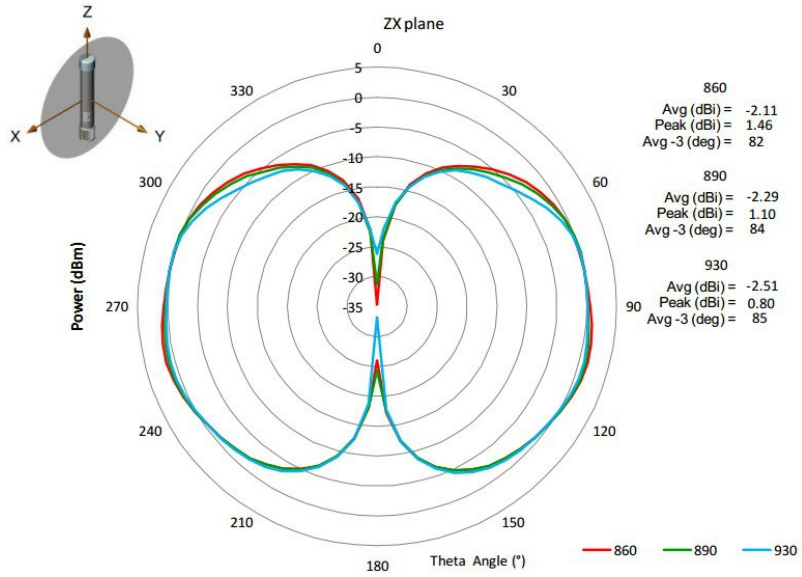

Figure 346: Radiation Pattern — Horizontal Plane

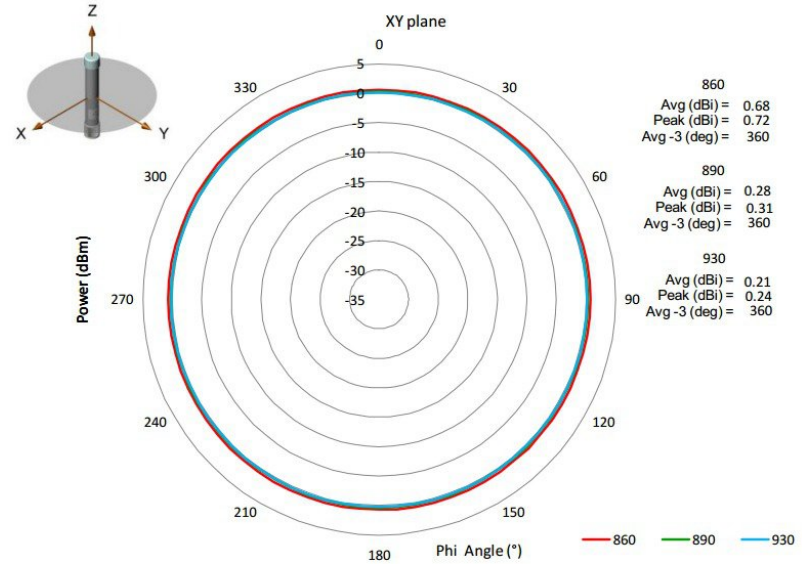

Environmental and Mechanical Specifications

The following are the Environmental and Mechanical Specifications for the Cisco ANT-WPAN-OD-OUT-N Antenna:

Specification	Description
Operating temperature range	-40 to 185°F (-40 to 85°C)
Mount style	Direct chassis or bulkhead mount

Specification	Description
Location	Outdoor
Connector	Type N male
Dimensions	7.70 in. length x 1.02 in. diameter (19.56 cm length x 2.60 cm diameter)
Weight	0.26 lbs (120 g)
Wind rating	265 km/hr (165 mph)
IP rating	IP67
Radome	Polyester/Fiberglass, UV resistant, white
Material substance compliance	RoHS compliant

General Safety Precautions

Warning This warning symbol means danger. You are in a situation that could cause bodily injury. Before you work on any equipment, be aware of the hazards involved with electrical circuitry and be familiar with standard practices for preventing accidents. Use the statement number provided at the end of each warning to locate its translation in the translated safety warnings that accompanied this device. **Statement 1071**

Warning Do not work on the system or connect or disconnect cables during periods of lightning activity. **Statement 1001**

Warning Do not locate the outdoor antenna near overhead power lines or other electric light or power circuits, or where it can come into contact with such circuits. When installing the antenna, take extreme care not to come into contact with such circuits, as they may cause serious injury or death. For proper installation and grounding of the antenna, please refer to national and local codes (for example, U.S.:NFPA 70, National Electrical Code, Article 810, Canada:Canadian Electrical Code, Section 54). **Statement 1052**

Warning In order to comply with FCC radio frequency (RF) exposure limits, antennas should be located at a minimum of 7.9 inches (20 cm) or more from the body of all persons. **Statement 332**

Note For your safety, and to help you achieve a good installation, please read and follow these safety precautions.

Mast Mounted or Building Mounted Installations

The following instructions are common to most mast mounted or building mounted installations. For specific installation instructions for each antenna, see the antenna data-sheet and the router hardware installation guide.

- Find someone to help you—installing an antenna is often a two-person job.
- Select your installation site with safety, as well as performance, in mind. Remember that electric power lines and phone lines look alike. For your safety, assume that any overhead line can kill you.
- Contact your electric power company. Tell them your plans and ask them to come look at your proposed installation.
- Do not use a metal ladder.
- Do not work on a wet or windy day.
- Do dress properly—wear shoes with rubber soles and heels, rubber gloves, and a long-sleeved shirt or jacket.
- If the assembly starts to drop, move away from it and let it fall. Because the antenna, mast, cable, and metal guy wires are all excellent conductors of electrical current, even the slightest touch of any of these parts to a power line completes an electrical path through the antenna and the installer.
- If any part of the antenna system should come in contact with a power line, do not touch it or try to remove it yourself. Call your local power company to have it removed safely.
- If an accident should occur with the power lines, call for qualified emergency help immediately.
- Assemble your new antenna on the ground or a level surface at the installation site.
- Connect its coaxial cable while you are on the ground and attach the antenna to the mast.
- Ensure that the mast does not fall as you raise or remove it. Use a durable non-conductive rope secured at each two foot level as the mast is raised. Have an assistant tend the rope, ready to pull the mast clear of any hazards (such as power lines) should it begin to fall.
- Use the mounting bracket provided with the antenna.
- If the installation will use guy wires:
    - Install guy anchor bolts.
    - Estimate the length of guy wire and cut it before raising the mast.
    - Attach guy wires to a mast using guy rings.
    - In the case of a guyed (tall, thin mast) installation, you must have at least one assistant to hold the mast upright while the guy wires are attached and tightened to the anchor bolts.
- Attach a “DANGER” label at eye level on the mast.
- Install ground rods to remove any static electricity buildup and connect a ground wire to the mast and ground rod. Use ground rods designed for that purpose, not a spare piece of pipe.

Unused Antenna Ports

Port plugs must be installed in any unused antenna ports.

The weatherproof caps on the connectors protect the router interior from environmental elements including water, heat, cold, and dust. They are installed on unused ports before the router is shipped.

When you install a new antenna in a port with an N-connector:

- Chassis-mounted antennas—Remove the weather proof cap before installing a chassis-mounted antenna.
- External antennas—Remove weatherproof cap, then connect the supported Cisco cable to the connector.

Guidelines to Achieving Optimal RF and Antenna Performance

Antennas are a critical component of a wireless communication system. Selecting a suitable antenna, an optimal antenna location, or antenna site is essential for optimum performance of a wireless links.

This section covers general tips for optimizing RF performance of indoor and outdoor terrestrial radio systems in the 400-7125 MHz frequency range. Examples of terrestrial radio systems include 4G LTE, 5G NR, Wi-Fi, LoRa, LR-WPAN and similar. In this context GPS SPS would not be considered a terrestrial system as the signal is received from space, not from another terrestrial site.

Because the antenna transmits and receives radio signals over the air, overall RF performance of the link is susceptible to RF obstructions and common sources of RF interference that can reduce throughput and range of the system.

Follow these guidelines to optimize performance. When in doubt, consult a qualified RF professional, and check with your solution partner for specific recommendations.

Antenna Model Selection and Performance

Consider the following when planning your installation:

- When selecting the antenna, ensure that it covers the frequency ranges or frequency bands of interest, and that it has good RF parameters such as antenna efficiency, VSWR and suitable radiation pattern for every frequency range that your application will use with this antenna.
- Antenna pattern is important. Omni-directional antennas have lower gain, but allow communicating to devices in all azimuth directions. Directional antennas concentrate the beam in a specific direction, making them ideal for point to point communication.
- When a system has multiple RF ports for receive and / or transmit, as is the case for 4G LTE , 5G NR or Wi-Fi, it is highly recommended to populate all the RF ports with suitable antennas to take advantage of MIMO, rather than rely on a single port or single antenna to save on cost. Please see the MIMO section for a detailed description of MIMO benefits.
- For RF systems that support multiple RF ports and multiple RF standards such as LTE, Wi-Fi, and GPS: consider using a multi-element antenna that integrates multiple antennas under the same radome (cover). Doing so may reduce cost compared to deploying and mounting a discrete single port antenna for every RF port.
- For communication between fixed infrastructure devices, such as mesh nodes or a point-to-point backhaul link, each device should have an antenna with the same polarization. If communicating with mobile

devices that might be randomly oriented, consider dual-polarized antennas, such as those with both vertical and horizontal or slant +45° and -45° polarized elements.

Antenna Environmental Specifications

The selected antenna must have suitable mechanical and environmental specifications for the environment where it will be deployed. For example, shock and vibration specifications for transportation, corrosion resistant construction for marine and oil and gas industries, or IP (ingress protection) rating for outdoor deployment. Indoor antennas are typically not suitable for harsh industrial environments. Please check with your system integrator for environmental requirements for your application.

Antenna Accessories and Mounting

Consider the following when planning your installation:

- Carefully consider what type of other RF accessories, besides antenna, such as RF cables, lightning arrestors or RF adapters may be required in your installations. It is best to minimize long RF cable runs due to RF signal losses in the cable. Thinner RF cables have more RF loss , thicker cables are less flexible and more expensive.
- Carefully consider how the antenna will be physically mounted, as this may affect antenna selection. For example, a stud mount mechanical mounting design is a better fit for mounting on top of an electrical cabinet than a mast mount antenna.
- For outdoor deployments, follow installation instructions for the antenna. It is good practice to keep protective covers on the radio's RF ports and any antenna or accessory RF ports until the moment the interfaces are mated. This reduces chances of contamination, trapping water or condensation inside the connector, or accidental damage to RF interfaces.

MIMO Performance and Arrays

MIMO systems deliver benefits of higher SNR, higher reliability and higher throughput compared to single antenna systems. In more technical terms, MIMO delivers array gain, diversity gain and multiplexing gain compared to single antenna.

- Array gain — Improvement in SNR (signal to noise ratio) by coherently combining signals from multiple antennas. For example, increasing SNR through beamforming techniques.
- Diversity gain — Improvement in reliability by mitigating deep fading or strong destructive EM wave interference. For example, in a two-antenna system, if one antenna is experiencing deep fading due to an EM destructive null at its location at a given instant, the other antenna is unlikely to have a null at the same instant, and the combined SNR stays at a reliable level. In contrast, a single antenna would see SNR oscillating between good SNR and very poor SNR and reliability would degrade.
- Multiplexing gain — Increase in system capacity or throughput by sending independent data over multiple spatial streams simultaneously. The number of streams cannot be more than the number of antennas. For example, to support three spatial streams, a minimum of three antennas is required. Often there may be additional antennas for diversity or redundancy, such as in the case of 4x4:3, or 4x4 MIMO with 3 spatial streams.

If deploying multiple single-element antennas for a MIMO system in an array, ensure sufficient spacing between the antennas. Omnidirectional elements should generally be at least one wavelength apart at the lowest operating frequency.

Consider the following:

- For Wi-Fi systems operating in the 2.4, 5, and/or 6 GHz bands, space elements at least 5 inches (12.5 cm) apart.
- For 4G LTE and 5G systems with the lowest operating frequency of 617 MHz , space elements at least 20 inches (50 cm) apart.
- Note that spacing between elements inside multi-element MIMO antennas is often less than one wavelength. However multi-element antennas are engineered with MIMO performance in mind, by providing antenna diversity through pattern, polarization, and isolation between MIMO elements.

Antenna siting and location

Consider the following when planning your installation:

- Plan antenna location ahead of time. Ideal location for an antenna is in LOS (line of sight) of the counterpart that it is trying to communicate with. Under LOS conditions the signals propagate directly between the two communication nodes, without relying on signal bouncing off a wall or other structure to reach the counterpart. This is sometimes not possible to achieve in practice, but it is a useful goal to keep in mind when optimizing antenna location.
- While it is good to keep RF cables short, it is most desirable for an antenna to be in the best location it can be to provide the desired coverage.
- For large deployments involving multiple units communicating with each other across a complex urban or industrial landscape, consider running an RF propagation modeling study to predict approximate simulated coverage maps and determine initial placement of the units. A propagation study may help reduce overall deployment cost by discovering and mitigating issues with RF coverage before the infrastructure is physically installed.
- Keep the antenna away from metal obstructions such as heating and air-conditioning ducts, large ceiling trusses, building superstructures, and major power cabling runs. One exception is if the antenna is designed to be mounted on a ground plane. If mounting on a ground plane, mount the antenna on a flat metal surface away from adjacent obstructions.
- It is strongly recommended not to install antennas directly on the router or access point (AP), unless the router or AP is specifically engineered to directly mount the antennas. Products that are engineered for direct mounting of antennas specifically address each of the below issues.
- Reasons to mount antennas away from the router include:
    - Router location may not be optimal location for antenna to communicate with the counterpart wirelessly, so router and antenna may need to be in different locations.
    - Router may have a clutter of Ethernet cable and power cables around it, which will obstruct antenna signal.
    - A number of routers, such as the IR1835, are modular. They have plug-in RF modules for Wi-Fi , 4G LTE or 5G NR such as WP-WIFI6, P-LTEAP18-GL, P-5GS6-GL. These modules have RF connectors spaced close together, and while it is mechanically possible to install four or five antennas directly attached, this will result in significant degradation to RF performance of antennas due to mutual de-tuning between closely spaced antennas. It is strongly recommended to install antennas away from the chassis in modular cases.

- If installing an antenna indoors, consider that the density and electromagnetic properties of the materials used in the building construction determines the number of walls the signal can pass through and still maintain adequate coverage.
  - Paper and vinyl walls have very little effect on signal penetration.
  - Solid and pre-cast concrete walls limit signal penetration to one or two walls without degrading coverage.
  - Concrete and wood block walls limit signal penetration to three or four walls.
  - A signal can penetrate five or six walls constructed of drywall or wood.
  - A thick metal wall causes signals to reflect off, causing poor penetration.
  - A chain link fence or wire mesh spaced between 1 and 1 1/2 in. (2.5 and 3.8 cm) acts as a harmonic reflector that blocks a 2.4-GHz radio signal.
  - Install the antenna away from microwave ovens and 2-GHz cordless phones. These products can cause signal interference because they operate in the same frequency range as the device your antenna is connected to.

Installing the Antenna

This section contains the following:

Contents of the Antenna Kit

The antenna kit contains:

- 1 x Cisco ANT-WPAN-OD-OUT-N Antenna

Tools and Equipment Required

No tools are required to install the antenna. This does not include the tools and equipment required to install the router or to assemble the tower, mast, or other structure you intend to mount the router and antenna on.

Mounting the Antenna

Follow these instructions to mount the antenna.

- If installing the antenna on an IR529UWP-915S/K9 or IR529UBWP-915S/K9, screw the antenna's N male connector onto the N female connector on the chassis. Ensure that the connection is tight. See Single Antenna Advanced Range Extender—Direct Connect Antenna Configuration in the Cisco IR500 Series WPAN Gateway and WPAN Range Extender Installation and Configuration Guide.
- If installing the antenna to a bulkhead adapter or lightning arrestor, install the lightning arrestor or adapter to the side of the enclosure first, then screw the antenna onto the N female connector of the lightning arrestor or adapter. See Gateway Enclosure Mounted Antenna Configuration in the Cisco IR500 Series WPAN Gateway and WPAN Range Extender Installation and Configuration Guide.

Note Coaxial cable loses efficiency as the frequency increases, resulting in signal loss. If a cable is used it should be kept as short as possible because cable length also determines the amount of signal loss—the longer the cable length or run, the greater the loss.

Communications, Services, and Additional Information

- To receive timely, relevant information from Cisco, sign up at Cisco Profile Manager.
- To get the business impact you're looking for with the technologies that matter, visit Cisco Services.
- To submit a service request, visit Cisco Support.
- To discover and browse secure, validated enterprise-class apps, products, solutions, and services, visit Cisco DevNet.
- To obtain general networking, training, and certification titles, visit Cisco Press.
- To find warranty information for a specific product or product family, access Cisco Warranty Finder.

Cisco Bug Search Tool

Cisco Bug Search Tool (BST) is a web-based tool that acts as a gateway to the Cisco bug tracking system that maintains a comprehensive list of defects and vulnerabilities in Cisco products and software. BST provides you with detailed defect information about your products and software.

Documentation Feedback

To provide feedback about Cisco technical documentation, use the feedback form available in the right pane of every online document.

Cisco Support Community

Cisco Support Community is a forum for you to ask and answer questions, share suggestions, and collaborate with your peers. Join the forum at https://supportforums.cisco.com/index.jspa.

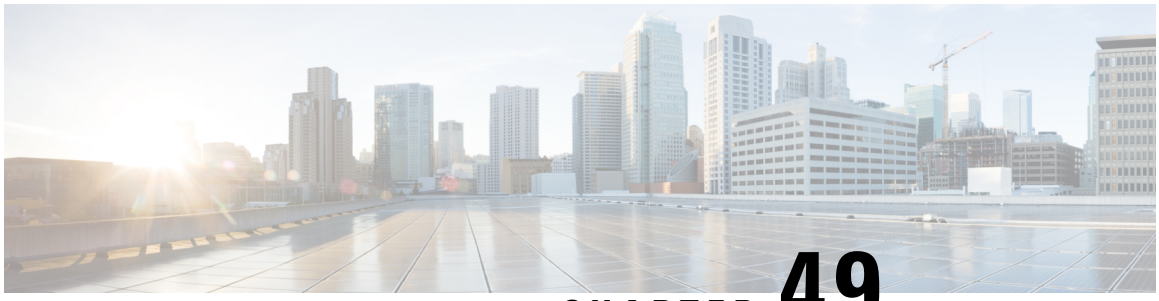

CHAPTER 49

Cisco Outdoor Omni Antenna for 900 MHz WPAN (ANT-WPAN-OM-OUT-N)

This chapter contains the following:

- Overview, on page 809
- Technical Specifications, on page 809
- General Safety Precautions, on page 812
- Guidelines to Achieving Optimal RF and Antenna Performance, on page 813
- Antenna Installation, on page 817
- Installing the Module into the Router, on page 818
- Communications, Services, and Additional Information, on page 819

Overview

This section describes the Outdoor Omnidirectional Antenna for the 900 MHz WPAN module. In addition, this document provides the antenna specifications and mounting instructions of the antenna.

The Omnidirectional Outdoor Antenna is compatible with only the 900 MHz WPAN module that uses a N-connector and requires a mast-mounted outdoor antenna.



Caution Read the information in Safety Warnings before installing or replacing antennas.

Technical Specifications

The Outdoor Omnidirectional Antenna features the following:

- UV-resistant pultruded fiberglass radome
- Heavy duty mounting bracket
- Thick-walled aluminum mounting base
- DC-grounded for ESD protection

RF Specifications

Specification	Description
Frequency range	902 to 928 MHz
Nominal gain (dBi)	4 dBi
Vertical beamwidth	30 degrees
Horizontal beamwidth	360 degrees
Normal impedance	50 ohms
Polarization	Vertical, linear
VSWR	1.5 typical, 2.0 max
Radiation pattern	Omnidirectional

Mechanical Specifications

Specification	Description
Mount style	Adjustable mast or wall mount
Environment	Outdoor
Connector	Type N female
Antenna length	23.25” (59.1 cm)
Weight	1.5 lbs (.68 kg)
Temperature range	-40 to 185-degrees F (-40 to 85 degrees C)
Bending moment at rated wind	4.7 lbf
Equivalent flat plate area	.12 sf
Rated wind	125 mph
Maximum power	150 watts

Radiation Patterns

Figure 347: Outdoor Omnidirectional Antenna Frequency Pattern

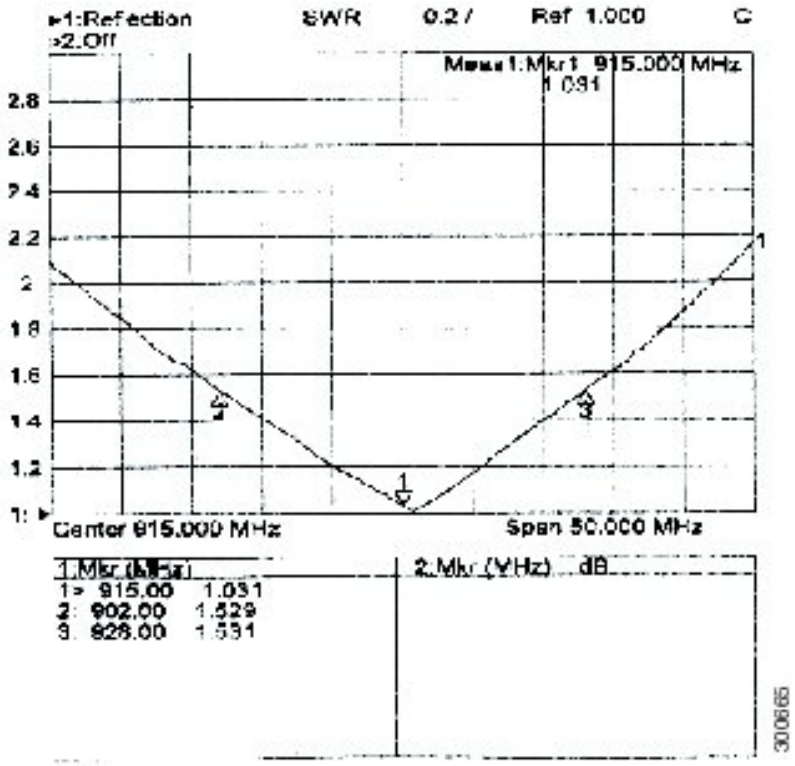

Figure 348: Outdoor Omnidirectional Antenna Radiation Pattern

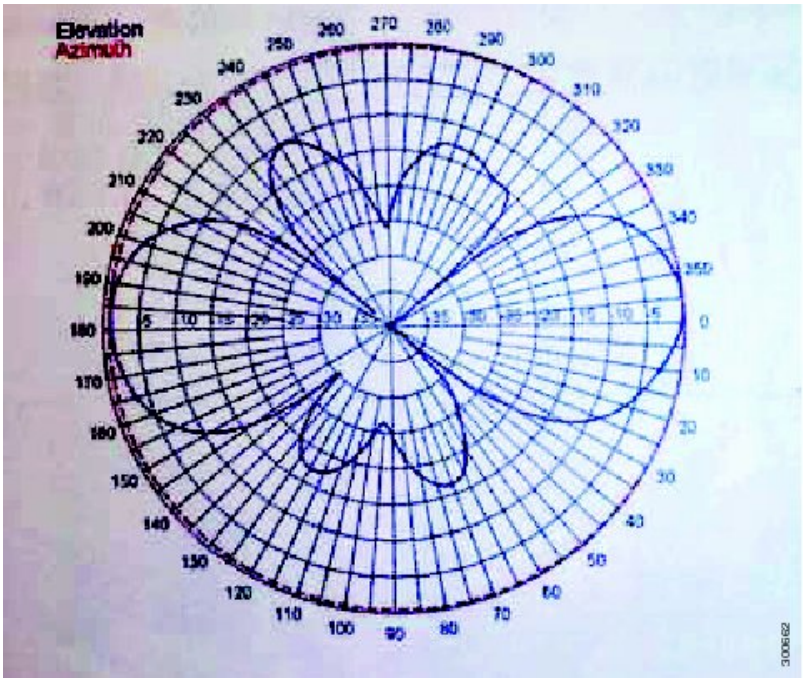

General Safety Precautions



Warning This warning symbol means danger. You are in a situation that could cause bodily injury. Before you work on any equipment, be aware of the hazards involved with electrical circuitry and be familiar with standard practices for preventing accidents. Use the statement number provided at the end of each warning to locate its translation in the translated safety warnings that accompanied this device. **Statement 1071**



Warning Do not work on the system or connect or disconnect cables during periods of lightning activity. **Statement 1001**



Warning Do not locate the outdoor antenna near overhead power lines or other electric light or power circuits, or where it can come into contact with such circuits. When installing the antenna, take extreme care not to come into contact with such circuits, as they may cause serious injury or death. For proper installation and grounding of the antenna, please refer to national and local codes (for example, U.S.:NFPA 70, National Electrical Code, Article 810, Canada:Canadian Electrical Code, Section 54). **Statement 1052**



Warning In order to comply with FCC radio frequency (RF) exposure limits, antennas should be located at a minimum of 7.9 inches (20 cm) or more from the body of all persons. **Statement 332**



Note For your safety, and to help you achieve a good installation, please read and follow these safety precautions.

Mast Mounted or Building Mounted Installations

The following instructions are common to most mast mounted or building mounted installations. For specific installation instructions for each antenna, see the antenna data-sheet and the router hardware installation guide.

- Find someone to help you—installing an antenna is often a two-person job.
- Select your installation site with safety, as well as performance, in mind. Remember that electric power lines and phone lines look alike. For your safety, assume that any overhead line can kill you.
- Contact your electric power company. Tell them your plans and ask them to come look at your proposed installation.
- Do not use a metal ladder.
- Do not work on a wet or windy day.
- Do dress properly—wear shoes with rubber soles and heels, rubber gloves, and a long-sleeved shirt or jacket.

- If the assembly starts to drop, move away from it and let it fall. Because the antenna, mast, cable, and metal guy wires are all excellent conductors of electrical current, even the slightest touch of any of these parts to a power line completes an electrical path through the antenna and the installer.
- If any part of the antenna system should come in contact with a power line, do not touch it or try to remove it yourself. Call your local power company to have it removed safely.
- If an accident should occur with the power lines, call for qualified emergency help immediately.
- Assemble your new antenna on the ground or a level surface at the installation site.
- Connect its coaxial cable while you are on the ground and attach the antenna to the mast.
- Ensure that the mast does not fall as you raise or remove it. Use a durable non-conductive rope secured at each two foot level as the mast is raised. Have an assistant tend the rope, ready to pull the mast clear of any hazards (such as power lines) should it begin to fall.
- Use the mounting bracket provided with the antenna.
- If the installation will use guy wires:
  - Install guy anchor bolts.
  - Estimate the length of guy wire and cut it before raising the mast.
  - Attach guy wires to a mast using guy rings.
  - In the case of a guyed (tall, thin mast) installation, you must have at least one assistant to hold the mast upright while the guy wires are attached and tightened to the anchor bolts.
- Attach a “DANGER” label at eye level on the mast.
- Install ground rods to remove any static electricity buildup and connect a ground wire to the mast and ground rod. Use ground rods designed for that purpose, not a spare piece of pipe.

Unused Antenna Ports

Port plugs must be installed in any unused antenna ports.

The weatherproof caps on the connectors protect the router interior from environmental elements including water, heat, cold, and dust. They are installed on unused ports before the router is shipped.

When you install a new antenna in a port with an N-connector:

- Chassis-mounted antennas—Remove the weather proof cap before installing a chassis-mounted antenna.
- External antennas—Remove weatherproof cap, then connect the supported Cisco cable to the connector.

Guidelines to Achieving Optimal RF and Antenna Performance

Antennas are a critical component of a wireless communication system. Selecting a suitable antenna, an optimal antenna location, or antenna site is essential for optimum performance of a wireless links.

This section covers general tips for optimizing RF performance of indoor and outdoor terrestrial radio systems in the 400-7125 MHz frequency range. Examples of terrestrial radio systems include 4G LTE, 5G NR, Wi-Fi,

LoRa, LR-WPAN and similar. In this context GPS SPS would not be considered a terrestrial system as the signal is received from space, not from another terrestrial site.

Because the antenna transmits and receives radio signals over the air, overall RF performance of the link is susceptible to RF obstructions and common sources of RF interference that can reduce throughput and range of the system.

Follow these guidelines to optimize performance. When in doubt, consult a qualified RF professional, and check with your solution partner for specific recommendations.

Antenna Model Selection and Performance

Consider the following when planning your installation:

- When selecting the antenna, ensure that it covers the frequency ranges or frequency bands of interest, and that it has good RF parameters such as antenna efficiency, VSWR and suitable radiation pattern for every frequency range that your application will use with this antenna.
- Antenna pattern is important. Omni-directional antennas have lower gain, but allow communicating to devices in all azimuth directions. Directional antennas concentrate the beam in a specific direction, making them ideal for point to point communication.
- When a system has multiple RF ports for receive and / or transmit, as is the case for 4G LTE , 5G NR or Wi-Fi, it is highly recommended to populate all the RF ports with suitable antennas to take advantage of MIMO, rather than rely on a single port or single antenna to save on cost. Please see the MIMO section for a detailed description of MIMO benefits.
- For RF systems that support multiple RF ports and multiple RF standards such as LTE, Wi-Fi, and GPS: consider using a multi-element antenna that integrates multiple antennas under the same radome (cover). Doing so may reduce cost compared to deploying and mounting a discrete single port antenna for every RF port.
- For communication between fixed infrastructure devices, such as mesh nodes or a point-to-point backhaul link, each device should have an antenna with the same polarization. If communicating with mobile devices that might be randomly oriented, consider dual-polarized antennas, such as those with both vertical and horizontal or slant +45° and -45° polarized elements.

Antenna Environmental Specifications

The selected antenna must have suitable mechanical and environmental specifications for the environment where it will be deployed. For example, shock and vibration specifications for transportation, corrosion resistant construction for marine and oil and gas industries, or IP (ingress protection) rating for outdoor deployment. Indoor antennas are typically not suitable for harsh industrial environments. Please check with your system integrator for environmental requirements for your application.

Antenna Accessories and Mounting

Consider the following when planning your installation:

- Carefully consider what type of other RF accessories, besides antenna, such as RF cables, lightning arrestors or RF adapters may be required in your installations. It is best to minimize long RF cable runs due to RF signal losses in the cable. Thinner RF cables have more RF loss , thicker cables are less flexible and more expensive.

- Carefully consider how the antenna will be physically mounted, as this may affect antenna selection. For example, a stud mount mechanical mounting design is a better fit for mounting on top of an electrical cabinet than a mast mount antenna.
- For outdoor deployments, follow installation instructions for the antenna. It is good practice to keep protective covers on the radio's RF ports and any antenna or accessory RF ports until the moment the interfaces are mated. This reduces chances of contamination, trapping water or condensation inside the connector, or accidental damage to RF interfaces.

MIMO Performance and Arrays

MIMO systems deliver benefits of higher SNR, higher reliability and higher throughput compared to single antenna systems. In more technical terms, MIMO delivers array gain, diversity gain and multiplexing gain compared to single antenna.

- Array gain — Improvement in SNR (signal to noise ratio) by coherently combining signals from multiple antennas. For example, increasing SNR through beamforming techniques.
- Diversity gain — Improvement in reliability by mitigating deep fading or strong destructive EM wave interference. For example, in a two-antenna system, if one antenna is experiencing deep fading due to an EM destructive null at its location at a given instant, the other antenna is unlikely to have a null at the same instant, and the combined SNR stays at a reliable level. In contrast, a single antenna would see SNR oscillating between good SNR and very poor SNR and reliability would degrade.
- Multiplexing gain — Increase in system capacity or throughput by sending independent data over multiple spatial streams simultaneously. The number of streams cannot be more than the number of antennas. For example, to support three spatial streams, a minimum of three antennas is required. Often there may be additional antennas for diversity or redundancy, such as in the case of 4x4:3, or 4x4 MIMO with 3 spatial streams.

If deploying multiple single-element antennas for a MIMO system in an array, ensure sufficient spacing between the antennas. Omnidirectional elements should generally be at least one wavelength apart at the lowest operating frequency.

Consider the following:

- For Wi-Fi systems operating in the 2.4, 5, and/or 6 GHz bands, space elements at least 5 inches (12.5 cm) apart.
- For 4G LTE and 5G systems with the lowest operating frequency of 617 MHz , space elements at least 20 inches (50 cm) apart.
- Note that spacing between elements inside multi-element MIMO antennas is often less than one wavelength. However multi-element antennas are engineered with MIMO performance in mind, by providing antenna diversity through pattern, polarization, and isolation between MIMO elements.

Antenna siting and location

Consider the following when planning your installation:

- Plan antenna location ahead of time. Ideal location for an antenna is in LOS (line of sight) of the counterpart that it is trying to communicate with. Under LOS conditions the signals propagate directly between the two communication nodes, without relying on signal bouncing off a wall or other structure to reach the counterpart. This is sometimes not possible to achieve in practice, but it is a useful goal to keep in mind when optimizing antenna location.

- While it is good to keep RF cables short, it is most desirable for an antenna to be in the best location it can be to provide the desired coverage.
- For large deployments involving multiple units communicating with each other across a complex urban or industrial landscape, consider running an RF propagation modeling study to predict approximate simulated coverage maps and determine initial placement of the units. A propagation study may help reduce overall deployment cost by discovering and mitigating issues with RF coverage before the infrastructure is physically installed.
- Keep the antenna away from metal obstructions such as heating and air-conditioning ducts, large ceiling trusses, building superstructures, and major power cabling runs. One exception is if the antenna is designed to be mounted on a ground plane. If mounting on a ground plane, mount the antenna on a flat metal surface away from adjacent obstructions.
- It is strongly recommended not to install antennas directly on the router or access point (AP), unless the router or AP is specifically engineered to directly mount the antennas. Products that are engineered for direct mounting of antennas specifically address each of the below issues.
- Reasons to mount antennas away from the router include:
  - Router location may not be optimal location for antenna to communicate with the counterpart wirelessly, so router and antenna may need to be in different locations.
  - Router may have a clutter of Ethernet cable and power cables around it, which will obstruct antenna signal.
  - A number of routers, such as the IR1835, are modular. They have plug-in RF modules for Wi-Fi , 4G LTE or 5G NR such as WP-WIFI6, P-LTEAP18-GL, P-5GS6-GL. These modules have RF connectors spaced close together, and while it is mechanically possible to install four or five antennas directly attached, this will result in significant degradation to RF performance of antennas due to mutual de-tuning between closely spaced antennas. It is strongly recommended to install antennas away from the chassis in modular cases.
- If installing an antenna indoors, consider that the density and electromagnetic properties of the materials used in the building construction determines the number of walls the signal can pass through and still maintain adequate coverage.
  - Paper and vinyl walls have very little effect on signal penetration.
  - Solid and pre-cast concrete walls limit signal penetration to one or two walls without degrading coverage.
  - Concrete and wood block walls limit signal penetration to three or four walls.
  - A signal can penetrate five or six walls constructed of drywall or wood.
  - A thick metal wall causes signals to reflect off, causing poor penetration.
  - A chain link fence or wire mesh spaced between 1 and 1 1/2 in. (2.5 and 3.8 cm) acts as a harmonic reflector that blocks a 2.4-GHz radio signal.
  - Install the antenna away from microwave ovens and 2-GHz cordless phones. These products can cause signal interference because they operate in the same frequency range as the device your antenna is connected to.

Antenna Installation

The antenna installation includes the following procedures:

Tools and Equipment Required

In addition to the parts included in the antenna kit, you must provide the following tool to install the antenna on the router:

- A #2 Phillips screwdriver
- A hose clamp (shipped with your antenna)
- 3/4 in. open-end wrench

Note This list does not include the tools and equipment required to assemble and erect the tower, mast, or other structure you intend to mount your antenna on.

Attaching the Mounting Bracket

The antenna is provided with a mounting kit consisting of a mounting bracket and hose clamp. This kit allows you to mount the antenna to masts from 1.25 inches (3.2 centimeters) to 2 inches (5.1 cm). Cisco recommends that a 1.5 inch (3.8 centimeter) or larger tubing mast be used.

The antenna is vertically polarized. Since the antenna has vertical gain, it is very important to mount the antenna in a vertical (not leaning) position for optimal performance.

Follow these steps to mount the antenna onto a mast. Refer to the following graphic for guidance.

Figure 349: Antenna and Bracket



1. Place the connector end of the antenna (**1**) through the hole in the antenna bracket (**2**).
2. Attach the bracket to the top of the mast. The top surface of the mounting mast must not exceed the top surface of the mounting bracket. Securely tighten hose clamps.
3. Attach the cable to the antenna connector.

Installing the Module into the Router

If the corresponding module is not already installed in the router, install it according to the installation and configuration guide for the module.

Communications, Services, and Additional Information

- To receive timely, relevant information from Cisco, sign up at Cisco Profile Manager.
- To get the business impact you're looking for with the technologies that matter, visit Cisco Services.
- To submit a service request, visit Cisco Support.
- To discover and browse secure, validated enterprise-class apps, products, solutions, and services, visit Cisco DevNet.
- To obtain general networking, training, and certification titles, visit Cisco Press.
- To find warranty information for a specific product or product family, access Cisco Warranty Finder.

Cisco Bug Search Tool

Cisco Bug Search Tool (BST) is a web-based tool that acts as a gateway to the Cisco bug tracking system that maintains a comprehensive list of defects and vulnerabilities in Cisco products and software. BST provides you with detailed defect information about your products and software.

Documentation Feedback

To provide feedback about Cisco technical documentation, use the feedback form available in the right pane of every online document.

Cisco Support Community

Cisco Support Community is a forum for you to ask and answer questions, share suggestions, and collaborate with your peers. Join the forum at https://supportforums.cisco.com/index.jspa.

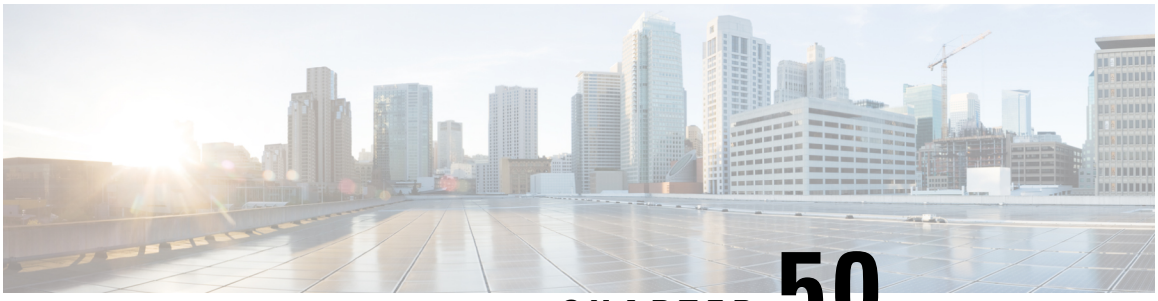

CHAPTER 50

Cisco WPAN Yagi Antenna (ANT-WPAN-Y-OUT-N)

This chapter contains the following:

- Overview, on page 821
- Technical Specifications, on page 822
- General Safety Precautions, on page 833
- Guidelines to Achieving Optimal RF and Antenna Performance, on page 835
- Installing the Antenna, on page 838
- Communications, Services, and Additional Information, on page 839

Overview

This section describes the technical specifications and installation instructions for the Cisco WPAN Yagi antenna. The antenna is a single-port antenna designed to cover the 860 – 876 and 902 – 928 MHz ISM bands.

Caution Read the information in Safety Warnings before installing or replacing antennas.

The Cisco WPAN Yagi antenna (ANT-WPAN-Y-OUT-N) has the following features:

- 860 - 960 MHz operation
- Directional, linearly polarized
- Outdoor location
- Mast mount installation
- Pigtail with N female connector

Figure 350: Cisco ANT-WPAN-Y-OUT-N Antenna



Technical Specifications

This section contains the following:

RF Specifications

The following are the Radio Frequency (RF) antenna specifications for the Cisco ANT-WPAN-Y-OUT-N Antenna:

Specification	Description
Antenna Type	Yagi antenna
Operating frequency range	860 to 960 MHz
Nominal impedance	50 ohms
VSWR	1.5:1 maximum
Gain	9 dBi typical, 10 dBi maximum
3 dB beamwidth (vertical plane)	76 degrees
3 dB beamwidth (horizontal plane)	57 degrees
Polarization	Linear
Radiation Pattern	Directional
Maximum input power	100 Watts

Environmental and Mechanical Specifications

The following are the Environmental and Mechanical Specifications for the Cisco ANT-WPAN-Y-OUT-N Antenna:

Specification	Description
Operating temperature range	-40 to 158°F (-40 to 70°C)
Mount style	Mast mount
Location	Outdoor
Connector	18” RG8 pigtail with N female connector
Dimensions	19.7 x 11.61 x 3.23 in. (50 x 29.5 x 82 cm)
Weight	2.4 lbs (1.1 kg)
Wind rating	201 km/hr (125 mph)
IP rating	IP67
Material substance compliance	RoHS compliant

Radiation Patterns

The following diagrams illustrate the radiation patterns for the Cisco ANT-WPAN-Y-OUT-N Antenna:

Figure 351: 860 MHz Antenna Radiation Pattern — Horizontal Plane

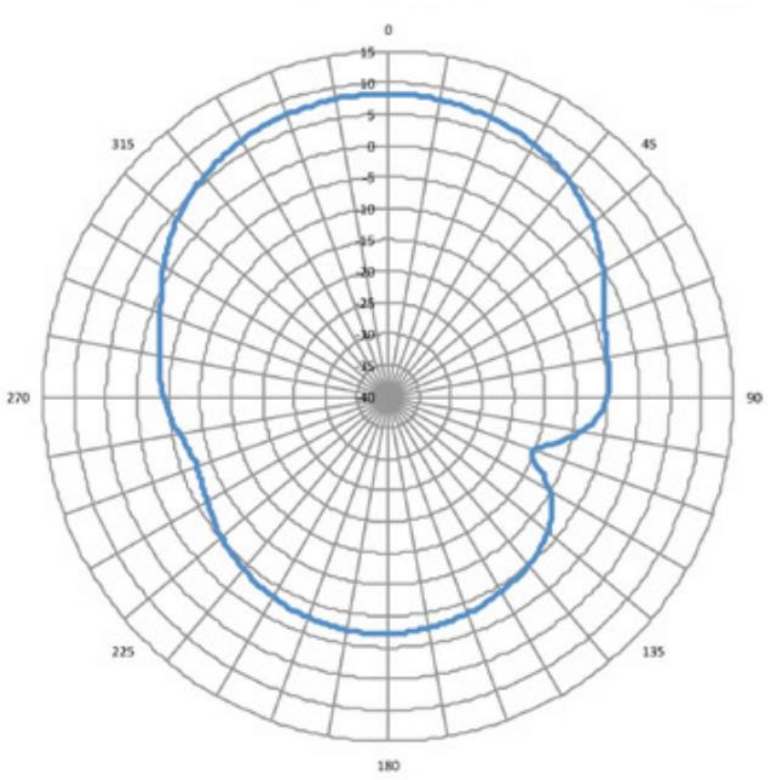

Figure 352: 860 MHz Antenna Radiation Pattern — Vertical Plane

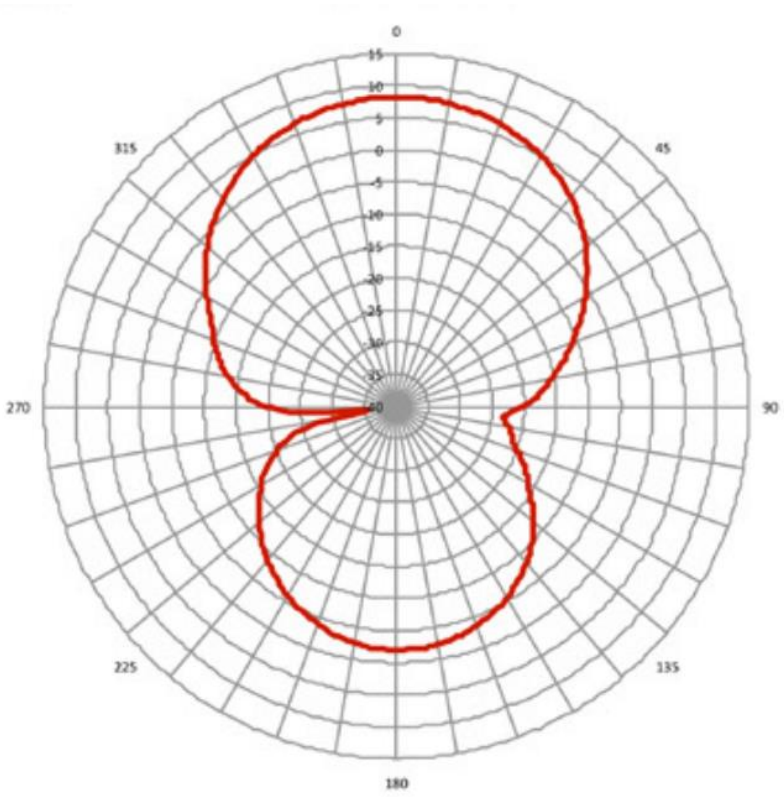

Figure 353: 902 MHz Antenna Radiation Pattern — Horizontal Plane

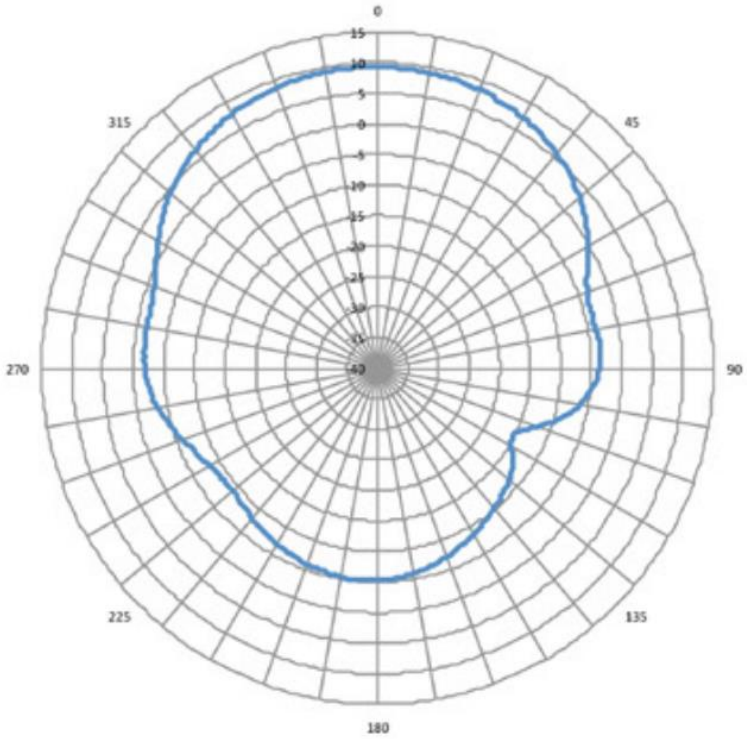

Figure 354: 902 MHz Antenna Radiation Pattern — Vertical Plane

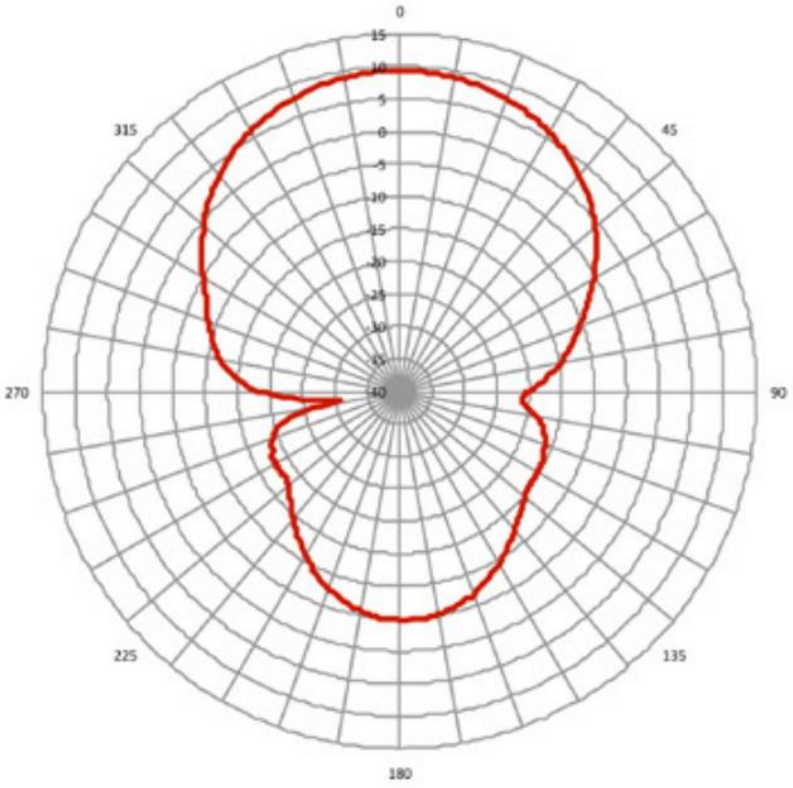

Figure 355: 910 MHz Antenna Radiation Pattern — Horizontal Plane

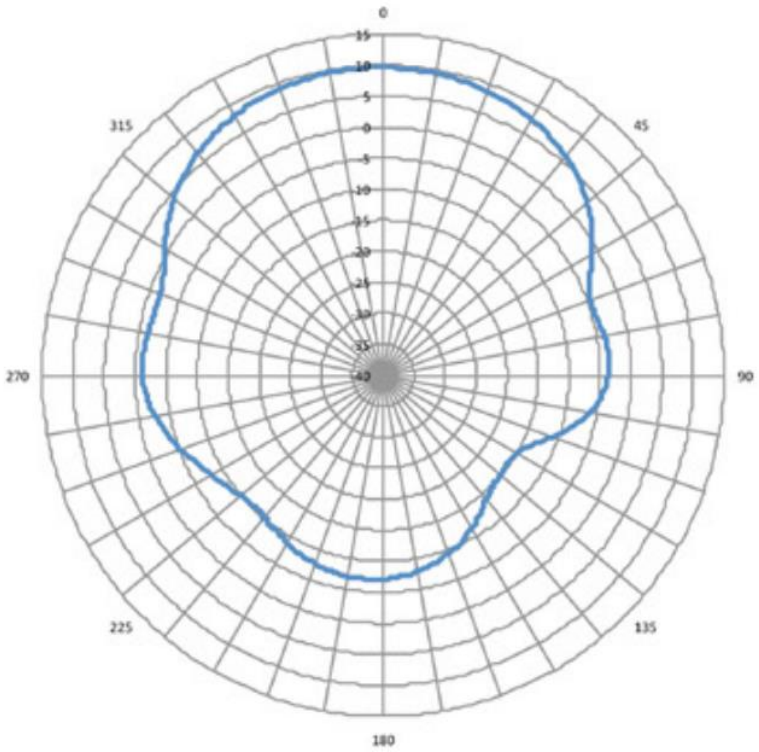

Figure 356: 910 MHz Antenna Radiation Pattern — Vertical Plane

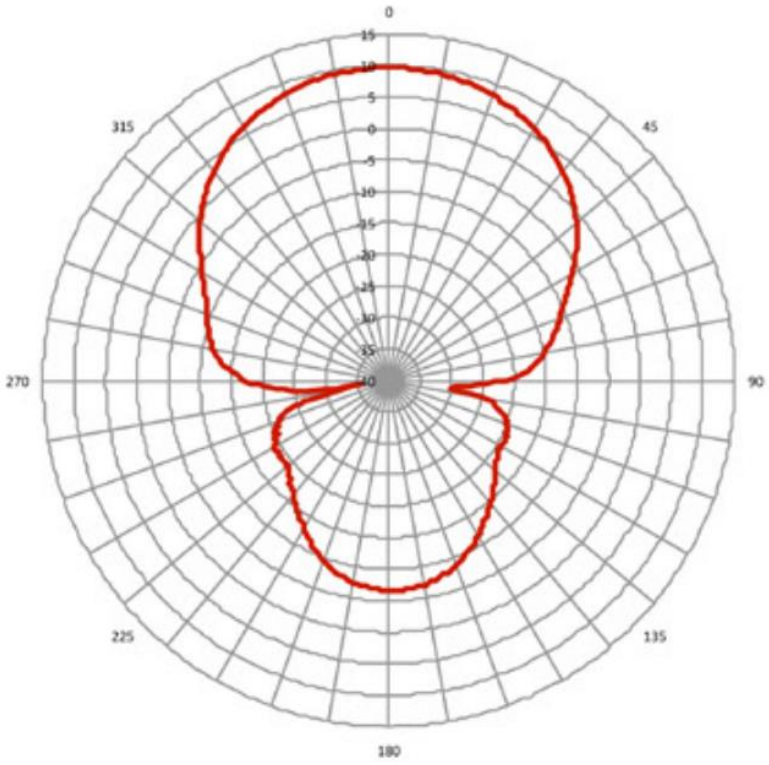

Figure 357: 928 MHz Antenna Radiation Pattern — Horizontal Plane

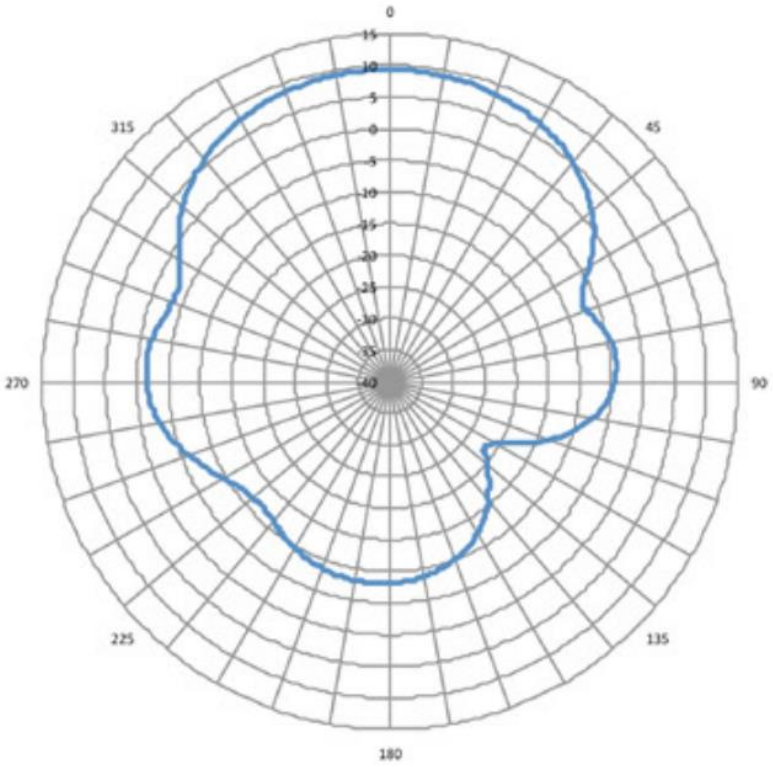

Figure 358: 928 MHz Antenna Radiation Pattern — Vertical Plane

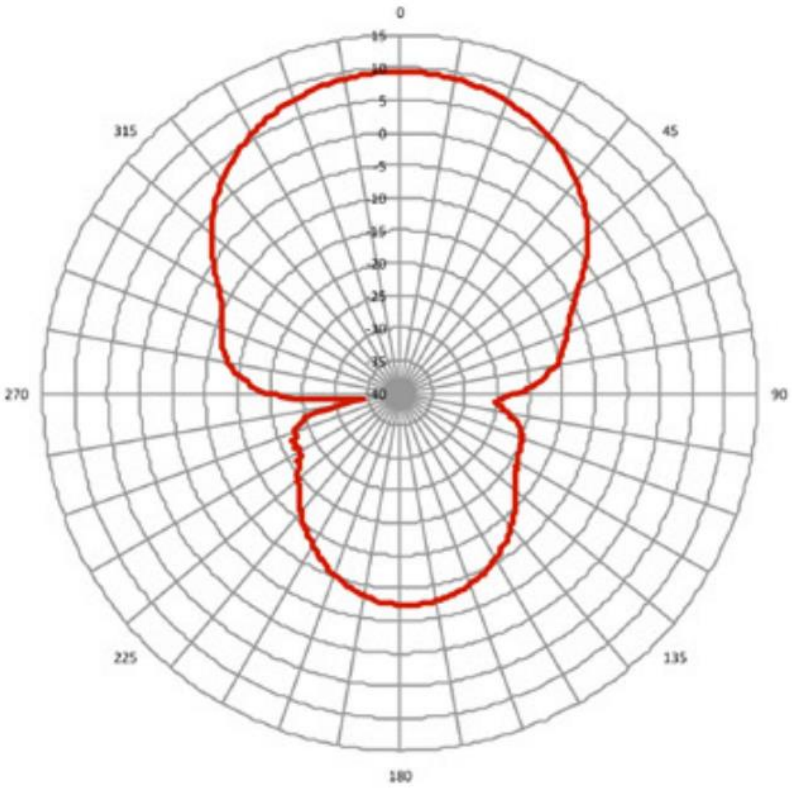

Figure 359: 960 MHz Antenna Radiation Pattern — Horizontal Plane

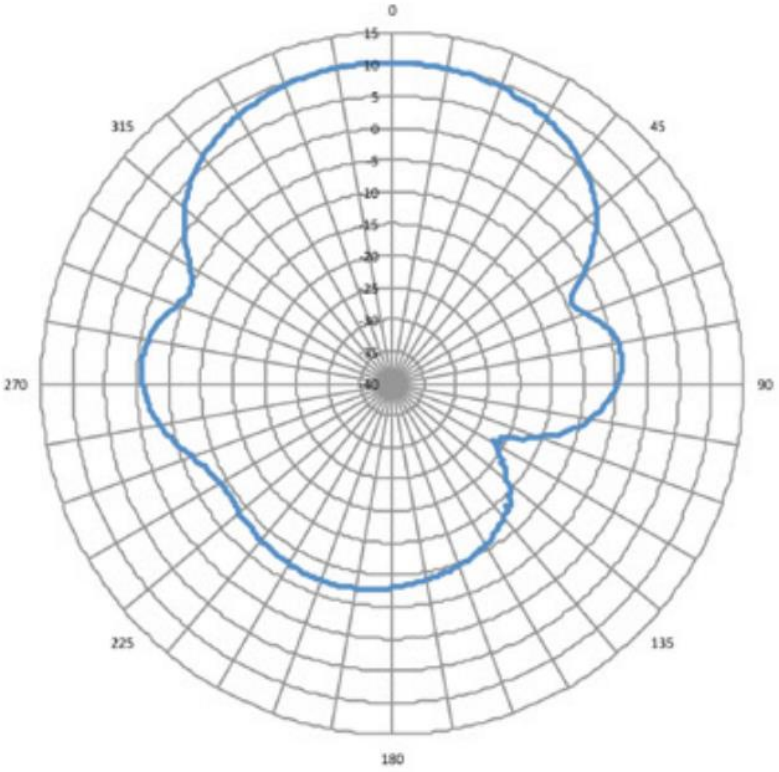

Figure 360: 960 MHz Antenna Radiation Pattern — Vertical Plane

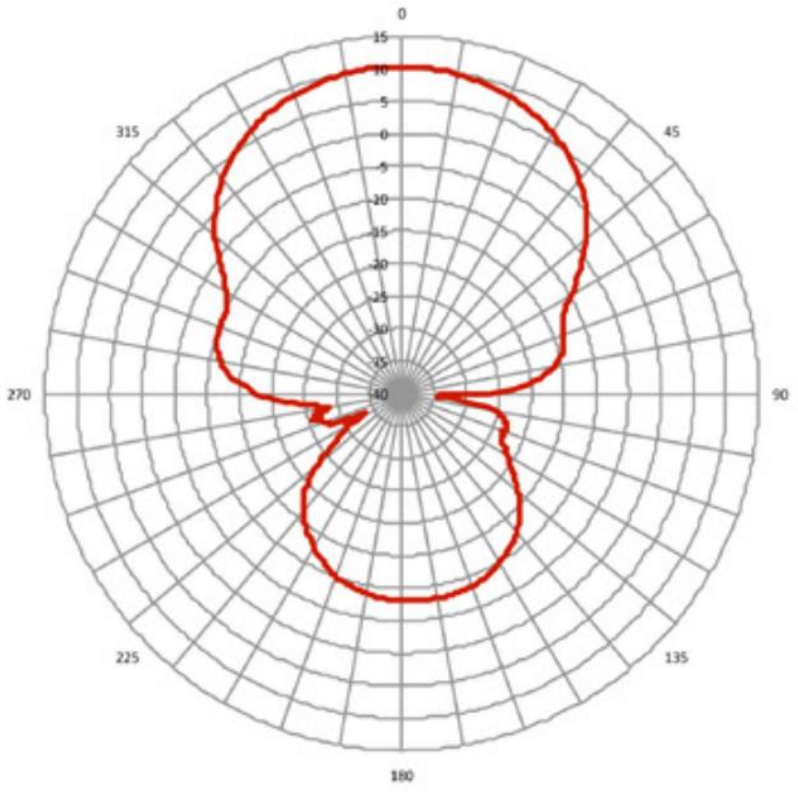

General Safety Precautions

Warning This warning symbol means danger. You are in a situation that could cause bodily injury. Before you work on any equipment, be aware of the hazards involved with electrical circuitry and be familiar with standard practices for preventing accidents. Use the statement number provided at the end of each warning to locate its translation in the translated safety warnings that accompanied this device. **Statement 1071**

Warning Do not work on the system or connect or disconnect cables during periods of lightning activity. **Statement 1001**

Warning Do not locate the outdoor antenna near overhead power lines or other electric light or power circuits, or where it can come into contact with such circuits. When installing the antenna, take extreme care not to come into contact with such circuits, as they may cause serious injury or death. For proper installation and grounding of the antenna, please refer to national and local codes (for example, U.S.:NFPA 70, National Electrical Code, Article 810, Canada:Canadian Electrical Code, Section 54). **Statement 1052**

Warning In order to comply with FCC radio frequency (RF) exposure limits, antennas should be located at a minimum of 7.9 inches (20 cm) or more from the body of all persons. **Statement 332**

Note For your safety, and to help you achieve a good installation, please read and follow these safety precautions.

Mast Mounted or Building Mounted Installations

The following instructions are common to most mast mounted or building mounted installations. For specific installation instructions for each antenna, see the antenna data-sheet and the router hardware installation guide.

- Find someone to help you—installing an antenna is often a two-person job.
- Select your installation site with safety, as well as performance, in mind. Remember that electric power lines and phone lines look alike. For your safety, assume that any overhead line can kill you.
- Contact your electric power company. Tell them your plans and ask them to come look at your proposed installation.
- Do not use a metal ladder.
- Do not work on a wet or windy day.
- Do dress properly—wear shoes with rubber soles and heels, rubber gloves, and a long-sleeved shirt or jacket.
- If the assembly starts to drop, move away from it and let it fall. Because the antenna, mast, cable, and metal guy wires are all excellent conductors of electrical current, even the slightest touch of any of these parts to a power line completes an electrical path through the antenna and the installer.
- If any part of the antenna system should come in contact with a power line, do not touch it or try to remove it yourself. Call your local power company to have it removed safely.
- If an accident should occur with the power lines, call for qualified emergency help immediately.
- Assemble your new antenna on the ground or a level surface at the installation site.
- Connect its coaxial cable while you are on the ground and attach the antenna to the mast.
- Ensure that the mast does not fall as you raise or remove it. Use a durable non-conductive rope secured at each two foot level as the mast is raised. Have an assistant tend the rope, ready to pull the mast clear of any hazards (such as power lines) should it begin to fall.
- Use the mounting bracket provided with the antenna.
- If the installation will use guy wires:
    - Install guy anchor bolts.
    - Estimate the length of guy wire and cut it before raising the mast.
    - Attach guy wires to a mast using guy rings.
    - In the case of a guyed (tall, thin mast) installation, you must have at least one assistant to hold the mast upright while the guy wires are attached and tightened to the anchor bolts.

- Attach a “DANGER” label at eye level on the mast.
- Install ground rods to remove any static electricity buildup and connect a ground wire to the mast and ground rod. Use ground rods designed for that purpose, not a spare piece of pipe.

Unused Antenna Ports

Port plugs must be installed in any unused antenna ports.

The weatherproof caps on the connectors protect the router interior from environmental elements including water, heat, cold, and dust. They are installed on unused ports before the router is shipped.

When you install a new antenna in a port with an N-connector:

- Chassis-mounted antennas—Remove the weather proof cap before installing a chassis-mounted antenna.
- External antennas—Remove weatherproof cap, then connect the supported Cisco cable to the connector.

Guidelines to Achieving Optimal RF and Antenna Performance

Antennas are a critical component of a wireless communication system. Selecting a suitable antenna, an optimal antenna location, or antenna site is essential for optimum performance of a wireless links.

This section covers general tips for optimizing RF performance of indoor and outdoor terrestrial radio systems in the 400-7125 MHz frequency range. Examples of terrestrial radio systems include 4G LTE, 5G NR, Wi-Fi, LoRa, LR-WPAN and similar. In this context GPS SPS would not be considered a terrestrial system as the signal is received from space, not from another terrestrial site.

Because the antenna transmits and receives radio signals over the air, overall RF performance of the link is susceptible to RF obstructions and common sources of RF interference that can reduce throughput and range of the system.

Follow these guidelines to optimize performance. When in doubt, consult a qualified RF professional, and check with your solution partner for specific recommendations.

Antenna Model Selection and Performance

Consider the following when planning your installation:

- When selecting the antenna, ensure that it covers the frequency ranges or frequency bands of interest, and that it has good RF parameters such as antenna efficiency, VSWR and suitable radiation pattern for every frequency range that your application will use with this antenna.
- Antenna pattern is important. Omni-directional antennas have lower gain, but allow communicating to devices in all azimuth directions. Directional antennas concentrate the beam in a specific direction, making them ideal for point to point communication.
- When a system has multiple RF ports for receive and / or transmit, as is the case for 4G LTE , 5G NR or Wi-Fi, it is highly recommended to populate all the RF ports with suitable antennas to take advantage of MIMO, rather than rely on a single port or single antenna to save on cost. Please see the MIMO section for a detailed description of MIMO benefits.
- For RF systems that support multiple RF ports and multiple RF standards such as LTE, Wi-Fi, and GPS: consider using a multi-element antenna that integrates multiple antennas under the same radome (cover).

Doing so may reduce cost compared to deploying and mounting a discrete single port antenna for every RF port.

- For communication between fixed infrastructure devices, such as mesh nodes or a point-to-point backhaul link, each device should have an antenna with the same polarization. If communicating with mobile devices that might be randomly oriented, consider dual-polarized antennas, such as those with both vertical and horizontal or slant +45° and -45° polarized elements.

Antenna Environmental Specifications

The selected antenna must have suitable mechanical and environmental specifications for the environment where it will be deployed. For example, shock and vibration specifications for transportation, corrosion resistant construction for marine and oil and gas industries, or IP (ingress protection) rating for outdoor deployment. Indoor antennas are typically not suitable for harsh industrial environments. Please check with your system integrator for environmental requirements for your application.

Antenna Accessories and Mounting

Consider the following when planning your installation:

- Carefully consider what type of other RF accessories, besides antenna, such as RF cables, lightning arrestors or RF adapters may be required in your installations. It is best to minimize long RF cable runs due to RF signal losses in the cable. Thinner RF cables have more RF loss , thicker cables are less flexible and more expensive.
- Carefully consider how the antenna will be physically mounted, as this may affect antenna selection. For example, a stud mount mechanical mounting design is a better fit for mounting on top of an electrical cabinet than a mast mount antenna.
- For outdoor deployments, follow installation instructions for the antenna. It is good practice to keep protective covers on the radio's RF ports and any antenna or accessory RF ports until the moment the interfaces are mated. This reduces chances of contamination, trapping water or condensation inside the connector, or accidental damage to RF interfaces.

MIMO Performance and Arrays

MIMO systems deliver benefits of higher SNR, higher reliability and higher throughput compared to single antenna systems. In more technical terms, MIMO delivers array gain, diversity gain and multiplexing gain compared to single antenna.

- Array gain — Improvement in SNR (signal to noise ratio) by coherently combining signals from multiple antennas. For example, increasing SNR through beamforming techniques.
- Diversity gain — Improvement in reliability by mitigating deep fading or strong destructive EM wave interference. For example, in a two-antenna system, if one antenna is experiencing deep fading due to an EM destructive null at its location at a given instant, the other antenna is unlikely to have a null at the same instant, and the combined SNR stays at a reliable level. In contrast, a single antenna would see SNR oscillating between good SNR and very poor SNR and reliability would degrade.
- Multiplexing gain — Increase in system capacity or throughput by sending independent data over multiple spatial streams simultaneously. The number of streams cannot be more than the number of antennas. For example, to support three spatial streams, a minimum of three antennas is required. Often there may be additional antennas for diversity or redundancy, such as in the case of 4x4:3, or 4x4 MIMO with 3 spatial streams.

If deploying multiple single-element antennas for a MIMO system in an array, ensure sufficient spacing between the antennas. Omnidirectional elements should generally be at least one wavelength apart at the lowest operating frequency.

Consider the following:

- For Wi-Fi systems operating in the 2.4, 5, and/or 6 GHz bands, space elements at least 5 inches (12.5 cm) apart.
- For 4G LTE and 5G systems with the lowest operating frequency of 617 MHz , space elements at least 20 inches (50 cm) apart.
- Note that spacing between elements inside multi-element MIMO antennas is often less than one wavelength. However multi-element antennas are engineered with MIMO performance in mind, by providing antenna diversity through pattern, polarization, and isolation between MIMO elements.

Antenna siting and location

Consider the following when planning your installation:

- Plan antenna location ahead of time. Ideal location for an antenna is in LOS (line of sight) of the counterpart that it is trying to communicate with. Under LOS conditions the signals propagate directly between the two communication nodes, without relying on signal bouncing off a wall or other structure to reach the counterpart. This is sometimes not possible to achieve in practice, but it is a useful goal to keep in mind when optimizing antenna location.
- While it is good to keep RF cables short, it is most desirable for an antenna to be in the best location it can be to provide the desired coverage.
- For large deployments involving multiple units communicating with each other across a complex urban or industrial landscape, consider running an RF propagation modeling study to predict approximate simulated coverage maps and determine initial placement of the units. A propagation study may help reduce overall deployment cost by discovering and mitigating issues with RF coverage before the infrastructure is physically installed.
- Keep the antenna away from metal obstructions such as heating and air-conditioning ducts, large ceiling trusses, building superstructures, and major power cabling runs. One exception is if the antenna is designed to be mounted on a ground plane. If mounting on a ground plane, mount the antenna on a flat metal surface away from adjacent obstructions.
- It is strongly recommended not to install antennas directly on the router or access point (AP), unless the router or AP is specifically engineered to directly mount the antennas. Products that are engineered for direct mounting of antennas specifically address each of the below issues.
- Reasons to mount antennas away from the router include:
    - Router location may not be optimal location for antenna to communicate with the counterpart wirelessly, so router and antenna may need to be in different locations.
    - Router may have a clutter of Ethernet cable and power cables around it, which will obstruct antenna signal.
    - A number of routers, such as the IR1835, are modular. They have plug-in RF modules for Wi-Fi , 4G LTE or 5G NR such as WP-WIFI6, P-LTEAP18-GL, P-5GS6-GL. These modules have RF connectors spaced close together, and while it is mechanically possible to install four or five antennas directly attached, this will result in significant degradation to RF performance of antennas due to

mutual de-tuning between closely spaced antennas. It is strongly recommended to install antennas away from the chassis in modular cases.

- If installing an antenna indoors, consider that the density and electromagnetic properties of the materials used in the building construction determines the number of walls the signal can pass through and still maintain adequate coverage.
  - Paper and vinyl walls have very little effect on signal penetration.
  - Solid and pre-cast concrete walls limit signal penetration to one or two walls without degrading coverage.
  - Concrete and wood block walls limit signal penetration to three or four walls.
  - A signal can penetrate five or six walls constructed of drywall or wood.
  - A thick metal wall causes signals to reflect off, causing poor penetration.
  - A chain link fence or wire mesh spaced between 1 and 1 1/2 in. (2.5 and 3.8 cm) acts as a harmonic reflector that blocks a 2.4-GHz radio signal.
  - Install the antenna away from microwave ovens and 2-GHz cordless phones. These products can cause signal interference because they operate in the same frequency range as the device your antenna is connected to.

Installing the Antenna

This section contains the following:

Contents of the Antenna Kit

The antenna kit contains:

- 1 x Cisco ANT-WPAN-Y-OUT-N Antenna
- 1 x Mounting bracket with washers and nuts
- 2 x U-bolts with washers and nuts
- 1 x Weatherproofing kit

Tools and Equipment Required

In addition to the parts included in the antenna kit described in the previous section, you must provide the following tool to install the antenna on the router:

- Open-ended wrench



Note This list does not include the tools and equipment required to assemble and erect the tower, mast, or other structure you intend to mount your antenna on.

Preparing the Antenna for Installation

Note Before mounting the antenna on a mast or pole, the antenna must be attached to the mounting bracket.

To prepare the antenna for installation:

- Attach the bracket to the antenna support beam. Tighten the four nuts tight enough to stabilize the antenna. Torque to 45 in.-lbs. (5.1 N-m). The bracket should be toward the back of the antenna support beam.

Mounting the Antenna

Follow these instructions to mount the antenna.

1. Attach the antenna assembly to the pole using the two U-bolts provided. The antenna elements should be vertical for vertical polarization.
2. Tighten the nuts evenly and enough to secure the antenna on the pole. Torque the nuts to 60 in.-lbs. (6.8 N-m).
3. Connect the RF cable to the pigtail and weatherproof the connection. Be sure to secure the cable to the pole using UV resistant tie wraps.

Connecting the Lightning Arrestor

To attach the router-end of the cable to your router, see the Dual Antenna Advanced Range Extender—Dual Antenna Configuration section of the Cisco IR500 Series WPAN Gateway and WPAN Range Extender Installation and Configuration Guide .

Connecting the Antenna to the Router

To attach the router-end of the cable to your router, see the Dual Antenna Advanced Range Extender—Dual Antenna Configuration section of the Cisco IR500 Series WPAN Gateway and WPAN Range Extender Installation and Configuration Guide .

Note Coaxial cable loses efficiency as the frequency increases, resulting in signal loss. The cable should be kept as short as possible because cable length also determines the amount of signal loss—the longer the cable length or run, the greater the loss).

Communications, Services, and Additional Information

- To receive timely, relevant information from Cisco, sign up at Cisco Profile Manager.
- To get the business impact you're looking for with the technologies that matter, visit Cisco Services.
- To submit a service request, visit Cisco Support.

- To discover and browse secure, validated enterprise-class apps, products, solutions, and services, visit Cisco DevNet.
- To obtain general networking, training, and certification titles, visit Cisco Press.
- To find warranty information for a specific product or product family, access Cisco Warranty Finder.

Cisco Bug Search Tool

Cisco Bug Search Tool (BST) is a web-based tool that acts as a gateway to the Cisco bug tracking system that maintains a comprehensive list of defects and vulnerabilities in Cisco products and software. BST provides you with detailed defect information about your products and software.

Documentation Feedback

To provide feedback about Cisco technical documentation, use the feedback form available in the right pane of every online document.

Cisco Support Community

Cisco Support Community is a forum for you to ask and answer questions, share suggestions, and collaborate with your peers. Join the forum at https://supportforums.cisco.com/index.jspa.

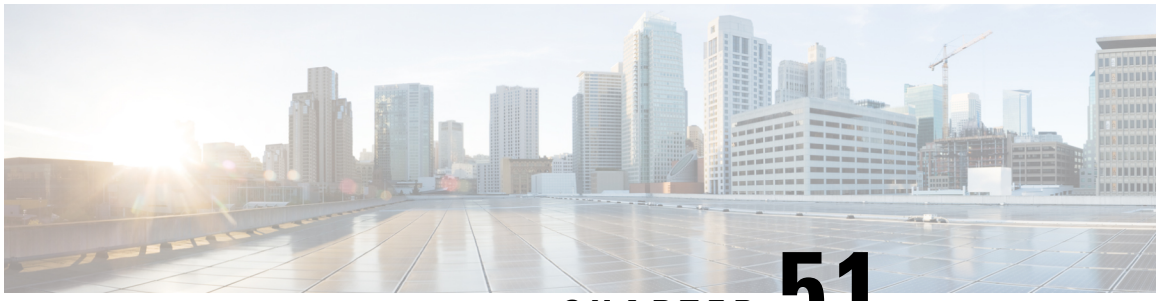

CHAPTER 51

Cisco Indoor/Outdoor Active GPS Antenna (GPS-ACT-ANTM-SMA)

This chapter contains the following:

- Overview, on page 841
- Specifications, on page 841
- General Safety Precautions, on page 842
- Guidelines to Achieving Optimal RF and Antenna Performance, on page 844
- Installing the Cisco Active GPS Antenna, on page 847
- Communications, Services, and Additional Information, on page 849

Overview

The Cisco indoor/outdoor, active GPS antenna (GPS-ACT-ANTM-SMA) can be physically connected to the Cisco Integrated Services Routers (ISRs) and Cisco Enhanced High-Speed WAN Interface Cards (EHWICs) to receive GPS broadcasts from satellites.

Specifications

Specification	Description
Maximum RF input power	1 W
Power Supply	3-5VDC, 20mA typical @3V 30mA typical @5V
Amplifier Gain	27dB typical @25C
Amplifier Filter Topology	Antenna-LNA1-BPF1-LNA2-cable-SMA(m) connector. Due to a topology without front end filter immediately following the antenna, antenna has the benefit of lower noise figure, but may not be suitable for collocation with a high power wireless transceiver.

Specification	Description
Connector	SMA male
VSWR **Note 1**	2:1 or less
Noise Figure	1.5dB typical @25C
Amplifier Filter Topology	Antenna-LNA1-BPF1-LNA2-cable-SMA(m) connector. Due to a topology without front end filter immediately following the antenna, the antenna has the benefit of a lower noise figure, but may not be suitable for collocation with a high power wireless transceiver.
Characteristic impedance	50 Ohm
Antenna base and radome color	Black
Antenna dimensions	1.7 (L) x 1.4 (W) x 0.55 (H) in. (44 x 36 x 14mm)
Operating temperature	–40° to 185°F (–40° to 85°C)
Operating frequency ranges	1574.42-1576.42 MHz
Polarization	RHCP **Note 2**
Maximum peak gain (at Boresight)	4 dBic
Shocks	50G
Drop test	10x3 axis / 1 meter drop 6 axis
Cable Length	17 foot (5.18 meters)
Mount Bracket	Metal
Anchor	1 inch. The anchor drill size is 3/16.
Screws	3 stainless-steel screws that are self-drilling pan head #2 Phillips.

Note 1: VSWR = voltage standing wave ratio.

Note 2: RHCP = right hand circularly polarized.

General Safety Precautions



Warning This warning symbol means danger. You are in a situation that could cause bodily injury. Before you work on any equipment, be aware of the hazards involved with electrical circuitry and be familiar with standard practices for preventing accidents. Use the statement number provided at the end of each warning to locate its translation in the translated safety warnings that accompanied this device. **Statement 1071**

Warning Do not work on the system or connect or disconnect cables during periods of lightning activity. **Statement 1001**

Warning Do not locate the outdoor antenna near overhead power lines or other electric light or power circuits, or where it can come into contact with such circuits. When installing the antenna, take extreme care not to come into contact with such circuits, as they may cause serious injury or death. For proper installation and grounding of the antenna, please refer to national and local codes (for example, U.S.:NFPA 70, National Electrical Code, Article 810, Canada:Canadian Electrical Code, Section 54). **Statement 1052**

Warning In order to comply with FCC radio frequency (RF) exposure limits, antennas should be located at a minimum of 7.9 inches (20 cm) or more from the body of all persons. **Statement 332**

Note For your safety, and to help you achieve a good installation, please read and follow these safety precautions.

Mast Mounted or Building Mounted Installations

The following instructions are common to most mast mounted or building mounted installations. For specific installation instructions for each antenna, see the antenna data-sheet and the router hardware installation guide.

- Find someone to help you—installing an antenna is often a two-person job.
- Select your installation site with safety, as well as performance, in mind. Remember that electric power lines and phone lines look alike. For your safety, assume that any overhead line can kill you.
- Contact your electric power company. Tell them your plans and ask them to come look at your proposed installation.
- Do not use a metal ladder.
- Do not work on a wet or windy day.
- Do dress properly—wear shoes with rubber soles and heels, rubber gloves, and a long-sleeved shirt or jacket.
- If the assembly starts to drop, move away from it and let it fall. Because the antenna, mast, cable, and metal guy wires are all excellent conductors of electrical current, even the slightest touch of any of these parts to a power line completes an electrical path through the antenna and the installer.
- If any part of the antenna system should come in contact with a power line, do not touch it or try to remove it yourself. Call your local power company to have it removed safely.
- If an accident should occur with the power lines, call for qualified emergency help immediately.
- Assemble your new antenna on the ground or a level surface at the installation site.
- Connect its coaxial cable while you are on the ground and attach the antenna to the mast.

- Ensure that the mast does not fall as you raise or remove it. Use a durable non-conductive rope secured at each two foot level as the mast is raised. Have an assistant tend the rope, ready to pull the mast clear of any hazards (such as power lines) should it begin to fall.
- Use the mounting bracket provided with the antenna.
- If the installation will use guy wires:
  - Install guy anchor bolts.
  - Estimate the length of guy wire and cut it before raising the mast.
  - Attach guy wires to a mast using guy rings.
  - In the case of a guyed (tall, thin mast) installation, you must have at least one assistant to hold the mast upright while the guy wires are attached and tightened to the anchor bolts.
- Attach a “DANGER” label at eye level on the mast.
- Install ground rods to remove any static electricity buildup and connect a ground wire to the mast and ground rod. Use ground rods designed for that purpose, not a spare piece of pipe.

Unused Antenna Ports

Port plugs must be installed in any unused antenna ports.

The weatherproof caps on the connectors protect the router interior from environmental elements including water, heat, cold, and dust. They are installed on unused ports before the router is shipped.

When you install a new antenna in a port with an N-connector:

- Chassis-mounted antennas—Remove the weather proof cap before installing a chassis-mounted antenna.
- External antennas—Remove weatherproof cap, then connect the supported Cisco cable to the connector.

Guidelines to Achieving Optimal RF and Antenna Performance

Antennas are a critical component of a wireless communication system. Selecting a suitable antenna, an optimal antenna location, or antenna site is essential for optimum performance of a wireless links.

This section covers general tips for optimizing RF performance of indoor and outdoor terrestrial radio systems in the 400-7125 MHz frequency range. Examples of terrestrial radio systems include 4G LTE, 5G NR, Wi-Fi, LoRa, LR-WPAN and similar. In this context GPS SPS would not be considered a terrestrial system as the signal is received from space, not from another terrestrial site.

Because the antenna transmits and receives radio signals over the air, overall RF performance of the link is susceptible to RF obstructions and common sources of RF interference that can reduce throughput and range of the system.

Follow these guidelines to optimize performance. When in doubt, consult a qualified RF professional, and check with your solution partner for specific recommendations.

Antenna Model Selection and Performance

Consider the following when planning your installation:

- When selecting the antenna, ensure that it covers the frequency ranges or frequency bands of interest, and that it has good RF parameters such as antenna efficiency, VSWR and suitable radiation pattern for every frequency range that your application will use with this antenna.
- Antenna pattern is important. Omni-directional antennas have lower gain, but allow communicating to devices in all azimuth directions. Directional antennas concentrate the beam in a specific direction, making them ideal for point to point communication.
- When a system has multiple RF ports for receive and / or transmit, as is the case for 4G LTE , 5G NR or Wi-Fi, it is highly recommended to populate all the RF ports with suitable antennas to take advantage of MIMO, rather than rely on a single port or single antenna to save on cost. Please see the MIMO section for a detailed description of MIMO benefits.
- For RF systems that support multiple RF ports and multiple RF standards such as LTE, Wi-Fi, and GPS: consider using a multi-element antenna that integrates multiple antennas under the same radome (cover). Doing so may reduce cost compared to deploying and mounting a discrete single port antenna for every RF port.
- For communication between fixed infrastructure devices, such as mesh nodes or a point-to-point backhaul link, each device should have an antenna with the same polarization. If communicating with mobile devices that might be randomly oriented, consider dual-polarized antennas, such as those with both vertical and horizontal or slant +45° and -45° polarized elements.

Antenna Environmental Specifications

The selected antenna must have suitable mechanical and environmental specifications for the environment where it will be deployed. For example, shock and vibration specifications for transportation, corrosion resistant construction for marine and oil and gas industries, or IP (ingress protection) rating for outdoor deployment. Indoor antennas are typically not suitable for harsh industrial environments. Please check with your system integrator for environmental requirements for your application.

Antenna Accessories and Mounting

Consider the following when planning your installation:

- Carefully consider what type of other RF accessories, besides antenna, such as RF cables, lightning arrestors or RF adapters may be required in your installations. It is best to minimize long RF cable runs due to RF signal losses in the cable. Thinner RF cables have more RF loss , thicker cables are less flexible and more expensive.
- Carefully consider how the antenna will be physically mounted, as this may affect antenna selection. For example, a stud mount mechanical mounting design is a better fit for mounting on top of an electrical cabinet than a mast mount antenna.
- For outdoor deployments, follow installation instructions for the antenna. It is good practice to keep protective covers on the radio’s RF ports and any antenna or accessory RF ports until the moment the interfaces are mated. This reduces chances of contamination, trapping water or condensation inside the connector, or accidental damage to RF interfaces.

MIMO Performance and Arrays

MIMO systems deliver benefits of higher SNR, higher reliability and higher throughput compared to single antenna systems. In more technical terms, MIMO delivers array gain, diversity gain and multiplexing gain compared to single antenna.

- Array gain — Improvement in SNR (signal to noise ratio) by coherently combining signals from multiple antennas. For example, increasing SNR through beamforming techniques.
- Diversity gain — Improvement in reliability by mitigating deep fading or strong destructive EM wave interference. For example, in a two-antenna system, if one antenna is experiencing deep fading due to an EM destructive null at its location at a given instant, the other antenna is unlikely to have a null at the same instant, and the combined SNR stays at a reliable level. In contrast, a single antenna would see SNR oscillating between good SNR and very poor SNR and reliability would degrade.
- Multiplexing gain — Increase in system capacity or throughput by sending independent data over multiple spatial streams simultaneously. The number of streams cannot be more than the number of antennas. For example, to support three spatial streams, a minimum of three antennas is required. Often there may be additional antennas for diversity or redundancy, such as in the case of 4x4:3, or 4x4 MIMO with 3 spatial streams.

If deploying multiple single-element antennas for a MIMO system in an array, ensure sufficient spacing between the antennas. Omnidirectional elements should generally be at least one wavelength apart at the lowest operating frequency.

Consider the following:

- For Wi-Fi systems operating in the 2.4, 5, and/or 6 GHz bands, space elements at least 5 inches (12.5 cm) apart.
- For 4G LTE and 5G systems with the lowest operating frequency of 617 MHz , space elements at least 20 inches (50 cm) apart.
- Note that spacing between elements inside multi-element MIMO antennas is often less than one wavelength. However multi-element antennas are engineered with MIMO performance in mind, by providing antenna diversity through pattern, polarization, and isolation between MIMO elements.

Antenna siting and location

Consider the following when planning your installation:

- Plan antenna location ahead of time. Ideal location for an antenna is in LOS (line of sight) of the counterpart that it is trying to communicate with. Under LOS conditions the signals propagate directly between the two communication nodes, without relying on signal bouncing off a wall or other structure to reach the counterpart. This is sometimes not possible to achieve in practice, but it is a useful goal to keep in mind when optimizing antenna location.
- While it is good to keep RF cables short, it is most desirable for an antenna to be in the best location it can be to provide the desired coverage.
- For large deployments involving multiple units communicating with each other across a complex urban or industrial landscape, consider running an RF propagation modeling study to predict approximate simulated coverage maps and determine initial placement of the units. A propagation study may help reduce overall deployment cost by discovering and mitigating issues with RF coverage before the infrastructure is physically installed.
- Keep the antenna away from metal obstructions such as heating and air-conditioning ducts, large ceiling trusses, building superstructures, and major power cabling runs. One exception is if the antenna is designed to be mounted on a ground plane. If mounting on a ground plane, mount the antenna on a flat metal surface away from adjacent obstructions.

- It is strongly recommended not to install antennas directly on the router or access point (AP), unless the router or AP is specifically engineered to directly mount the antennas. Products that are engineered for direct mounting of antennas specifically address each of the below issues.
- Reasons to mount antennas away from the router include:
  - Router location may not be optimal location for antenna to communicate with the counterpart wirelessly, so router and antenna may need to be in different locations.
  - Router may have a clutter of Ethernet cable and power cables around it, which will obstruct antenna signal.
  - A number of routers, such as the IR1835, are modular. They have plug-in RF modules for Wi-Fi , 4G LTE or 5G NR such as WP-WIFI6, P-LTEAP18-GL, P-5GS6-GL. These modules have RF connectors spaced close together, and while it is mechanically possible to install four or five antennas directly attached, this will result in significant degradation to RF performance of antennas due to mutual de-tuning between closely spaced antennas. It is strongly recommended to install antennas away from the chassis in modular cases.
- If installing an antenna indoors, consider that the density and electromagnetic properties of the materials used in the building construction determines the number of walls the signal can pass through and still maintain adequate coverage.
  - Paper and vinyl walls have very little effect on signal penetration.
  - Solid and pre-cast concrete walls limit signal penetration to one or two walls without degrading coverage.
  - Concrete and wood block walls limit signal penetration to three or four walls.
  - A signal can penetrate five or six walls constructed of drywall or wood.
  - A thick metal wall causes signals to reflect off, causing poor penetration.
  - A chain link fence or wire mesh spaced between 1 and 1 1/2 in. (2.5 and 3.8 cm) acts as a harmonic reflector that blocks a 2.4-GHz radio signal.
  - Install the antenna away from microwave ovens and 2-GHz cordless phones. These products can cause signal interference because they operate in the same frequency range as the device your antenna is connected to.

Installing the Cisco Active GPS Antenna

This section contains the following:

Installation Guidelines for the Cisco Active GPS Antenna

- The antenna must be placed so that the radome has a clear site to just above the horizon and a clear view of the horizon.
- Antenna performance can be adversely affected by the surrounding environment such as physical obstructions or radio frequency (RF) interference.

- Avoid mounting the antenna next to a column or vertical support that could create a shadow zone and reduce the coverage area.
- Keep the antenna away from reflective metal objects that block cellular signal and make reception poor, such as heating and air conditioning ducts, large ceiling trusses, building superstructures, and major power cabling runs. If necessary, use an extension cable to relocate the antenna away from these obstructions.
- If installing the antenna indoors, make sure it is near a window.

Note The Cisco logo and product ID are printed onto the GPS-ACT-ANTM-SMA antenna radome. Position the antenna as shown in the following graphic.

Figure 361: Wall-Mounted Antenna

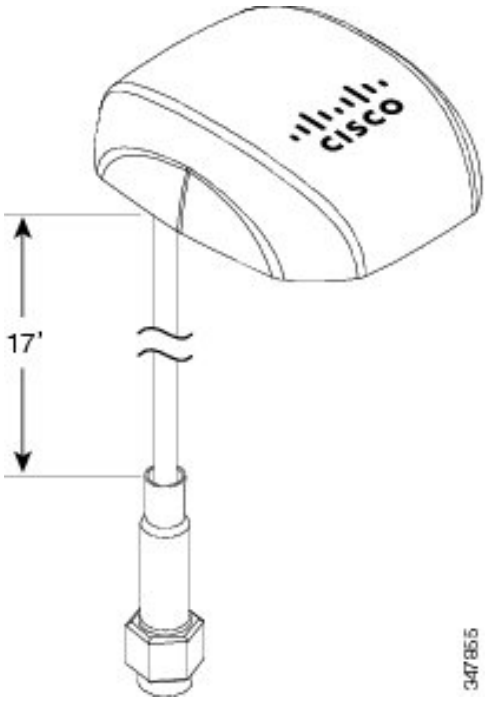

Mounting the Cisco Active GPS Antenna Without Bracket

Attach the antenna radome to any magnetic metal surface or stick the antenna radome onto a non-metalic surface using the sticky back.

Mounting the Cisco Active GPS Antenna With the Bracket

1. Use the supplied metal bracket, screws and wall anchors (if necessary) to mount the antenna to a wall.
2. Insert the cable through the hole on top of the bracket and seat the antenna radome on the bracket.

Figure 362: Attaching the Antenna Wall-mount

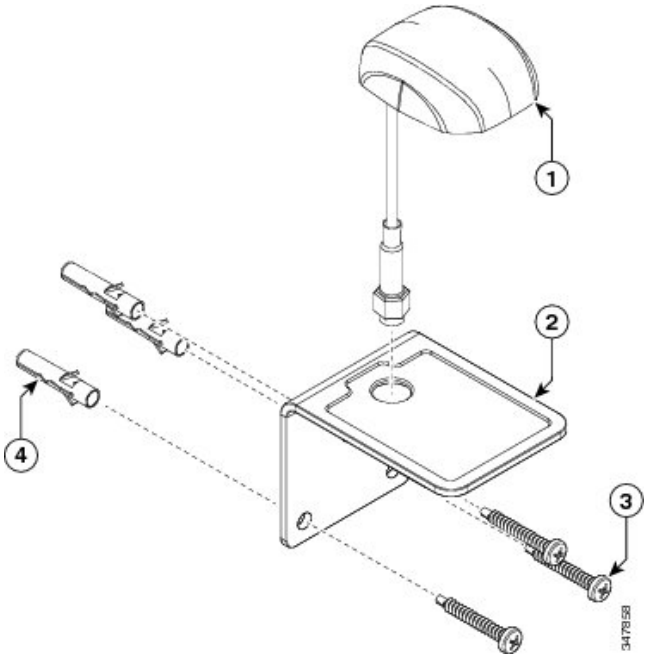

Communications, Services, and Additional Information

- To receive timely, relevant information from Cisco, sign up at Cisco Profile Manager.
- To get the business impact you're looking for with the technologies that matter, visit Cisco Services.
- To submit a service request, visit Cisco Support.
- To discover and browse secure, validated enterprise-class apps, products, solutions, and services, visit Cisco DevNet.
- To obtain general networking, training, and certification titles, visit Cisco Press.
- To find warranty information for a specific product or product family, access Cisco Warranty Finder.

Cisco Bug Search Tool

Cisco Bug Search Tool (BST) is a web-based tool that acts as a gateway to the Cisco bug tracking system that maintains a comprehensive list of defects and vulnerabilities in Cisco products and software. BST provides you with detailed defect information about your products and software.

Documentation Feedback

To provide feedback about Cisco technical documentation, use the feedback form available in the right pane of every online document.

Cisco Support Community

Cisco Support Community is a forum for you to ask and answer questions, share suggestions, and collaborate with your peers. Join the forum at https://supportforums.cisco.com/index.jspa.

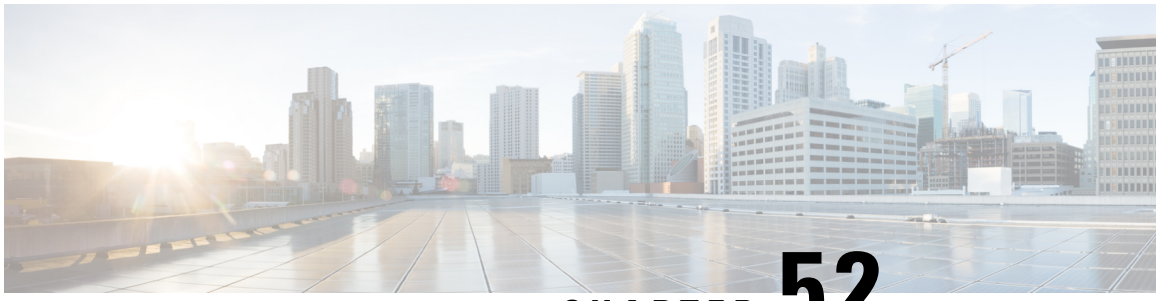

CHAPTER 52

Cisco 2.4/5/6 GHz Tri-Band Omnidirectional Antenna (IW-ANT-OMH-2567-N)

This chapter contains the following sections:

- Overview, on page 851
- Specifications, on page 853
- Radiation Patterns, on page 854

Overview

The Cisco 2.4/5/6 GHz Tri-Band Omnidirectional Antenna (IW-ANT-OMH-2567-N) is especially designed to complement interior or exterior mounted wireless network systems.

The integrated male N(m) connector is embedded in the antenna base cap for direct mounting to the chosen AP. The ingress protection rating of this antenna element permits either upright or inverted orientation in outdoor locations. The antenna may also be pole-mounted when separation from the AP is required for optimum positioning.

The IW-ANT-OMH-2567-N is a self-identifying antenna having circuitry that enables supported Cisco access points (APs) to self-identify the antenna. This antenna has a built-in EEPROM that the APs read to automatically configure the antenna type and the gain in the wireless controller.

The following figure shows the IW-ANT-OMH-2567-N:

Figure 363: IW-ANT-OMH-2567-N

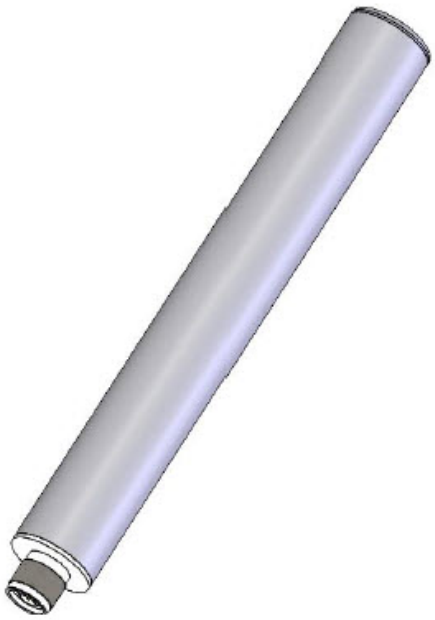

The following figure shows the mechanical diagram and mounting instructions:

Figure 364: IW-ANT-OMH-2567-N Mechanical Diagram

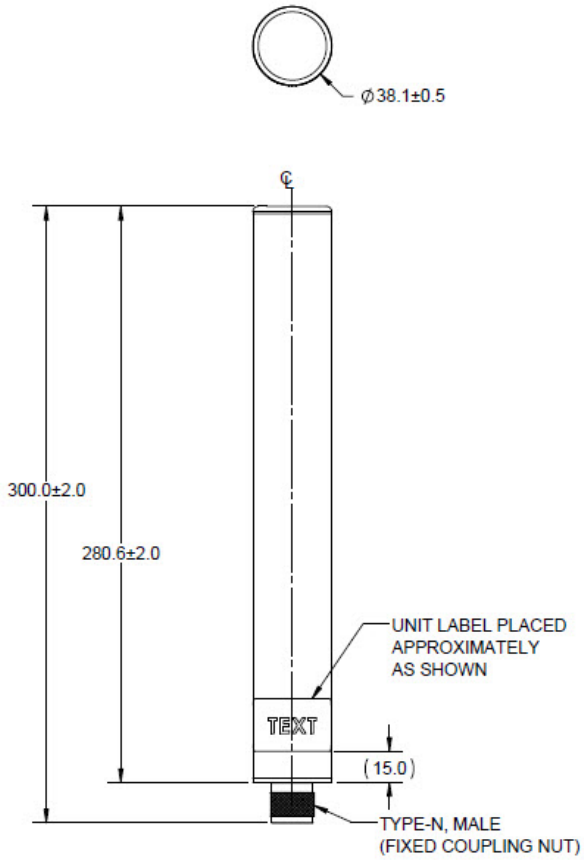

Specifications

This section provides tables that show the antenna specifications.

Table 77: Mechanical Specifications

Cisco PID	IW-ANT-OMH-2567-N
Characteristic Impedance	50 Ohm
Antenna Type	Dipole
Polarization	Linear, Horizontal
Maximum Input Power	2 W
Operational Temperature	-40 to +70 °C
Storage Temperature	-40 to +85 °C

Ingression Protection	IP67
Weight	168g (0.37 lb)
Wind Loading, (survival)	165 mph

Table 78: Electrical Specifications

Operating Frequency	2400-2484 MHz	4900-4990 MHz	5170-5330 MHz	5490-6875 MHz
VSWR, Max	2.5:1	2.2:1	2.8:1	2.8:1
Peak Gain, Max	4 dBi	7 dBi	7 dBi	7 dBi
Average Gain, Near Horizon	2.5+/-0.5 dBi	4.5+/-1 dBi	4.0+/-1 dBi	3.5+/-1 dBi
Elevation Plane 3 dB Beamwidth	62°	31°	29°	26°
Azimuth Plane 3 dB Beamwidth	Omni-directional			

Radiation Patterns

This section shows the various radiation patterns for the antenna at different frequencies.

2400 - 2484 MHz

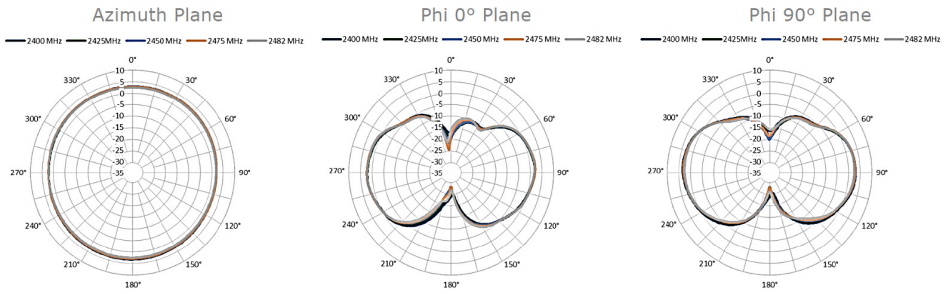

4900 - 4990 MHz

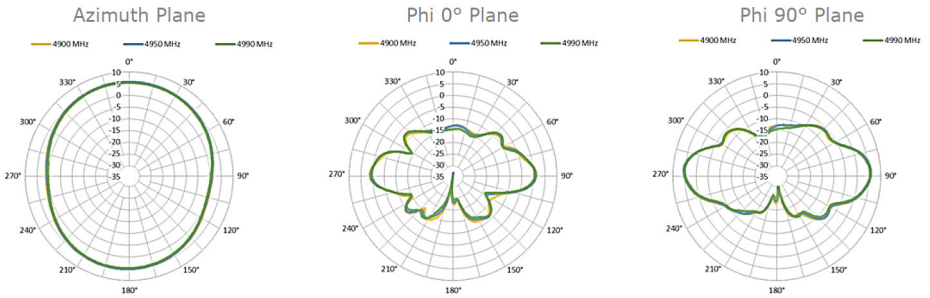

5170 - 5300 MHz

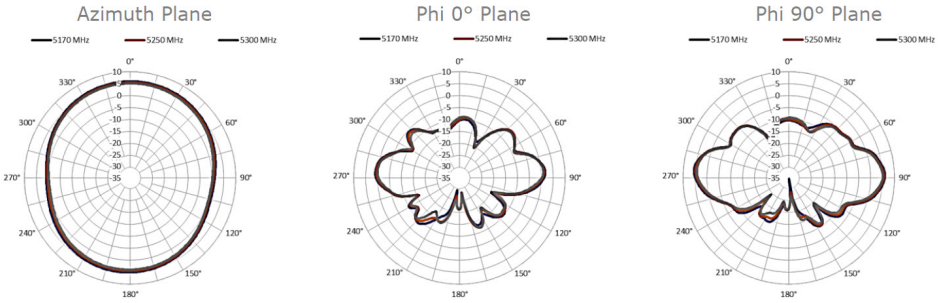

5490 - 5900 MHz

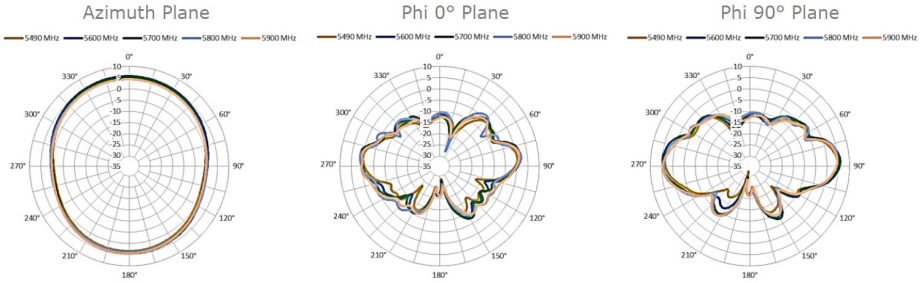

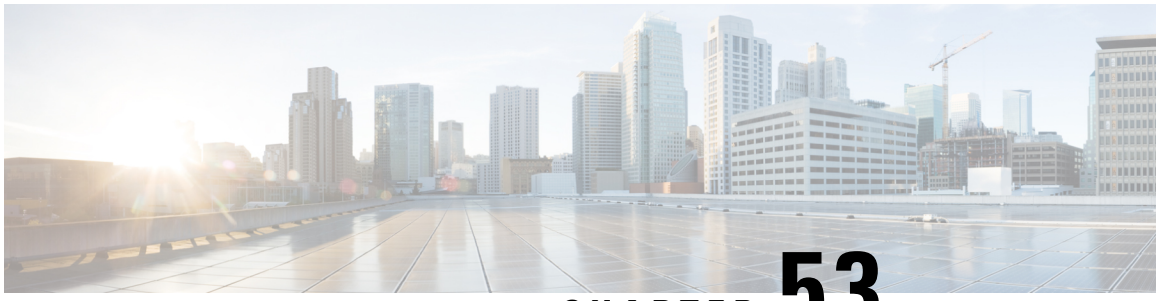

CHAPTER 53

Cisco 2.4/5/6 GHz Tri-Band Omnidirectional Antenna (IW-ANT-OMV-2567-N)

This chapter contains the following sections:

- Overview, on page 857
- Specifications, on page 859
- Radiation Patterns, on page 860

Overview

The Cisco 2.4/5/6 GHz Tri-Band Omnidirectional Antenna (IW-ANT-OMV-2567-N), is especially designed to complement interior or exterior mounted wireless network systems.

The integrated male N(m) connector is embedded in the antenna base cap for direct mounting to the chosen AP. The ingress protection rating of this antenna element permits either upright or inverted orientation in outdoor locations. The antenna may also be pole-mounted when separation from the AP is required for optimum positioning.

The IW-ANT-OMV-2567-N is a self-identifying antenna having circuitry that enables supported Cisco access points (APs) to self-identify the antenna. This antenna has a built-in EEPROM that the APs read to automatically configure the antenna type and the gain in the wireless controller.

The following figure shows the IW-ANT-OMV-2567-N:

Figure 365: IW-ANT-OMV-2567-N

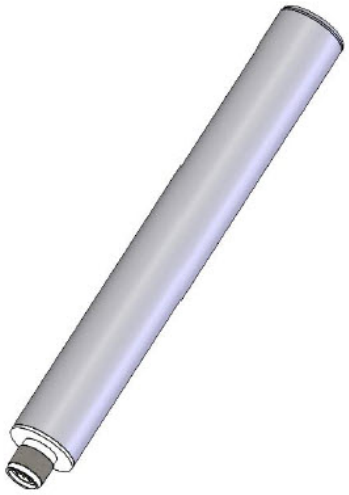

The following figure shows the mechanical diagram and mounting instructions:

Figure 366: IW-ANT-OMV-2567-N Mechanical Diagram

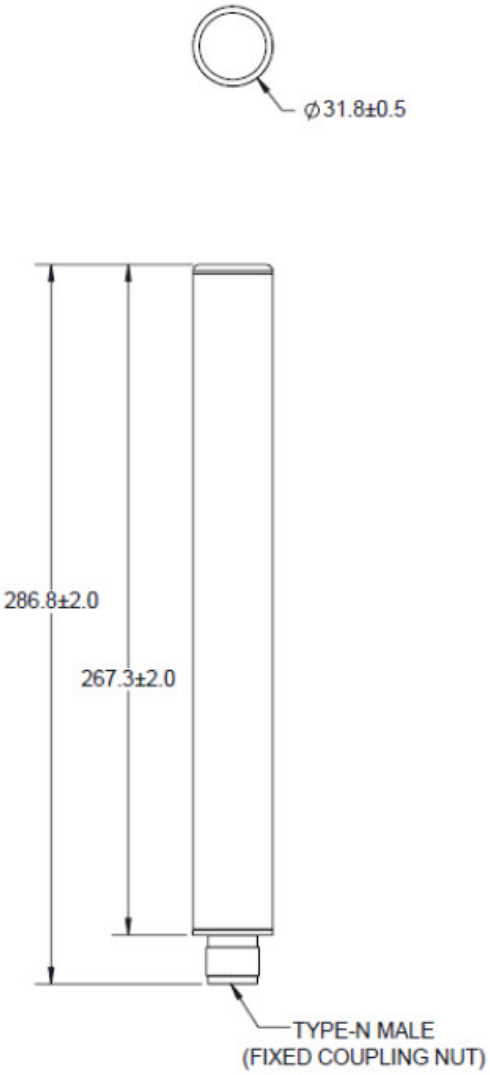

Specifications

This section provides tables that show the antenna specifications.

Table 79: Mechanical Specifications

Cisco PID	IW-ANT-OMV-2567-N
Characteristic Impedance	50 Ohm
Antenna Type	Dipole

Polarization	Linear, Vertical
Maximum Input Power	2 W
Operational Temperature	-40 to +70 °C
Storage Temperature	-40 to +85 °C
Ingression Protection	IP67
Weight	137g (0.3 lb)
Wind Loading, (survival)	165 mph

Table 80: Electrical Specifications

Operating Frequency	2400-2484 MHz	4900-4990 MHz	5170-5330 MHz	5490-6875 MHz
VSWR, Max	2.5:1	2.2:1	2.0:1	2.0:1
Peak Gain, Max	4 dBi	7 dBi	7 dBi	7 dBi
Average Gain, Near Horizon	3.5+/-0.5 dBi	5.0+/-1.0 dBi	4.0+/-1.0 dBi	5.5+/-1.0 dBi
Elevation Plane 3 dB Beamwidth	37°	23°	22°	20°
Azimuth Plane 3 dB Beamwidth	Omni-directional			

Radiation Patterns

This section shows the various radiation patterns for the antenna at different frequencies.

2400-2484 MHz

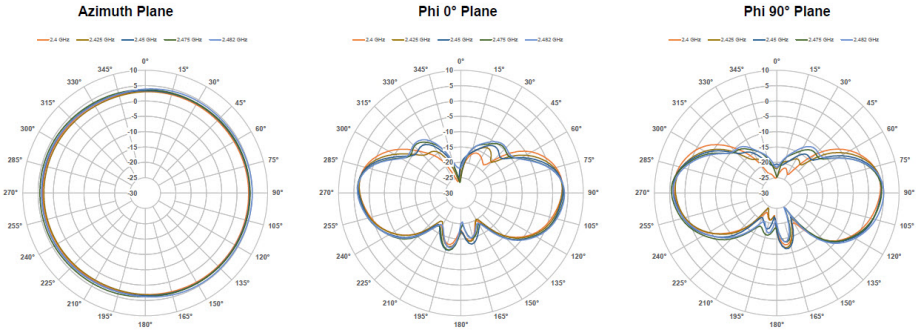

4900-4990 MHz

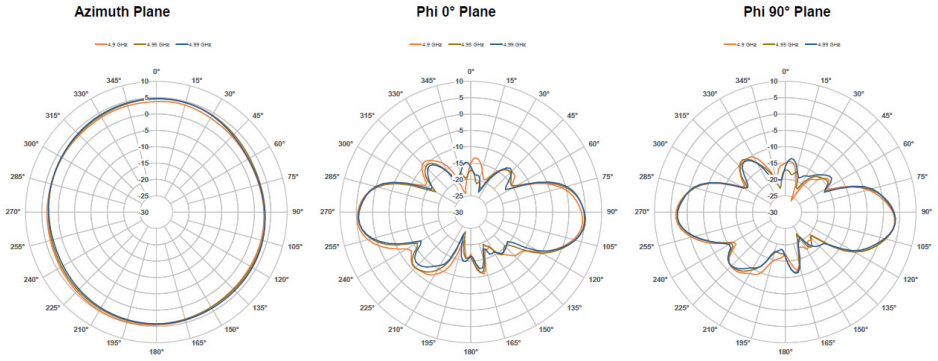

5170-5330 MHz

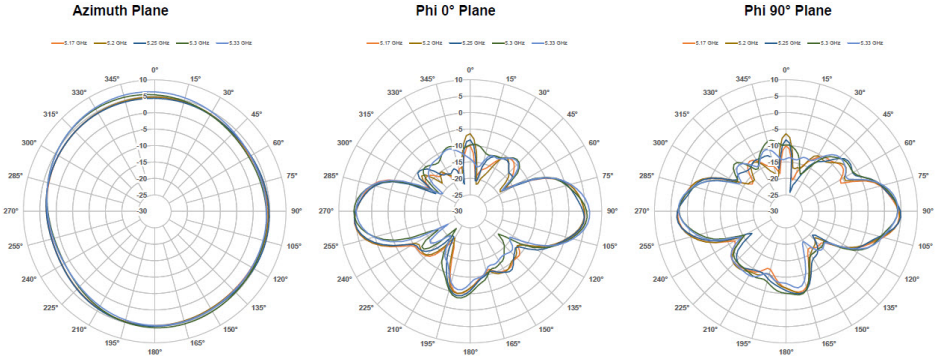

5490-5900 MHz

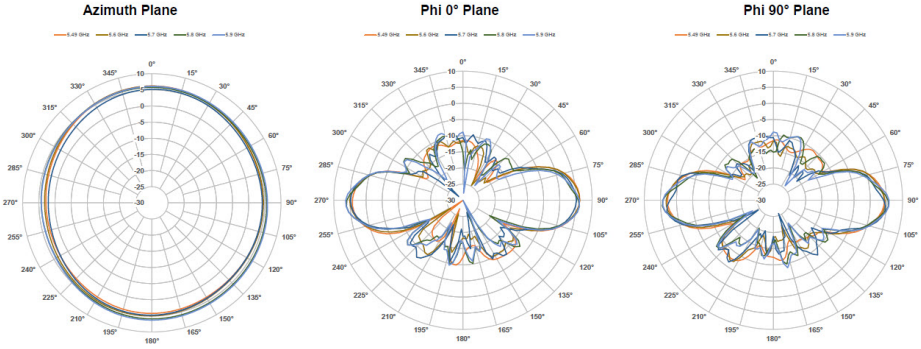

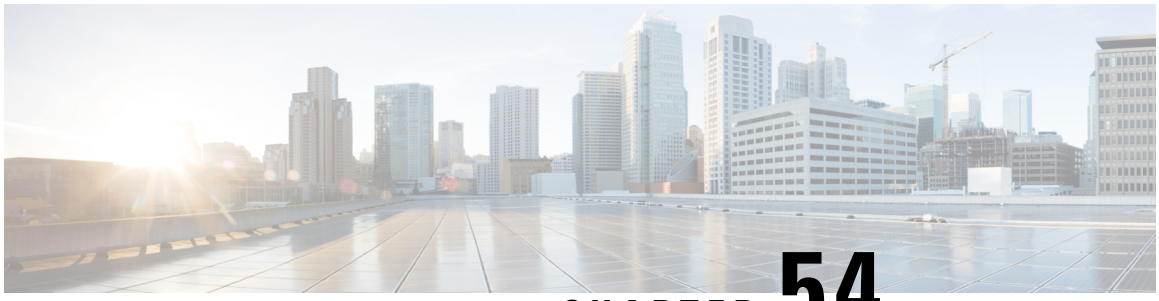

CHAPTER 54

Cisco Antenna Mount, L Bracket, V-Bolt, Electrogalvanized (IW-ACCMK-OMHV)

This chapter contains the following sections:

- (IW-ACCMK-OMHV) Mounting Kit Overview, on page 863

(IW-ACCMK-OMHV) Mounting Kit Overview

The Cisco Antenna Mount, L Bracket, V-Bolt, Electrogalvanized (IW-ACCMK-OMHV) mounting kit is designed for installing the IW-ANT-OMV-55-N and IW-ANT-OMH-55-N antennas.

The kit contains the following:

- Bracket x 1
- U-Bolts x2
- Flat washers x 4
- Hex nuts x4

Use the following figures as a source of reference for installing and using the mounting kit:

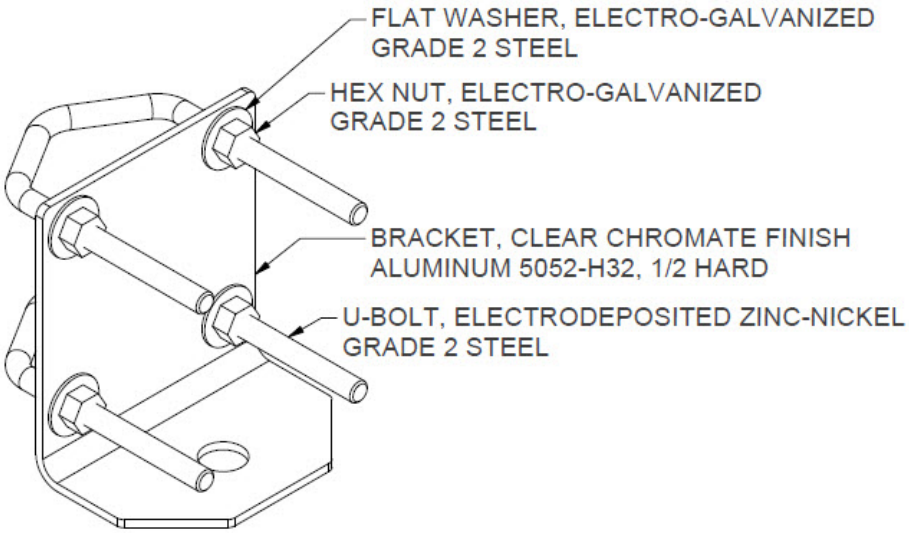
FLAT WASHER, ELECTRO-GALVANIZED
GRADE 2 STEEL
HEX NUT, ELECTRO-GALVANIZED
GRADE 2 STEEL
BRACKET, CLEAR CHROMATE FINISH
ALUMINUM 5052-H32, 1/2 HARD
U-BOLT, ELECTRODEPOSITED ZINC-NICKEL
GRADE 2 STEEL

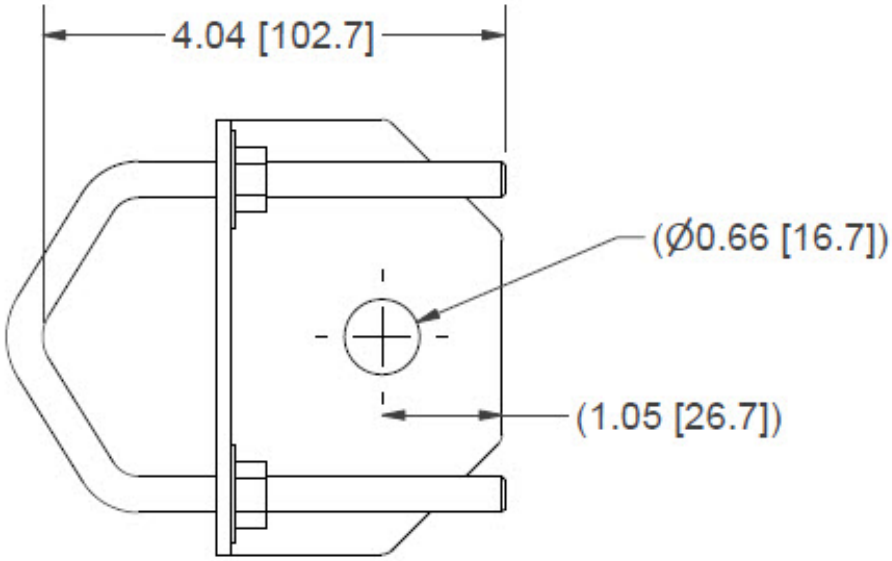
4.04 [102.7]
(Ø0.66 [16.7])
(1.05 [26.7])

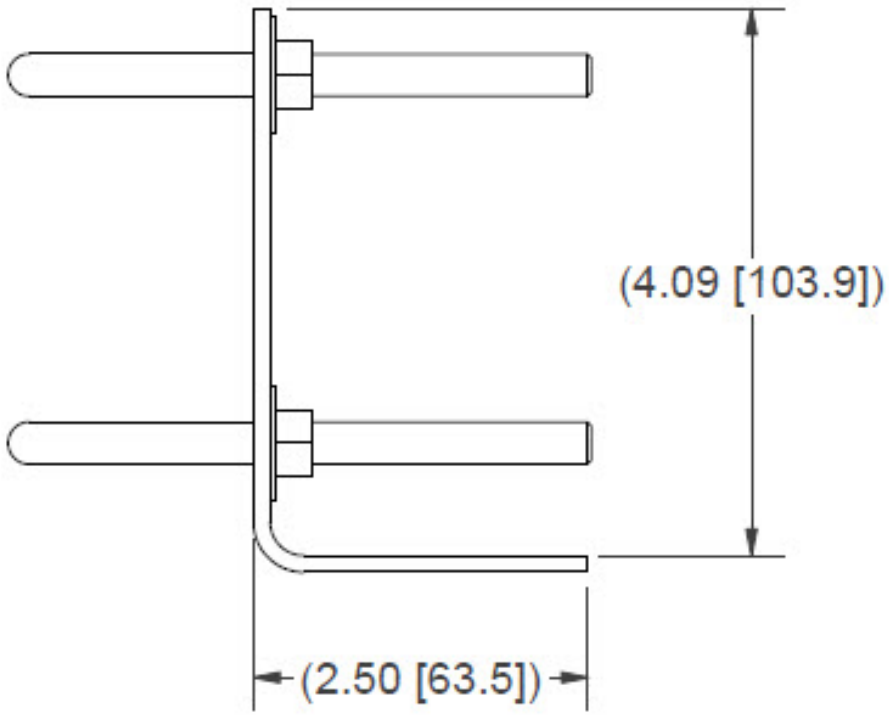
(4.09 [103.9])
(2.50 [63.5])

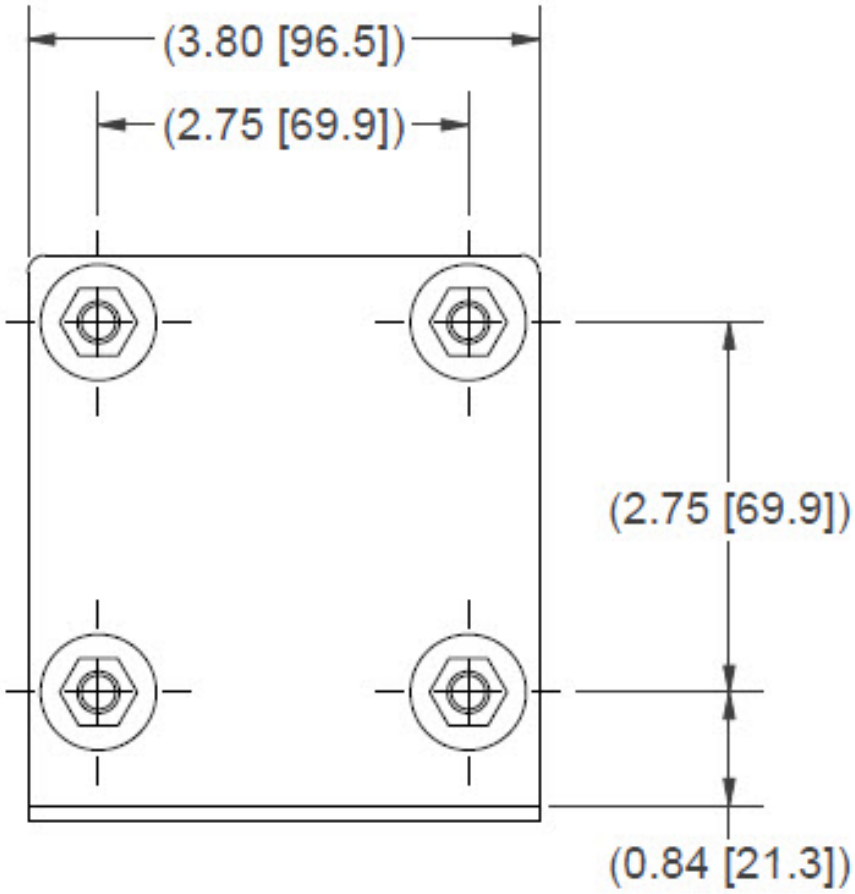
(3.80 [96.5])
(2.75 [69.9])
(2.75 [69.9])
(0.84 [21.3])

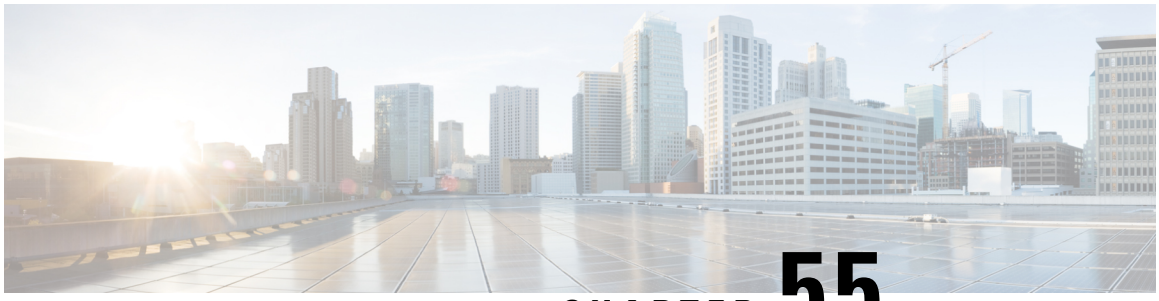

CHAPTER 55

Cisco Flat Panel Base Station Dual-Slant Polarization Antenna (IW-ANT-DS9-516-N)

This chapter contains the following sections:

- Overview, on page 867
- Electrical Specifications, on page 868
- Mechanical Specifications, on page 869
- Environmental Specifications, on page 869
- Mechanical Drawing, on page 870
- Installation Instructions, on page 871
- Radiation Patterns, on page 871

Overview

The Cisco Dual Slant Polarization Base Station Antenna (IW-ANT-DS9-516-N) is designed to cover a frequency range of 4.9 to 5.95 GHz.

Figure 367: IW-ANT-DS9-516-N Antenna



The IW-ANT-DS9-516-N can be used for Point-to-Multipoint, where the installation requires a sector antenna on the AP to support Dual Slant panel antennas on the clients.

Electrical Specifications

The following table is a summary of the electrical specifications:

Antenna Type	Dual Slant Polarization Base Station
Frequency Range	4.9 - 5.95 GHz
Input Impedance	50 Ω
Gain	16.0 dBi (min) 16.5 dBi (typ)

VSWR	1.7:1 (typ) 2:1 (max)
Polarization	Dual Linear ±45º
-3dB Elevation Beamwidth	6º (typ)
-4dB Azimuth Beamwidth	90º (typ)
EL Upper Side Lobe Level	-11 dB (typ)
F/B Ratio	25 dB (typ)
Cross Polarization	-15 dB (typ)
Port to Port Isolation	25 dB(typ) 22 dB (min)
Power	20W (max)
Elevation Null Fill	1ST -10 dB (typ)
Lightning Protection	DC Grounded

Mechanical Specifications

The following table is a summary of the mechanical specifications:

Dimensions (L x W x D)	550 x 250 x 17mm (max)
Weight	2.5 kg (max)
Radome Material	Plastic
Base Plate Material	Aluminum with chemical conversion coating
Connector type	2x N-Type Female

Environmental Specifications

The following table is a summary of the mechanical specifications:

Test	Standard	Duration	Temperature	Notes
Low Temperature	IEC 68-2-1	72 hours	-55° C	—
High Temperature	IEC 68-2-2	72 hours	+71° C	—
Temperature Cycling	IEC 68-2-14	1 hour	-45°C +70°C	3 Cycles
Vibration	IEC 60721-3-4	30 min/axis	—	Random 4M5

Test	Standard	Duration	Temperature	Notes
Mechanical Shock	IEC 60721-3-4	4M3	—	4M5
Humidity	ETSI EN300-2-4 T4.1E	144 hours	—	95%
Water Tightness	IEC 529	—	—	IP67
Solar Radiation	ASTM G53	2000 hours	—	—
Flamibility	UL 94	—	—	Class HB
Salt Spray	IEC 68-2-11 Ka	500 hours	—	—
Ice and Snow	—	—	—	25mm Radial
Wind Speed	—	—	—	Survival 220 Km/h Operation 160 Km/h

Mechanical Drawing

The following diagram provides mechanical details of the antenna.

Note All measurements are in millimeters.

Figure 368: Mechanical Drawing

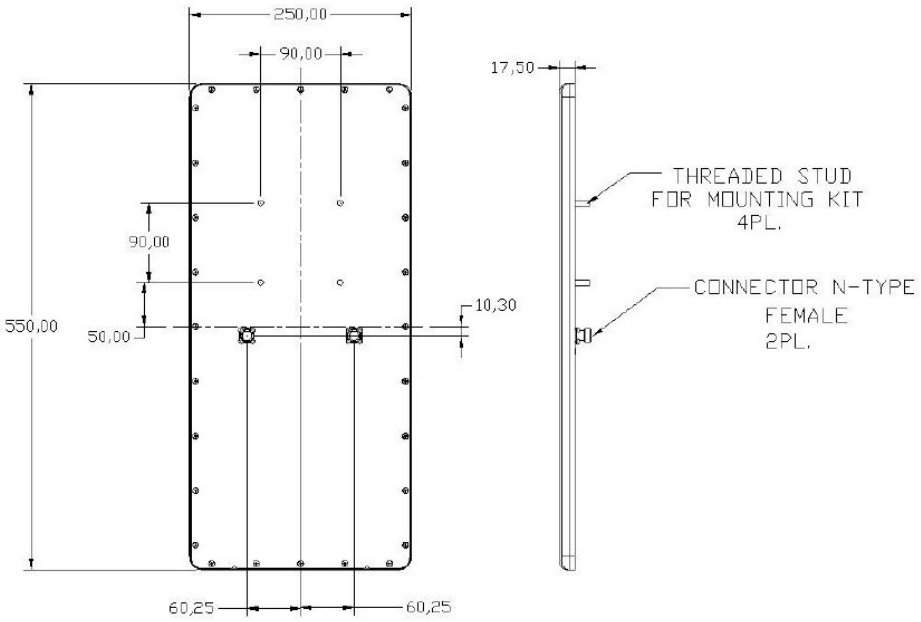

Installation Instructions

This antenna uses the INSTALLATION INSTRUCTIONS FOR MT-120019. Follow the link for complete installation instructions.

Radiation Patterns

The following figures show the antenna radiation patterns.

Note The IW-ANT-DS9-516-N is designed to cover a frequency range of 4.9 to 5.95 GHz. The following graphs show the 5.25 GHz frequency range as a reference to understand the pattern.

Figure 369: AZIMUTH RADIATION PATTERN MIDBAND FREQ. 5.25 GHZ

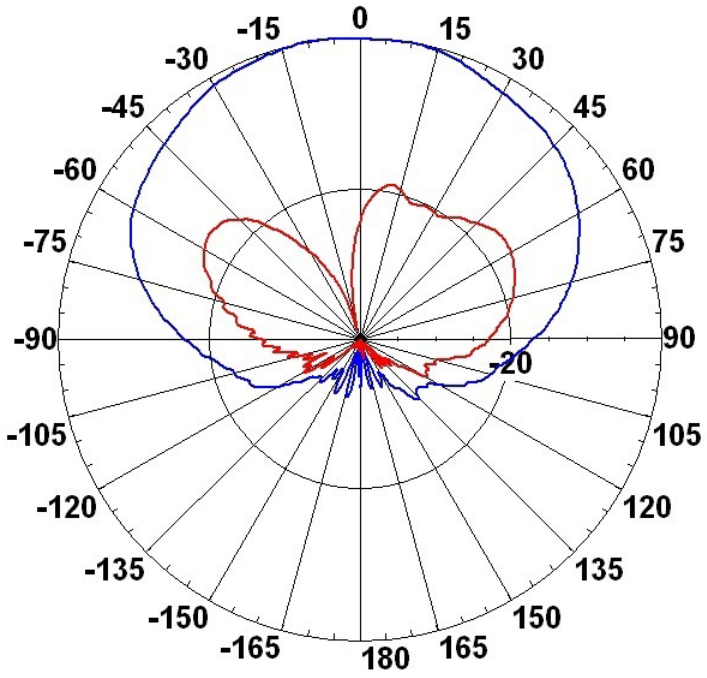

Figure 370: ELEVATION RADIATION PATTERN MIDBAND FREQ. 5.25 GHZ

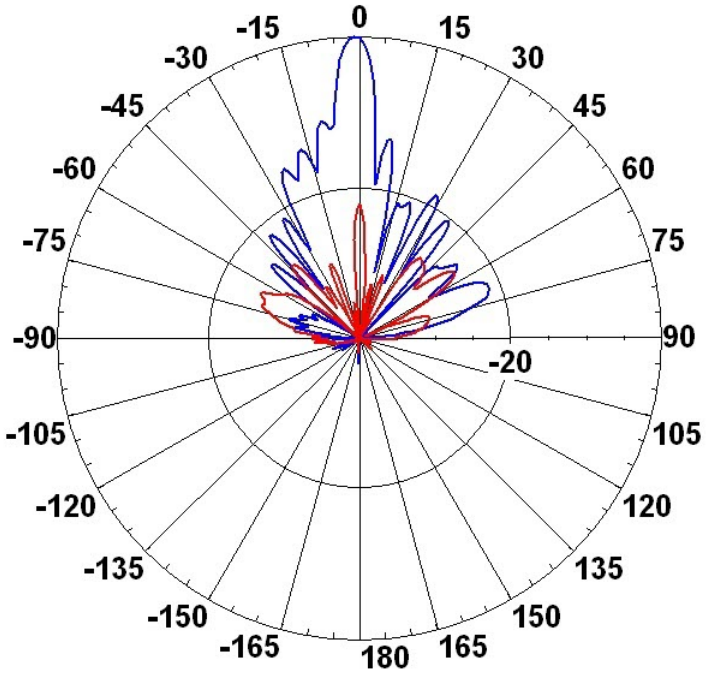

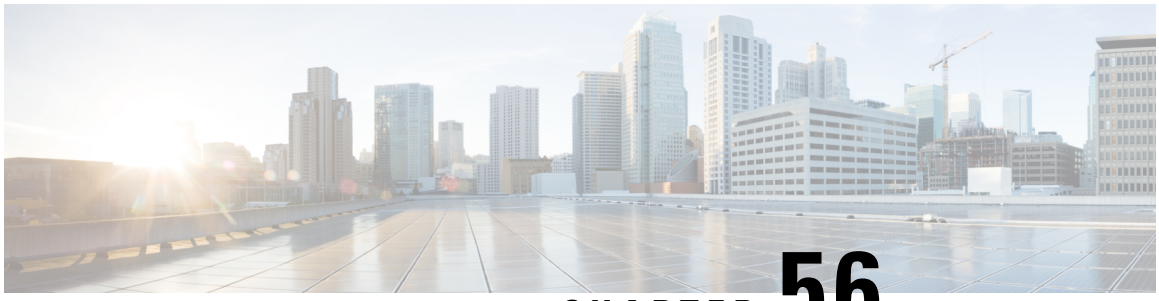

CHAPTER 56

Cisco indoor/outdoor, active GNSS antenna (IW-ANT-GNSS-SMA)

This chapter contains the following sections:

- Overview, on page 873
- Specifications, on page 874
- Mechanical Drawing, on page 875
- Standalone Antenna Performance, on page 876
- Radiation Patterns, on page 877
- Installation Instructions, on page 879

Overview

The Cisco indoor/outdoor, active GNSS antenna (IW-ANT-GNSS-SMA) can be physically connected to the Cisco Industrial Routers (IRs) and Cisco Industrial Wireless (IW) Access Points and Clients to receive GNSS broadcasts from satellites.

Figure 371: IW-ANT-GNSS-SMA Antenna



Features of the antenna include the following:

- LNA Gain: 26dB
- Current consumption: 9mA
- Cable: 3.05m RG-174, SMA-male
- Ingress protection: IP65
- Mounting with adhesive tape
- GPS, BeiDou, GLONASS, and Galileo satellite navigation systems

The packaging includes:

- 1 pcs antenna packed in a paper envelope

Specifications

The following table lists the antenna specifications.

Specification	Description
Frequency	1559 – 1610 MHz
Maximum RF input power	1 W (30 dBm)
Power Supply	3 – 5 VDC
Current (typical)	<12 mA +/- 2mA
Amplifier Gain (LNA Gain)	26 dB, +/- 2 dB
Characteristic Impedance (nominal)	50-ohms
Antenna Dimensions	2.1 x 1.2 x 0.26 in (53 x 30 x 6.6 mm)
Storage Temperature	-40 to +85 C
Operating Temperature	-40 to +85 C
Ingress Protection	IP65
Radome Material	PC + ABS
Coax Connector Type	SMA(m)
Coax Cable Length	10 ft (3.05 m)

Mechanical Drawing

The following figure shows the mechanical details of the antenna:

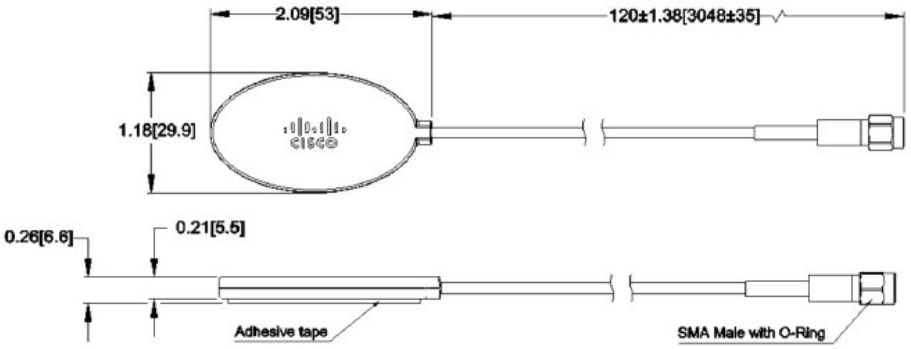

Standalone Antenna Performance

Figure 372: Antenna VSWR (Without LNA)

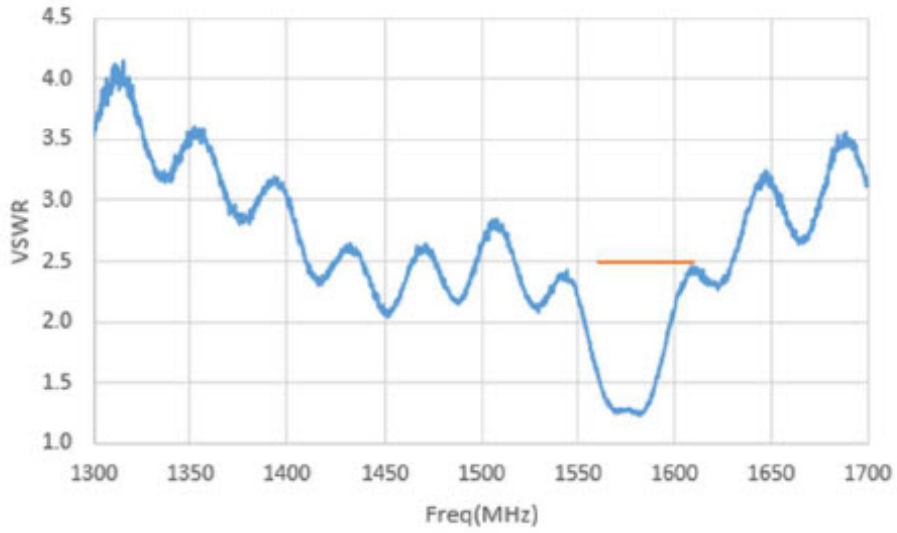

Figure 373: LNA Gain and out-of-band rejection

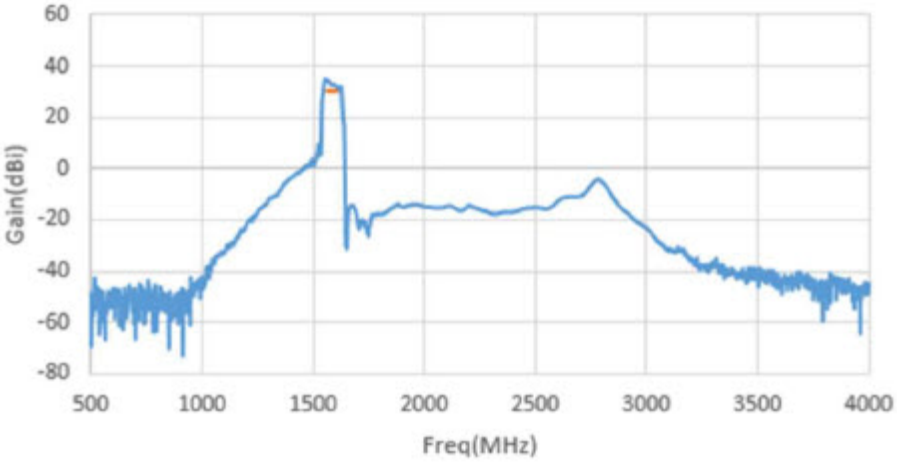

Figure 374: Antenna element Peak Gain (Without LNA)

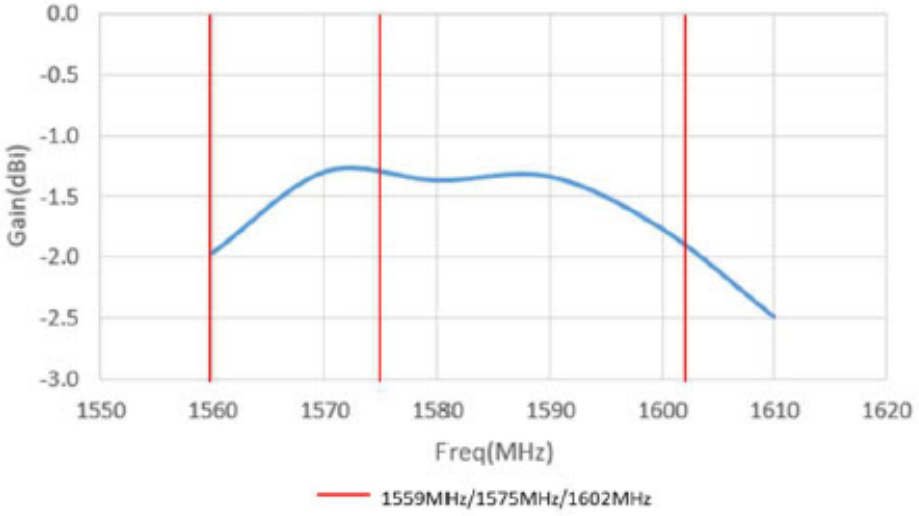

Figure 375: Antenna element Radiation Efficiency (Without LNA)

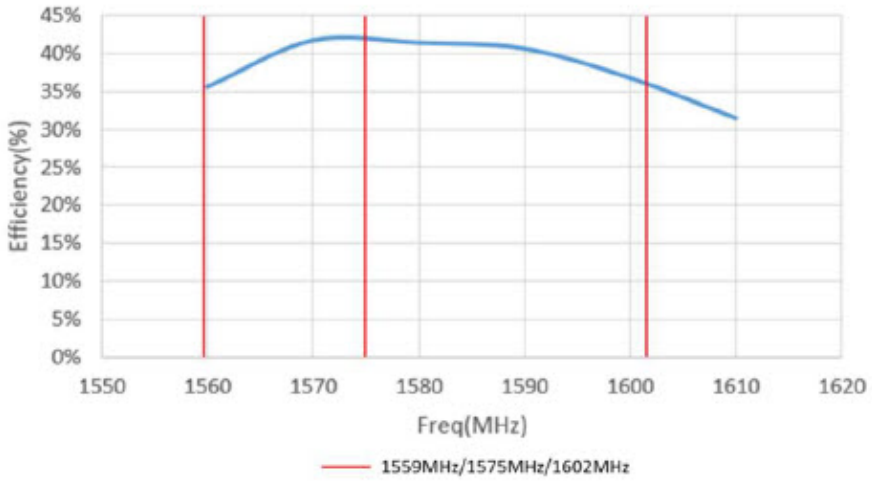

Radiation Patterns

This section contains the 2D radiation patterns of the antenna without LNA.

Figure 376: XY Plane

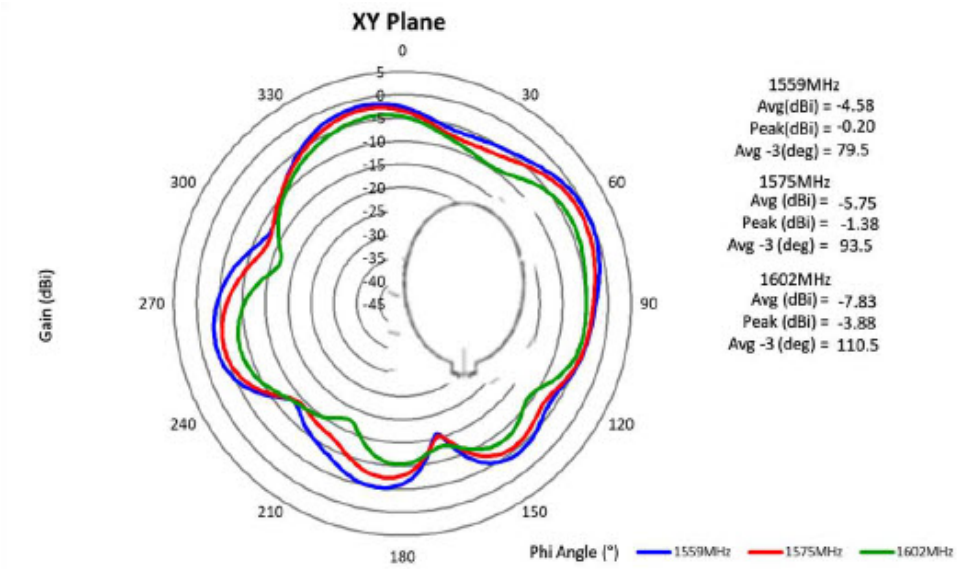

Figure 377: ZX Plane

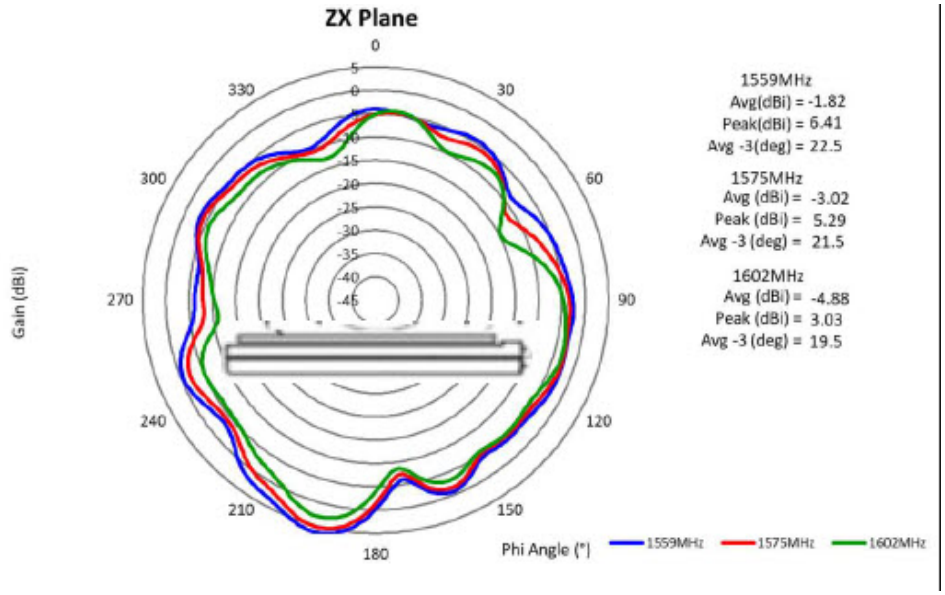

Figure 378: ZX Plane

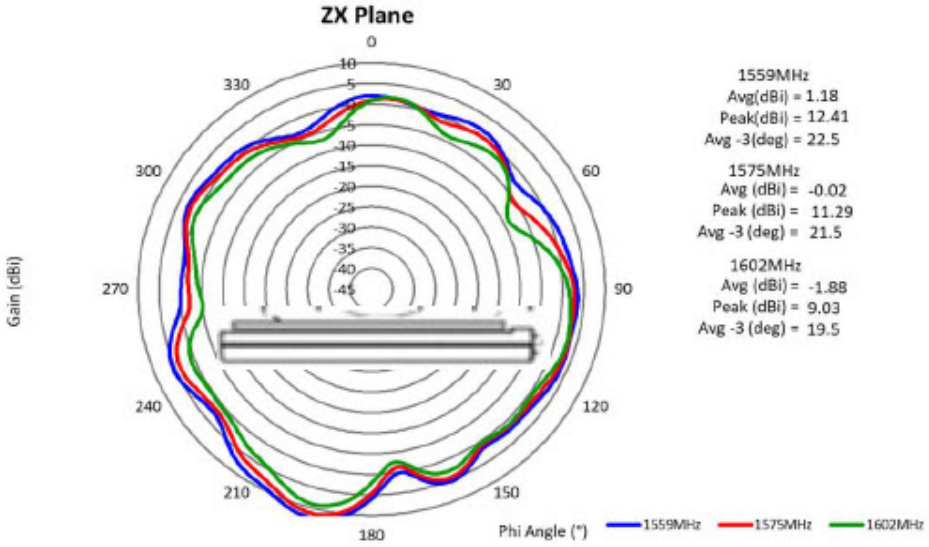

Installation Instructions

Use the following guidelines when installing the antenna:

- Identify a proper surface to place the antenna. The Cisco logo must face upward, towards the sky.
- Clean the surface of the mounting location before mounting the antenna.
- Remove the adhesive tape from the back of the antenna and press it firmly to the mounting surface.
- Using a properly calibrated torque wrench, attach the antenna SMA connector to the port of your device. The standard mating torque for SMA connectors is 3 – 5 in-lb (0.3 – 0.5 N-m).

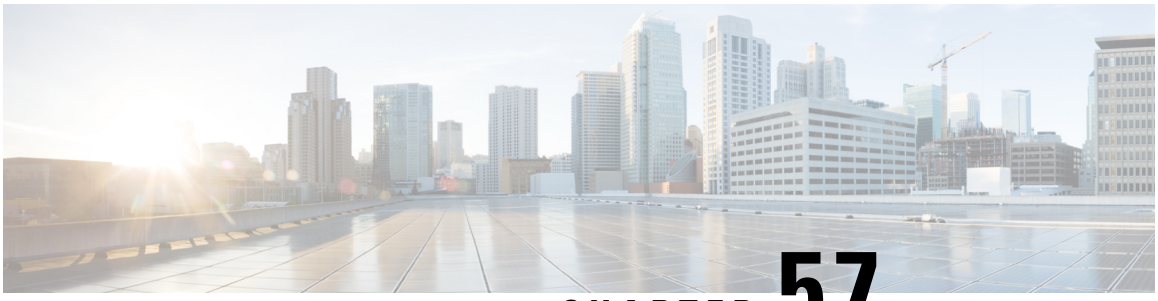

CHAPTER 57

Cisco Symmetrical Horn CC Antenna (IW-ANT-H90-510-N)

This chapter contains the following sections:

- Overview, on page 881
- Technical Specifications, on page 882
- Performance Specifications, on page 882
- Mechanical Drawing, on page 883
- Installation Instructions, on page 884
- Radiation Patterns, on page 890

Overview

The Cisco Symmetrical Horn CC Antenna (IW-ANT-H90-510-N) offers unique RF performance in a compact package. Scalar horn antennas have symmetrical main beam with identical beam width in Vertical and Horizontal plane. Exceptionally small side lobes ensure remarkable interference suppression. These antennas are ideal for coverage of areas with clients close to the installation site, where null zone issues exist. High density AP clusters and radio co-location is made possible due to unique radiation patterns and compact size.

These antennas feature multiple improvements of RF performance and design, namely, optically lighter body and significantly improved bracket. The antenna is equipped with N-female connectors.

Figure 379: IW-ANT-H90-510-N Antenna



Technical Specifications

The following table is a summary of the technical specifications:

Radio Connection	2x N Female Bulkhead Connector
Antenna Type	Horn
Materials	UV Resistant polycarbonate, Polypropylene, Aluminium, Zinc, Stainless Steel
Environmental	IP55
Flame Rating	UL 94 HB
Pole Mounting Diameter	30-80 mm (1.1-3.1 inch) Recommended as close to 80 mm (3.1 inch) as possible
Temperature	-30°C to +55°C (-22°F to +131°F)
Wind Survival	160 km/h (100 mi/h)
Wind Load	25/10 N - Front/Side at 160 km/h (100 mi/h)
Effective Projected Area	203/80 cm^2 - Front/Side (31.5/12.4 in^2)
Mechanical Tilt	± 25°
Weight	1.8 kg / 3.9 lbs

Performance Specifications

The following table is a summary of the performance specifications:

Frequency Range	5180 - 6400 MHz
Gain	9.6 dBi
Azimuth/Elevation BW -3 dB	H 67° / V 67°
Azimuth/Elevation BW -6 dB	H 90° / V 90°
Front-to-Back Ratio	28 dB
VSWR Max 5180-5850 MHz	1.6
VSWR Max 5850-6400 MHz	1.9
Beam Efficiency	92% **Note** Beam efficiency defined up to first null
Polarization	Dual Linear H + V
Impedance	50 Ohm

Mechanical Drawing

The following diagram provides mechanical details of the antenna.

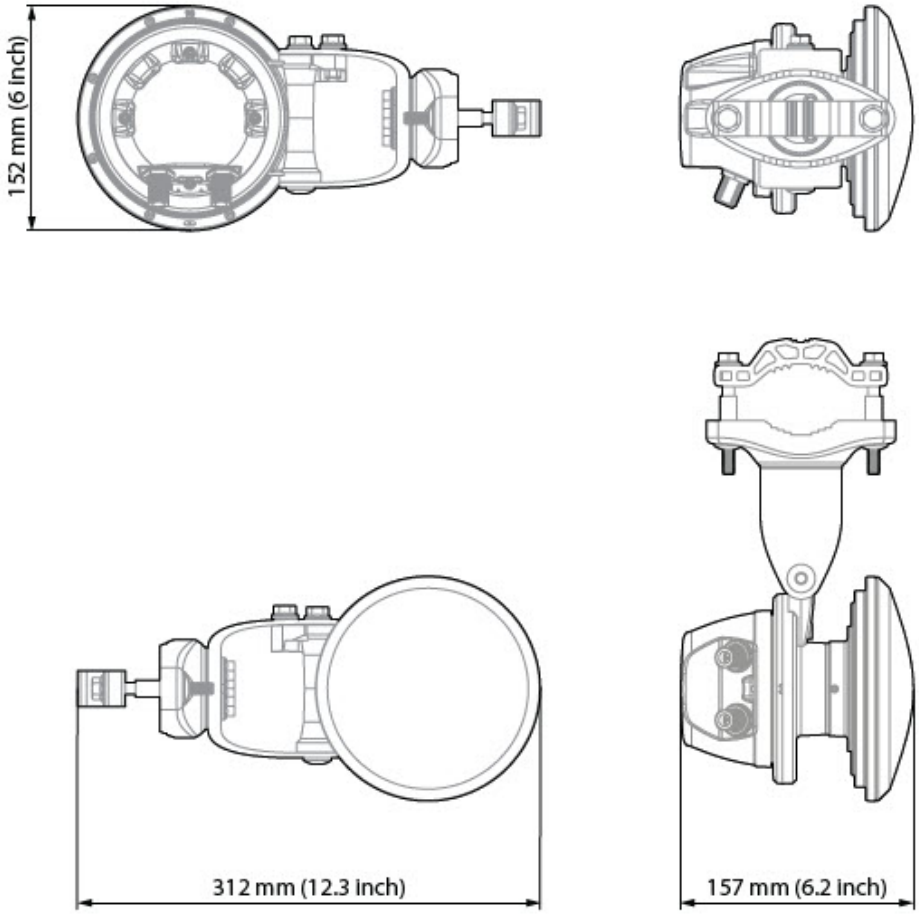

Installation Instructions

This section illustrates how to install the antenna on a pole.

The following figure shows the package contents:

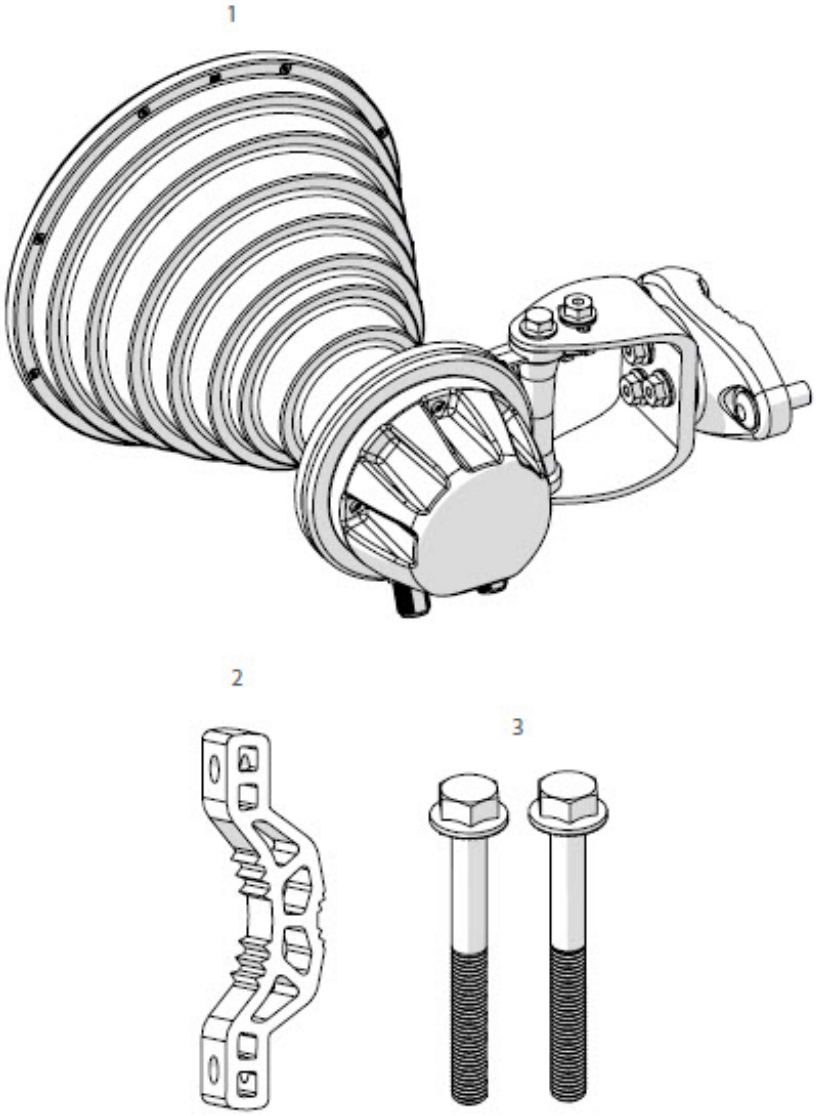

Number	Description	Quantity
1	SH-CC Body	1x
2	SH-CC Bracket	1x
3	M8 x 75mm Screw	2x

The antenna is pre-assambled for installation on the left side of the pole. If you need to install it on the right, see Swapping From Right or Left Sided Pole Mount below.

Step 1 Pole Mount Step 1

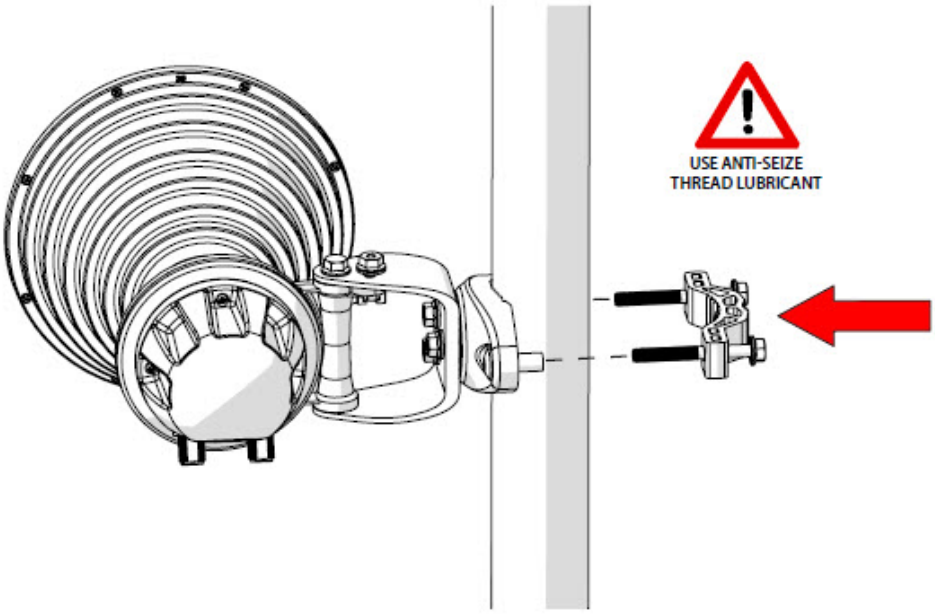

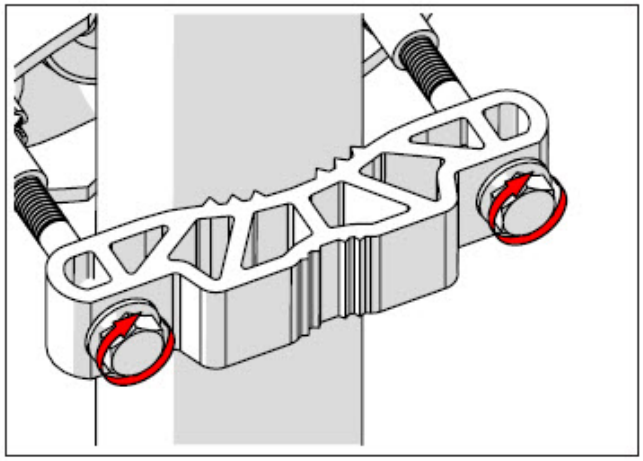

Step 2 Pole Mount Step 2

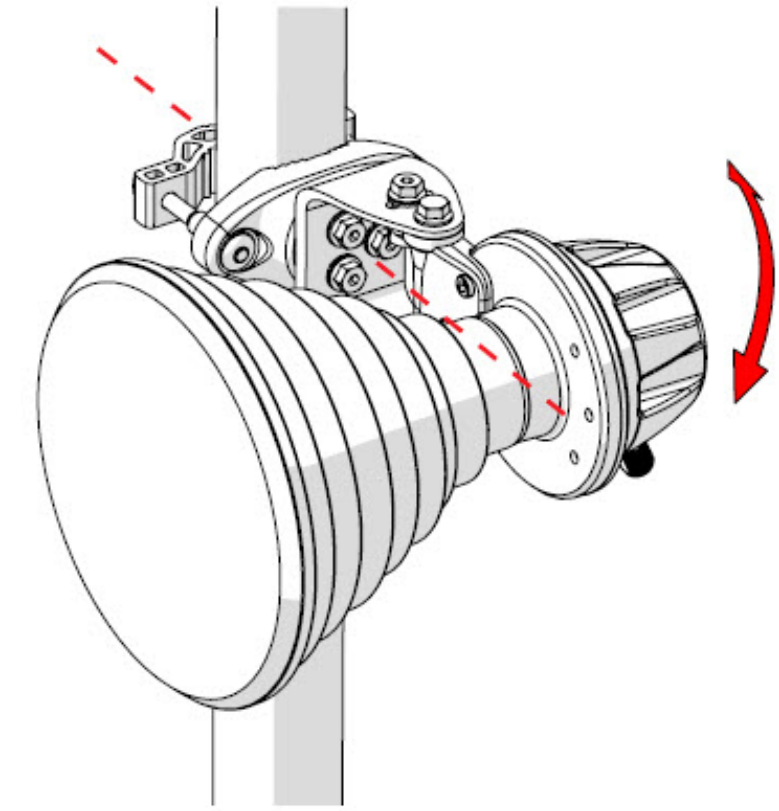

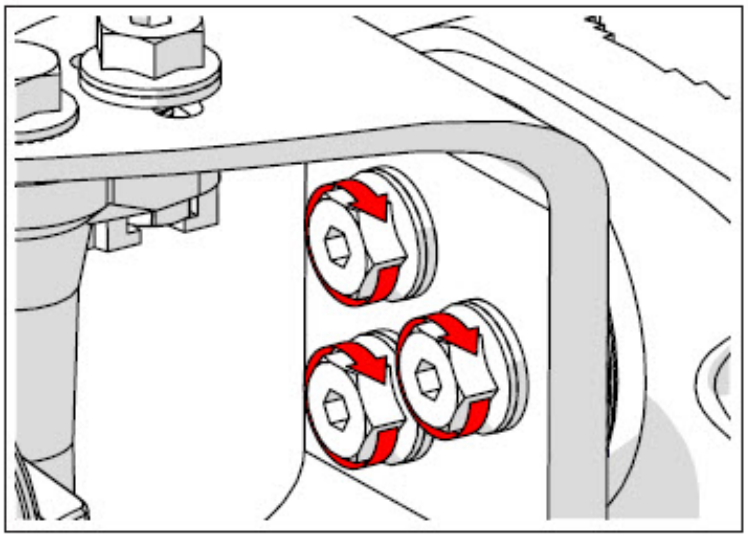

Step 3 Pole Mount Step 3

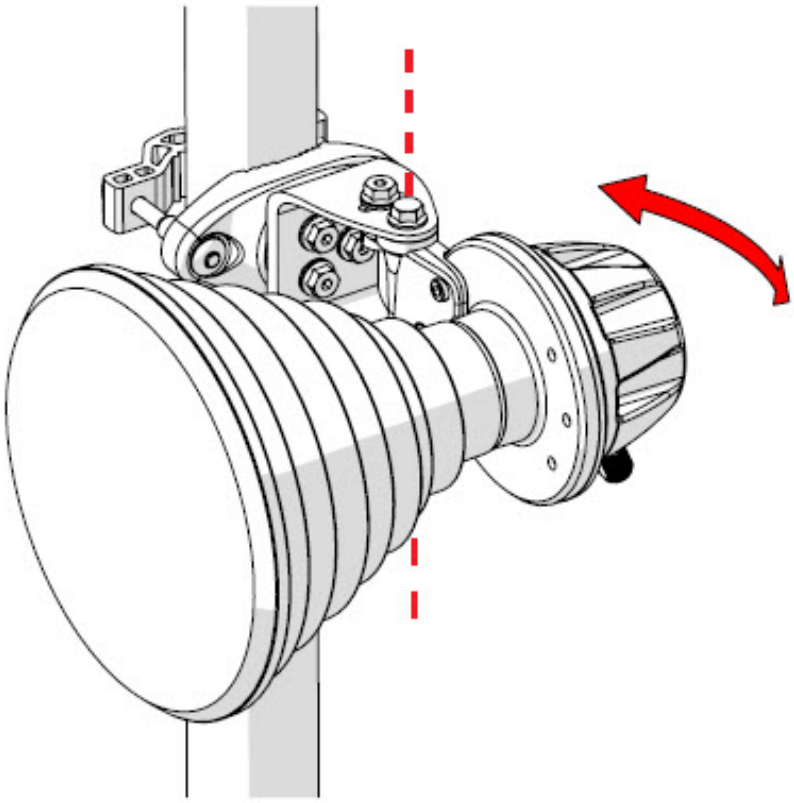

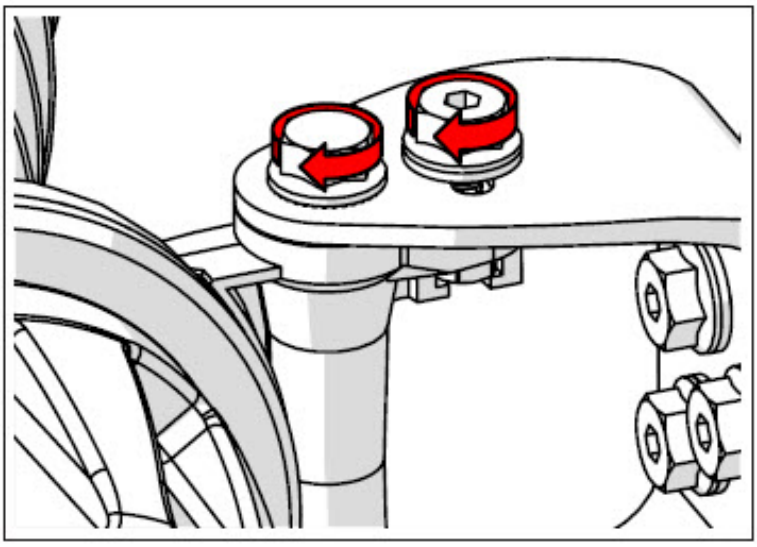

Step 4 Swapping From Right or Left Sided Pole Mount Step 1

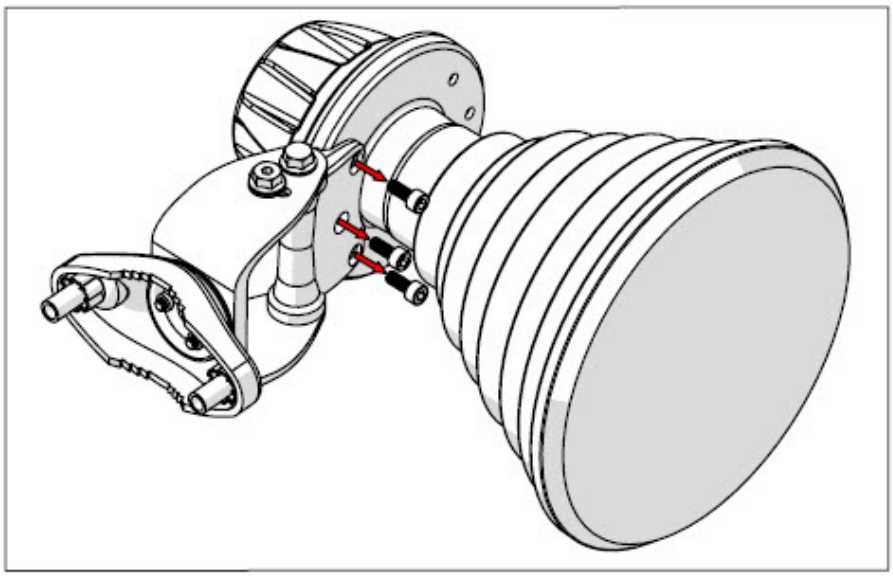

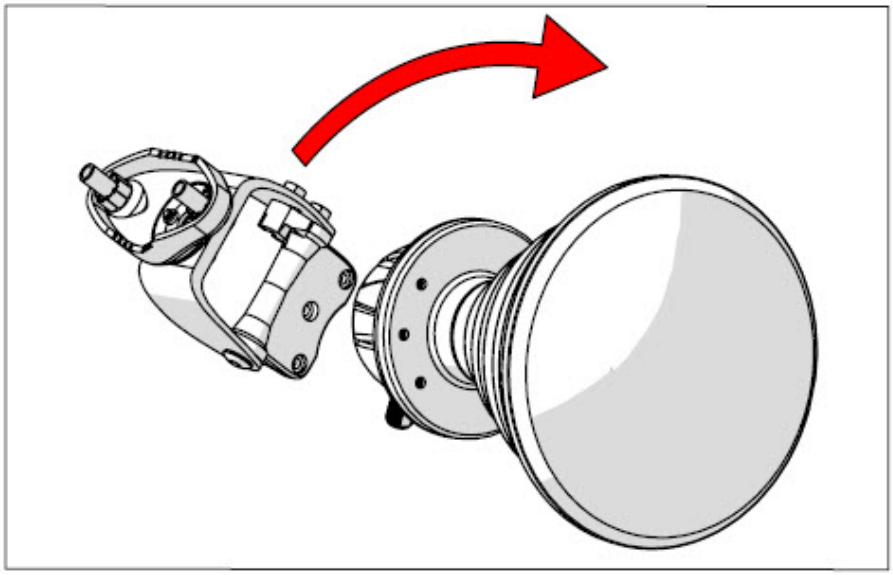

Step 5 Swapping From Right or Left Sided Pole Mount Step 2

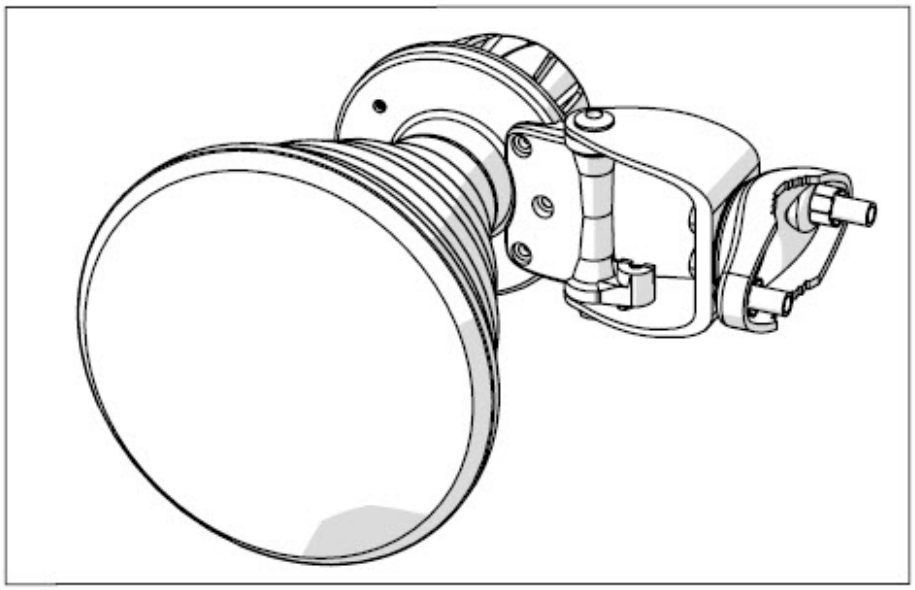

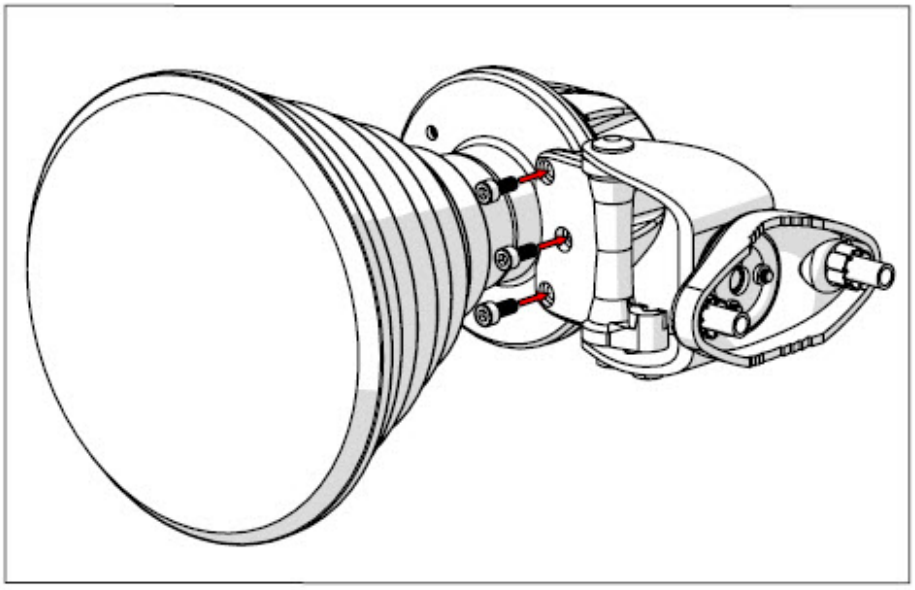

Radiation Patterns

The following figures show the antenna radiation patterns.

Figure 380: Azimuth

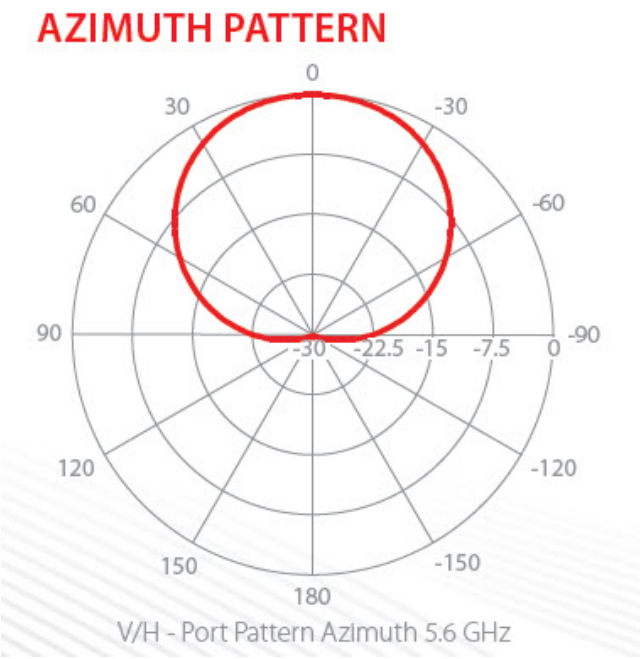

Figure 381: Elevation

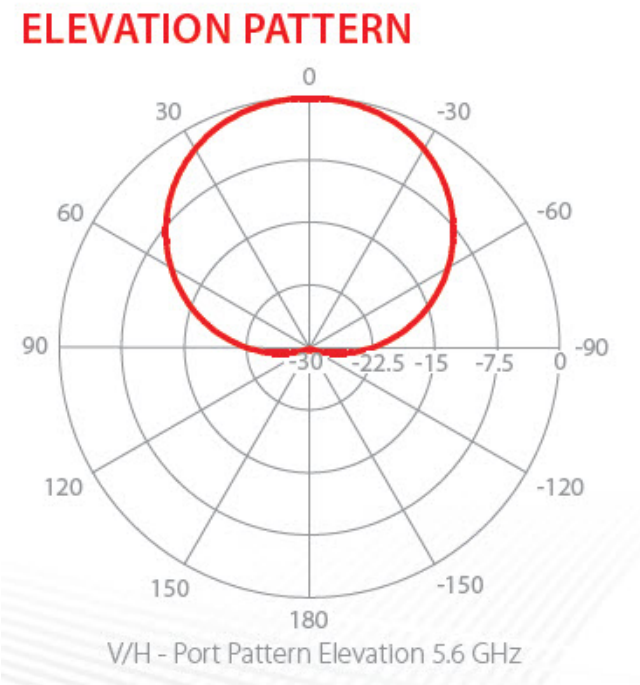

Figure 382: Gain

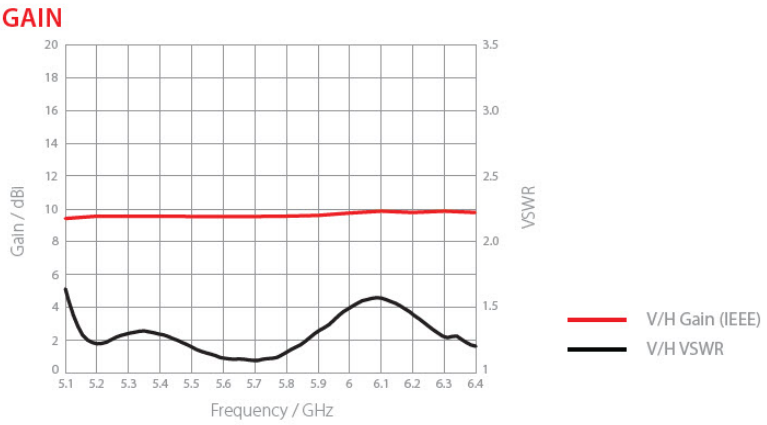

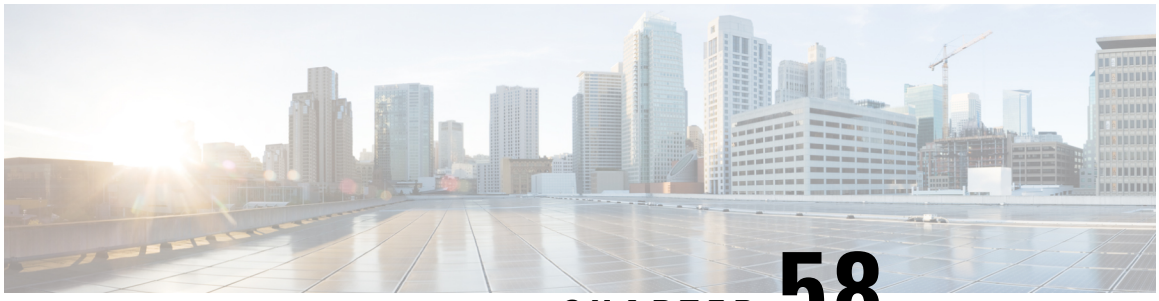

CHAPTER 58

Cisco Horizontally Polarized Omnidirectional Antenna (IW-ANT-OMH-55-N)

This chapter contains the following sections:

- Overview, on page 893
- Electrical Specifications, on page 894
- Mechanical and Environmental Specifications, on page 894
- Mechanical Drawing, on page 894
- Radiation Patterns, on page 895

Overview

The Cisco horizontally polarized omnidirectional antenna (IW-ANT-OMH-55-N) is designed for long-lasting operation with outdoor access points. Its rugged design withstands harsh environments, making the antenna ideal for industrial wireless, enterprise, and military applications. The antenna is DC grounded for ESD protection of radio components.

Figure 383: IW-ANT-OMH-55-N Antenna



Features include the following:

- UV-stable, white ruggedized plastic radome
- Chrome plated mounting base
- DC grounded design
- Fully sealed IP67 design

- Type N Female
- Wind rated 125 mph
- Temperature -40°C to +85°C

Electrical Specifications

The following table is a summary of the electrical specifications:

Typical VSWR	<2:1
Bandwidth	5.1-5.9 GHz
Nominal Impedance	50 Ω
Gain	5 dBi
Elevation Half Power Beamwidth	30°
Maximum Power	40 watts
Polarization	Horizontal

Mechanical and Environmental Specifications

The following table is a summary of the mechanical and environmental specifications:

Dimensions	1.26 OD x 6.55 L in (3.20 x 16.63 cm)
Weight	4 oz
Housing Material	White UV-stable ASA
Temperature Range	-40°C to +85°C
Bending Moment at Rated Wind	0.57 lbf-ft
Lateral Thrust at Rated Wind	2.1 lbf
Equivalent Flat Plate Area	0.030 ft^2

Mechanical Drawing

The following diagram provides mechanical details of the antenna.

Note All measurements are in inches/millimeters.

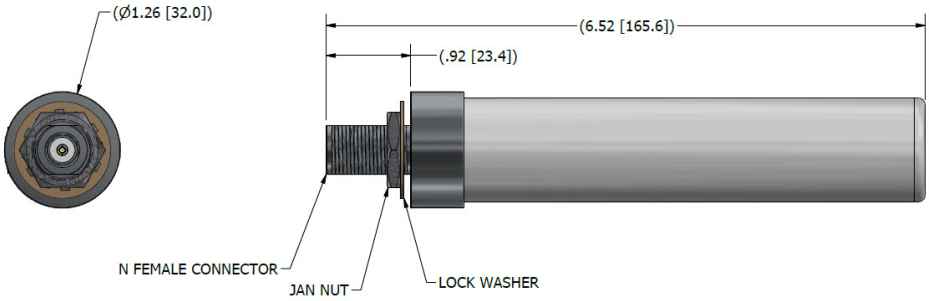

Radiation Patterns

The following figures show the antenna radiation patterns.

Note These radiation patterns show frequencies tested by the antenna vendor outside of the supported 4.9-5.9 GHz frequency range.

Elevation - Phi 90

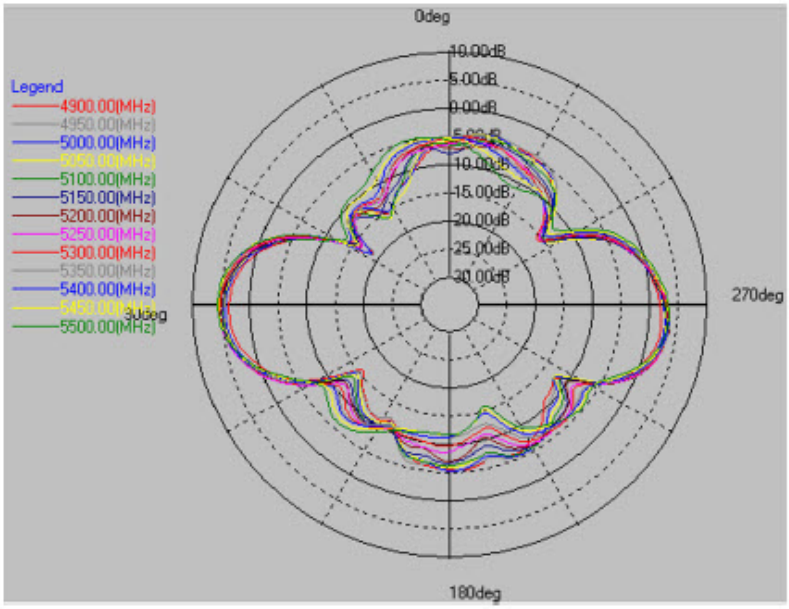



Azimuth - Theta 90

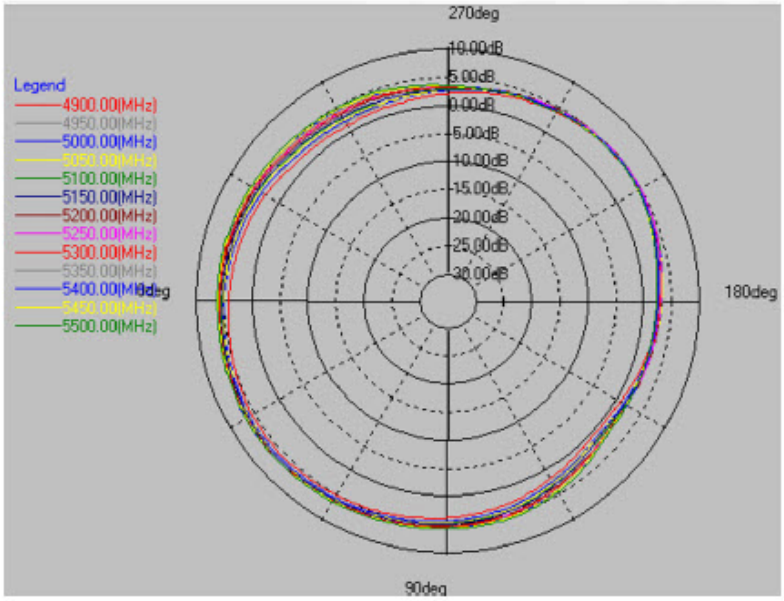



Elevation - Phi 90

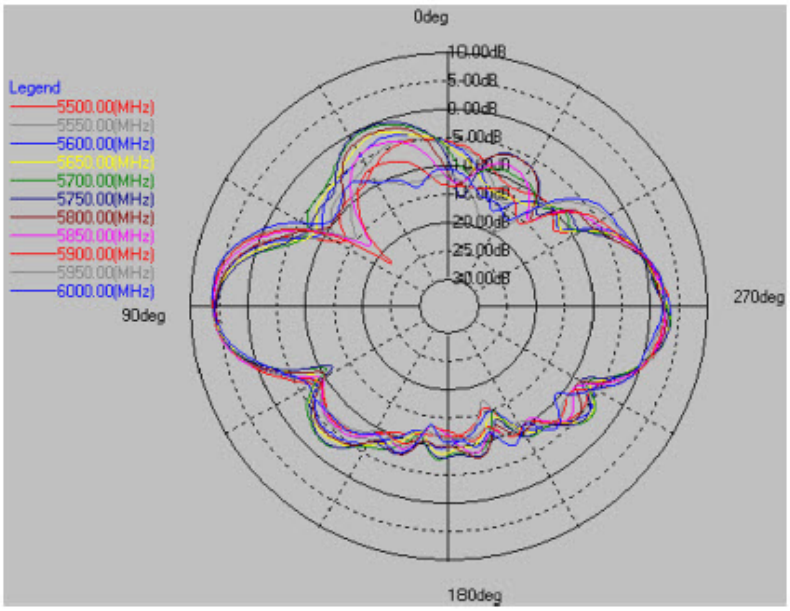



Azimuth - Theta 90

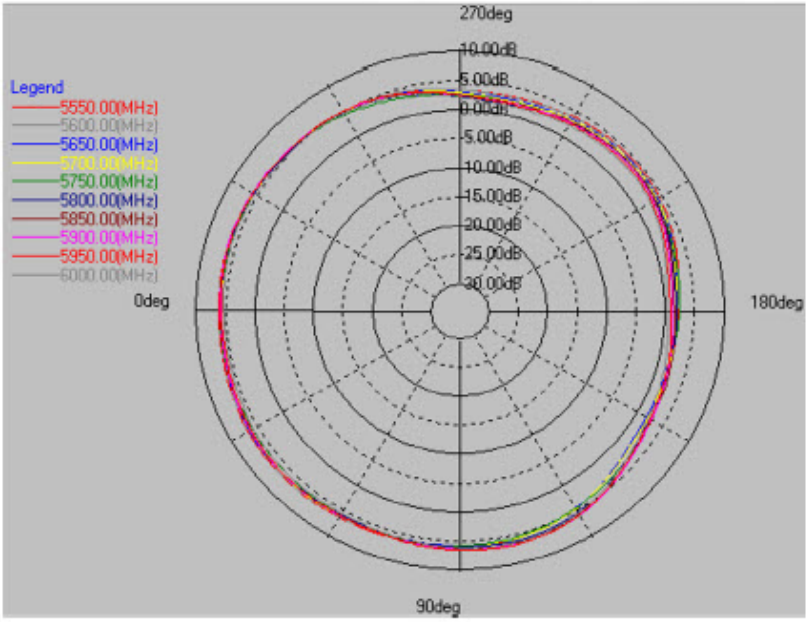



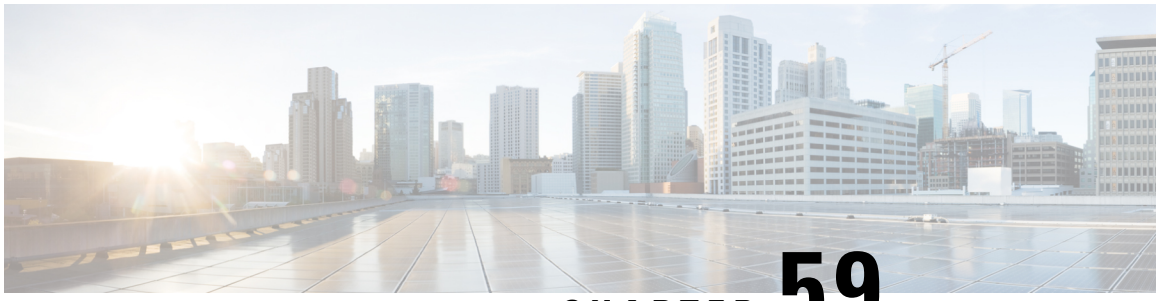

CHAPTER 59

Cisco 4.9-6 GHz Omni Mobile WiFi Antenna (IW-ANT-OMM-53-N)

This chapter contains the following sections:

- Overview, on page 899
- Specifications, on page 900
- Mechanical Drawing, on page 901
- Radiation Patterns, on page 902

Overview

The Cisco 4.9-6 GHz Omni Mobile WiFi Antenna (IW-ANT-OMM-53-N) delivers enhanced connectivity for Autonomous Guided Vehicles (AGVs), Autonomous Mobile Robots (AMR) and unmanned systems even in NLOS and highly obstructed environments. With a multi-polarized three-dimensional element design, it provides maximum reliability and signal stability.

Figure 384: IW-ANT-OMM-53-N Antenna



Specifications

The following table shows the antenna specifications:

Frequency Range	4.9-6.0 GHz
Gain	3 dBI
VSWR	<1.6:1
Horizontal Pattern Type	Omni Directional
Vertical Pattern Type	Full
Ground Plane	Built In
Environmental Type	Outdoor
Operational Temperature	-40 to 85 deg C

Storage/Transport Temperature	-40 to 85 deg C
IP Rating	IP67
RoHS	REACH Compliant
Color	Black
Antenna Feeds	One
Connector Type	N-Female 1.5
Polarization	Multi-Polarized
Power	50 Watts Input
Impedance	50 ohms Nominal
Construction	UV Stabilized ASA
Length	1.0 inch
Width	1.0 inch
Height	2.7 inch
Weight	2.0 oz.
Mounting Type	Surface
Hardware Included	Nut and Washer

Mechanical Drawing

Mounting hardware and O-Ring are included in the antenna package.

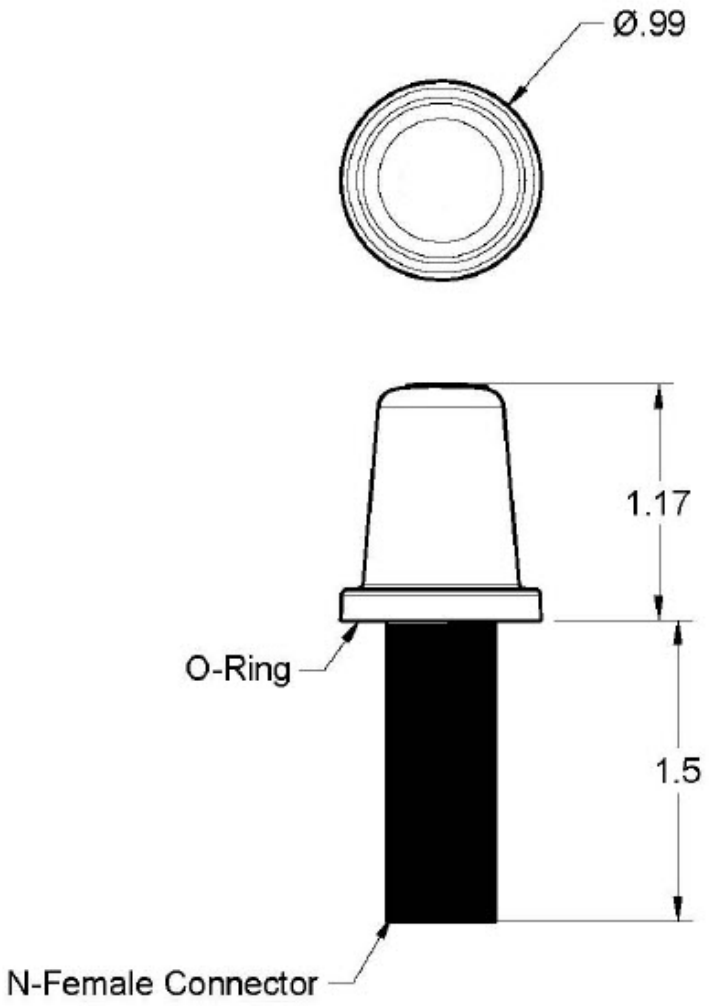

Radiation Patterns

The following figures show the antenna radiation patterns.

4.95 GHz

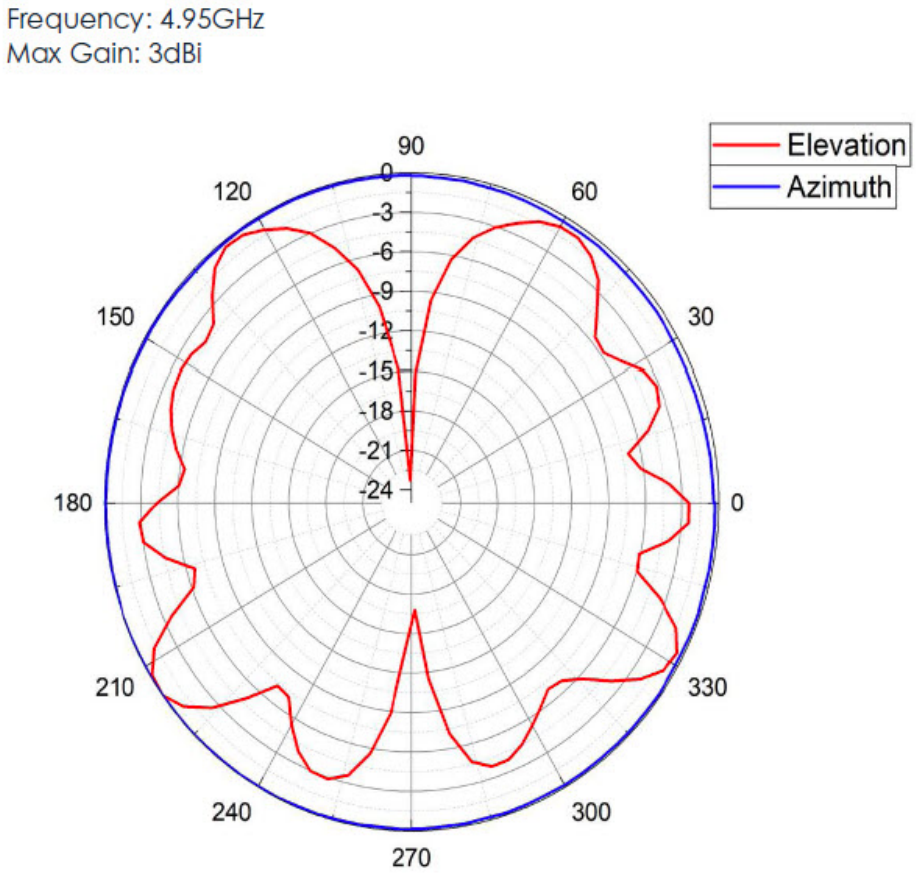
Frequency: 4.95GHz
Max Gain: 3dBi
Elevation
Azimuth
90
120
60
150
30
180
0
210
330
240
300
270
0
-3
-6
-9
-12
-15
-18
-21
-24

5.15 GHz

Frequency: 5.15GHz
Max Gain: 3dBi

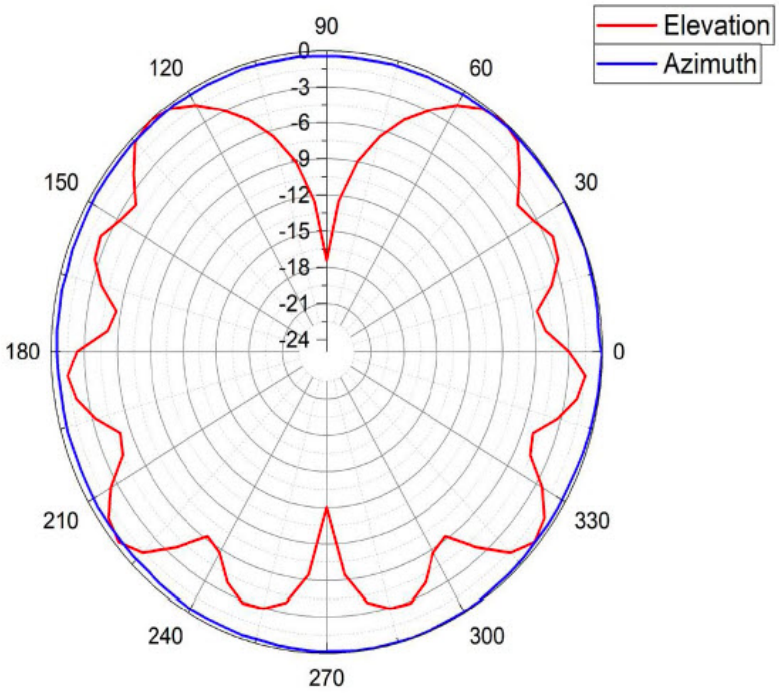

5.8 GHz

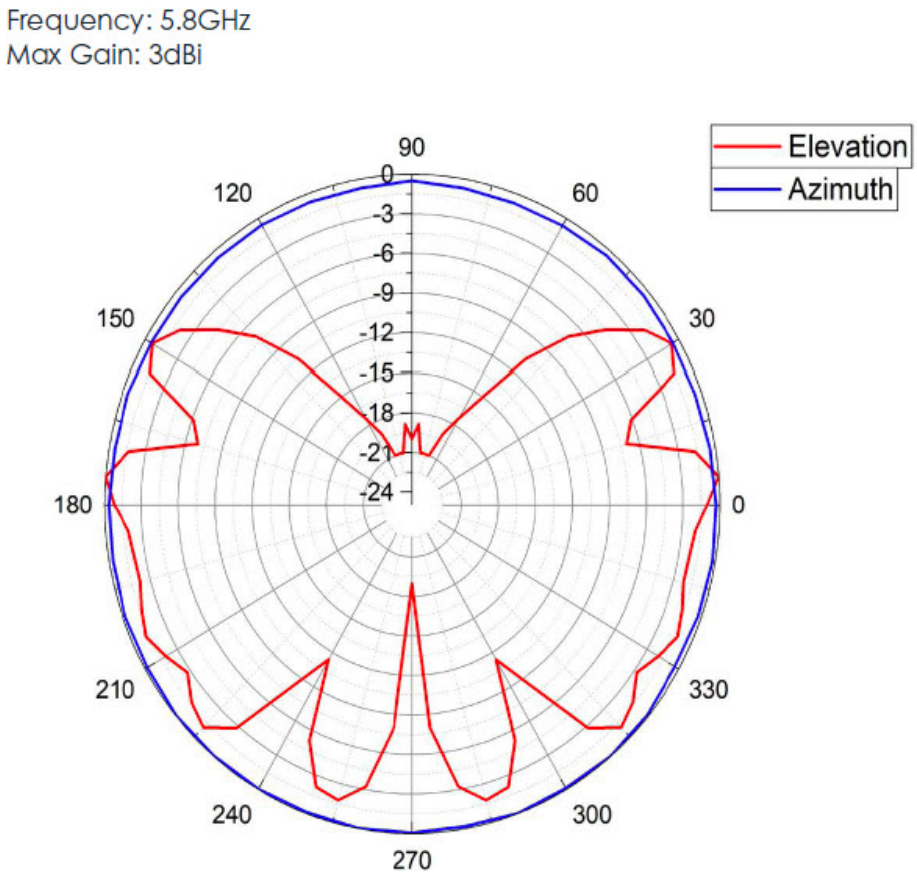
Frequency: 5.8GHz
Max Gain: 3dBi
Elevation
Azimuth
90
120
60
150
30
180
0
210
330
240
300
270
0
-3
-6
-9
-12
-15
-18
-21
-24

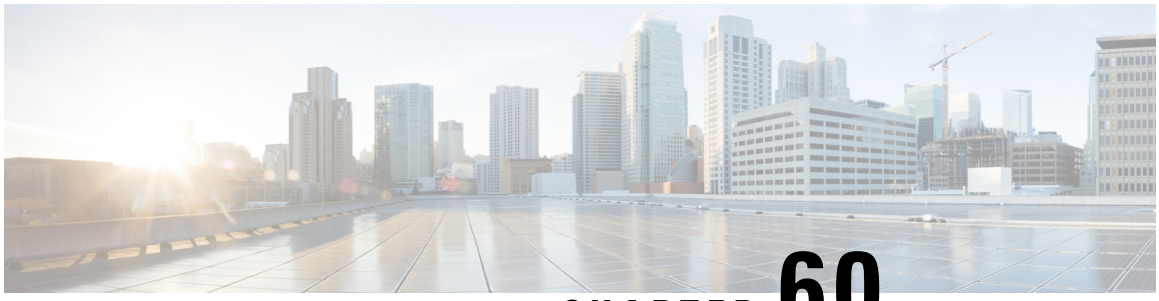

CHAPTER 60

Cisco Horizontally Polarized Omnidirectional Base Station Antenna (IW-ANT-OMV-55-N)

This chapter contains the following sections:

- Overview, on page 907
- Electrical Specifications, on page 908
- Mechanical and Environmental Specifications, on page 908
- Mechanical Drawing, on page 908
- Radiation Patterns, on page 909

Overview

The Cisco horizontally polarized omnidirectional base station antenna (IW-ANT-OMV-55-N) design utilizes a linear array, encapsulated in a heavy-duty fiberglass radome with a thick-walled mounting base for reliable, long-term use. This rugged design withstands harsh environments, making the antenna ideal for Industrial Wireless and Military applications. The antennas in this series are DC grounded for ESD protection of radio components.

Figure 385: IW-ANT-OMV-55-N Antenna



Features include the following:

- UV-stable, black fiberglass radome (0.625" diameter)
- DC grounded design

- Fully sealed IP67 design
- Type N Female Connector
- Wind rated 125 mph
- Temperature -40°C to +85°C

Electrical Specifications

The following table is a summary of the electrical specifications:

Typical VSWR	<1.5:1
Bandwidth	5.1-5.9 GHz
Nominal Impedance	50 Ω
Gain	4 dBi
Elevation Half Power Beamwidth	42°
Maximum Power	20 watts
Polarization	Vertical

Mechanical and Environmental Specifications

The following table is a summary of the mechanical and environmental specifications:

Dimensions	0.825 OD x 5.5 L in (2.09 x 13.9 cm)
Weight	0.27 lbs
Housing Material	Black UV-Stable Pultruded Fiberblass (0.625" diameter)
Temperature Range	-40°C to +85°C
Bending Moment at Rated Wind	0.30 lbf-ft
Lateral Thrust at Rated Wind	1.31 lbf
Equivalent Flat Plate Area	0.02 ft^2

Mechanical Drawing

The following diagram provides mechanical details of the antenna.

Note All measurements are in millimeters.

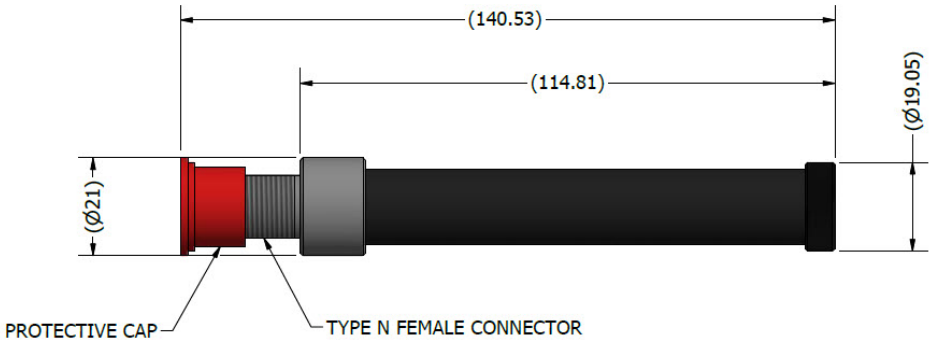

Radiation Patterns

The following figures show the antenna radiation patterns.

Note These radiation patterns show frequencies tested by the antenna vendor outside of the supported 4.9-5.9 GHz frequency range.

Elevation - Phi 90

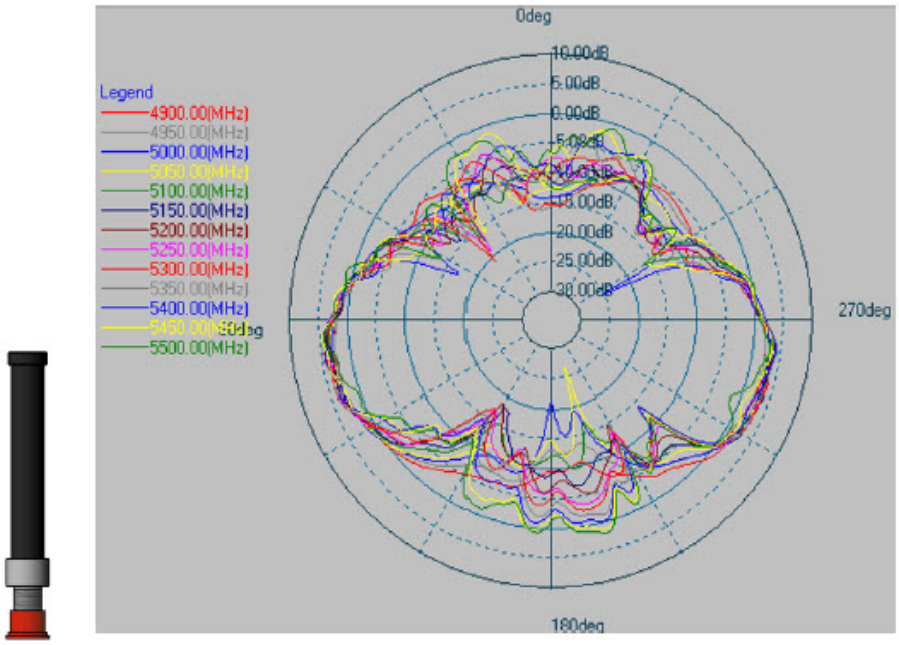

Azimuth - Theta 90

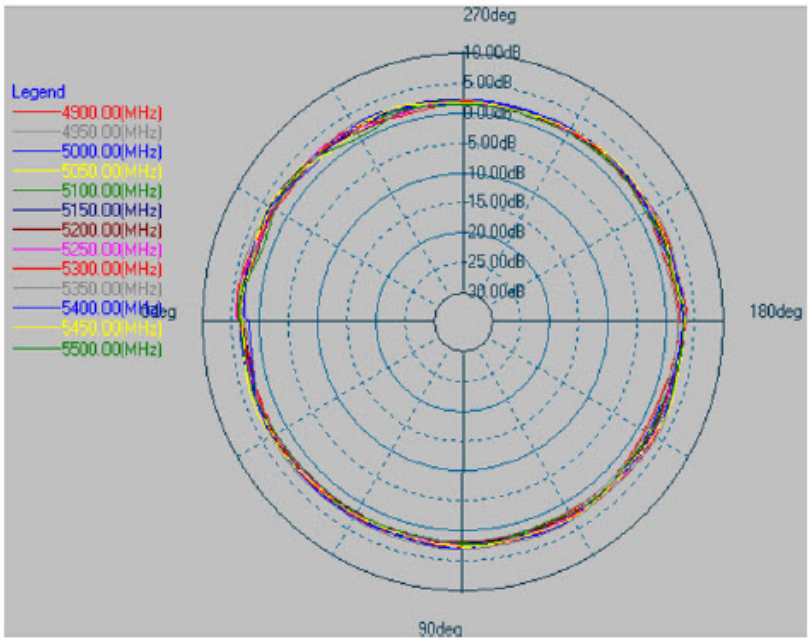

Elevation - Phi 90



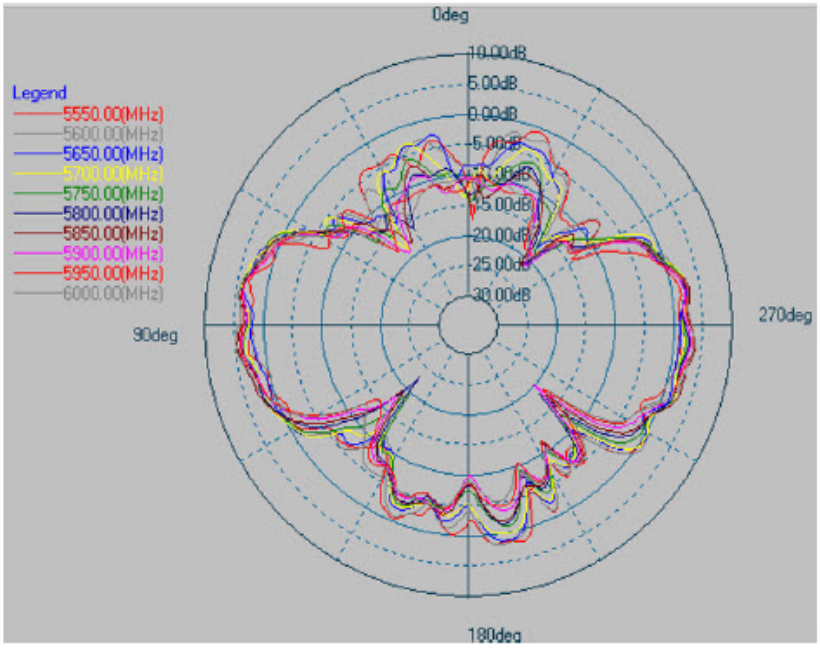

Azimuth - Theta 90



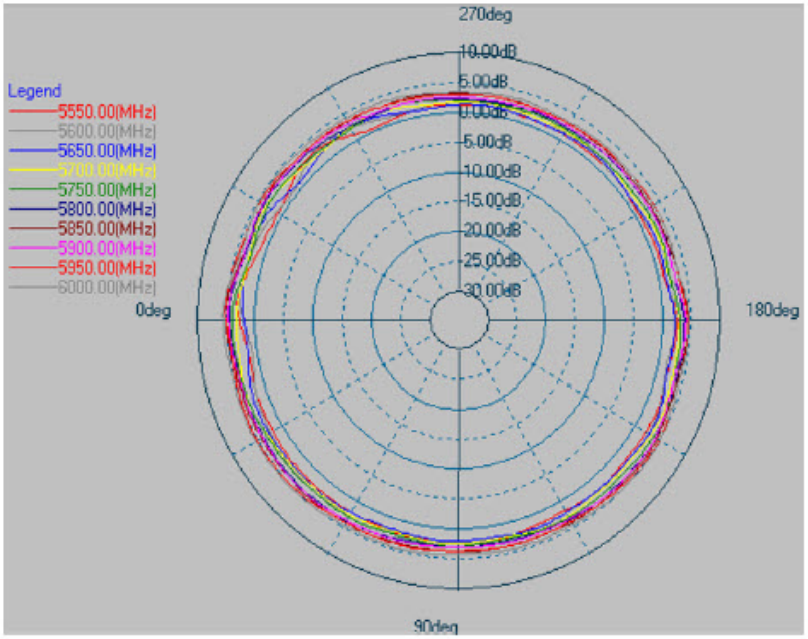

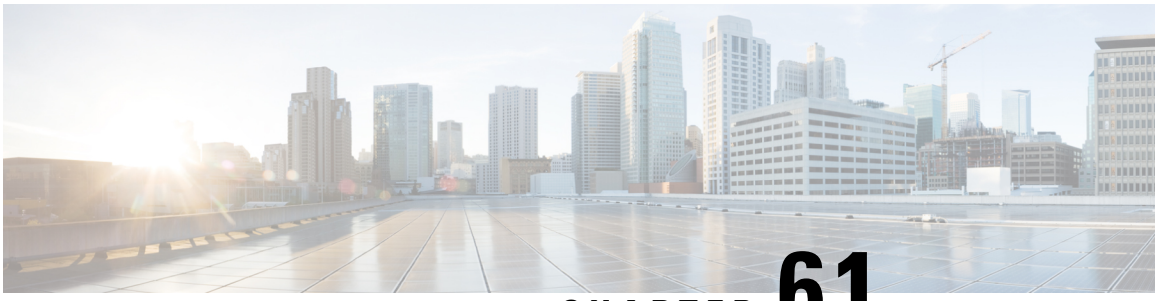

CHAPTER 61

Industrial Wireless 2-port High Gain Panel Antenna (IW-ANT-PNL-515-N)

This chapter contains the following sections:

- Overview, on page 913
- Specifications, on page 915
- Mechanical Drawings, on page 916
- Radiation Charts, on page 920
- Installation Options, on page 922

Overview

The Industrial Wireless 2-port high gain panel antenna (IW-ANT-PNL-515-N) is a directional 2-port array solution deployed in a variety of applications. Its versatile mounting solutions and unique and highly efficient radiation properties make this antenna a suitable solution for point-to-point communications in the industrial wireless space.

The antenna is equipped with two N(f) connectors and comes with 2x LMR-240 cables. The IW-ANT-PNL-515-N is also compatible with the bracket and mounting schemes for Cisco's IW9165D Industrial client.

Figure 386: Antenna Side

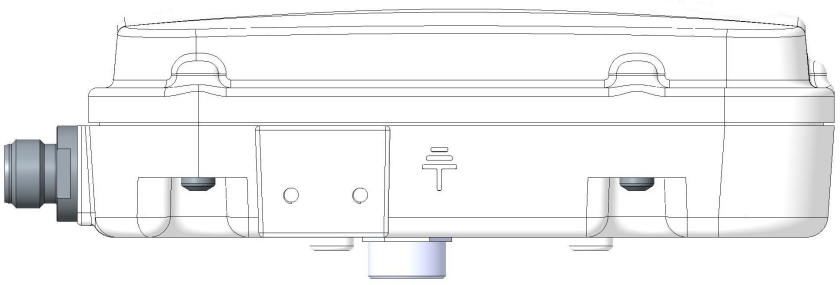

Figure 387: Antenna Front



Figure 388: Antenna Back

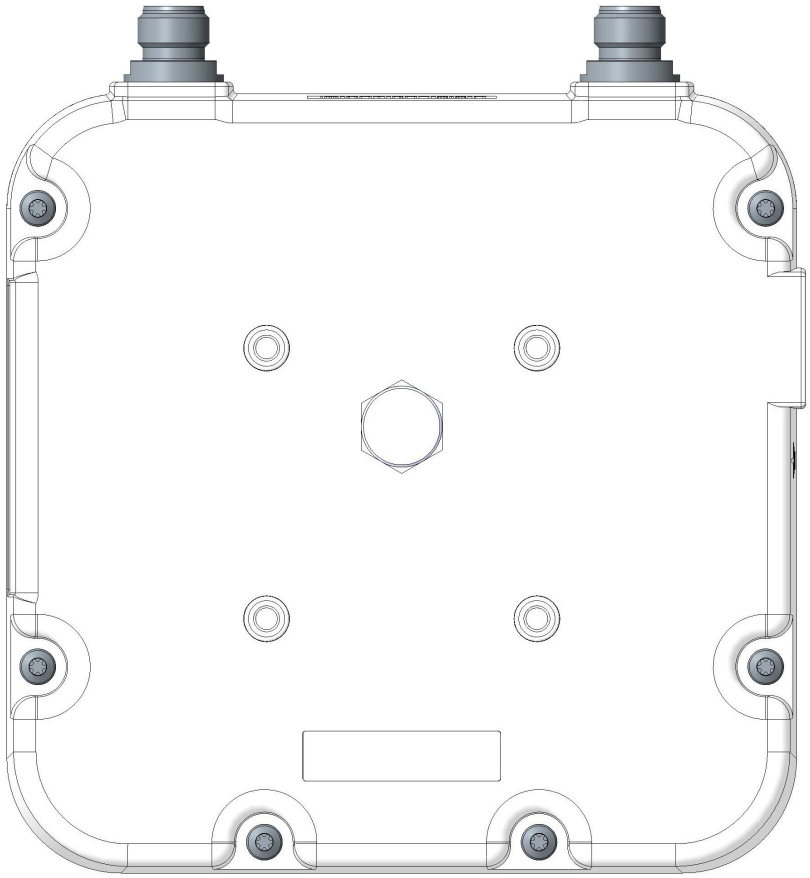

Features include the following:

- Compact design
- 15 dBi Gain
- 2x N(f) ports
- 2x, N(m)-to-N(m), LMR-240, 3m cables
- Compatible mounting with IW9165D
- IP66/67 rated
- High port-to-port isolation

Specifications

The following table lists the specifications for the antenna:

Specification	Description
Frequency	4900-5925 MHz
Polarization	±45°
VSWR	< 2.2:1
Port-to-Port Isolation	> 25 dB
Maximum Gain	15 dBi
HPBW (V, H)	21±4 deg, 28±5 deg
Size	7.5 in x 6.9 in x 2.3 in 191.3mm x 175.3mm x 57.8mm
Cable length	3 m
Cable Type	LMR 240, N(m)-to-N(m)
Connector	N-Type, female
Wind rating	200 km/h
Operating temp	-40 to +85 °C
Flammability	UL-94 V0
IP rating	IP66, IP67

Mechanical Drawings

The following images show details about the antenna:

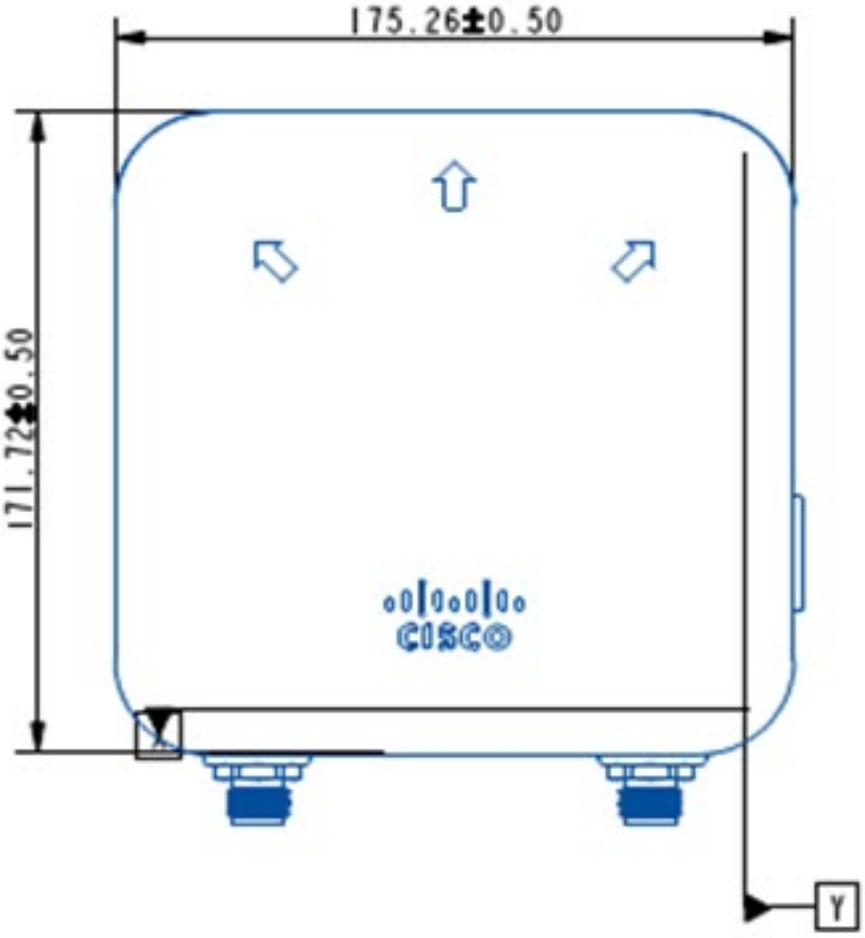
175.26±0.50
171.72±0.50
CISCO
Y

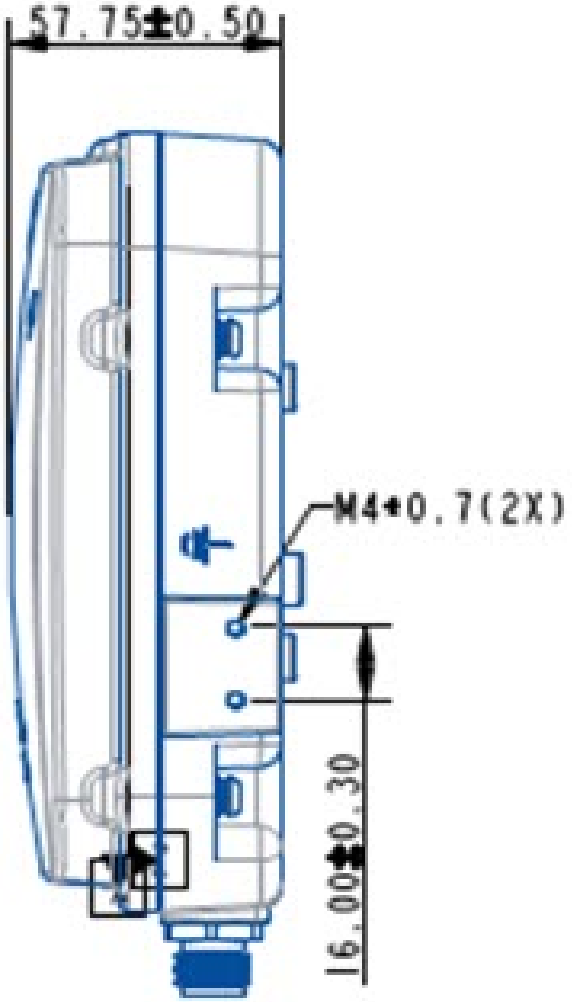
57.75±0.50
M4*0.7(2X)
16.00±0.30

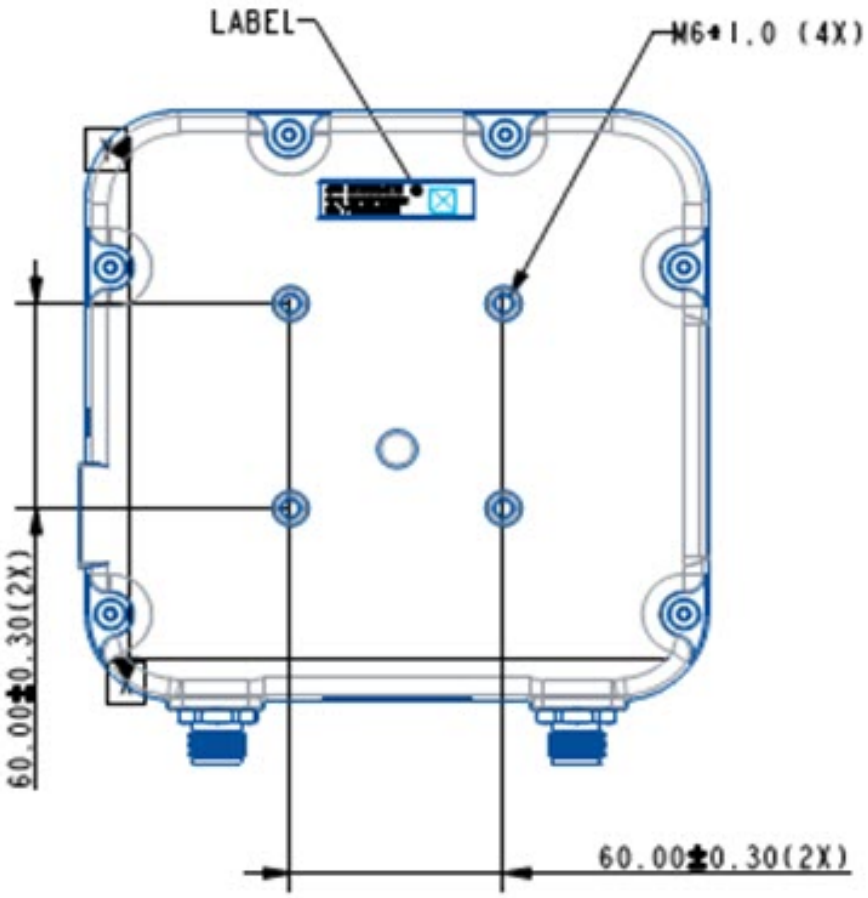
LABEL
M6*1.0 (4X)
60.00±0.30(2X)
60.00±0.30(2X)

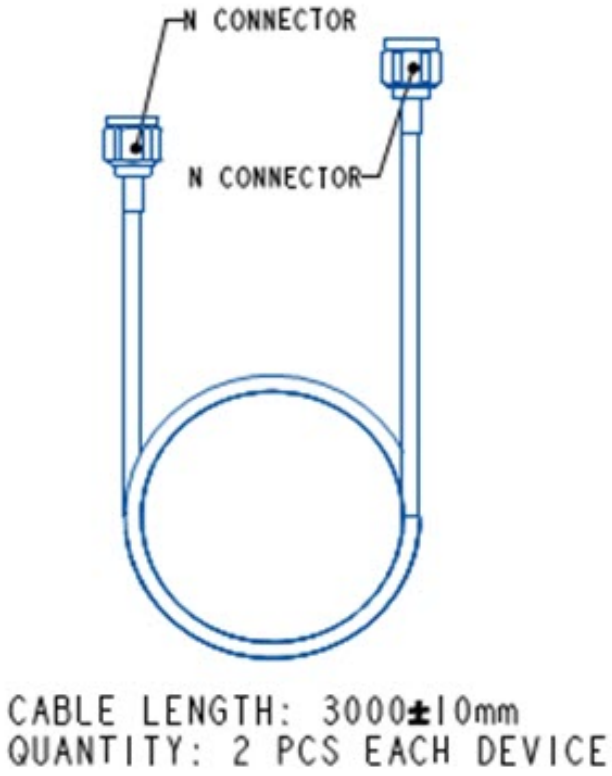

Radiation Charts

The 5 GHz band radiation patterns are shown below. For illustration purposes, the reference coordinates of such polar plots are mapped to the following device orientation.

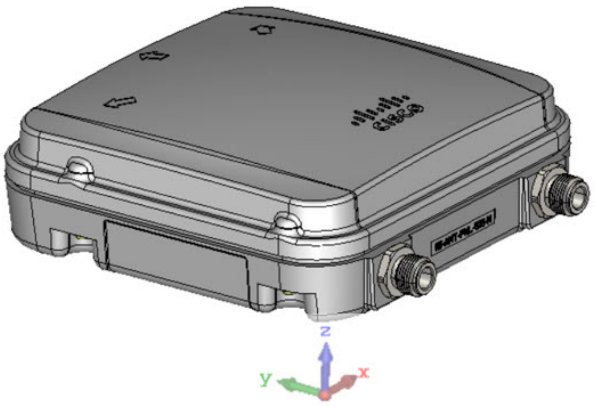

Figure 389: Vertical Plane (Y-Z)

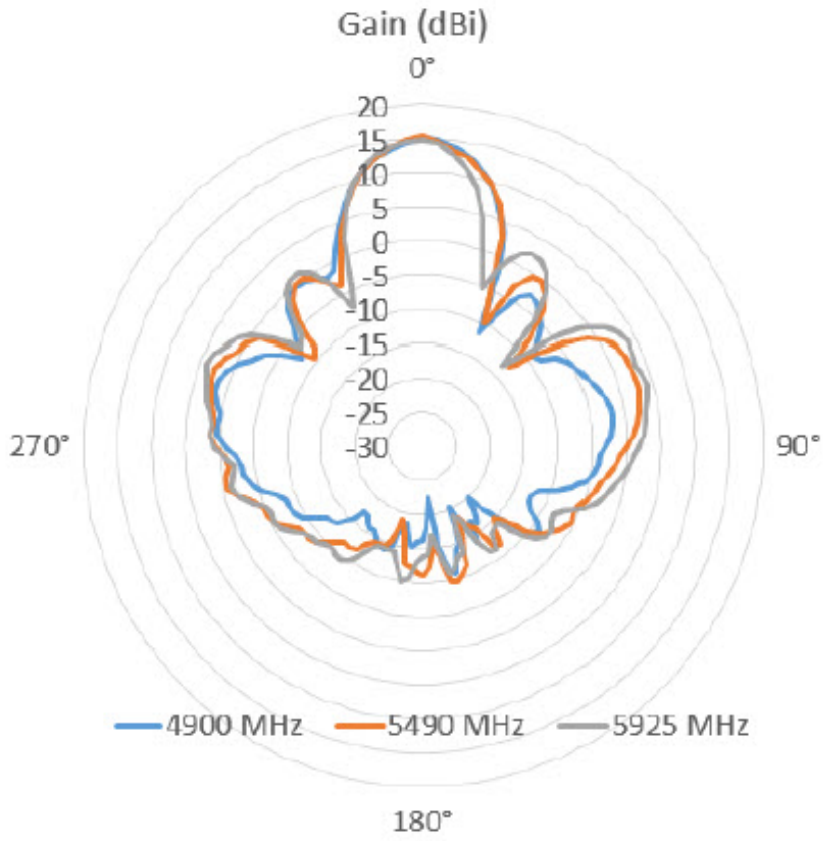

Figure 390: Horizontal Plane (X-Z)

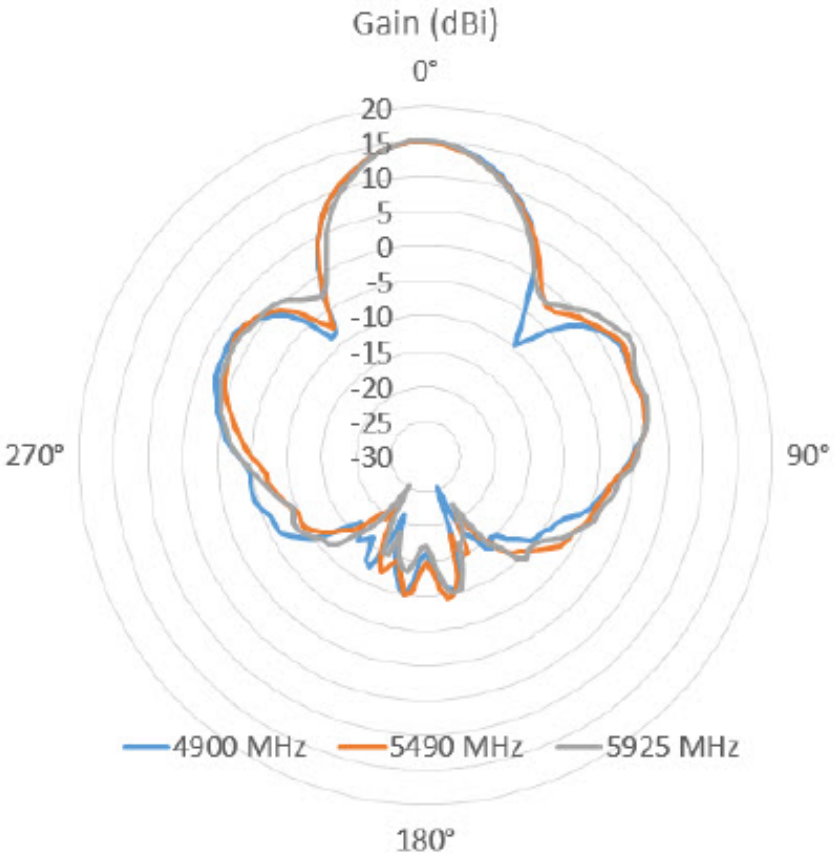

Installation Options

The IW-ANT-PNL-515-N high gain antenna can be wall or pole mounted. There are two optional mounting kits:

Cisco PID	Description
IW-ACC-PMK1=	Pole/Wall mounting bracket with tilt and rotation.
AIR-ACC1530-PMK1=	Standard Pole/Wall mount bracket

Both of these mounts are also compatible with, among others, the IW9165D access point.

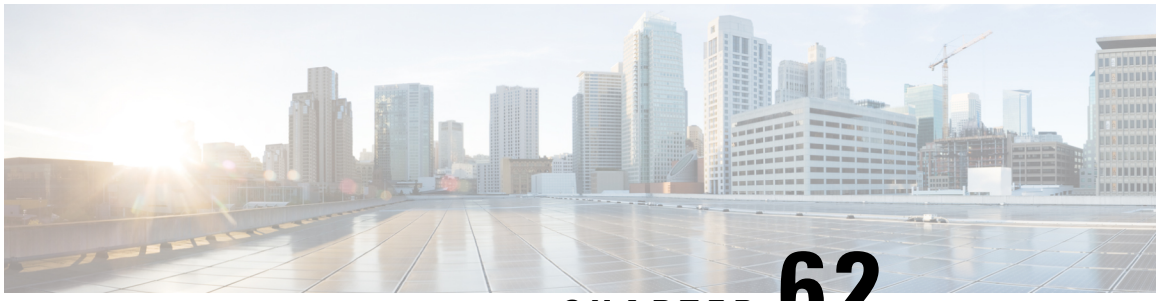

CHAPTER 62

Cisco Spot-S 2x2 Wi-Fi MIMO Antenna (IW-ANT-PNL-59-N)

This chapter contains the following sections:

- Overview, on page 923
- Electrical Specifications, on page 924
- Mechanical Specifications, on page 925
- Environmental Specifications, on page 925
- Mechanical Drawing, on page 925
- Antenna Installation, on page 926
- Antenna Gain, on page 929
- Antenna S Patterns, on page 929
- Antenna Radiation Patterns, on page 930

Overview

The Cisco Spot-S 2x2 MIMO Antenna (IW-ANT-PNL-59-N) is a small directional, planar, linear polarized antenna.

Features include the following:

- Dual-slant +/- 45° for MIMO antenna configuration
- WLAN IEEE 802.11 a/h/p/n
- Rugged design, meets EN 50155 and EN 50125-3 railway standards
- Ingress protection IP66 & IP67
- For outdoor and indoor applications
- Wall mounting material is included

Figure 391: IW-ANT-PNL-59-N Antenna



Electrical Specifications

The following table is a summary of the electrical specifications:

Frequency	5150 - 5935 MHz
Nominal Impedance	50 Ω
VSWR	2
Gain	9 dBi
3dB beamwidth (h)	70°
3dB beamwidth (v)	60°
Composite power max	30 W
Front to back ratio	20 dB
Vertical electrical tilt	0°
Port Isolation	20 dB

Mechanical Specifications

The following table is a summary of the mechanical specifications:

Dimensions	101 x 81 x 36 mm (Height x Width x Depth)
Weight	0.11 kg
Color	RAL 7044 (Grey)
Material	PC (Polycarbonate)
Windload	Frontal: 15 N at 160 km/h Wind speed survival: 220 km/h
Connectors	N, jack (female)
Polarization	Port 1: -45° slant Port 2: +45° slant
DC Grounded	Yes

Environmental Specifications

The following table is a summary of the environmental specifications:

Operating Temperature	-40 to 85° C
Storage Temperature	-40 to 85° C
Transport Temperature	-40 to 85° C
Ingress Protection	IP66 & IP67
RoHS Compliant	2011/65/EU including 2015/863 and 2017/2102

Mechanical Drawing

The following diagrams provides mechanical details of the antenna.

Note All measurements are in millimeters.

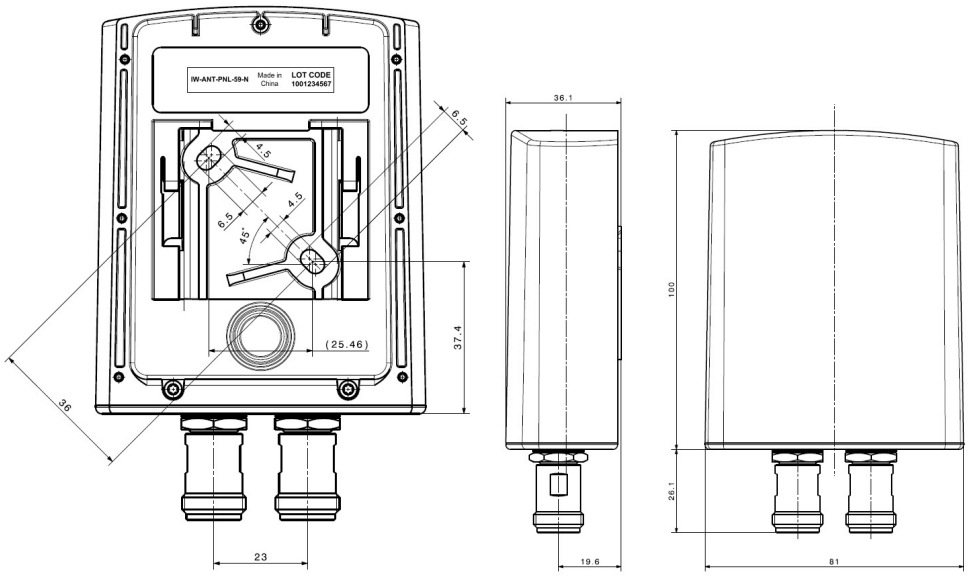

Antenna Installation

Follow these steps to properly install the antenna.

Step 1 Mount the antenna holding plate on a wall with anchor bolts.

Use the holding plate as a template for marking the hole locations.

Figure 392: Anchor Holes

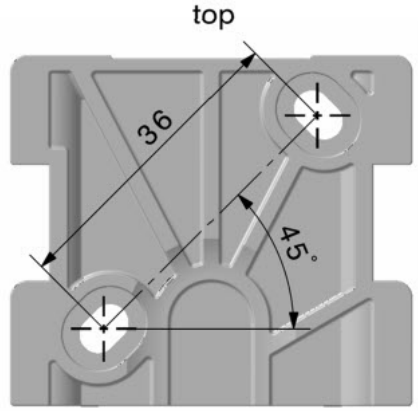

Drill two holes and mount the holding plate on the wall using the following figure for guidance:

Figure 393: Attach Holding Plate to Wall With Anchor Bolts

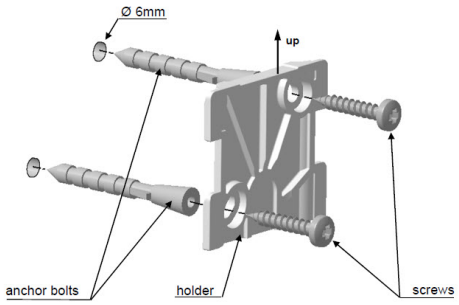

Step 2 Mount the antenna holding plate on a wall with screws.

Use the holding plate as a template for marking the hole locations.

Figure 394: Anchor Holes

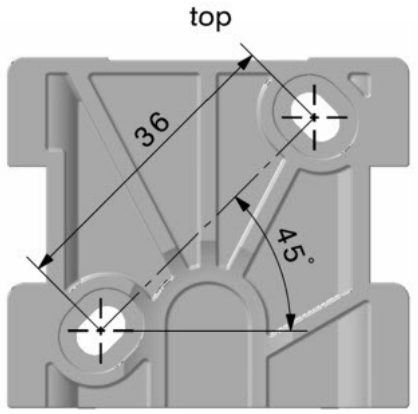

Drill two holes and mount the anchor plate on the wall using the following figure for guidance:

Figure 395: Attach Holding Plate to Wall with Screws

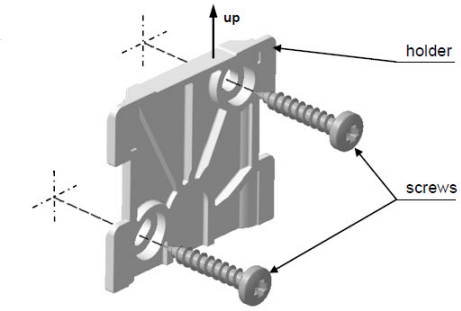

Step 3 Mount the antenna onto the holding plate.

Place the antenna onto the holding plate and slide it down until it engages.

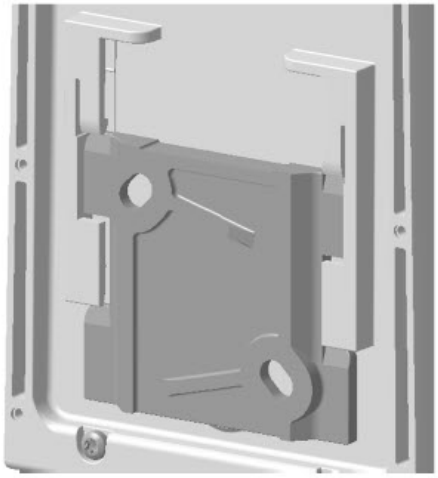

Step 4 Finish the installation by noting the following details.

Figure 396: Installation Details

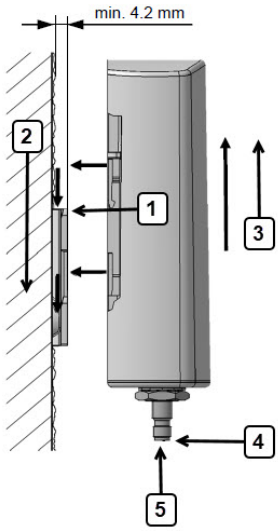

Table 81: Installation Details

Item	Description
1	Align the antenna with the mounting plate and place it on the holding plate.
2	Slide the antenna down until it engages.
3	To release the antenna, slide it upwards.
4	Maximum coupling nut torque is defined by the connector (interface specification) but should not exceed 2 Nm.

Item	Description
5	When attaching the cable, make sure to avoid any bending or tension of the cable.

Antenna Gain

The following figure shows the Antenna Gain:

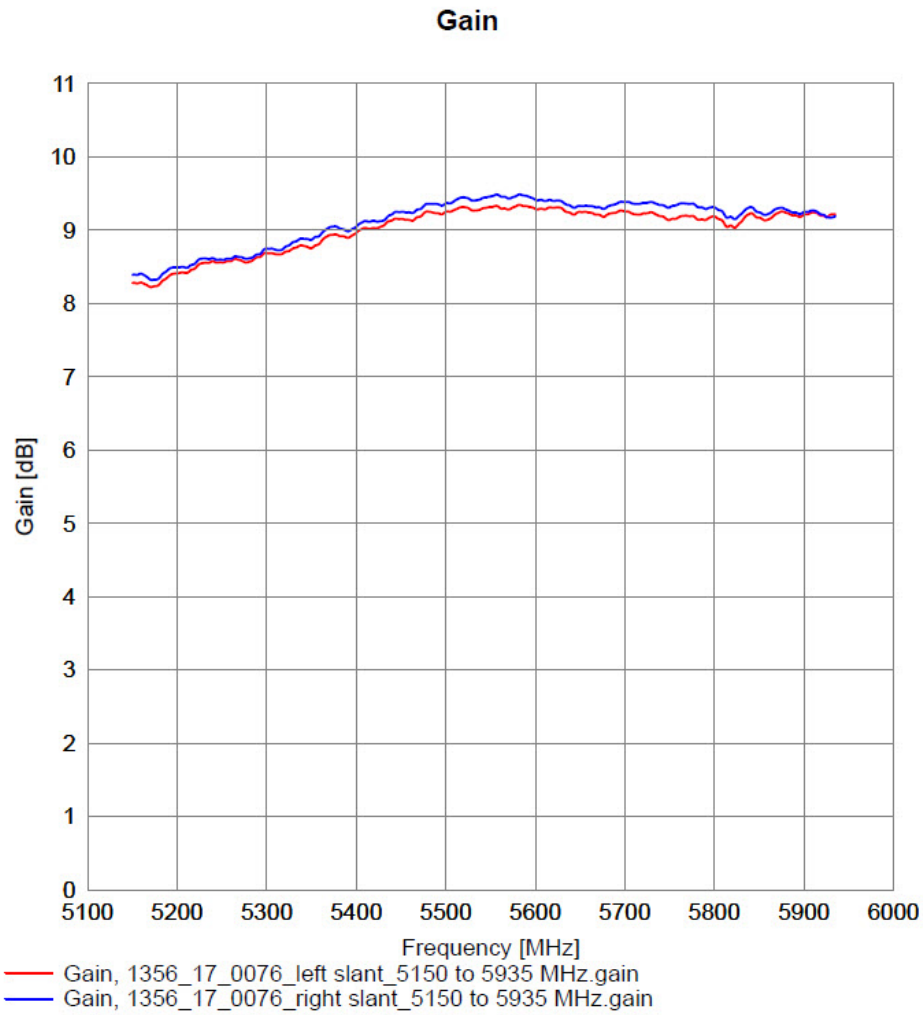

Antenna S Patterns

The following figure shows the Antenna S-Patterns:

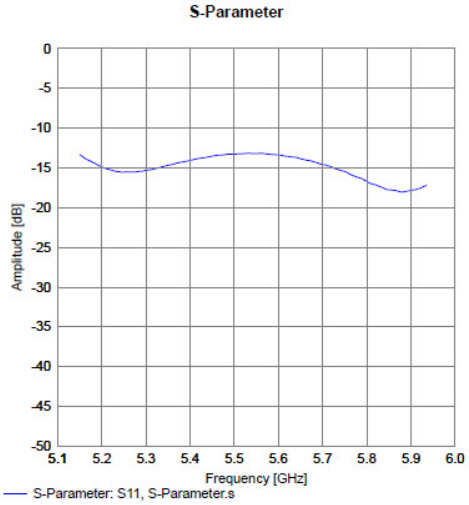

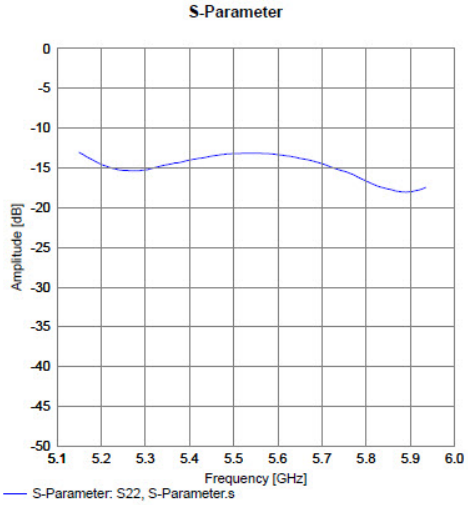

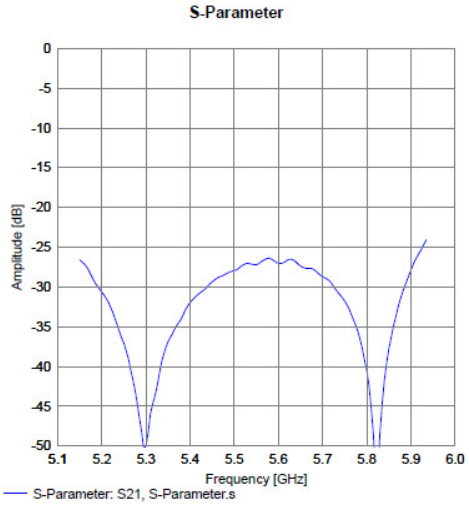

Antenna Radiation Patterns

The following series of figures show the Antenna Radiation patterns:

5150 MHz

Port: left slant
Frequency: 5150 MHz

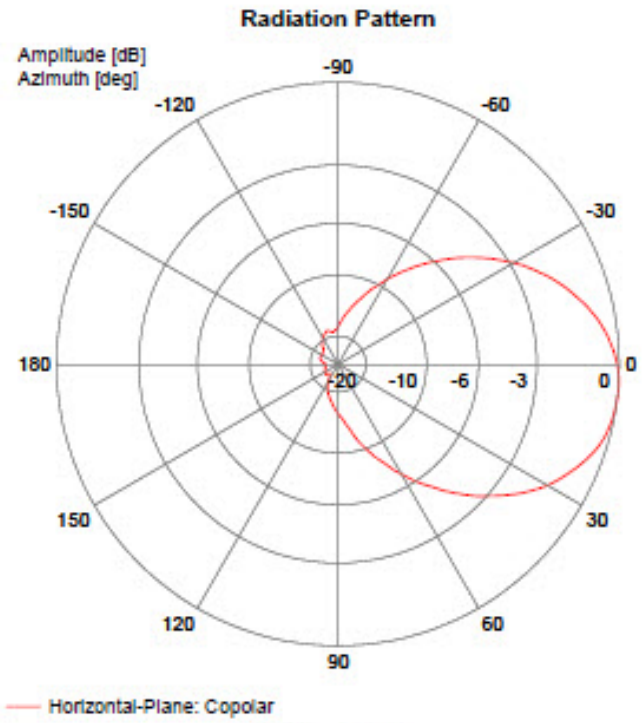

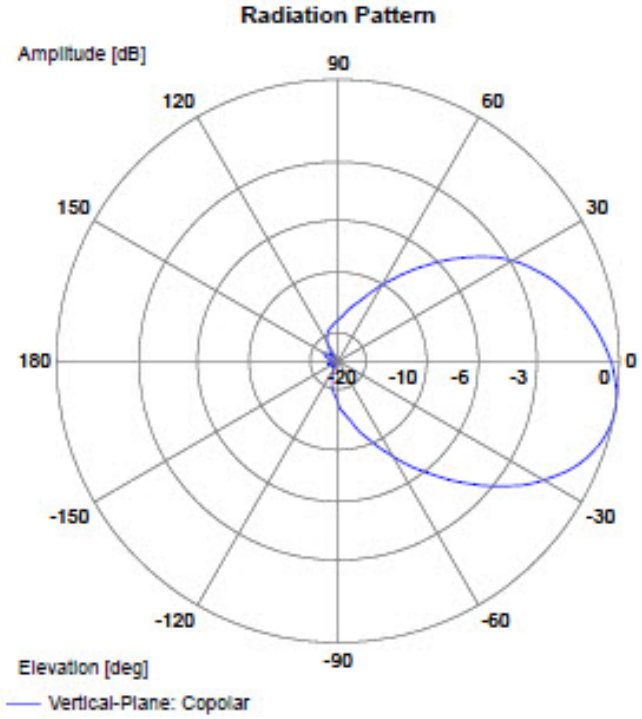

Port: right slant
Frequency: 5150 MHz

5200 MHz

Port: left slant
Frequency: 5200 MHz

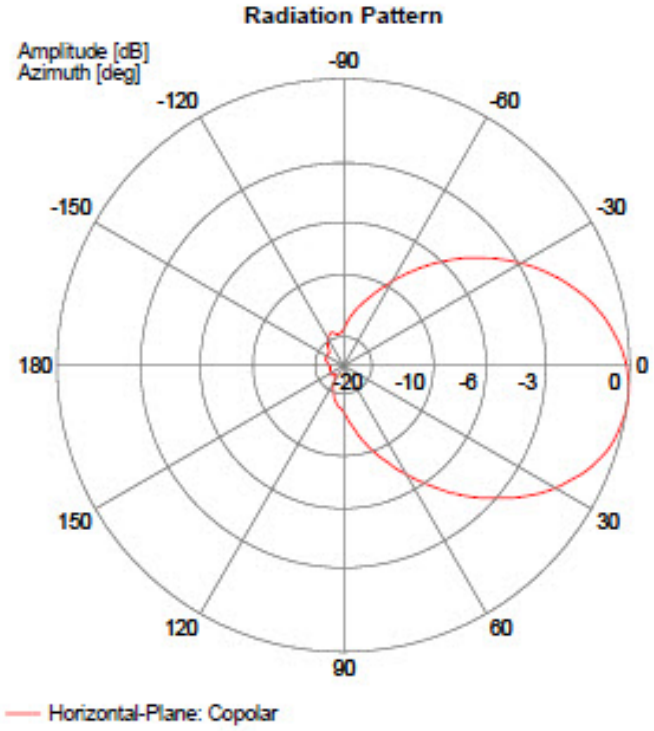

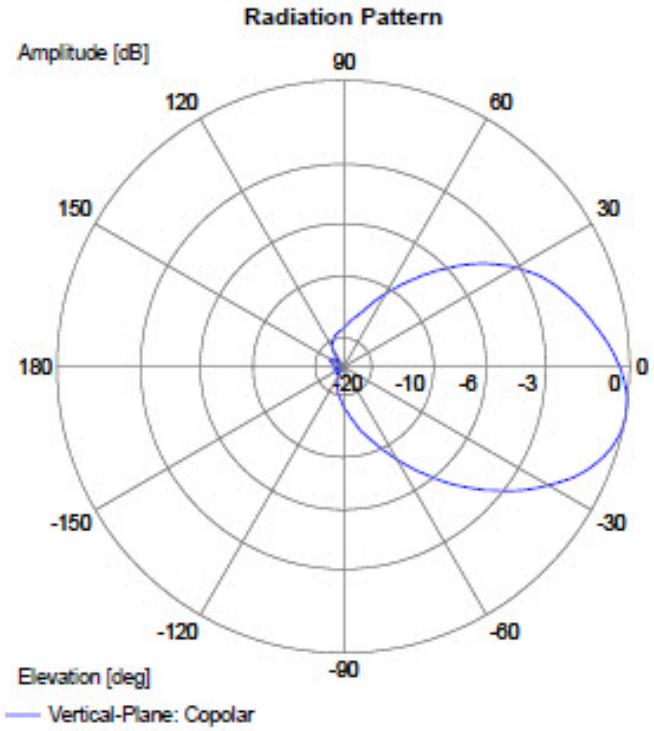

Port: right slant
Frequency: 5200 MHz

5250 MHz

Port: left slant
Frequency: 5250 MHz

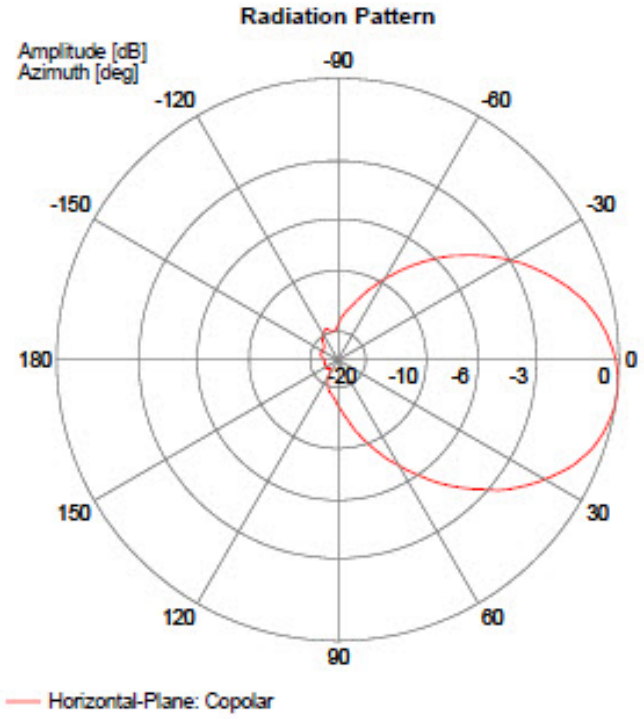

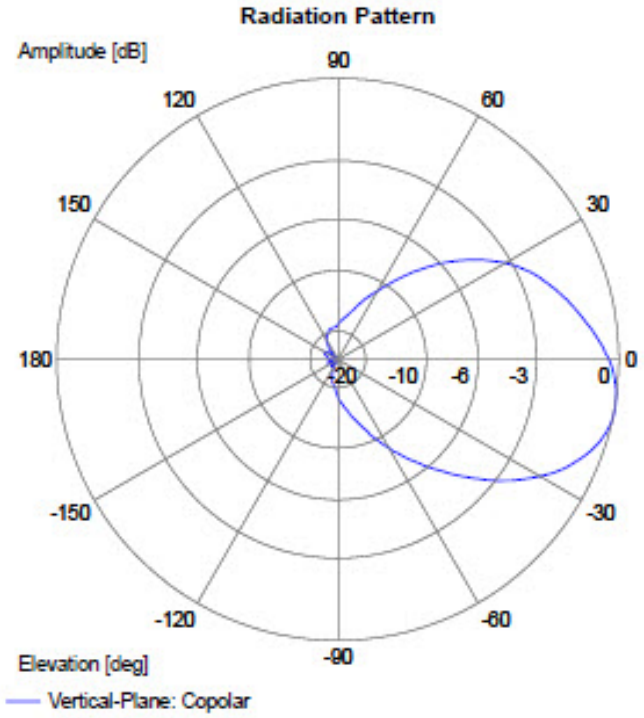

Port: right slant
Frequency: 5250 MHz

5300 MHz

Port: left slant
Frequency: 5300 MHz

Port: right slant
Frequency: 5300 MHz

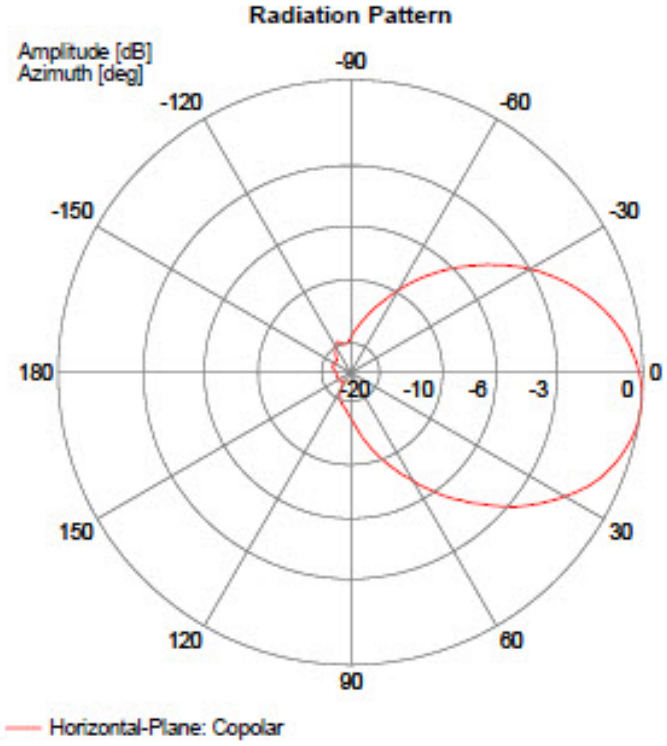

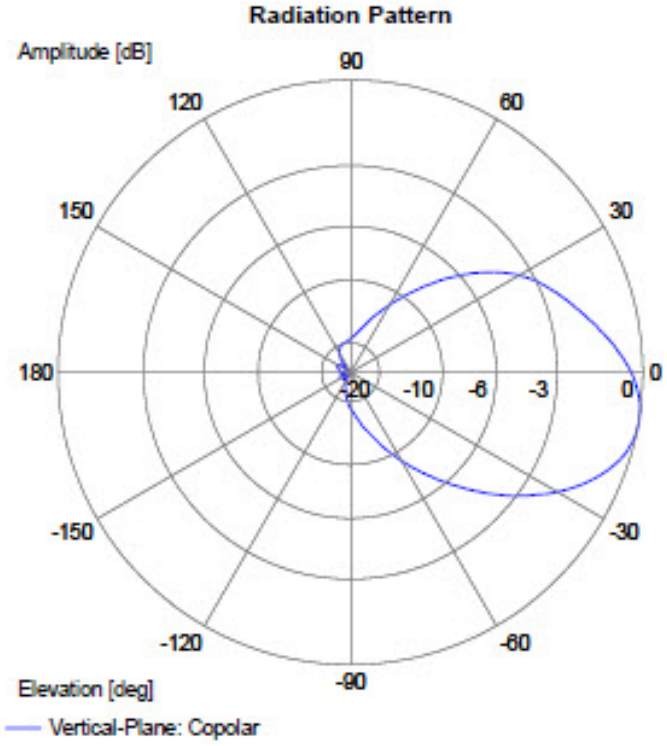

5470 MHz

Port: right slant
Frequency: 5470 MHz

Port: left slant
Frequency: 5470 MHz

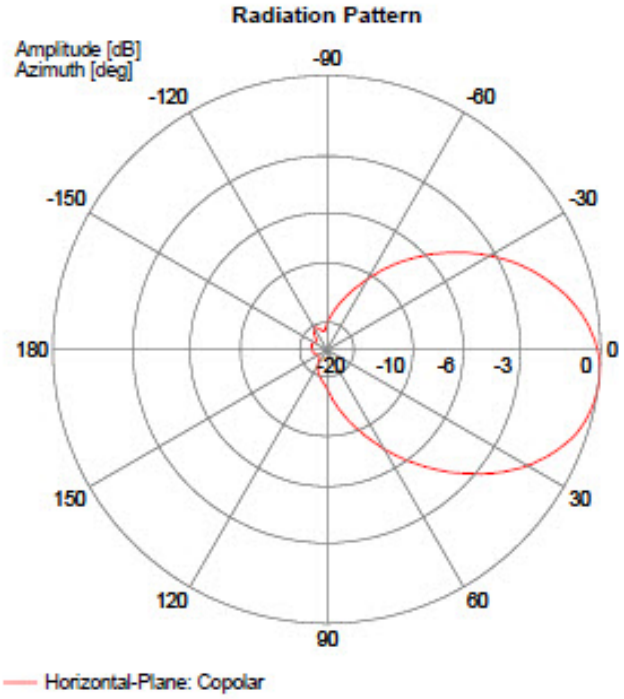

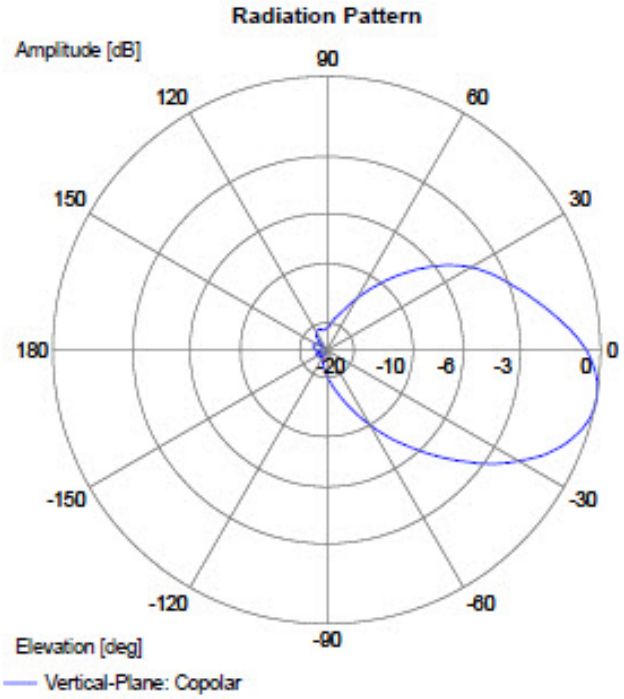

5500 MHz

Port: left slant
Frequency: 5500 MHz

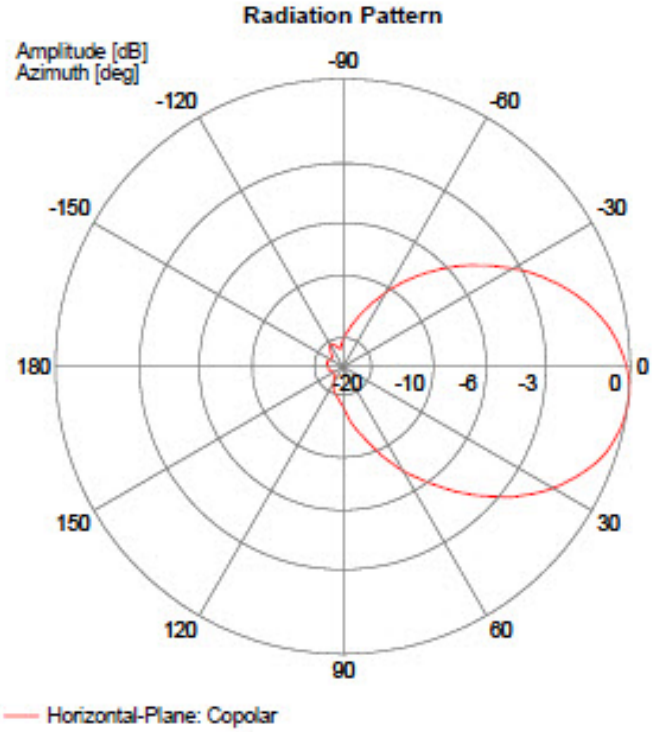

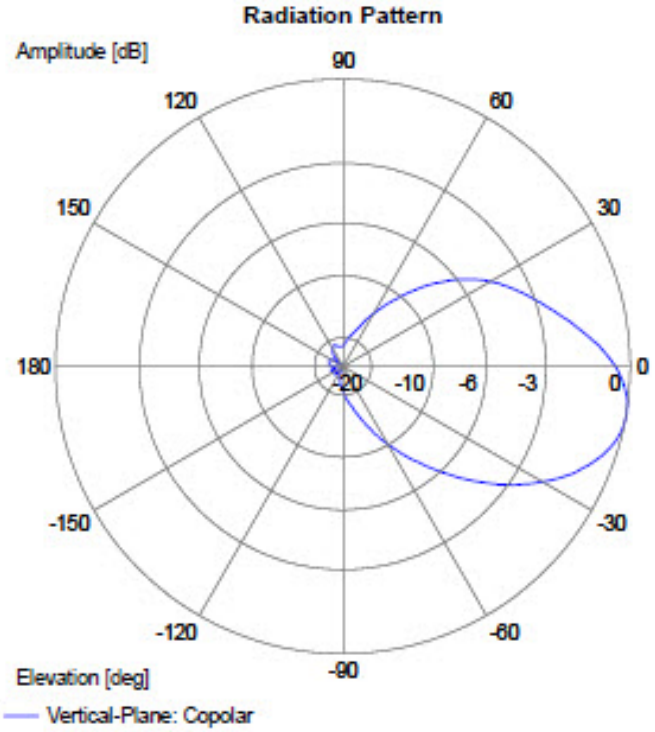

Port: right slant
Frequency: 5500 MHz





5550 MHz

Port: left slant
Frequency: 5550 MHz

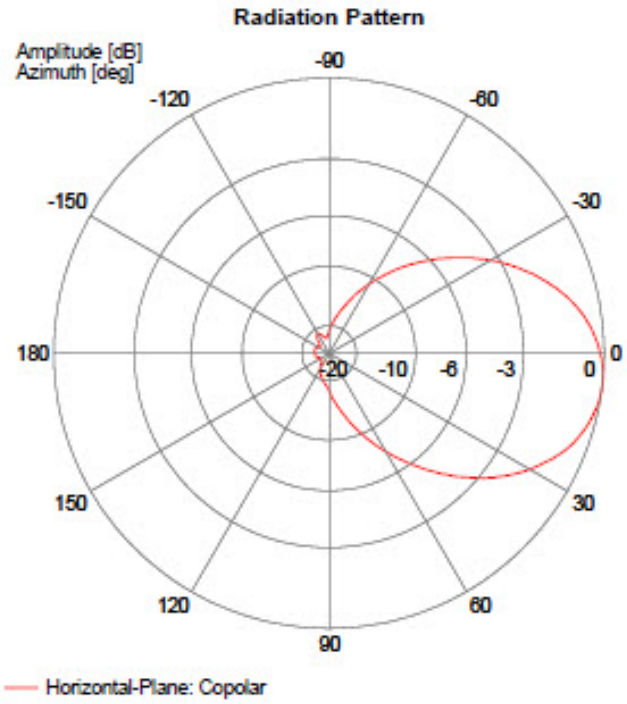

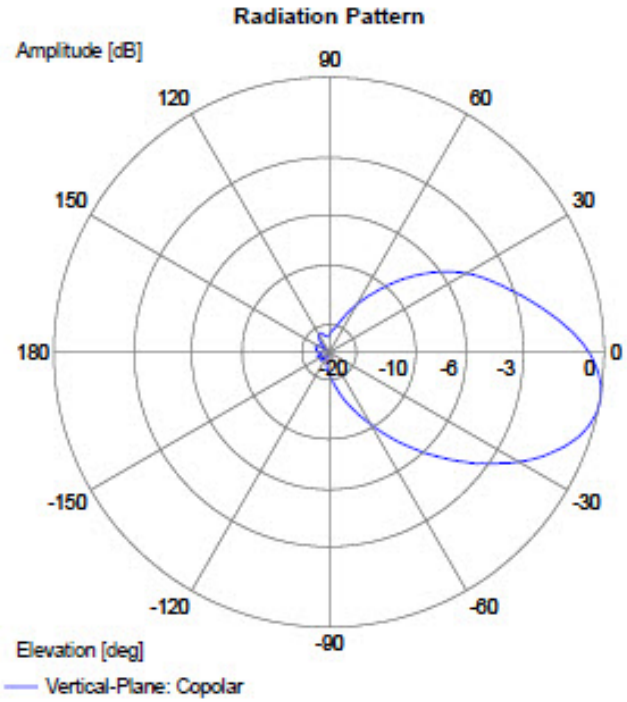

Port: right slant
Frequency: 5550 MHz

5600 MHz

Port: left slant
Frequency: 5600 MHz

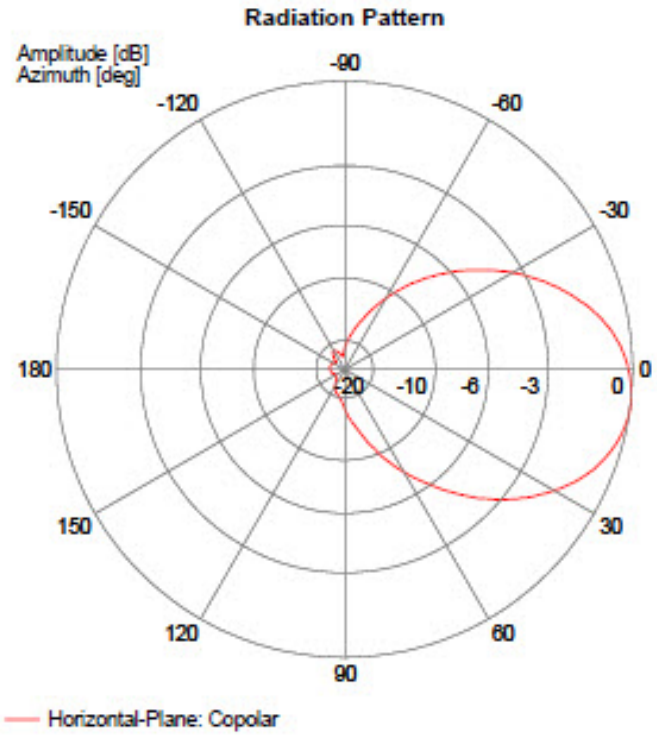

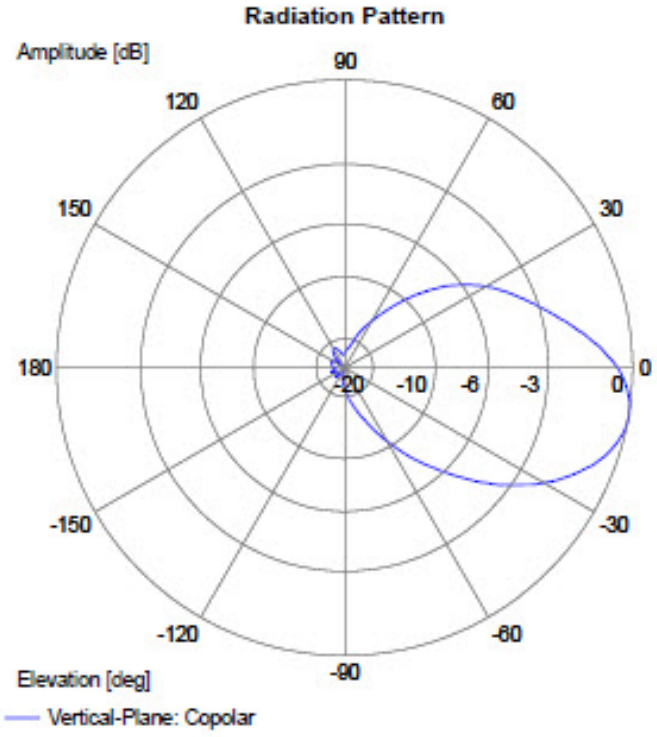

Port: right slant
Frequency: 5600 MHz

5650 MHz

5700 MHz

Port: left slant
Frequency: 5700 MHz

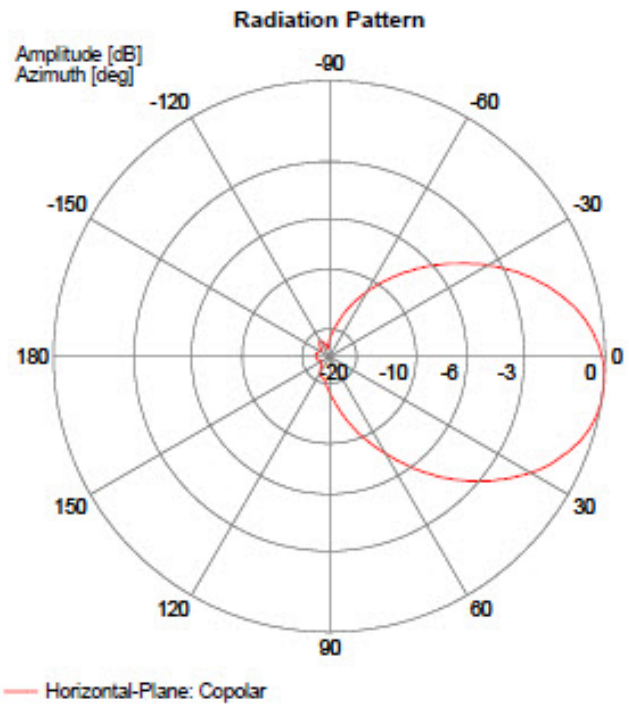

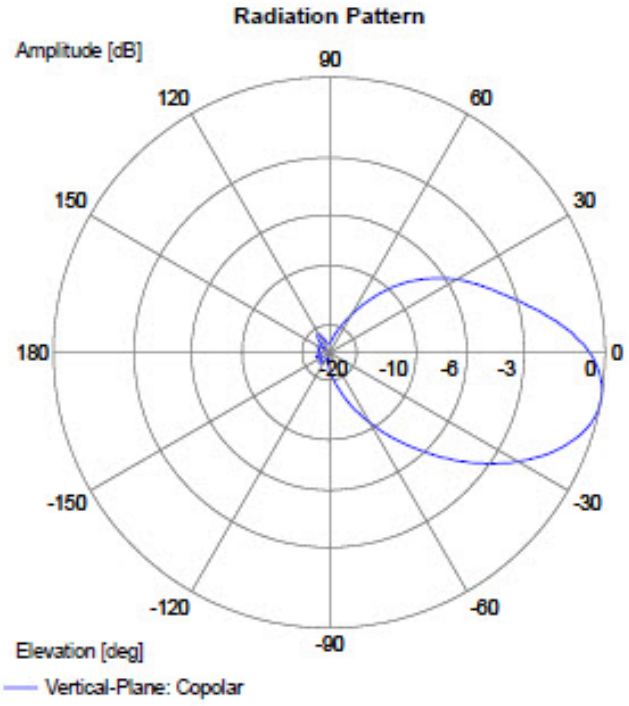

Port: right slant
Frequency: 5700 MHz

5750 MHz

Port: right slant
Frequency: 5750 MHz

Port: left slant
Frequency: 5750 MHz

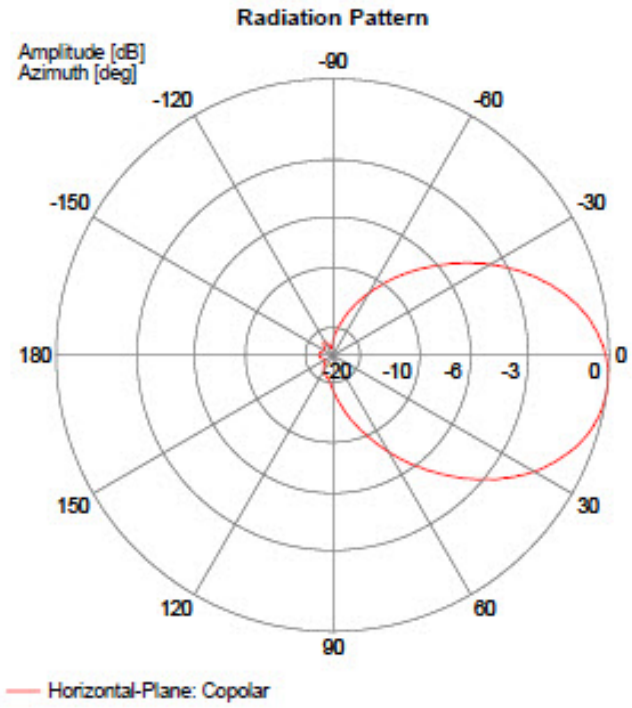

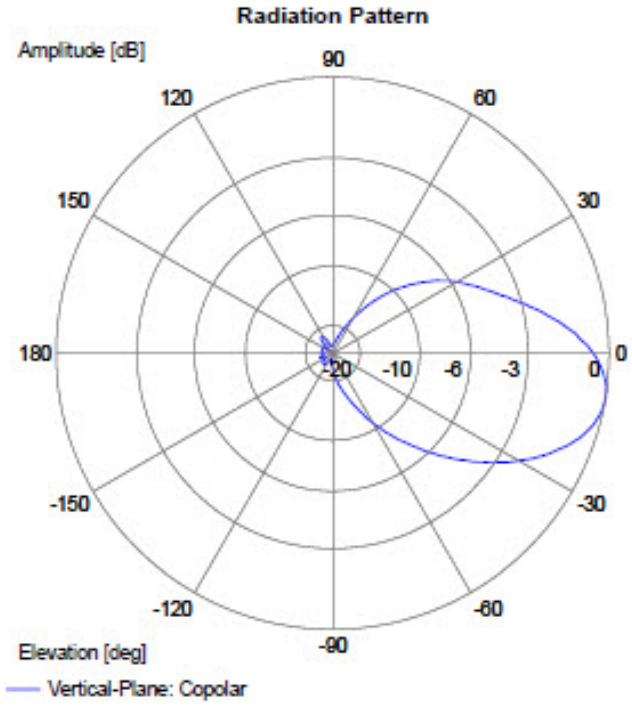

5800 MHz

Port: left slant
Frequency: 5800 MHz

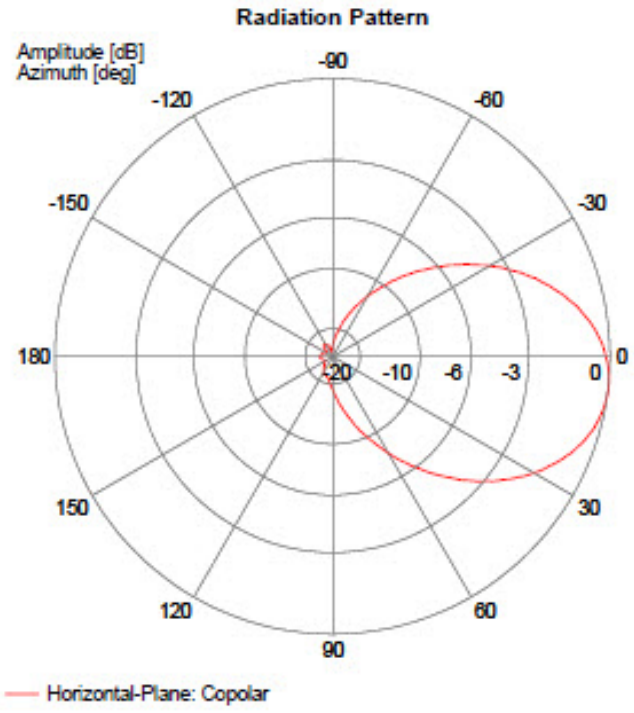

Port: right slant
Frequency: 5800 MHz

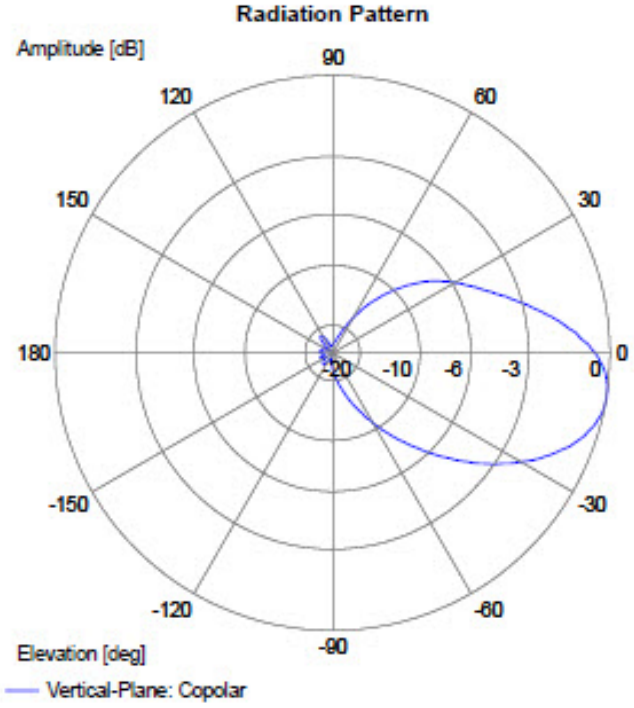

5850 MHz

Port: left slant
Frequency: 5850 MHz

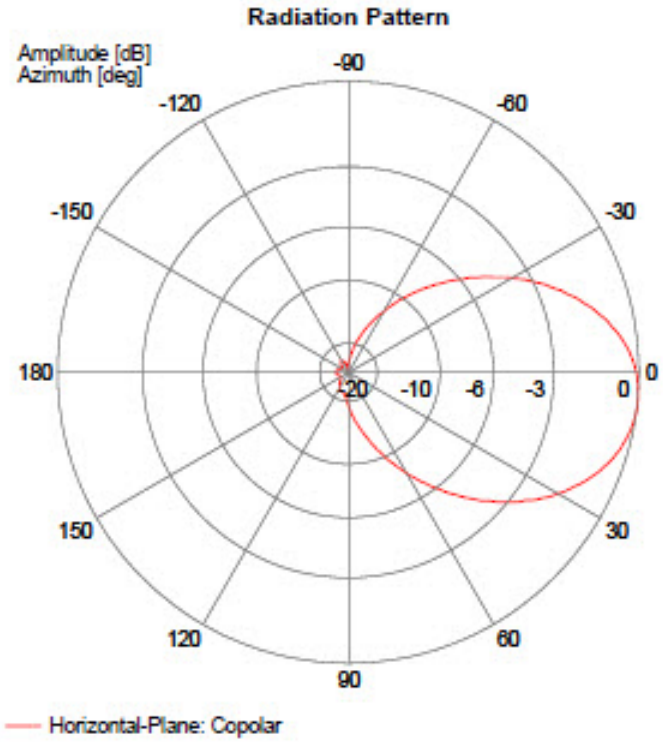

Port: right slant
Frequency: 5850 MHz

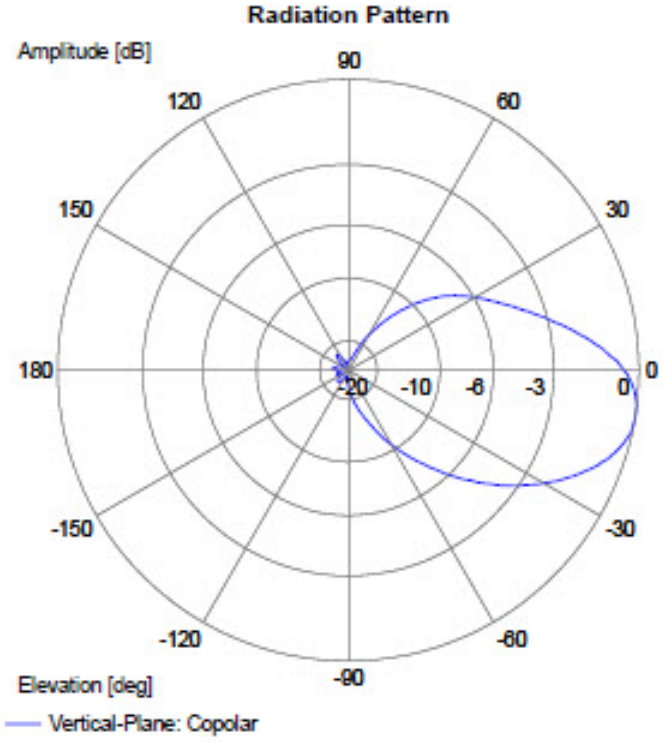

5900 MHz

Port: left slant
Frequency: 5900 MHz

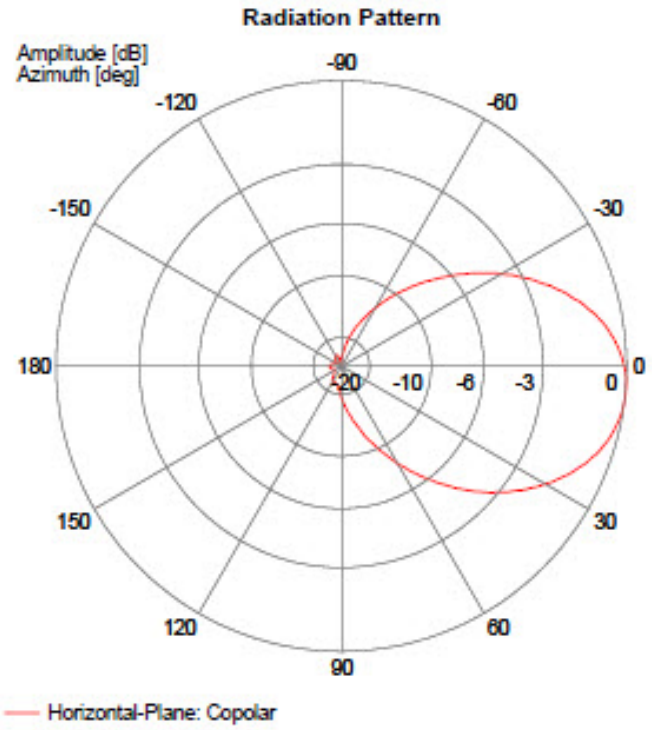

Port: right slant
Frequency: 5900 MHz



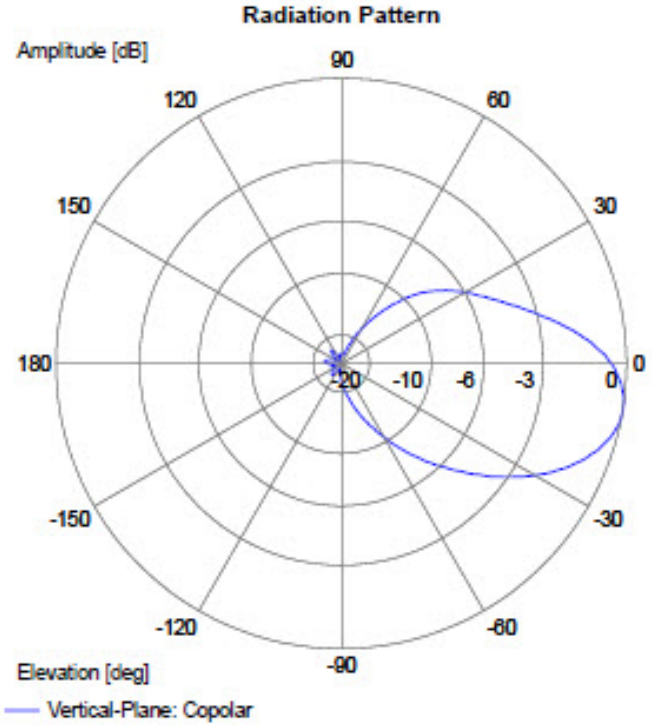



5925 MHz

5935 MHz

Port: left slant
Frequency: 5935 MHz

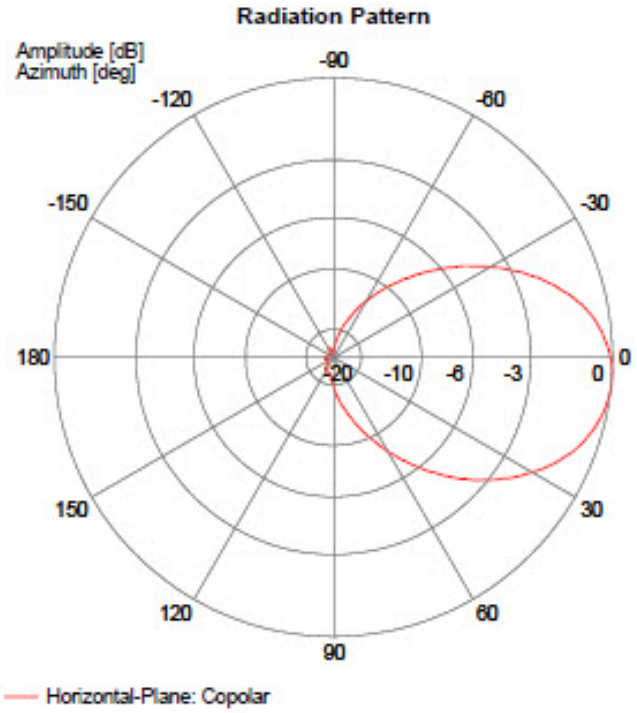

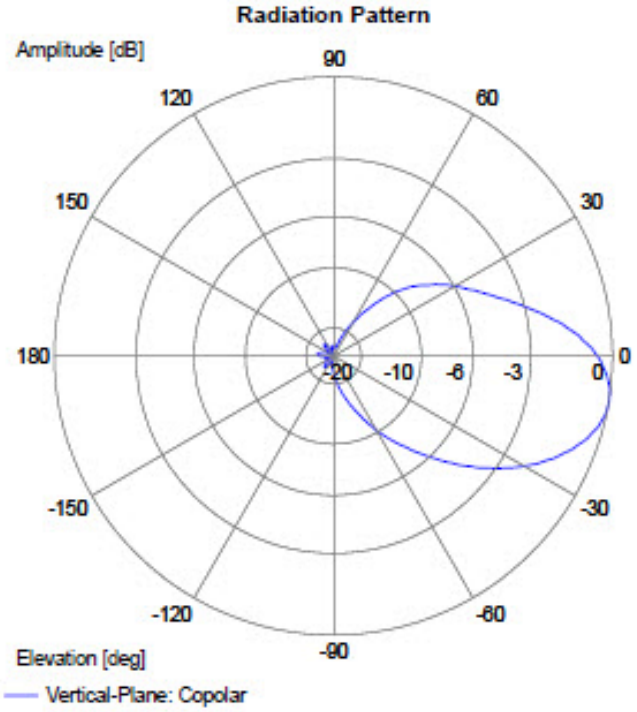

Port: right slant
Frequency: 5935 MHz

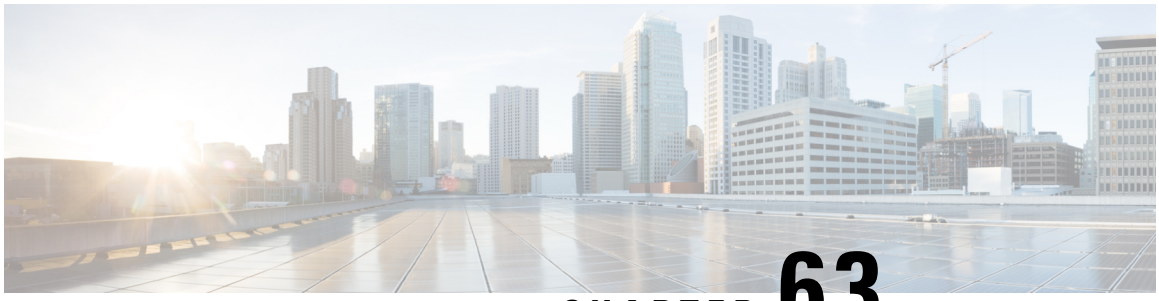

CHAPTER 63

Cisco Bi-Directional Train Top Antenna (IW-ANT-SKD-513-Q)

This chapter contains the following sections:

- Overview, on page 955
- Electrical Specifications, on page 956
- Mechanical and Environmental Specifications, on page 956
- Mechanical Drawing, on page 956
- Installation Instructions, on page 957
- Radiation Patterns, on page 957

Overview

The Cisco Bi-Directional Train Top Antenna (IW-ANT-SKD-513-Q) is a 5 GHz 13 dBi Shark bi-directional antenna with a QMA connector.

The antenna is designed to survive high vibration rail installations, including roof mounting on locomotive and passenger cars.

Figure 397: IW-ANT-SKD-513-Q Antenna



Features include the following:

- Dual feed, dual slant ± 45°, linear polarization
- Designed for metallic or non-metallic roof mounting, no ground plane required

- Extremely rugged purpose built for rail and metro applications
- Symmetrical patterns, maintains same pattern performance over each polarization
- High port-to-port performance correlation
- Designed to meet EN50155 & AAR certification requirements

Electrical Specifications

The following table is a summary of the electrical specifications:

Typical VSWR	<2:1 (max 2.5:1)
Bandwidth	4.9-5.9 GHz
Nominal Impedance	50 Ω
Gain	10-13 dBi
Beamwidth (Free Space, Non-Metallic Ground Plane)	H-Plane 42° E-Plane 28°
Beamwidth (Ground Plane Mounted)	H-Plane 39° E-Plane 21°
Polarization	Dual Slant 45°, Linear
Port-to-Port Isolation	> 22 dB

Mechanical and Environmental Specifications

The following table is a summary of the mechanical and environmental specifications:

Dimensions	8.3 x 5.5 x 3.3 inches (210 x 140 x 85 mm)
Weight	2.7 lbs
Housing Antenna Material	Aluminum, hard coat anodized
Temperature Range	-40°C to +85°C
Ingress Protection	IP56/IP67

Mechanical Drawing

The following diagram provides mechanical details of the antenna.

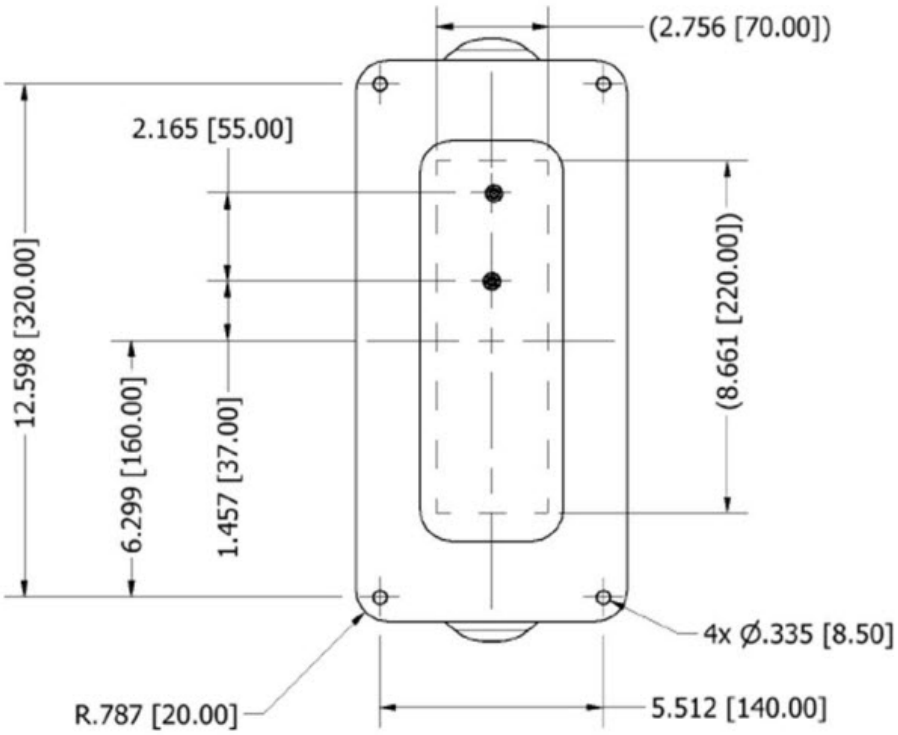

Installation Instructions

Complete details can be found in the Cisco Ultra-Reliable Wireless Backhaul FM SHARK Installation and Configuration Manual.

Radiation Patterns

The following figures show the antenna radiation patterns.

Note These radiation patterns show frequencies tested by the antenna vendor outside of the supported 4.9-5.9 GHz frequency range.

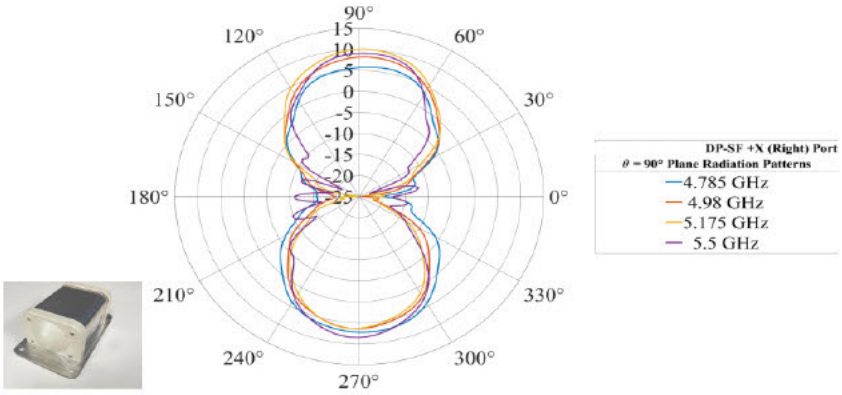
90°
120°
60°
150°
30°
180°
0°
210°
330°
240°
300°
270°
15
10
5
0
-5
-10
-15
-20
-25
DP-SF +X (Right) Port
θ = 90° Plane Radiation Patterns
4.785 GHz
4.98 GHz
5.175 GHz
5.5 GHz

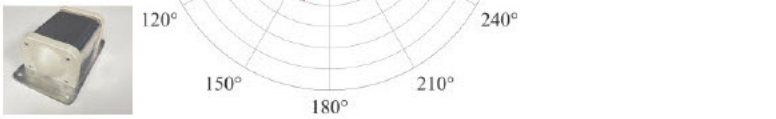
0°
30°
330°
60°
300°
90°
270°
120°
240°
150°
210°
180°
15
10
5
0
-5
-10
-15
-20
-25
DP-SF +X (Right) Port
ϕ = 90° Plane Radiation Patterns
5.89 GHz
6.41 GHz
6.735 GHz
7.125 GHz

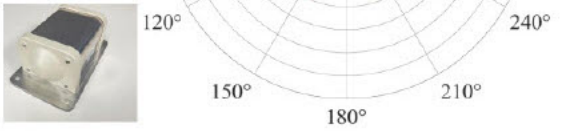

0°
30°
330°
60°
300°
90°
270°
120°
240°
150°
210°
180°
15
10
5
0
-5
-10
-15
-20
-25
DP-SF +X (Right) Port
ϕ = 90° Plane Radiation Patterns
4.785 GHz
4.98 GHz
5.175 GHz
5.5 GHz



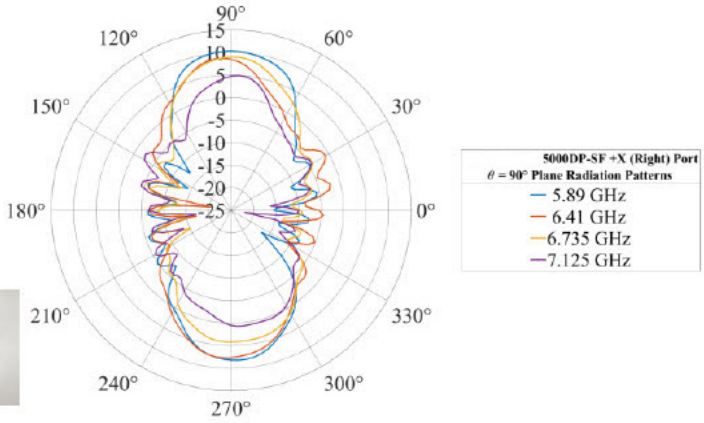
90°
120°
60°
150°
30°
180°
0°
210°
330°
240°
300°
270°
15
10
5
0
-5
-10
-15
-20
-25
5000DP-SF +X (Right) Port
θ = 90° Plane Radiation Patterns
5.89 GHz
6.41 GHz
6.735 GHz
7.125 GHz



CHAPTER 64

Cisco Directional Train Top Antenna (IW-ANT-SKS-514-Q)

This chapter contains the following sections:

- Overview, on page 961
- Electrical Specifications, on page 962
- Mechanical and Environmental Specifications, on page 962
- Mechanical Drawing, on page 962
- Installation Instructions, on page 963
- Radiation Patterns, on page 963

Overview

The Cisco Directional Train Top Antenna (IW-ANT-SKS-514-Q) is a 5 GHz 13dBi Shark directional antenna with a QMA connector.

It is designed to survive high vibration rail installations, including roof mounting on locomotive and passenger cars.

Figure 398: IW-ANT-SKS-514-Q Antenna



Features include the following:

- Dual feed, dual slant ± 45°, linear polarization
- Designed for metallic or non-metallic roof mounting, no ground plane required

- Extremely rugged purpose built for rail and metro applications
- Symmetrical patterns, maintains same pattern performance over each polarization
- High port-to-port performance correlation
- Designed to meet EN50155 & AAR certification requirements

Electrical Specifications

The following table is a summary of the electrical specifications:

Typical VSWR	<2:1 (max 2.5:1)
Bandwidth	4.9-5.9 GHz
Nominal Impedance	50 Ω
Gain	10-13 dBi
Beamwidth (Free Space, Non-Metallic Ground Plane)	H-Plane 42° E-Plane 28°
Beamwidth (Ground Plane Mounted)	H-Plane 39° E-Plane 21°
Polarization	Dual Slant 45°, Linear
Port-to-Port Isolation	> 22 dB

Mechanical and Environmental Specifications

The following table is a summary of the mechanical and environmental specifications:

Dimensions	8.3 x 5.5 x 3.3 inches (210 x 140 x 85 mm)
Weight	2.7 lbs
Housing Antenna Material	Aluminum, hard coat anodized
Temperature Range	-40°C to +85°C
Ingress Protection	IP56/IP67

Mechanical Drawing

The following diagram provides mechanical details of the antenna.

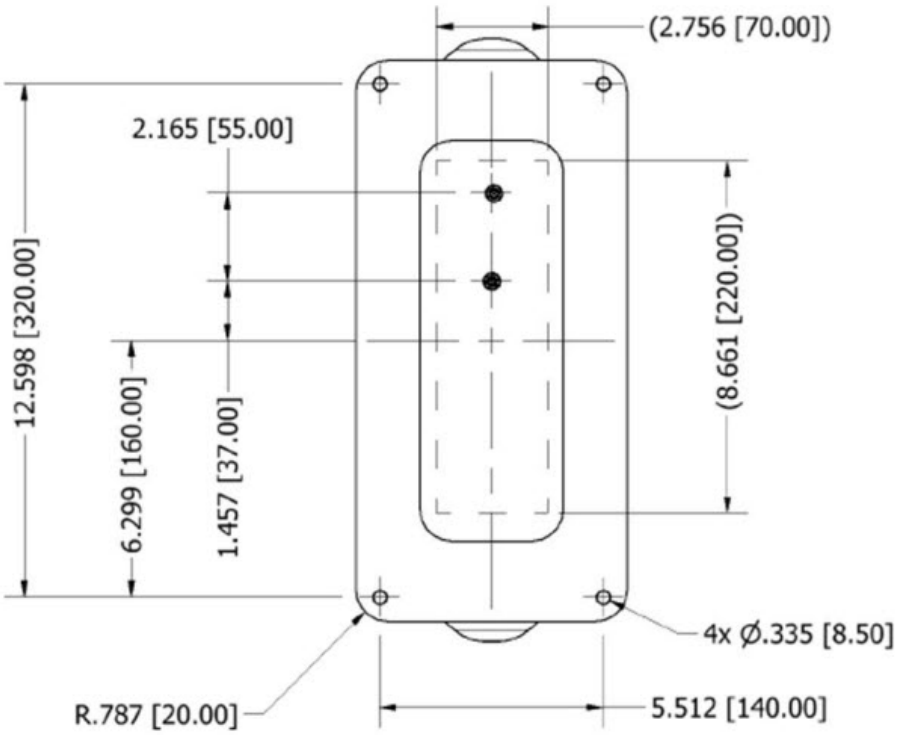

Installation Instructions

Complete details can be found in the Cisco Ultra-Reliable Wireless Backhaul FM SHARK Installation and Configuration Manual.

Radiation Patterns

The following figures show the antenna radiation patterns.

Note These radiation patterns show frequencies tested by the antenna vendor outside of the supported 4.9-5.9 GHz frequency range.

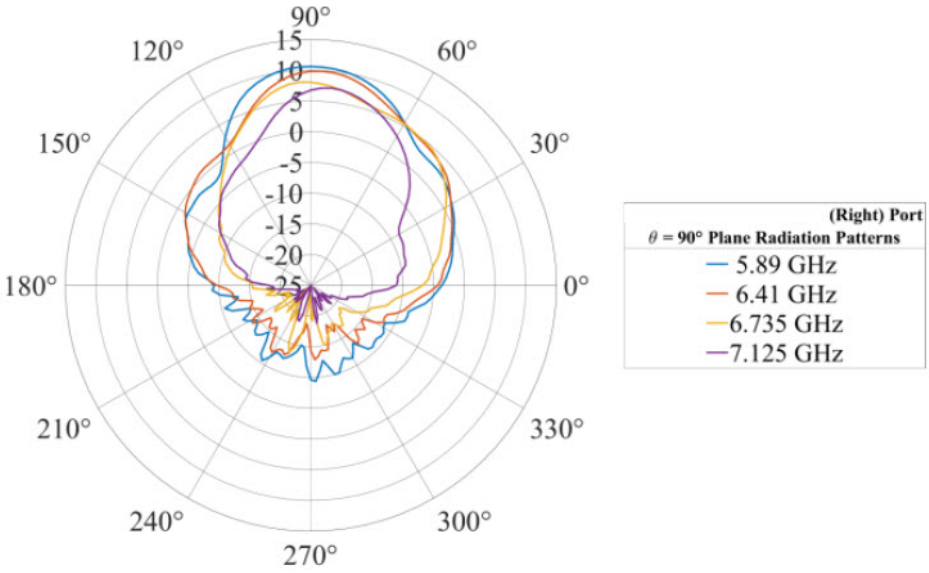
90°
120°
60°
150°
30°
180°
0°
210°
330°
240°
300°
270°
15
10
5
0
-5
-10
-15
-20
-25
(Right) Port
θ = 90° Plane Radiation Patterns
5.89 GHz
6.41 GHz
6.735 GHz
7.125 GHz

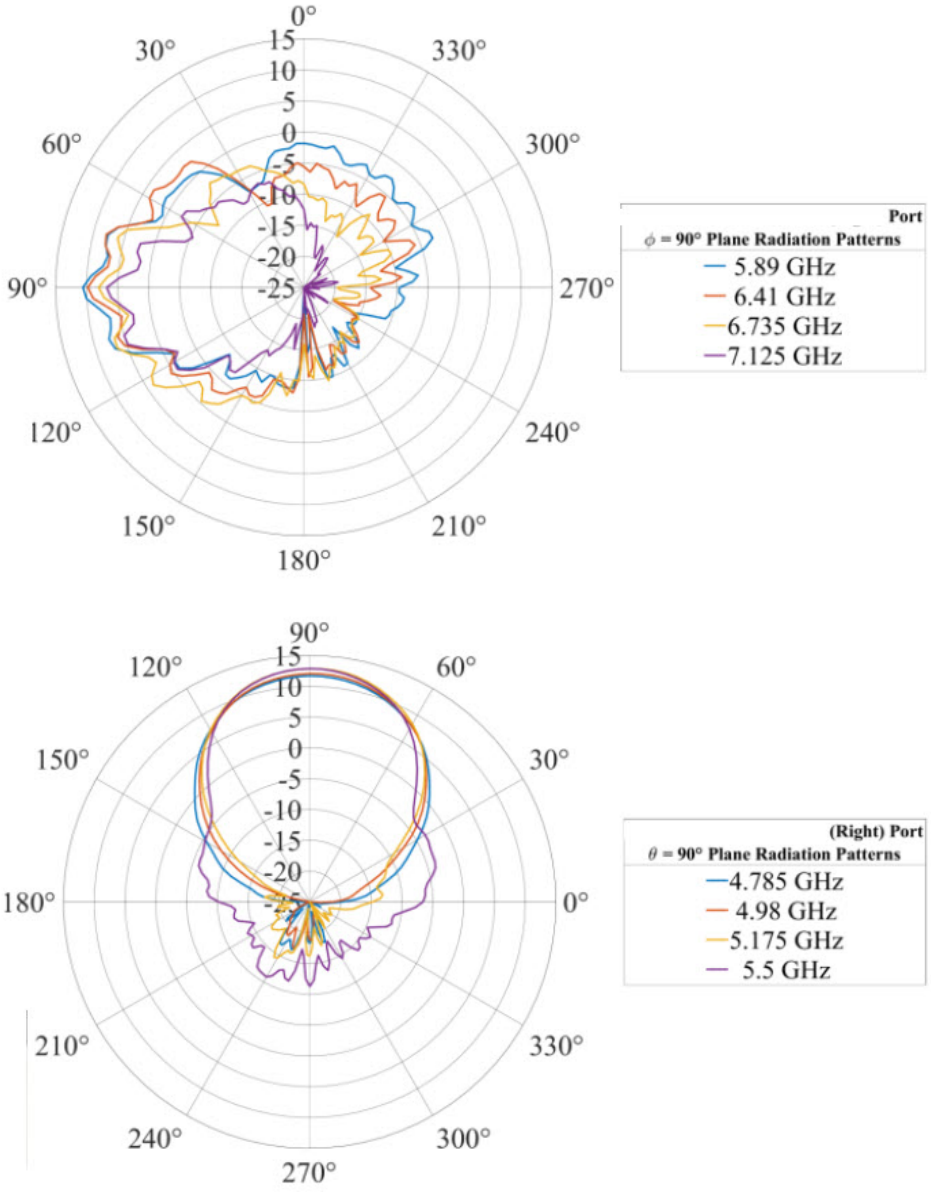
0°
30°
330°
60°
300°
90°
270°
120°
240°
150°
210°
180°
15
10
5
0
-5
-10
-15
-20
-25
Port
ϕ = 90° Plane Radiation Patterns
5.89 GHz
6.41 GHz
6.735 GHz
7.125 GHz
90°
120°
60°
150°
30°
180°
0°
210°
330°
240°
300°
270°
(Right) Port
θ = 90° Plane Radiation Patterns
4.785 GHz
4.98 GHz
5.175 GHz
5.5 GHz

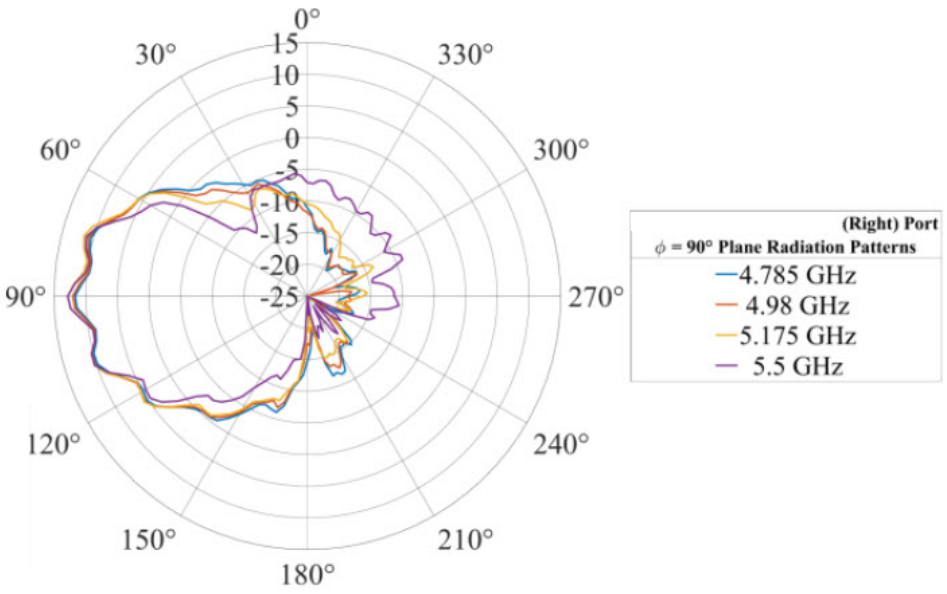
0°
30°
330°
60°
300°
90°
270°
120°
240°
150°
210°
180°
15
10
5
0
-5
-10
-15
-20
-25
(Right) Port
ϕ = 90° Plane Radiation Patterns
4.785 GHz
4.98 GHz
5.175 GHz
5.5 GHz

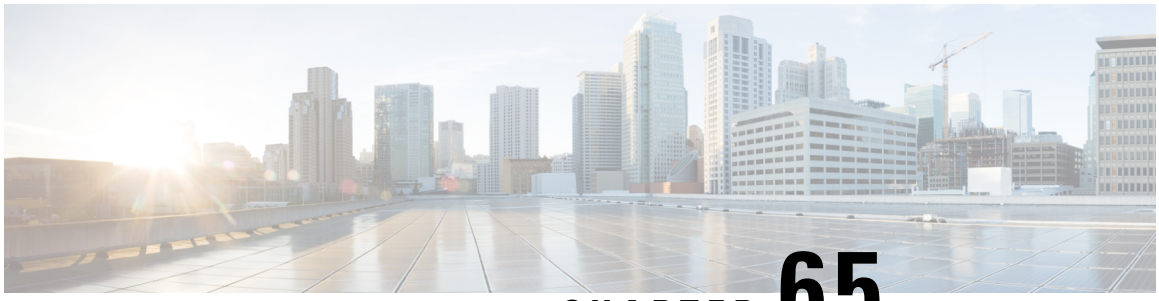

CHAPTER 65

Cisco Dual Polarization Base Station Antenna (IW-ANT-SS9-516-N)

This chapter contains the following sections:

- Overview, on page 967
- Electrical Specifications, on page 968
- Mechanical Specifications, on page 969
- Environmental Specifications, on page 969
- Mechanical Drawing, on page 970
- Installation Instructions, on page 971
- Radiation Patterns, on page 971

Overview

The Cisco Dual Polarization Base Station Antenna (IW-ANT-SS9-516-N) is designed to cover a frequency range of 4.9 to 6.425 GHz. This antenna is designed for point-to-multipoint connectivity in smart cities (coverage for parking lots, building-to-building connectivity etc), or ports and mines.

Figure 399: IW-ANT-SS9-516-N Antenna



Features include the following:

- Compact size
- Relative high gain

Electrical Specifications

The following table is a summary of the electrical specifications:

Antenna Type	Dual Polarization Base Station
Frequency Range	4.9 - 6.425 GHz
Input Impedance	50 Ω
Gain	16 dBi (typ)
VSWR	1.7:1 (typ) 2:1 (max)
Polarization	Dual Linear Vertical + Horizontal
-3dB Elevation Beamwidth	7º (typ)
-3dB Azimuth Beamwidth	90º (typ)
Azimuth Side Lobe Level	Port V- ETSI EN 302 326-3 V1.3.1 CS2 Port H-ETSI EN 302 326-3 V1.3.1 CS2

F/B Ratio	30 dB (min)
Cross Polarization	-20 dB (typ)
Port to Port Isolation	45 dB (typ) 42 dB (min)
Power	6W (max)
Lightning Protection	DC Grounded

Mechanical Specifications

The following table is a summary of the mechanical specifications:

Dimensions (L x W x D)	371 x 371 x 40 mm (max)
Weight	2 kg (max)
Radome Material	Plastic
Base Plate Material	Aluminum with chemical conversion coating
Connector type	2X N-Type Female

Environmental Specifications

The following table is a summary of the mechanical specifications:

Test	Standard	Duration	Temperature	Notes
Low Temperature	IEC 68-2-1	72 hours	-55° C	—
High Temperature	IEC 68-2-2	72 hours	+71° C	—
Temperature Cycling	IEC 68-2-14	1 hour	-45°C +70°C	3 Cycles
Vibration	IEC 60721-3-4	30 min/axis	—	Random 4M3
Mechanical Shock	IEC 60721-3-4	4M3	—	4M3
Humidity	ETSI EN300-2-4 T4.1E	144 hours	—	95%
Water Tightness	IEC 529	—	—	IP67
Solar Radiation	ASTM G53	1000 hours	—	—
Flamibility	UL 94	—	—	Class HB

Test	Standard	Duration	Temperature	Notes
Salt Spray	IEC 68-2-11 Ka	500 hours	—	—
Ice and Snow	—	—	—	25mm Radial
Wind Speed Survival	—	—	—	220 Km/h
Wind Speed Operation	—	—	—	160 Km/h
Wind Load (Survival)	—	—	—	Front Thrust 39.6 kg Side Thrust 4.3 kg

Mechanical Drawing

The following diagram provides mechanical details of the antenna.

Note All measurements are in millimeters.

Figure 400: Mechanical Drawing

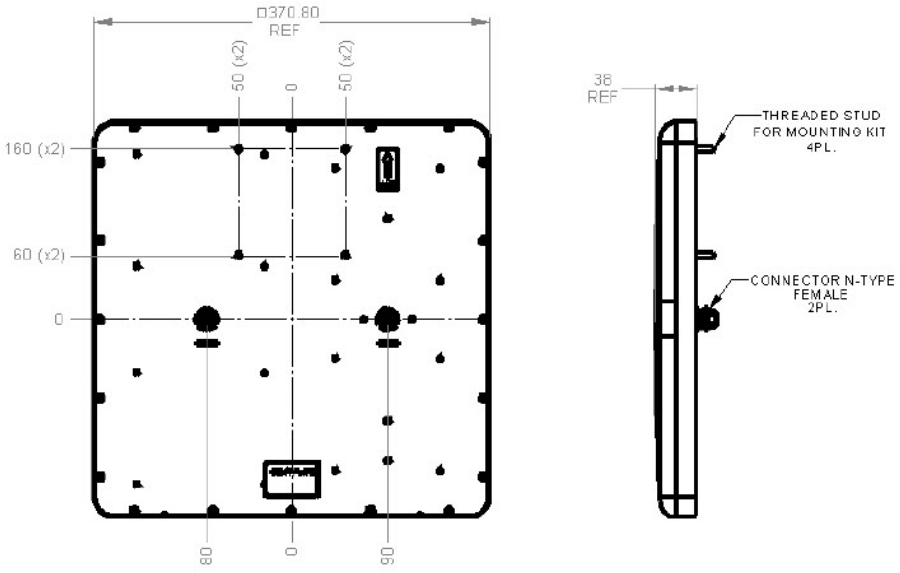

Installation Instructions

This antenna uses the ATLAS MTI RFID Antenna Mounting Kit - MT-120018. Follow the link for complete installation instructions.

Radiation Patterns

The following figures show the antenna radiation patterns.

4.9 GHz

Figure 401: Horizontal

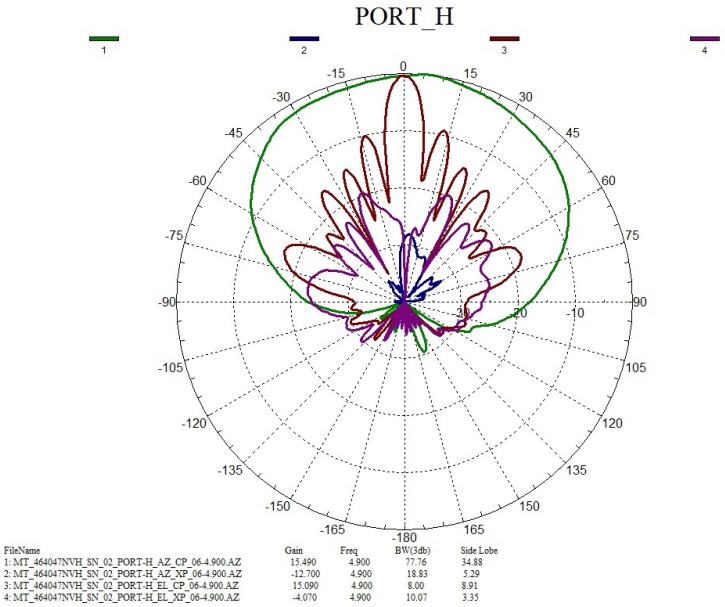

FileName	Gain	Freq	BW(3db)	Side Lobe
1: MT_464047NVH_SN_02_PORT-H_AZ_CP_06-4.900.AZ	15.490	4.900	77.76	34.88
2: MT_464047NVH_SN_02_PORT-H_AZ_XP_06-4.900.AZ	-12.700	4.900	18.83	5.29
3: MT_464047NVH_SN_02_PORT-H_EL_CP_06-4.900.AZ	15.090	4.900	8.00	8.91
4: MT_464047NVH_SN_02_PORT-H_EL_XP_06-4.900.AZ	-4.070	4.900	10.07	3.35

Figure 402: Vertical

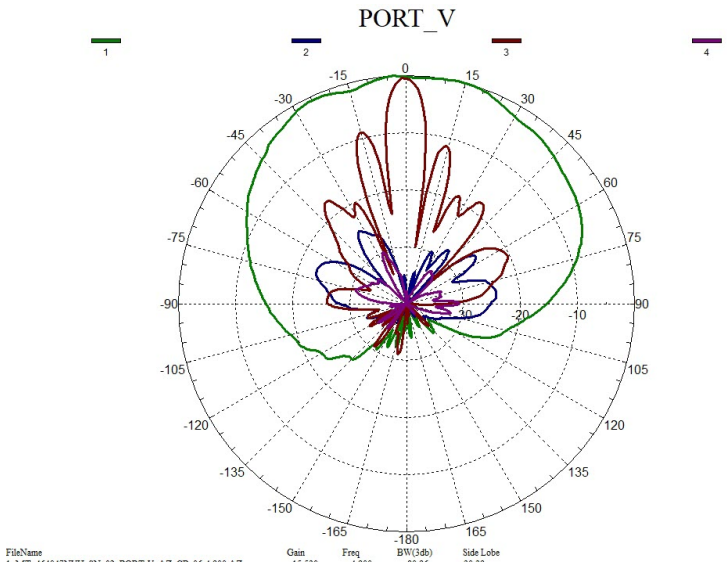

FileName	Gain	Freq	BW(3db)	Side Lobe
1: MT_464047NVH_SN_02_PORT-V_AZ_CP_06-4.900.AZ	15.530	4.900	80.96	30.39
2: MT_464047NVH_SN_02_PORT-V_AZ_XP_06-4.900.AZ	-7.740	4.900	23.86	1.63
3: MT_464047NVH_SN_02_PORT-V_EL_CP_06-4.900.AZ	15.030	4.900	8.26	8.51
4: MT_464047NVH_SN_02_PORT-V_EL_XP_06-4.900.AZ	-14.630	4.900	12.37	2.67

5.1 GHz

Figure 403: Horizontal

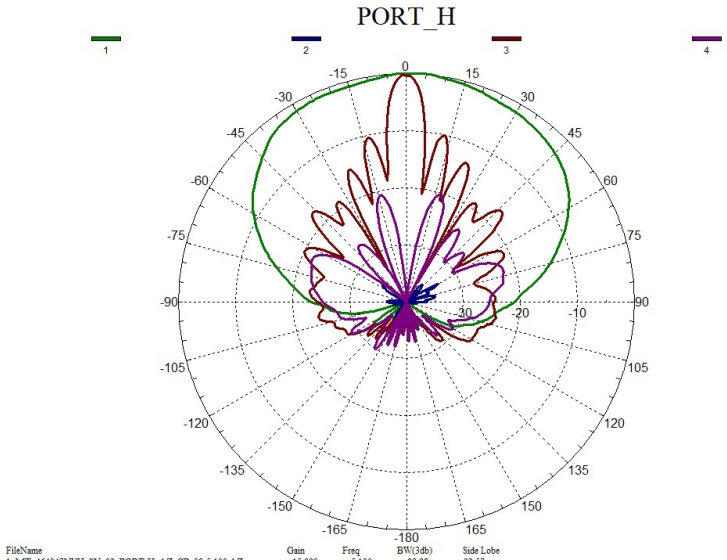

FileName	Gain	Freq	BW(3db)	Side Lobe
1: MT_464047NVH_SN_02_PORT-H_AZ_CP_08-5.100.AZ	15.990	5.100	83.98	32.57
2: MT_464047NVH_SN_02_PORT-H_AZ_XP_08-5.100.AZ	-17.640	5.100	12.46	1.27
3: MT_464047NVH_SN_02_PORT-H_EL_CP_08-5.100.AZ	15.780	5.100	7.82	9.94
4: MT_464047NVH_SN_02_PORT-H_EL_XP_08-5.100.AZ	-4.380	5.100	8.96	0.49

Figure 404: Vertical

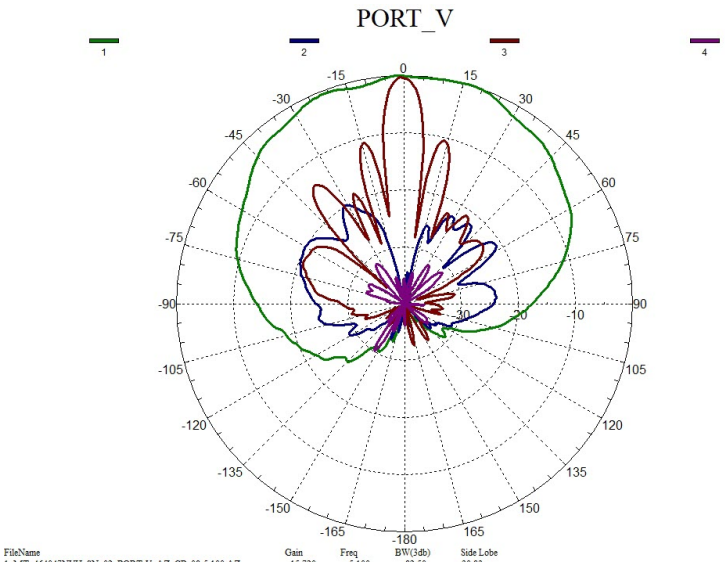

FileName	Gain	Freq	BW(3db)	Side Lobe
1: MT_464047NVH_SN_02_PORT-V_AZ_CP_08-5.100.AZ	15.720	5.100	82.50	30.83
2: MT_464047NVH_SN_02_PORT-V_AZ_XP_08-5.100.AZ	-4.260	5.100	35.09	0.01
3: MT_464047NVH_SN_02_PORT-V_EL_CP_08-5.100.AZ	15.330	5.100	8.28	10.19
4: MT_464047NVH_SN_02_PORT-V_EL_XP_08-5.100.AZ	-14.490	5.100	6.46	4.63

5.3 GHz

Figure 405: Horizontal

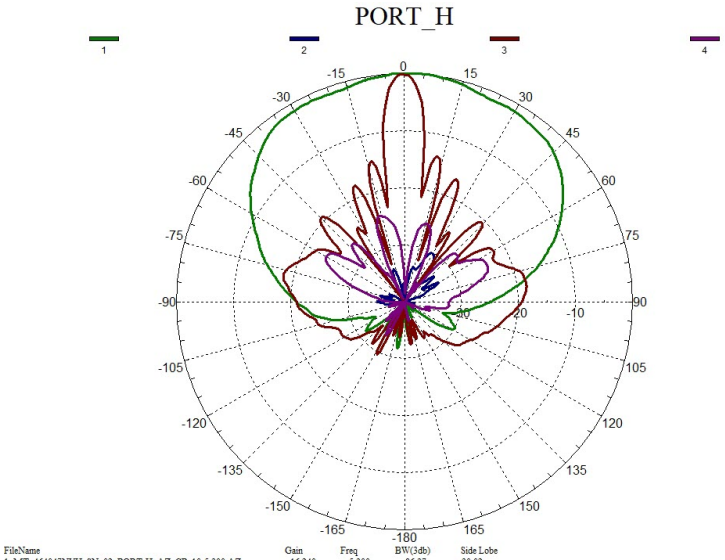

FileName	Gain	Freq	BW(3db)	Side Lobe
1: MT_464047NVH_SN_02_PORT-H_AZ_CP_10-5.300.AZ	16.240	5.300	86.37	30.02
2: MT_464047NVH_SN_02_PORT-H_AZ_XP_10-5.300.AZ	-13.940	5.300	15.06	3.10
3: MT_464047NVH_SN_02_PORT-H_EL_CP_10-5.300.AZ	16.160	5.300	8.13	13.84
4: MT_464047NVH_SN_02_PORT-H_EL_XP_10-5.300.AZ	-7.950	5.300	14.41	2.21

Figure 406: Vertical

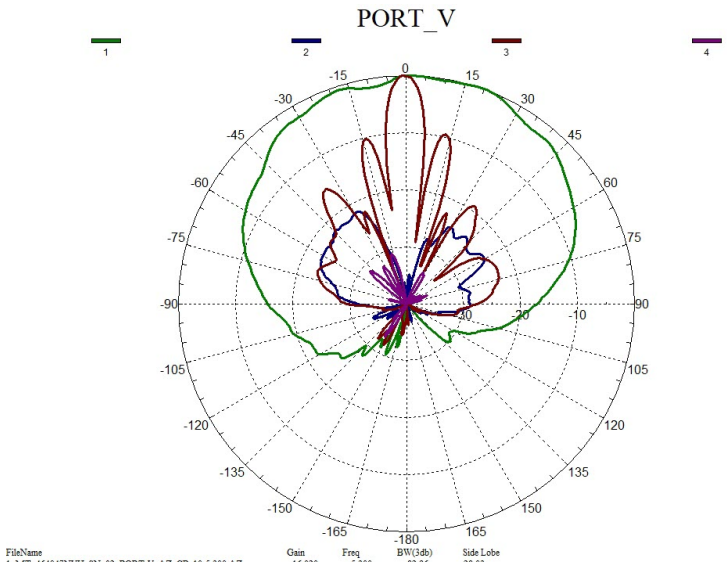

FileName	Gain	Freq	BW(3db)	Side Lobe
1: MT_464047NVH_SN_02_PORT-V_AZ_CP_10-5.300.AZ	16.020	5.300	82.96	28.03
2: MT_464047NVH_SN_02_PORT-V_AZ_XP_10-5.300.AZ	-5.710	5.300	47.55	11.95
3: MT_464047NVH_SN_02_PORT-V_EL_CP_10-5.300.AZ	15.980	5.300	7.82	9.50
4: MT_464047NVH_SN_02_PORT-V_EL_XP_10-5.300.AZ	-14.900	5.300	8.69	1.48

5.5 GHz

Figure 407: Horizontal

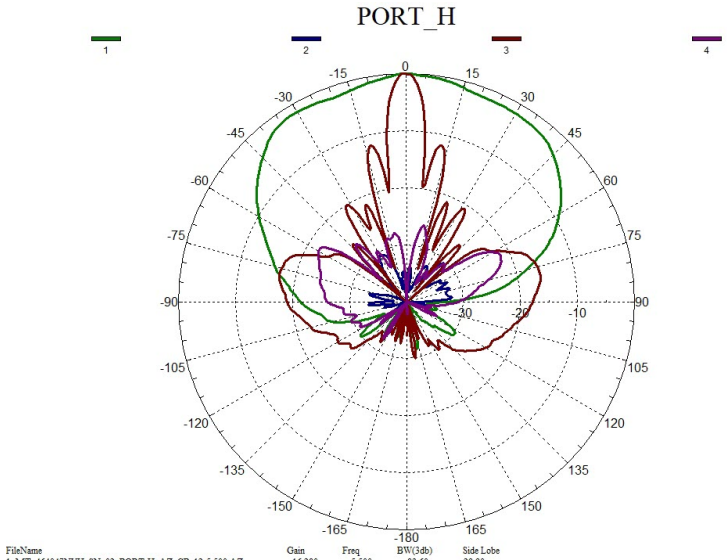

FileName	Gain	Freq	BW(3db)	Side Lobe
1: MT_464047NVH_SN_02_PORT-H_AZ_CP_12-5.500.AZ	16.280	5.500	83.60	29.90
2: MT_464047NVH_SN_02_PORT-H_AZ_XP_12-5.500.AZ	-14.250	5.500	9.91	2.21
3: MT_464047NVH_SN_02_PORT-H_EL_CP_12-5.500.AZ	16.330	5.500	7.57	11.95
4: MT_464047NVH_SN_02_PORT-H_EL_XP_12-5.500.AZ	-5.350	5.500	17.60	8.90

Figure 408: Vertical

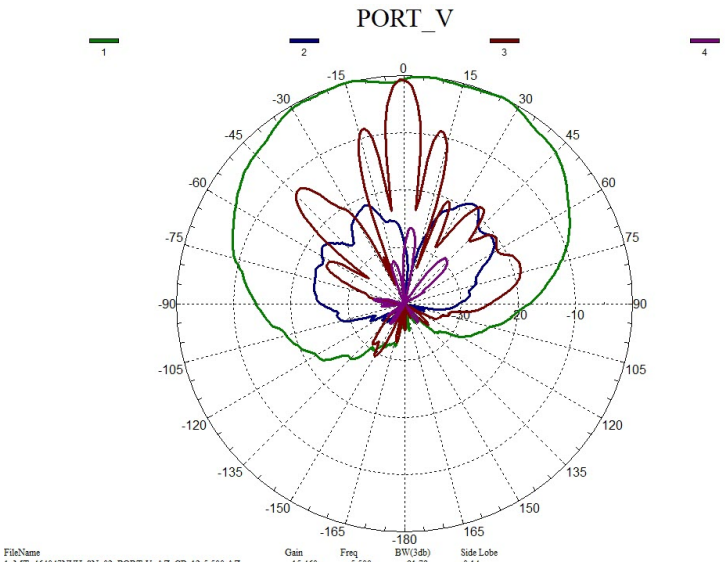

FileName	Gain	Freq	BW(3db)	Side Lobe
1: MT_464047NVH_SN_02_PORT-V_AZ_CP_12-5.500.AZ	15.460	5.500	91.79	0.14
2: MT_464047NVH_SN_02_PORT-V_AZ_XP_12-5.500.AZ	-3.240	5.500	32.88	6.55
3: MT_464047NVH_SN_02_PORT-V_EL_CP_12-5.500.AZ	14.770	5.500	7.29	7.88
4: MT_464047NVH_SN_02_PORT-V_EL_XP_12-5.500.AZ	-11.240	5.500	9.58	5.60

5.7 GHz

Figure 409: Horizontal

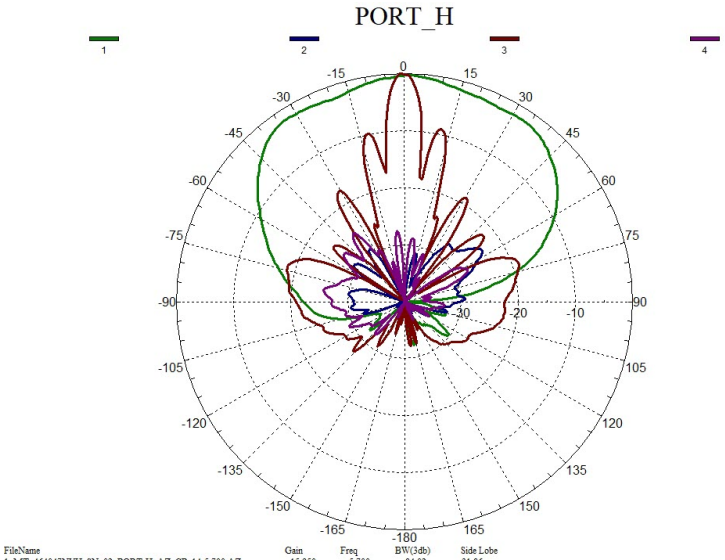

FileName	Gain	Freq	BW(3db)	Side Lobe
1: MT_464047NVH_SN_02_PORT-H_AZ_CP_14-5.700.AZ	15.950	5.700	84.02	31.86
2: MT_464047NVH_SN_02_PORT-H_AZ_XP_14-5.700.AZ	-7.500	5.700	16.91	5.60
3: MT_464047NVH_SN_02_PORT-H_EL_CP_14-5.700.AZ	16.280	5.700	6.97	9.11
4: MT_464047NVH_SN_02_PORT-H_EL_XP_14-5.700.AZ	-8.760	5.700	8.90	1.48

Figure 410: Vertical

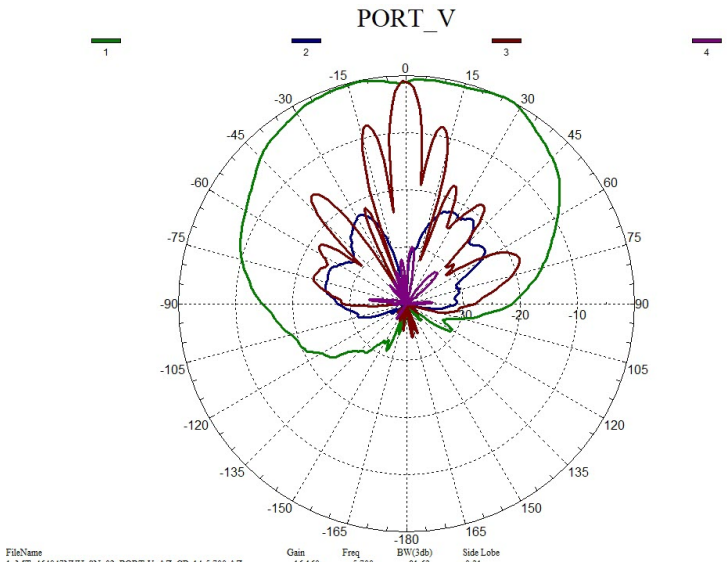

FileName	Gain	Freq	BW(3db)	Side Lobe
1: MT_464047NVH_SN_02_PORT-V_AZ_CP_14-5.700.AZ	16.160	5.700	81.63	0.31
2: MT_464047NVH_SN_02_PORT-V_AZ_XP_14-5.700.AZ	-5.140	5.700	26.47	1.17
3: MT_464047NVH_SN_02_PORT-V_EL_CP_14-5.700.AZ	15.180	5.700	6.72	7.06
4: MT_464047NVH_SN_02_PORT-V_EL_XP_14-5.700.AZ	-13.920	5.700	7.31	2.12

5.9 GHz

Figure 411: Horizontal

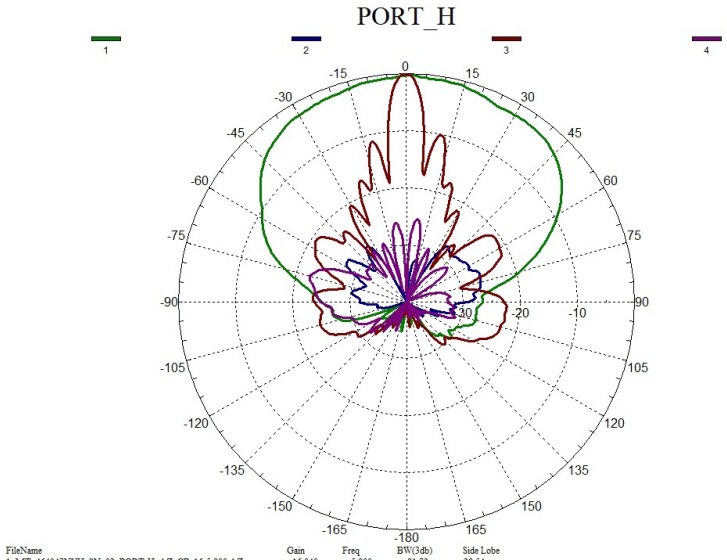

FileName	Gain	Freq	BW(3db)	Side Lobe
1: MT_464047NVH_SN_02_PORT-H_AZ_CP_16-5.900.AZ	16.040	5.900	81.73	29.54
2: MT_464047NVH_SN_02_PORT-H_AZ_XP_16-5.900.AZ	-9.980	5.900	56.91	1.19
3: MT_464047NVH_SN_02_PORT-H_EL_CP_16-5.900.AZ	16.330	5.900	6.96	10.22
4: MT_464047NVH_SN_02_PORT-H_EL_XP_16-5.900.AZ	-6.200	5.900	24.87	8.59

Figure 412: Vertical

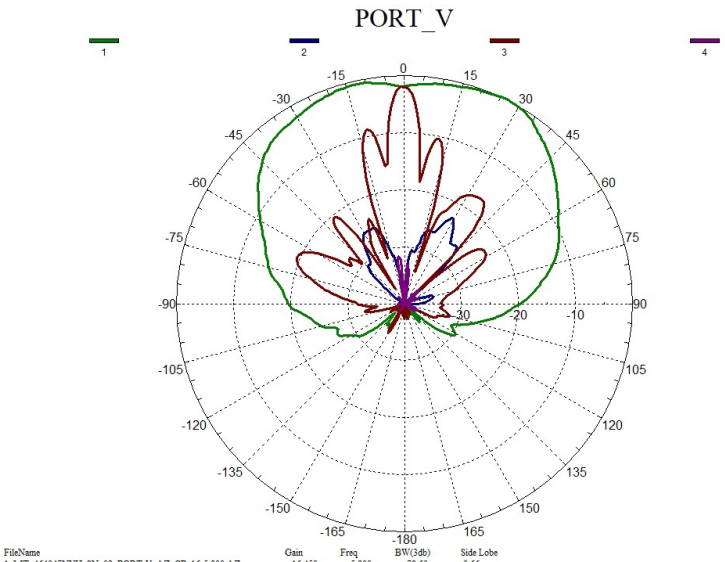

FileName	Gain	Freq	BW(3db)	Side Lobe
1: MT_464047NVH_SN_02_PORT-V_AZ_CP_16-5.900.AZ	16.450	5.900	78.60	0.66
2: MT_464047NVH_SN_02_PORT-V_AZ_XP_16-5.900.AZ	-6.420	5.900	11.34	2.81
3: MT_464047NVH_SN_02_PORT-V_EL_CP_16-5.900.AZ	14.590	5.900	6.70	6.99
4: MT_464047NVH_SN_02_PORT-V_EL_XP_16-5.900.AZ	-15.200	5.900	6.26	1.45

6.1 GHz

Figure 413: Horizontal

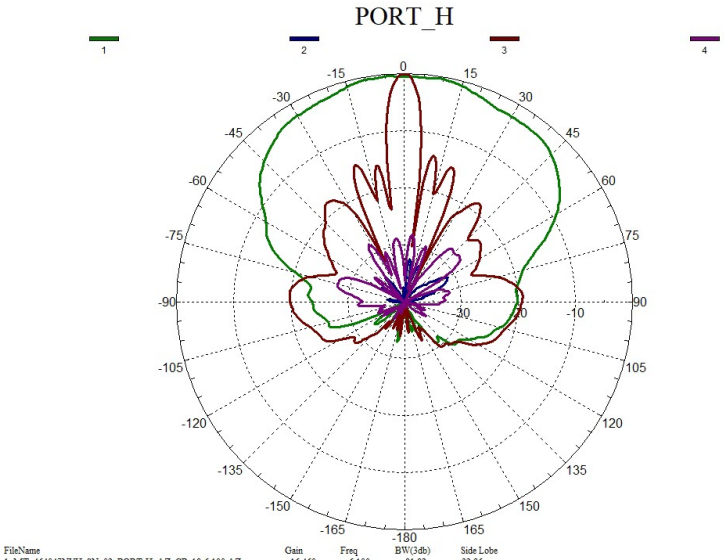

FileName	Gain	Freq	BW(3db)	Side Lobe
1: MT_464047NVH_SN_02_PORT-H_AZ_CP_18-6.100.AZ	16.460	6.100	81.82	32.96
2: MT_464047NVH_SN_02_PORT-H_AZ_XP_18-6.100.AZ	-14.400	6.100	16.39	2.05
3: MT_464047NVH_SN_02_PORT-H_EL_CP_18-6.100.AZ	16.900	6.100	6.83	13.91
4: MT_464047NVH_SN_02_PORT-H_EL_XP_18-6.100.AZ	-10.550	6.100	20.17	2.14

Figure 414: Vertical

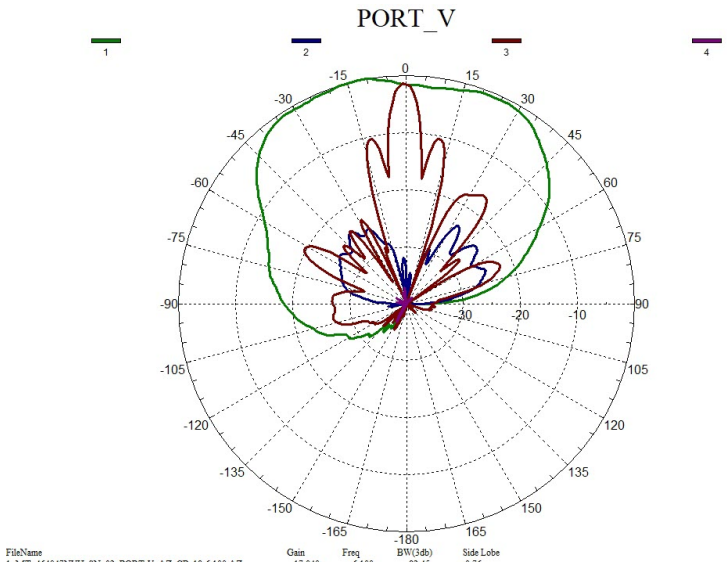

FileName	Gain	Freq	BW(3db)	Side Lobe
1: MT_464047NVH_SN_02_PORT-V_AZ_CP_18-6.100.AZ	17.040	6.100	82.45	0.76
2: MT_464047NVH_SN_02_PORT-V_AZ_XP_18-6.100.AZ	-6.550	6.100	8.80	0.69
3: MT_464047NVH_SN_02_PORT-V_EL_CP_18-6.100.AZ	15.610	6.100	6.60	9.08
4: MT_464047NVH_SN_02_PORT-V_EL_XP_18-6.100.AZ	-19.340	6.100	7.71	4.54

6.3 GHz

Figure 415: Horizontal

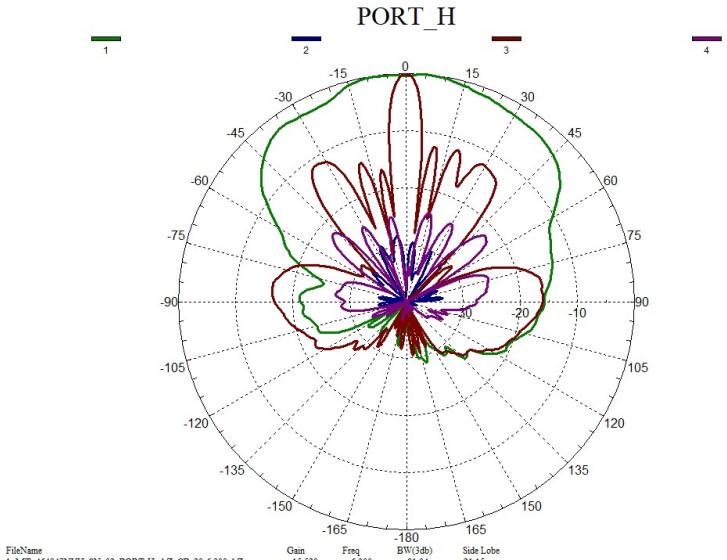

FileName	Gain	Freq	BW(3db)	Side Lobe
1: MT_464047NVH_SN_02_PORT-H_AZ_CP_20-6.300.AZ	15.520	6.300	81.04	21.15
2: MT_464047NVH_SN_02_PORT-H_AZ_XP_20-6.300.AZ	-12.670	6.300	10.52	0.98
3: MT_464047NVH_SN_02_PORT-H_EL_CP_20-6.300.AZ	15.630	6.300	6.65	12.54
4: MT_464047NVH_SN_02_PORT-H_EL_XP_20-6.300.AZ	-6.450	6.300	11.38	2.16

Figure 416: Vertical

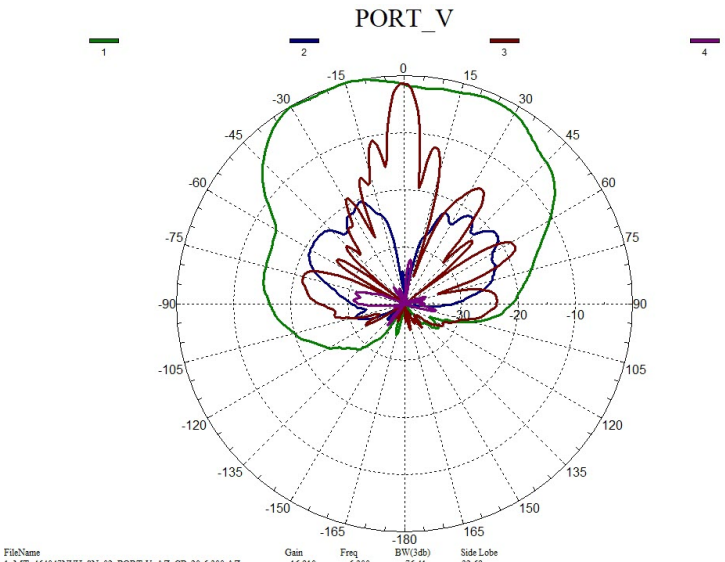

FileName	Gain	Freq	BW(3db)	Side Lobe
1: MT_464047NVH_SN_02_PORT-V_AZ_CP_20-6.300.AZ	16.910	6.300	76.41	32.69
2: MT_464047NVH_SN_02_PORT-V_AZ_XP_20-6.300.AZ	-2.860	6.300	17.79	1.07
3: MT_464047NVH_SN_02_PORT-V_EL_CP_20-6.300.AZ	15.590	6.300	6.71	9.64
4: MT_464047NVH_SN_02_PORT-V_EL_XP_20-6.300.AZ	-14.150	6.300	20.81	6.94

6.5 GHz

Figure 417: Horizontal

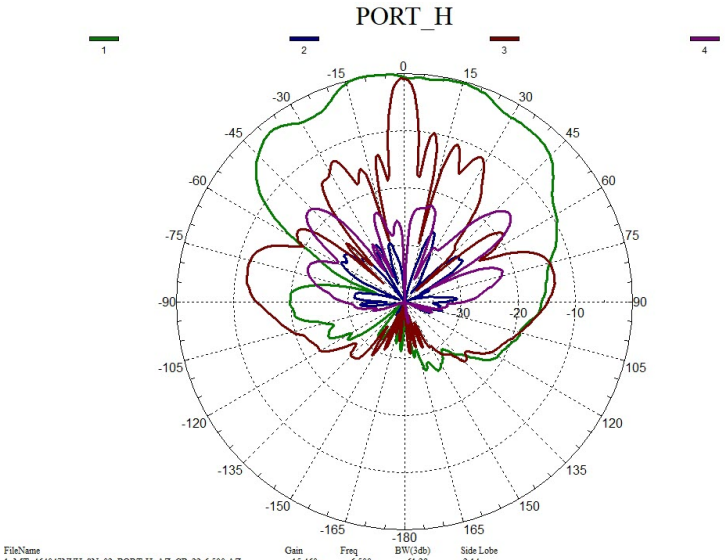

FileName	Gain	Freq	BW(3db)	Side Lobe
1: MT_464047NVH_SN_02_PORT-H_AZ_CP_22-6.500.AZ	15.460	6.500	61.29	2.14
2: MT_464047NVH_SN_02_PORT-H_AZ_XP_22-6.500.AZ	-11.230	6.500	15.82	2.19
3: MT_464047NVH_SN_02_PORT-H_EL_CP_22-6.500.AZ	14.670	6.500	6.54	9.20
4: MT_464047NVH_SN_02_PORT-H_EL_XP_22-6.500.AZ	-0.540	6.500	12.36	6.08

Figure 418: Vertical

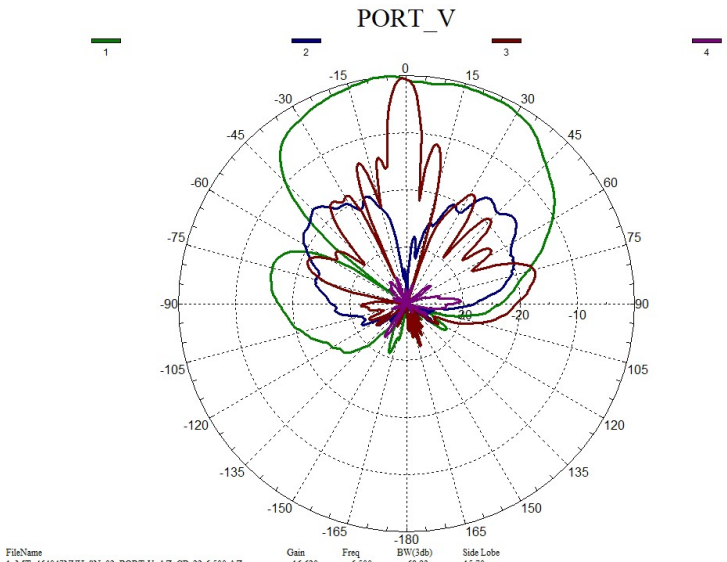

FileName	Gain	Freq	BW(3db)	Side Lobe
1: MT_464047NVH_SN_02_PORT-V_AZ_CP_22-6.500.AZ	16.620	6.500	68.93	15.70
2: MT_464047NVH_SN_02_PORT-V_AZ_XP_22-6.500.AZ	0.680	6.500	27.37	0.52
3: MT_464047NVH_SN_02_PORT-V_EL_CP_22-6.500.AZ	16.150	6.500	7.01	11.09
4: MT_464047NVH_SN_02_PORT-V_EL_XP_22-6.500.AZ	-13.800	6.500	14.23	2.61

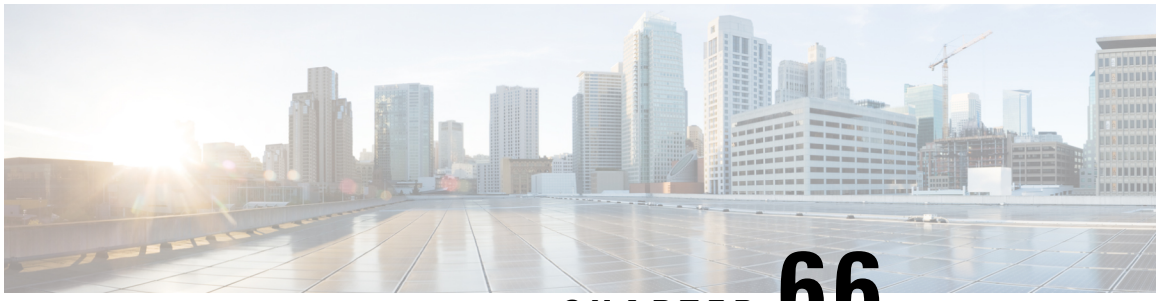

CHAPTER 66

Cisco 4G LTEA, 4G LTE, and 3G Omnidirectional Dipole Antenna (LTE-ANTM-SMA-D)

This chapter contains the following:

- Overview, on page 981
- Specifications, on page 982
- Antenna Radiation Patterns, on page 984
- General Safety Precautions, on page 989
- Guidelines to Achieving Optimal RF and Antenna Performance, on page 991
- Installation Instructions, on page 994
- Related Documentation , on page 995
- Communications, Services, and Additional Information, on page 995

Overview

This document provides the description, supported features, and installation instructions for the Cisco 3G/4G LTE and LTEA Omnidirectional Dipole Antenna (LTE-ANTM-SMA-D).

The LTE-ANTM-SMA-D omnidirectional dipole antenna is designed for indoor use with Cisco 4G Long Term Evolution (LTE) and Long Term Evolution Advanced (LTEA) Service Routers (ISRs) and Pluggable Modules with an SMA connector.

The LTE-ANTM-SMA-D antenna is marked with a dual green band to indicate that it supports Cisco LTEA routers and modules.

This antenna has the following features:

- Support for frequencies of 698-960, 1448-1511, and 1710-2690 MHz.
- Standalone antenna peak gain of less than 3.7 dBi in the supported frequency bands.
- Articulating joint that can maneuver into three stop positions: 0°, 45°, and 90°.
- Male SubMiniature A connector that allows direct mounting of the antenna to any Cisco supported router or Pluggable Module with an SMA connector.
- The SMA connector design has added rotational frictional torque to ensure the SMA interface stays properly mated, and to reduce chances of a disconnect. The design is also more finger friendly compared to a classic SMA hex nut design.

For optimal performance, we strongly recommend that you use two antennas to take full advantage of MIMO technology on all Cisco cellular routers that support MIMO (4G LTE and later releases).

Figure 419: Cisco LTE-ANTM-SMA-D Omnidirectional Dipole Antenna, SMA Connector and Articulating Joint:

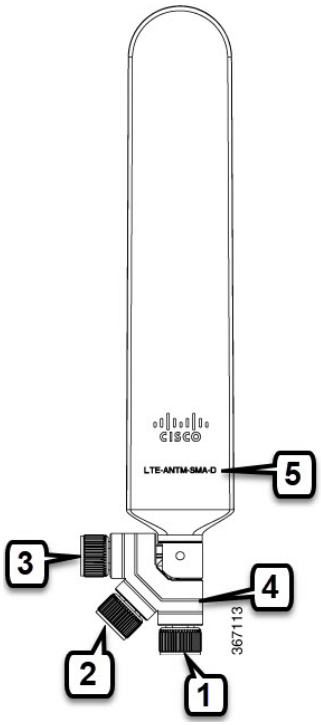

See the following table:

1	SMA connector 0° position
2	SMA connector 45° position
3	SMA connector 90° position
4	Articulating Joint
5	Product ID

Specifications

Table 82: Specifications of the LTE-ANTM-SMA-D antenna:

Operating Frequencies	698-960 MHz 1447-1511 MHz 1710-2690 MHz
Polarization	Vertical, linear
Nominal Impedance	50 Ohms

Peak Gain	2.0 dBi (698-960 MHz) 2.8 dBi (1447-1511 MHz) 3.7 dBi (1710-2690 MHz) **Note** The standalone antenna peak gain numbers are provided above. When you install an antenna close to metallic objects or directly on chassis, the peak gain will be affected. We recommend that you keep antennas away from very large chassis and metallic objects. You can install antennas directly on smaller or medium size chassis. In all cases, we recommend that you keep different antennas away from each other and from various known sources of electromagnetic radiation.
VSWR	≤ 2.5:1 (698-960 MHz) ≤ 2.5:1 (1447-1511 MHz) ≤ 2.0:1 (1710-2690 MHz)
Maximum RF Input Power	5 W
DC Power	No DC power required for LTE-ANTM-SMA-D antenna operation.
Dimensions	9” (L) x 1.46” (W) x 0.43” (D) (229 x 37 x 11 mm)
Weight	56.8 grams
Efficiency	LTE-ANTM-SMA-D antennas have high standalone efficiency, and maintain high efficiency when directly installed on front plate of a small or medium size Cisco router. However, depending on chassis size and a variety of other electromagnetic considerations, installing the antenna directly on the chassis is not always recommended.
Temperature Range	-30°C to + 70°C (Operating) -40°C to + 85°C (Storage)

Antenna Radiation Patterns

Figure 420: 698, 824, 960 MHz Cellular Antenna Radiation Pattern (dBi), Azimuth

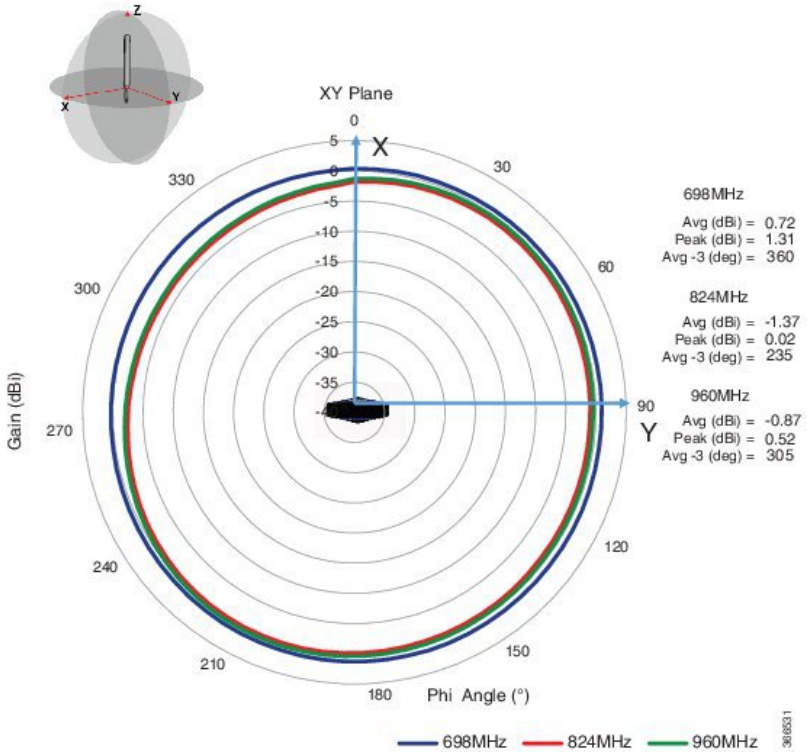

Figure 421: 698, 824, 960 MHz Cellular Antenna Radiation Pattern (dBi), Elevation, Phi = 0

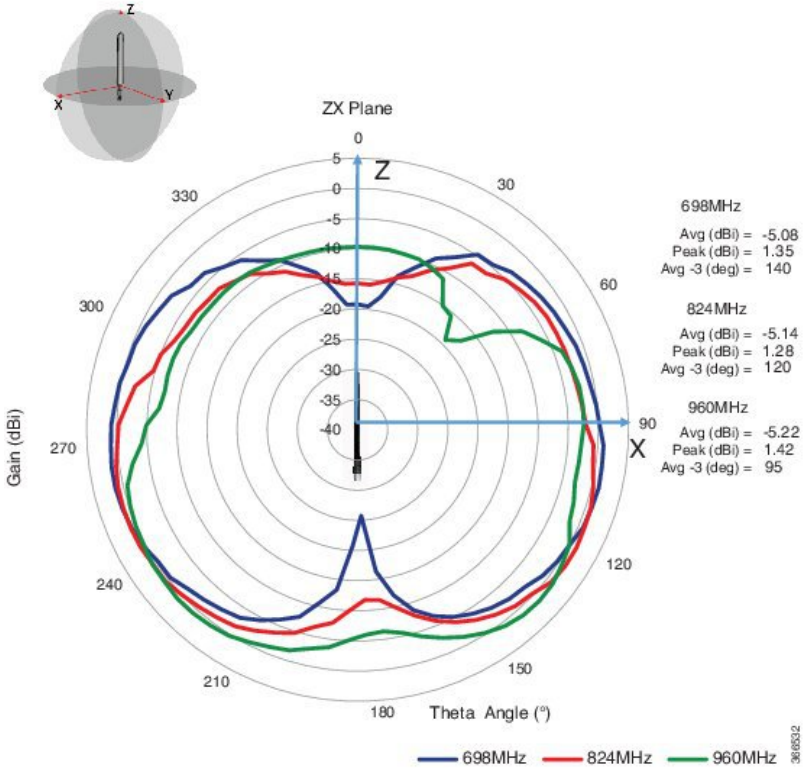

Figure 422: 698, 824, 960 MHz Cellular Antenna Radiation Pattern (dBi), Elevation, Phi = 90

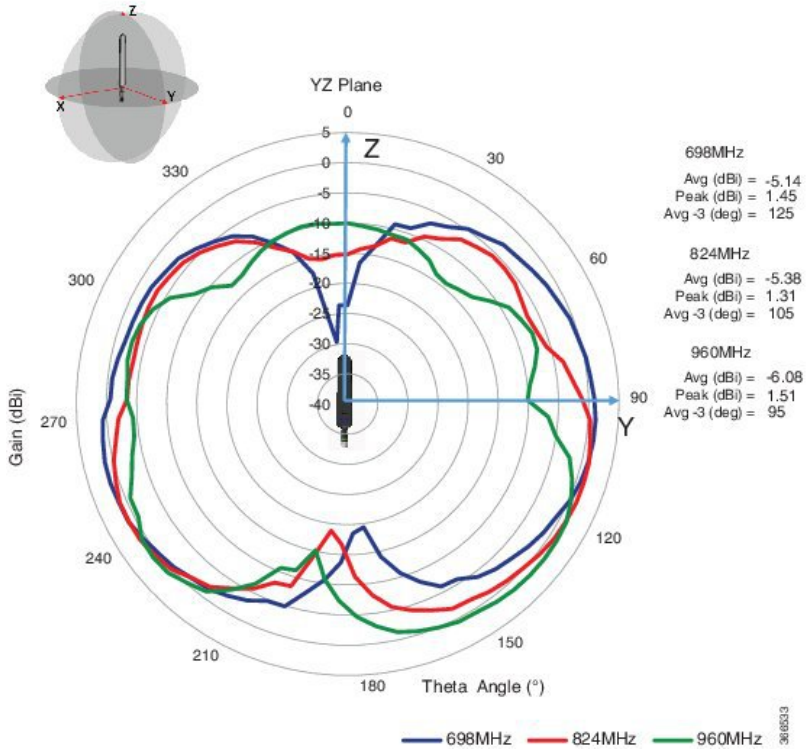

Figure 423: 1710, 2170, 2690 MHz Antenna Radiation Pattern (dBi), Azimuth

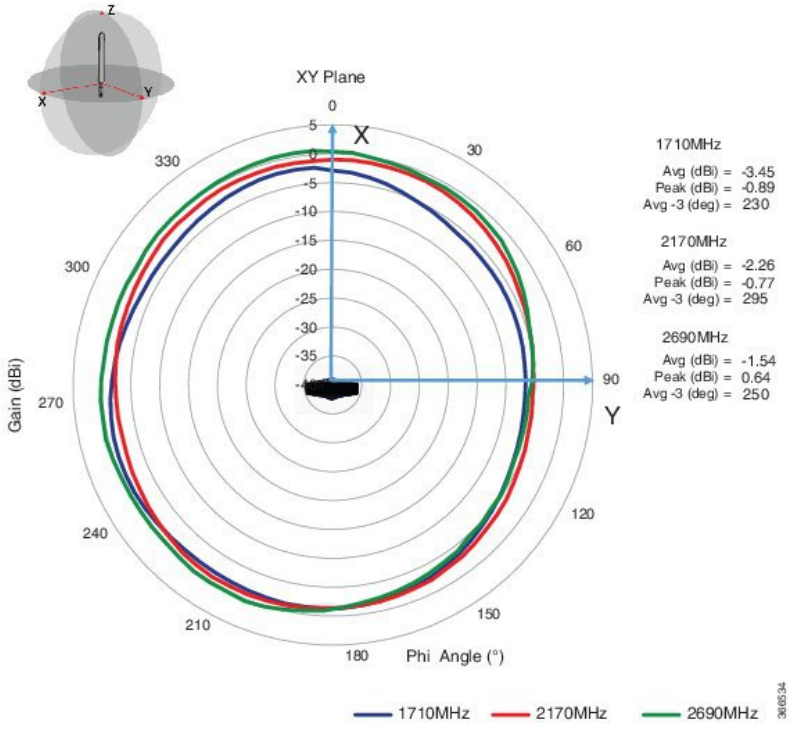

Figure 424: 1710, 2170, 2690 MHz Antenna Radiation Pattern (dBi), Elevation, Phi = 0

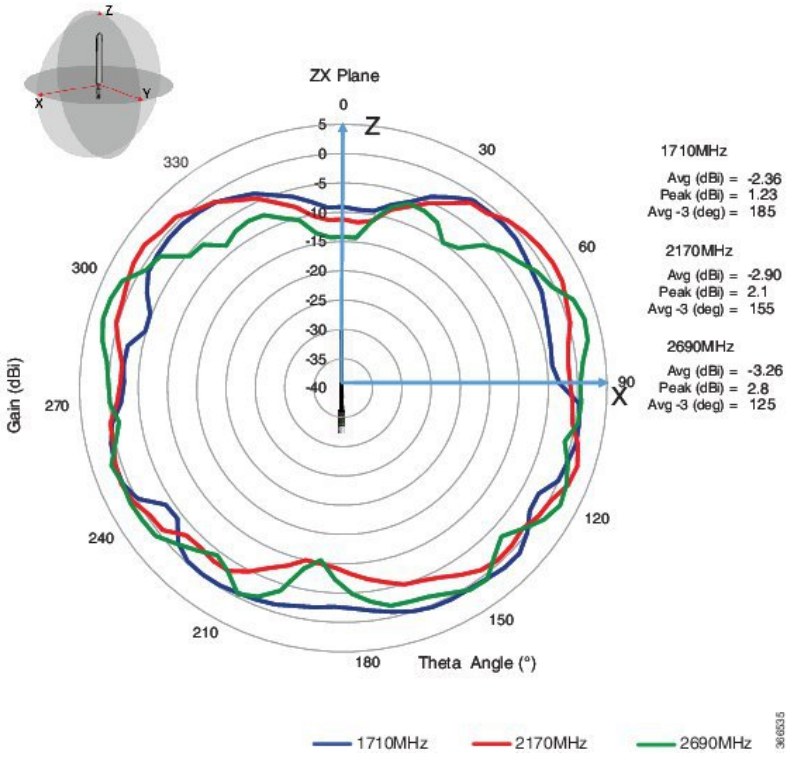

Figure 425: 1710, 2170, 2690 MHz Antenna Radiation Pattern (dBi), Elevation, Phi = 90

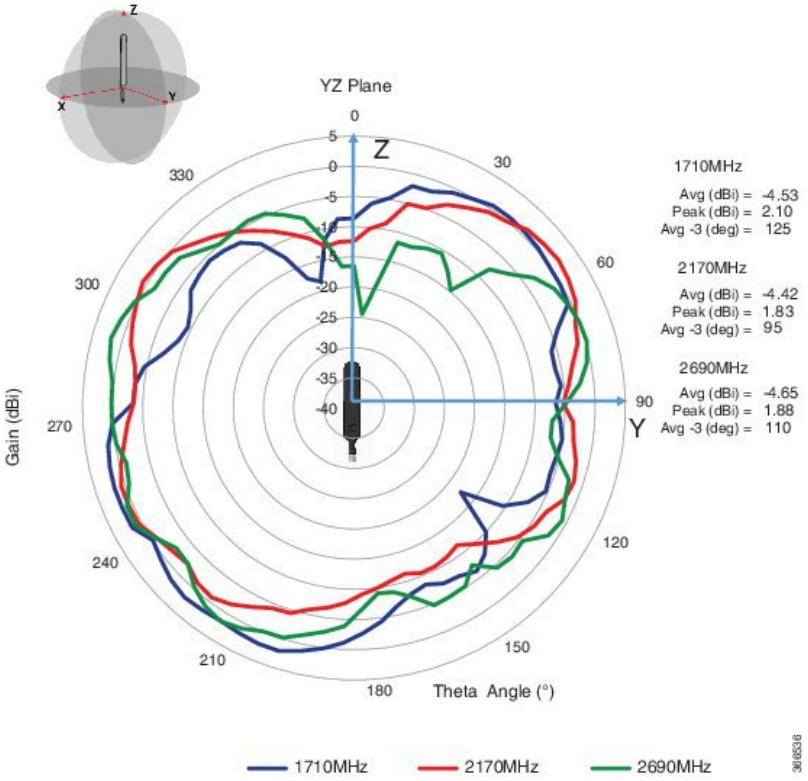

General Safety Precautions

Warning This warning symbol means danger. You are in a situation that could cause bodily injury. Before you work on any equipment, be aware of the hazards involved with electrical circuitry and be familiar with standard practices for preventing accidents. Use the statement number provided at the end of each warning to locate its translation in the translated safety warnings that accompanied this device. **Statement 1071**

Warning Do not work on the system or connect or disconnect cables during periods of lightning activity. **Statement 1001**

Warning Do not locate the outdoor antenna near overhead power lines or other electric light or power circuits, or where it can come into contact with such circuits. When installing the antenna, take extreme care not to come into contact with such circuits, as they may cause serious injury or death. For proper installation and grounding of the antenna, please refer to national and local codes (for example, U.S.:NFPA 70, National Electrical Code, Article 810, Canada:Canadian Electrical Code, Section 54). **Statement 1052**

Warning In order to comply with FCC radio frequency (RF) exposure limits, antennas should be located at a minimum of 7.9 inches (20 cm) or more from the body of all persons. **Statement 332**

Note For your safety, and to help you achieve a good installation, please read and follow these safety precautions.

Mast Mounted or Building Mounted Installations

The following instructions are common to most mast mounted or building mounted installations. For specific installation instructions for each antenna, see the antenna data-sheet and the router hardware installation guide.

- Find someone to help you—installing an antenna is often a two-person job.
- Select your installation site with safety, as well as performance, in mind. Remember that electric power lines and phone lines look alike. For your safety, assume that any overhead line can kill you.
- Contact your electric power company. Tell them your plans and ask them to come look at your proposed installation.
- Do not use a metal ladder.
- Do not work on a wet or windy day.
- Do dress properly—wear shoes with rubber soles and heels, rubber gloves, and a long-sleeved shirt or jacket.
- If the assembly starts to drop, move away from it and let it fall. Because the antenna, mast, cable, and metal guy wires are all excellent conductors of electrical current, even the slightest touch of any of these parts to a power line completes an electrical path through the antenna and the installer.
- If any part of the antenna system should come in contact with a power line, do not touch it or try to remove it yourself. Call your local power company to have it removed safely.
- If an accident should occur with the power lines, call for qualified emergency help immediately.
- Assemble your new antenna on the ground or a level surface at the installation site.
- Connect its coaxial cable while you are on the ground and attach the antenna to the mast.
- Ensure that the mast does not fall as you raise or remove it. Use a durable non-conductive rope secured at each two foot level as the mast is raised. Have an assistant tend the rope, ready to pull the mast clear of any hazards (such as power lines) should it begin to fall.
- Use the mounting bracket provided with the antenna.
- If the installation will use guy wires:
    - Install guy anchor bolts.
    - Estimate the length of guy wire and cut it before raising the mast.
    - Attach guy wires to a mast using guy rings.
    - In the case of a guyed (tall, thin mast) installation, you must have at least one assistant to hold the mast upright while the guy wires are attached and tightened to the anchor bolts.

- Attach a “DANGER” label at eye level on the mast.
- Install ground rods to remove any static electricity buildup and connect a ground wire to the mast and ground rod. Use ground rods designed for that purpose, not a spare piece of pipe.

Unused Antenna Ports

Port plugs must be installed in any unused antenna ports.

The weatherproof caps on the connectors protect the router interior from environmental elements including water, heat, cold, and dust. They are installed on unused ports before the router is shipped.

When you install a new antenna in a port with an N-connector:

- Chassis-mounted antennas—Remove the weather proof cap before installing a chassis-mounted antenna.
- External antennas—Remove weatherproof cap, then connect the supported Cisco cable to the connector.

Guidelines to Achieving Optimal RF and Antenna Performance

Antennas are a critical component of a wireless communication system. Selecting a suitable antenna, an optimal antenna location, or antenna site is essential for optimum performance of a wireless links.

This section covers general tips for optimizing RF performance of indoor and outdoor terrestrial radio systems in the 400-7125 MHz frequency range. Examples of terrestrial radio systems include 4G LTE, 5G NR, Wi-Fi, LoRa, LR-WPAN and similar. In this context GPS SPS would not be considered a terrestrial system as the signal is received from space, not from another terrestrial site.

Because the antenna transmits and receives radio signals over the air, overall RF performance of the link is susceptible to RF obstructions and common sources of RF interference that can reduce throughput and range of the system.

Follow these guidelines to optimize performance. When in doubt, consult a qualified RF professional, and check with your solution partner for specific recommendations.

Antenna Model Selection and Performance

Consider the following when planning your installation:

- When selecting the antenna, ensure that it covers the frequency ranges or frequency bands of interest, and that it has good RF parameters such as antenna efficiency, VSWR and suitable radiation pattern for every frequency range that your application will use with this antenna.
- Antenna pattern is important. Omni-directional antennas have lower gain, but allow communicating to devices in all azimuth directions. Directional antennas concentrate the beam in a specific direction, making them ideal for point to point communication.
- When a system has multiple RF ports for receive and / or transmit, as is the case for 4G LTE , 5G NR or Wi-Fi, it is highly recommended to populate all the RF ports with suitable antennas to take advantage of MIMO, rather than rely on a single port or single antenna to save on cost. Please see the MIMO section for a detailed description of MIMO benefits.
- For RF systems that support multiple RF ports and multiple RF standards such as LTE, Wi-Fi, and GPS: consider using a multi-element antenna that integrates multiple antennas under the same radome (cover).

Doing so may reduce cost compared to deploying and mounting a discrete single port antenna for every RF port.

- For communication between fixed infrastructure devices, such as mesh nodes or a point-to-point backhaul link, each device should have an antenna with the same polarization. If communicating with mobile devices that might be randomly oriented, consider dual-polarized antennas, such as those with both vertical and horizontal or slant +45° and -45° polarized elements.

Antenna Environmental Specifications

The selected antenna must have suitable mechanical and environmental specifications for the environment where it will be deployed. For example, shock and vibration specifications for transportation, corrosion resistant construction for marine and oil and gas industries, or IP (ingress protection) rating for outdoor deployment. Indoor antennas are typically not suitable for harsh industrial environments. Please check with your system integrator for environmental requirements for your application.

Antenna Accessories and Mounting

Consider the following when planning your installation:

- Carefully consider what type of other RF accessories, besides antenna, such as RF cables, lightning arrestors or RF adapters may be required in your installations. It is best to minimize long RF cable runs due to RF signal losses in the cable. Thinner RF cables have more RF loss , thicker cables are less flexible and more expensive.
- Carefully consider how the antenna will be physically mounted, as this may affect antenna selection. For example, a stud mount mechanical mounting design is a better fit for mounting on top of an electrical cabinet than a mast mount antenna.
- For outdoor deployments, follow installation instructions for the antenna. It is good practice to keep protective covers on the radio's RF ports and any antenna or accessory RF ports until the moment the interfaces are mated. This reduces chances of contamination, trapping water or condensation inside the connector, or accidental damage to RF interfaces.

MIMO Performance and Arrays

MIMO systems deliver benefits of higher SNR, higher reliability and higher throughput compared to single antenna systems. In more technical terms, MIMO delivers array gain, diversity gain and multiplexing gain compared to single antenna.

- Array gain — Improvement in SNR (signal to noise ratio) by coherently combining signals from multiple antennas. For example, increasing SNR through beamforming techniques.
- Diversity gain — Improvement in reliability by mitigating deep fading or strong destructive EM wave interference. For example, in a two-antenna system, if one antenna is experiencing deep fading due to an EM destructive null at its location at a given instant, the other antenna is unlikely to have a null at the same instant, and the combined SNR stays at a reliable level. In contrast, a single antenna would see SNR oscillating between good SNR and very poor SNR and reliability would degrade.
- Multiplexing gain — Increase in system capacity or throughput by sending independent data over multiple spatial streams simultaneously. The number of streams cannot be more than the number of antennas. For example, to support three spatial streams, a minimum of three antennas is required. Often there may be additional antennas for diversity or redundancy, such as in the case of 4x4:3, or 4x4 MIMO with 3 spatial streams.

If deploying multiple single-element antennas for a MIMO system in an array, ensure sufficient spacing between the antennas. Omnidirectional elements should generally be at least one wavelength apart at the lowest operating frequency.

Consider the following:

- For Wi-Fi systems operating in the 2.4, 5, and/or 6 GHz bands, space elements at least 5 inches (12.5 cm) apart.
- For 4G LTE and 5G systems with the lowest operating frequency of 617 MHz , space elements at least 20 inches (50 cm) apart.
- Note that spacing between elements inside multi-element MIMO antennas is often less than one wavelength. However multi-element antennas are engineered with MIMO performance in mind, by providing antenna diversity through pattern, polarization, and isolation between MIMO elements.

Antenna siting and location

Consider the following when planning your installation:

- Plan antenna location ahead of time. Ideal location for an antenna is in LOS (line of sight) of the counterpart that it is trying to communicate with. Under LOS conditions the signals propagate directly between the two communication nodes, without relying on signal bouncing off a wall or other structure to reach the counterpart. This is sometimes not possible to achieve in practice, but it is a useful goal to keep in mind when optimizing antenna location.
- While it is good to keep RF cables short, it is most desirable for an antenna to be in the best location it can be to provide the desired coverage.
- For large deployments involving multiple units communicating with each other across a complex urban or industrial landscape, consider running an RF propagation modeling study to predict approximate simulated coverage maps and determine initial placement of the units. A propagation study may help reduce overall deployment cost by discovering and mitigating issues with RF coverage before the infrastructure is physically installed.
- Keep the antenna away from metal obstructions such as heating and air-conditioning ducts, large ceiling trusses, building superstructures, and major power cabling runs. One exception is if the antenna is designed to be mounted on a ground plane. If mounting on a ground plane, mount the antenna on a flat metal surface away from adjacent obstructions.
- It is strongly recommended not to install antennas directly on the router or access point (AP), unless the router or AP is specifically engineered to directly mount the antennas. Products that are engineered for direct mounting of antennas specifically address each of the below issues.
- Reasons to mount antennas away from the router include:
    - Router location may not be optimal location for antenna to communicate with the counterpart wirelessly, so router and antenna may need to be in different locations.
    - Router may have a clutter of Ethernet cable and power cables around it, which will obstruct antenna signal.
    - A number of routers, such as the IR1835, are modular. They have plug-in RF modules for Wi-Fi , 4G LTE or 5G NR such as WP-WIFI6, P-LTEAP18-GL, P-5GS6-GL. These modules have RF connectors spaced close together, and while it is mechanically possible to install four or five antennas directly attached, this will result in significant degradation to RF performance of antennas due to

mutual de-tuning between closely spaced antennas. It is strongly recommended to install antennas away from the chassis in modular cases.

- If installing an antenna indoors, consider that the density and electromagnetic properties of the materials used in the building construction determines the number of walls the signal can pass through and still maintain adequate coverage.
  - Paper and vinyl walls have very little effect on signal penetration.
  - Solid and pre-cast concrete walls limit signal penetration to one or two walls without degrading coverage.
  - Concrete and wood block walls limit signal penetration to three or four walls.
  - A signal can penetrate five or six walls constructed of drywall or wood.
  - A thick metal wall causes signals to reflect off, causing poor penetration.
  - A chain link fence or wire mesh spaced between 1 and 1 1/2 in. (2.5 and 3.8 cm) acts as a harmonic reflector that blocks a 2.4-GHz radio signal.
  - Install the antenna away from microwave ovens and 2-GHz cordless phones. These products can cause signal interference because they operate in the same frequency range as the device your antenna is connected to.

Installation Instructions

The following section contains information for installing the LTE-ANTM-SMA-D antenna:

This antenna is designed to be mounted either directly or on an antenna extension stand to any Cisco 3G/4G wireless ISR, LTE and LTEA router with an SMA(f) connector by threading it onto the mating connector. Refer to the routers technical documentation for recommendations of direct mounting of antenna to the router versus installing the antenna on an antenna extension stand. Mount and deploy the antenna at the 0° position, 45° position, or the 90° position, and then change that position at will. The rotation of the antenna into the proper position can take place while the antenna is still loose on the mating connector. No software is required for this installation.

In addition to the antenna orientation, the installation location of 4G routers and cellular modules play a significant role in determining overall network performance. Routers located at the farthest coverage points might have 10 to 50 percent of the bandwidth available compared to routers located closer to the cellular base station tower.

Because antennas transmit and receive radio signals, their performance can be adversely affected by the surrounding environment, including physical obstructions. Radio frequency (RF) interference may occur between wireless systems located close to each other, especially if the antennas of these systems are located close to each other.

Follow these guidelines to ensure the best possible performance:

- When you use the antenna on a modular router with an LTE pluggable module, always mount the antenna on an appropriate extension cable and antenna stand. The antenna performance, and therefore that of the router, will not be optimal if mounted directly to the pluggable module.
- Mounting of the antenna directly to smaller physical size routers is allowed.

- For optimal performance, space multiple antennas apart by at least 17 inches (43 cm).
- The lowest LTE frequency of 700 MHz 17 inches represents 1 wavelength. Spacing of 0.5 wavelength or 8.5 inch (22.5cm) results in good performance.
- Spacing of less than 8.5 inch may result in significantly reduced MIMO performance.
- Spacing antennas close to each other (e.g. 3") results in antennas detuning from their original designed performance due to antenna coupling.
- Wherever possible, mount the ISR cellular router or the pluggable LTE module and antenna where the cellular base station or tower are within sight and without physical obstructions. Barriers along the line of sight between the device and the local base station will degrade the wireless radio signals. Install ISR cellular routers, pluggable modules and antennas above floor level in office environments or near the ceiling for better performance because most obstructions tend to be near the floor level.

Related Documentation

- For information about antennas and modules, see: http://www.cisco.com/go/cg-modules
- For information about omnidirectional and directional antennas, see: http://www.cisco.com/en/US/tech/tk722/tk809/technologies_tech_note09186a00807f34d3.shtml

Communications, Services, and Additional Information

- To receive timely, relevant information from Cisco, sign up at Cisco Profile Manager.
- To get the business impact you're looking for with the technologies that matter, visit Cisco Services.
- To submit a service request, visit Cisco Support.
- To discover and browse secure, validated enterprise-class apps, products, solutions, and services, visit Cisco DevNet.
- To obtain general networking, training, and certification titles, visit Cisco Press.
- To find warranty information for a specific product or product family, access Cisco Warranty Finder.

Cisco Bug Search Tool

Cisco Bug Search Tool (BST) is a web-based tool that acts as a gateway to the Cisco bug tracking system that maintains a comprehensive list of defects and vulnerabilities in Cisco products and software. BST provides you with detailed defect information about your products and software.

Documentation Feedback

To provide feedback about Cisco technical documentation, use the feedback form available in the right pane of every online document.

Cisco Support Community

Cisco Support Community is a forum for you to ask and answer questions, share suggestions, and collaborate with your peers. Join the forum at https://supportforums.cisco.com/index.jspa.

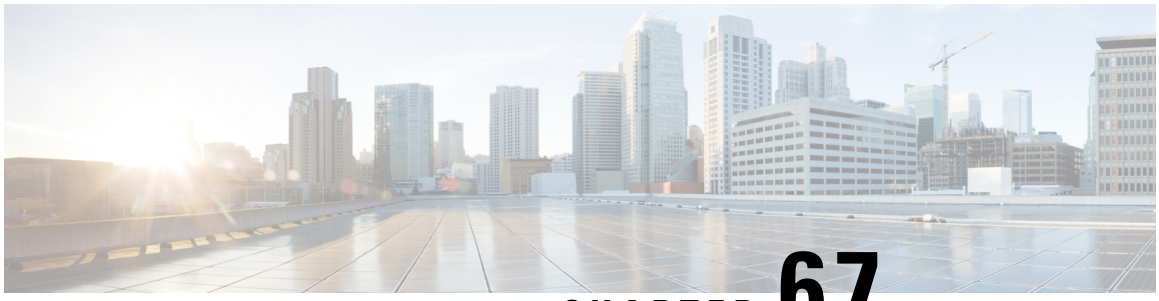

CHAPTER 67

Cisco 4G LTEA, 4G LTE, and 3G Omnidirectional Dipole Antenna (LTE-ANTM2-SMA-D)

This section contains the following:

- Overview, on page 997
- Specifications, on page 998
- Antenna Radiation Patterns, on page 1001
- General Safety Precautions, on page 1012
- Guidelines to Achieving Optimal RF and Antenna Performance, on page 1013
- Installation Instructions, on page 1017
- Related Documentation , on page 1017
- Communications, Services, and Additional Information, on page 1017

Overview

This document provides the description, supported features, and installation instructions for the Cisco 3G/4G LTE and LTEA Omnidirectional Dipole Antenna (LTE-ANTM2-SMA-D).

⚠

Caution Read the information in Safety Instructions before installing or replacing antennas.

The LTE-ANTM2-SMA-D omnidirectional dipole antenna is designed for indoor use with Cisco 4G Long Term Evolution (LTE) and Long Term Evolution Advanced (LTEA) Service Routers (ISRs) and Pluggable Modules with an SMA connector.

The LTE-ANTM2-SMA-D antenna is marked with a dual green band to indicate that it supports Cisco LTEA routers and modules.

This antenna has the following features:

- Support for frequencies of 617-960, 1400-1700, 1710-2690, 3400-3900, and 5150-6000 MHz.
- Articulating joint that can maneuver into three stop positions: 0°, 45°, and 90°.
- Male SubMiniature A connector that allows direct mounting of the antenna to any Cisco supported router or Pluggable Module with an SMA connector.

- The SMA connector design has added rotational frictional torque to ensure the SMA interface stays properly mated, and to reduce chances of a disconnect. The design is also more finger friendly compared to a classic SMA hex nut design.

For optimal performance, we strongly recommend that you use two antennas to take full advantage of MIMO technology on all Cisco cellular routers that support MIMO (4G LTE and later releases).

Figure 426: Cisco LTE-ANTM2-SMA-D Omnidirectional Dipole Antenna



Specifications

Table 83: Specifications of the LTE-ANTM2-SMA-D antenna

Operating Frequencies	• 617-960 MHz • 1400-1700 MHz • 1710-2690 MHz • 3400-3900 MHz • 5150-6000 MHz
Polarization	Vertical
Nominal Impedance	50 Ohms

Peak Gain	• 617-960 MHz - 0 dBi • 1400-2690 MHz -2 dBi • 3400-3900 MHz- 5 dBi • 2500-2690 MHz- 5 dBi Note The standalone antenna peak gain numbers are provided above. When you install an antenna close to metallic objects or directly on chassis, the peak gain will be affected. We recommend that you keep antennas away from very large chassis and metallic objects. You can install antennas directly on smaller or medium size chassis. In all cases, we recommend that you keep different antennas away from each other and from various known sources of electromagnetic radiation.
VSWR	• 4.5:1@698-960 MHz • 4:1@1400-2690 MHz • 4:1@3400-3900 MHz • 4:1@5150-6000 MHz
Power withstanding	3 W
DC Power	No DC power required for LTE-ANTM2-SMA-D antenna operation.
Dimensions	9” (L) x 1.46” (W) x 0.43” (D) (229 x 37 x 11 mm)
Weight	50 grams
Efficiency	LTE-ANTM2-SMA-D antennas have high standalone efficiency, and maintain high efficiency when directly installed on front plate of a small or medium size Cisco router. However, depending on chassis size and a variety of other electromagnetic considerations, installing the antenna directly on the chassis is not always recommended.
Temperature Range	-30°C to + 85°C (Operating) -40°C to + 85°C (Storage)

Figure 427: Mechanical Drawing

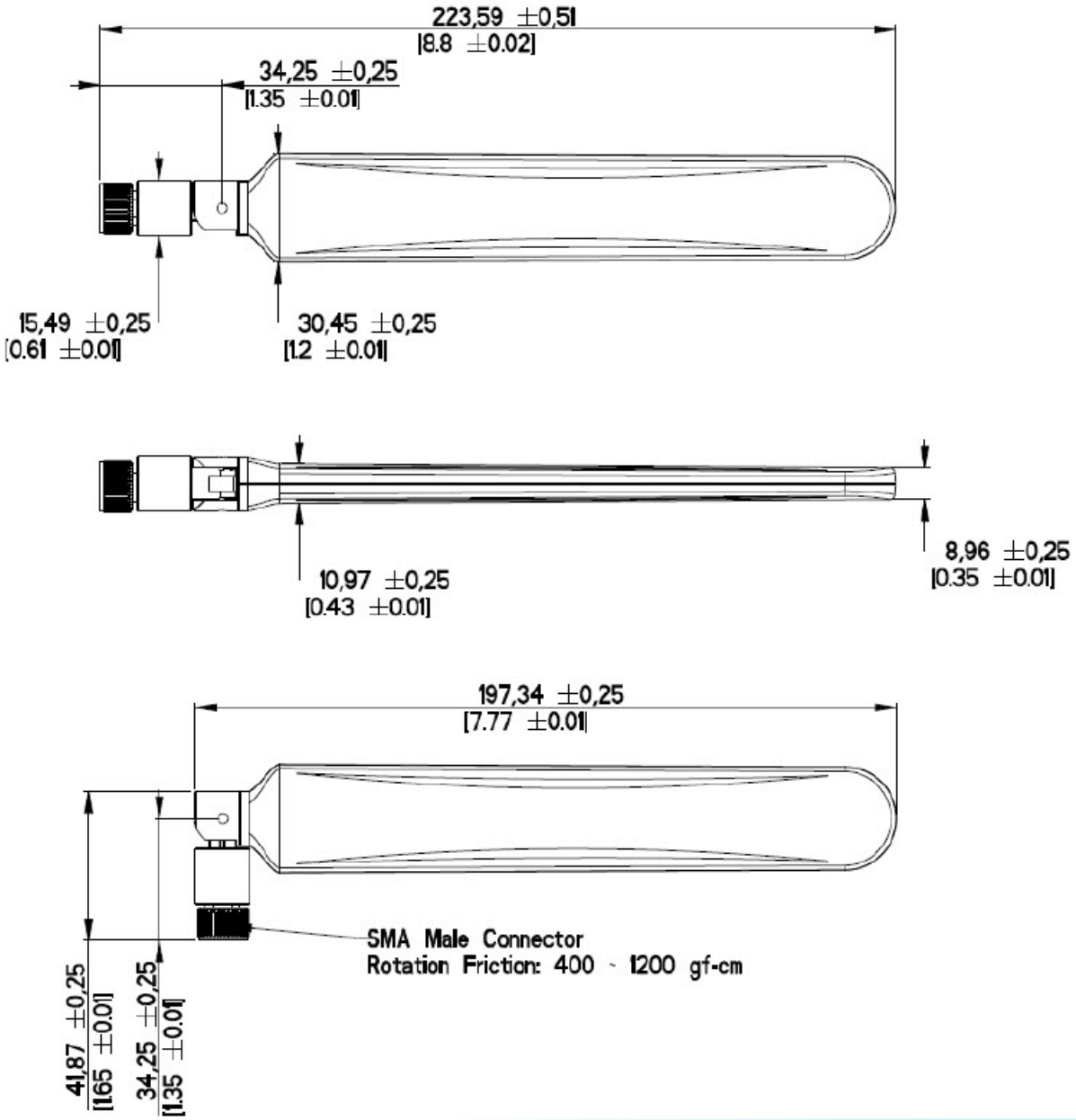

Antenna Radiation Patterns

Figure 428: VSWR Vs Frequency

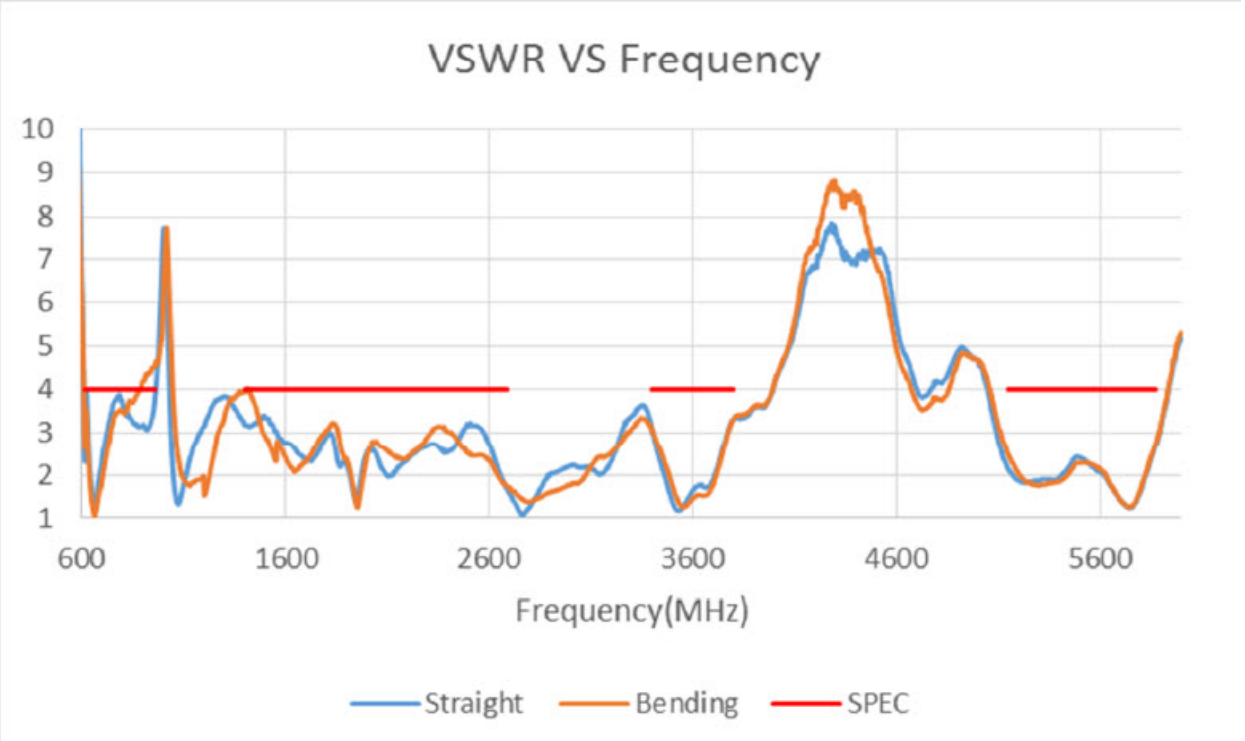

Figure 429: Efficiency Vs Frequency

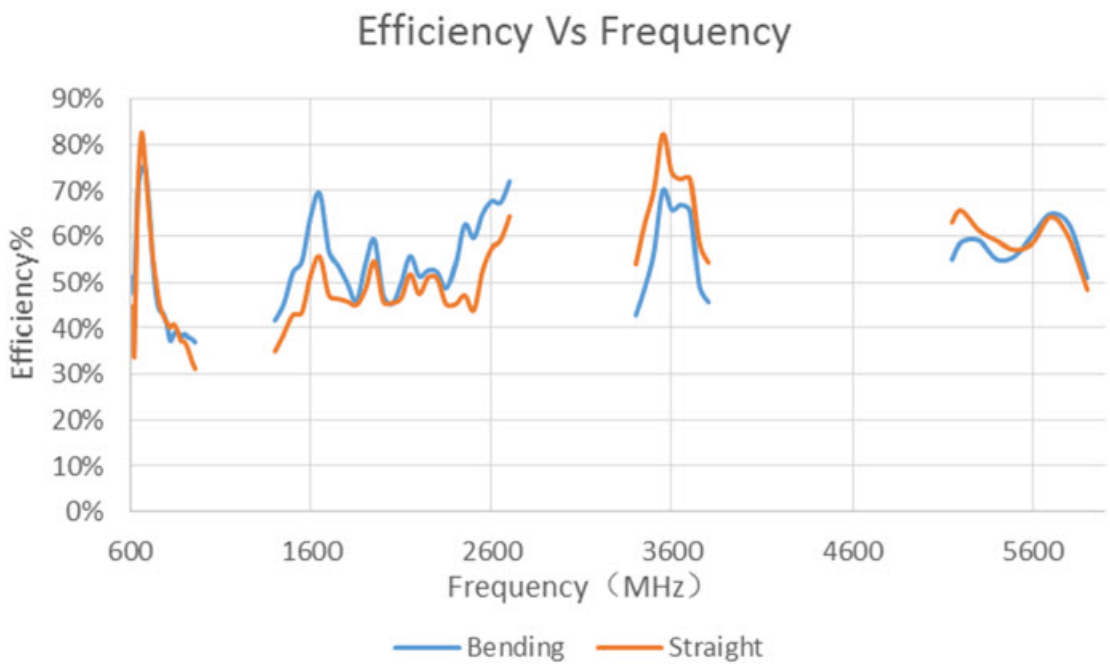

Figure 430: Gain Vs Frequency

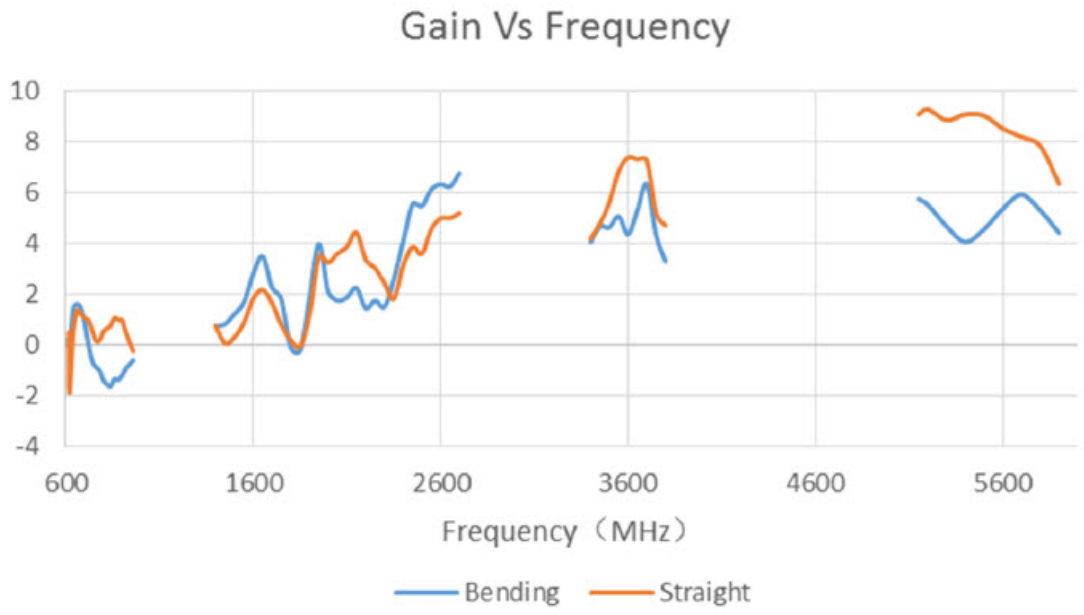

Figure 431: Efficiency Vs Frequency

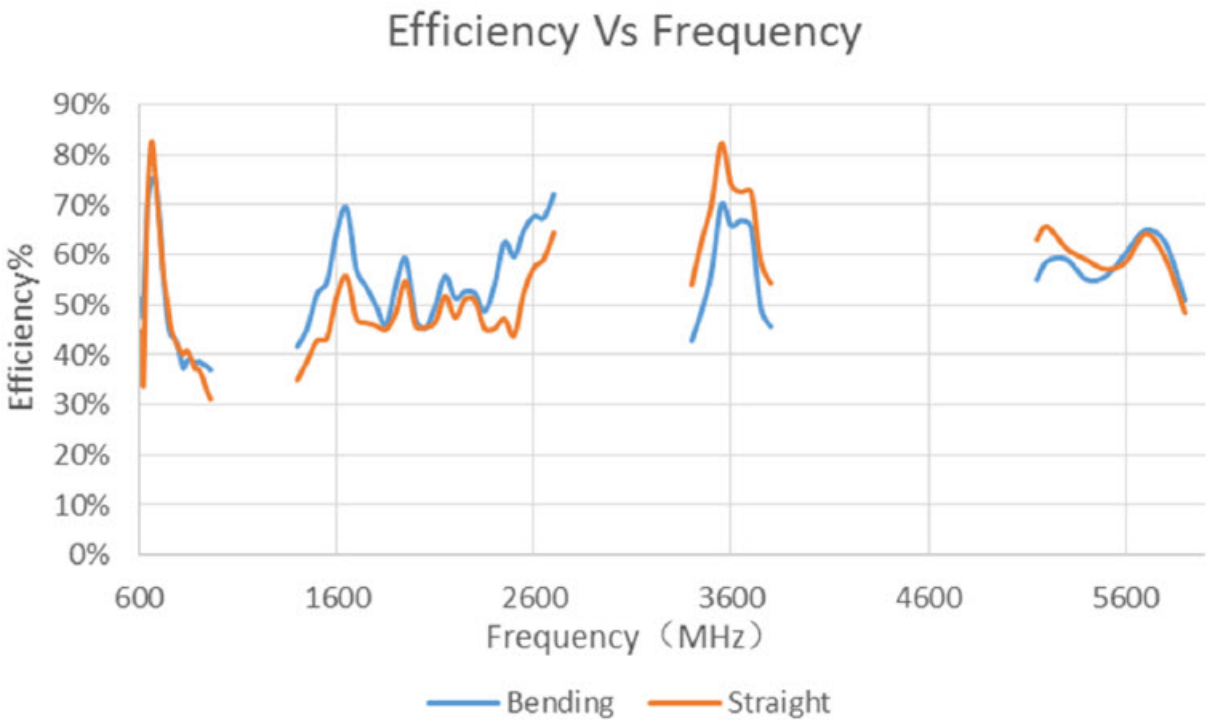

Gain Plots 617-900 MHz

Figure 432: XY Plane

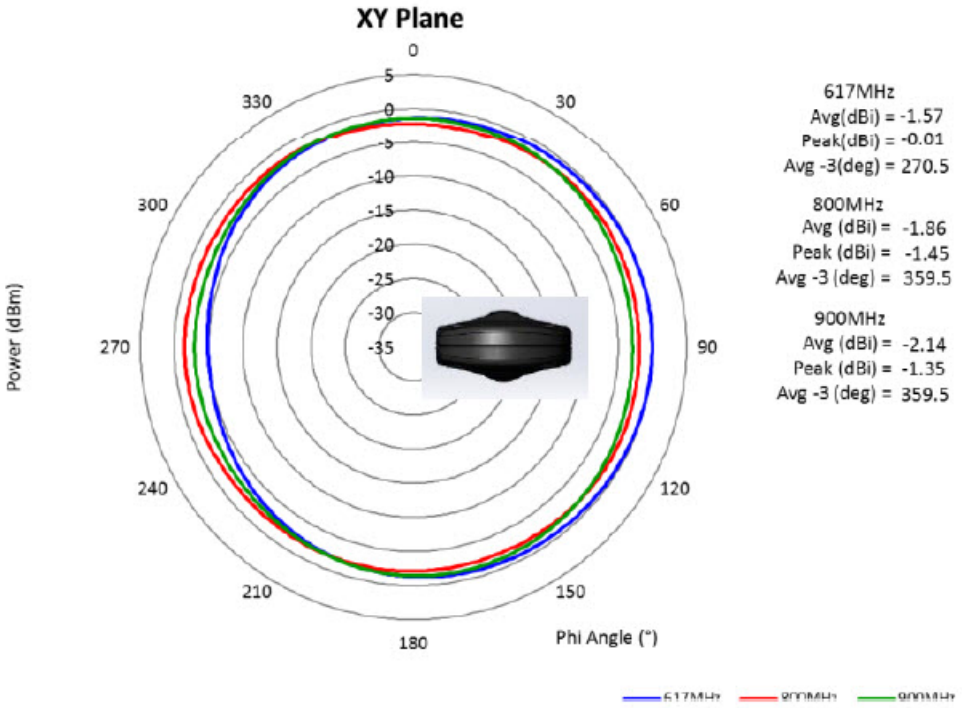

Figure 433: ZX Plane

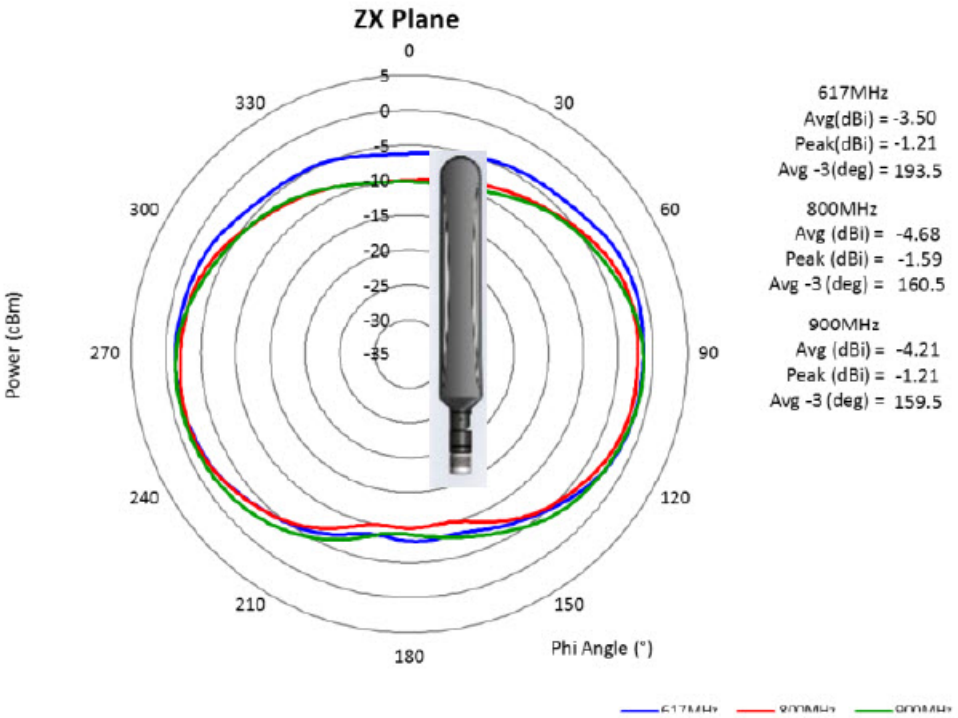

Figure 434: YZ Plane

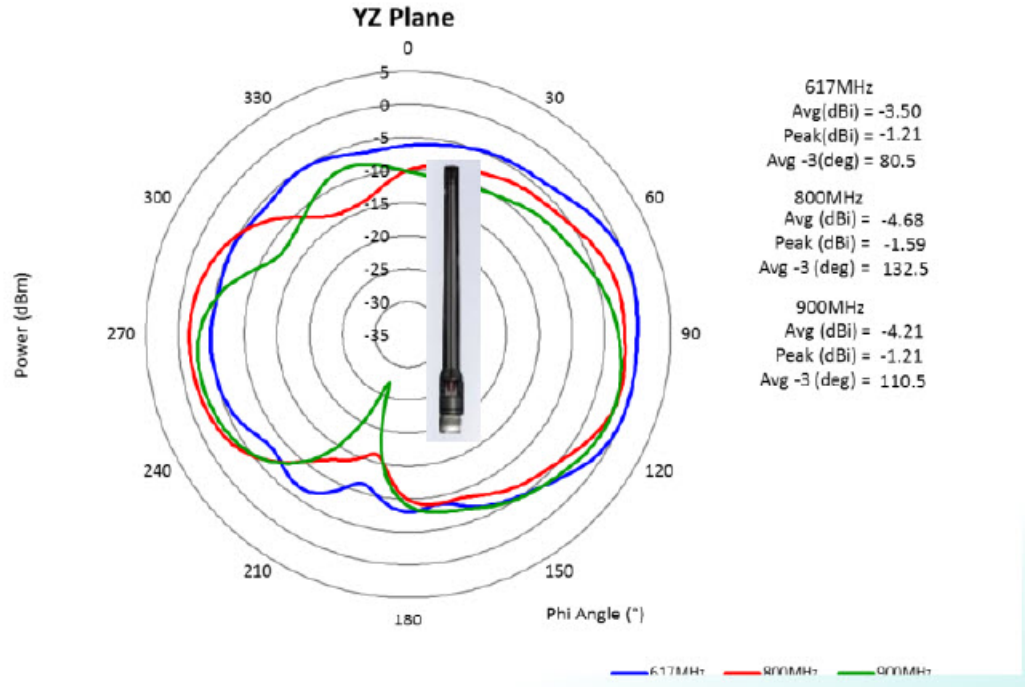

Gain Plots 1400-2700 MHz

Figure 435: XY Plane

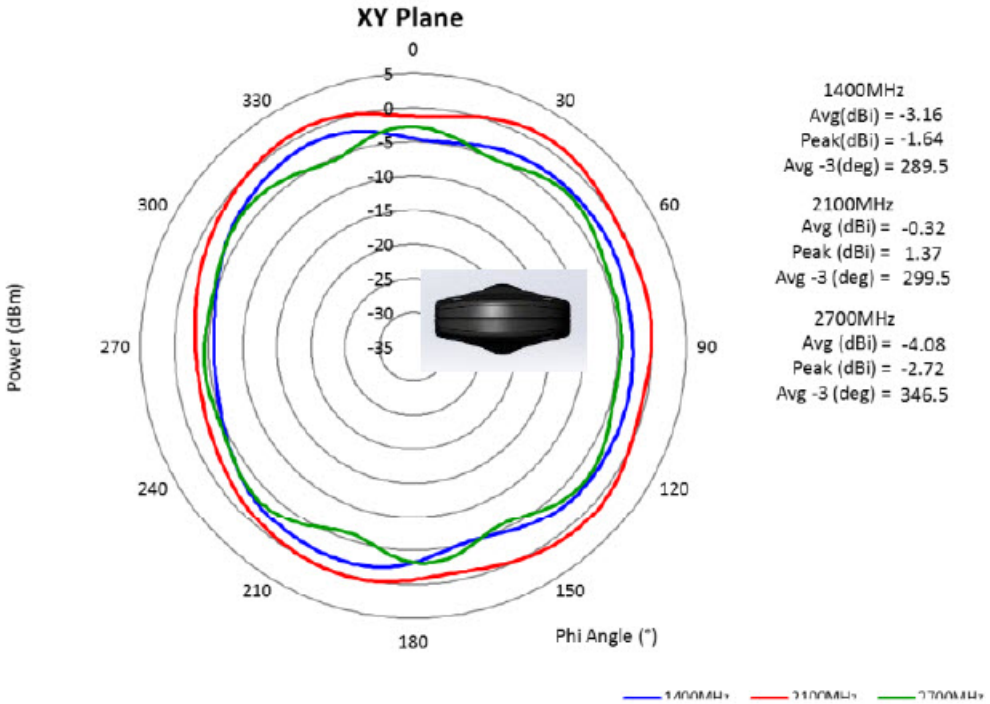

Figure 436: ZX Plane

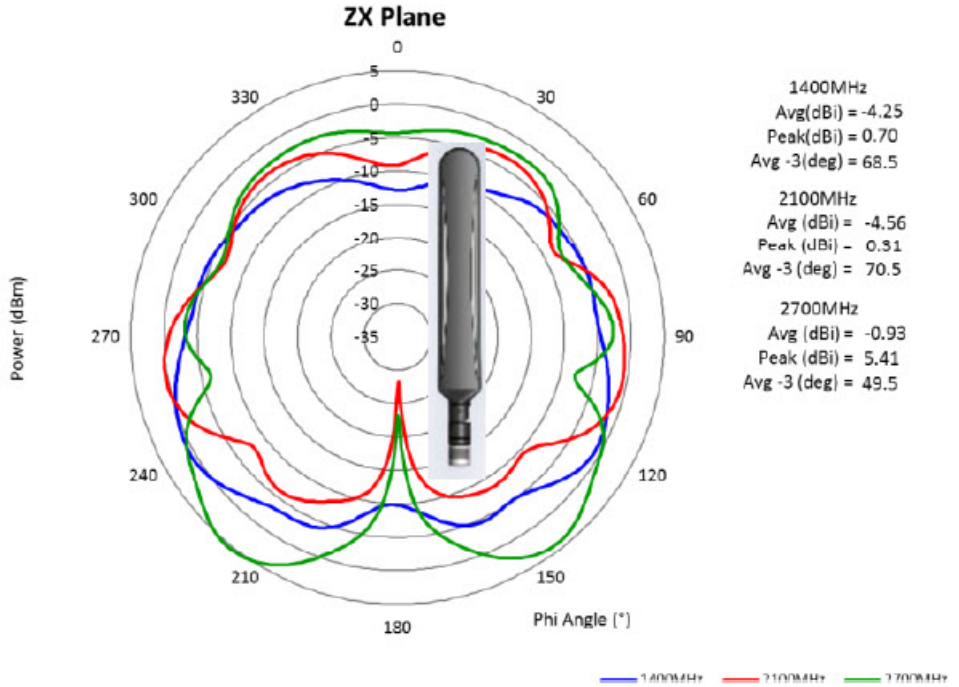

Figure 437: YZ Plane

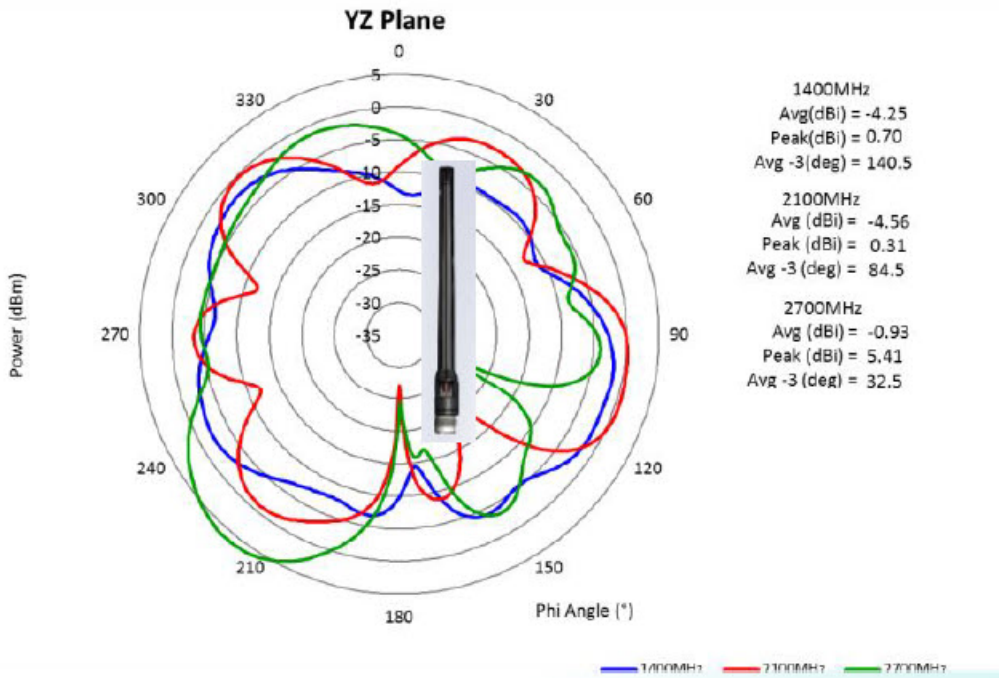

Gain Plots 3400-3900 MHz

Figure 438: XY Plane

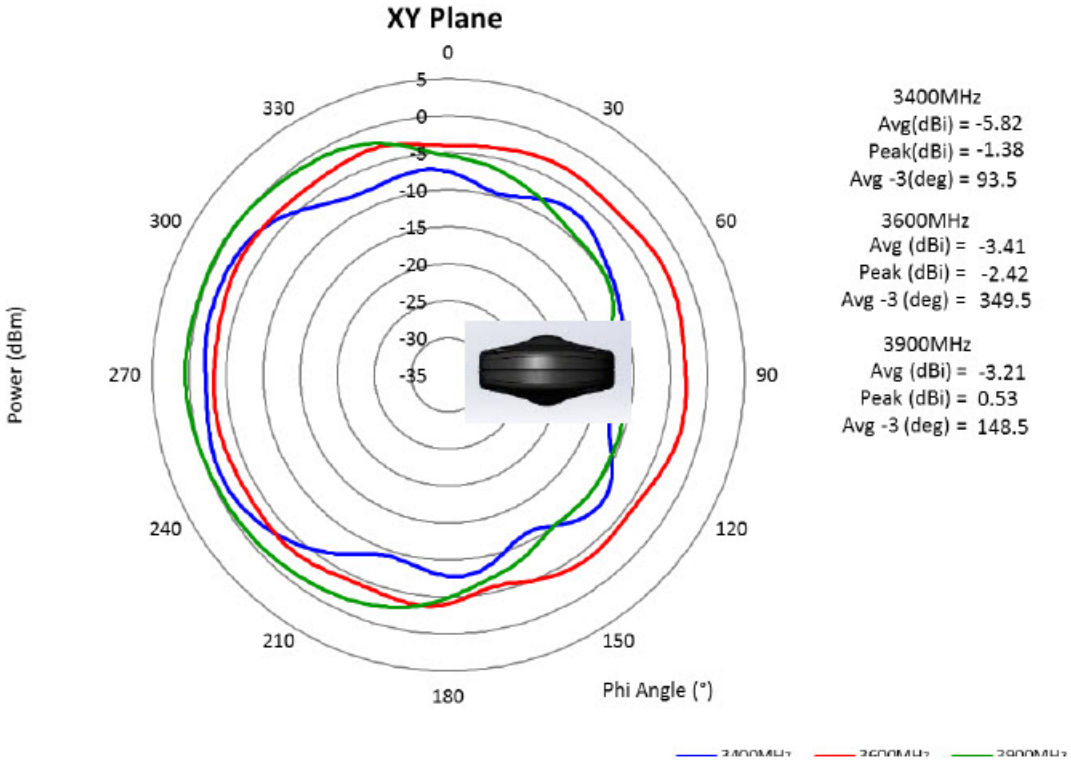

Figure 439: ZX Plane

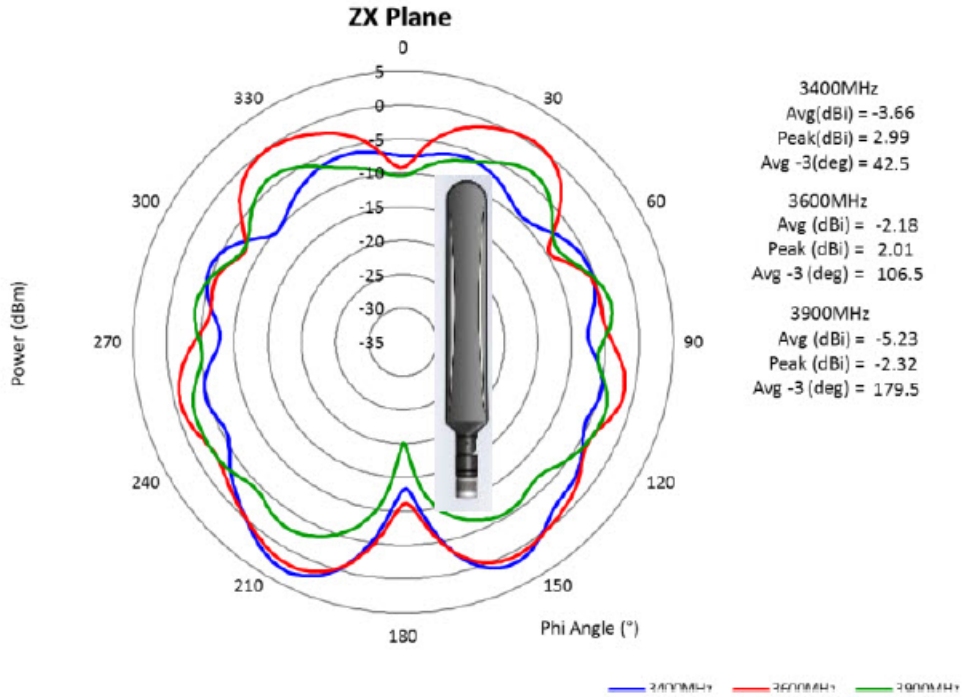

Figure 440: YZ Plane

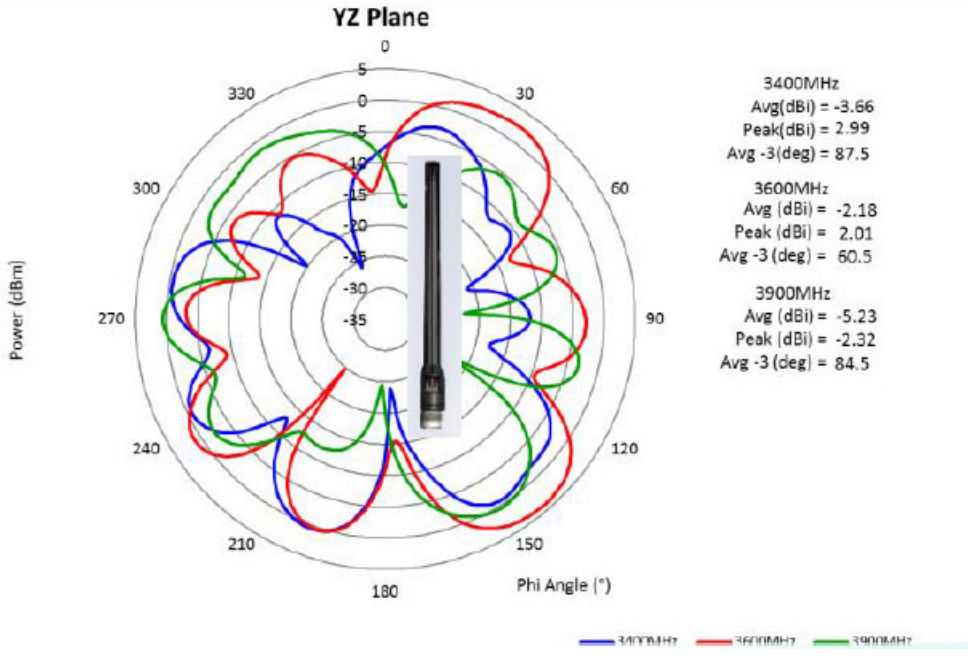

Gain Plots 5150-6000 MHz

Figure 441: XY Plane

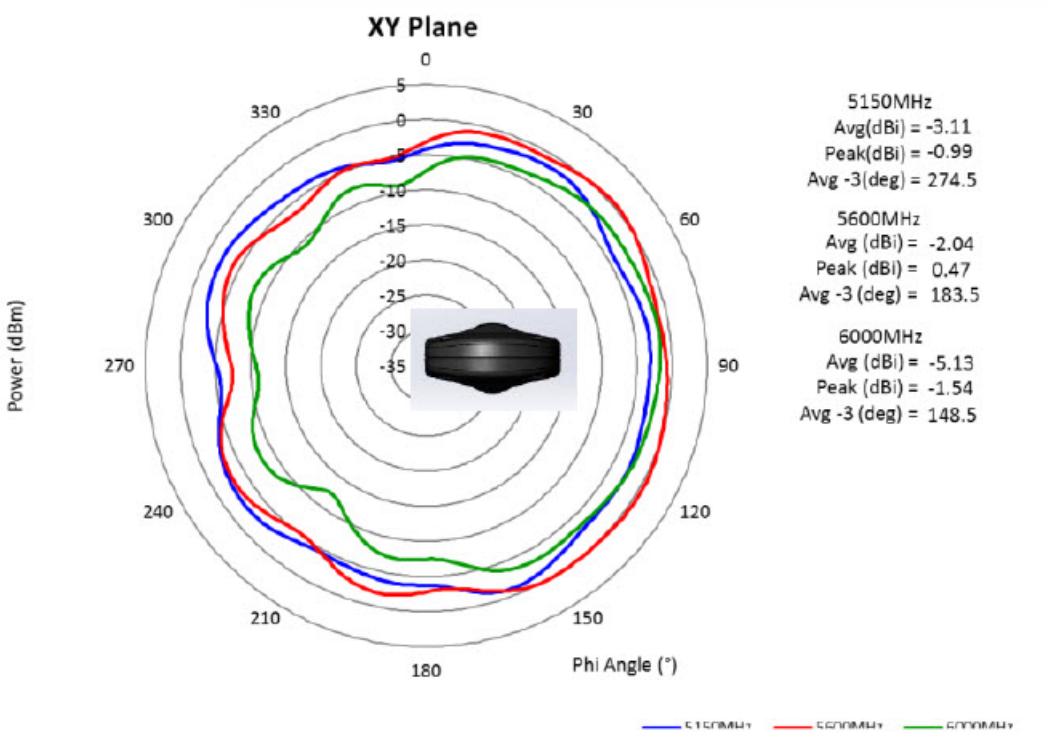

Figure 442: ZX Plane

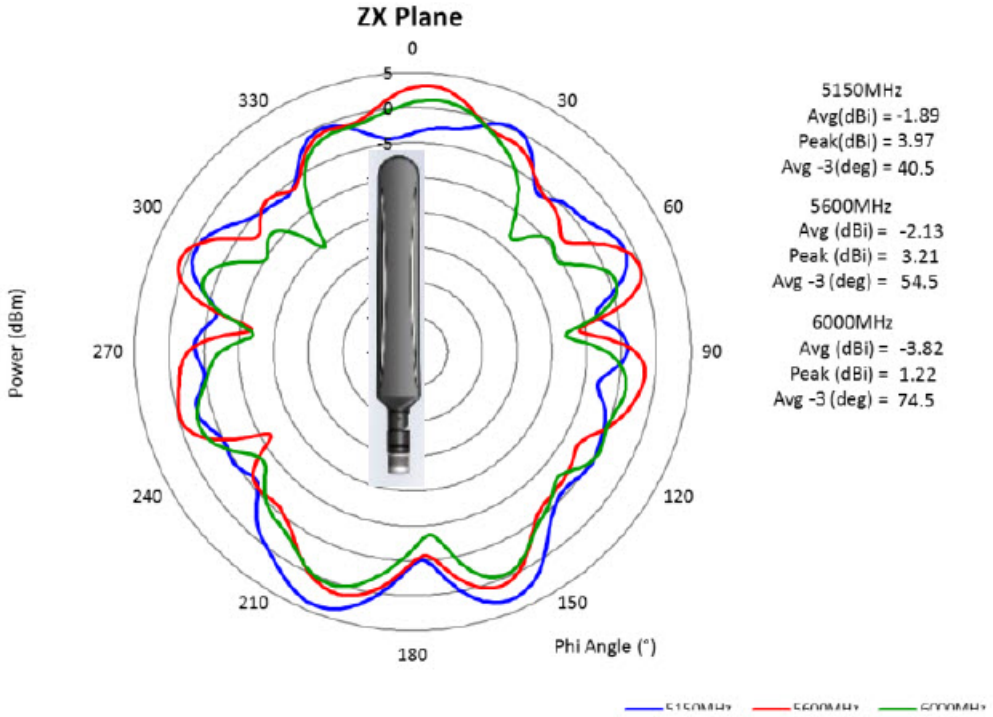

Figure 443: YZ Plane

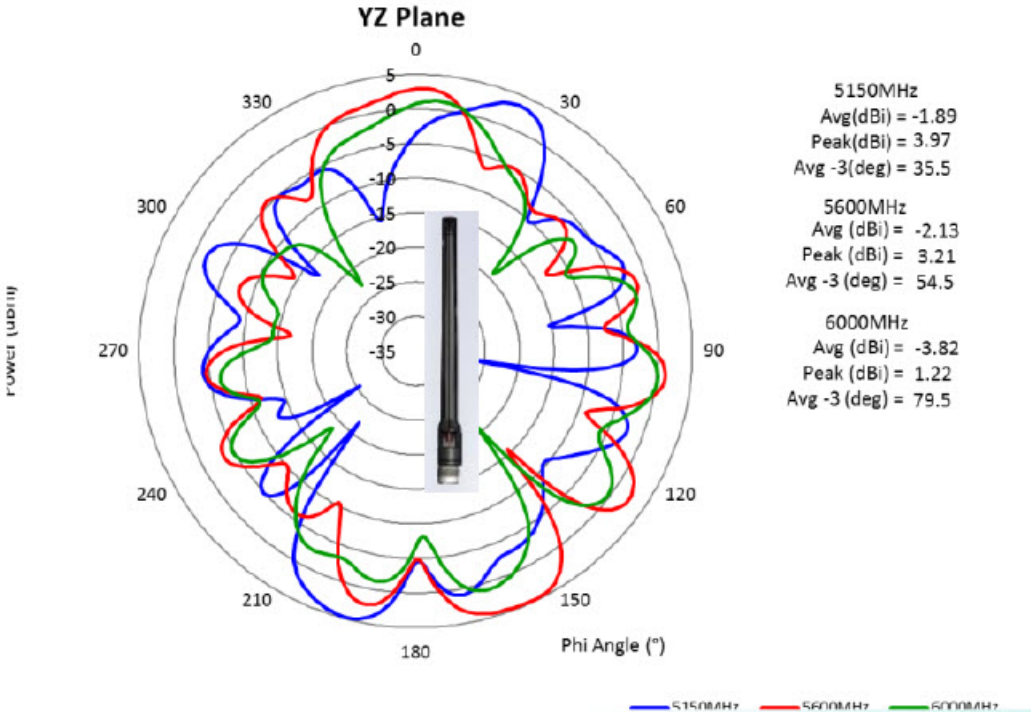

General Safety Precautions

Warning This warning symbol means danger. You are in a situation that could cause bodily injury. Before you work on any equipment, be aware of the hazards involved with electrical circuitry and be familiar with standard practices for preventing accidents. Use the statement number provided at the end of each warning to locate its translation in the translated safety warnings that accompanied this device. **Statement 1071**

Warning Do not work on the system or connect or disconnect cables during periods of lightning activity. **Statement 1001**

Warning Do not locate the outdoor antenna near overhead power lines or other electric light or power circuits, or where it can come into contact with such circuits. When installing the antenna, take extreme care not to come into contact with such circuits, as they may cause serious injury or death. For proper installation and grounding of the antenna, please refer to national and local codes (for example, U.S.:NFPA 70, National Electrical Code, Article 810, Canada:Canadian Electrical Code, Section 54). **Statement 1052**

Warning In order to comply with FCC radio frequency (RF) exposure limits, antennas should be located at a minimum of 7.9 inches (20 cm) or more from the body of all persons. **Statement 332**

Note For your safety, and to help you achieve a good installation, please read and follow these safety precautions.

Mast Mounted or Building Mounted Installations

The following instructions are common to most mast mounted or building mounted installations. For specific installation instructions for each antenna, see the antenna data-sheet and the router hardware installation guide.

- Find someone to help you—installing an antenna is often a two-person job.
- Select your installation site with safety, as well as performance, in mind. Remember that electric power lines and phone lines look alike. For your safety, assume that any overhead line can kill you.
- Contact your electric power company. Tell them your plans and ask them to come look at your proposed installation.
- Do not use a metal ladder.
- Do not work on a wet or windy day.
- Do dress properly—wear shoes with rubber soles and heels, rubber gloves, and a long-sleeved shirt or jacket.

- If the assembly starts to drop, move away from it and let it fall. Because the antenna, mast, cable, and metal guy wires are all excellent conductors of electrical current, even the slightest touch of any of these parts to a power line completes an electrical path through the antenna and the installer.
- If any part of the antenna system should come in contact with a power line, do not touch it or try to remove it yourself. Call your local power company to have it removed safely.
- If an accident should occur with the power lines, call for qualified emergency help immediately.
- Assemble your new antenna on the ground or a level surface at the installation site.
- Connect its coaxial cable while you are on the ground and attach the antenna to the mast.
- Ensure that the mast does not fall as you raise or remove it. Use a durable non-conductive rope secured at each two foot level as the mast is raised. Have an assistant tend the rope, ready to pull the mast clear of any hazards (such as power lines) should it begin to fall.
- Use the mounting bracket provided with the antenna.
- If the installation will use guy wires:
  - Install guy anchor bolts.
  - Estimate the length of guy wire and cut it before raising the mast.
  - Attach guy wires to a mast using guy rings.
  - In the case of a guyed (tall, thin mast) installation, you must have at least one assistant to hold the mast upright while the guy wires are attached and tightened to the anchor bolts.
- Attach a “DANGER” label at eye level on the mast.
- Install ground rods to remove any static electricity buildup and connect a ground wire to the mast and ground rod. Use ground rods designed for that purpose, not a spare piece of pipe.

Unused Antenna Ports

Port plugs must be installed in any unused antenna ports.

The weatherproof caps on the connectors protect the router interior from environmental elements including water, heat, cold, and dust. They are installed on unused ports before the router is shipped.

When you install a new antenna in a port with an N-connector:

- Chassis-mounted antennas—Remove the weather proof cap before installing a chassis-mounted antenna.
- External antennas—Remove weatherproof cap, then connect the supported Cisco cable to the connector.

Guidelines to Achieving Optimal RF and Antenna Performance

Antennas are a critical component of a wireless communication system. Selecting a suitable antenna, an optimal antenna location, or antenna site is essential for optimum performance of a wireless links.

This section covers general tips for optimizing RF performance of indoor and outdoor terrestrial radio systems in the 400-7125 MHz frequency range. Examples of terrestrial radio systems include 4G LTE, 5G NR, Wi-Fi,

LoRa, LR-WPAN and similar. In this context GPS SPS would not be considered a terrestrial system as the signal is received from space, not from another terrestrial site.

Because the antenna transmits and receives radio signals over the air, overall RF performance of the link is susceptible to RF obstructions and common sources of RF interference that can reduce throughput and range of the system.

Follow these guidelines to optimize performance. When in doubt, consult a qualified RF professional, and check with your solution partner for specific recommendations.

Antenna Model Selection and Performance

Consider the following when planning your installation:

- When selecting the antenna, ensure that it covers the frequency ranges or frequency bands of interest, and that it has good RF parameters such as antenna efficiency, VSWR and suitable radiation pattern for every frequency range that your application will use with this antenna.
- Antenna pattern is important. Omni-directional antennas have lower gain, but allow communicating to devices in all azimuth directions. Directional antennas concentrate the beam in a specific direction, making them ideal for point to point communication.
- When a system has multiple RF ports for receive and / or transmit, as is the case for 4G LTE , 5G NR or Wi-Fi, it is highly recommended to populate all the RF ports with suitable antennas to take advantage of MIMO, rather than rely on a single port or single antenna to save on cost. Please see the MIMO section for a detailed description of MIMO benefits.
- For RF systems that support multiple RF ports and multiple RF standards such as LTE, Wi-Fi, and GPS: consider using a multi-element antenna that integrates multiple antennas under the same radome (cover). Doing so may reduce cost compared to deploying and mounting a discrete single port antenna for every RF port.
- For communication between fixed infrastructure devices, such as mesh nodes or a point-to-point backhaul link, each device should have an antenna with the same polarization. If communicating with mobile devices that might be randomly oriented, consider dual-polarized antennas, such as those with both vertical and horizontal or slant +45° and -45° polarized elements.

Antenna Environmental Specifications

The selected antenna must have suitable mechanical and environmental specifications for the environment where it will be deployed. For example, shock and vibration specifications for transportation, corrosion resistant construction for marine and oil and gas industries, or IP (ingress protection) rating for outdoor deployment. Indoor antennas are typically not suitable for harsh industrial environments. Please check with your system integrator for environmental requirements for your application.

Antenna Accessories and Mounting

Consider the following when planning your installation:

- Carefully consider what type of other RF accessories, besides antenna, such as RF cables, lightning arrestors or RF adapters may be required in your installations. It is best to minimize long RF cable runs due to RF signal losses in the cable. Thinner RF cables have more RF loss , thicker cables are less flexible and more expensive.

- Carefully consider how the antenna will be physically mounted, as this may affect antenna selection. For example, a stud mount mechanical mounting design is a better fit for mounting on top of an electrical cabinet than a mast mount antenna.
- For outdoor deployments, follow installation instructions for the antenna. It is good practice to keep protective covers on the radio's RF ports and any antenna or accessory RF ports until the moment the interfaces are mated. This reduces chances of contamination, trapping water or condensation inside the connector, or accidental damage to RF interfaces.

MIMO Performance and Arrays

MIMO systems deliver benefits of higher SNR, higher reliability and higher throughput compared to single antenna systems. In more technical terms, MIMO delivers array gain, diversity gain and multiplexing gain compared to single antenna.

- Array gain — Improvement in SNR (signal to noise ratio) by coherently combining signals from multiple antennas. For example, increasing SNR through beamforming techniques.
- Diversity gain — Improvement in reliability by mitigating deep fading or strong destructive EM wave interference. For example, in a two-antenna system, if one antenna is experiencing deep fading due to an EM destructive null at its location at a given instant, the other antenna is unlikely to have a null at the same instant, and the combined SNR stays at a reliable level. In contrast, a single antenna would see SNR oscillating between good SNR and very poor SNR and reliability would degrade.
- Multiplexing gain — Increase in system capacity or throughput by sending independent data over multiple spatial streams simultaneously. The number of streams cannot be more than the number of antennas. For example, to support three spatial streams, a minimum of three antennas is required. Often there may be additional antennas for diversity or redundancy, such as in the case of 4x4:3, or 4x4 MIMO with 3 spatial streams.

If deploying multiple single-element antennas for a MIMO system in an array, ensure sufficient spacing between the antennas. Omnidirectional elements should generally be at least one wavelength apart at the lowest operating frequency.

Consider the following:

- For Wi-Fi systems operating in the 2.4, 5, and/or 6 GHz bands, space elements at least 5 inches (12.5 cm) apart.
- For 4G LTE and 5G systems with the lowest operating frequency of 617 MHz , space elements at least 20 inches (50 cm) apart.
- Note that spacing between elements inside multi-element MIMO antennas is often less than one wavelength. However multi-element antennas are engineered with MIMO performance in mind, by providing antenna diversity through pattern, polarization, and isolation between MIMO elements.

Antenna siting and location

Consider the following when planning your installation:

- Plan antenna location ahead of time. Ideal location for an antenna is in LOS (line of sight) of the counterpart that it is trying to communicate with. Under LOS conditions the signals propagate directly between the two communication nodes, without relying on signal bouncing off a wall or other structure to reach the counterpart. This is sometimes not possible to achieve in practice, but it is a useful goal to keep in mind when optimizing antenna location.

- While it is good to keep RF cables short, it is most desirable for an antenna to be in the best location it can be to provide the desired coverage.
- For large deployments involving multiple units communicating with each other across a complex urban or industrial landscape, consider running an RF propagation modeling study to predict approximate simulated coverage maps and determine initial placement of the units. A propagation study may help reduce overall deployment cost by discovering and mitigating issues with RF coverage before the infrastructure is physically installed.
- Keep the antenna away from metal obstructions such as heating and air-conditioning ducts, large ceiling trusses, building superstructures, and major power cabling runs. One exception is if the antenna is designed to be mounted on a ground plane. If mounting on a ground plane, mount the antenna on a flat metal surface away from adjacent obstructions.
- It is strongly recommended not to install antennas directly on the router or access point (AP), unless the router or AP is specifically engineered to directly mount the antennas. Products that are engineered for direct mounting of antennas specifically address each of the below issues.
- Reasons to mount antennas away from the router include:
    - Router location may not be optimal location for antenna to communicate with the counterpart wirelessly, so router and antenna may need to be in different locations.
    - Router may have a clutter of Ethernet cable and power cables around it, which will obstruct antenna signal.
    - A number of routers, such as the IR1835, are modular. They have plug-in RF modules for Wi-Fi , 4G LTE or 5G NR such as WP-WIFI6, P-LTEAP18-GL, P-5GS6-GL. These modules have RF connectors spaced close together, and while it is mechanically possible to install four or five antennas directly attached, this will result in significant degradation to RF performance of antennas due to mutual de-tuning between closely spaced antennas. It is strongly recommended to install antennas away from the chassis in modular cases.
- If installing an antenna indoors, consider that the density and electromagnetic properties of the materials used in the building construction determines the number of walls the signal can pass through and still maintain adequate coverage.
    - Paper and vinyl walls have very little effect on signal penetration.
    - Solid and pre-cast concrete walls limit signal penetration to one or two walls without degrading coverage.
    - Concrete and wood block walls limit signal penetration to three or four walls.
    - A signal can penetrate five or six walls constructed of drywall or wood.
    - A thick metal wall causes signals to reflect off, causing poor penetration.
    - A chain link fence or wire mesh spaced between 1 and 1 1/2 in. (2.5 and 3.8 cm) acts as a harmonic reflector that blocks a 2.4-GHz radio signal.
    - Install the antenna away from microwave ovens and 2-GHz cordless phones. These products can cause signal interference because they operate in the same frequency range as the device your antenna is connected to.

Installation Instructions

The following section contains information for installing the LTE-ANTM2-SMA-D antenna:

This antenna is designed to be mounted either directly or on an antenna extension stand to any Cisco 3G/4G wireless ISR, LTE and LTEA router with an SMA(f) connector by threading it onto the mating connector. Refer to the routers technical documentation for recommendations of direct mounting of antenna to the router versus installing the antenna on an antenna extension stand. Mount and deploy the antenna at the 0° position, 45° position, or the 90° position, and then change that position at will. The rotation of the antenna into the proper position can take place while the antenna is still loose on the mating connector. No software is required for this installation.

In addition to the antenna orientation, the installation location of 4G routers and cellular modules play a significant role in determining overall network performance. Routers located at the farthest coverage points might have 10 to 50 percent of the bandwidth available compared to routers located closer to the cellular base station tower.

Related Documentation

- For information about antennas and modules, see: http://www.cisco.com/go/cg-modules
- For information about omnidirectional and directional antennas, see: http://www.cisco.com/en/US/tech/tk722/tk809/technologies_tech_note09186a00807f34d3.shtml

Communications, Services, and Additional Information

- To receive timely, relevant information from Cisco, sign up at Cisco Profile Manager.
- To get the business impact you're looking for with the technologies that matter, visit Cisco Services.
- To submit a service request, visit Cisco Support.
- To discover and browse secure, validated enterprise-class apps, products, solutions, and services, visit Cisco DevNet.
- To obtain general networking, training, and certification titles, visit Cisco Press.
- To find warranty information for a specific product or product family, access Cisco Warranty Finder.

Cisco Bug Search Tool

Cisco Bug Search Tool (BST) is a web-based tool that acts as a gateway to the Cisco bug tracking system that maintains a comprehensive list of defects and vulnerabilities in Cisco products and software. BST provides you with detailed defect information about your products and software.

Documentation Feedback

To provide feedback about Cisco technical documentation, use the feedback form available in the right pane of every online document.

Cisco Support Community

Cisco Support Community is a forum for you to ask and answer questions, share suggestions, and collaborate with your peers. Join the forum at https://supportforums.cisco.com/index.jspa.

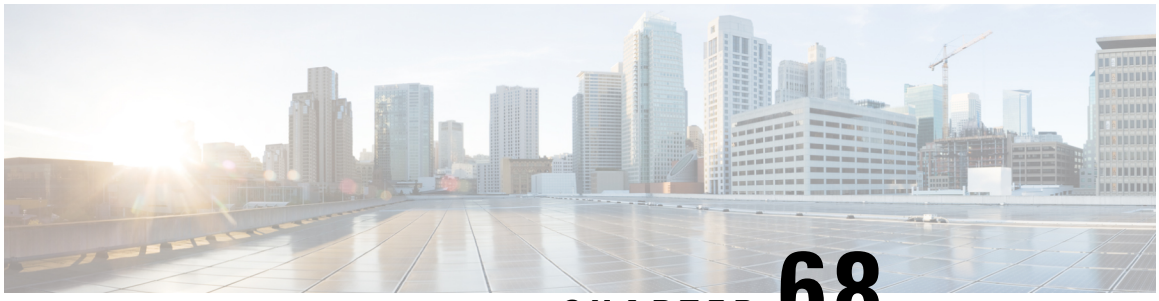

CHAPTER 68

Cisco Indoor, Dipole Antenna, single-port (W-ANTM2050D-RPSMA)

This chapter contains the following sections:

- Overview, on page 1019
- Specifications, on page 1020
- Antenna Radiation Patterns, on page 1021
- Antenna Impedance/VSWR, on page 1024
- Other Patterns, on page 1025
- General Safety Precautions, on page 1027
- Guidelines to Achieving Optimal RF and Antenna Performance, on page 1028
- Installation Instructions, on page 1032
- Related Documentation , on page 1032
- Communications, Services, and Additional Information, on page 1032

Overview

This document provides the description, supported features, and installation instructions for the Cisco Indoor, Dipole Antenna, single-port (W-ANTM2050D-RPSMA).

Caution Read the information in Safety Instructions before installing or replacing antennas.

The W-ANTM2050D-RPSMA antenna is designed for indoor use with Cisco Wi-Fi 5, 6 solutions and applicable Wi-Fi input modules (WIMs) with reverse-polarity SMA (RP-SMA) connectors.

This antenna has the following features:

- Support for frequencies of 2400-2480 MHz and 5150-5850 MHz.
- Articulating joint that can maneuver into three stop positions: 0°, 45°, and 90°.
- Reverse-polarity sub-miniature A connector that allows direct mounting of the antenna to applicable Cisco Wi-Fi pluggable input modules with RP-SMA connector(s).

- The RP-SMA connector design has added rotational frictional torque to ensure the SMA interface stays properly mated, and to reduce chances of a disconnect. The design is also more finger friendly compared to a classic SMA hex nut design.

Figure 444: Cisco W-ANTM2050D-RPSMA Antenna



Specifications

Table 84: Specifications of the W-ANTM2050D-RPSMA antenna

Operating Frequencies	• 2400-2480 MHz • 5150-5850 MHz
Polarization	Linear, Vertical
Nominal Impedance	50 Ohms
Peak Gain	• 2400-2480 MHz - 1.5 dBi • 5150-5850 MHz - 3.5 dBi **Note** The standalone antenna peak gain numbers are provided above. When you install an antenna close to metallic objects or directly on chassis, the peak gain will be affected. We recommend that you keep antennas away from very large chassis and metallic objects. You can install antennas directly on smaller or medium size chassis. In all cases, we recommend that you keep different antennas away from each other and from various known sources of electromagnetic radiation.
VSWR	• 2.0:1 @ 2400-2480 MHz • 2.0:1 @ 5150-5850 MHz
Power withstanding	3 W
DC Power	No DC power required for W-ANTM2050D-RPSMA antenna operation.
Dimensions	6.4” (L) x 0.83” (W) (161 x 21 mm)
Weight	33.5 grams
Average Efficiency	> 65% @ 2400MHz - 2480MH >70% @ 5150MHz - 5850MHz
Temperature Range	-20°C to + 60°C (Operating) -40°C to + 85°C (Storage)

Figure 445: Mechanical Drawing

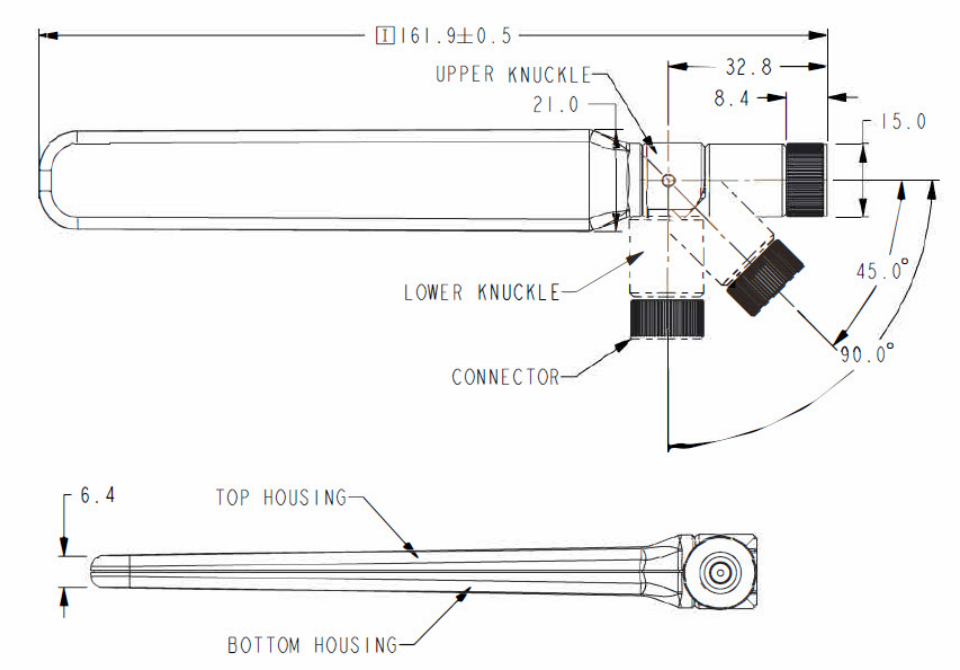

Antenna Radiation Patterns

The following graphics show the radiation patterns at different frequencies.

Radiation Pattern at 2400 MHz

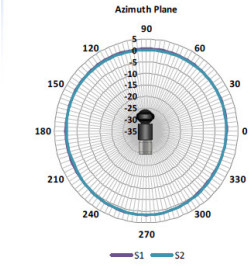

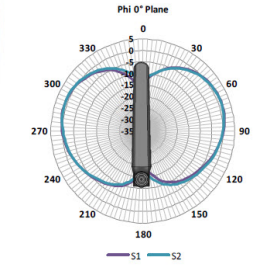

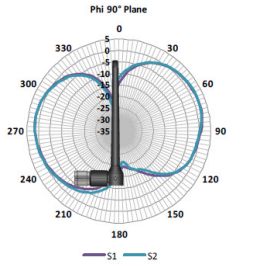

Radiation Pattern at 2450 MHz

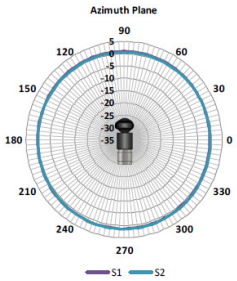

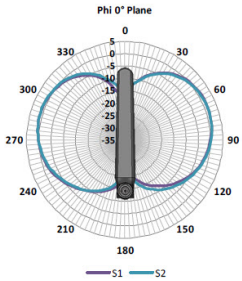

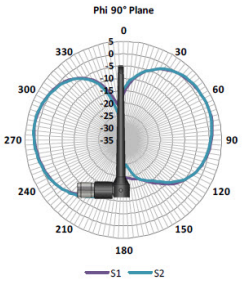

Radiation Pattern at 2500 MHz

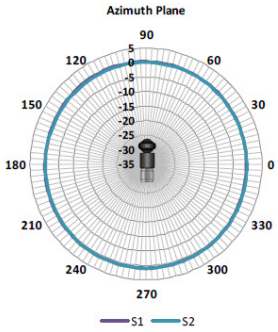

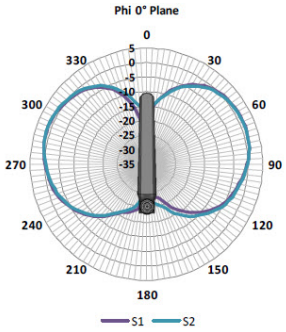

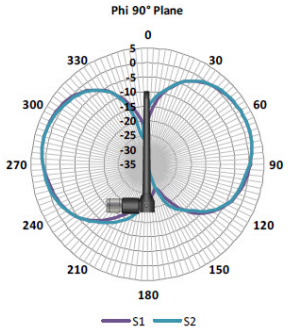

Radiation Pattern at 5150 MHz

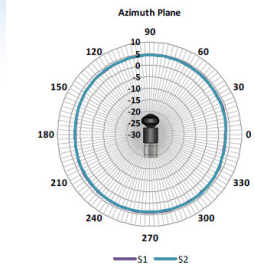

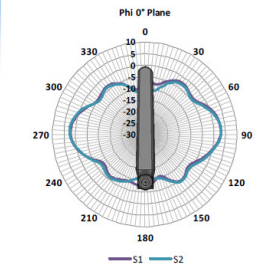

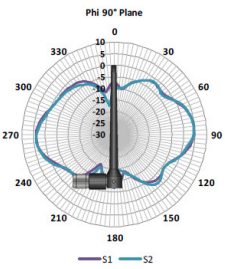

Radiation Pattern at 5250 MHz

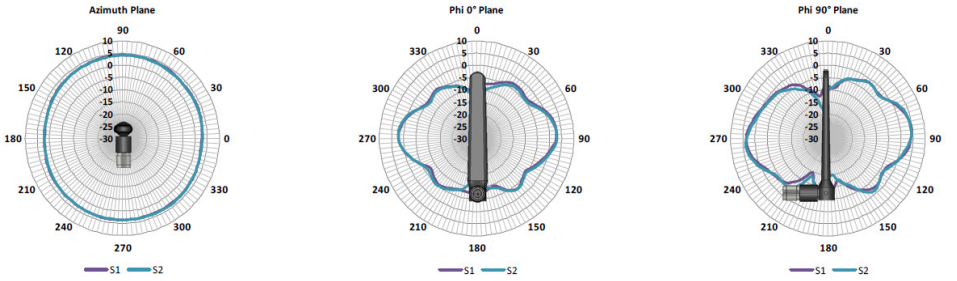

Radiation Pattern at 5350 MHz

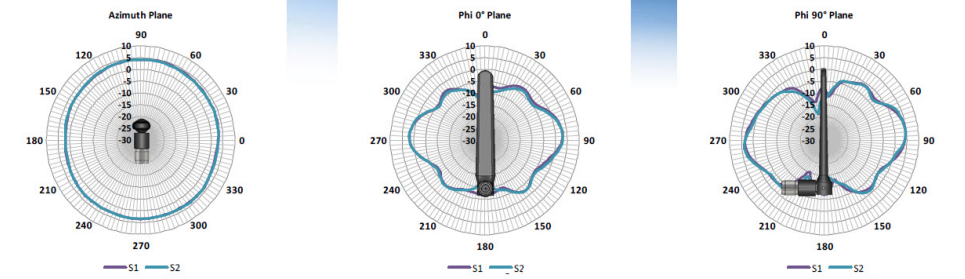

Radiation Pattern at 5450 MHz

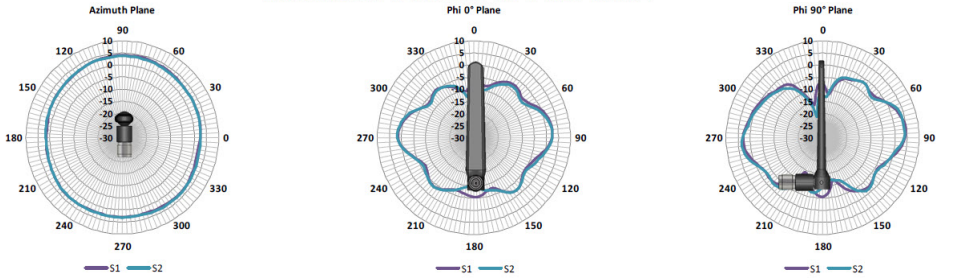

Radiation Pattern at 5550 MHz

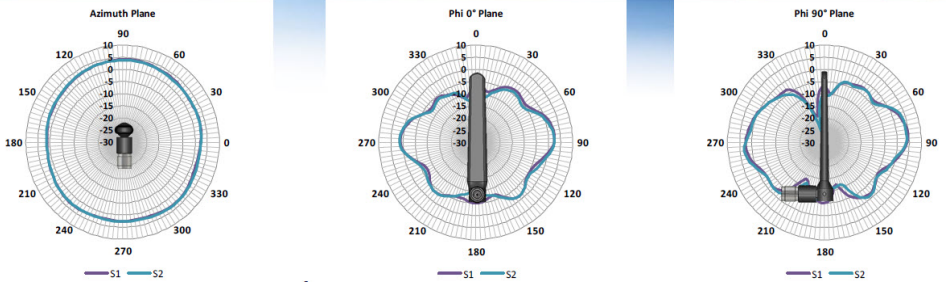

Radiation Pattern at 5650 MHz

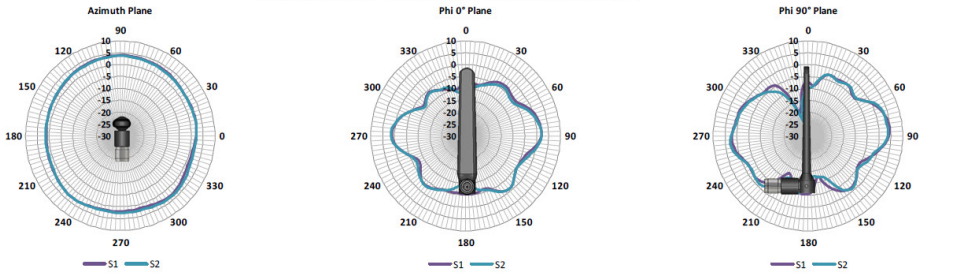

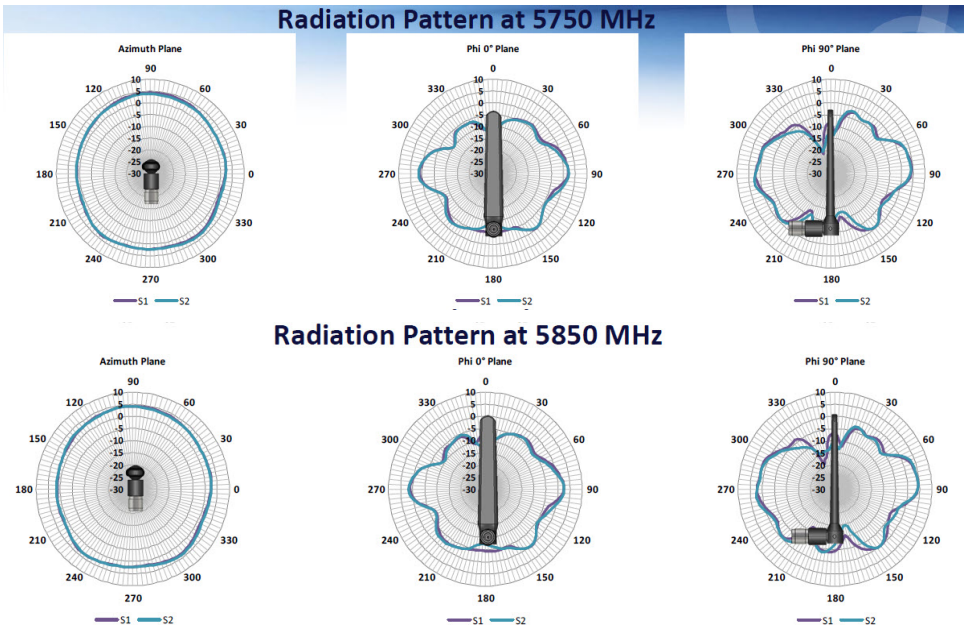

Antenna Impedance/VSWR

The following two graphics show the Low Band (2.4 GHz band) and High Band (5 GHz band) VSWR Performance.

Note Said performance is measured across multiple antennas under test (AUTs).

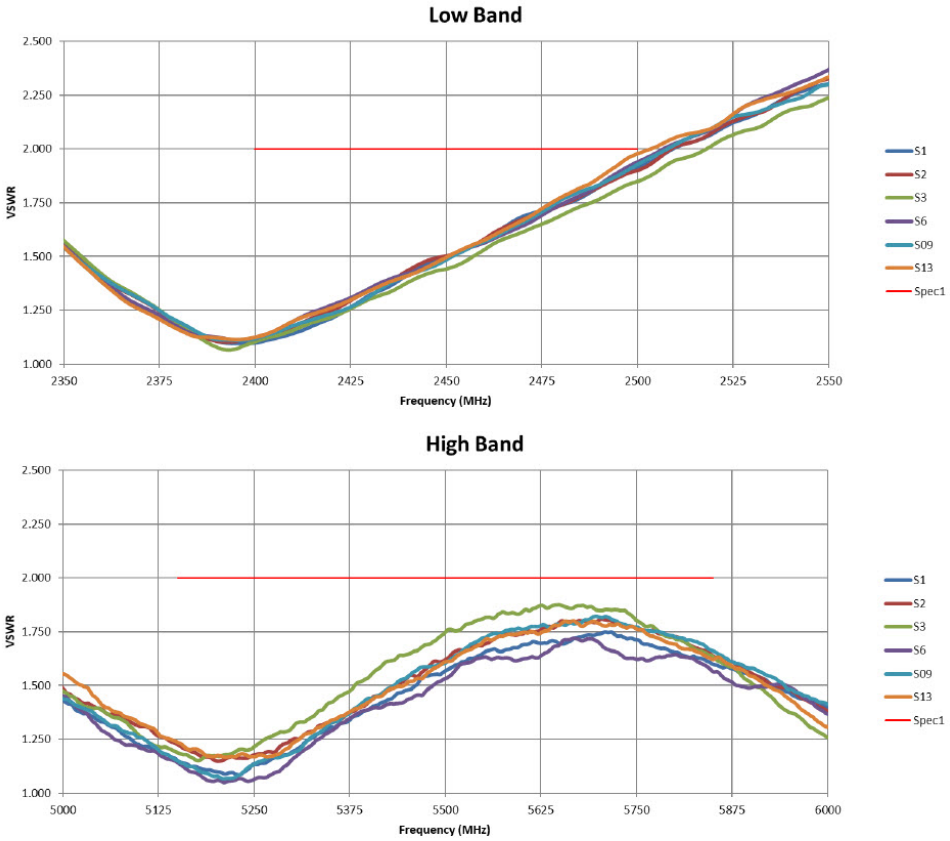

Other Patterns

The following three graphics show the 3D Max Gain, Azimuth Plane Ripple, and the E-Plane 3dB BW.

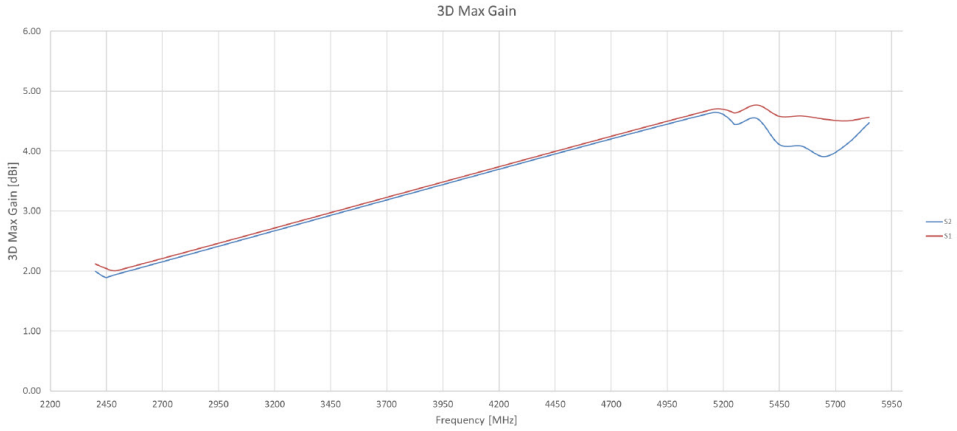
3D Max Gain
3D Max Gain [dBi]
6.00
5.00
4.00
3.00
2.00
1.00
0.00
2200 2450 2700 2950 3200 3450 3700 3950 4200 4450 4700 4950 5200 5450 5700 5950
Frequency [MHz]
S2
S1

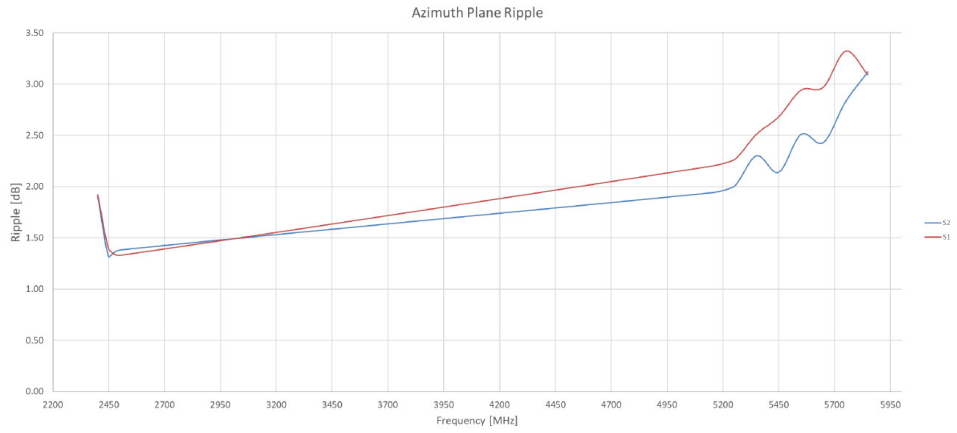
Azimuth Plane Ripple
Ripple [dB]
3.50
3.00
2.50
2.00
1.50
1.00
0.50
0.00
2200 2450 2700 2950 3200 3450 3700 3950 4200 4450 4700 4950 5200 5450 5700 5950
Frequency [MHz]
S2
S1

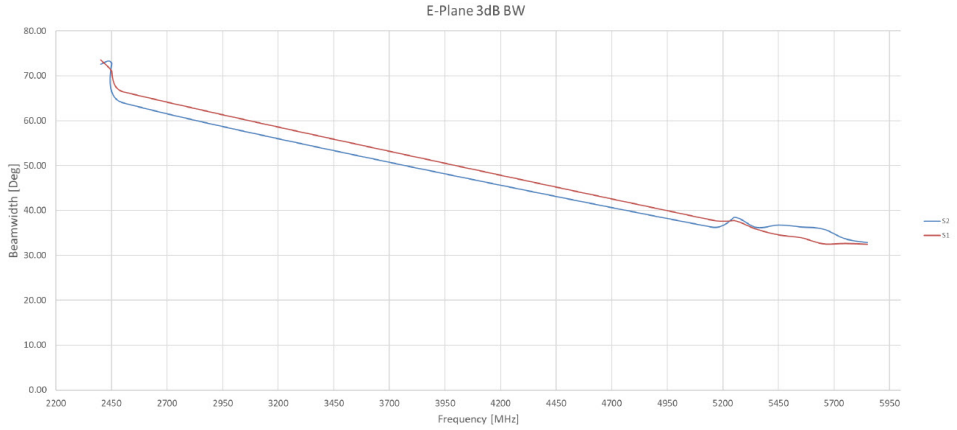
E-Plane 3dB BW
Beamwidth [Deg]
80.00
70.00
60.00
50.00
40.00
30.00
20.00
10.00
0.00
2200 2450 2700 2950 3200 3450 3700 3950 4200 4450 4700 4950 5200 5450 5700 5950
Frequency [MHz]
S2
S1

General Safety Precautions

Warning This warning symbol means danger. You are in a situation that could cause bodily injury. Before you work on any equipment, be aware of the hazards involved with electrical circuitry and be familiar with standard practices for preventing accidents. Use the statement number provided at the end of each warning to locate its translation in the translated safety warnings that accompanied this device. **Statement 1071**

Warning Do not work on the system or connect or disconnect cables during periods of lightning activity. **Statement 1001**

Warning Do not locate the outdoor antenna near overhead power lines or other electric light or power circuits, or where it can come into contact with such circuits. When installing the antenna, take extreme care not to come into contact with such circuits, as they may cause serious injury or death. For proper installation and grounding of the antenna, please refer to national and local codes (for example, U.S.:NFPA 70, National Electrical Code, Article 810, Canada:Canadian Electrical Code, Section 54). **Statement 1052**

Warning In order to comply with FCC radio frequency (RF) exposure limits, antennas should be located at a minimum of 7.9 inches (20 cm) or more from the body of all persons. **Statement 332**

Note For your safety, and to help you achieve a good installation, please read and follow these safety precautions.

Mast Mounted or Building Mounted Installations

The following instructions are common to most mast mounted or building mounted installations. For specific installation instructions for each antenna, see the antenna data-sheet and the router hardware installation guide.

- Find someone to help you—installing an antenna is often a two-person job.
- Select your installation site with safety, as well as performance, in mind. Remember that electric power lines and phone lines look alike. For your safety, assume that any overhead line can kill you.
- Contact your electric power company. Tell them your plans and ask them to come look at your proposed installation.
- Do not use a metal ladder.
- Do not work on a wet or windy day.
- Do dress properly—wear shoes with rubber soles and heels, rubber gloves, and a long-sleeved shirt or jacket.

- If the assembly starts to drop, move away from it and let it fall. Because the antenna, mast, cable, and metal guy wires are all excellent conductors of electrical current, even the slightest touch of any of these parts to a power line completes an electrical path through the antenna and the installer.
- If any part of the antenna system should come in contact with a power line, do not touch it or try to remove it yourself. Call your local power company to have it removed safely.
- If an accident should occur with the power lines, call for qualified emergency help immediately.
- Assemble your new antenna on the ground or a level surface at the installation site.
- Connect its coaxial cable while you are on the ground and attach the antenna to the mast.
- Ensure that the mast does not fall as you raise or remove it. Use a durable non-conductive rope secured at each two foot level as the mast is raised. Have an assistant tend the rope, ready to pull the mast clear of any hazards (such as power lines) should it begin to fall.
- Use the mounting bracket provided with the antenna.
- If the installation will use guy wires:
  - Install guy anchor bolts.
  - Estimate the length of guy wire and cut it before raising the mast.
  - Attach guy wires to a mast using guy rings.
  - In the case of a guyed (tall, thin mast) installation, you must have at least one assistant to hold the mast upright while the guy wires are attached and tightened to the anchor bolts.
- Attach a “DANGER” label at eye level on the mast.
- Install ground rods to remove any static electricity buildup and connect a ground wire to the mast and ground rod. Use ground rods designed for that purpose, not a spare piece of pipe.

Unused Antenna Ports

Port plugs must be installed in any unused antenna ports.

The weatherproof caps on the connectors protect the router interior from environmental elements including water, heat, cold, and dust. They are installed on unused ports before the router is shipped.

When you install a new antenna in a port with an N-connector:

- Chassis-mounted antennas—Remove the weather proof cap before installing a chassis-mounted antenna.
- External antennas—Remove weatherproof cap, then connect the supported Cisco cable to the connector.

Guidelines to Achieving Optimal RF and Antenna Performance

Antennas are a critical component of a wireless communication system. Selecting a suitable antenna, an optimal antenna location, or antenna site is essential for optimum performance of a wireless links.

This section covers general tips for optimizing RF performance of indoor and outdoor terrestrial radio systems in the 400-7125 MHz frequency range. Examples of terrestrial radio systems include 4G LTE, 5G NR, Wi-Fi,

LoRa, LR-WPAN and similar. In this context GPS SPS would not be considered a terrestrial system as the signal is received from space, not from another terrestrial site.

Because the antenna transmits and receives radio signals over the air, overall RF performance of the link is susceptible to RF obstructions and common sources of RF interference that can reduce throughput and range of the system.

Follow these guidelines to optimize performance. When in doubt, consult a qualified RF professional, and check with your solution partner for specific recommendations.

Antenna Model Selection and Performance

Consider the following when planning your installation:

- When selecting the antenna, ensure that it covers the frequency ranges or frequency bands of interest, and that it has good RF parameters such as antenna efficiency, VSWR and suitable radiation pattern for every frequency range that your application will use with this antenna.
- Antenna pattern is important. Omni-directional antennas have lower gain, but allow communicating to devices in all azimuth directions. Directional antennas concentrate the beam in a specific direction, making them ideal for point to point communication.
- When a system has multiple RF ports for receive and / or transmit, as is the case for 4G LTE , 5G NR or Wi-Fi, it is highly recommended to populate all the RF ports with suitable antennas to take advantage of MIMO, rather than rely on a single port or single antenna to save on cost. Please see the MIMO section for a detailed description of MIMO benefits.
- For RF systems that support multiple RF ports and multiple RF standards such as LTE, Wi-Fi, and GPS: consider using a multi-element antenna that integrates multiple antennas under the same radome (cover). Doing so may reduce cost compared to deploying and mounting a discrete single port antenna for every RF port.
- For communication between fixed infrastructure devices, such as mesh nodes or a point-to-point backhaul link, each device should have an antenna with the same polarization. If communicating with mobile devices that might be randomly oriented, consider dual-polarized antennas, such as those with both vertical and horizontal or slant +45° and -45° polarized elements.

Antenna Environmental Specifications

The selected antenna must have suitable mechanical and environmental specifications for the environment where it will be deployed. For example, shock and vibration specifications for transportation, corrosion resistant construction for marine and oil and gas industries, or IP (ingress protection) rating for outdoor deployment. Indoor antennas are typically not suitable for harsh industrial environments. Please check with your system integrator for environmental requirements for your application.

Antenna Accessories and Mounting

Consider the following when planning your installation:

- Carefully consider what type of other RF accessories, besides antenna, such as RF cables, lightning arrestors or RF adapters may be required in your installations. It is best to minimize long RF cable runs due to RF signal losses in the cable. Thinner RF cables have more RF loss , thicker cables are less flexible and more expensive.

- Carefully consider how the antenna will be physically mounted, as this may affect antenna selection. For example, a stud mount mechanical mounting design is a better fit for mounting on top of an electrical cabinet than a mast mount antenna.
- For outdoor deployments, follow installation instructions for the antenna. It is good practice to keep protective covers on the radio's RF ports and any antenna or accessory RF ports until the moment the interfaces are mated. This reduces chances of contamination, trapping water or condensation inside the connector, or accidental damage to RF interfaces.

MIMO Performance and Arrays

MIMO systems deliver benefits of higher SNR, higher reliability and higher throughput compared to single antenna systems. In more technical terms, MIMO delivers array gain, diversity gain and multiplexing gain compared to single antenna.

- Array gain — Improvement in SNR (signal to noise ratio) by coherently combining signals from multiple antennas. For example, increasing SNR through beamforming techniques.
- Diversity gain — Improvement in reliability by mitigating deep fading or strong destructive EM wave interference. For example, in a two-antenna system, if one antenna is experiencing deep fading due to an EM destructive null at its location at a given instant, the other antenna is unlikely to have a null at the same instant, and the combined SNR stays at a reliable level. In contrast, a single antenna would see SNR oscillating between good SNR and very poor SNR and reliability would degrade.
- Multiplexing gain — Increase in system capacity or throughput by sending independent data over multiple spatial streams simultaneously. The number of streams cannot be more than the number of antennas. For example, to support three spatial streams, a minimum of three antennas is required. Often there may be additional antennas for diversity or redundancy, such as in the case of 4x4:3, or 4x4 MIMO with 3 spatial streams.

If deploying multiple single-element antennas for a MIMO system in an array, ensure sufficient spacing between the antennas. Omnidirectional elements should generally be at least one wavelength apart at the lowest operating frequency.

Consider the following:

- For Wi-Fi systems operating in the 2.4, 5, and/or 6 GHz bands, space elements at least 5 inches (12.5 cm) apart.
- For 4G LTE and 5G systems with the lowest operating frequency of 617 MHz , space elements at least 20 inches (50 cm) apart.
- Note that spacing between elements inside multi-element MIMO antennas is often less than one wavelength. However multi-element antennas are engineered with MIMO performance in mind, by providing antenna diversity through pattern, polarization, and isolation between MIMO elements.

Antenna siting and location

Consider the following when planning your installation:

- Plan antenna location ahead of time. Ideal location for an antenna is in LOS (line of sight) of the counterpart that it is trying to communicate with. Under LOS conditions the signals propagate directly between the two communication nodes, without relying on signal bouncing off a wall or other structure to reach the counterpart. This is sometimes not possible to achieve in practice, but it is a useful goal to keep in mind when optimizing antenna location.

- While it is good to keep RF cables short, it is most desirable for an antenna to be in the best location it can be to provide the desired coverage.
- For large deployments involving multiple units communicating with each other across a complex urban or industrial landscape, consider running an RF propagation modeling study to predict approximate simulated coverage maps and determine initial placement of the units. A propagation study may help reduce overall deployment cost by discovering and mitigating issues with RF coverage before the infrastructure is physically installed.
- Keep the antenna away from metal obstructions such as heating and air-conditioning ducts, large ceiling trusses, building superstructures, and major power cabling runs. One exception is if the antenna is designed to be mounted on a ground plane. If mounting on a ground plane, mount the antenna on a flat metal surface away from adjacent obstructions.
- It is strongly recommended not to install antennas directly on the router or access point (AP), unless the router or AP is specifically engineered to directly mount the antennas. Products that are engineered for direct mounting of antennas specifically address each of the below issues.
- Reasons to mount antennas away from the router include:
    - Router location may not be optimal location for antenna to communicate with the counterpart wirelessly, so router and antenna may need to be in different locations.
    - Router may have a clutter of Ethernet cable and power cables around it, which will obstruct antenna signal.
    - A number of routers, such as the IR1835, are modular. They have plug-in RF modules for Wi-Fi , 4G LTE or 5G NR such as WP-WIFI6, P-LTEAP18-GL, P-5GS6-GL. These modules have RF connectors spaced close together, and while it is mechanically possible to install four or five antennas directly attached, this will result in significant degradation to RF performance of antennas due to mutual de-tuning between closely spaced antennas. It is strongly recommended to install antennas away from the chassis in modular cases.
- If installing an antenna indoors, consider that the density and electromagnetic properties of the materials used in the building construction determines the number of walls the signal can pass through and still maintain adequate coverage.
    - Paper and vinyl walls have very little effect on signal penetration.
    - Solid and pre-cast concrete walls limit signal penetration to one or two walls without degrading coverage.
    - Concrete and wood block walls limit signal penetration to three or four walls.
    - A signal can penetrate five or six walls constructed of drywall or wood.
    - A thick metal wall causes signals to reflect off, causing poor penetration.
    - A chain link fence or wire mesh spaced between 1 and 1 1/2 in. (2.5 and 3.8 cm) acts as a harmonic reflector that blocks a 2.4-GHz radio signal.
    - Install the antenna away from microwave ovens and 2-GHz cordless phones. These products can cause signal interference because they operate in the same frequency range as the device your antenna is connected to.

Installation Instructions

The following section contains information for installing the W-ANTM2050D-RPSMA antenna:

This antenna is designed to be mounted either directly or on an antenna extension stand to Cisco Wi-Fi input modules (WIMs) with reverse-polarity SMA (RP-SMA) connectors by threading it onto the mating connector. Refer to the routers technical documentation for recommendations of direct mounting of antenna to the router versus installing the antenna on an antenna extension stand. Mount and deploy the antenna at the 0° position, 45° position, or the 90° position, and then change that position at will. The rotation of the antenna into the proper position can take place while the antenna is still loose on the mating connector. No software is required for this installation.

In addition to the antenna orientation, the installation location of Wi-Fi/WLAN routers and cellular modules play a significant role in determining overall network performance. Routers located at the farthest coverage points might have 10 to 50 percent of the bandwidth available compared to routers located closer to the cellular base station tower.

Related Documentation

- For information about antennas and modules, see: http://www.cisco.com/go/cg-modules
- For information about omnidirectional and directional antennas, see: http://www.cisco.com/en/US/tech/tk722/tk809/technologies_tech_note09186a00807f34d3.shtml

Communications, Services, and Additional Information

- To receive timely, relevant information from Cisco, sign up at Cisco Profile Manager.
- To get the business impact you're looking for with the technologies that matter, visit Cisco Services.
- To submit a service request, visit Cisco Support.
- To discover and browse secure, validated enterprise-class apps, products, solutions, and services, visit Cisco DevNet.
- To obtain general networking, training, and certification titles, visit Cisco Press.
- To find warranty information for a specific product or product family, access Cisco Warranty Finder.

Cisco Bug Search Tool

Cisco Bug Search Tool (BST) is a web-based tool that acts as a gateway to the Cisco bug tracking system that maintains a comprehensive list of defects and vulnerabilities in Cisco products and software. BST provides you with detailed defect information about your products and software.

Documentation Feedback

To provide feedback about Cisco technical documentation, use the feedback form available in the right pane of every online document.

Cisco Support Community

Cisco Support Community is a forum for you to ask and answer questions, share suggestions, and collaborate with your peers. Join the forum at https://supportforums.cisco.com/index.jspa.

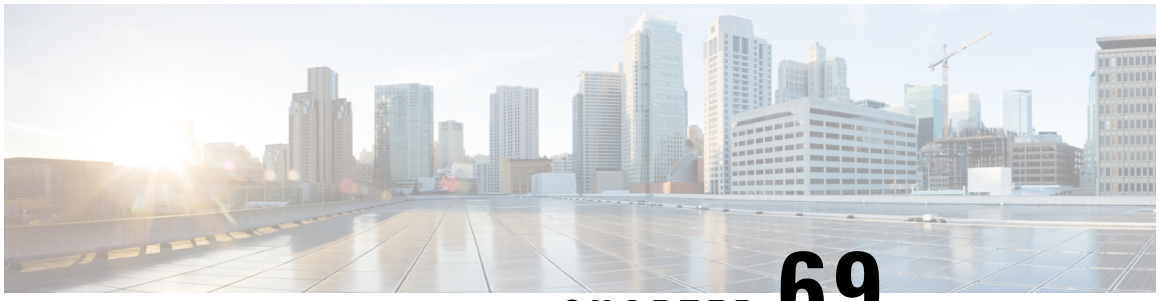

CHAPTER 69

Outdoor Panel Antenna for WiMAX 1.8, 2.5, and 3.8 GHz

•
• Overview, on page 1035
• WiMAX 1.8 GHz Technical Specifications, on page 1036
• WiMAX 2.5 GHz Technical Specifications, on page 1037
• Radiation Patterns, on page 1038
• WiMAX 3.8 GHz Technical Specifications, on page 1038
• General Safety Precautions, on page 1039
• Guidelines to Achieving Optimal RF and Antenna Performance, on page 1041
• Antenna Installation, on page 1044
• Connecting the Antenna to the Router, on page 1049
• Communications, Services, and Additional Information, on page 1049

Overview

The Outdoor Panel Antenna for WiMAX is designed to cover frequencies from 1.8 to 3.x GHz and support the Cisco CGR 1240 and the 1120 routers. This section provides the antenna specifications and mounting instructions.

- WiMAX 1.8 GHz is designed to cover frequencies from 1.8 to 1.83GHz (ANT-1.8-PNL-OUT-N)
- WiMAX 2.5 GHz is designed to cover frequencies from 2.3 to 2.7 GHz (ANT-2.X-PNL-OUT-N)
- WiMAX 3.x GHz is designed to cover frequencies from 3.3 to 3.8 GHz (ANT-3.X-PNL-OUT-N)

Figure 446: Flat Panel WiMAX Antenna



WiMAX 1.8 GHz Technical Specifications

The WiMAX 1.8 GHz antenna features the following:

- Low profile
- Wall mount, pipe mount
- Indoor and outdoors
- Panel mounted type N female connector
- Adjustable mounting brackets for outdoor installations

This section lists the technical information for the Flat Panel Outdoor WiMAX Antenna.

RF Specifications

Specification	Description
Frequency	1.8 to 1.83 GHz
VSWR	< 1.5
Nominal gain	16 +/- 1 dBi
3 dB horizontal beamwidth	22’
3 dB vertical beamwidth	22’
F/B ratio total power	> 20 dB
Polarization	Dual linear (vertical and horizontal) or slant +/- 45 degrees
Nominal impedance	50 ohms
Radiation pattern	Directional

Mechanical Specifications

Specification	Description
Type	Directional panel
Polarization	Dual linear
Mount style	Wall or pipe mount (adjustable mount included)
Environment	Outdoor
Termination	N female (x2)
Antenna size	14.5 x 14.5 x 1.75 in. (36.8 x 36.8 x 4.4 cm)
Weight	3.5 lbs (1.6 kg)
Temperature range (operating)	-40 to 185-degrees F (-40 to 85-degrees C)
Maximum input power	20 Watts
Radome material	UL94-V0 ASA radome
Material substance compliance	ROHS compliant

WiMAX 2.5 GHz Technical Specifications

The WiMAX 2.5 antenna Panel Outdoor 3G directional panel antenna features the following:

- Low profile
- Wall mount, pipe mount
- Indoor and outdoors
- 2 x type N female connector

This section lists the technical information for the Flat Panel Outdoor WiMAX Antenna.

Specification	Description
Type	Directional panel
Frequency	2.3 to 2.7 GHz
Nominal gain	16 dBi, (2.3 to 2.4 GHz) 18 dBi (2.4 to 2.7 GHz)
Polarization	Dual linear (vertical and horizontal) or slant +/- 45 degrees
Maximum input power	25 Watts
Antenna	14.5 x 14.5 x 1.75 in. (36.8 x 36.8 x 4.4 cm)
Weight	3.5 lbs (1.6 kg)

Specification	Description
Connector	Dual type N female
Mount style	Wall or pipe mount
Environment	Outdoor
Temperature range (operating)	-40 to 185-degrees F (-40 to 85-degrees C)
Radiation pattern	Directional

Radiation Patterns

The Flat Panel Outdoor WiMAX Antenna has Azimuth radiation patterns:

Figure 447: Flat Panel WiMAX Antenna Radiation Patterns—Low Band

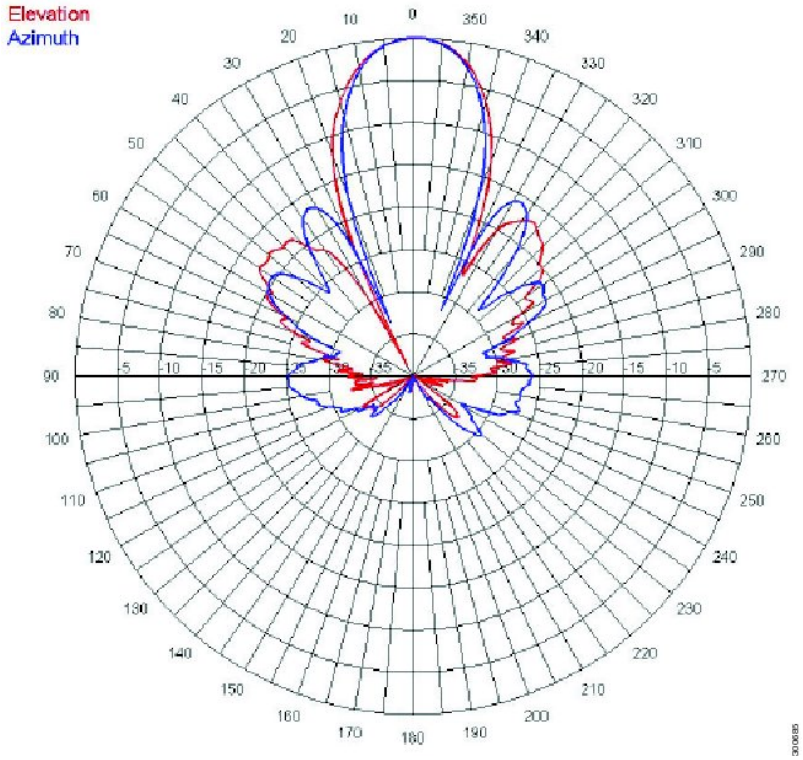

WiMAX 3.8 GHz Technical Specifications

The WiMAX 3.8 GHz antenna features the following:

- Low profile
- Wall mount, pipe mount
- Indoor and outdoors

- 2 x type N female connector

This section lists the technical information for the Flat Panel Outdoor WiMAX Antenna.

Specification	Description
Type	Directional panel
Frequency	3.3 to 3.8 GHz
Nominal gain	18 dBi
Polarization	Dual linear (vertical and horizontal) or slant +/- 45 degrees
Maximum input power	25 Watts
Antenna size	14.5 x 14.5 x 1.75 in. (36.8 x 36.8 x 4.4 cm)
Weight	3.5 lbs (1.6 kg)
Connector	Dual type N female
Mount Style	Wall or pipe mount
Environment	Outdoor
Temperature range (operating)	-40 to 185-degrees F (-40 to 85-degrees C)
Radiation pattern	Directional

General Safety Precautions

Warning This warning symbol means danger. You are in a situation that could cause bodily injury. Before you work on any equipment, be aware of the hazards involved with electrical circuitry and be familiar with standard practices for preventing accidents. Use the statement number provided at the end of each warning to locate its translation in the translated safety warnings that accompanied this device. **Statement 1071**

Warning Do not work on the system or connect or disconnect cables during periods of lightning activity. **Statement 1001**

Warning Do not locate the outdoor antenna near overhead power lines or other electric light or power circuits, or where it can come into contact with such circuits. When installing the antenna, take extreme care not to come into contact with such circuits, as they may cause serious injury or death. For proper installation and grounding of the antenna, please refer to national and local codes (for example, U.S.:NFPA 70, National Electrical Code, Article 810, Canada:Canadian Electrical Code, Section 54). **Statement 1052**

Warning In order to comply with FCC radio frequency (RF) exposure limits, antennas should be located at a minimum of 7.9 inches (20 cm) or more from the body of all persons. **Statement 332**

Note For your safety, and to help you achieve a good installation, please read and follow these safety precautions.

Mast Mounted or Building Mounted Installations

The following instructions are common to most mast mounted or building mounted installations. For specific installation instructions for each antenna, see the antenna data-sheet and the router hardware installation guide.

- Find someone to help you—installing an antenna is often a two-person job.
- Select your installation site with safety, as well as performance, in mind. Remember that electric power lines and phone lines look alike. For your safety, assume that any overhead line can kill you.
- Contact your electric power company. Tell them your plans and ask them to come look at your proposed installation.
- Do not use a metal ladder.
- Do not work on a wet or windy day.
- Do dress properly—wear shoes with rubber soles and heels, rubber gloves, and a long-sleeved shirt or jacket.
- If the assembly starts to drop, move away from it and let it fall. Because the antenna, mast, cable, and metal guy wires are all excellent conductors of electrical current, even the slightest touch of any of these parts to a power line completes an electrical path through the antenna and the installer.
- If any part of the antenna system should come in contact with a power line, do not touch it or try to remove it yourself. Call your local power company to have it removed safely.
- If an accident should occur with the power lines, call for qualified emergency help immediately.
- Assemble your new antenna on the ground or a level surface at the installation site.
- Connect its coaxial cable while you are on the ground and attach the antenna to the mast.
- Ensure that the mast does not fall as you raise or remove it. Use a durable non-conductive rope secured at each two foot level as the mast is raised. Have an assistant tend the rope, ready to pull the mast clear of any hazards (such as power lines) should it begin to fall.
- Use the mounting bracket provided with the antenna.
- If the installation will use guy wires:
    - Install guy anchor bolts.
    - Estimate the length of guy wire and cut it before raising the mast.
    - Attach guy wires to a mast using guy rings.
    - In the case of a guyed (tall, thin mast) installation, you must have at least one assistant to hold the mast upright while the guy wires are attached and tightened to the anchor bolts.

- Attach a “DANGER” label at eye level on the mast.
- Install ground rods to remove any static electricity buildup and connect a ground wire to the mast and ground rod. Use ground rods designed for that purpose, not a spare piece of pipe.

Unused Antenna Ports

Port plugs must be installed in any unused antenna ports.

The weatherproof caps on the connectors protect the router interior from environmental elements including water, heat, cold, and dust. They are installed on unused ports before the router is shipped.

When you install a new antenna in a port with an N-connector:

- Chassis-mounted antennas—Remove the weather proof cap before installing a chassis-mounted antenna.
- External antennas—Remove weatherproof cap, then connect the supported Cisco cable to the connector.

Guidelines to Achieving Optimal RF and Antenna Performance

Antennas are a critical component of a wireless communication system. Selecting a suitable antenna, an optimal antenna location, or antenna site is essential for optimum performance of a wireless links.

This section covers general tips for optimizing RF performance of indoor and outdoor terrestrial radio systems in the 400-7125 MHz frequency range. Examples of terrestrial radio systems include 4G LTE, 5G NR, Wi-Fi, LoRa, LR-WPAN and similar. In this context GPS SPS would not be considered a terrestrial system as the signal is received from space, not from another terrestrial site.

Because the antenna transmits and receives radio signals over the air, overall RF performance of the link is susceptible to RF obstructions and common sources of RF interference that can reduce throughput and range of the system.

Follow these guidelines to optimize performance. When in doubt, consult a qualified RF professional, and check with your solution partner for specific recommendations.

Antenna Model Selection and Performance

Consider the following when planning your installation:

- When selecting the antenna, ensure that it covers the frequency ranges or frequency bands of interest, and that it has good RF parameters such as antenna efficiency, VSWR and suitable radiation pattern for every frequency range that your application will use with this antenna.
- Antenna pattern is important. Omni-directional antennas have lower gain, but allow communicating to devices in all azimuth directions. Directional antennas concentrate the beam in a specific direction, making them ideal for point to point communication.
- When a system has multiple RF ports for receive and / or transmit, as is the case for 4G LTE , 5G NR or Wi-Fi, it is highly recommended to populate all the RF ports with suitable antennas to take advantage of MIMO, rather than rely on a single port or single antenna to save on cost. Please see the MIMO section for a detailed description of MIMO benefits.
- For RF systems that support multiple RF ports and multiple RF standards such as LTE, Wi-Fi, and GPS: consider using a multi-element antenna that integrates multiple antennas under the same radome (cover).

Doing so may reduce cost compared to deploying and mounting a discrete single port antenna for every RF port.

- For communication between fixed infrastructure devices, such as mesh nodes or a point-to-point backhaul link, each device should have an antenna with the same polarization. If communicating with mobile devices that might be randomly oriented, consider dual-polarized antennas, such as those with both vertical and horizontal or slant +45° and -45° polarized elements.

Antenna Environmental Specifications

The selected antenna must have suitable mechanical and environmental specifications for the environment where it will be deployed. For example, shock and vibration specifications for transportation, corrosion resistant construction for marine and oil and gas industries, or IP (ingress protection) rating for outdoor deployment. Indoor antennas are typically not suitable for harsh industrial environments. Please check with your system integrator for environmental requirements for your application.

Antenna Accessories and Mounting

Consider the following when planning your installation:

- Carefully consider what type of other RF accessories, besides antenna, such as RF cables, lightning arrestors or RF adapters may be required in your installations. It is best to minimize long RF cable runs due to RF signal losses in the cable. Thinner RF cables have more RF loss , thicker cables are less flexible and more expensive.
- Carefully consider how the antenna will be physically mounted, as this may affect antenna selection. For example, a stud mount mechanical mounting design is a better fit for mounting on top of an electrical cabinet than a mast mount antenna.
- For outdoor deployments, follow installation instructions for the antenna. It is good practice to keep protective covers on the radio's RF ports and any antenna or accessory RF ports until the moment the interfaces are mated. This reduces chances of contamination, trapping water or condensation inside the connector, or accidental damage to RF interfaces.

MIMO Performance and Arrays

MIMO systems deliver benefits of higher SNR, higher reliability and higher throughput compared to single antenna systems. In more technical terms, MIMO delivers array gain, diversity gain and multiplexing gain compared to single antenna.

- Array gain — Improvement in SNR (signal to noise ratio) by coherently combining signals from multiple antennas. For example, increasing SNR through beamforming techniques.
- Diversity gain — Improvement in reliability by mitigating deep fading or strong destructive EM wave interference. For example, in a two-antenna system, if one antenna is experiencing deep fading due to an EM destructive null at its location at a given instant, the other antenna is unlikely to have a null at the same instant, and the combined SNR stays at a reliable level. In contrast, a single antenna would see SNR oscillating between good SNR and very poor SNR and reliability would degrade.
- Multiplexing gain — Increase in system capacity or throughput by sending independent data over multiple spatial streams simultaneously. The number of streams cannot be more than the number of antennas. For example, to support three spatial streams, a minimum of three antennas is required. Often there may be additional antennas for diversity or redundancy, such as in the case of 4x4:3, or 4x4 MIMO with 3 spatial streams.

If deploying multiple single-element antennas for a MIMO system in an array, ensure sufficient spacing between the antennas. Omnidirectional elements should generally be at least one wavelength apart at the lowest operating frequency.

Consider the following:

- For Wi-Fi systems operating in the 2.4, 5, and/or 6 GHz bands, space elements at least 5 inches (12.5 cm) apart.
- For 4G LTE and 5G systems with the lowest operating frequency of 617 MHz , space elements at least 20 inches (50 cm) apart.
- Note that spacing between elements inside multi-element MIMO antennas is often less than one wavelength. However multi-element antennas are engineered with MIMO performance in mind, by providing antenna diversity through pattern, polarization, and isolation between MIMO elements.

Antenna siting and location

Consider the following when planning your installation:

- Plan antenna location ahead of time. Ideal location for an antenna is in LOS (line of sight) of the counterpart that it is trying to communicate with. Under LOS conditions the signals propagate directly between the two communication nodes, without relying on signal bouncing off a wall or other structure to reach the counterpart. This is sometimes not possible to achieve in practice, but it is a useful goal to keep in mind when optimizing antenna location.
- While it is good to keep RF cables short, it is most desirable for an antenna to be in the best location it can be to provide the desired coverage.
- For large deployments involving multiple units communicating with each other across a complex urban or industrial landscape, consider running an RF propagation modeling study to predict approximate simulated coverage maps and determine initial placement of the units. A propagation study may help reduce overall deployment cost by discovering and mitigating issues with RF coverage before the infrastructure is physically installed.
- Keep the antenna away from metal obstructions such as heating and air-conditioning ducts, large ceiling trusses, building superstructures, and major power cabling runs. One exception is if the antenna is designed to be mounted on a ground plane. If mounting on a ground plane, mount the antenna on a flat metal surface away from adjacent obstructions.
- It is strongly recommended not to install antennas directly on the router or access point (AP), unless the router or AP is specifically engineered to directly mount the antennas. Products that are engineered for direct mounting of antennas specifically address each of the below issues.
- Reasons to mount antennas away from the router include:
    - Router location may not be optimal location for antenna to communicate with the counterpart wirelessly, so router and antenna may need to be in different locations.
    - Router may have a clutter of Ethernet cable and power cables around it, which will obstruct antenna signal.
    - A number of routers, such as the IR1835, are modular. They have plug-in RF modules for Wi-Fi , 4G LTE or 5G NR such as WP-WIFI6, P-LTEAP18-GL, P-5GS6-GL. These modules have RF connectors spaced close together, and while it is mechanically possible to install four or five antennas directly attached, this will result in significant degradation to RF performance of antennas due to

mutual de-tuning between closely spaced antennas. It is strongly recommended to install antennas away from the chassis in modular cases.

- If installing an antenna indoors, consider that the density and electromagnetic properties of the materials used in the building construction determines the number of walls the signal can pass through and still maintain adequate coverage.
  - Paper and vinyl walls have very little effect on signal penetration.
  - Solid and pre-cast concrete walls limit signal penetration to one or two walls without degrading coverage.
  - Concrete and wood block walls limit signal penetration to three or four walls.
  - A signal can penetrate five or six walls constructed of drywall or wood.
  - A thick metal wall causes signals to reflect off, causing poor penetration.
  - A chain link fence or wire mesh spaced between 1 and 1 1/2 in. (2.5 and 3.8 cm) acts as a harmonic reflector that blocks a 2.4-GHz radio signal.
  - Install the antenna away from microwave ovens and 2-GHz cordless phones. These products can cause signal interference because they operate in the same frequency range as the device your antenna is connected to.

Antenna Installation

The antenna installation includes the following procedures:

Tools and Equipment Required

In addition to the parts included in the antenna kit, you must provide the following tool to install the antenna on the router:

- A flathead screwdriver
- 3/4 in. open-end wrench
- LMR-400-DB RF coaxial cable with N (m) to N (m) connectors
- Coax seal

Note This list does not include the tools and equipment required to assemble and erect the tower, mast, or other structure you intend to mount your antenna on.

Installing the Antenna

Follow these instructions to install the antenna:

Step 1 Choose the mounting configuration that you prefer.

Note Your connector type, location and quantity might differ from what is shown. In the following figure, item 1 shows the drain hole locations.

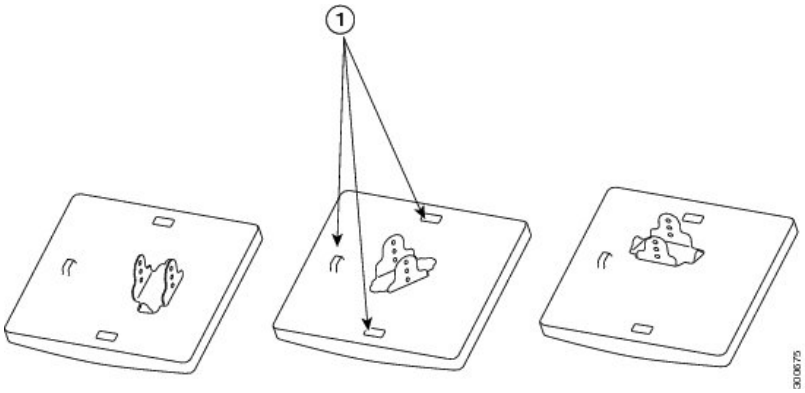

Step 2 Attach the antenna mount bracket to the back of the antenna by using two sets of flat washers, lock washers, and hex nuts. Tighten the nut to a torque rating of 55 in-lbf (6.2 Nm).

Figure 448: Antenna Detail

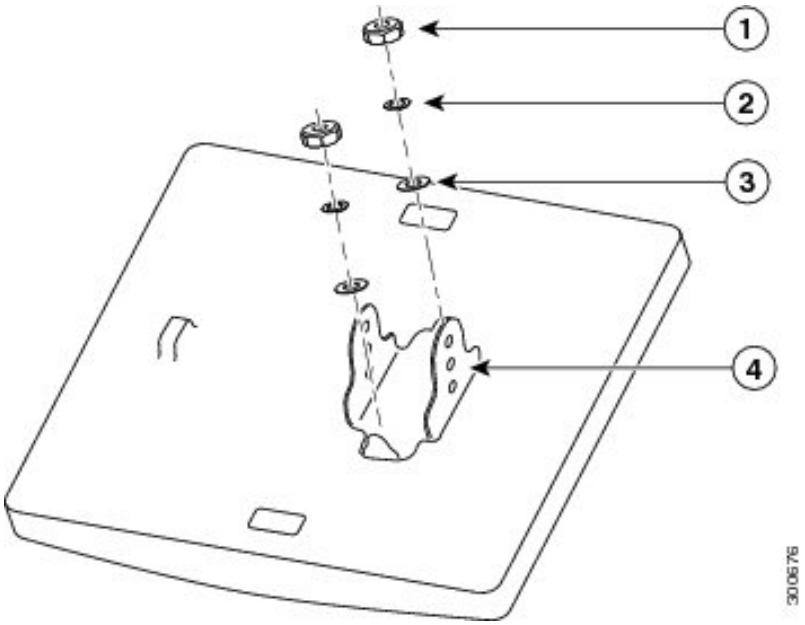

1	1/4”-20 hex nut
2	1/4”20 spring lock washer
3	1/4”-20 flat washer
4	Antenna mount bracket

Step 3 Attach the elevation adjustable bracket to the mount bracket using two sets of carriage bolts, washers, lock washers, and hex nuts. Position the bolts so the carriage bolt square holes are positioned on the inside. Do not tighten fully. Allow the bracket to move freely.

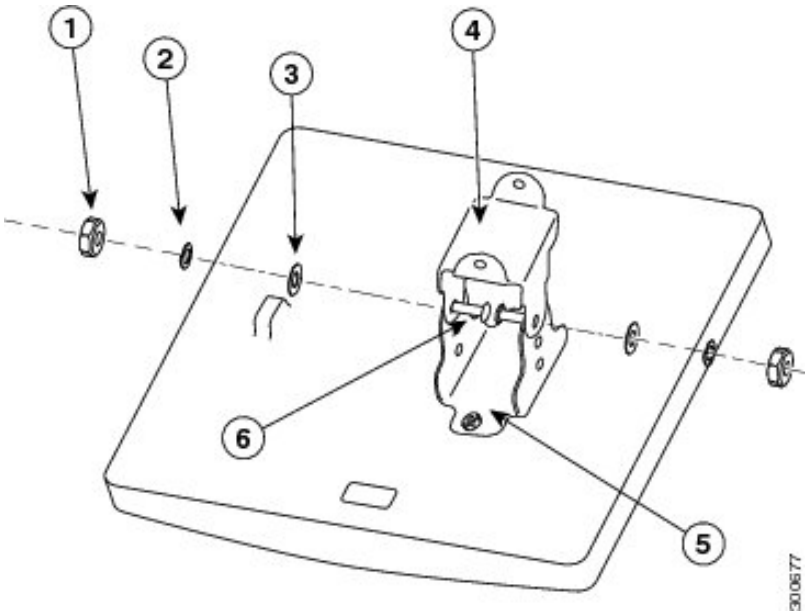

1	1/4”-20 hex nut
2	1/4”-20 spring lock washer
3	1/4”-20 flat washer
4	Elevation adjustable bracket
5	Antenna-mount bracket
6	1/4”-20x3/4 carriage bolt

Step 4 Position the azimuth adjustable (pipe) bracket to the pipe with the flanges away from the pipe. Secure each bracket to the pipe first by routing the band clamps around the pipe, then through the two holes. Tighten to a maximum torque rating.

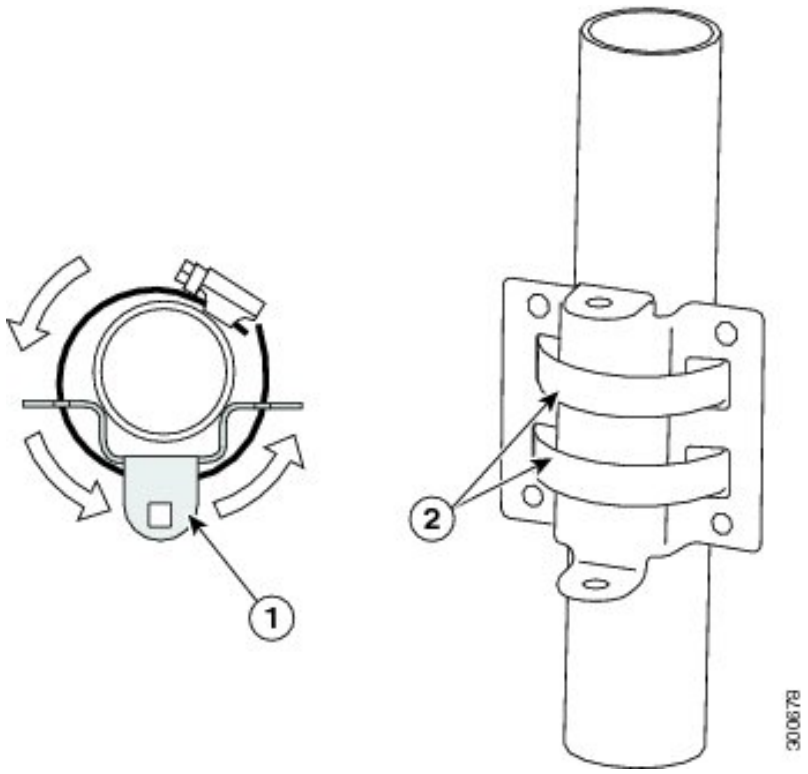

1	Azimuth adjustable bracket
2	Pipe clamps

Step 5 Attach the antenna assembly to the installed azimuth bracket. Position each of the two flanges on elevation adjustable bracket (on the antenna) over the flanges on the azimuth (pipe) bracket.

Figure 449: Attach Antenna

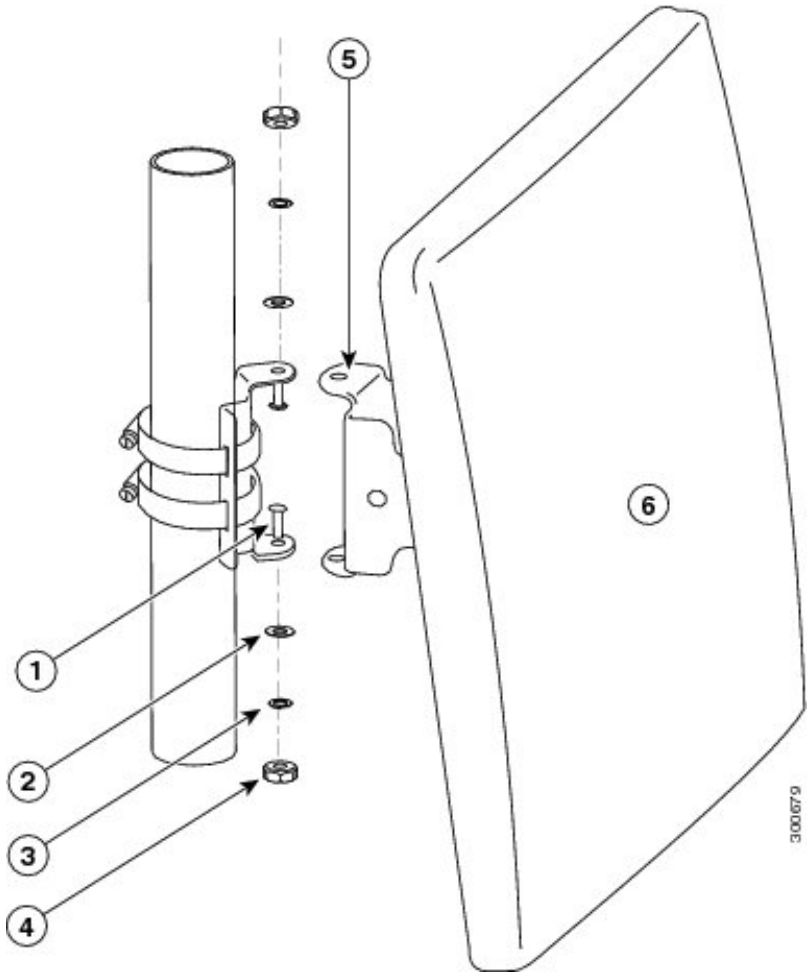

1	1/4”-20x3/4 carriage bolt
2	1/4”-20 spring lock washer
3	1/4”-20 flat washer
4	Elevation adjustable bracket
5	Elevation adjustable bracket
6	1/4”-20 hex nut

Step 6 Adjust to the desired azimuth and elevation angles. Tighten all nuts and bolts to a torque rating of 55 in-lbf.

Step 7 Attach the lightning arrestor to the router.

Step 8 Attach the two RF cables to the antenna by connecting the ends of the LMR-400 (male) cables to the two receptacles on the rear of the antenna panel.

Figure 450: Attach Cables

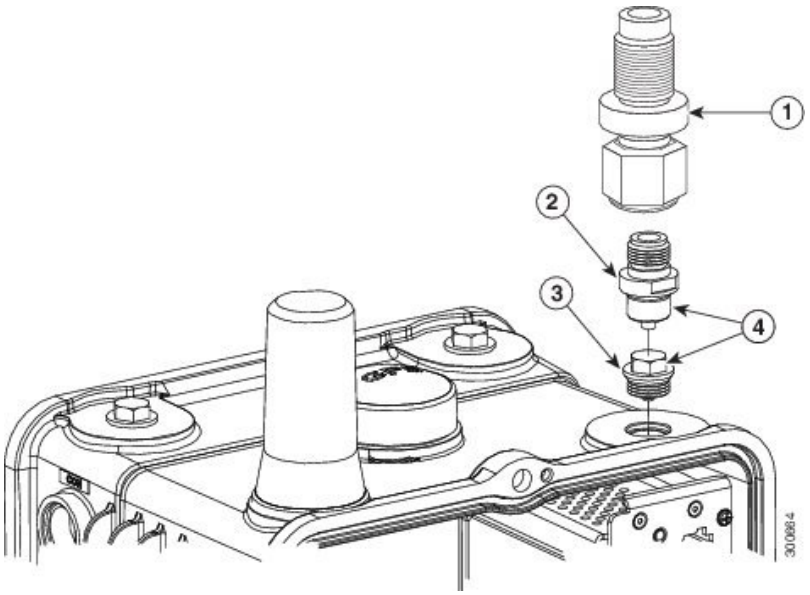

1	Lightning arrestor
2	N-connector: torque to 6 to 7 ft-lbs
3	Plug: torque to 6 to 7 ft-lbs
4	Ports must have either an antenna, connector, or plug installed.

Step 9 Seal the cable connections on the router and the back of the antenna by using weatherproof sealing tape (coax seal) at the connector junction. Start wrapping at the top of the antenna connector, wrap downward 3 times and end about 2 inches downward from the center of the connecter junction. Then wrap upwards another 3 times to reach the top of the antenna connector.

Step 10 Attach the router-end of the cable to your router.

Connecting the Antenna to the Router

To attach the router-end of the cable to your device, please refer to the appropriate Hardware Installation Procedures for the model of hardware you are installing.

Communications, Services, and Additional Information

- To receive timely, relevant information from Cisco, sign up at Cisco Profile Manager.
- To get the business impact you're looking for with the technologies that matter, visit Cisco Services.
- To submit a service request, visit Cisco Support.

- To discover and browse secure, validated enterprise-class apps, products, solutions, and services, visit Cisco DevNet.
- To obtain general networking, training, and certification titles, visit Cisco Press.
- To find warranty information for a specific product or product family, access Cisco Warranty Finder.

Cisco Bug Search Tool

Cisco Bug Search Tool (BST) is a web-based tool that acts as a gateway to the Cisco bug tracking system that maintains a comprehensive list of defects and vulnerabilities in Cisco products and software. BST provides you with detailed defect information about your products and software.

Documentation Feedback

To provide feedback about Cisco technical documentation, use the feedback form available in the right pane of every online document.

Cisco Support Community

Cisco Support Community is a forum for you to ask and answer questions, share suggestions, and collaborate with your peers. Join the forum at https://supportforums.cisco.com/index.jspa.