GeoVision inc
The Vision of Security

Quick Start Guide

GV-IP Camera



- GV-ABL / TBL Series
- GV-ADR / TDR Series
- GV-AVD / TVD Series
- GV-BLFC5800
- GV-EBD Series
- GV-EBFC5800
- GV-FER5702
- GV-PTZ5810-IR
- GV-TFD Series
- GV-TMS8800

Before attempting to connect or operate this product,
please read these instructions carefully and save this manual for future use.

UBN-QG-ZE

© **2024 GeoVision, Inc. All rights reserved.**
Under the copyright laws, this manual may not be copied, in whole or in part, without the written consent of GeoVision.

Every effort has been made to ensure that the information in this manual is accurate. GeoVision, Inc. makes no expressed or implied warranty of any kind and assumes no responsibility for errors or omissions. No liability is assumed for incidental or consequential damages arising from the use of the information or products contained herein. Features and specifications are subject to change without notice.

GeoVision, Inc.
9F, No. 246, Sec. 1, Neihu Rd.,
Neihu District, Taipei, Taiwan
Tel: +886-2-8797-8377
Fax: +886-2-8797-8335
http://www.geovision.com.tw

Trademarks used in this manual: *GeoVision*, the *GeoVision* logo and GV series products are trademarks of GeoVision, Inc. *Windows* is the registered trademark of Microsoft Corporation.

May 2024

Scan the following QR codes for product warranty and technical support policy:

[Warranty]

[Technical Support Policy]

Contents

Note for Connecting to GV-VMS / DVR / NVR iii
Note for Installing Camera Outdoor iii
Note for Powering the Camera iii
Note for Face Detection iv
Note for People Counting v
1. GV-EBD Series, GV-EBFC5800, GV-EBDP5800 1
1.1 Packing List 2
1.2 Overview 3
1.2.1 GV-EBD2702 / 2704 / 2705 / 4700 / 4701 / 4704 / 8700 / 8800 and GV-EBFC5800 3
1.2.2 GV-EBD4711 / 4712 / 4813 / 8711 / 8813, GV-EBDP5800 4
1.3 Installation 5
1.3.1 GV-EBD2702 / 2704 / 2705 / 4700 / 4701 / 4704 / 8700 / 8800 and GV-EBFC5800 Installation 5
1.3.2 GV-EBD4711 / 4712 / 4813 / 8711 / 8813 Installation 8
2. GV-ABL / TBL Series, GV-BLFC5800, GV-TBLP5800 11
2.1 Packing List 12
2.2 Overview 13
2.2.1 GV-ABL2701 / 2703 / 4701 / 4703 & TBL2703 / 2705 / 2706 / 4703 / 4705 / 8804 13
2.2.2 GV-ABL2702 / 4711 / 4712 / 8712, TBL4700 / 4710 / 4711 / 4807 / 4810 / 8710 / 8810, and BLFC5800 15
2.3 Installation 16
3. GV-ADR / TDR Series 20
3.1 Packing List 21
3.2 Overview 22
3.3 Installation 23
4. GV-AVD / TVD Series 26
4.1 Packing List 27
4.1.1 GV-TVD4711 / TVD4811 27
4.1.2 GV-AVD / TVD Series 28
4.2 Overview 29
4.2.1 GV-AVD2700 / 4710 / 8710, GV-TVD4700 / 4710 / 4810 / 8710 / 8810 29
4.2.2 GV-TVD4711 / TVD4811 30
4.3 Installation 32
4.3.1 GV-AVD2700 / 4710 / 8710, GV-TVD4700 / 4710 / 4810 / 8710 / 8810 32
4.3.2 GV-TVD4711 / TVD4811 34
5. GV-TFD Series 36
5.1 Packing List 36

5.1.1 GV-TFD4700 / 4800 36
5.2 Overview 37
5.2.1 GV-TFD4700 / 4800 37
5.3 Installation 38
5.3.1 GV-TFD4700 / 4800 38
6. GV-FER5702 39
6.1 Packing List 39
6.1.1 GV-FER5702 39
6.2 Overview 40
6.2.1 GV-FER5702 40
6.3 Installation 41
7. GV-PTZ5810-IR 43
7.1 Packing List 43
7.1.1 GV-PTZ5810-IR 43
7.2 Overview 44
7.2.1 GV-PTZ5810-IR 44
7.3 Installation 45
8. GV-TMS8800 47
8.1 Packing List 47
8.1.1 GV-TMS8800 47
8.2 Overview 48
8.2.1 GV-TMS8800 48
8.3 Installation 49
8.4 Optional Installation 51
9. Accessing the Camera 52
9.1 System Requirements 52
9.2 Looking Up the Dynamic IP Address 53
9.3 Configuring the IP Address 54
10. The Web Interface 55
11. Upgrading System Firmware 60
12. Restoring to Factory Default 61

Note for Connecting to GV-VMS / DVR / NVR

The GV-IPCAM is designed to work with and record on GV-VMS / DVR / NVR, a video management system.

- Once the camera is connected to the GV-VMS / DVR / NVR, the resolution set on the GV-VMS / DVR / NVR will override the resolution set on the camera's Web interface. You can only change the resolution settings through the Web interface when the connection to the GV-VMS / DVR / NVR is interrupted.
- The login password of the camera cannot contain the character "&" or any whitespace when connecting to GV-VMS.
- The Video Analytic features under Intelligent (See *3.6 Intelligent* in the *User's Manual*) cannot be integrated with GV-VMS / DVR / NVR

Note for Installing Camera Outdoor

When installing the camera outdoor, be sure that:

1. The camera is set up above the junction box to prevent water from entering the camera along the cables.

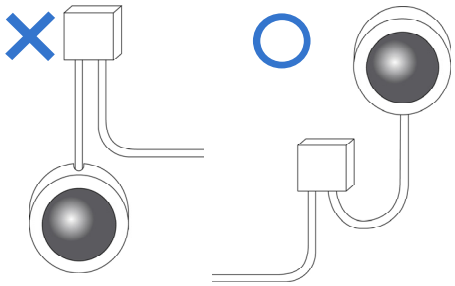

2. Any PoE, power, audio and I/O cables are waterproofed using waterproof silicon rubber or the like.

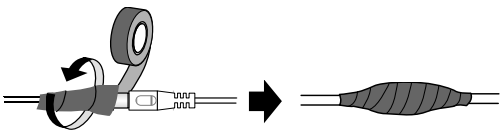

3. The screws are tightened and the cover is in place after opening the camera cover.

Note for Powering the Camera

The camera is powered by PoE. If you want to power the camera using the power connector, an optional power adapter is required.

Note for Face Detection

To use the camera's built-in face detection feature (see *3.6.1.7 Face Detection* in the *User's Manual*), which is only supported by certain models, it is recommended to install the camera according to the criteria listed below

Surveillance Condition

- The camera shall be installed at a site with uniform, sufficient lighting, where the face(s) to be detected are fully illuminated.

Example of Recommended Scene	Example of Non-recommended Scene
	

Camera Position

- The camera shall be mounted at a recommended height of 2.5 ~ 3 m (8.2 ~ 9.84 ft).
- The camera shall be mounted with a recommended depression angle of around 10°.
- The camera shall be positioned so that the face(s) to be detected are directly aligned with the lens of the camera, with a horizontal deviation of no greater than 30°, a vertical deviation of no greater than 15° and a face size of at least 120 pixels.

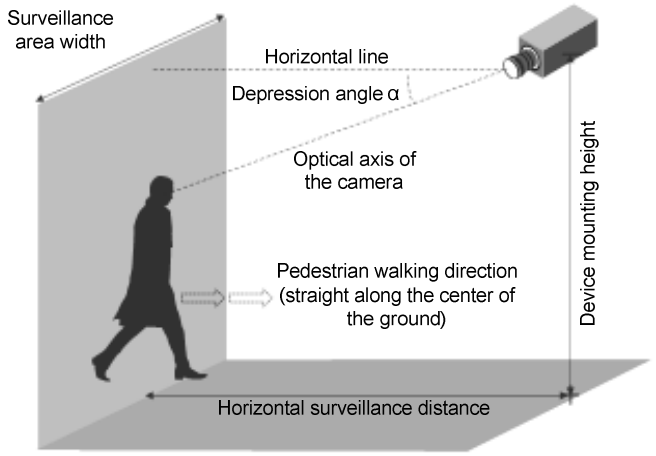

Note for People Counting

To use the camera's built-in people counting feature (see *3.6.1.8 People Counting* in the *User's Manual*), which is only supported by certain models, it is recommended to install the camera according to the criteria listed below:

Surveillance Condition

- The camera shall be installed at a site with uniform, sufficient lighting, where the person(s) to be counted are fully illuminated.
- The camera shall be installed at an entrance or exit with an ideal width of 1 ~ 4 m (3.28 ~ 13.12 ft), where the persons(s) to be counted move toward the lens of the camera in single file.

Example of Recommended Scene	Example of Non-recommended Scene
	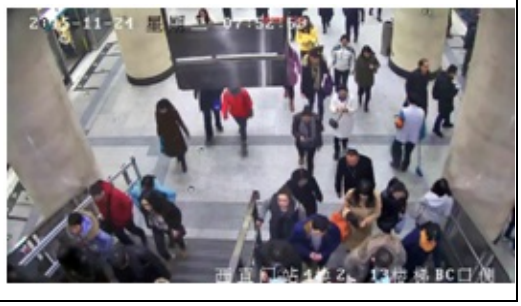

Camera Position

- The camera shall be mounted at a recommended height of 3 ~ 5 m (9.84 ~ 16.4 ft).
- The camera shall be mounted with a recommended depression angle of 70 ~ 80°.
- The camera shall be positioned so that the person(s) to be counted face toward the lens of the camera and are displayed on the image with a shoulder size of between 120 ~ 160 pixels.

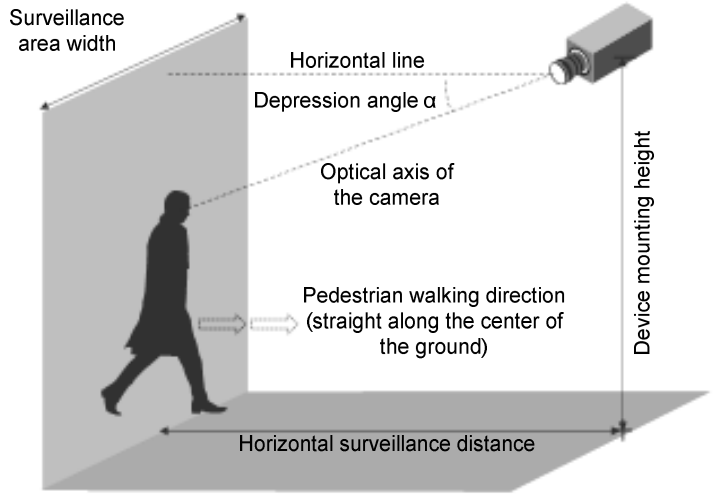

1. GV-EBD Series, GV-EBFC5800, GV-EBDP5800

Camera Type	Model No.
Eyeball IP Dome	GV-EBD2702 (IP67)
	GV-EBD2704 (IP67)
	GV-EBD2705 (IP67)
	GV-EBD4700 (IP67)
	GV-EBD4701 (IP67)
	GV-EBD4704 (IP67)
	GV-EBD4711 (IP67)
	GV-EBD4712 (IP67)
	GV-EBD4813 (IP67)
	GV-EBD8700 (IP67)
	GV-EBD8711 (IP67)
	GV-EBD8800 (IP67)
	GV-EBD8813 (IP67)
	GV-EBDP5800 (IP67)
	GV-EBFC5800 (IP67)

1.1 Packing List

The packing list varies depending on the model. Product details can be found on the datasheet.

- Eyeball Dome
- Screw Kit



- Drill Template Paster



- Waterproof Rubber Set



- Download Guide
- Torx Wrench (not available for all models)

1.2 Overview

1.2.1 GV-EBD2702 / 2704 / 2705 / 4700 / 4701 / 4704 / 8700 / 8800 and GV-EBFC5800



No.	Description
1	Bottom ring
2	Housing
3	Lens
4	Infrared indicator / Warm LEDs (GV-EBFC5800 only)
5	Power connector (DC 12 V)
6	Ethernet connector / PoE
7	Micro SD card slot (GV-EBD2704 / 4701 / 4704 / 8800 and GV-EBFC5800 only)
8	Microphone (GV-EBD2704 / 4701 / 4704 / 8800 and GV-EBFC5800 only)

1.2.2 GV-EBD4711 / 4712 / 4813 / 8711 / 8813, GV-EBDP5800

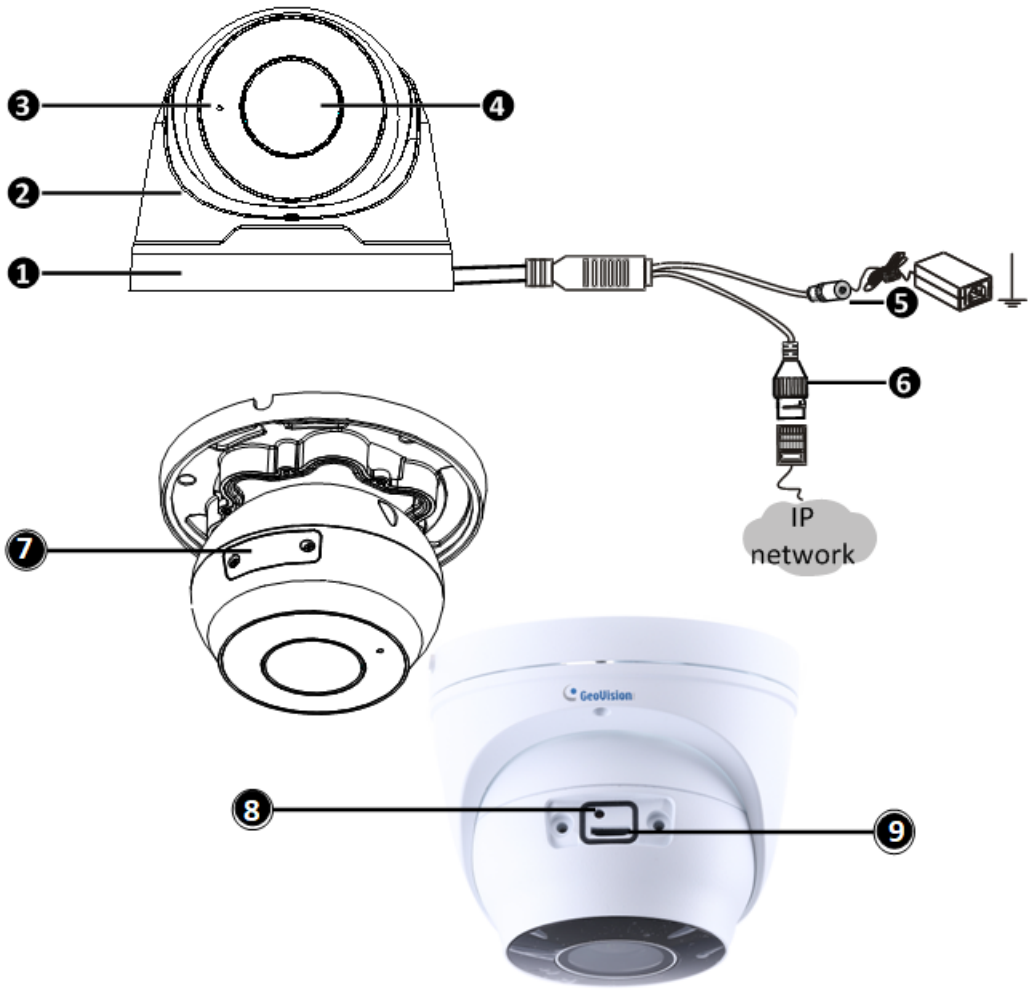

No.	Description
1	Bottom ring
2	Housing
3	Microphone
4	Lens
5	Power connector (DC 12 V)
6	Ethernet connector / PoE
7	Micro SD card slot and default button compartment
8	Default button
9	Micro SD card slot

Note: If the default button doesn't respond after pressing for 15 seconds, reboot the camera and try again within 10 minutes of rebooting.

1.3 Installation

The Target Eyeball Dome is designed for outdoors. With the standard package, you can install the camera on the ceiling. Or you can purchase optional mounting accessories to mount the dome on a wall.

Below are the instructions for **Ceiling Mount**. There are two kinds of Ceiling Mount: **Concealed Installation** and **Open Installation**. In Concealed Installation, the cables are hidden in the ceiling. In Open Installation, the cables are led out from the open slot on the bottom ring.

1.3.1 GV-EBD2702 / 2704 / 2705 / 4700 / 4701 / 4704 / 8700 / 8800 and GV-EBFC5800 Installation

For Concealed Installation

1. Stick the drill template paster to the ceiling and drill three holes according to the drill template.

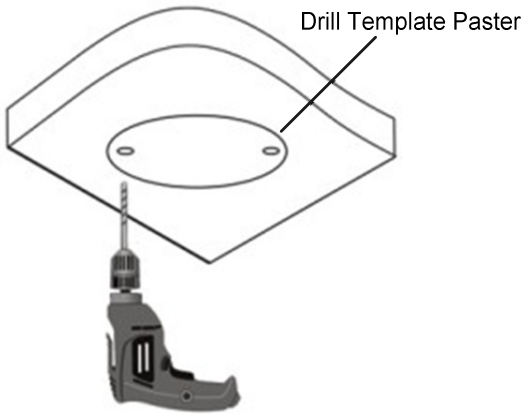

2. Insert the screw anchors.

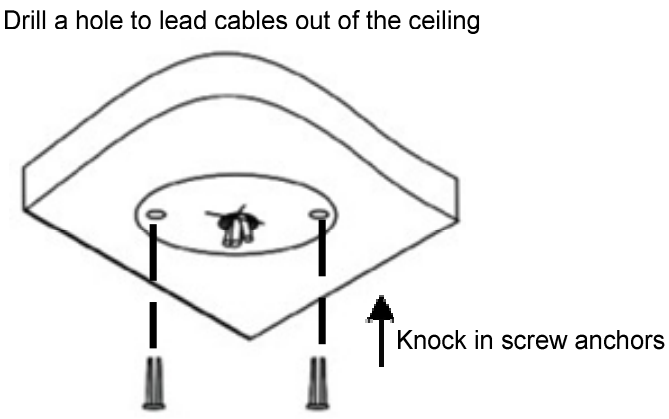

3. Remove the bottom ring by turning it anticlockwise.

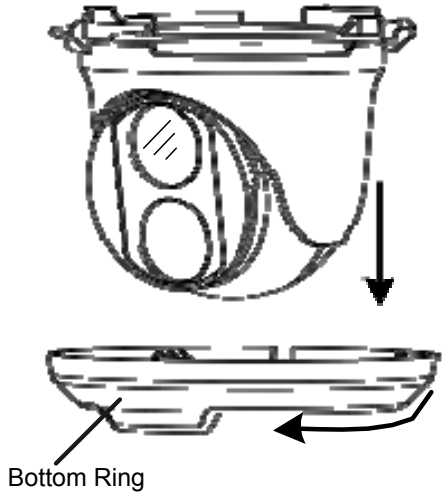

4. Connect the cables and secure the camera.

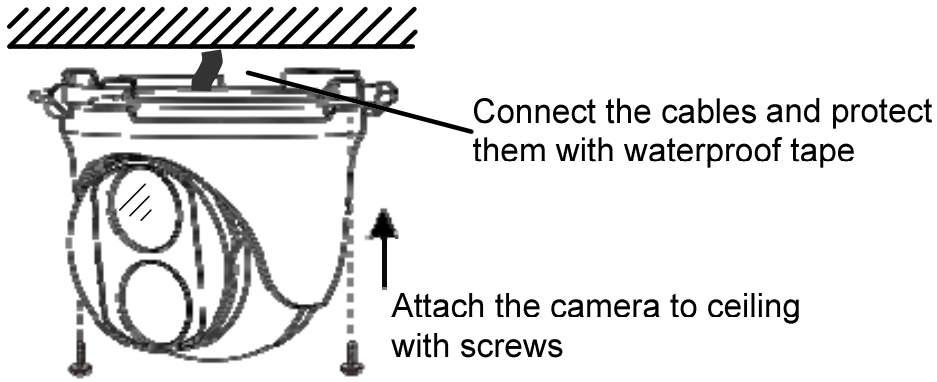

5. Adjust the monitoring direction.

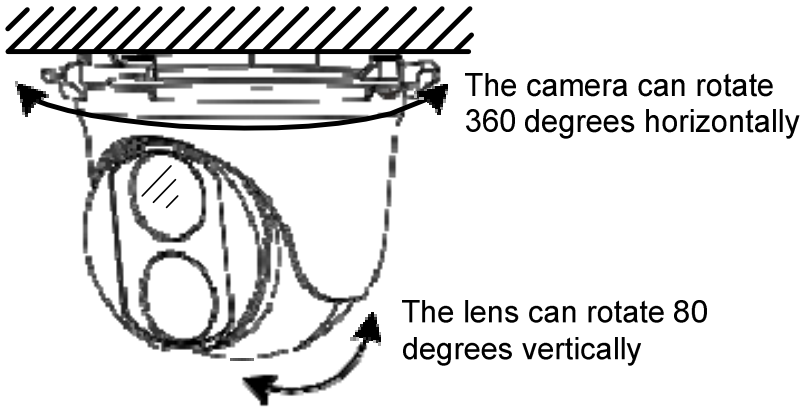

6. Mount the bottom ring.

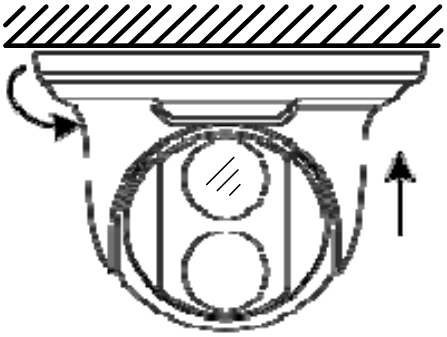

Push the bottom ring back up and turn it clockwise to lock into position

For Open Installation

Lead the cables out from the open slot on the bottom ring before screwing the camera to the ceiling as shown in step 4 of Conceal Installation.

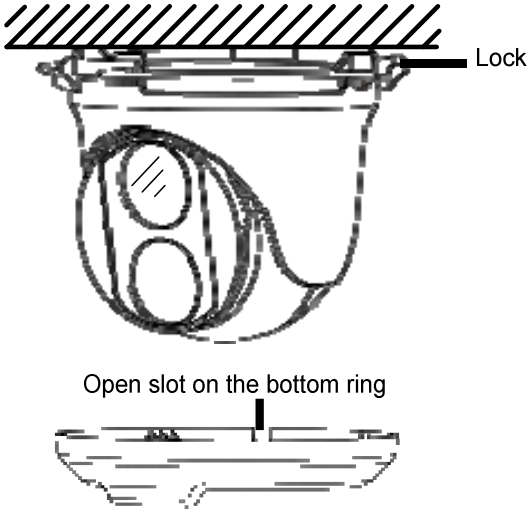

Note: To adjust the monitoring direction at *Step 5*, loosen the screw indicated at the Lock position as shown in the figure above. Tighten it when the adjustment is completed.

1.3.2 GV-EBD4711 / 4712 / 4813 / 8711 / 8813 Installation

For Concealed Installation

1. Stick the drill template paster to the ceiling and drill three holes according to the drill template.

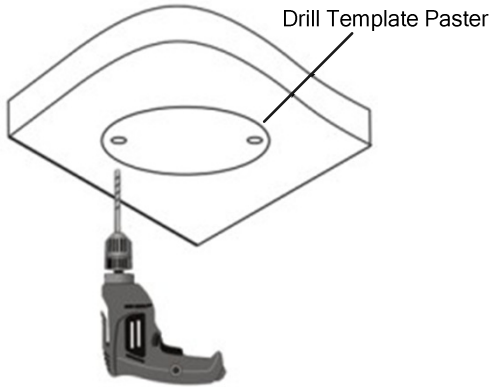

2. Insert the screw anchors.

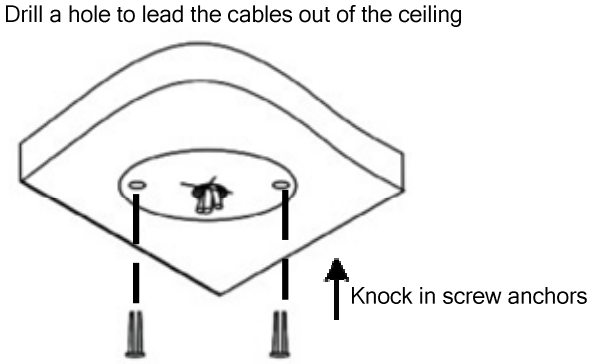

3. Loosen the fixing screw and remove the housing by turning it to the position as shown.

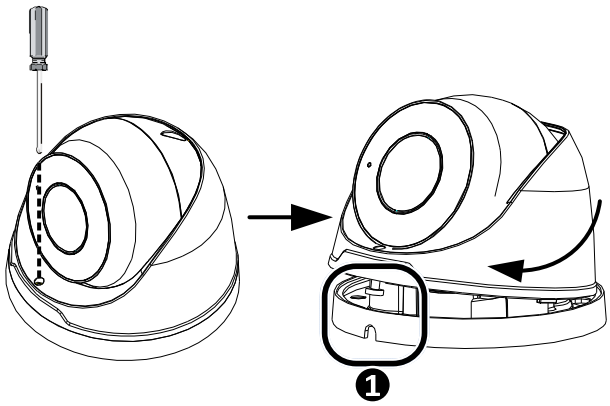

4. Secure the bottom ring to the ceiling with 3 supplied screws and connect the cable.

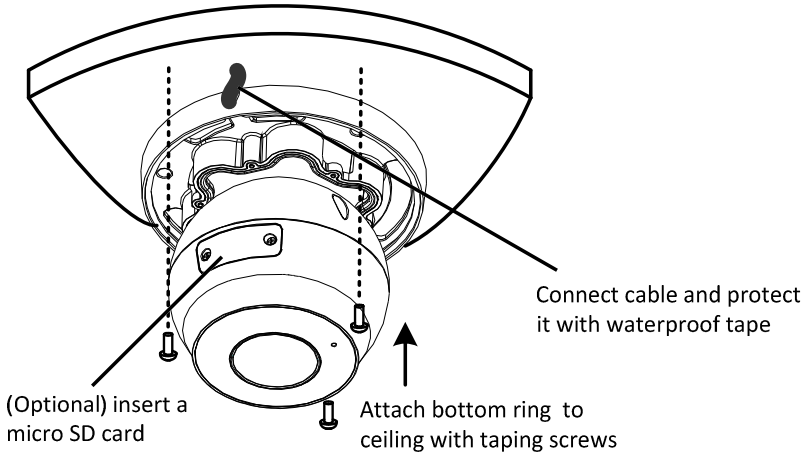

5. Mount the housing by adjusting to the position as shown and press and turn to anywhere but ❶.

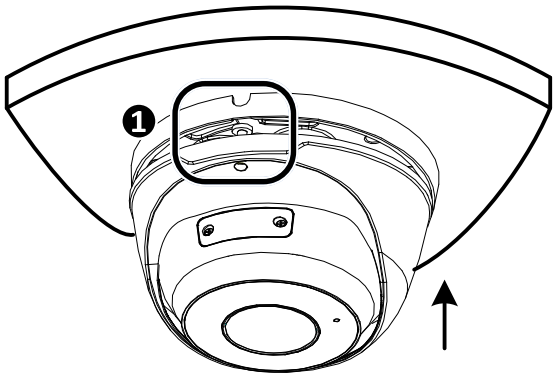

6. Adjust the monitoring direction. Then tighten the screw.

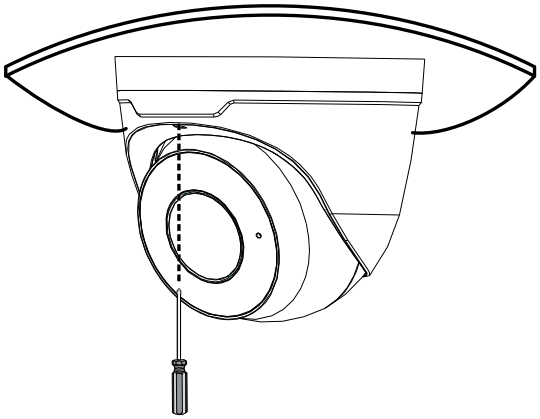

For Open Installation

Lead the cables out from the open slot on the bottom ring before screwing the camera to the ceiling as shown in step 5 of Concealed Installation.

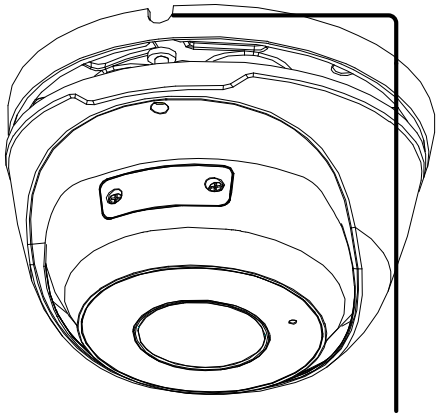

Open slot on the bottom ring

Note: You can optionally purchase GV-Mount211 or GV-Mount212 for Wall Bracket Mount. For details, see its *User's Manual*.

2. GV-ABL / TBL Series, GV-BLFC5800, GV-TBLP5800

Camera Type	Model No.
Bullet IP Camera	GV-ABL2701 Series (IP66)
	GV-ABL2702 (IP67 + IK10)
	GV-ABL2703 Series (IP67)
	GV-ABL4701 Series (IP66)
	GV-ABL4703 (IP67)
	GV-ABL4711 (IP67 + IK10)
	GV-ABL4712 (IP67)
	GV-ABL8712 (IP67 + IK10)
	GV-TBL2703 Series (IP67)
	GV-TBL2705 (IP67)
	GV-TBL2706 Series (IP67)
	GV-TBL4700 (IP67 + IK10)
	GV-TBL4703 (IP67)
	GV-TBL4705 (IP67)
	GV-TBL4710 (IP67 + IK10)
	GV-TBL4711 (IP67 + IK10)
	GV-TBL4810 (IP67 + IK10)
	GV-TBL8710 (IP67 + IK10)
	GV-TBL8804 (IP67 + IK10)
	GV-TBL8810 (IP67 + IK10)
	GV-TBLP5800 (IP67)
	GV-BLFC5800 (IP67 + IK10)

2.1 Packing List

The packing list varies depending on the model. Product details can be found on the datasheet.

- Bullet IP Camera
- Waterproof Rubber Set



- Screw Kit



- Drill Template Paster

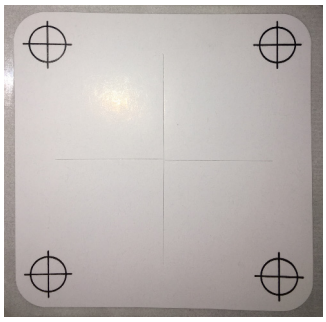

- Download Guide
- Torx Wrench (not available for all models)

2.2 Overview

2.2.1 GV-ABL2701 / 2703 / 4701 / 4703 & TBL2703 / 2705 / 2706 / 4703 / 4705 / 8804

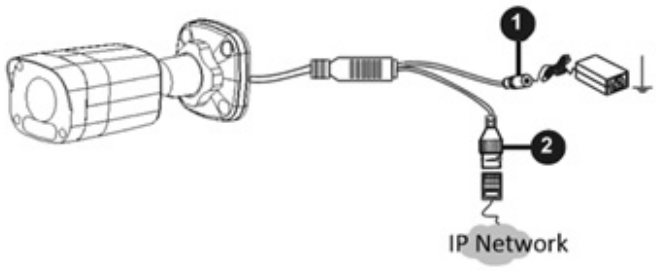

No.	Description
1	Power connector (DC 12 V)
2	Ethernet connector / PoE

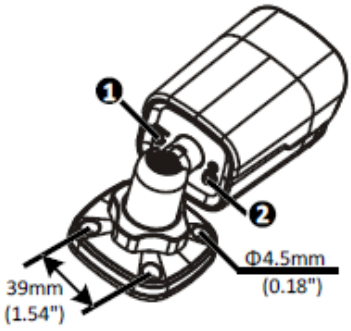

No.	Description	No.	Description
1	Load Default button	2	Grounding screw (**GV-TBL8804**)

Note: The Load Default button is for GV-ABL2703 / 4703 & GV-TBL2703 / 4703 / 8804 only.

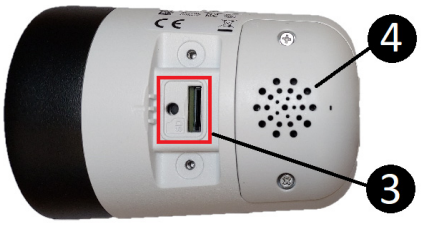		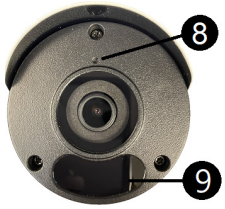
	GV-TBL8804	**GV-TBL2705 / 2706 / 4705**
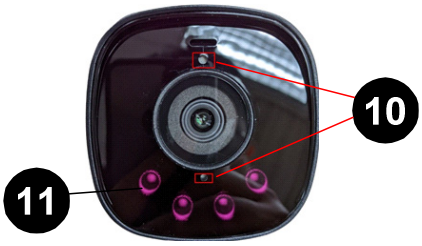	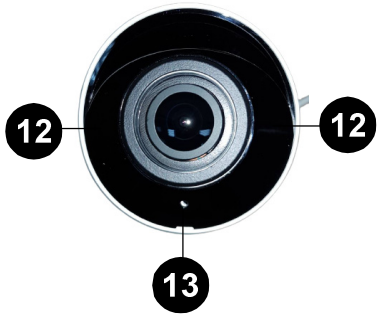	
GV-TBL4807	**GV-TBLP5800**	

No.	Description	No.	Description
3	● Load default button / SD card slot (**GV-TBL4807 / 8804, GV-TBLP5800**) ● SD card slot (**GV-TBL2705 / 2706 / 4705 / 4807 / 8804, GV-TBLP5800**)	9	IR LED x 2 (**GV-TBL2705 / 4705**) IR LED x 1 (**GV-TBL2706**)
4	Built-in speaker (**GV-TBL8804**)	10	Built-in microphone x 2 (**GV-TBL4807**)
5	Built-in microphone (**GV-TBL8804**)	11	IR LED x 4 (**GV-TBL4807**)
6	Warm LED x 2 (**GV-TBL8804**)	12	IR LED x 2 (**GV-TBLP5800**) Built-in microphone (**GV-TBLP5800**)
7	IR LED (**GV-TBL8804**)	13	Built-in microphone (**GV-TBLP5800**)
8	Built-in microphone (**GV-TBL2705 / 2706 / 4705**)		

Note:

1. For safety precautions, it is recommended to connect a grounding wire to the grounding screw, and do not loosen or remove the grounding screw under any circumstances.
2. The Load default button is only available in the following models: GV-ABL2703 / 4703, TBL2703 / 4703 / 8804, and GV-TBLP5800.
3. If the default button doesn't respond after pressing for 15 seconds, reboot the camera and try again within 10 minutes of rebooting.

2.2.2 GV-ABL2702 / 4711 / 4712 / 8712, TBL4700 / 4710 / 4711 / 4807 / 4810 / 8710 / 8810, and BLFC5800

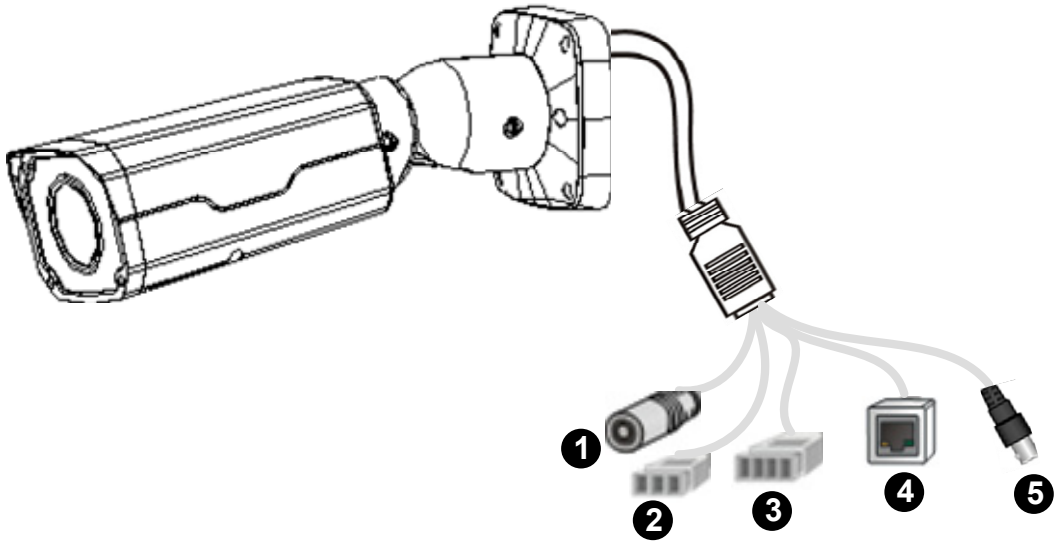

No.	Description
1	Power connector (DC 12 V)
2	Audio input / output / GND
3	Alarm input (IN, GND) / output (N, P)
4	Ethernet connector / PoE
5	Video Output (**GV-ABL8712 / TBL8710** Only)

Note: GV-TBL4807 does not have the terminal blocks for audio input / output (No. 2) and alarm input / output (No. 3). Instead, it features 4 wires for connecting alarm input and output devices.

2.3 Installation

The Bullet IP Camera is designed for outdoors. With the standard package, you can install the camera on the wall or ceiling. Or, you can purchase optional mounting accessories to mount your camera on a wall.

Below are the instructions for **Wall Mount**. There are two kinds of Wall Mount: **Concealed Installation** and **Open Installation**. In Concealed Installation, the cables are hidden in the wall. In Open Installation, the cables are led out from the open slot on the base.

For Concealed Installation

Note that the following camera illustrations may differ between models.

1. Optionally loosen the two screws at the bottom of the camera to insert a SD card.

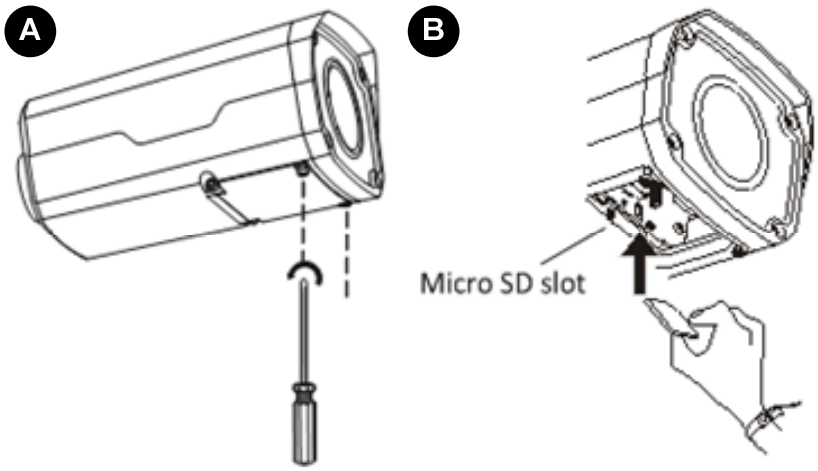

2. Stick the drill template paster to the wall and align the cross center to the hole in the wall.

3. Lead the cables across the hole on the wall.

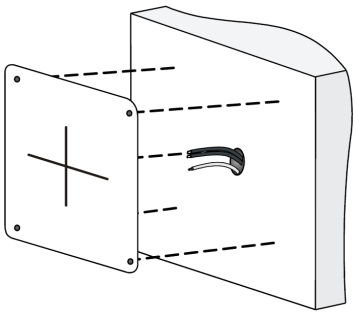

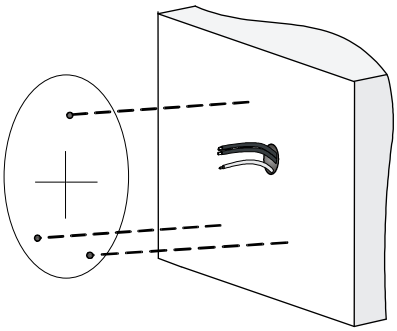

4. Drill the holes according to the drill template.

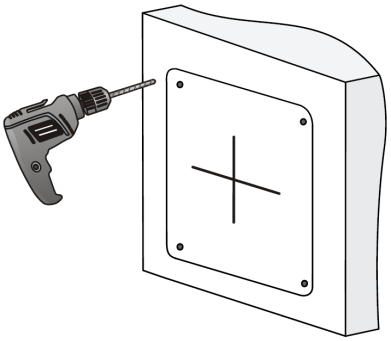

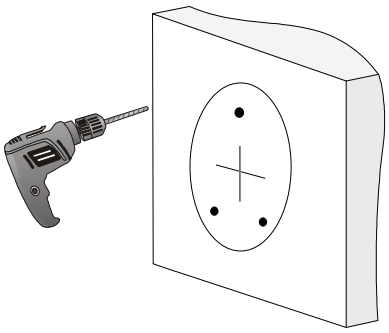

5. Insert the screw anchors.

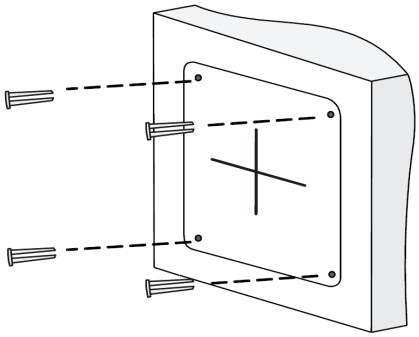

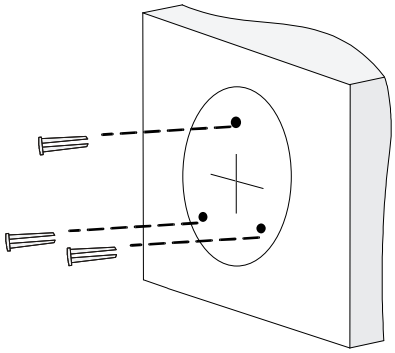

6. Screw the locknut and loosen the universal joint before attaching the camera to the wall.

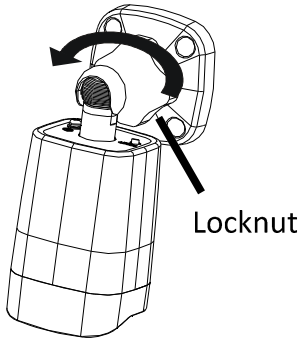

7. Secure the camera to the wall and connect all cables.

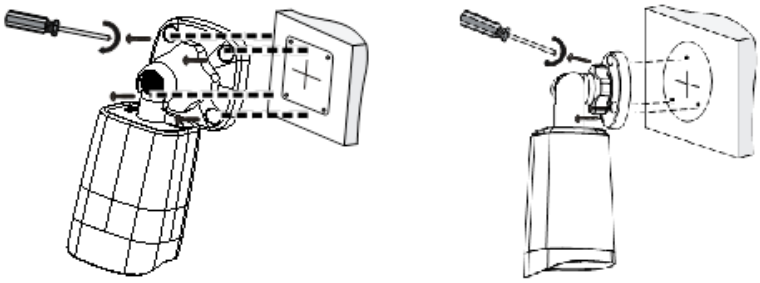

Lead tapping screws through the guide holes in the base and fix them on the wall by using a screwdriver.

8. To adjust the monitoring direction:
GV-ABL2702 / 4711 / 4712 / 8712, **TBL2705 / 2706 / 4700 / 4705 / 4710 / 4711 / 4807 / 4810 / 8710 / 8804 / 8810,** and **BLFC5800**

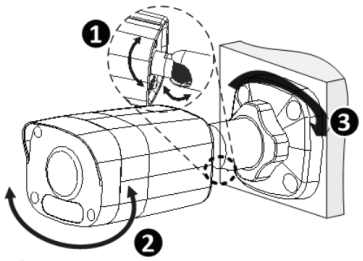

❶ Adjust the opening of the universal joints as required.
❷ Rotate the spherical hinge of the camera to get the desired monitoring direction.
❸ Tighten the locknut.

GV-TBL8804 and GV-TBLP5800



1. Loosen the screw to rotate the camera.
2. Loosen the screw to move the camera upward or downward.
3. Loosen the locknut to rotate the camera.

For Open Installation

Lead the cables out from the open slot on the base before screwing the camera to the wall as shown in step 6 in *For Concealed Installation*.

3. GV-ADR / TDR Series

Camera Type	Model No.
Mini Fixed Rugged IP Dome	GV-ADR2701 (IP66)
	GV-ADR2702 (IP67 + IK10)
	GV-ADR4701 (IP66 + IK10)
	GV-ADR4702 (IP67 + IK10)
	GV-TDR2700 Series (IP67 + IK10)
	GV-TDR2702 (IP67 + IK10)
	GV-TDR2704 Series (IP67 + IK10)
	GV-TDR2705 (IP67 + IK10)
	GV-TDR4700 Series (IP67 + IK10)
	GV-TDR4702 (IP67 + IK10)
	GV-TDR4703 (IP67 + IK10)
	GV-TDR4704 (IP67 + IK10)
	GV-TDR4803 (IP67 + IK10)
	GV-TDR8805 (IP67 + IK10)

3.1 Packing List

- IR Mini Fixed Rugged IP Dome
- Waterproof Rubber Set



- Screw Kit



- Drill Template Paster
- Download Guide
- Torx wrench (comes with some models)



3.2 Overview

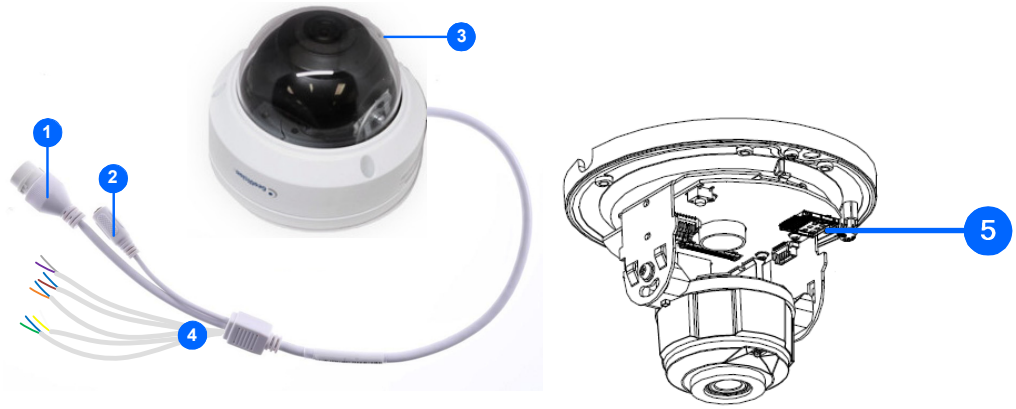

No.	Description
1	Ethernet connector / PoE
2	Power connector (DC 12 V)
3	Transparent Dome Cover
4	For GV-TDR2700 / 4700 / 4703 series / GV-TDR8805 only, see the table below.
5	Micro SD card slot

Wire Definition

GV-TDR2700 series / 4700 series		GV-TDR4703 series / 4803 series / GV-TDR8805	
Wire	**Definition**	**Wire**	**Definition**
Green	Audio In	Gray	Audio Out
Blue	GND	Purple	GND
Yellow	Alarm Out	Green	Audio In
White	Alarm Out	Brown	GND
Orange	Alarm Input	Orange	Alarm Input
Blue	GND	Blue	GND
Brown	Audio In	Yellow	Alarm Output
Blue	GND	White	Alarm Output
Gray	Audio Out		
Purple	GND		

3.3 Installation

The IR Mini Fixed Rugged IP Dome is designed for outdoors. With the standard package, you can install the camera on the ceiling.

Below are the instructions for **Ceiling Mount**. There are two kinds of Ceiling Mount: **Concealed Installation** and **Open Installation**. In Concealed Installation, the cables are hidden in the ceiling. In Open Installation, the cables are led out from the open slot on the camera base.

For Concealed Installation

1. Stick the drill template paster to the ceiling and drill 30-mm deep holes according to the drill template.

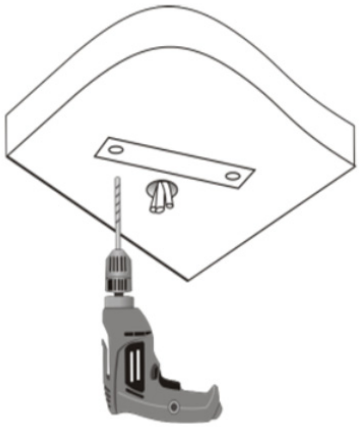

2. Insert the screw anchors.

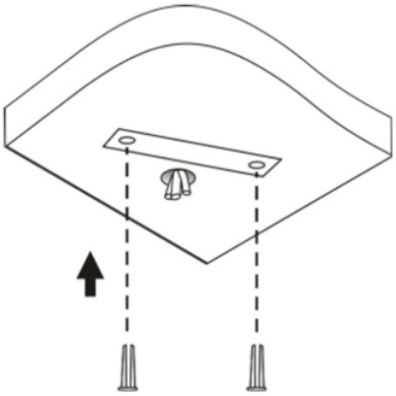

3. Unscrew the transparent dome cover with the supplied torx wrench.
4. Connect the cables and secure the camera.

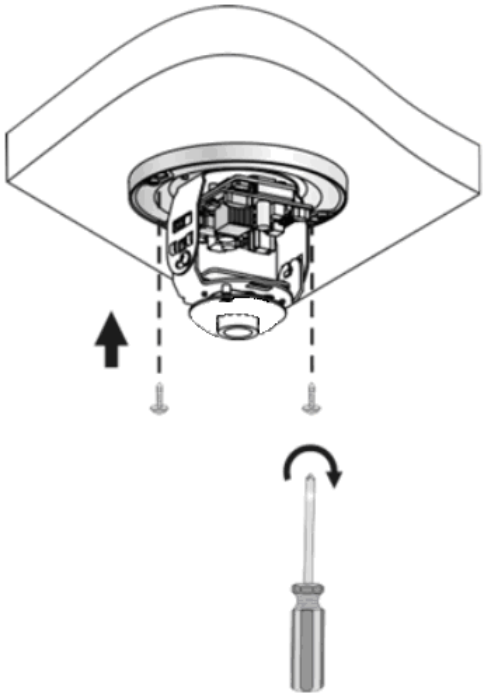

5. Adjust the monitoring direction and tighten the screws after vertically adjusting the lens.

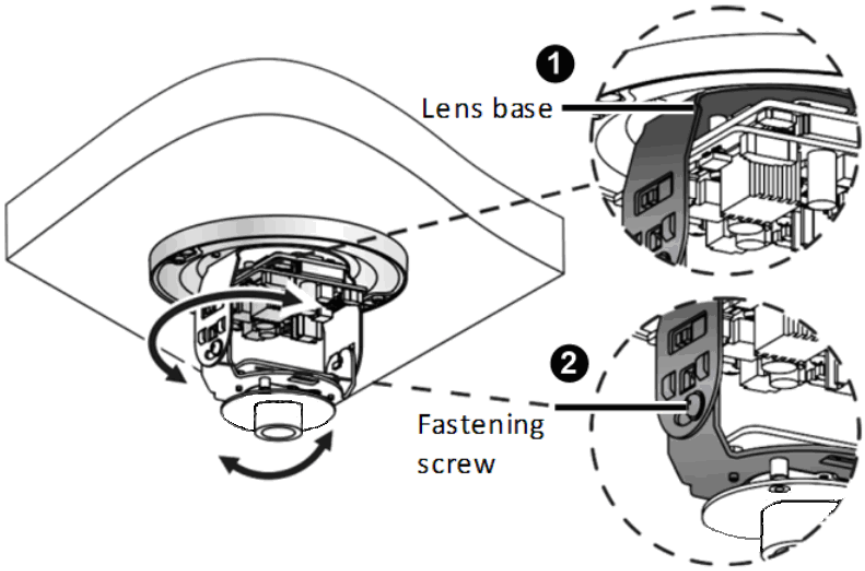

6. Secure the transparent dome cover with the supplied torx wrench.

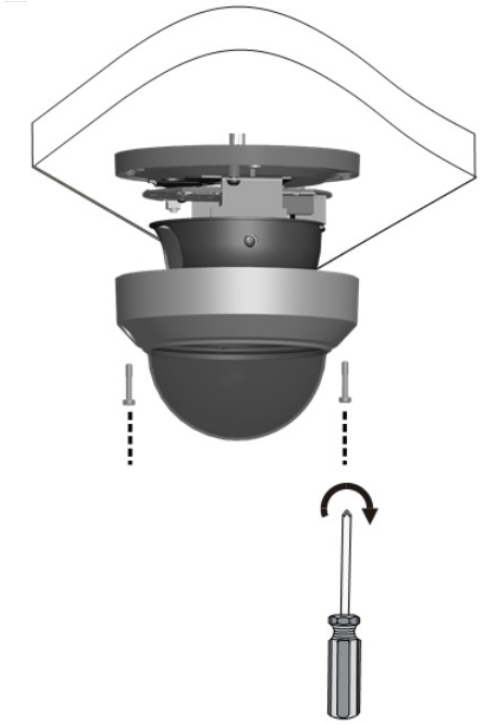

Note: Before securing the transparent dome cover, make sure the waterproof rubber strip is tightly held by the six retainers on the bottom ring.

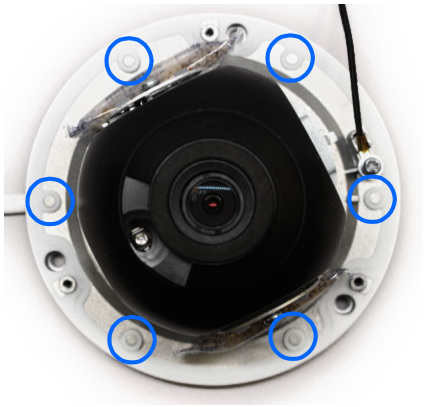

For Open Installation

Lead the cables out from the open slot on the camera base before screwing the camera to the ceiling as shown in step 4 in *For Concealed Installation*.

4. GV-AVD / TVD Series

Camera Name	Model No.
Vandal Proof IP Dome	GV-AVD2700 (IP67 + IK10)
	GV-AVD4710 (IP67 + IK10)
	GV-AVD8710 (IP67 + IK10)
	GV-TVD4700 (IP67 + IK10)
	GV-TVD4710 (IP67 + IK10)
	GV-TVD4711 (IP66 + IK10)
	GV-TVD4810 (IP67 + IK10)
	GV-TVD4811 (IP66 + IK10)
	GV-TVD8710 (IP67 + IK10)
	GV-TVD8810 (IP67 + IK10)

4.1 Packing List

4.1.1 GV-TVD4711 / TVD4811

- IR Vandal Proof IP Dome
- Screw Kit



- Drill Template Paster

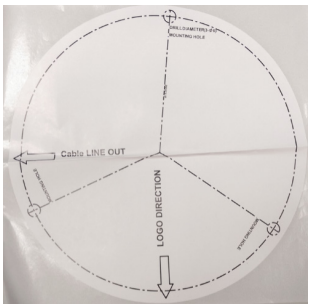

- Torx Wrench



- Spare Waterproof Rubber Plug

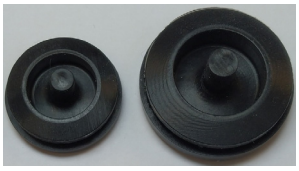

- Cable Protection Connector

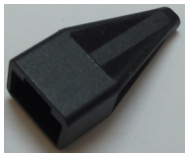

- 2-Pin Power Terminal Block



- Download Guide

4.1.2 GV-AVD / TVD Series

- IR Vandal Proof IP Dome

- Waterproof Rubber Set



- Screw Kit



- Drill Template Paster

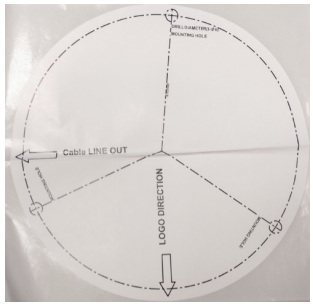

- Torx Wrench



- Download Guide

4.2 Overview

4.2.1 GV-AVD2700 / 4710 / 8710, GV-TVD4700 / 4710 / 4810 / 8710 / 8810

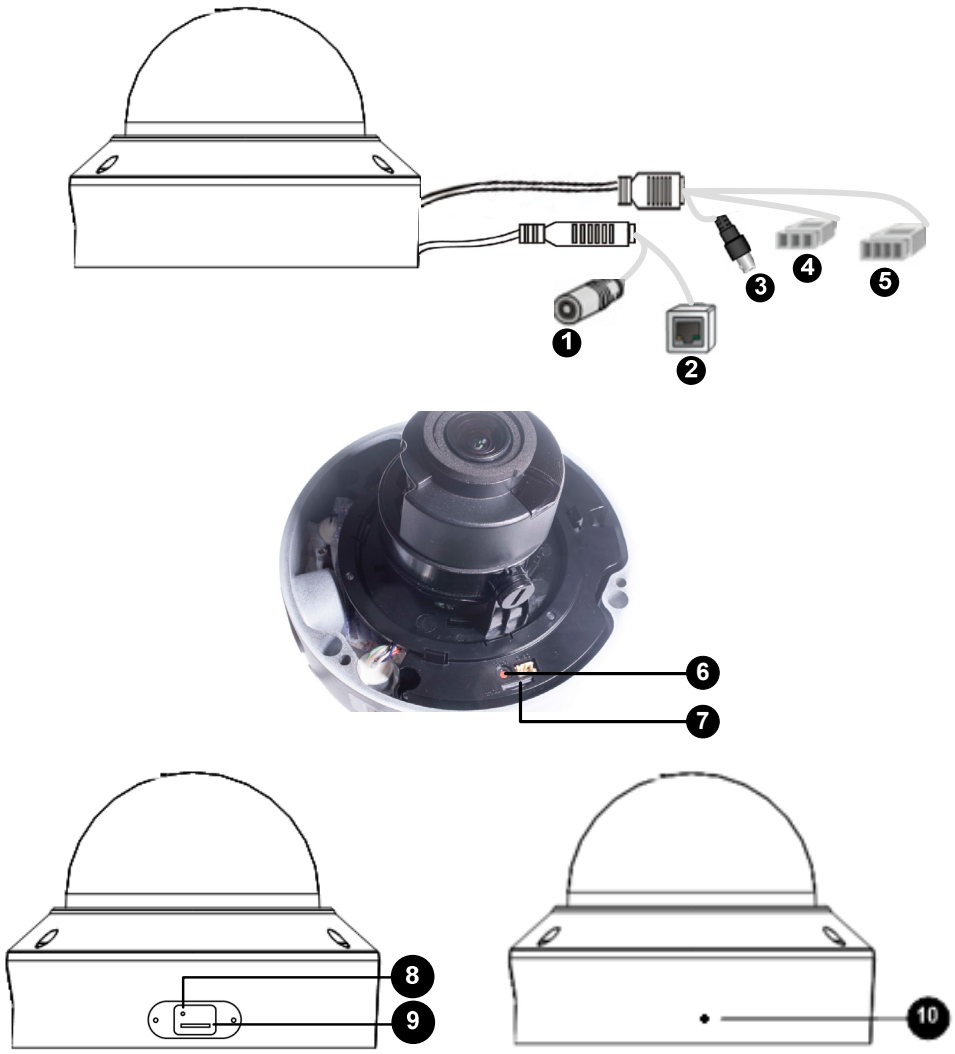

No.	Description	No.	Description
1	Power connector (DC 12 V)	6	Default button
2	Ethernet connector / PoE	7	Micro SD card slot
3	Video output (Not applicable to **GV-TVD4700 / 8810**)	8	Default button (For **GV-TVD4810 / 8810**)
4	Audio input / Audio output / GND (Not applicable to **GV-TVD4700**)	9	Micro SD card slot (For **GV-TVD8810**)
5	Alarm input (IN, GND) / Alarm output (N, P) (Not applicable to **GV-TVD4700**)	10	Built-in microphone (For **GV-TVD4810 / 8810**)

Note: If the default button doesn't respond after pressing for 15 seconds, reboot the camera and try again within 10 minutes of rebooting.

4.2.2 GV-TVD4711 / TVD4811

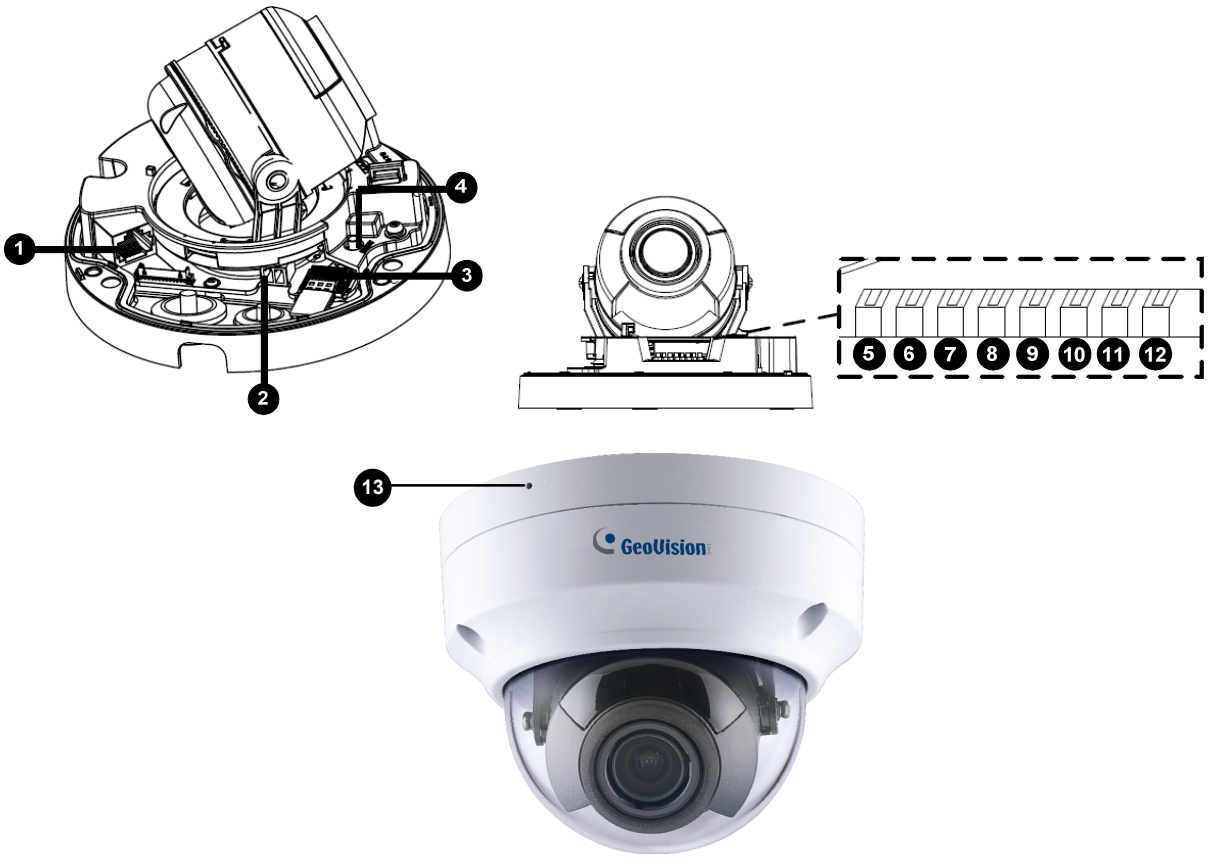

No.	Description	No.	Description
1	Ethernet port	8	Digital Input
2	Power port (2-Pin terminal block)	9	GND
3	Micro SD card slot	10	Audio In
4	Default button	11	GND
5	Digital Output (N)	12	Audio Out
6	Digital Output (P)	13	Microphone (**GV-TVD4811** only)
7	GND		

Note: There are two ways to supply power to the camera:

- Use a Power over Ethernet (PoE) adapter to connect the camera to the network, and the power will be provided at the same time.
- Plug the power adapter to the supplied 2-pin terminal block by inserting the striped wire to the right pin (-) and the black wire to the left pin (+), then insert the 2-pin terminal block to *Power Connector, No. 2*.



4.3 Installation

The Target Vandal Proof Dome is designed for outdoors. With the standard package, you can install the camera on the ceiling. Alternatively, you can purchase optional mounting accessories to mount the camera on a wall.

Below are the instructions for **Ceiling Mount**. There are two kinds of Ceiling Mount: **Concealed Installation** and **Open Installation**. In Concealed Installation, the cables are hidden in the ceiling. In Open Installation, the cables are led out from the open slot on the camera base.

4.3.1 GV-AVD2700 / 4710 / 8710, GV-TVD4700 / 4710 / 4810 / 8710 / 8810

For Concealed Installation

1. Stick the drill template paster to the ceiling, and then drill three holes according to the drill template.

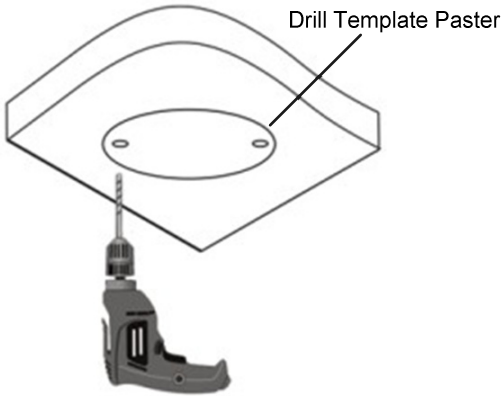

2. Insert the screw anchors.

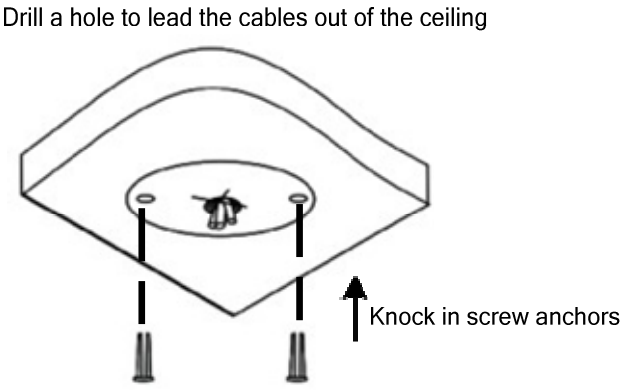

3. Unscrew the transparent dome cover with the supplied torx wrench.
4. Connect the camera cables and secure the camera.

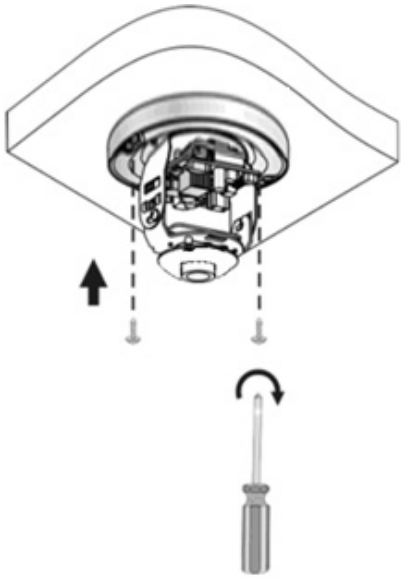

5. Insert a SD card into the slot.
6. Adjust the monitoring direction and tighten the screws after vertically adjusting the lens.

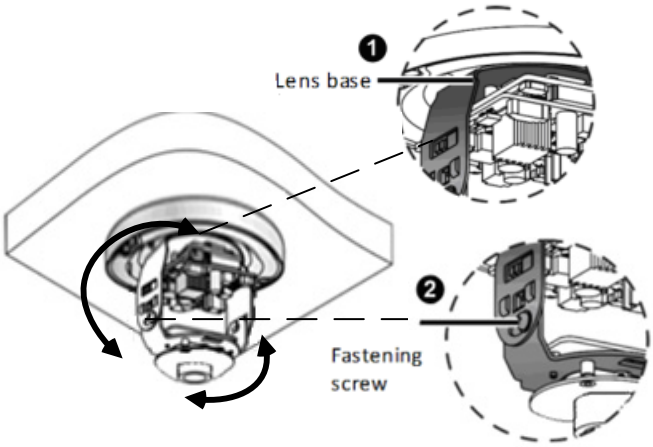

7. Secure the transparent dome cover with the supplied torx wrench.

For Open Installation

Lead the cables out from the open slot on the camera base before screwing the camera to the ceiling as shown in Step 4.

4.3.2 GV-TVD4711 / TVD4811

1. Follow steps 1 to 3 in *4.3.1 GV-AVD2700 / 4710 / 8710, GV-TVD4700 / 4710 / 4810 / 8710*.

To install an Ethernet / PoE cable:

2. Remove the large waterproof rubber plug from the base of the camera.
3. Cut a small opening on the tip of the large waterproof rubber plug.
4. Attach the cable protection connector to the Ethernet cable head and push the Ethernet cable through the opening.
5. Remove the cable protection connector. Thread the Ethernet cable through the large hole to connect to the camera and press to embed the waterproof rubber plug.

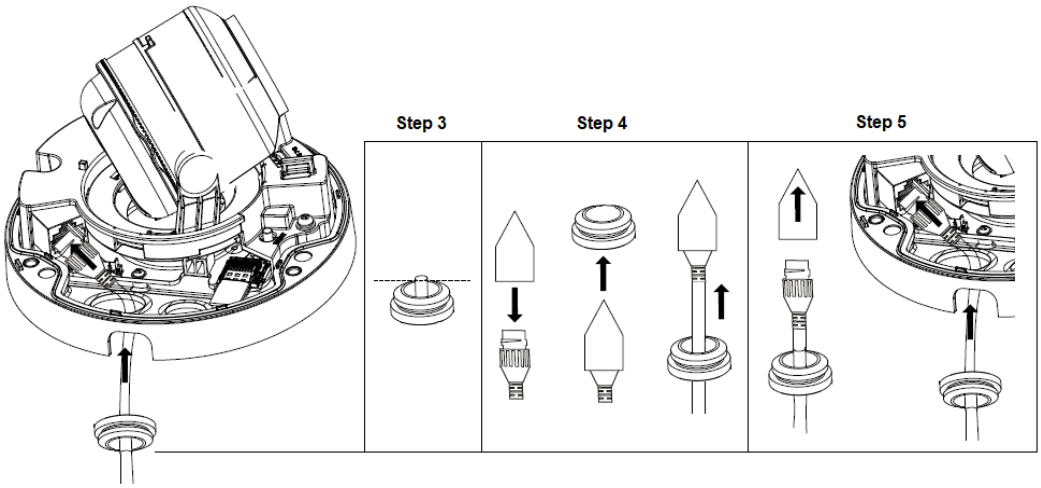

To install optional power and I/O wires:

6. Repeat steps 2 to 3 for the small waterproof rubber plug at the base of the camera.
7. Push the power and I/O wires through the opening on the small waterproof plug.
8. Thread the wires through the small hole and press to embed the waterproof rubber plug.
9. Attach the supplied 2-pin terminal block to the power wires.

10. Connect the 2-pin terminal block and I/O wires to the camera.

Tip: When connecting the I/O wires to the camera, thread the I/O wires through the protruded loop.

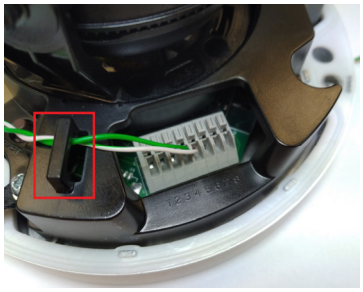

To finish the installation:

11. Secure the camera and insert a micro SD card to the slot.
12. Secure the transparent dome cover with the supplied torx wrench.

5. GV-TFD Series

Camera Type	Model No.
Mini Fixed IP Dome	GV-TFD4700
	GV-TFD4800

5.1 Packing List

5.1.1 GV-TFD4700 / 4800

- IR Mini Fixed IP Dome
- Screw Kit



- 2-Pin Power Terminal Block (for GV-TFD4700 only)



- Torx Wrench



- Drill Template Paster
- Download Guide

5.2 Overview

5.2.1 GV-TFD4700 / 4800

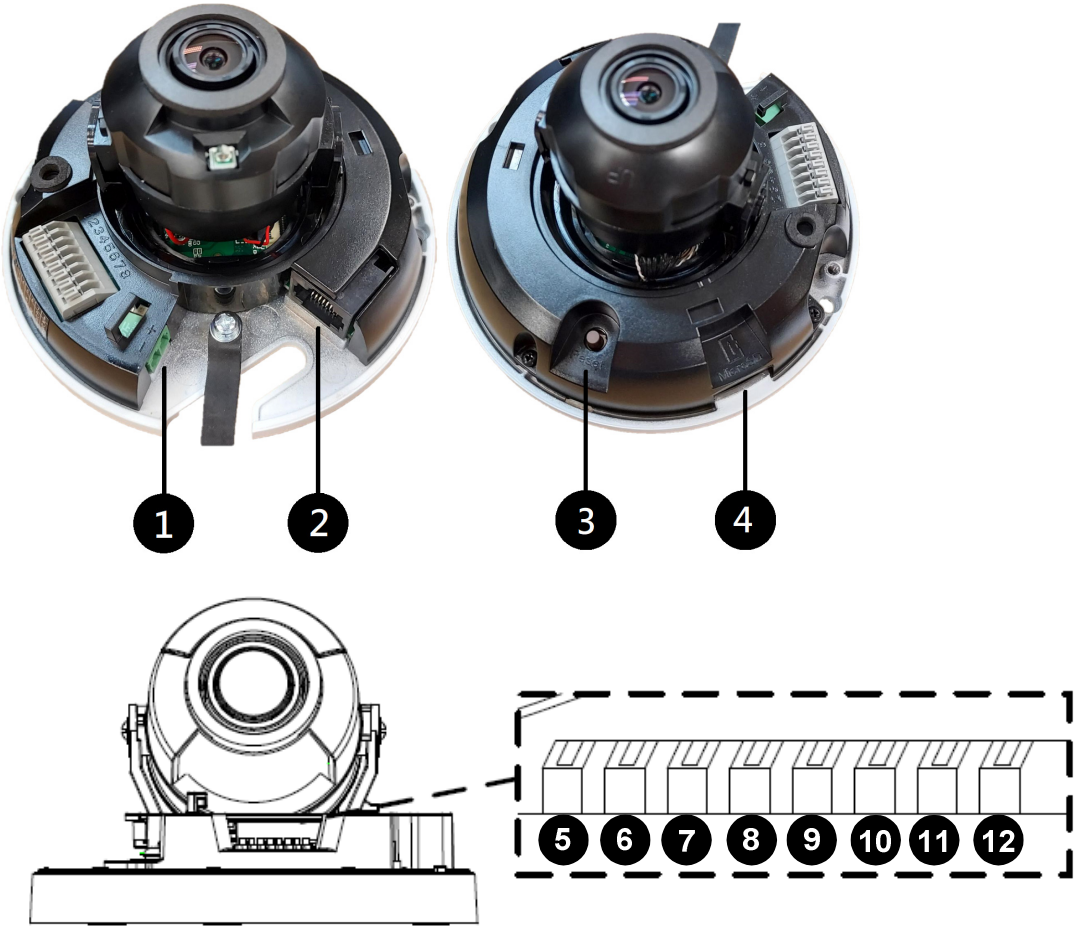

No.	Description	No.	Description
1	Power port (2-Pin terminal block)	7	Audio In
2	Ethernet port	8	GND
3	Default button	9	Alarm Input
4	Micro SD card slot	10	GND
5	Audio Out	11	Alarm Output P
6	GND	12	Alarm Output N

Note: There are two ways to supply power to the camera:

- Use a Power over Ethernet (PoE) adapter to connect the camera to the network, and the power will be provided at the same time.
- Plug the power adapter to the supplied 2-pin terminal block by inserting the striped wire to the right pin (-) and the black wire to the left pin (+), and then insert the 2-pin terminal block to *Power Connector, No. 1*.

5.3 Installation

The IR Mini Fixed IP Dome is designed for indoors. With the standard package, you can install the camera on the ceiling.

Below are the instructions for **Ceiling Mount**. There are two kinds of Ceiling Mount: **Concealed Installation** and **Open Installation**. In Concealed Installation, the cables are hidden in the ceiling. In Open Installation, the cables are led out from the open slot on the camera base.

5.3.1 GV-TFD4700 / 4800

For Concealed Installation

1. Follow steps 1 to 3 in *3.3 Installation*.
2. Insert a micro SD card.
3. Connect the Ethernet cable, I/O wires, and power terminal block to the camera through the opening on the camera base, and secure the camera to the ceiling.

Tip: When connecting the I/O wires to the camera, thread the I/O wires through the protruded loop as shown in *Step 10, 4.3.2 GV-TVD4711*.

4. Loosen the fastening screws and rotate the lens vertically toward the camera base on the side with the “UP” indicator.



Note: Make sure to adjust the lens as stated in Step 4 for any type of installation, in order for the lens to rotate smoothly upon powering up. For installation on the wall, also make sure the “UP” indicator is facing up towards the ceiling.

5. Secure the transparent dome cover with the supplied torx wrench.

For Open Installation

Lead the cables out from the opening on the camera base before screwing the camera to the ceiling in Step 3.

6. GV-FER5702

Camera Type	Model No.
IR Fisheye Rugged IP Camera	GV-FER5702

6.1 Packing List

6.1.1 GV-FER5702

- IR Fisheye Rugged IP Camera (GV-FER5702)



- Drill Template Paster



- Waterproof Rubber Set



- Screw Kit



- Download Guide

6.2 Overview

6.2.1 GV-FER5702



No.	Description	No.	Description
1	Power connector (DC 12V)	3	Green wire-Alarm output -
2	Ethernet connector / PoE	4	Yellow wire-Audio output
3	Brown wire-Alarm input	4	White wire-GND
3	Blue wire-GND	4	Purple wire-Audio input
3	Orange wire-Alarm output +		

Load Default Button

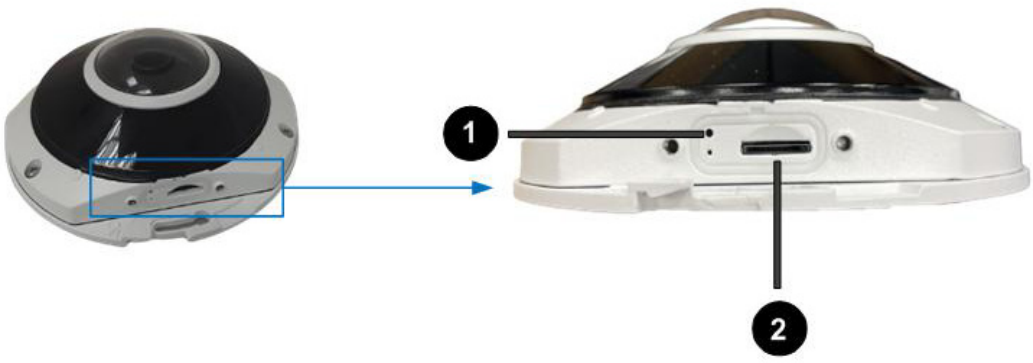

No.	Description	No.	Description
1	Load default button	2	SD card slot

Note: If the default button doesn't respond after pressing for 15 seconds, reboot the camera and try again within 10 minutes of rebooting.

6.3 Installation

The IR Fisheye Rugged IP Camera is designed for outdoors. With the standard package, you can install the camera on the wall or ceiling. Or, you can purchase optional mounting accessories to mount your camera on a wall.

Below are the instructions for **Ceiling Mount**.

1. Stick the drill template paster to the ceiling and drill holes on the ceiling according to the drill template.

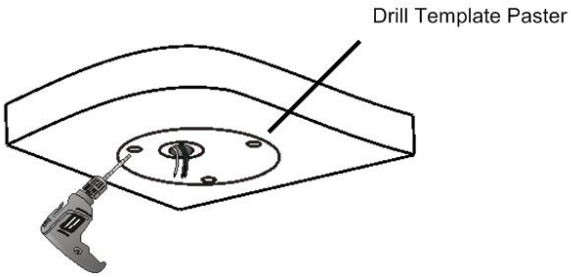

2. Insert the screw anchors.

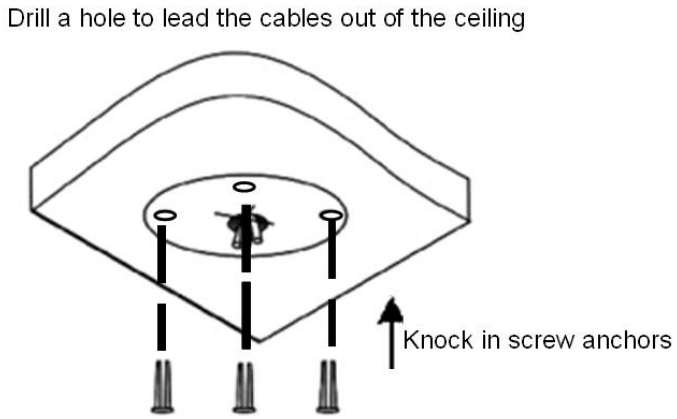

3. Remove the housing by turning it anticlockwise.

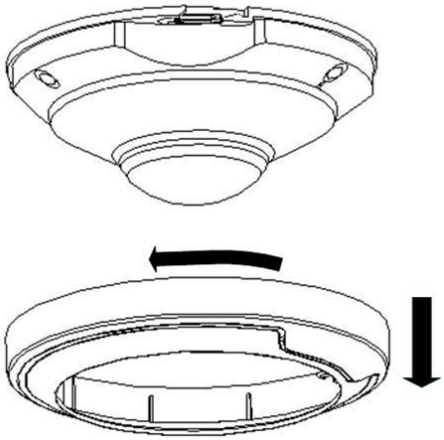

4. Secure the camera base onto the ceiling with 3 screws supplied and lock up the housing by turning it clockwise.

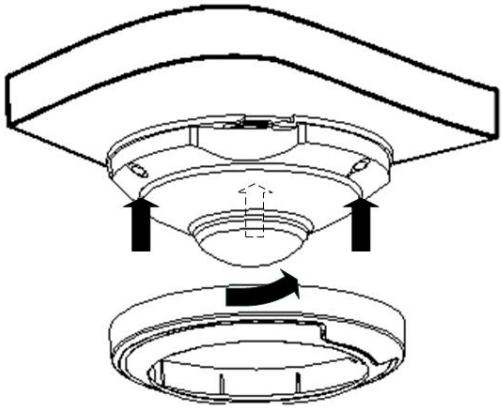

7. GV-PTZ5810-IR

Camera Type	Model No.
IR IP Mini PTZ Camera	GV-PTZ5810-IR

7.1 Packing List

7.1.1 GV-PTZ5810-IR

- IR IP Mini PTZ Camera (GV-PTZ5810-IR)



- Screw Kit

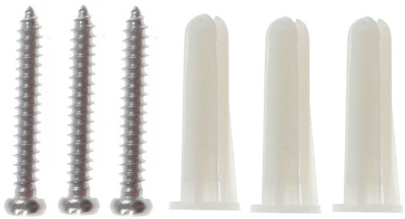

- Download Guide
- Drill Template Paster

7.2 Overview

7.2.1 GV-PTZ5810-IR





No.	Description	No.	Description
1	Power connector (DC 12V)	4	Orange / white wire-Alarm output_P
2	Ethernet connector / PoE	4	Orange wire-Alarm output_N
3	Yellow / black wire-RS485_A	5	Built-in microphone
3	Yellow wire-RS485_B	6	IR LED
4	Purple wire-Alarm input	7	Built-in speaker
4	Black wire-GND	8	Ready LED



No.	Description	No.	Description
1	Load default button	2	SD card slot

Note: If the default button doesn't respond after pressing for 15 seconds, reboot the camera and try again within 10 minutes of rebooting.

7.3 Installation

The IR IP Mini PTZ Camera is designed for indoors. With the standard package, you can install the camera on the wall or ceiling. Or, you can purchase optional mounting accessories to mount your camera on a wall.

Below are the instructions for **Ceiling Mount**.

1. Hold the camera and rotate the adapter plate counterclockwise to detach it from the camera.

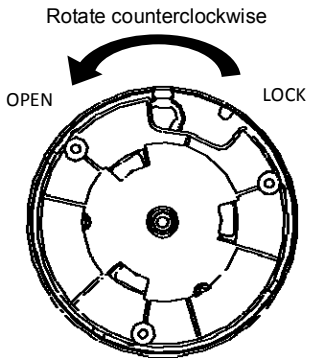

2. Stick the drill template paster to the ceiling and drill holes on the ceiling according to the drill template.

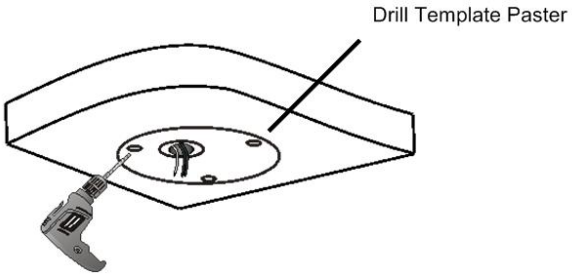

3. Fix the adapter plate to the ceiling with screws.

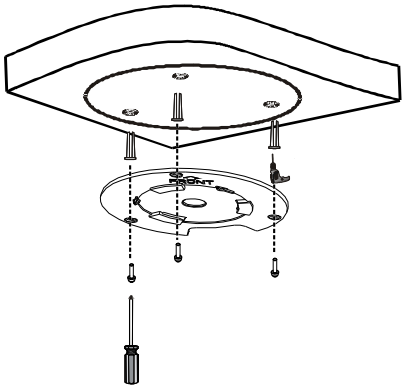

4. Secure the camera to the adapter plate and rotate the camera counterclockwise until it's fastened.

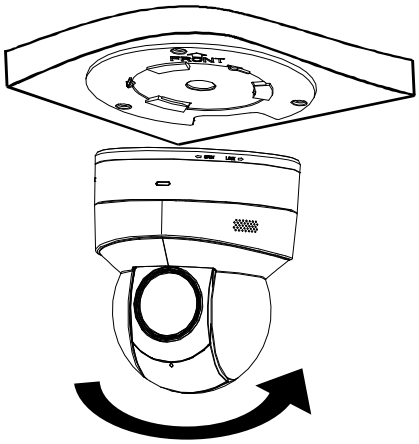

8. GV-TMS8800

Camera Type	Model No.
Multi-Lens IR Fixed IP Dome Camera	GV-TMS8800

8.1 Packing List

8.1.1 GV-TMS8800

- Multi-lens IR Fixed IP Dome Camera (GV-TMS8800)



- Drill Template Paster
- Screw Kit



- Waterproof Rubber Set



- Torx Wrench



- Download Guide

8.2 Overview

8.2.1 GV-TMS8800



No.	Description	No.	Description
1	Alarm input / output	5	Built-in microphone x 2 (on both sides)
2	Ethernet connector / PoE	6	IR LED x 2
3	Power connector (DC 12V)	7	Micro SD card slot
4	Audio input / output	8	Default button

Note: If the default button doesn't respond after pressing for 15 seconds, reboot the camera and try again within 10 minutes of rebooting.

8.3 Installation

The camera is designed for outdoors. With the standard package, you can install the camera on the ceiling. Or, you can purchase optional mounting accessories to mount your camera on a ceiling.

Below are the instructions for **Ceiling Mount**.

1. Stick the drill template paster to the ceiling and drill holes on the ceiling according to the drill template.

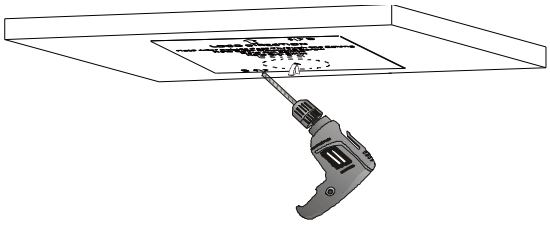

2. Unscrew the four screws to remove the housing from the camera base.

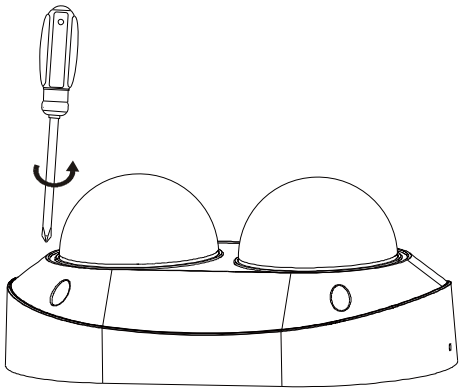

3. Insert the screw anchors in the ceiling.
4. Connect the camera tail cables with the external cables, and secure the camera base onto the ceiling using the supplied screws.

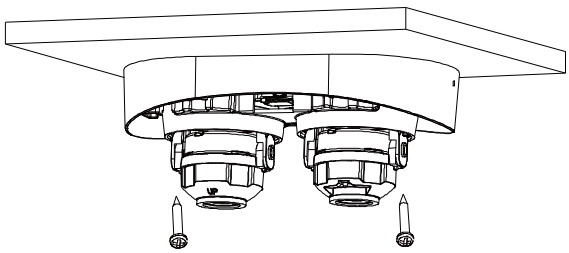

Caution: Do not pull hard when leading the tail cables; otherwise, it will cause loose or disconnected tail cables.

5. Adjust the horizontal shooting angle.

   Method 1: Rotate the tilt-shift lens and adapter ring.

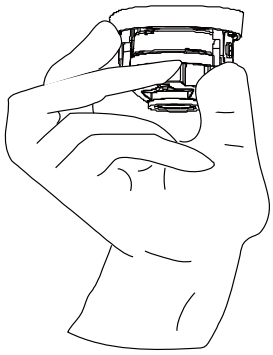

   Method 2: Rotate the LED cover.

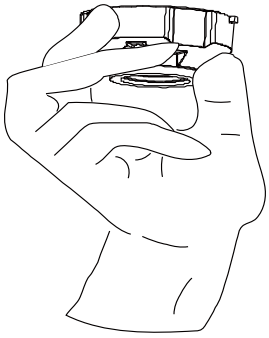

6. Adjust the vertical shooting angle: Loosen the screws on the adapter ring, adjust the shooting angle, and tighten the screws.

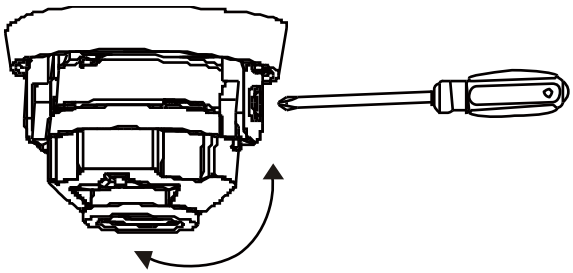

Caution: Stop rotating the lens when it reaches the limit; otherwise, the internal structure will be damaged.

7. Fix the housing to the camera base with the screws.

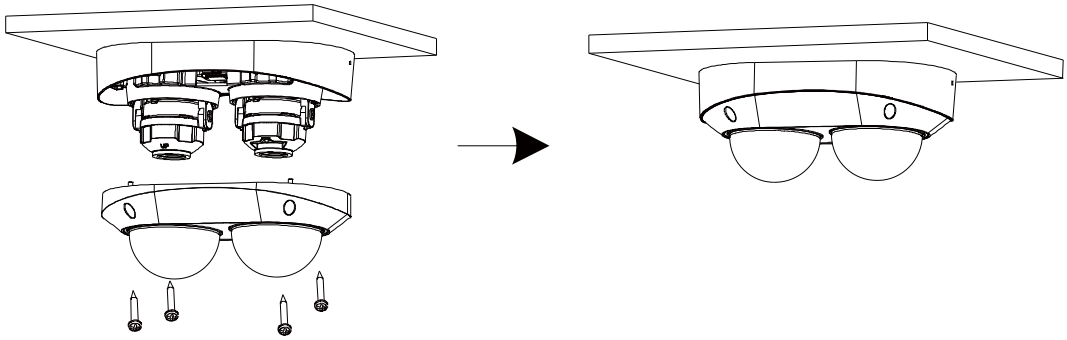

8.4 Optional Installation

You can optionally purchase the following accessories to fit your mounting environment:

- **GV-Mount511 for Wall Box Mount**.
- **GV-Mount107 + GV-Mount511 + GV-Mount704 for Pendant Tube Mount**.

For details, please see *GV-A/T/EBDSeries IPCamera Mount Installation Guide*.

9. Accessing the Camera

9.1 System Requirements

Once installed, your camera is accessible over the network. Make sure your PC has good network connection and meet the following requirements:

CPU	Intel Core i5-4670, 3.40 GHz
Memory	DDR3 8 GB RAM
On Board Graphics	Intel HD Graphics 4600 (Versions of driver from year 2014 or later required)
Web Browsers	● Internet Explorer 11.0 or above ● Google Chrome ● Microsoft Edge ● Mozilla Firefox ● Safari

Note:

1. Some functions are not available on non-IE browsers, e.g., Local Parameters (see *3.1.2 Local Parameters* in the *User's Manual*) is not supported by Google Chrome.
2. Non-IE browsers supporting complete functions include Google Chrome 45.0 or later, Microsoft Edge 52.0 or later, and Mozilla Firefox 79 or later.
3. The following models support complete functions on non-IE browsers: GV-BLFC5800, GV-EBD2705 / 4704 / 4813 / 8800 / 8813, GV-EBDP5800, GV-EBFC5800, GV-FER5702 (V1.06 or later), GV-TBL2706 / 4705 / 4807 / 4810 / 8804 / 8810, GV-TBLP5800, GV-TDR2705 / 4704 / 4803 / 8805, GV-TFD4800, GV-TMS8800, GV-TVD4810 (V1.05 or later) / 4811 / 8810, GV-PTZ5810-IR (V1.02 or later).
4. Live view is not supported on Safari for the following models: GV-BLFC5800, GVEBD4704 / 4813 / 8800 /8813, GV-EBDP5800, GV-EBFC5800, GV-FER5702, GVPTZ5810-IR, GV-TBL2705 / 4705 / 4807 / 4810 / 8804 / 8810, GV-TBLP5800, GVTDR2704-2F / 4704-2F / 4704-4F / 4803-2F / 8805, GV-TFD4800, GV-TVD4810 / 4811 / 8810.

9.2 Looking Up the Dynamic IP Address

By default, when the camera is connected to LAN a with DHCP server, it is automatically assigned with a dynamic IP address. Follow the steps below to look up its IP address.

Note:

1. The computer you use to configure the IP address must be under the same LAN as your camera.
2. By default, the Administrator's username is **admin** and cannot be modified.

---

1. Download and install the **GV-IP Device Utility** program from the company website.
2. On the GV-IP Utility window, click the button to search for the IP devices connected in the same LAN. Click the **Name** or **Mac Address** column to sort.
3. Find the camera with its Mac Address, click on its IP address.

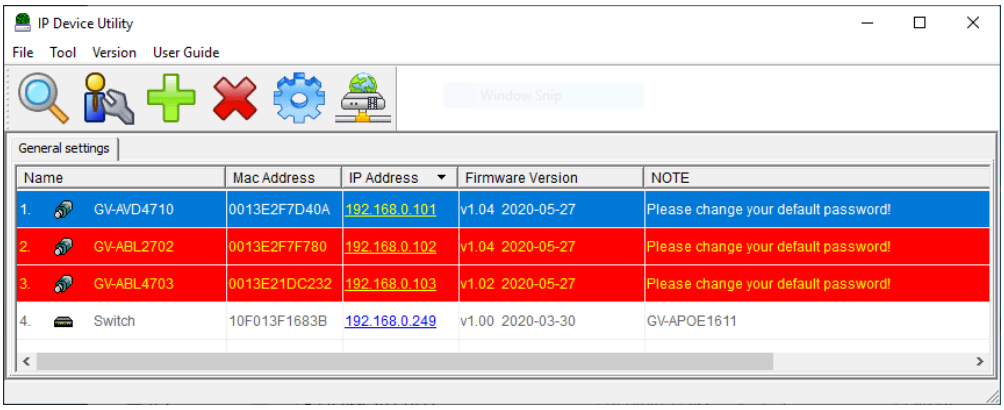

4. For the first-time users, you will be requested to set up a password.
5. Type a new password and click **OK**.
6. Type your username and password on the login page and click **Login**.

9.3 Configuring the IP Address

If the camera is connected to a LAN without DHCP server, the default IP address will be **192.168.0.10**. Follow the steps below to modify the IP address to avoid IP conflict with other GV-IP devices on the same LAN.

1. Open your Web browser, and type the default IP address **192.168.0.10**.
2. Type your username and password. Click **Login**.
3. Click **Setup**, select **Common** in the left menu and select **Network**.

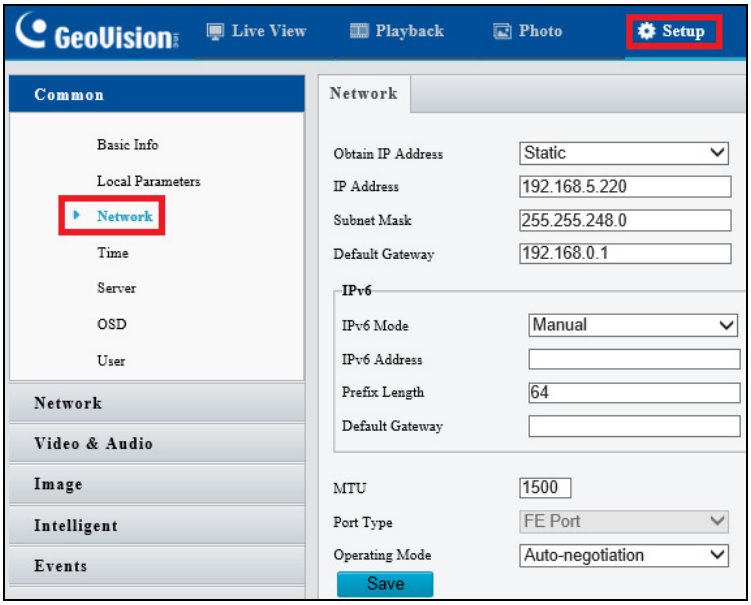

4. Select **Static** from the **Obtain IP Address** drop-down list.
5. Enter the IP address, subnet mask, and default gateway address. Make sure that the IP address of the camera is unique in the network.
6. Click **Save**.

10. The Web Interface

Once you log in the Web interface, you will see the live view as shown below.

GV-TMS8800

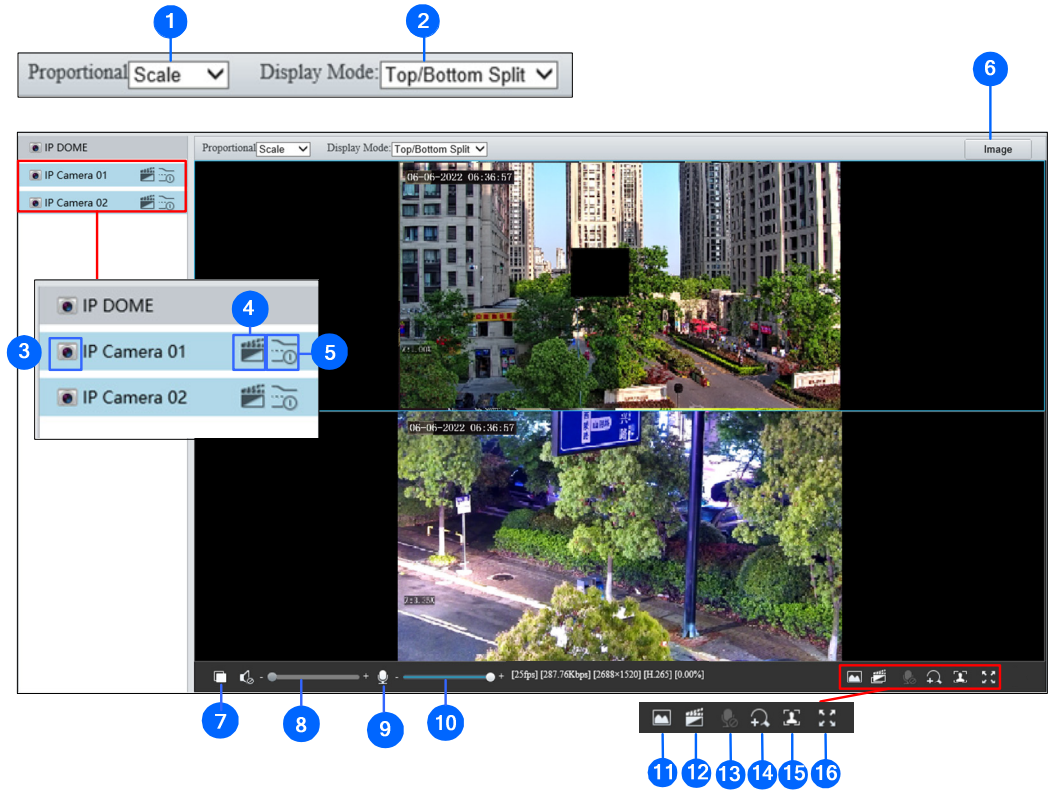

No.	Name	Function
1.	Proportional	Set the display ratio of the image. ■ **Scale:** display images by 16:9. ■ **Stretch:** display images by window size. ■ **Original:** display images in its original size.
2.	Display Mode	Set the display mode in the window. ■ **Single Channel:** display live video of a single channel. ■ **Left/Right Split:** display live video in left / right split mode. ■ **Top/Bottom Split:** display live video in top / bottom split mode. ■ **Picture in Picture:** open a floating live view window on top of the current window.

3.	Stop / Start Live View	Stop/start live view of the selected channel.
4.	Local Recording	Stop/start local recording.
5.	Live Stream	Select a live video stream: main stream, sub stream or third stream (when enabled).
6.	Image	Open the image setting page. – See 3.5.1 Image.
7.	Play/Stop	Play or stop live video. This is the same function as No. 3.
8.	Video Volume	Adjust the audio output volume on the PC.
9.	Microphone	Enable or disable microphone.
10.	Microphone Volume	Adjust the microphone volume on the PC during audio communication between the PC and the camera.
11.	Snapshot	Take a snapshot of the current image displayed on the PC.
12.	Local Recording	Stop/start local recording. This is the same function as No. 4.
13.	Two-way Audio	Start or stop two-way audio.
14.	Digital Zoom	Enable or disable digital zoom. – See 2.2.1 Digital Zoom.
15.	Face Snapshot	Start or stop face snapshot. By activating this function, the camera takes face snapshots, and displays them on the right of the live view window. Before activating this function, you must enable **Face Detection** - See *3.6.1.7 Face Detection*.
16.	Full Screen	Display in full screen mode.

Note:

1. To configure individual channel separately, click on the corresponding live view before proceeding with the configurations.
2. The paths for saving snapshots and local recordings are set in Local Settings. See *3.1.2 Local Parameters*.

Other Models

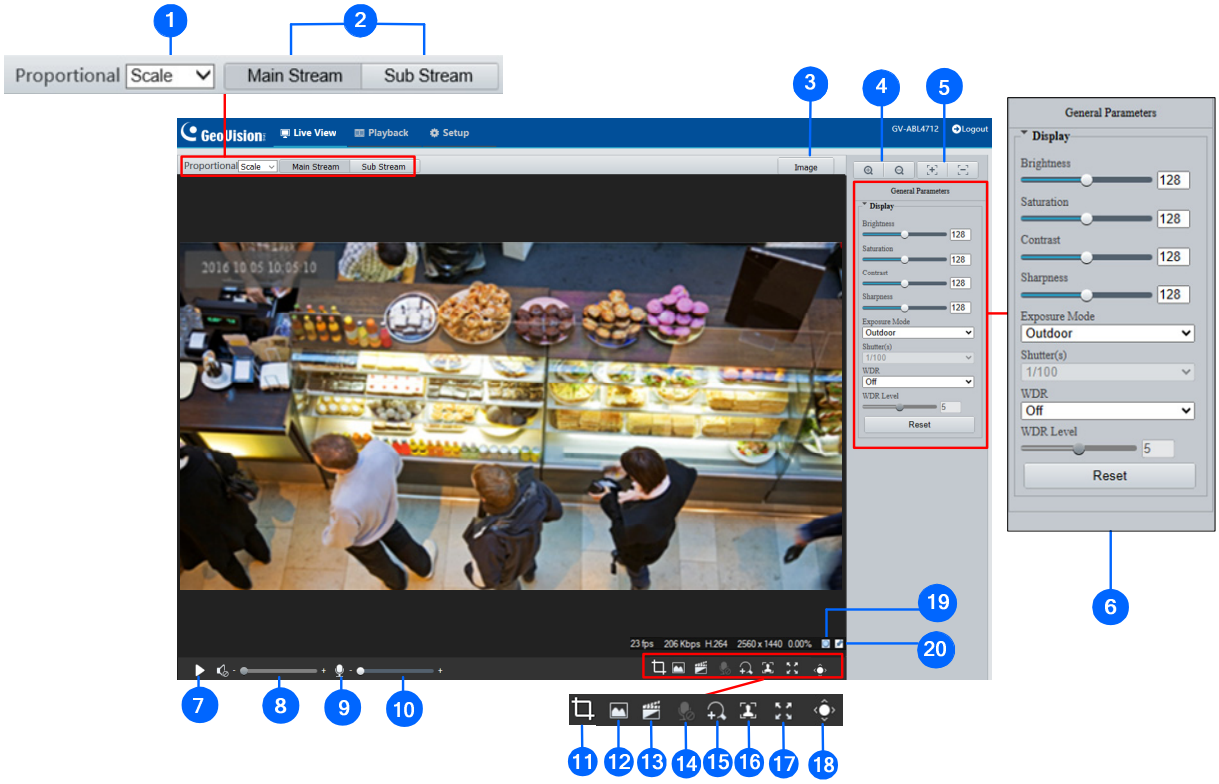

No.	Name	Function
1	Proportional	Set the display ratio of the image. • Scale: display images by 16:9. • Stretch: display images by window size. • Original: display images in its original size.
2	Live Stream	Select a live video stream: main stream, sub stream or third stream (when enabled).
3	Image	Open the image setting page. – See *3.5.1 Image* in the *User's Manual*.
4	Zoom +/-	Only for **models with motorized varifocal lens**, increase or decrease the camera's optical zoom.
5	Focus +/-	Only for **models with motorized varifocal lens**, increase or decrease the camera focus.
6	General Parameters	Only for **GV-EBD2704, EBD2705, TBL2705, TBL2706, TDR2704, TDR2705**. Configure the parameters for image enhancement and exposure. See *3.5.1 Image* in the User's Manual for details.

7	Play/Stop	Play or stop live video.
8	Video Volume	Only for **audio-supporting models**, adjust the audio output volume on the PC.
9	Microphone	Only for **audio-supporting models**, enable  or disable  microphone.
10	Microphone Volume	Only for **audio-supporting models**, adjust the microphone volume on the PC during audio communication between the PC and the camera.
11	Calculate Pixels	Only for **GV-EBD2704, EBD2705, TBL2705, TBL2706, TDR2704, TDR2705**. Enable and drag the mouse on the desired object on the live view to calculate its size in pixels.
12	Snapshot	Take a snapshot of the current image displayed on the PC.
13	Local Recording	Start  or stop  local recording.
14	Two-way Audio	Only for **two-way-audio-supporting models**, start  or stop  two-way audio.
15	Digital Zoom	Enable  or disable  digital zoom. – See *2.2.1.1 Digital Zoom* in the *User's Manual*.
16	Face Snapshot	Only for **face-snapshot-supporting models**, start  or stop  face snapshot. By activating this function, the camera takes face snapshots, and displays them on the right of the live view window. Before activating this function, you must enable **Face Detection** - See *3.6.1.7 Face Detection*.
17	Full Screen	Display in full screen mode.
18	Control Panel	Hide or show the camera's optical zoom and focus or the general parameter functions.
19		Reset the packet loss rate to zero.
20		Click to always display packet loss rate and bit rate information at the bottom. Click again to restore to only displaying the information for 3 seconds when the mouse cursor is moved onto the live view.

Note:

1. The paths for saving snapshots and local recordings are set in Local Settings. See *3.1.2 Local Parameters* in the *User's Manual*.
2. The No. 19 and 20 buttons will appear on the floating toolbar when you move the mouse cursor onto the live view.

11. Upgrading System Firmware

GeoVision periodically releases updated firmware on the company website. To load the new firmware into the camera, follow the instructions below.

1. At the top of the Web interface, click **Setup.**
2. In the left menu, select **System** and select **Maintenance**. This page appears.

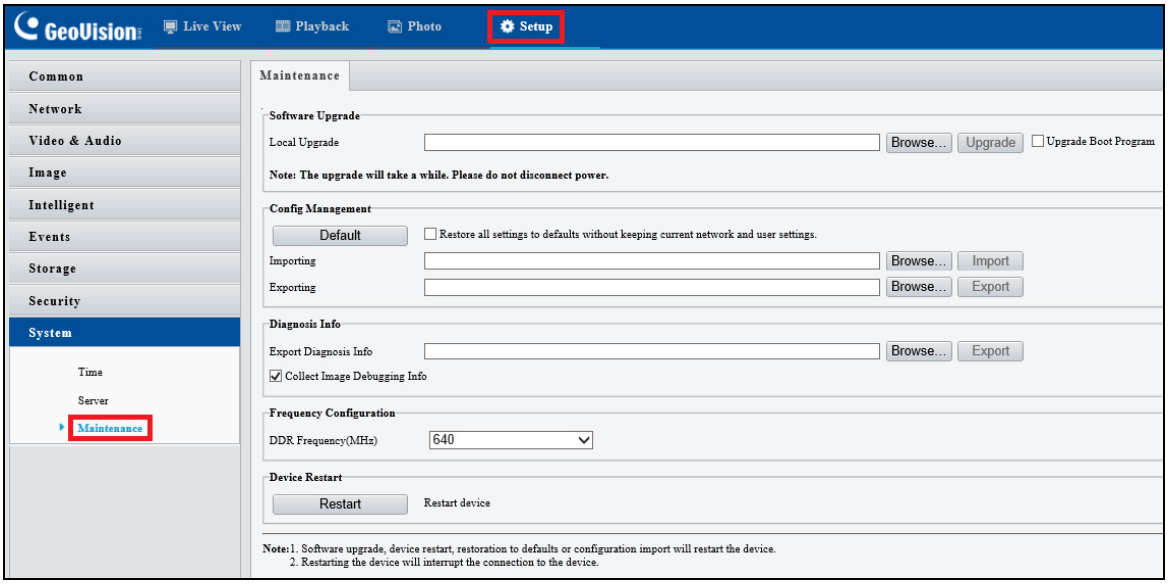

3. Click **Browse** under **Software Upgrade** to locate the firmware file (.zip) saved at your local computer.
4. Click **Upgrade** to process the upgrade.

12. Restoring to Factory Default

If for any reason the camera is not responding correctly, you can restore the camera back to its factory default settings using the Web interface or the Default button.

Note:

1. Only the following models have a default button: **GV-ABL2703 series** / **4703**, **GV-AVD2700** / **4710** / **8710**, **GV-EBD4711** / **4712** / **8711** / **8813**, **GV-FER5702, GV-PTZ5810-IR**, **GV-TBL2703 series** / **4703** / **4807** / **8804, GV-TFD4700** / **4800, GV-TMS8800,** and **GV-TVD4700** / **4710** / **4711** / **4811** / **8710** / **8810**. For where the button is on the camera, see the *Overview* section in their respective chapters.
2. If the default button doesn't work after pressing for 15 seconds, reboot the camera and try again within 10 minutes of rebooting.

---

1. In the Web interface, click **Setup**.
2. In the left menu, select **System** and select **Maintenance**.
3. Under the **Config Management** section, click **Default**.

