AXIS TC1702 Back Cover

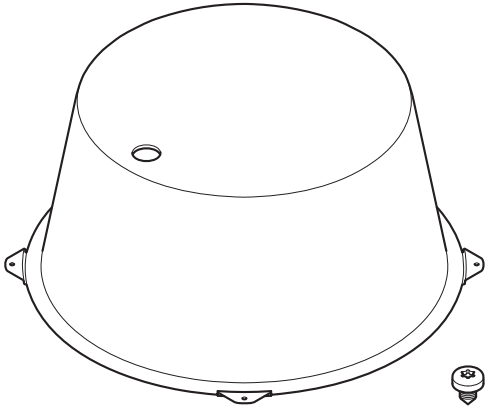

4x 16x

Installation Guide


166 mm
(6.5 in)

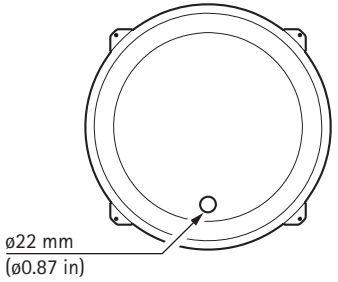
ø22 mm
(ø0.87 in)

1.1

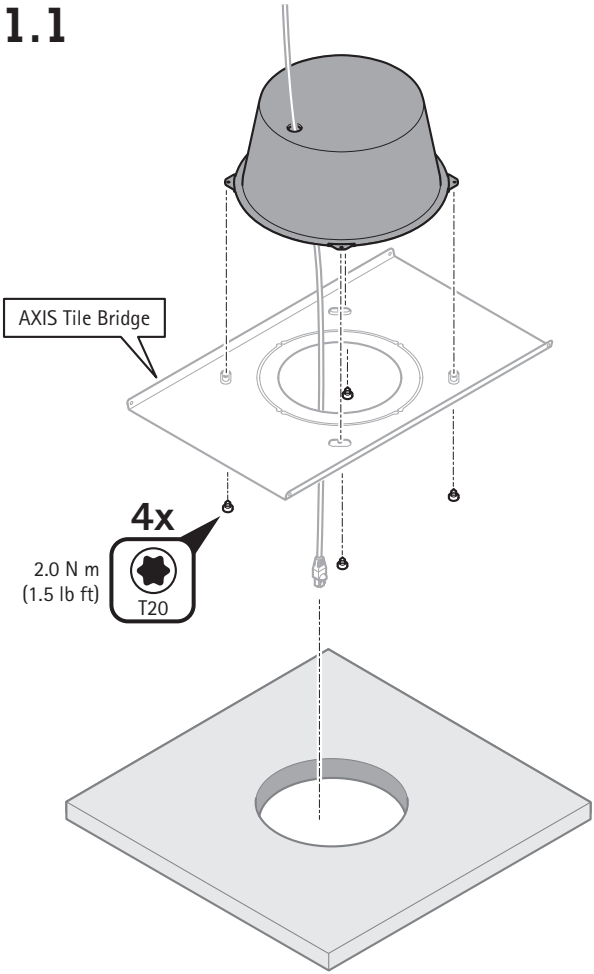

1.2

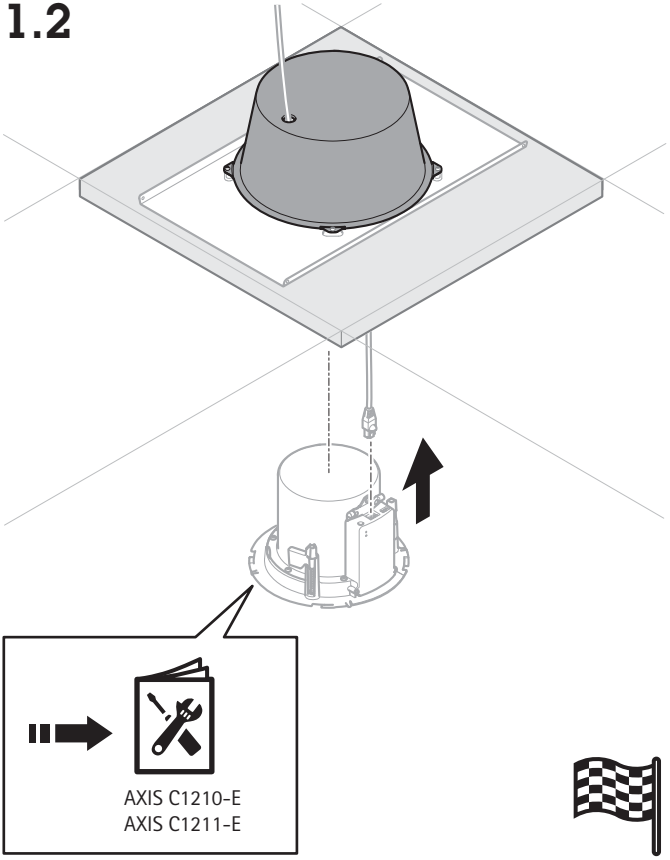

Installation Guide
AXIS TC1702 Back Cover
© Axis Communications AB, 2022
Ver. 1.0
Date: April, 2022
Part No. 2541892