P2423 Outline Dimension
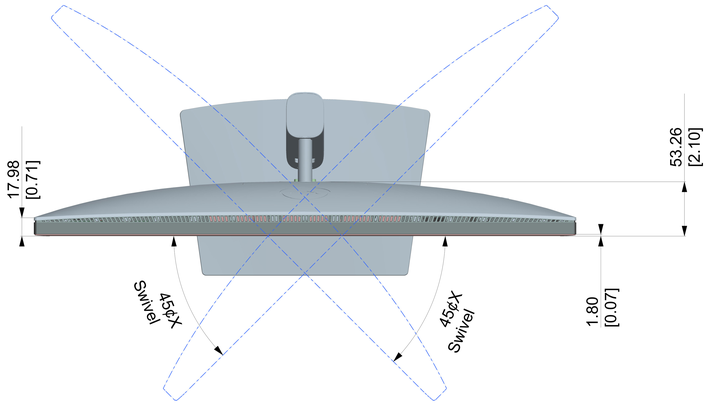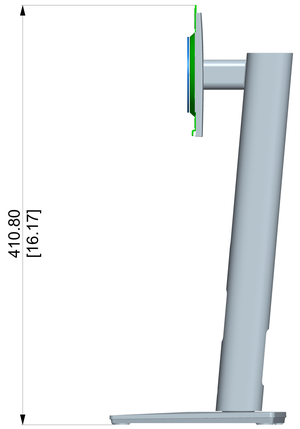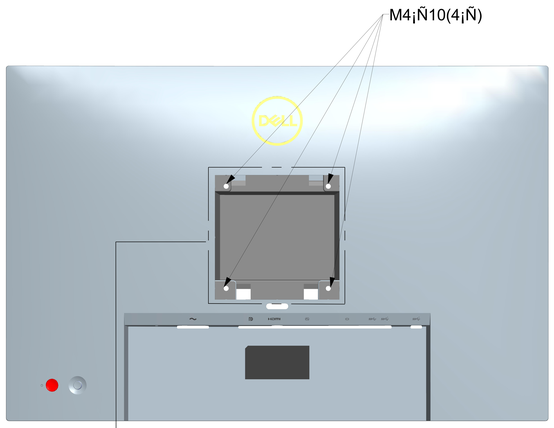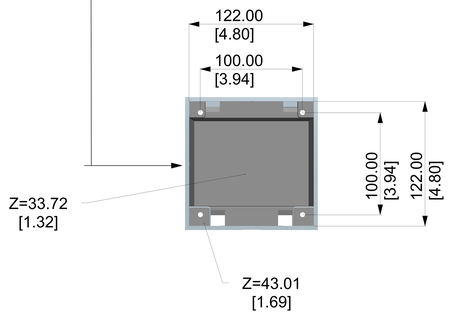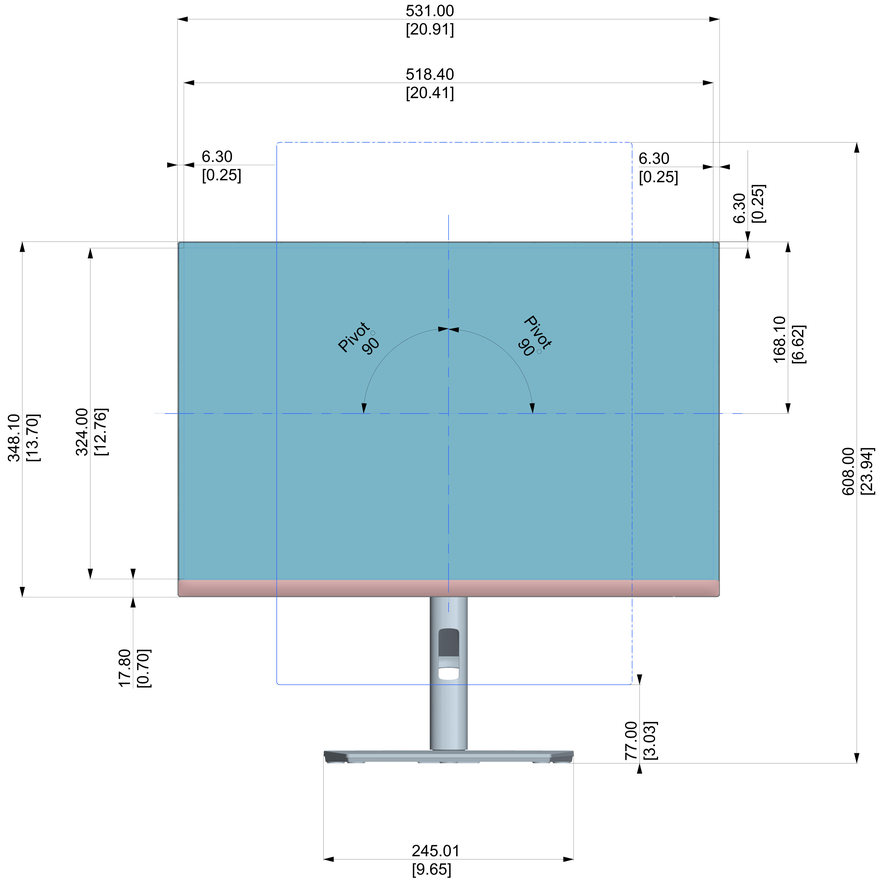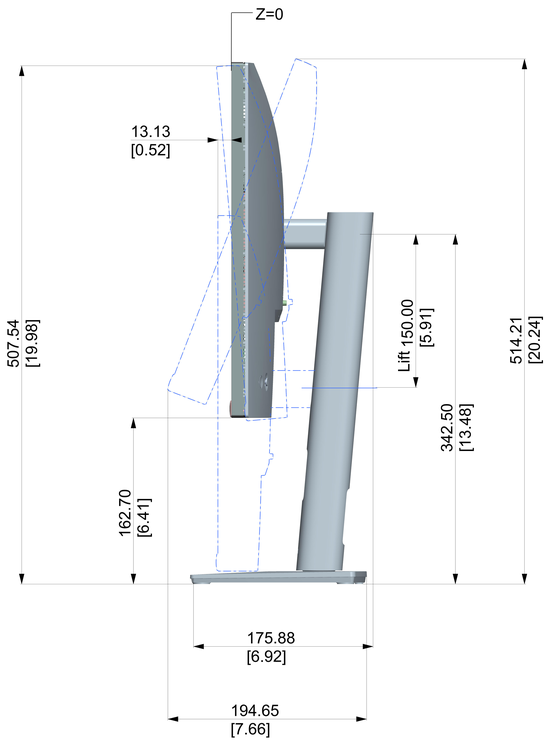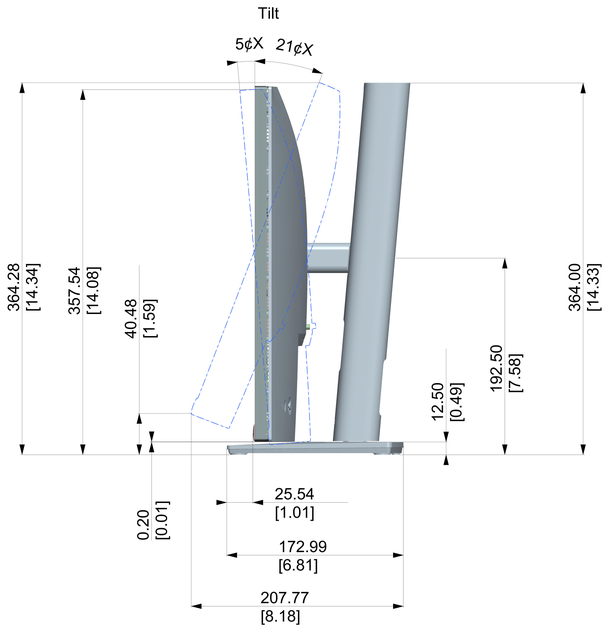
Unit : mm[inch]
Dimension : Nominal
Drawing : Not to scale