JUNIPER NETWORKS | Engineering Simplicity

ACX7509 Cloud Metro Router Hardware Guide

Published
2022-12-19

Juniper Networks, Inc.
1133 Innovation Way
Sunnyvale, California 94089
USA
408-745-2000
www.juniper.net

Juniper Networks, the Juniper Networks logo, Juniper, and Junos are registered trademarks of Juniper Networks, Inc. in the United States and other countries. All other trademarks, service marks, registered marks, or registered service marks are the property of their respective owners.

Juniper Networks assumes no responsibility for any inaccuracies in this document. Juniper Networks reserves the right to change, modify, transfer, or otherwise revise this publication without notice.

ACX7509 Cloud Metro Router Hardware Guide
Copyright © 2022 Juniper Networks, Inc. All rights reserved.

The information in this document is current as of the date on the title page.

YEAR 2000 NOTICE

Juniper Networks hardware and software products are Year 2000 compliant. Junos OS has no known time-related limitations through the year 2038. However, the NTP application is known to have some difficulty in the year 2036.

END USER LICENSE AGREEMENT

The Juniper Networks product that is the subject of this technical documentation consists of (or is intended for use with) Juniper Networks software. Use of such software is subject to the terms and conditions of the End User License Agreement ("EULA") posted at https://support.juniper.net/support/eula/. By downloading, installing or using such software, you agree to the terms and conditions of that EULA.

Table of Contents

About This Guide | ix

1 Overview

ACX7509 Router System Overview | 2

- ACX7509 Router Description | 2
- ACX7509 Router Configurations | 4
- Field-Replaceable Units in ACX7509 Routers | 5
- ACX7509 Router Hardware and CLI Terminology Mapping | 8
- Hardware Redundancy of ACX7509 Router Components and Functionality | 10
- ACX7509 System Software Overview | 11

ACX7509 Chassis | 12

- ACX7509 Router Chassis | 12
- ACX7509 Physical Specifications | 15
- ACX7509 Router Midplane Description | 16
- ACX7509 Cable Management System | 17

Cooling System and Airflow in ACX7509 Routers | 19

ACX7509 Power System | 23

- ACX7509 AC/HVDC Power Supply Description | 24
- ACX7509 DC Power Supply Description | 31

ACX7509 Routing and Control Board | 37

ACX7509 Forwarding Engine Board | 43

ACX7509 Flexible PIC Concentrators | 46

- The JNP-FPC-20Y Flexible PIC Concentrator | 49
- The JNP-FPC-16C Flexible PIC Concentrator | 53
- The JNP-FPC-4CD Flexible PIC Concentrator | 58

2 Site Planning, Preparation, and Specifications

Site Preparation Checklist for ACX7509 Routers | 64

ACX7509 Site Guidelines and Requirements | 65

Environmental Requirements and Specifications for ACX7509 Routers | 66

General Site Guidelines | 67

Site Electrical Wiring Guidelines | 67

ACX7509 Grounding Cable and Lug Specifications | 68

Clearance Requirements for Airflow and Hardware Maintenance of ACX7509 Routers | 70

ACX7509 Power Planning | 71

Calculating Power Requirements for the ACX7509 Router | 71

ACX7509 Rack and Cabinet Requirements | 77

Rack Requirements for ACX7509 Routers | 78

Cabinet Requirements for ACX7509 Routers | 79

ACX7509 Transceiver Support and Network Cable Planning | 81

Determining Transceiver Support for ACX7509 | 81

Cable and Connector Specifications for ACX7509 Routers | 82

Calculating Power Budget and Power Margin for Fiber-Optic Cables | 89

How to Calculate Power Budget for Fiber-Optic Cables | 90

How to Calculate Power Margin for Fiber-Optic Cables | 90

Fiber-Optic Cable Signal Loss, Attenuation, and Dispersion | 92

ACX7509 Management Cable Specifications and Pinouts | 93

Management Cable Specifications for ACX7509 Routers | 94

RJ-45 to DB-9 Serial Port Adapter Pinout Information | 94

Console/ToD Port Connector Pinout on ACX7509 Routers | 95

USB Port Specifications for the ACX7509 Routers | 96

3 Initial Installation and Configuration

ACX7509 Router Installation Overview | 98

Unpack an ACX7509 Router | 99

Tools and Parts Required to Unpack the ACX7509 Router | **99**

Unpack the ACX7509 Shipping Pallet | **100**

Unpack the ACX7509 Flexible PIC Concentrators, Routing Control Boards, and Forwarding Engine Boards | **100**

Compare the ACX7509 Order to the Packing List | **101**

Install the ACX7509 in a Rack | 104

Mount an ACX7509 in a Four-Post Rack Using a Mechanical Lift | **105**

Manually Mount an ACX7509 Router in a Four-Post Rack | **108**

Connect an ACX7509 Router to External Devices | 112

Connect an ACX7509 Router to a Management Console | **113**

Connect an ACX7509 Router to a Network for Out-of-Band Management | **114**

Connect an ACX7509 Router to External Clocking and Timing Devices | **114**

Register Products—Mandatory to Validate SLAs | 115

Connect Earth Ground to ACX7509 Routers | 115

Connect Power to the ACX7509 Router | 118

Connect AC Power to an ACX7509 Router | **119**

Connect DC Power to the ACX7509 Router | **121**

Perform Initial Software Configuration of the ACX7509 Router | 126

4 **Maintaining Components**

ACX7509 Fan Tray Maintenance | 131

Remove a Fan Tray from the ACX7509 Router | **131**

Install a Fan Tray in the ACX7509 Router | **133**

ACX7509 Power Supply Maintenance | 134

AC/HVDC Power Supply Replacement in an ACX7509 Router | **135**

Remove an AC/HVDC Power Supply from the ACX7509 Router | **136**

Install an AC/HVDC Power Supply in the ACX7509 Router | **137**

DC Power Supply Replacement in an ACX7509 Router | **138**

Remove a DC Power Supply from the ACX7509 Router | **139**

Install a DC Power Supply in the ACX7509 Router | **140**

ACX7509 Routing and Control Board Maintenance | 142

Remove the Routing and Control Board from the ACX7509 Router | **142**

Install the Routing and Control Board in the ACX7509 Router | **144**

ACX7509 Forwarding Engine Board Maintenance | 145

Remove the Forwarding Engine Board from the ACX7509 Router | **147**

Install the Forwarding Engine Board in the ACX7509 Router | **149**

ACX7509 Flexible PIC Concentrator Maintenance | 151

Remove a Flexible PIC Concentrator from the ACX7509 Router | **152**

Install a Flexible PIC Concentrator in the ACX7509 Router | **154**

ACX7509 Cable Management System Maintenance | 156

Install the ACX7509 Cable Management System | **157**

Remove the ACX7509 Cable Management System | **163**

5 **Troubleshooting Hardware**

Troubleshooting the ACX7509 Router | 167

Alarm Types and Severity Classes on ACX Series Routers | **167**

6 **Contacting Customer Support and Returning the Chassis or Components**

Contacting Customer Support | 170

Return Procedures for the ACX7509 Chassis or Components | 171

How to Return a Hardware Component to Juniper Networks, Inc. | **171**

How to Locate the Serial Number on an ACX7509 Router or Component | **173**

List the Chassis and Component Details Using the CLI | **173**

Locate the Chassis Serial Number ID Label on an ACX7509 Router | **174**

Locate the Serial Number ID Label on an ACX7509 Fan Tray | **174**

Locate the Serial Number ID Label on an ACX7509 Power Supply Module | **175**

Locate the Serial Number ID Label on an ACX7509 Forwarding Engine Board | **175**

Locate the Serial Number ID Label on an ACX7509 Routing and Control Board | **176**

Locate the Serial Number ID Label on an ACX7509 Flexible PIC Concentrator | 177

Contact Customer Support to Obtain Return Material Authorization | 178

Guidelines for Packing and Shipping Hardware Components | 178

7 Safety and Compliance Information

General Safety Guidelines and Warnings | 182

Definitions of Safety Warning Levels | 183

Qualified Personnel Warning | 185

Warning Statement for Norway and Sweden | 185

Fire Safety Requirements | 186

Installation Instructions Warning | 187

Restricted Access Warning | 188

Ramp Warning | 189

Chassis and Component Lifting Guidelines | 190

Rack-Mounting and Cabinet-Mounting Warnings | 190

Grounded Equipment Warning | 194

Radiation from Open Port Apertures Warning | 195

Laser and LED Safety Guidelines and Warnings | 196

Maintenance and Operational Safety Guidelines and Warnings | 199

General Electrical Safety Guidelines and Warnings | 205

Prevention of Electrostatic Discharge Damage | 206

Site Electrical Wiring Guidelines | 208

AC Power Electrical Safety Guidelines | 209

AC Power Disconnection Warning | 210

DC Power Disconnection Warning | 211

DC Power Grounding Requirements and Warning | 212

DC Power Wiring Sequence Warning | 213

DC Power Wiring Terminations Warning | 215

Multiple Power Supplies Disconnection Warning | 216

TN Power Warning | 217

Action to Take After an Electrical Accident | 217

Agency Approvals for ACX7509 Routers | 218

Compliance Statements for NEBS | 220

Compliance Statements for EMC Requirements | 220

Compliance Statements for Environmental Requirements | 222

About This Guide

Use this guide to install hardware and perform initial software configuration, routine maintenance, and troubleshooting for the ACX7509 Router.

After completing the installation and basic configuration procedures covered in this guide, refer to the Junos OS Evolved documentation for information about further software configuration.

1

CHAPTER

Overview

ACX7509 Router System Overview | 2

ACX7509 Chassis | 12

Cooling System and Airflow in ACX7509 Routers | 19

ACX7509 Power System | 23

ACX7509 Routing and Control Board | 37

ACX7509 Forwarding Engine Board | 43

ACX7509 Flexible PIC Concentrators | 46

ACX7509 Router System Overview

SUMMARY

Learn about the ACX7509 router, its hardware components, the CLI terms that match terms in the user documentation, and the Junos OS Evolved software that runs the ACX7509 router.

IN THIS SECTION

- ACX7509 Router Description | 2
- ACX7509 Router Configurations | 4
- Field-Replaceable Units in ACX7509 Routers | 5
- ACX7509 Router Hardware and CLI Terminology Mapping | 8
- Hardware Redundancy of ACX7509 Router Components and Functionality | 10
- ACX7509 System Software Overview | 11

ACX7509 Router Description

IN THIS SECTION

- Benefits of the ACX7509 Router | 3

The Juniper Networks® ACX7509 Router is a fully redundant (control & forwarding) 4.8Tbps capacity, high-end aggregation router in a 5U form. The ACX7509 router offers 1GbE, 10GbE, 25GbE, 40GbE, 50GbE, 100GbE, 200GbE, and 400GbE high-port density with PTP (Class C) and MACsec support. This router runs only on Junos OS Evolved and delivers high performance, scalability, and flexibility to support IP services and functions for service providers, data centers, web, and enterprise networks.

The ACX7509 router provides several capabilities that include segment routing, advanced timing, flexible licensing and a comprehensive set of features that are suited for 5G and cloud metro architectures.

Figure 1: Front View of the ACX7509 Router

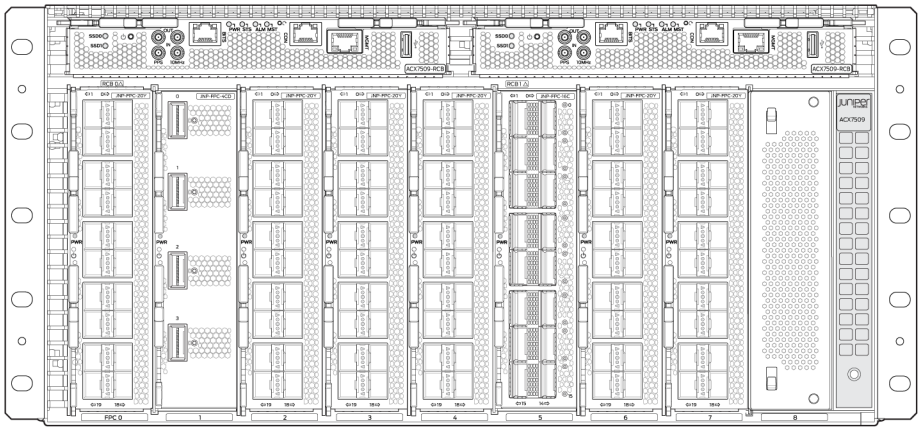

Figure 2: Rear View of the ACX7509 Router

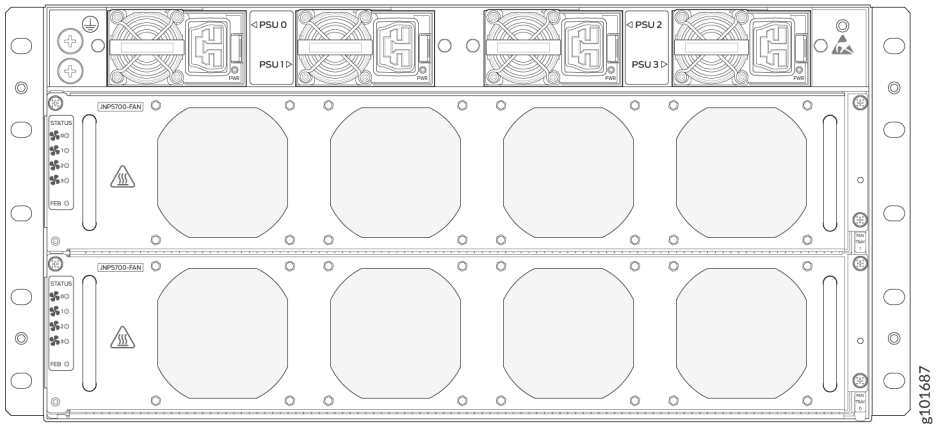

Benefits of the ACX7509 Router

- **Ease of deployment**—The ACX7509 features a compact 5U modular chassis for sites with limited space or power.

- **Advanced Timing features**—Supports Class C timing and the major International Telecommunication Union Telecommunication Standardization (ITU-T) timing profiles, making it ideally suited for low-latency service delivery.
- **Automation and Programmability**—Combined with Junos OS Evolved and Juniper Paragon™ Automation, enables you to quickly deploy new services, automate and simplify network operations, and maintain high-quality network services.
- **Zero-touch provisioning**—Supports zero-touch provisioning (ZTP), which enables you to automate provisioning and deployment with minimal manual intervention. This helps save time and accelerate deployments.

ACX7509 Router Configurations

Table 1 on page 4 lists the two hardware configurations for an ACX7509 router—ACX7509-BASE configuration and ACX7509-PREMIUM configuration—and the components included in each configuration.

Table 1: ACX7509 Router Hardware Configurations

Router Configuration	Configuration Components	First Junos OS Evolved Release
ACX7509-BASE	Chassis with midplane	21.4R1
	One ACX7509-RCB	
	One ACX7509-FEB	
	Two fan trays	
	Two 3KW-AC-AFO or 3KW-DC-AFO power supply units	
	One Cable management system	
	Blank panels for empty power supply slots	

Table 1: ACX7509 Router Hardware Configurations *(Continued)*

Router Configuration	Configuration Components	First Junos OS Evolved Release
	Blank panels for empty RCB, FEB, and FPC slots	
ACX7509-PREMIUM (redundant configuration)	Chassis with midplane	21.4R1
	Two ACX7509-RCBs	
	Two ACX7509-FEBs	
	Two fan trays	
	Four 3KW-AC-AFO or 3KW-DC-AFO power supply units	
	One Cable management system	
	Blank panels for empty FPC slots	

NOTE: You can install up to eight Flexible PIC Concentrators (FPCs) in the router.

NOTE: FPCs are not part of the ACX7509-BASE or ACX7509-PREMIUM configuration. You must order them separately.

Field-Replaceable Units in ACX7509 Routers

Field-replaceable units (FRUs) are components that you can replace at your site. Following are the two types of the ACX7509 router FRUs:

- Hot-insertable and hot-removable—You can remove and replace these components without powering off the router or disrupting the routing function.

- Hot-pluggable—You can remove and replace these components without powering off the router, but the routing function is interrupted until you replace the component.

Table 2 on page 6 lists the FRUs and their types.

Table 2: FRUs in an ACX7509 Router

FRU	Type
Power supplies	Hot-insertable and hot-removable.
Fan trays	Hot-insertable and hot-removable.
Air filter	Hot-insertable and hot-removable.
Routing and Control Board (RCB)	ACX7509-BASE configuration: • Removal of the RCB causes the router to shut down. You can install a replacement RCB in the second slot. The system restarts to select a primary and backup. If necessary, you can switch the primary and backup using the **request chassis routing-engine primary switch** command. • You can also switch the primary and backup using the following configuration commands: **set chassis redundancy routing-engine 1 primary** and **set chassis redundancy routing-engine 0 backup** ACX7509-PREMIUM configuration: • Primary RCB is hot-pluggable. • Backup RCB is hot-insertable and hot-removable.

Table 2: FRUs in an ACX7509 Router *(Continued)*

FRU	Type
Forwarding Engine Boards (FEBs)	ACX7509-BASE configuration: • Removal of the FEB causes traffic loss. You can install a replacement FEB in the second slot. The system restarts to select a primary and backup. If necessary, you can switch the primary and backup using the **request chassis routing-engine master switch** command. • You can also replace the new FEB in same slot and reboot chassis or replace RCB and the new FEB to redundant slots and bring-up as primary pair. ACX7509-PREMIUM configuration: • Primary FEB is hot-pluggable. • Backup FEB is hot-insertable and hot-removable.
Flexible PIC Concentrators (FPCs)	Hot-pluggable We recommend that you take the FPCs offline before removing them. You can take FPCs offline by using the **request chassis fpc slot slot-number offline** command.
Optical transceivers	Hot-pluggable



CAUTION: Replace a failed power supply module (PSM) with a new PSM within three minutes of removal to maintain power redundancy. The router continues to operate with other PSMs running. Replace a failed fan tray with a new fan tray within one minute of removal to prevent the chassis from overheating.

When a power supply module (PSM) or a fan tray fails the router does not shut down but continues to operate for one hour with the other PSMs and fan tray running. Replace a failed PSM or fan tray with a new PSM or fan tray within three minutes of removal to maintain proper airflow in the chassis and prevent the chassis from overheating.

NOTE: If you add, change, or upgrade a hardware component with a third-party component, and if you have a Juniper J-Care service contract, register these hardware components at https://www.juniper.net/customers/csc/management/updateinstallbase.jsp. Failure to register third-party components can result in significant delays if you need replacement parts.

ACX7509 Router Hardware and CLI Terminology Mapping

Table 3 on page 8 describes the hardware terms used in ACX7509 router documentation and the corresponding terms used in the Junos OS Evolved CLI.

Table 3: CLI Equivalents of Terms Used in Documentation for ACX7509 Routers

Hardware Item (as Displayed in the CLI)	Description (as Displayed in the CLI)	Value (as Displayed in the CLI)	Item in Documentation	Additional Information
`Chassis`	ACX7509	–	Router chassis	See "ACX7509 Physical Specifications" on page 15
RCB *n*	Routing and Control Board	*n* is a value in the range of 0–1. Multiple line items appear in the CLI if more than one RCB is installed in the chassis.	-	See "ACX7509 Routing and Control Board" on page 37

Table 3: CLI Equivalents of Terms Used in Documentation for ACX7509 Routers *(Continued)*

Hardware Item (as Displayed in the CLI)	Description (as Displayed in the CLI)	Value (as Displayed in the CLI)	Item in Documentation	Additional Information
`FPC n`	Abbreviated name of the Flexible PIC Concentrator (FPC; an FPC is equivalent to a line card)	*n* is a value in the range of 0–7. The value corresponds to the line card slot number in which the line card is installed.	FPC or line card. (The router does not have actual FPCs. The line cards are the FPC equivalents on the router.)	https://www.juniper.net/documentation/us/en/software/junos/cli-evo/cli/topics/topic-map/junos-cli-operational-overview.html#id-interface-naming-conventions-used-in-the-junos-os-operational-commands
`FEB n`	Forwarding Engine Board (FEB)	Value of *n* is a value in the range of 0-1.		https://www.juniper.net/documentation/us/en/software/junos/cli-evo/cli/topics/topic-map/junos-cli-operational-overview.html#id-interface-naming-conventions-used-in-the-junos-os-operational-commands
`xcvr n`	Abbreviated name of the transceiver	*n* is a value equivalent to the number of the port in which the transceiver is installed.	Optical transceivers	-

Table 3: CLI Equivalents of Terms Used in Documentation for ACX7509 Routers *(Continued)*

Hardware Item (as Displayed in the CLI)	Description (as Displayed in the CLI)	Value (as Displayed in the CLI)	Item in Documentation	Additional Information
`PSU (n)`	One of the following: • JNP-3000W-AC-AFO • JNP-3000W-DC-AFO	*n* is a value in the range of 0–3. The value corresponds to the power supply slot number.	AC or DC power supply	One of the following: • "ACX7509 AC/HVDC Power Supply Description" on page 24 • "ACX7509 DC Power Supply Description " on page 31
`Fan tray`	JNP5700-FAN	Fan tray 0-1	Fan tray	"Cooling System and Airflow in ACX7509 Routers" on page 19

Hardware Redundancy of ACX7509 Router Components and Functionality

The following hardware components provide redundancy on ACX7509 routers:

- Routing and Control Board (RCB)—The ACX7509-RCB consolidates the Routing Engine function with the control plane function in a single unit. The ACX7509 router has one RCB in the ACX7509-BASE configuration and two RCBs in the ACX7509-PREMIUM configuration. Dual RCBs provide control plane redundancy.
- Forwarding Engine Boards (FEBs)—The ACX7509 router has one ACX7509-FEB in the ACX7509-BASE configuration and two ACX7509-FEBs in the ACX7509-PREMIUM configuration. Dual RCBs with dual FEBs provide control and data plane redundancy.

  In the ACX7509-BASE configuration if you install RCB in slot RCB0, FEB has to be installed in slot FEB0 for the router to boot properly.

  In the ACX7509-PREMIUM configuration, the RCB and FEB are logically paired 2x(1RCB + 1FEB) to support FEB datapath redundancy. The RCB in slot RCB0 is logically paired with the FEB in slot FEB0

and the RCB in slot RCB1 is logically paired with FEB in FEB1. The primary pair functions as an active-active pair and the redundant pair functions as an active-standby pair. If the active-active pair (or either of its components) fails, the active-standby pair takes over as the primary pair and functions as active-active pair.

The FEBs are not visible from the outside of the router chassis. You must remove one of the fan trays to see the FEBs. See "Remove a Fan Tray from the ACX7509 Router" on page 131.

- Power supply modules (PSMs)—The ACX7509 router is powered by 3000 W redundant hot-removable and hot-insertable pre-installed AC/high-voltage DC (HDVC) or DC power supplies. ACX7509-BASE configuration(One RCB and one FEB) requires 1 + 1 PSM redundancy and ACX7509-PREMIUM configuration requires 2+2 PSM redundancy. If you choose the ACX7509-BASE configuration, this can be connected to the same source or two separate sources for 1+1 redundancy. When you choose the ACX7509-PREMIUM configuration option, if you have the same power source you would need 2+1PSM redundancy and if you have two separate power sources, you would need 2+2 PSM redundancy.

  If any power supply module (PSM) fails, you can replace it without powering off or disrupting the routing function: the other PSMs will balance the electrical load without interruption. Each PSM has two outputs: 12 V and 12 V standby. Two counter-rotating fans in each PSM provide front to back cooling.

- Cooling system—The ACX7509 routers have two fan trays and each fan tray has 4 Counter rotating fans. If a fan rotor within a fan tray fails, a chassis alarm sounds. The router continues to operate with one failed rotor according to GR-63 specifications. If more than one fan rotor fails, or if you remove a fan tray, a chassis alarm sounds, and the router shuts down in 240 seconds. If you remove both fan trays, a chassis alarm sounds, the router temperature will reach hot/fire shut down thresholds, and the router shuts down within 10 seconds. Therefore, if any fan tray fails, you must replace the fan tray immediately to prevent a router shutdown.

ACX7509 System Software Overview

The ACX7509 router runs on Junos OS Evolved, which provides Layer 2 and Layer 3 switching, routing, and security services. Junos OS Evolved runs natively on Linux, giving it direct access to all Linux utilities and operations. This router is designed to be modular, allowing for upgrades to be done on a component-by-component basis without a system reboot. Only those components that are changed are restarted. Junos OS Evolved is easily portable, and minimal work is required to make it work on any platform. The Junos OS Evolved infrastructure is entirely modernized, giving you the high availability, portability, faster innovation, and simplified upgrades you need.

ACX7509 Chassis

SUMMARY

Learn about the ACX7509 router chassis, the field replaceable units (FRUs) and their physical specifications.

IN THIS SECTION

- ACX7509 Router Chassis | **12**
- ACX7509 Physical Specifications | **15**
- ACX7509 Router Midplane Description | **16**
- ACX7509 Cable Management System | **17**

ACX7509 Router Chassis

The router chassis is a rigid sheet metal structure that houses all the other components (see Figure 3 on page 13, Figure 4 on page 14, and Figure 5 on page 15). The chassis fits in standard 800-mm (or larger) enclosed cabinets, 19-in. equipment racks, or telco open-frame racks. You can install up to five routers in one standard (48 U) rack if the rack can support their combined weight, which can be greater than 1100 lb (500 kg). See "ACX7509 Physical Specifications" on page 15 for physical specifications of the ACX7509 Router.



CAUTION: Before removing or installing components of a router, attach an ESD strap to an ESD point and place the other end of the strap around your bare wrist. Failure to use an ESD strap can result in damage to the router.

WARNING: You must connect the router to an earth ground before you power it on and during normal operation.

Figure 3: Front View of a Fully Configured ACX7509 Router

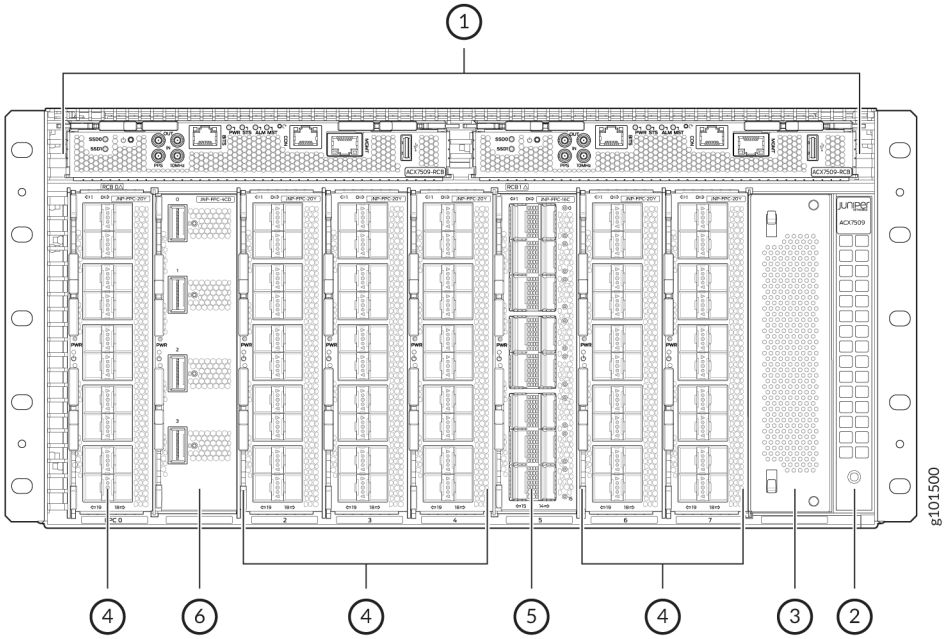

1– Routing and Control Boards (RCBs)	4– JNP-FPC-20Y
2– ESD point	5– JNP-FPC-16C

3– Blank panel (JNP5K-FPC-BLNK)	6– JNP-FPC-4CD

Figure 4: Rear View of an AC/HVDC-Powered ACX7509 Router

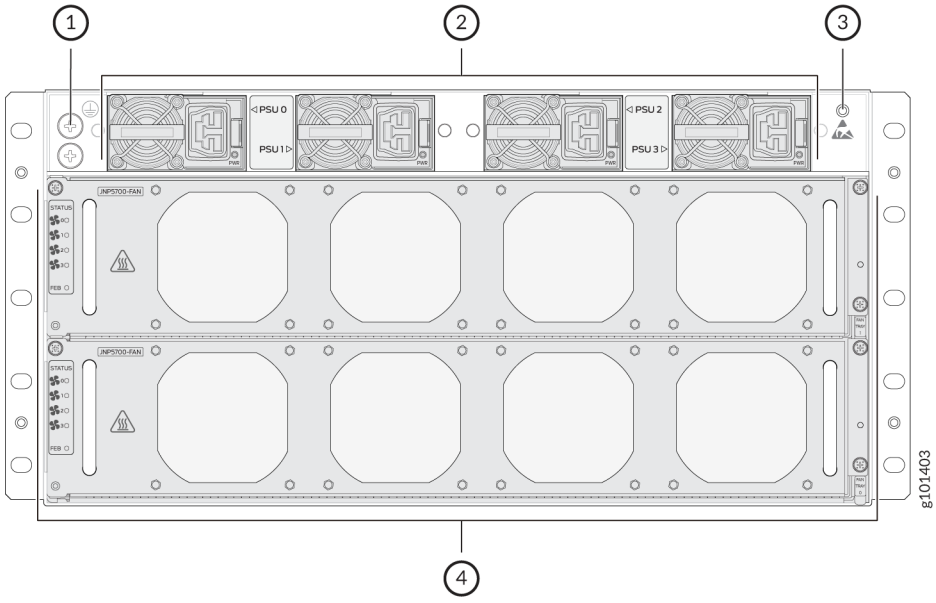

1– Grounding earth terminal	3– ESD point

2– AC/HVDC Power Supply Modules	4– Fan trays

Figure 5: Rear View of a DC-Powered ACX7509 Router

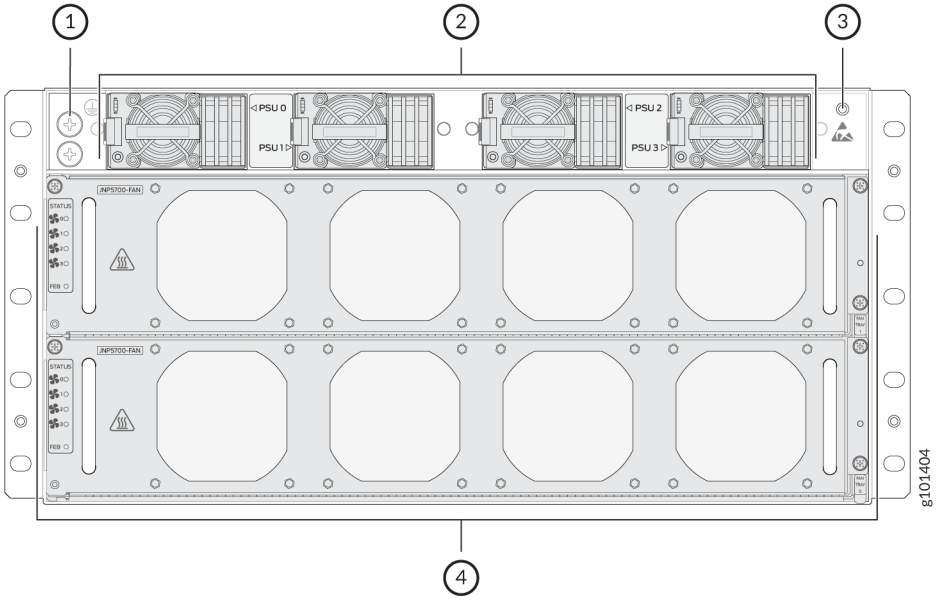

1– Grounding earth terminal	3– ESD point
2– DC Power Supply Modules	4– Fan trays

ACX7509 Physical Specifications

See Table 4 on page 15, which summarizes the physical specifications of the router chassis and its components.

The ACX7509 is a 5U modular chassis and with the cable management system it is 6U.

Table 4: ACX7509 Router Chassis and Component Physical Specifications

Description	Weight	Height	Width	Depth
Chassis	Chassis (Sheet metal and Midplane) - 50.26 lb (22.8 kg)	8.75 in. (22.2 cm)	19 in. (48.2 cm)	23.62 in. (60 cm)

Table 4: ACX7509 Router Chassis and Component Physical Specifications *(Continued)*

Description	Weight	Height	Width	Depth
	Fully loaded chassis (with the cable management system) - 175 lb (79.5 kg)	10.51 in. (26.7 cm), with the cable management system	19 in. (48.2 cm)	31.49 in. (80 cm), with the cable management system
ACX7509-RCB - Routing and Control Board (RCB)	2.64 lbs (1.2 kg)	1.22 in. (3.1 cm)	8.42 in. (21.4 cm)	9.25 in. (23.5 cm)
ACX7509-FEB - Forwarding Engine Boards (FEBs)	14.5 lbs (6.6 kg)	3.3 in. (8.4 cm)	17.20 in. (43.7 cm)	11.06 in. (28.1 cm)
JNP-FPC-16C	4.4 lbs (2 kg)	1.77 in. (4.5 cm)	7.08 in. (18 cm)	10.15 in. (25.8 cm)
JNP-FPC-20Y	4.4 lbs (2 kg)	1.77 in. (4.5 cm)	7.08 in. (18 cm)	10.15 in. (25.8 cm)
JNP-FPC-4CD	4.4 lbs (2 kg)	1.77 in. (4.5 cm)	7.08 in. (18 cm)	10.15 in. (25.8 cm)
AC power supply	3.3 lbs (1.5 kg)	1.73 in. (4.4 cm)	2.91 in. (7.4 cm)	12.40 in. (31.5 cm)
DC power supply	3.3 lbs (1.5 kg)	1.73 in. (4.4 cm)	2.91 in. (7.4 cm)	13.11 in. (33.3 cm)
Fan tray	7 lbs (3.2 kg)	3.34 in. (8.5 cm)	5.35 in. (13.6 cm)	17.32 in. (44 cm)

ACX7509 Router Midplane Description

The midplane is located on the rear of the chassis and forms the rear of the card cage. You install the Routing and Control Boards (RCBs) and the Flexible PIC Concentrators (FPCs) in the midplane from the

front of the chassis. You install the Forwarding Engine Boards (FEBs), power supply units, and the fan trays in the midplane from the rear of the chassis.

The midplane performs the following major functions:

- Distributes power—The power supplies connect to the midplane, which distributes power to all the router components.
- Provides a signal path—The midplane provides the signal path to the FPCs, RCBs, FEBs, and other system components for system monitoring and control.

ACX7509 Cable Management System

The ACX7509 routers supports the cable management system. It can be used for both ACX7509-BASE and ACX7509-PREMIUM configurations.

For ACX7509 routers you can use the cable management system to organize, support, and provide strain relief for the cables connected to the Routing and Control Boards (RCBs) and Flexible PIC Concentrators (FPCs). The cable management system helps you maximize airflow through the chassis by using cable ties or strips to organize the cabling.

NOTE: You need to necessarily attach the Cable manager system when you install seven or more line cards of the same model.

Figure 6: ACX7509 Cable Management System

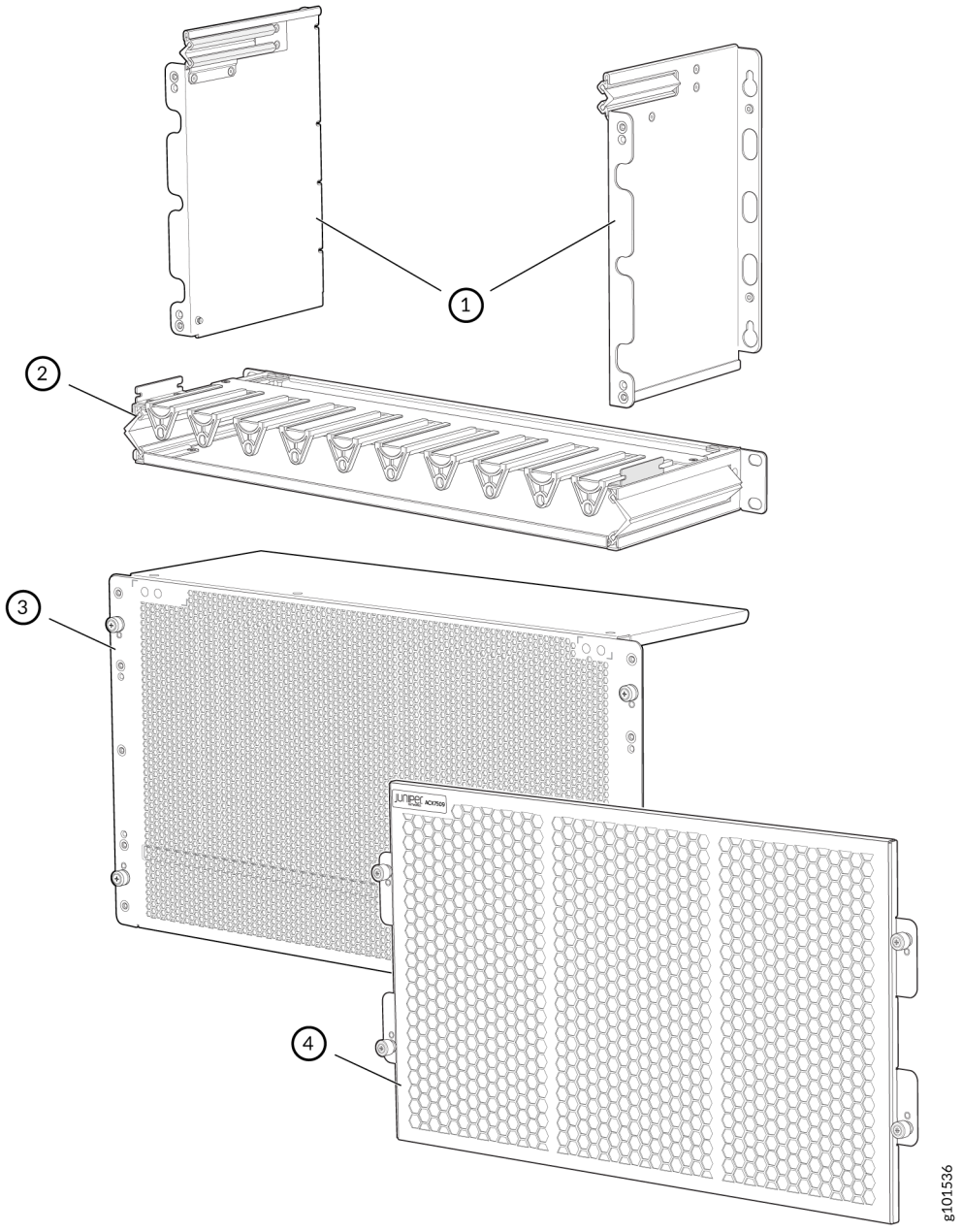

1– Left and right side covers	3– Cable manager door
2– Fiber management tray	4– Air filter door

Cooling System and Airflow in ACX7509 Routers

IN THIS SECTION

- Fan Trays | **20**
- Fan Status LEDs | **21**
- Airflow | **22**
- Air Filter Unit | **22**
- Power Supply Cooling System | **23**

The cooling system components work together to keep all router components within the acceptable temperature range.

When the router is operating normally, the fans function at lower than full speed. If a fan fails or the ambient temperature rises above a threshold, the speed of the remaining fans is automatically adjusted to keep the temperature within the acceptable range. If the maximum temperature specification is exceeded and the system cannot be adequately cooled, the Routing and Control Board (RCB) shuts down some or all of the hardware components.

The cooling system consists of the following components:

- Fan trays
- Airflow
- Air filter unit
- Power supply cooling system

Fan Trays

The ACX7509 router has two hot-insertable and hot-removable field-replaceable fan trays that sit at the rear of the router (See Figure 7 on page 20). The fan trays plug onto the midplane of the chassis through the fan tray extension card. Each fan tray contains these parts:

- Four dual-rotor, counter-rotating fans
- A fan controller card
- Five STATUS LEDs: Four LEDs with the fan symbol indicate the operating condition of the counter-rotating fans and the fifth FEB LED indicates the operating condition of the Forwarding Engine Board (FEB) installed in the FEB slot behind the fan tray. See Figure 8 on page 21.

Figure 7: Fan Tray

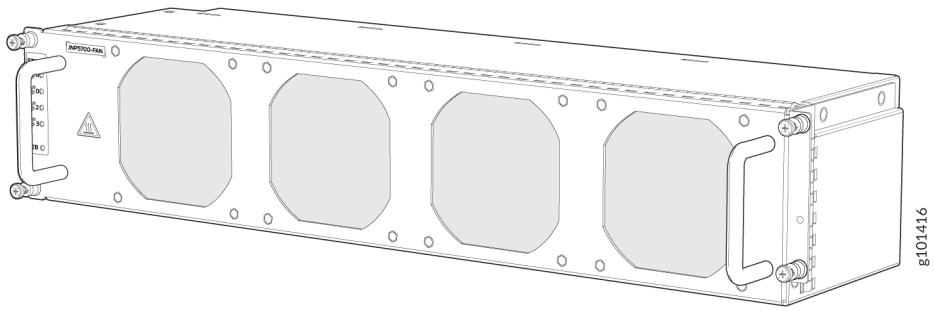

Fan Status LEDs

Each fan has one bicolor LED. See Figure 8 on page 21

Figure 8: Fan Status LEDs

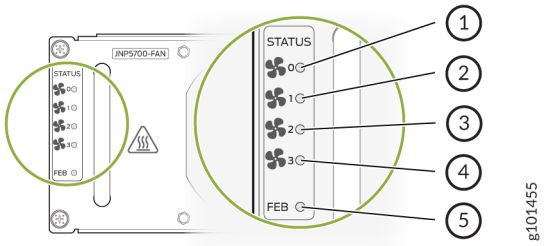

- **1** - **4** - Status of the four dual-rotor, counter-rotating fans
- **5** - Status of the FEB behind the fan tray

Table 5 on page 21 describes the behavior of the fan and FEB LEDs.

Table 5: Fan Status and FEB Status LEDs

Label	Color	State	Description
STATUS (Fan status)	Green	Blinking	Fan hardware initialization is complete. Software initialization is pending
		On steadily	Software initialization is complete, and the fan is functioning normally
	Yellow	On steadily	Equipment is faulty and malfunctioning
	Dark	Off	Fan tray input power failure
FEB (FEB status)	Green	Blinking	The FEB is booting

Table 5: Fan Status and FEB Status LEDs *(Continued)*

Label	Color	State	Description
		On steadily	The FEB is online and functioning normally
	Yellow	On steadily	The FEB has failed
	Dark	Off	The FEB is offline

Airflow

The router has a front-to-back (AIR OUT) cooling system (see Figure 9 on page 22). Air is pulled through the front of the chassis toward the fan trays, which exhaust the air out of the router.

Figure 9: Airflow Through the Chassis

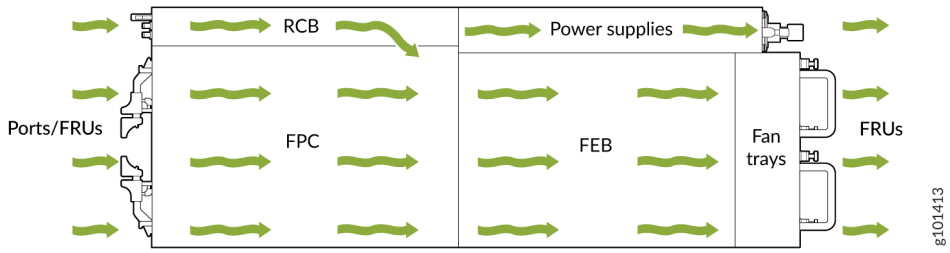

Air Filter Unit

The air filter unit consists of three parts: the outer filter cover, the air filter, and the inner cage. The air filter sits right inside the outer filter cover and the inner cage. The air filter unit is installed into the cable management brackets and is secured to the brackets by captive screws.

NOTE: You must replace the air filter every 6 months.

Power Supply Cooling System

The power supplies are self-cooling and are located in the rear of the router.

There are multiple airflow ducts on the front of the chassis that provide fresh air to the PSMs to maintain the thermal requirements.

ACX7509 Power System

SUMMARY

The ACX7509 power system includes AC/HDVC power supplies and related power cords and cables, DC power supplies and related cords and cables, and cable lugs. The power supplies operate within specified ranges and are equipped with alarms and indicators.

IN THIS SECTION

- ACX7509 AC/HVDC Power Supply Description | 24
- ACX7509 DC Power Supply Description | 31

The ACX7509 router is powered by 3000 W redundant hot-removable and hot-insertable pre-installed AC/high-voltage DC (HDVC) or DC power supplies. ACX7509-BASE configuration(One RCB and one FEB) requires 1 + 1 PSM redundancy and ACX7509-PREMIUM configuration requires 2+2 PSM redundancy. If you choose the ACX7509-BASE configuration, this can be connected to the same source or two separate sources for 1+1 redundancy. When you choose the ACX7509-PREMIUM configuration option, if you have the same power source you would need 2+1 PSM redundancy and if you have two separate power sources, you would need 2+2 PSM redundancy. If any power supply unit fails, you can replace it without powering off or disrupting the routing function, the other power supply units will balance the electrical load without interruption. Each power supply unit has two outputs: 12 V and 12 V standby. Two counter-rotating fans in each power supply unit provide front to back cooling.

The input voltages are as follows:

- AC input voltage range: 200–277 V/50–60 Hz, 20A current

- HVDC input voltage range: 240–280 V, 20A current
- DC input voltage range: 40 volts direct current (VDC) Min, 72 VDC maximum, 80A current

CAUTION: Do not mix AC/HDVC and DC power supplies in the same chassis.

NOTE: AC PSMs do not support AC low line of 110V.

NOTE: BASE configuration routers are shipped with blank panels installed over the two empty power supply slots.

ACX7509 AC/HVDC Power Supply Description

IN THIS SECTION

- ACX7509 AC/HVDC Power Specifications | **25**
- ACX7509 AC/HVDC Power Supply LED | **26**
- ACX7509 AC/HVDC Power Cord Specifications | **27**

The input power to the AC/HVDC power supplies can be AC power or HVDC power. The power supplies automatically detect AC or HVDC input voltage and manage the power accordingly. AC power can be 180–305 volts alternating current (VAC) input voltage and HVDC power can be 190–400 VDC

input voltage. Each 3000- W AC/HVDC PSM has a single AC or HVDC input and provides 12 V power to the system. Figure 10 on page 25 shows the AC/HVDC power supply.

Figure 10: ACX7509 AC/HVDC Power Supply

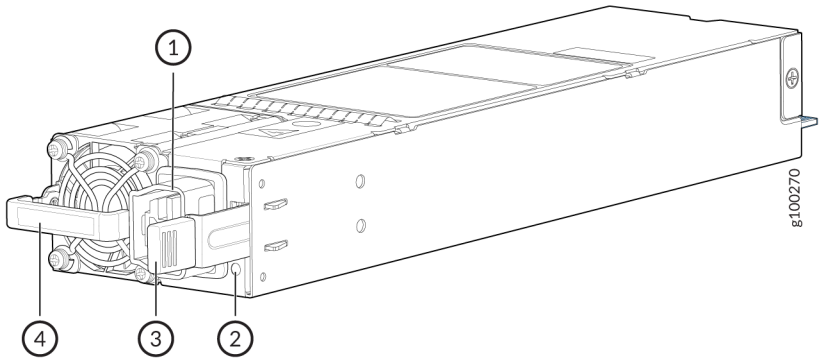

1– Power plug connector	3– Ejector lever
2– Status LED	4– Orange handle

ACX7509 AC/HVDC Power Specifications

The ACX7509 operates within the AC/HVDC input voltage range listed in Table 6 on page 25.

Table 6: ACX7509 AC/HVDC Power Specifications

Parameter	Minimum	Rated	Maximum
Input voltage (AC)	180 VAC	200–277 VAC	305 VAC
Input voltage (HVDC)	190 VAC	240–380 VDC	400 VDC
AC input line frequency	47 Hz	50–60 Hz	63 Hz

ACX7509 AC/HVDC Power Supply LED

Each ACX7509 AC/HVDC PSM has a status LED on the module faceplate. See Figure 11 on page 26.

Figure 11: ACX7509 AC/HVDC Power Supply LED

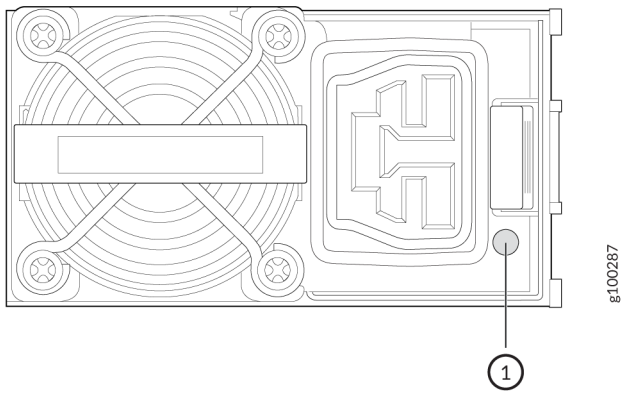

1– Power supply LED

The ACX7509 router AC/HVDC PSM uses an amber and green bi-color LED to indicate the operating state. See Table 7 on page 26.

Table 7: ACX7509 AC/HVDC Power Supply LED States

PSM State	Green LED	Amber LED
The PSM is on and operating properly.	On	Off
One or both power supplies lack AC power.	Off	Off
The PSM shut down due to a critical event such as high temperature, high power, high current, or fan failure.	Off	On

Table 7: ACX7509 AC/HVDC Power Supply LED States *(Continued)*

PSM State	Green LED	Amber LED
The PSM is operating but indicates a warning event such as high temperature (inlet temperature greater than 53 degrees or a hot spot temperature greater than 95 degrees), high power, high current, or slow fan (less than 1200 rpm).	Off	Blinking
The PSM output disabled by system software or other PSM in chassis on with 12VSB (vestigial sideband).	Blinking	Off
The AC power cord is unplugged.	Off	On

You can get additional information about the status of the PSMs using the **show chassis power** command and the **show chassis power** detail command.

ACX7509 AC/HVDC Power Cord Specifications

Detachable AC power cords are shipped with the AC power supplies. The plug end of the power cord fits into the power source outlet that is standard for your geographical location.

NOTE: In North America, AC power cords must not exceed 14.75 feet (approximately 4.5 meters) in length, to comply with National Electrical Code (NEC) Sections 400-8 (NFPA 75, 5-2.2) and 210-52 and Canadian Electrical Code (CEC) Section 4-010(3). The cords that you can order for the ACX7509 router comply with those codes.

Table 8 on page 28 provides right-angle power cord specifications for specific country or region. You can install this cable in the ACX7509 router that is installed in a rack with limited space.

Table 8: ACX7509 Right-Angle Power Cord Specifications

Locale	Cord Set Rating	Plug Standards	Spare Juniper Model Number
Japan	20 A, 250 VAC	L6-20	CBL-JNP-SDG4-JPL
Taiwan	20 A, 250 VAC	L6-20	CBL-JNP-SDG4-TW
USA	30 A, 250 VAC	L6-30	CBL-JNP-SDG4-US-L6
Europe	25 A, 300 VAC (cable)	332P6S	CBL-JNP-PWR-EU
USA	30 A, 277 VAC	L7-30	CBL-JNP-SDG4-US-L7
India	20 A, 250 VAC (cable)	332P6S	CBL-JNP-SDG4-IN
South Korea	25 A, 250 VAC (cable)	332P6S	CBL-JNP-SDG4-SK

NOTE: When you install a right-angle power cord on a ACX7509 router, the chassis depth is 800 mm including the cable bend radius and 850 mm when you install the straight power cord.

Table 9 on page 28 provides AC power cord (straight) specifications for each country or region.

Table 9: ACX7509 Power Cord (Straight) Specifications

Locale	Cord Set Rating	Plug Standards	Spare Juniper Model Number	Graphic
Argentina	16 A, 250 VAC	IRAM 2073 Type RA/3	CBL-JNP-SG4-AR	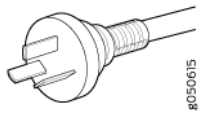

Table 9: ACX7509 Power Cord (Straight) Specifications *(Continued)*

Locale	Cord Set Rating	Plug Standards	Spare Juniper Model Number	Graphic
Australia and UK	16 A, 250 VAC	IEC 60309	CBL-JNP-SG4-316P6W	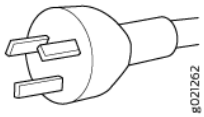
Brazil	16 A, 250 VAC	NBR 14136 Type BR/3	CBL-JNP-SG4-BR	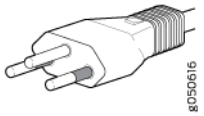
China	16 A, 250 VAC	GB2099-1	CBL-JNP-SG4-CH	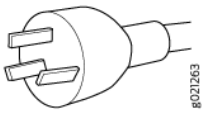
China and Japan	16 A, 250 VAC	C20 to Anderson 3-5958p4	CBL-JNP-SG4-C20-CH	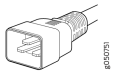
Europe (except Italy, Switzerland, and the United Kingdom)	16 A, 250 VAC	CEE 7/7 STRAIGHT	CBL-JNP-SG4-EU	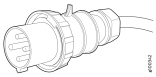
India/SA	16 A, 250 VAC	SANS 164/1	CBL-JNP-SG4-SA	
Israel	16 A, 250 VAC	SI 32/1971 Type IL/3G	CBL-JNP-SG4-IL	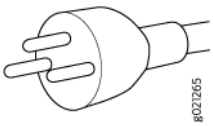

Table 9: ACX7509 Power Cord (Straight) Specifications *(Continued)*

Locale	Cord Set Rating	Plug Standards	Spare Juniper Model Number	Graphic
Italy	16 A, 250 VAC	CEI 23-16	CBL-JNP-SG4-IT	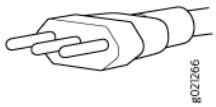
Japan	20 A, 250 VAC	L6-20	CBL-JNP-SGD4-JPL	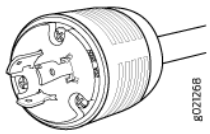
North America	20 A, 250 VAC	C20 to Anderson 3-5958p4	CBL-JNP-SG4-C20	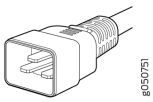
North America	20 A, 250 VAC	Locking NEMA L6-20P	CBL-JNP-SG4-US-L	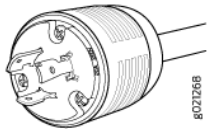
North America	16 A, 250 VAC	NEMA 6-20P	CBL-JNP-SG4-US	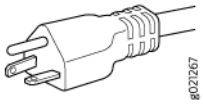
North America	20 A, 277 VAC	NEMA I7-20P	CBL-JNP-SG4-HVAC	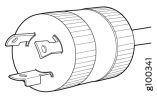
Central Europe	16 A, 250 VAC	SEV1011	CBL-JNP-SG4-SZ	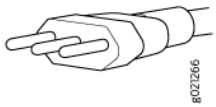
USA	20 A, 250 VAC	IEC 320 P6	CBL-JNP-SG4-320P6W	

NOTE: You must provide 16 A circuit breaker to the 16 A power cord connected to AC mains of each power supply.

Table 10: ACX7509 HVDC Cable Specifications (Bare Wire)

Cable	Cord Set Rating	Spare Juniper Model Number
HVDC power cord	30 A, 400 VDC (Open ended power cord)	CBL-PWR2-BARE

NOTE: The insulation color for wires in the HVDC cables are color coded. Green is ground, black is line, and white is neutral. For HVDC, the black and white wires are not polarity-sensitive. The black wire can be positive (+) or neutral (–), and the white wire can be positive (+) or negative (–).

ACX7509 DC Power Supply Description

IN THIS SECTION

- ACX7509 DC Power Supply LED | 33
- ACX7509 DC Input Current Selector | 34
- ACX7509 Input DC Voltage Specification | 34
- 60 A Input Feed Power Management | 35
- ACX7509 DC Power Cables | 35
- ACX7509 DC Power Cable Lugs | 36

The ACX7509 DC power supplies are hot-removable and hot-insertable field-replaceable units (FRUs). Each 3000 W PSM has a single DC input and provides 12 VDC output with a standby voltage of 12 VDC. The ACX7509 DC power supplies can operate with an input current of 80 A or 60 A.

CAUTION: Do not mix AC/HVDC and DC power supplies in the same chassis.

Figure 12: ACX7509 DC Power Supply

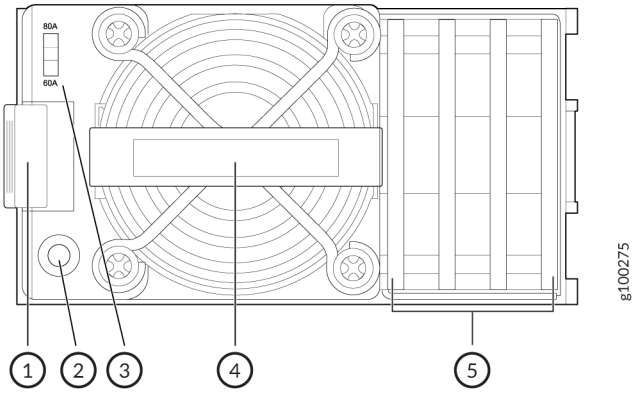

1– Ejector lever	4– Handle
2– Status LED	5– Terminal block cover
3– DC input current selector (DIP switch)	

ACX7509 DC Power Supply LED

Each ACX7509 DC PSM has a status LED on the PSM faceplate. See Figure 13 on page 33.

Figure 13: ACX7509 DC Power Supply Status LED

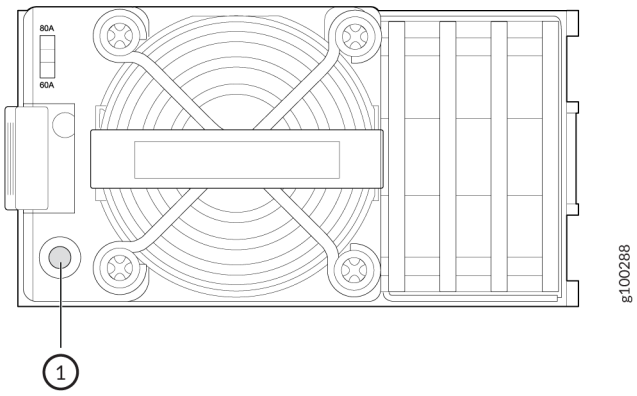

1– Power supply status LED

Use Table 11 on page 33 to interpret the state of the PSM status LED.

Table 11: ACX7509 DC Power Supply LED

LED Color	Power Supply State
Off	The power supplies do not have DC power
Solid green	The PSM is on and in the OK state
Blinking green	The PSM output disabled by system software or other PSU in chassis ON with 12VSB.
Solid amber	The DC power cord is unplugged, but the second PSM still has DC power.
Blinking amber	The PSM is operating, but there are warning events. Possible causes include high temperature, high power, high current, or a slow fan.

You can get additional information about the status of the PSMs using the **show chassis power** command and **show chassis power** detail command.

ACX7509 DC Input Current Selector

The ACX7509 DC PSM can operate with an input current of 80 A or 60 A. You select the input rating by moving the DC input current selector (DIP switch) to the desired setting. If you select 60 A, the PSM limits the output power so that the input current does not exceed 60 A under normal steady-state operation. If you select 80 A, the PSM limits the output power so that the input current does not exceed 80 A.

For example:

If you select...	Then...
60 A	The PSM limits the output power to 2200 W when the input voltage is between 40V and 48V. It linearly increases the output power if the input voltage increases. The PSM provides 2700 W output power when the input voltage is between 48V and 72V.
80 A	The PSM provides 3000 W output power throughout the input voltage range from 40 VDC to 72 VDC.

ACX7509 Input DC Voltage Specification

The ACX7509 DC PSMs operate within the DC input voltage range listed in Table 12 on page 35.

NOTE: Depending on the available input source, Juniper recommends that the 48-VDC facility DC source be equipped with a 2 pole circuit breaker rated at a minimum of 60 A (48 VDC) or 80 A (48 VDC) based on DIP switch current setting, or as required by local code.

Table 12: ACX7509 DC Power Specifications

Input Switch Setting	Minimum Input DC Voltage	Rated Input DC Voltage	Maximum Input DC Voltage	Maximum Input DC Current	Maximum Output Power
60 A	40 VDC	48 VDC to 60 VDC	72 VDC	60 ADC	2700 W
80 A	40 VDC	48 VDC to 60 VDC	72 VDC	90 ADC	3000 W

60 A Input Feed Power Management

The 60 A DC PSM capacity changes when the input voltage is below or above the under-voltage limit, as follows:

- When the 60 A DC PSM input voltage is above the input under-voltage warning limit, its capacity is 2700 W.
- When the input voltage is below the input under-voltage warning limit, the PSM capacity is reduced to 2200 W.

When the input voltage is above the input under-voltage warning limit, the software adjusts the system capacity and reallocates power to the FRUs based on the new system capacity.

ACX7509 DC Power Cables

You must supply DC power cables that meet the specifications required by the local code, laws, and standards. The wire insulation is color coded. Green is ground, black is line, and white is neutral. The wires are labeled **(+)** and **(–)** to indicate their polarity.

CAUTION: You must ensure that power connections maintain the proper polarity.

WARNING: For field-wiring connections, use copper conductors only.

WARNING: Make sure that DC power cables do not block access to ACX7509 components or lie on the ground where people can trip on them.

ACX7509 DC Power Cable Lugs

The accessory box shipped with the ACX7509 router includes the cable lugs that attach to the terminal studs of each PSM. (The cable lug shown in Figure 14 on page 36 is also used for grounding the chassis.) The cable lugs are dual hole and sized to fit 1/4-20 UNC terminal studs at 15.86-mm (0.625-in.) center line.

Figure 14: ACX7509 DC Power Cable Lugs

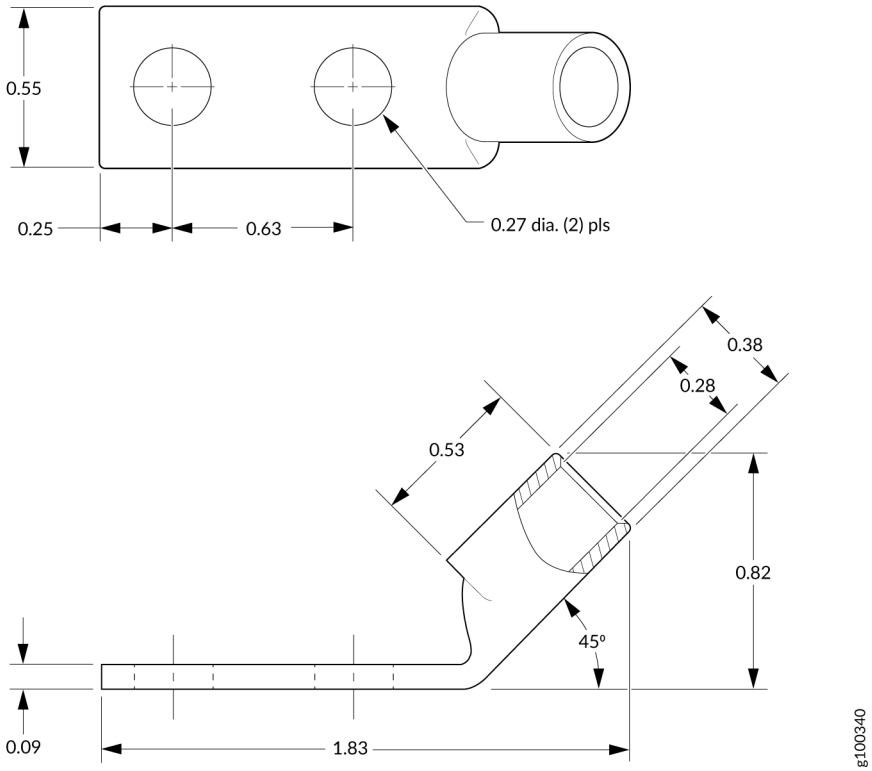

CAUTION: Before you begin to install the ACX7509 router, have a licensed electrician attach a cable lug to the power cables that you supply. A cable with an incorrectly attached lug can damage the ACX7509 router.

ACX7509 Routing and Control Board

IN THIS SECTION

- Routing and Control Board Front Panel | 39
- Routing and Control Board LEDs | 40

The ACX7509-RCB Routing and Control Board (RCB) provides routing protocol processes and software processes that control the router's interface, the chassis components, system management functions, and user access to the router.

The RCB is an integrated board and a single field-replaceable unit (FRU) that provides Routing Engine and Control Board (CB) functionality. The Routing Engine performs all route-processing functions, whereas the CB performs chassis control and management plane functionality. The RCB provides control plane functions.

You can install one or two RCBs on the ACX7509 router. The base configuration ships with one RCB, and a redundant configuration ships with two RCBs. When two RCBs are installed, one functions as the primary RCB and the second functions as a backup RCB. If you remove the primary RCB and have configured graceful Routing Engine switchover (GRES), the backup RCB becomes the primary RCB.

Figure 15: Routing and Control Board

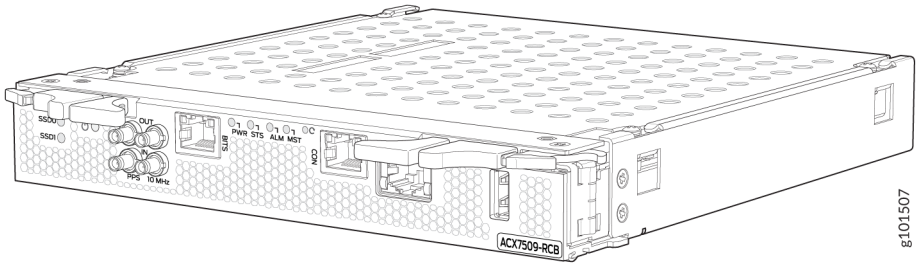

The RCB integrates the control plane and Routing Engine functions into a single management unit. Each RCB provides all the functions needed to manage the chassis operation:

- System control functions such as environmental monitoring
- Routing Layer 2 and Layer 3 protocols

- Communication to all components such as FPCs, FEBs, power, and cooling
- Transparent clocking
- Alarm and logging functions

Table 13 on page 38 summarizes the physical specifications of the RCB.

Table 13: Physical Specifications of an RCB

Description	Value
Height	1.22 in. (3.1 cm)
Width	8.42 in. (21.4 cm)
Depth	9.25 in. (23.5 cm)
Weight	2.64 lbs (1.2 kg)
Power requirement	• At 25°C (Typical) - 60W • At 55°C (Maximum) - 70W

Each RCB includes the following internal components:

- CPU—High-performance 2.9-GHz Intel 6 Core X86 CPU
- DRAM—64-GB DDR4 RAM
- Solid-state drive (SSD)—Two 100-GB SATA SSDs

Routing and Control Board Front Panel

Figure 16 on page 39 shows the front panel of the ACX7509 RCB.

Figure 16: ACX7509 RCB Front Panel

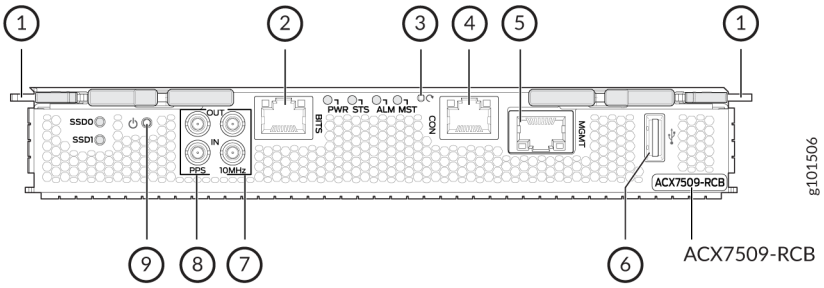

1– Ejector handles	6– USB port
2– **BITS** clock port with LEDs	7– **10MHz** IN/OUT ports
3– Reset button	8– **PPS** IN/OUT port
4– Console (**CON**) port	9– Online/Offline button
5– Management (**MGMT**) port	

The ports located on the RCB connect the RCB to one or more external devices on which system administrators can issue Junos OS Evolved CLI commands to manage the router. In addition, the RCB includes ports that you use to connect external clock interfaces for BITS and GPS functions.

The RCB interface ports with the indicated labels function as follows:

- **CON**—Connects the RCB to a system console through a serial cable with an RJ-45 connector.
- **MGMT**—Connects the RCB through an Ethernet connection to a management LAN (or any other device that plugs into an Ethernet connection) for out-of-band management. The port uses an autosensing RJ-45 connector to support 10-Mbps, 100-Mbps, or 1000-Mbps connections. Two small LEDs (an activity LED and a link LED) on the port indicate that the connection is in use.

  The link LED is:

  - Green (steady) when the 1000-Mbps link is up.
  - Orange (steady) when the 10/100-Mbps link is up.
  - Off when the link is down.

  The activity LED is:

  - Green (blinking) when traffic is passing through the port.
  - Off when traffic is not passing through the port.

  Both activity and link LEDs are off when the link is down.

- **BITS**—Building-integrated timing system (BITS) is the external clocking interface for connecting to external clocking devices.
- **10MHZ** (one input and one output)—The 10-MHz timing connectors on the front panel of the router connect to external clock signal sources. The clocking ports provide the synchronized output clocks from any one of the reference clock inputs, based on the clock's priority.
- **PPS** (one input and one output)—1-pulse-per-second (PPS) connector on the front panel of the router connects to external clock signal sources. The clocking ports provide the synchronized output clocks from any one of the reference clock inputs, based on the clock's priority.
- USB—Provides a removable media interface through which you can install Junos OS Evolved manually. Junos OS Evolved supports USB version 2.0 and later.

The following buttons are located on the RCB:

- RESET button—When pressed, reboots the RCB as follows:
  - Short press reboots the RCB and the reset-reason logs the button press event. The press event is logged in the RCB FPGA register.
  - When pressed for more than 10 seconds, the RCB reboots with an option for BIOS recovery.
- Online/Offline button—When the RCB is offline and if the button is pressed (short press), the RCB starts booting. When the RCB is online and if the button is pressed for four seconds or more (long press), the RCB shuts down.

Routing and Control Board LEDs

The LEDs—labeled SSD0, SSD1, PWR, STS, ALM, and MST—are located on the faceplate of the RCB.

The RCB controls the ACX7509 router, and the LEDs on the RCB display the status and functioning of the ACX7509 chassis. See Table 14 on page 41.

Table 14: ACX7509 RCB LEDs

LED	Color	State	Description
SSD0 and **SSD1**	Green	On steadily	The drive is detected.
	Green	Blinking	The drive is active.
PWR	Green	On steadily	The RCB is receiving adequate power.
		Blinking	The beacon feature is enabled.
	Dark	Off	The RCB is booting.
STS	Green	On steadily	The RCB is online and functioning correctly.
	Green	Blinking	The beacon feature is enabled.
	Yellow	On steadily	The RCB is booting.
	Yellow	Blinking	An error has been detected in the RCB.
	Dark	Off	The power supply is switched off.
ALM	Dark	Off	The router is halted, or there is no alarm.

Table 14: ACX7509 RCB LEDs *(Continued)*

LED	Color	State	Description
	Red	On steadily	A major hardware fault has occurred, such as a temperature alarm or power failure, and the router has halted (except during a single rotor failure in a fan module). Switch off power to the router and unplug the power cords. Correct any voltage or site temperature issues, and allow the router to cool down. Power on the router, and monitor the power supply and fan LEDs to determine where the error is occurring.
		Blinking	Indicates the presence of a major and a minor alarm.
	Yellow	On steadily	A minor alarm has occurred, such as a software error. Switch off power to the router and unplug the power cords. Power on the router, and monitor the status LEDs to ensure that Junos OS Evolved boots up properly.
	Red+Yellow	Blinking	Indicates the presence of a major and a minor alarm.

Table 14: ACX7509 RCB LEDs *(Continued)*

LED	Color	State	Description
MST	Green	On steadily	This RCB is the primary RCB.
	Dark	Off	This RCB is the backup RCB.
BITS	Green	On steadily	The BITS external clocking interface is active.
	Yellow	On steadily	The BITS external clocking interface has failed.

ACX7509 Forwarding Engine Board

IN THIS SECTION

- ACX7509-FEB LEDs | **45**

The ACX7509 router supports two **ACX7509-FEB** Forwarding Engine Boards (FEBs). You install FEBs horizontally, mid-chassis, between the Flexible PIC Concentrators (FPCs) and the Routing and Control Boards (RCBs) in the front and the fan trays in the rear. FEBs are hot-removable and hot-insertable field-replaceable units (FRUs) that are not visible from the outside of the router chassis. You must remove one of the fan trays to see the FEBs.

FEBs receive signals from the midplane of the chassis and process these signals for packet forwarding. The midplane allows any FEB to carry traffic for any FPC.

The ACX7509-FEB design employs two forwarding ASIC's for packet processing and traffic management. Each forwarding ASIC support 2.4Tbps throughput. The ACX7509-FEB support 4.8Tbps throughput, with over subscription upto 6.2Tbps.

Figure 17: ACX7509-FEB

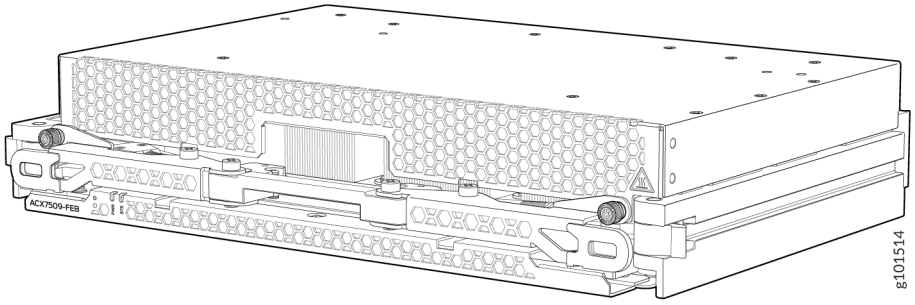

Table 15: ACX7509-FEB Specifications

Specification	ACX7509-FEB
Software release	Junos OS Evolved 21.4R1
Supported FPCs	1. JNP-FPC-4CD 2. JNP-FPC-16C 3. JNP-FPC-20Y
Number of FEBs required for operation	ACX7509-BASE systems: one FEB ACX7509-PREMIUM systems: two FEBs
Height	19.7 in. (50.04 cm)
Width	1.8 in. (4.57 cm)
Depth	10.4 in. (26.42 cm)
Weight	14.8 lb (6.71 kg)

Table 15: ACX7509-FEB Specifications *(Continued)*

Specification	ACX7509-FEB
Power requirement	• With 50% load at 25°C (Typical) - 356W • With 100% load at 55°C (Maximum) - 468W

ACX7509-FEB LEDs

The Forwarding Engine Boards (FEBs) have two status LEDs. See Figure 18 on page 45.

Figure 18: FEBs LEDs

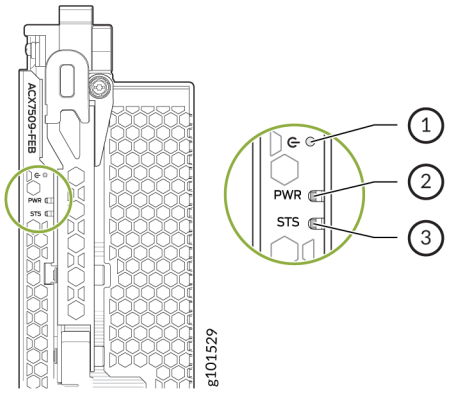

1– Online/Offline button	3– **STS** FEB status LED
2– **PWR** status LED	

Table 16 on page 45 describes the functions of FEB LEDs and the Online/Offline button.

Table 16: FEB LEDs and Online/Offline Button

Label	Color	State	Description
PWR (Power)	Green	On steadily	The FEB is receiving power.

Table 16: FEB LEDs and Online/Offline Button *(Continued)*

Label	Color	State	Description
	Yellow	On steadily	The FEB is receiving power but a power fault occurred.
	Dark	Off	The FEB is either offline or not receiving power.
STS (Status)	Green	On steadily	The FEB is online and functioning normally.
		Blinking	The FEB is booting or going offline.
	Yellow	On steadily	The FEB has failed.
	Dark	Off	The FEB is offline.
Online/Offline button	-	-	You can use this button to power on/off the FPC.

ACX7509 Flexible PIC Concentrators

SUMMARY

The JNP-FPC-20Y, JNP-FPC-16C, and JNP-FPC-4CD Flexible PIC Concentrators (FPCs) in an ACX7509 router send and receive packets.

IN THIS SECTION

- The JNP-FPC-20Y Flexible PIC Concentrator | **49**
- The JNP-FPC-16C Flexible PIC Concentrator | **53**

The JNP-FPC-4CD Flexible PIC Concentrator | 58

The ACX7509 router supports three types of Flexible PIC Concentrators (FPCs) that are installed vertically in the front of the chassis: **JNP-FPC-20Y**, **JNP-FPC-16C**, and **JNP-FPC-4CD**. The ACX7509 chassis has nine FPC slots, but the chassis supports only eight FPCs in slots **FPC 0** through **7**. Slot **8** is empty.

FPCs are hot-removable and hot-insertable field-replaceable units (FRUs)—you can remove and replace them without powering off the router or disrupting router functions.

Table 17 on page 47 shows the Ethernet port rates supported with different optics types on the FPCs.

Table 17: Ethernet Port Rates on the FPCs

Port Speed	Optics	Chassis Slots Supported	Number of Slots	Ethernet Ports on the FPCs	Total Number of Ports
1GE	SFP	0/2/3/4/6/7	6	20	120
10GE	SFP+	0 -7	8	20	160
	QSFP+	0 -7	8	32 = (8x (4x 10GE BO))	256
25GE	SFP28	0 -7	8	20	160
	QSFP28	0 -7	8	32 = (8x (4x 25GE BO))	256
40GE	QSFP+	0 -7	8	16	128
50GE	SFP56	1 & 5	2	20	40
		0/2/3/4/6/7	6	10	60
		Total	8	Total	100

Table 17: Ethernet Port Rates on the FPCs *(Continued)*

Port Speed	Optics	Chassis Slots Supported	Number of Slots	Ethernet Ports on the FPCs	Total Number of Ports
	QSFP56-DD	1 & 5	2	32 = (4x (8x 50GE BO))	64
100GE	QSFP28	1 & 5	2	16	32
		0/2/3/4/6/7*	6	8*	48
		Total	8	Total	80
	QSFP56-DD	1 & 5	2	16 =(4x (4x 100GE BO))	32
200GE	QSFP56	1 & 5	2	4	8
400GE	QSFP56-DD	1 & 5	2	4	8

NOTE: When JNP-FPC-16C (16x100G) FPC is plugged into FPC slot 7, port 13 will not be supported as it is used for PTP Functionality.

The JNP-FPC-20Y Flexible PIC Concentrator

Figure 19: JNP-FPC-20Y

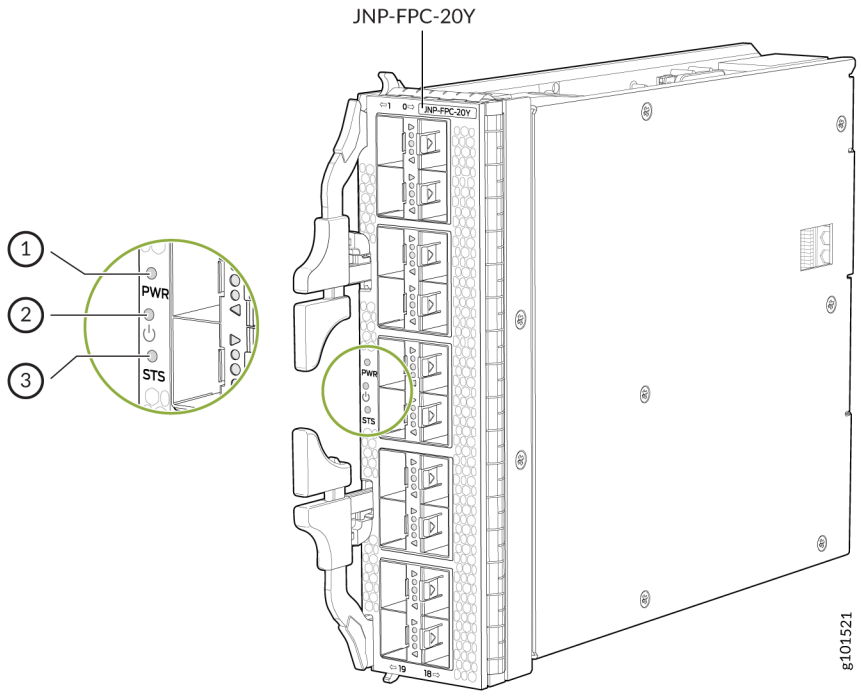

1– **PWR** status LED	3– **STS** FPC status LED
2– Online/Offline button	

Table 18: JNP-FPC-20Y Specifications

Software release	Junos OS Evolved 21.4R1
Description	• Height x Width x Depth: 1.74 in. (4.43 cm) x 6.6 in. (17 cm) x 7.87 in. (20 cm) • Model number: JNP-FPC-20Y • Name in the CLI: `JNP-FPC-20Y` • Number of ports: 20 (1 Gigabit Ethernet (GbE), 10 GbE, 25 GbE, or 50 GbE) • Optic Connectors: SFP (small form-factor pluggable), SFP+, SFP28, or SFP56

ACX7509 chassis slots supported	Slot numbers FPC 0 - 7
Hardware features	• Line rate of up to 1.6 Tbps through-put per FPC when installed in slot 1 or 5 of the chassis and 800 Gbps of throughput when installed in other slots. • Uses three PHY devices to send and receive packets to SFP56 modules from a switching ASIC (on the FEB card). • The PHY supports Precision Time Protocol (PTP) timing and supports Media Access Control Security (MACsec) and non-MACsec modes at all different speeds.
Software features	Inline MACsec on all ports. The MACsec feature is supported on Layer 1 and can be configured based on software configuration or license.
Power requirements	• Typical power requirement - 70W (without optics) • Worst case power requirement - 74W (with optics)

LEDs

Network LEDs

Each network port has a single tricolored LED that indicates link activity and status.

Color	State	Description
Unlit	Off	A transceiver is not present in the port, or the link is down because of signal loss.
Green	On steadily	A link is established.
Amber	On steadily	The link is down because of a remote error or because the port was disabled through the CLI.
Red	On steadily	The port has a hardware failure or link down.

FPC Status LEDs

Power **PWR** bi-color red/green LED:

Color	State	Description
Unlit	Off	No power.
Green	On steadily	The FPC has power and is operating correctly.
Red	On steadily	The FPC has a fault condition.

Status **STS** bi-color red/green LED:

Color	State	Description
Unlit	Off	The FPC is disabled or offline.
Green	On steadily	The FPC has power and is operating correctly.
Green	Blinking	The FPC is booting or going offline.
Yellow	On steadily	The FPC has a fault condition.

Online/Offline button	You can use this button to power off/on the FPC.
Cables and connectors	You can use the Hardware Compatibility Tool to find information about the pluggable transceivers supported on your Juniper Networks device.

The JNP-FPC-16C Flexible PIC Concentrator

Figure 20: JNP-FPC-16C

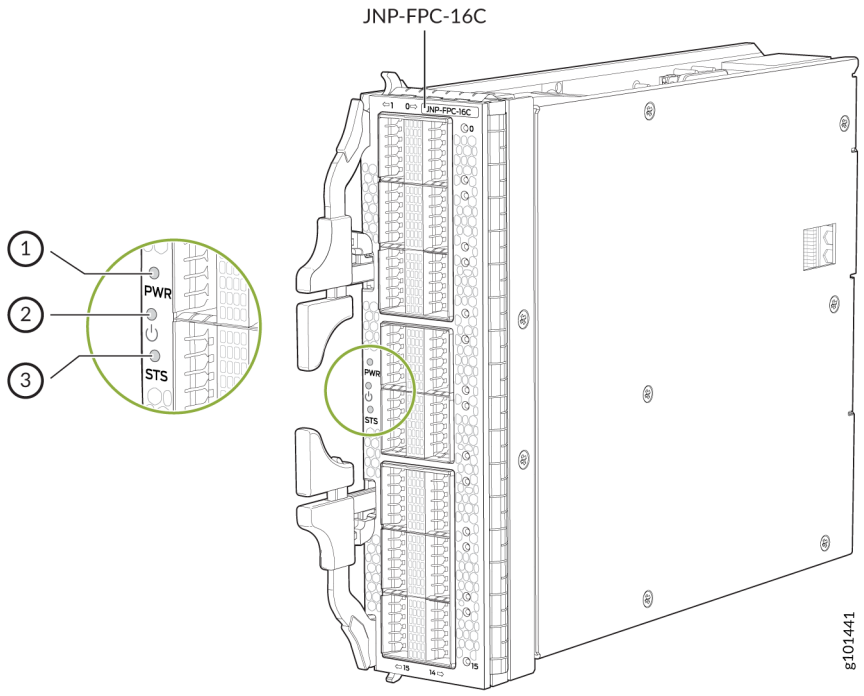

1– **PWR** status LED	3– **STS** FPC status LED
2– Online/Offline button	

Table 19: JNP-FPC-16C Specifications

Software release	Junos OS Evolved 21.4R1
Description	• Height x Width x Depth: 1.74 in. (4.43 cm) x 6.6 in. (17 cm) x 7.87 in. (20 cm) • Model number: JNP-FPC-16C • Name in the CLI: `JNP-FPC-16C` • Number of ports: 16 (40 GbE or 100 GbE) • Optic Connectors: Each port supports QSFP+ or QSFP28

ACX7509 chassis slots supported	Slot numbers FPC 0 - 7
Hardware features	• Line rate of up to 1.6 Tbps through-put per FPC when installed in slot 1 or 5 of the chassis and 800 Gbps of throughput when installed in other slots. • Uses four PHY devices to send and receive packets to QFSP28 modules from a switching ASIC (on the FEB card). • The PHY supports PTP timing and supports MACsec and non-MACsec modes at all different speeds.
Software features	Inline MACsec on all ports. The MACsec feature is supported on Layer 1 and can be configured based on software configuration.
Power requirements	• Typical power requirement - 122W (without optics) • Worst case power requirement - 133W (with optics)

Port speed	Cable options	Optics type
100G	1X100G	QSFP28
40G	1X40G	QSFP
25G	4X25G breakout	QSFP28
10G	4X10G breakout cable	QSFP

LEDs

Network LEDs

Each network port has a single tricolored LED that indicates link activity and status. The red, amber, or green LED has different interpretations depending on whether the port is channelized and whether the beacon feature is activated on the port. If the beacon feature is activated, the port blinks.

Nonchannelized:

Color	State	Description
Unlit	Off	A transceiver is not present in the port, or the link is down because of signal loss.
Green	On steadily	A link is established.
Amber	On steadily	The link is down because of a remote error or because the port was disabled through the CLI.
Red	On steadily	The link is down because the port has a hardware failure.

Channelized:

Color	State	Description
Unlit	Off	All channels are down because of signal loss.
Green	On steadily	A link is established and all channels are up.
Amber	On steadily	Applies to all other cases.

Color	State	Description
Red	On steadily	The link is down because of a hardware failure or a local error.

FPC Status LEDs

Power **PWR** bi-color red/green LED:

Color	State	Description
Unlit	Off	No power.
Green	On steadily	The FPC has power and is operating correctly.
Red	On steadily	The FPC has a fault condition.

Status **STS** bi-color yellow/green LED:

Color	State	Description
Unlit	Off	The FPC is disabled or offline.
Green	On steadily	The FPC has power and is operating correctly.
Green	Blinking	The FPC is booting or going offline.
Yellow	On steadily	The FPC has a fault condition or alarm.

Online/Offline button	You can use this button to power off/on the FPC.
Cables and connectors	You can use the Hardware Compatibility Tool to find information about the pluggable transceivers supported on your Juniper Networks device.

The JNP-FPC-4CD Flexible PIC Concentrator

Figure 21: JNP-FPC-4CD

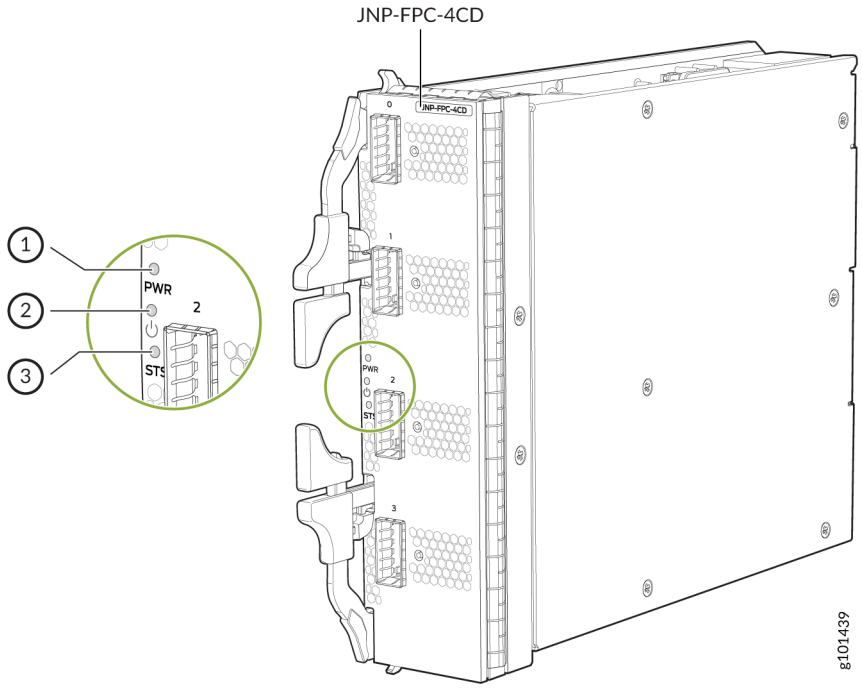

1– **PWR** status LED	3– **STS** FPC status LED
2– Online/Offline button	

Table 20: JNP-FPC-4CD Specifications

Software release	Junos OS Evolved 21.4R1
Description	• Height x Width x Depth: 1.74 in. (4.43 cm) x 6.6 in. (17 cm) x 7.87 in. (20 cm) • Model number: JNP-FPC-4CD • Name in the CLI: `JNP-FPC-4CD` • Number of ports: 4 (200 GbE or 400 GbE) • Optic Connectors: Each port supports QSFP56 or QSFP56-DD

ACX7509 chassis slots supported	Slot numbers 1 and 5
Hardware features	• Line rate of up to 1.6 Tbps throughput per FPC. • Uses four PHY devices to send and receive packets to QFSP56 modules from a switching ASIC (on the FEB card). • The PHY supports PTP timing and supports MACsec and non-MACsec modes at all different speeds.

Port speed	Cable options	Optics type
400G	4X100G	QSFP56-DD
200G	1X200G	QSFP56
	2X100G breakout cable	QSFP56-DD

Software features	Inline MACsec on all ports. The MACsec feature is supported on Layer 1 and can be configured based on software configuration.
Power requirements	• Typical power requirement - 102W (without optics) • Worst case power requirement - 114W (with optics)

LEDs

Network LEDs

Each network port has a single tricolored LED that indicates link activity and status. The red, amber, or green LED has different interpretations depending on whether the port is channelized and whether the beacon feature is activated on the port. If the beacon feature is activated, the port blinks.

Nonchannelized:

Color	State	Description
Unlit	Off	A transceiver is not present in the port, or the link is down because of signal loss.
Green	On steadily	A link is established.
Amber	On steadily	The link is down because of a remote error or because the port was disabled through the CLI.
Red	On steadily	The link is down because the port has a hardware failure.

Channelized:

Color	State	Description
Unlit	Off	All channels are down because of signal loss.
Green	On steadily	A link is established and all channels are up.
Amber	On steadily	Applies to all other cases.

Color	State	Description
Red	On steadily	The link is down because of a hardware failure or a local error.

FPC Status LEDs

Power **PWR** bi-color red/green LED:

Color	State	Description
Unlit	Off	No power.
Green	On steadily	The FPC has power and is operating correctly.
Red	On steadily	The FPC has a fault condition.

Status **STS** bi-color red/green LED:

Color	State	Description
Unlit	Off	The FPC is disabled or offline.
Green	On steadily	The FPC has power and is operating correctly.
Green	Blinking	The FPC is booting or going offline.

Online/Offline button	You can use this button to power off/on the FPC.
Cables and connectors	You can use the Hardware Compatibility Tool to find information about the pluggable transceivers supported on your Juniper Networks device.

2

CHAPTER

Site Planning, Preparation, and Specifications

Site Preparation Checklist for ACX7509 Routers | 64

ACX7509 Site Guidelines and Requirements | 65

ACX7509 Power Planning | 71

ACX7509 Rack and Cabinet Requirements | 77

ACX7509 Transceiver Support and Network Cable Planning | 81

ACX7509 Management Cable Specifications and Pinouts | 93

Site Preparation Checklist for ACX7509 Routers

The following checklist summarizes the tasks you need to perform when preparing a site for an ACX7509 router installation. It provides blank spaces for entering the name of the person who performs each task and the date the task is completed.

Table 21: Site Preparation Checklist for ACX7509 Routers

Item or Task	For More Information	Performed By	Date
Environment			
Verify that environmental factors such as temperature and humidity do not exceed router tolerances.	"Environmental Requirements and Specifications for ACX7509 Routers" on page 66		
Power			
Measure the distance between external power sources and the router installation site.			
Calculate the power consumption and requirements.	"ACX7509 Power System" on page 23		
Rack or Cabinet			
Verify that your rack or cabinet meets the minimum requirements for router installation.	"ACX7509 Rack and Cabinet Requirements" on page 77		
Plan rack or cabinet location, including required space clearances.	"Clearance Requirements for Airflow and Hardware Maintenance of ACX7509 Routers" on page 70		
Secure the rack or cabinet to the floor and building structure.			

Table 21: Site Preparation Checklist for ACX7509 Routers *(Continued)*

Item or Task	For More Information	Performed By	Date
Cables			
Acquire cables and connectors: • Determine the number of cables needed for your planned configuration. • Review the maximum distance allowed for each cable. Choose the length of cable based on the distance between the hardware components being connected.			
Plan cable routing and management.			

ACX7509 Site Guidelines and Requirements

SUMMARY

The proper function of the ACX7509 router depends on your meeting certain environmental requirements, following site and wiring guidelines, and ensuring that your installation meets the grounding specifications and airflow clearance requirements that support ACX7509 routers.

IN THIS SECTION

- Environmental Requirements and Specifications for ACX7509 Routers | **66**
- General Site Guidelines | **67**
- Site Electrical Wiring Guidelines | **67**
- ACX7509 Grounding Cable and Lug Specifications | **68**
- Clearance Requirements for Airflow and Hardware Maintenance of ACX7509 Routers | **70**

Environmental Requirements and Specifications for ACX7509 Routers

You must install the router in a rack or cabinet in a dry, clean, well-ventilated, and temperature-controlled environment.

Follow these environmental guidelines:

- The site must be as dust-free as possible because dust can clog air intake vents and filters, reducing the efficiency of the router cooling system.
- Maintain ambient airflow for normal router operation. If the airflow is blocked or restricted, or if the intake air is too warm, the router might overheat, and the router temperature monitor might shut down the device to protect the hardware components.

Table 22 on page 66 lists the environmental conditions required for normal router operation.

Table 22: ACX7509 Router Environmental Tolerances

Description	Tolerance
Altitude	6000 ft (1828 m)
Relative operating humidity	5% to 90% (noncondensing)
Relative nonoperating humidity	5% to 95% (noncondensing)
Nominal operating temperature	0° C to 40° C (32° F to 104° F)
Shipping and storage temperature	-40° C to 70° C (-40° F to 158° F)
Pollution degree	2 (IEC 60950)
Seismic tolerance	Complies with Zone 4 earthquake requirements according to NEBS GR-63-CORE, Issue 4.

NOTE: Install ACX Series devices only in restricted areas, such as dedicated equipment rooms and equipment closets, in accordance with Articles 110-16, 110-17, and 110-18 of the National Electrical Code, ANSI/NFPA 70.

General Site Guidelines

Efficient device operation requires proper site planning and maintenance. It also requires proper layout of the equipment, rack or cabinet, and wiring closet.

To plan and create an acceptable operating environment for your device and prevent environmentally caused equipment failures:

- Keep the area around the chassis free from dust and conductive material, such as metal flakes.
- Follow prescribed airflow guidelines to ensure that the cooling system functions properly. Ensure that exhaust from other equipment does not blow into the intake vents of the device.
- Follow the prescribed electrostatic discharge (ESD) prevention procedures to prevent damaging the equipment. Static discharge can cause components to fail completely or intermittently over time.
- Install the device in a secure area, so that only authorized personnel can access the device.

Site Electrical Wiring Guidelines

Table 23 on page 68 describes the factors you must consider while planning the electrical wiring at your site.

WARNING: You must provide a properly grounded and shielded environment and use electrical surge-suppression devices.

Avertissement Vous devez établir un environnement protégé et convenablement mis à la terre et utiliser des dispositifs de parasurtension.

Table 23: Site Electrical Wiring Guidelines

Site Wiring Factor	Guidelines
Signaling limitations	If your site experiences any of the following problems, consult experts in electrical surge suppression and shielding: • Improperly installed wires cause radio frequency interference (RFI). • Damage from lightning strikes occurs when wires exceed recommended distances or pass between buildings. • Electromagnetic pulses (EMPs) caused by lightning damage unshielded conductors and electronic devices.
Radio frequency interference	To reduce or eliminate RFI from your site wiring, do the following: • Use a twisted-pair cable with a good distribution of grounding conductors. • If you must exceed the recommended distances, use a high-quality twisted-pair cable with one ground conductor for each data signal, when applicable.
Electromagnetic compatibility	If your site is susceptible to problems with electromagnetic compatibility (EMC), particularly from lightning or radio transmitters, seek expert advice. Strong sources of electromagnetic interference (EMI) can cause: • Destruction of the signal drivers and receivers in the device, • Electrical hazards as a result of power surges conducted over the lines into the equipment.

ACX7509 Grounding Cable and Lug Specifications

For installations that require a separate grounding conductor to the chassis, you must ground the router before you connect power. Grounding the router ensures proper operation and meets safety and electromagnetic interference (EMI) requirements. To ground an ACX7509 router, connect a grounding cable to earth ground, and then attach the grounding cable to the chassis grounding point.

WARNING: The router is pluggable type *A* equipment installed in a restricted-access location. It has a separate protective earthing terminal on the chassis in addition to the grounding pin of the power supply cord. This separate protective earthing terminal must be permanently connected to earth ground for installations that require a separate grounding conductor to the chassis.

WARNING: To comply with GR-1089 requirements, all intra-building copper cabling used for transceiver ports must be shielded and grounded at both ends.

CAUTION: Before router installation begins, have a licensed electrician attach a cable lug to the grounding cables that you supply. A cable with an incorrectly attached lug can damage the router.

NOTE: You must ensure that all cables are rated for the environment in which they are deployed.

For an ACX7509 router, you need a grounding cable and straight lug with dual holes. You also need a dual-hole straight lug connector. The grounding lug accommodates 4 AWG (10 mm^2), minimum 90° C wire, or as required by the local code.

Clearance Requirements for Airflow and Hardware Maintenance of ACX7509 Routers

When planning the site for installing an ACX7509 router, you must allow sufficient clearance around the installed chassis. See Figure 22 on page 70.

Figure 22: Clearance Requirements for Hardware Maintenance of ACX7509 Routers

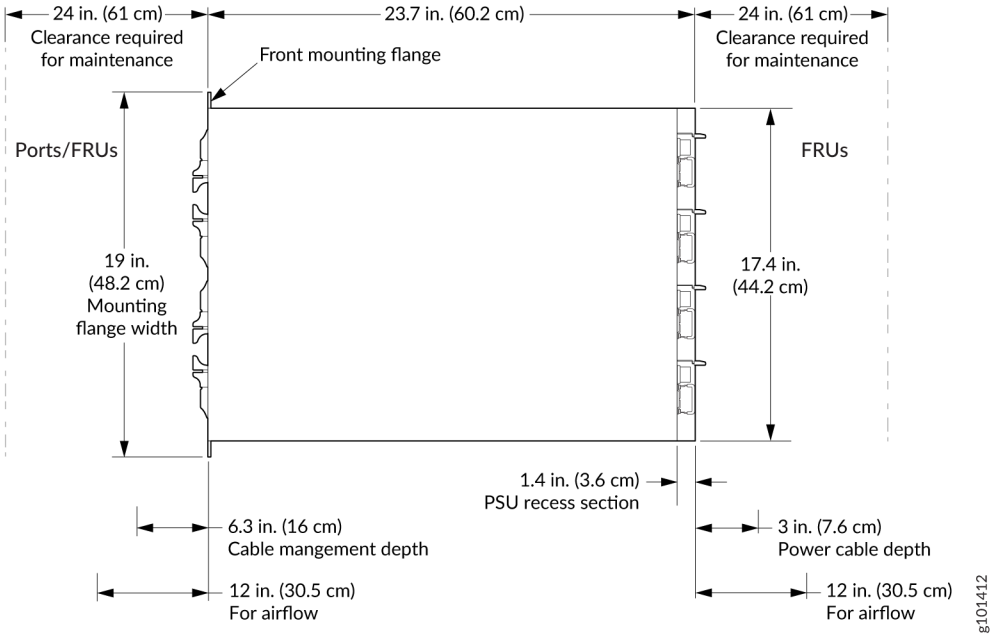

Ensure that your installation of the ACX7509 router chassis meets the following requirements:

- For the cooling system to function properly, the airflow around the chassis must be unrestricted. See "Cooling System and Airflow in ACX7509 Routers" on page 19 for more information about the airflow through the chassis.
- If you are mounting an ACX7509 router in a rack or cabinet with other equipment, ensure that the exhaust from other equipment does not blow into the intake vents of the chassis.
- For service personnel to remove and install hardware components, and to accommodate the interface and power cable bend radius, allow at least 24 in. (61 cm) of space both at the front and the rear of the router. NEBS GR-63 recommends that you allow at least 30 in. (76.2 cm) behind (at the rear of) the router.

- The chassis and cables must not interfere with the cooling of other systems in the rack. Use fillers in the rack as needed to ensure that heated exhaust air is not recirculated to the front of the rack. Ensure that cables don't block airflow or cause recirculation of heated air toward the router chassis.

ACX7509 Power Planning

SUMMARY

Power planning includes calculating power requirements and thermal output.

IN THIS SECTION

- Calculating Power Requirements for the ACX7509 Router | **71**

Calculating Power Requirements for the ACX7509 Router

IN THIS SECTION

- Power Requirements for ACX7509 Components | **71**
- Power Specifications of AC or DC PSMs | **72**
- Power Requirement Calculation for an ACX7509-BASE Router | **73**
- Power Requirement Calculation for an ACX7509-PREMIUM Router | **75**
- System Thermal Output Calculation | **77**

Use the information in this topic to determine the power requirement for your router and plan the amount of power you need to provide to the router.

Power Requirements for ACX7509 Components

Table 24 on page 72 lists the power requirements of the Field Replaceable Units (FRUs) of the ACX7509 router.

Table 24: Power Requirements of the ACX7509 Router Field Replaceable Units

Component	Typical Power Requirement (Without Optics)	Worst Case Power Requirements (With Optics)
JNP5700-FAN	80 W	336 W
ACX7509-RCB	60 W	70 W
ACX7509-FEB	356 W	468 W
ACX-FPC-16C	122 W	133 W
ACX-FPC-4CD	102 W	114 W
ACX-FPC-20Y	70 W	74 W

Power Specifications of AC or DC PSMs

Table 25 on page 72 shows how much power is available with AC and DC power supplies. The ACX7509 DC power supply module (PSM) can operate with an input current of 80 A or 60 A. You select the input rating by moving the DC input current selector (DIP switch) to the desired setting.

Table 25: Power Specifications of AC or DC PSMs

Number of Power Supplies	AC	DC		
		60 A (DIP switch)		80 A (DIP switch)
		Input voltage 40V - 48V	Input voltage 48V - 72V	40 VDC - 72 VDC
1	3000 W	2200 W	2700 W	3000 W
2	6000 W	4400 W	5400 W	6000 W
3	9000 W	6600 W	8100 W	9000 W

Table 25: Power Specifications of AC or DC PSMs *(Continued)*

Number of Power Supplies	AC	DC		
		60 A (DIP switch)		80 A (DIP switch)
		Input voltage 40V - 48V	Input voltage 48V - 72V	40 VDC - 72 VDC
4	12000 W	8800 W	10800 W	12000 W

Power Requirement Calculation for an ACX7509-BASE Router

The following sample configuration shows the power requirement of a fully loaded ACX7509-BASE router.

- One Routing and Control Board (RCB)
- One Forwarding Engine Board (FEB)
- Eight Flexible PIC Concentrator (FPCs), as follows:
  - Six ACX-FPC-20Y
  - One ACX-FPC-16C
  - One ACX-FPC-4CD
- Two JNP5700-FAN fan trays
- Two JNP-3000W-AC-AFO or JNP-3000W-DC-AFO power supplies

The preceding sample configuration uses generalized values.

Table 26: Power Requirements of a Fully Loaded ACX7509-BASE Router

Component	Chassis Slot Number	Typical Power Requirement (Without Optics)	Worst Case Power Requirements (With Optics)
ACX7509-RCB	RCB 0	60 W	70 W
ACX7509-FEB	FEB 0	356 W	468 W

Table 26: Power Requirements of a Fully Loaded ACX7509-BASE Router *(Continued)*

Component	Chassis Slot Number	Typical Power Requirement (Without Optics)	Worst Case Power Requirements (With Optics)
ACX-FPC-20Y	FPC 0, 2, 3, 4, 6, and 7	70 W * 6 = 420 W	74 W * 6 = 444 W
ACX-FPC-16C	1	122 W	133 W
ACX-FPC-4CD	5	102 W	114 W
JNP5700-FAN	Fan Tray 0 and Fan Tray 1	80 W * 2 = 160 W	336 W * 2 = 672 W
PSM power loss with 92% efficiency		160.16 W	187.68 W
Total power requirement		1380.16 W	2088.68 W
Total power requirement (in Watts) with 92% efficiency		Power requirement in watts / power supply efficiency @92% = power consumption in watts: 1380.16 / 0.92 = 1500	Power requirement in watts / power supply efficiency @92% = power consumption in watts: 2088.68 / 0.92 = 2270

Table 27 on page 74 lists the power requirements for the fully configured ACX7509-BASE router with AC or DC PSMs.

Table 27: ACX7509-BASE Router Power Requirements with AC or DC PSMs

ACX7509-BASE Configuration	Typical Power Requirement (Without Optics)	Worst Case Power Requirements (With Optics)
Fully configured ACX7509-BASE chassis running at high activity, with SFP28, QSFP28, QSFP56-DD optics, and AC PSMs	1500 W	2270 W

Table 27: ACX7509-BASE Router Power Requirements with AC or DC PSMs *(Continued)*

ACX7509-BASE Configuration	Typical Power Requirement (Without Optics)	Worst Case Power Requirements (With Optics)
Fully configured ACX7509-BASE chassis running at high activity, with SFP28, QSFP28, QSFP56-DD optics, and DC PSMs	1500 W	2270 W

Power Requirement Calculation for an ACX7509-PREMIUM Router

The following sample configuration shows the power requirement of a fully loaded ACX7509-PREMIUM router.

- Two Routing and Control Boards (RCBs)
- Two Forwarding Engine Boards (FEBs)
- Eight Flexible PIC Concentrator (FPCs), as follows:
  - Six ACX-FPC-20Y
  - One ACX-FPC-16C
  - One ACX-FPC-4CD
- Two JNP5700-FAN fan trays
- Four JNP-3000W-AC-AFO or JNP-3000W-DC-AFO power supplies

The preceding sample configuration uses generalized values.

Table 28: Power Requirements of a Fully Loaded ACX7509-PREMIUM Router

Component	Chassis Slot Number	Typical Power Requirement (Without Optics)	Worst Case Power Requirements (With Optics)
ACX7509-RCB	RCB 0 and RCB 1	60*2 = 120 W	70*2 = 140 W
ACX7509-FEB	FEB 0 and FEB 1	356*2 = 712 W	468*2 = 936 W

Table 28: Power Requirements of a Fully Loaded ACX7509-PREMIUM Router *(Continued)*

Component	Chassis Slot Number	Typical Power Requirement (Without Optics)	Worst Case Power Requirements (With Optics)
ACX-FPC-20Y	FPC 0, 2, 3, 4, 6, and 7	70 W * 6 = 420 W	74 W * 6 = 444 W
ACX-FPC-16C	1	122 W	133 W
ACX-FPC-4CD	5	102 W	114 W
JNP5700-FAN	Fan Tray 0 and Fan Tray 1	80 W * 2 = 160 W	336 W * 2 = 672 W
PSU Power loss with 92% efficiency		215.68 W	243.2 W
Total power requirement		1851.68 W	2682.2 W
Total power requirement (in Watts) with 92% efficiency		Power requirement in watts / power supply efficiency @92% = power consumption in watts: 1851.68 / 0.92 = 2012 W	Power requirement in watts / power supply efficiency @92% = power consumption in watts: 2682.2 / 0.92 = 2915 W

Table 27 on page 74 lists the power requirements for the fully configured ACX7509-PREMIUM router with AC or DC PSUs.

Table 29: ACX7509-PREMIUM Router Power Requirements with AC or DC PSMs

ACX7509-PREMIUM Configuration	Typical Power Requirement	Power Requirement with Optics
Fully configured ACX7509-PREMIUM chassis running at high activity, with SFP28, QSFP28, QSFP56-DD optics, and AC PSMs	2012 W	2915 W

Table 29: ACX7509-PREMIUM Router Power Requirements with AC or DC PSMs *(Continued)*

ACX7509-PREMIUM Configuration	Typical Power Requirement	Power Requirement with Optics
Fully configured ACX7509-PREMIUM chassis running at high activity, with SFP28, QSFP28, QSFP56-DD optics, and DC PSMs	2012 W	2915 W

System Thermal Output Calculation

After you have calculated the power consumption for your configuration, you can use that information to determine the system thermal output in Basic Transmission Units (BTUs) per hour. To do so, multiply the power consumption in watts by 3.41.

For example, in "Power Requirement Calculation for an ACX7509-BASE Router" on page 73, we calculated the power consumption for a fully configured ACX7509-BASE chassis running at high activity, with SFP28, QSFP28, QSFP56-DD optics, and AC PSMs, to be 1500 W. Using that information we can calculate the system thermal output for the configuration as follows:

```
Power consumption in watts * 3.41 = system thermal output in BTU/hr
1500 W * 3.41 = 5115 BTU/hr
```

ACX7509 Rack and Cabinet Requirements

SUMMARY

You must install the ACX7509 router on a rack or in a cabinet that meets specific dimension, strength, and airflow requirements.

IN THIS SECTION

- Rack Requirements for ACX7509 Routers | **78**
- Cabinet Requirements for ACX7509 Routers | **79**

Rack Requirements for ACX7509 Routers

The ACX7509 routers are designed to be installed on four-post racks.

The size, strength, and location of the rack must accommodate the router's weight and external dimensions.

Table 30 on page 78 provides the rack requirements and guidelines for ACX7509 routers.

Table 30: Rack Requirements for ACX7509 Routers

Rack Requirement	Guidelines
Rack type	Use a four-post rack that provides bracket holes or hole patterns spaced at 1 U increments (1.75 in. or 4.45 cm), and ensure that the rack meets the size and strength requirements to support the weight of the router. A U is the standard rack unit defined in *Cabinets, Racks, Panels, and Associated Equipment* (document number EIA-310–D) published by the Electronics Industry Association.
Mounting bracket hole spacing	Ensure that the holes in the mounting brackets are spaced at 1 U (1.75 in. or 4.45 cm) so that the router can be mounted in any rack that provides holes spaced at that distance.

Table 30: Rack Requirements for ACX7509 Routers *(Continued)*

Rack Requirement	Guidelines
Rack size and strength	• Ensure that the rack complies with the standards for a 19-in. rack as defined in *Cabinets, Racks, Panels, and Associated Equipment* (document number EIA-310–D), published by the Electronics Industry Association. • Use an 800-mm rack as defined in the four-part *Equipment Engineering (EE) European telecommunications standard for equipment practice* (document numbers ETS 300 119-1 through 119-4), published by the European Telecommunications Standards Institute (http://www.etsi.org). The horizontal spacing between the rails in a rack that complies with this standard is usually wider than the device's mounting brackets, which measure 19 in. (48.26 cm) from outer edge to outer edge. Use approved wing devices to narrow the opening between the rails, as required. • Ensure that the rack rails are spaced widely enough to accommodate the external dimensions of the router chassis. The outer edges of the front-mounting brackets extend the width to 19 in. (48.26 cm). • Ensure that the rack is strong enough to support the weight of the router. A fully configured ACX7509 router weighs approximately 167.55 lb (76 kg). • Ensure that the spacing of rails and adjacent racks allows for proper clearance around the router and rack.
Rack connection to building structure	• Secure the rack to the building structure. • If earthquakes are a possibility in your geographical area, secure the rack to the floor. • Secure the rack to the ceiling brackets and to the wall or floor brackets for maximum stability.

Cabinet Requirements for ACX7509 Routers

You can mount an ACX7509 router in an enclosure or cabinet that contains a four-post 19-in. open rack as defined in *Cabinets, Racks, Panels, and Associated Equipment* (document number EIA-310-D), published by the Electronics Industry Association.

Table 31 on page 80 provides the cabinet requirements and guidelines for an ACX7509 router.

Table 31: Cabinet Requirements for ACX7509 Routers

Cabinet Requirement	Guidelines
Cabinet depth	The minimum cabinet depth for accommodating an ACX7509 router is 19.5 in. (49.5 cm). Large cabinets improve airflow and reduce the chance of overheating.
Cabinet clearance	The outer edges of the front mounting brackets extend the width of the chassis to 19 in. (48.2 cm). The minimum total clearance inside the cabinet is 30.7 in. (78 cm) between the inside of the front door and the inside of the rear door.
Cabinet airflow requirements	When you mount the router in a cabinet, ensure that ventilation through the cabinet is sufficient to prevent overheating. • Ensure that the cool air supply you provide through the cabinet adequately dissipates the thermal output of the router (or routers). • Ensure that the cabinet allows the chassis hot exhaust air to exit the cabinet without recirculating into the router. An open cabinet (without a top or doors) that employs hot air exhaust extraction from the top allows the best airflow through the chassis. If the cabinet contains a top or doors, perforations in these elements assist with removing the hot exhaust air. • In the ACX7509 router, air is pulled through the front of the chassis towards the fan tray, where it is exhausted out of the chassis. Install the router in the cabinet in a way that maximizes the open space on the rear side of the chassis. This position maximizes the clearance for critical airflow. • Route and secure all cables to minimize the blockage of airflow to and from the chassis. • Ensure that the spacing of rails and adjacent cabinets allows for proper clearance around the router and cabinet.

ACX7509 Transceiver Support and Network Cable Planning

SUMMARY

Your transceiver and network cable plan for the ACX7509 router must take into consideration the fiber-optic cables you can use, including connector details and pinouts. For optimal router function, your site must meet cable power requirements and mitigate cable signal loss, attenuation, and dispersion.

IN THIS SECTION

- Determining Transceiver Support for ACX7509 | **81**
- Cable and Connector Specifications for ACX7509 Routers | **82**
- Calculating Power Budget and Power Margin for Fiber-Optic Cables | **89**
- Fiber-Optic Cable Signal Loss, Attenuation, and Dispersion | **92**

Determining Transceiver Support for ACX7509

You can find information about the pluggable transceivers and connector types that your Juniper Networks router supports by using the Hardware Compatibility Tool. The tool also documents the optical and cable characteristics, where applicable, for each transceiver. You can search for transceivers by product—the tool displays all the transceivers supported on that device—or by category, interface speed, or type.

CAUTION: The Juniper Networks Technical Assistance Center (JTAC) provides complete support for Juniper-supplied optical modules and cables. However, JTAC does not provide support for third-party optical modules and cables that are not qualified or supplied by Juniper Networks. If you face a problem running a Juniper device that uses third-party optical modules or cables, JTAC may help you diagnose host-related issues if the observed issue is not, in the opinion of JTAC, related to the use of the third-party optical modules or cables. Your JTAC engineer will likely request that you check the third-party optical module or cable and, if required, replace it with an equivalent Juniper-qualified component.

Use of third-party optical modules with high-power consumption (for example, coherent ZR or ZR+) can potentially cause thermal damage to or reduce the lifespan of

the host equipment. Any damage to the host equipment due to the use of third-party optical modules or cables is the users' responsibility. Juniper Networks will accept no liability for any damage caused due to such use.

Cable and Connector Specifications for ACX7509 Routers

IN THIS SECTION

- 12-Fiber MPO Connectors | 82
- 24-Fiber MPO Connectors | 87
- CS Connector | 88
- LC Duplex Connectors | 89

The transceivers that the ACX7509 router supports use fiber-optic cables and connectors. The type of connector and the type of fiber depends on the transceiver type.

You can determine the type of cable and connector that your specific transceiver requires by using the Hardware Compatibility Tool.

CAUTION: To maintain agency approvals, use only a properly constructed, shielded cable.

NOTE: The terms multifiber push-on (MPO) and multifiber termination push-on (MTP) describe the same connector type. The rest of this topic uses MPO to mean either MPO or MTP.

12-Fiber MPO Connectors

Two types of cables are used with 12-fiber MPO connectors on Juniper Networks devices—patch cables with MPO connectors on both ends, and breakout cables with an MPO connector on one end and four LC duplex connectors on the opposite end. Depending on the application, the cables might use single-mode fiber (SMF) or multimode fiber (MMF). Juniper Networks sells cables that meet the supported transceiver requirements, but it is not required to purchase cables from Juniper Networks.

Ensure that you order cables with the correct polarity. Vendors refer to these crossover cables as *key up to key up*, *latch up to latch up*, *Type B*, or *Method B*. If you are using patch panels between two transceivers, ensure that the proper polarity is maintained through the cable plant.

Also, ensure that the fiber end in the connector is finished correctly. Physical contact (PC) refers to fiber that has been polished flat. Angled physical contact (APC) refers to fiber that has been polished at an angle. Ultra physical contact (UPC) refers to fiber that has been polished flat, to a finer finish. The required fiber end is listed with the connector type in the Hardware Compatibility Tool.

12-Fiber Ribbon Patch Cables with MPO Connectors

You can use 12-fiber ribbon patch cables with socket MPO connectors to connect two transceivers of the same type—for example, 40GBASE-SR4-to-40GBASE-SR4 or 100GBASE-SR4-to-100GBASE-SR4. You can also connect 4x10GBASE-LR or 4x10GBASE-SR transceivers by using patch cables—for example, 4x10GBASE-LR-to-4x10GBASE-LR or 4x10GBASE-SR-to-4x10GBASE-SR—instead of breaking the signal out into four separate signals.

Table 32 on page 83 describes the signals on each fiber. Table 33 on page 84 shows the pin-to-pin connections for proper polarity.

Table 32: Cable Signals for 12-Fiber Ribbon Patch Cables

Fiber	Signal
1	Tx0 (Transmit)
2	Tx1 (Transmit)
3	Tx2 (Transmit)
4	Tx3 (Transmit)
5	Unused
6	Unused
7	Unused
8	Unused

Table 32: Cable Signals for 12-Fiber Ribbon Patch Cables *(Continued)*

Fiber	Signal
9	Rx3 (Receive)
10	Rx2 (Receive)
11	Rx1 (Receive)
12	Rx0 (Receive)

Table 33: Cable Pinouts for 12-Fiber Ribbon Patch Cables

MPO Pin	MPO Pin
1	12
2	11
3	10
4	9
5	8
6	7
7	6
8	5
9	4

Table 33: Cable Pinouts for 12-Fiber Ribbon Patch Cables *(Continued)*

MPO Pin	MPO Pin
10	3
11	2
12	1

12-Fiber Ribbon Breakout Cables with MPO-to-LC Duplex Connectors

You can use 12-ribbon breakout cables with MPO-to-LC duplex connectors to connect a QSFP+ transceiver to four separate SFP+ transceivers—for example, 4x10GBASE-LR-to-10GBASE-LR or 4x10GBASE-SR-to-10GBASE-SR SFP+ transceivers. The breakout cable is constructed out of a 12-fiber fiber-optic ribbon cable. The ribbon cable splits from a single cable with a socket MPO connector on one end into four cable pairs with four LC duplex connectors on the opposite end.

Table 34 on page 85 describes the way the fibers are connected between the MPO and LC duplex connectors. The cable signals are the same as those described in Table 32 on page 83.

Table 34: Cable Pinouts for 12-Fiber Ribbon Breakout Cables

MPO Connector Pin	LC Duplex Connector Pin
1	Tx on LC Duplex 1
2	Tx on LC Duplex 2
3	Tx on LC Duplex 3
4	Tx on LC Duplex 4
5	Unused
6	Unused

Table 34: Cable Pinouts for 12-Fiber Ribbon Breakout Cables *(Continued)*

MPO Connector Pin	LC Duplex Connector Pin
7	Unused
8	Unused
9	Rx on LC Duplex 4
10	Rx on LC Duplex 3
11	Rx on LC Duplex 2
12	Rx on LC Duplex 1

12-Ribbon Patch and Breakout Cables Available from Juniper Networks

Juniper Networks sells 12-ribbon patch and breakout cables with MPO connectors that meet the requirements described above. It is not required to purchase cables from Juniper Networks. Table 35 on page 86 describes the available cables.

Table 35: 12-Ribbon Patch and Breakout Cables Available from Juniper Networks

Cable Type	Connector Type	Fiber Type	Cable Length	Juniper Model Number
12-ribbon patch	Socket MPO/PC to socket MPO/PC, key up to key up	MMF (OM3)	1 m	MTP12-FF-M1M
			3 m	MTP12-FF-M3M
			5 m	MTP12-FF-M5M
			10 m	MTP12-FF-M10M

Table 35: 12-Ribbon Patch and Breakout Cables Available from Juniper Networks *(Continued)*

Cable Type	Connector Type	Fiber Type	Cable Length	Juniper Model Number
	Socket MPO/APC to socket MPO/APC, key up to key up	SMF	1 m	MTP12-FF-S1M
			3 m	MTP12-FF-S3M
			5 m	MTP12-FF-S5M
			10 m	MTP12-FF-S10M
12-ribbon breakout	Socket MPO/PC, key up, to four LC/UPC duplex	MMF (OM3)	1 m	MTP-4LC-M1M
			3 m	MTP-4LC-M3M
			5 m	MTP-4LC-M5M
			10 m	MTP-4LC-M10M
	Socket MPO/APC, key up, to four LC/UPC duplex	SMF	1 m	MTP-4LC-S1M
			3 m	MTP-4LC-S3M
			5 m	MTP-4LC-S5M
			10 m	MTP-4LC-S10M

24-Fiber MPO Connectors

You can use patch cables with 24-fiber MPO connectors to connect two supported transceivers of the same type—for example, 100GBASE-SR10-to-100GBASE-SR10.

Figure 23 on page 88 shows the 24-fiber MPO optical lane assignments.

Figure 23: 24-Fiber MPO Optical Lane Assignments

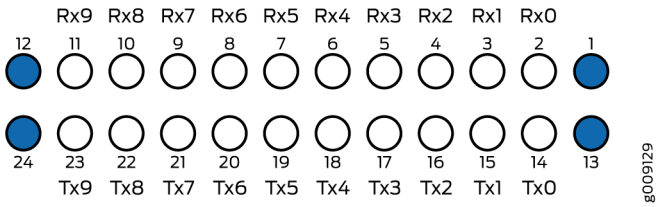

NOTE: Ensure that you order cables with the correct polarity. Vendors refer to these crossover cables as *key up to key up*, *latch up to latch up*, *Type B*, or *Method B*. If you are using patch panels between two transceivers, ensure that the proper polarity is maintained through the cable plant.

The MPO optical connector for the CFP2-100G-SR10-D3 is defined in Section 5.6 of the CFP2 Hardware Specification and Section 88.10.3 of IEEE STD 802.3-2012. These specifications include the following requirements:

- Recommended Option A in IEEE STD 802.3-2012 is required.
- The transceiver receptacle is a plug. A patch cable with a socket connector is required to mate with the module.
- Ferrule finish shall be a flat polished interface that is compliant with IEC 61754-7.
- Alignment key is key up.

The optical interface must meet the requirement FT-1435-CORE in *Generic Requirements for Multi-Fiber Optical Connectors*. The module must pass the wiggle test defined by IEC 62150-3.

CS Connector

You can use patch cables with CS connectors to connect two supported transceivers of the same type—for example, 2x100G-LR4 to 2x100G-LR4 or 2x100G-CWDM4 to 2x100G-CWDM4. A CS connector is compact, designed for next-generation QSFP-DD transceivers. This type of connector provides easy backward compatibility with QSFP28 and QSFP56 transceivers.

LC Duplex Connectors

You can use patch cables with LC duplex connectors to connect two supported transceivers of the same type—for example, 40GBASE-LR4-to-40GBASE-LR4 or 100GBASE-LR4-to100GBASE-LR4. The patch cable is one fiber pair with two LC duplex connectors at opposite ends. LC duplex connectors are also used with 12-fiber ribbon breakout cables.

Figure 24 on page 89 shows an LC duplex connector being installed in a transceiver.

Figure 24: LC Duplex Connector

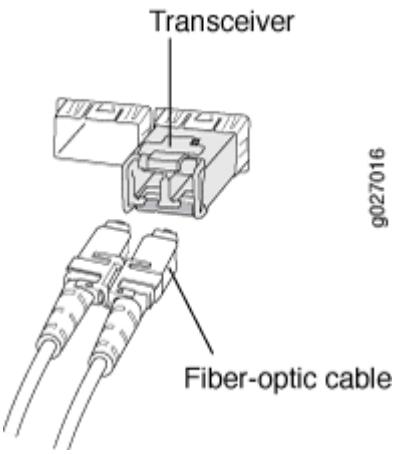

Calculating Power Budget and Power Margin for Fiber-Optic Cables

IN THIS SECTION

- How to Calculate Power Budget for Fiber-Optic Cables | **90**
- How to Calculate Power Margin for Fiber-Optic Cables | **90**

Use the information in this topic and the specifications for your optical interface to calculate the power budget and power margin for fiber-optic cables.

TIP: You can use the Hardware Compatibility Tool to find information about the pluggable transceivers supported on your Juniper Networks device.

To calculate the power budget and power margin, perform the following tasks:

How to Calculate Power Budget for Fiber-Optic Cables

To ensure that fiber-optic connections have sufficient power for correct operation, you need to calculate the link's power budget, which is the maximum amount of power it can transmit. When you calculate the power budget, you use a worst-case analysis to provide a margin of error, even though all the parts of an actual system do not operate at the worst-case levels. To calculate the worst-case estimate of power budget (P_B), you assume minimum transmitter power (P_T) and minimum receiver sensitivity (P_R):

$P_B = P_T - P_R$

The following hypothetical power budget equation uses values measured in decibels (dB) and decibels referred to one milliwatt (dBm):

$P_B = P_T - P_R$

$P_B = -15\ dBm - (-28\ dBm)$

$P_B = 13\ dB$

How to Calculate Power Margin for Fiber-Optic Cables

After calculating a link's power budget, you can calculate the power margin (P_M), which represents the amount of power available after subtracting attenuation or link loss (LL) from the power budget (P_B). A worst-case estimate of P_M assumes maximum LL:

$P_M = P_B - LL$

P_M greater than zero indicates that the power budget is sufficient to operate the receiver.

Factors that can cause link loss include higher-order mode losses, modal and chromatic dispersion, connectors, splices, and fiber attenuation. Table 36 on page 91 lists an estimated amount of loss for the factors used in the following sample calculations. For information about the actual amount of signal loss caused by equipment and other factors, refer to vendor documentation.

Table 36: Estimated Values for Factors Causing Link Loss

Link-Loss Factor	Estimated Link-Loss Value
Higher-order mode losses	Single mode—None Multimode—0.5 dB
Modal and chromatic dispersion	Single mode—None Multimode—None, if product of bandwidth and distance is less than 500 MHz-km
Faulty connector	0.5 dB
Splice	0.5 dB
Fiber attenuation	Single mode—0.5 dB/km Multimode—1 dB/km

The following sample calculation for a 2-km-long multimode link with a power budget (P_B) of 13 dB uses the estimated values from Table 36 on page 91. This example calculates link loss (LL) as the sum of fiber attenuation (2 km @ 1 dB/km, or 2 dB) and loss for five connectors (0.5 dB per connector, or 2.5 dB) and two splices (0.5 dB per splice, or 1 dB) as well as higher-order mode losses (0.5 dB). The power margin (P_M) is calculated as follows:

$P_M = P_B - LL$

$P_M = 13\ dB - 2\ km\ (1\ dB/km) - 5\ (0.5\ dB) - 2\ (0.5\ dB) - 0.5\ dB$

$P_M = 13\ dB - 2\ dB - 2.5\ dB - 1\ dB - 0.5\ dB$

$P_M = 7\ dB$

The following sample calculation for an 8-km-long single-mode link with a power budget (P_B) of 13 dB uses the estimated values from Table 36 on page 91. This example calculates link loss (LL) as the sum of fiber attenuation (8 km @ 0.5 dB/km, or 4 dB) and loss for seven connectors (0.5 dB per connector, or 3.5 dB). The power margin (P_M) is calculated as follows:

$P_M = P_B - LL$

$P_M = 13\ dB - 8\ km\ (0.5\ dB/km) - 7(0.5\ dB)$

P_M = 13 dB – 4 dB – 3.5 dB

P_M = 5.5 dB

In both examples, the calculated power margin is greater than zero, indicating that the link has sufficient power for transmission and does not exceed the maximum receiver input power.

Fiber-Optic Cable Signal Loss, Attenuation, and Dispersion

IN THIS SECTION

- Signal Loss in Multimode and Single-Mode Fiber-Optic Cable | **92**
- Attenuation and Dispersion in Fiber-Optic Cable | **92**

Signal Loss in Multimode and Single-Mode Fiber-Optic Cable

Multimode fiber is large enough in diameter to allow rays of light to reflect internally (bounce off the walls of the fiber). Interfaces with multimode optics typically use LEDs as light sources. However, LEDs are not coherent sources. They spray varying wavelengths of light into the multimode fiber, which reflects the light at different angles. Light rays travel in jagged lines through a multimode fiber, causing signal dispersion. When light traveling in the fiber core radiates into the fiber cladding, higher-order mode loss results. Together these factors limit the transmission distance of multimode fiber compared with single-mode fiber.

Single-mode fiber is so small in diameter that rays of light can reflect internally through one layer only. Interfaces with single-mode optics use lasers as light sources. Lasers generate a single wavelength of light, which travels in a straight line through the single-mode fiber. Compared with multimode fiber, single-mode fiber has higher bandwidth and can carry signals for longer distances.

Exceeding the maximum transmission distances can result in significant signal loss, which causes unreliable transmission.

Attenuation and Dispersion in Fiber-Optic Cable

Correct functioning of an optical data link depends on modulated light reaching the receiver with enough power to be demodulated correctly. *Attenuation* is the reduction in power of the light signal as it is transmitted. Attenuation is caused by passive media components such as cables, cable splices, and connectors. Although attenuation is significantly lower for optical fiber than for other media, it still

occurs in both multimode and single-mode transmission. An efficient optical data link must have enough light available to overcome attenuation.

Dispersion is the spreading of the signal over time. The following two types of dispersion can affect an optical data link:

- Chromatic dispersion—Spreading of the signal over time, resulting from the different speeds of light rays.
- Modal dispersion—Spreading of the signal over time, resulting from the different propagation modes in the fiber.

For multimode transmission, modal dispersion—rather than chromatic dispersion or attenuation—usually limits the maximum bit rate and link length. For single-mode transmission, modal dispersion is not a factor. However, at higher bit rates and over longer distances, chromatic dispersion rather than modal dispersion limits maximum link length.

An efficient optical data link must have enough light to exceed the minimum power that the receiver requires to operate within its specifications. In addition, the total dispersion must be less than the limits specified for the type of link in Telcordia Technologies document GR-253-CORE (Section 4.3) and International Telecommunications Union (ITU) document G.957.

When chromatic dispersion is at the maximum allowed, its effect can be considered as a power penalty in the power budget. The optical power budget must allow for the sum of component attenuation, power penalties (including those from dispersion), and a safety margin for unexpected losses.

ACX7509 Management Cable Specifications and Pinouts

SUMMARY

The ACX7509 router relies on connections through specific management cables, ports, and pinouts to communicate effectively with management devices such as laptops.

IN THIS SECTION

- Management Cable Specifications for ACX7509 Routers | **94**
- RJ-45 to DB-9 Serial Port Adapter Pinout Information | **94**
- Console/ToD Port Connector Pinout on ACX7509 Routers | **95**

- USB Port Specifications for the ACX7509 Routers | 96

Management Cable Specifications for ACX7509 Routers

Table 37 on page 94 lists the specifications for the cables that connect the console and management ports on Juniper Networks devices to management devices such as laptops.

Table 37: Specifications of Cables to Connect to Management Devices

Type of port	Cable specification	Receptacle	Additional information
RJ-45 console port	CAT5e unshielded twisted pair (UTP) cable	RJ-45	"Connect an ACX7509 Router to a Management Console" on page 113
Management Ethernet port	Ethernet cable with an RJ-45 connector	RJ-45	"Connect an ACX7509 Router to a Network for Out-of-Band Management" on page 114

RJ-45 to DB-9 Serial Port Adapter Pinout Information

The console port is an RS-232 serial interface that uses an RJ-45 connector to connect to a management device such as a laptop or a desktop PC. If your laptop or desktop PC does not have a DB-9 plug connector pin and you want to connect your laptop or desktop PC to the device, use a combination of the RJ-45 to DB-9 socket adapter along with a USB to DB-9 plug adapter. This table provides the pinout information for the RJ-45 to DB-9 serial port adapter.

RJ-45 Pin	Signal	DB-9 Pin	Signal
3	TxD	2	RxD

(Continued)

RJ-45 Pin	Signal	DB-9 Pin	Signal
6	RxD	3	TxD
7	DCD	1	DCD

Console/ToD Port Connector Pinout on ACX7509 Routers

The console/ToD port (labeled CON) on the Routing and Control Board (RCB) panel is a multiplexed connector for both console and ToD. Console and ToD are RS-232 serial interfaces. A split cable is needed for using both Console and ToD together. If the console port alone is used, then the split cable is not needed. When the split cable is used, console logout on disconnect will not be supported. The baud rate for the console port must be set to 115200 baud.

Use a cable with the pinouts described in Table 38 on page 95 to connect an ACX7509 to a console management device.

NOTE: If your laptop or PC does not have a DB-9 pin contact and you want to connect your laptop or PC directly to an ACX7509, use a combination of the RJ-45 to DB-9 socket adapter and a USB to DB-9 plug adapter. You must provide the USB to DB-9 plug adapter.

Table 38: Console Port and TOD Connector Pinouts for the ACX7509

Pin	Signal	Input/Output
2	ToD TXD	OUT
3	Console TXD	OUT
6	Console RXD	IN
7	Console DCD/ToD RXD	IN

USB Port Specifications for the ACX7509 Routers

The following Juniper Networks USB flash drives have been tested and are officially supported for the USB port in the ACX7509 routers:

- RE-USB-1G-S—1-gigabyte (GB) USB flash drive
- RE-USB-2G-S—2-GB USB flash drive
- RE-USB-4G-S—4-GB USB flash drive

CAUTION: Any USB memory product not listed as supported for the ACX7509 routers has not been tested by Juniper Networks. The use of any unsupported USB memory product could expose your device to unpredictable behavior. Juniper Networks Technical Assistance Center (JTAC) can provide only limited support for issues related to unsupported hardware. We strongly recommend that you use only supported USB flash drives.

CAUTION: Remove the USB flash drive before upgrading Junos OS Evolved or rebooting ACX7509 routers. Failure to do so could expose your device to unpredictable behavior.

NOTE: USB flash drives used with the ACX7509 router must support USB 2.0 or later.

CHAPTER 3

Initial Installation and Configuration

ACX7509 Router Installation Overview | 98

Unpack an ACX7509 Router | 99

Install the ACX7509 in a Rack | 104

Connect an ACX7509 Router to External Devices | 112

Register Products—Mandatory to Validate SLAs | 115

Connect Earth Ground to ACX7509 Routers | 115

Connect Power to the ACX7509 Router | 118

Perform Initial Software Configuration of the ACX7509 Router | 126

ACX7509 Router Installation Overview

Following is a description of the steps that you complete to install and connect the ACX7509 router:

1. Prepare your installation site as described in "Site Preparation Checklist for ACX7509 Routers" on page 64 .
2. Review the safety guidelines explained "ACX7509 Site Guidelines and Requirements" on page 65 .
3. Unpack the router and verify the parts, as follows:
   a. "Unpack an ACX7509 Router" on page 99
   b. Verify the ACX7509 Router Parts Received
   c. "Register Products—Mandatory to Validate SLAs" on page 115
4. Lift the router onto the rack manually or by using a mechanical lift.

   NOTE: Because of the weight of the router, we recommend that you use a mechanical lift.

   - "Mount an ACX7509 in a Four-Post Rack Using a Mechanical Lift" on page 105
   - "Manually Mount an ACX7509 Router in a Four-Post Rack" on page 108
5. Connect cables to the network and external devices.
   a. "Connect an ACX7509 Router to a Management Console" on page 113
   b. "Connect an ACX7509 Router to a Network for Out-of-Band Management" on page 114
6. Connect the grounding cable as described in "Connect Earth Ground to ACX7509 Routers" on page 115 .

   WARNING: To meet safety and electromagnetic interference (EMI) requirements and to ensure proper operation, you must properly ground the services gateway chassis before connecting power.
7. Follow the relevant instructions for connecting power for your site.
   - "Connect AC Power to an ACX7509 Router" on page 119
   - "Connect DC Power to the ACX7509 Router" on page 121

8. Perform initial configuration by following the instructions in "Perform Initial Software Configuration of the ACX7509 Router" on page 126 .

Unpack an ACX7509 Router

SUMMARY

Unpack the router using the recommended tools and following the recommended procedure.

IN THIS SECTION

- Tools and Parts Required to Unpack the ACX7509 Router | **99**
- Unpack the ACX7509 Shipping Pallet | **100**
- Unpack the ACX7509 Flexible PIC Concentrators, Routing Control Boards, and Forwarding Engine Boards | **100**
- Compare the ACX7509 Order to the Packing List | **101**

- "Tools and Parts Required to Unpack the ACX7509 Router" on page 99
- "Unpack the ACX7509 Shipping Pallet" on page 100
- "Unpack the ACX7509 Flexible PIC Concentrators, Routing Control Boards, and Forwarding Engine Boards" on page 100
- "Compare the ACX7509 Order to the Packing List" on page 101

Tools and Parts Required to Unpack the ACX7509 Router

To unpack the router and prepare for installation, you need the following tools:

- Phillips (+) screwdriver, number 2
- 1/2-in. or 13-mm open-end or socket wrench to remove bracket bolts from the shipping pallet
- A box cutter or packing knife to slice open the nylon straps and tape that seal the crate and boxes
- Blank panels to cover any slots not occupied by a component

Unpack the ACX7509 Shipping Pallet

After you prepare the installation site as described in you can unpack the router.

The ACX7509 router chassis is a rigid sheet-metal structure that houses the hardware components. The chassis ships in a cardboard box that has a two-layer wooden pallet base with foam cushioning between the layers. The router chassis is bolted to the pallet base. The carton also contains an accessory box and a rack-mount kit.

NOTE: ACX7509 routers are maximally protected inside the shipping carton. Do not unpack the router until you are ready to begin installation.

To unpack the chassis:

1. Move the shipping box to a staging area as close to the installation site as possible. While the chassis is bolted to the pallet, you can use a forklift or pallet jack to move the shipping box. Make sure there is enough space to remove components from the chassis.
2. Position the shipping box with the arrows pointing up.
3. Use the box cutter to slice the nylon straps that secure the shipping box to the pallet.
4. Lift the shipping box off the chassis.
5. Remove the cardboard accessory box.
6. Remove the foam padding from the top of the box.
7. Remove the plastic cover from the router chassis.
8. Use a mechanical lift or unload all of the components manually. Then, manually lift the chassis from the shipping pallet.
9. Unpack the accessory box, and lay out the contents so that they are ready for use.
10. Verify that your order includes all appropriate parts.
11. Save the shipping box and packing materials in case you need to move or ship the router at a later time.

Unpack the ACX7509 Flexible PIC Concentrators, Routing Control Boards, and Forwarding Engine Boards

Before you unpack a component, ensure that you have taken the necessary precautions to prevent electrostatic discharge (ESD) damage. See "Prevention of Electrostatic Discharge Damage" on page 206.

Flexible PIC Concentrators (FPCs), additional Routing and Control Boards (RCBs), and additional Forwarding Engine Boards (FEBs) are field-replaceable units (FRUs) that are shipped separately from the router chassis. The housings for the RCBs and FPCs are rigid sheet-metal structures. The housing for a FEB consists of an exposed printed circuit board (PCB) on one side and sheet metal on the other. All these components—the FRUs and the housings—are shipped in a cardboard carton, secured with packing material.



CAUTION: The components are maximally protected inside the shipping carton. Do not unpack them until you are ready to install the components in the router chassis.

To unpack an RCB, a FEB, or a FPC:

1. Move the shipping carton to a staging area as close to the installation site as possible.
2. Position the carton so that the arrows are pointing up.
3. Open the top flaps on the shipping carton.
4. Pull out the packing material that holds the component in place.
5. Remove the component from the antistatic bag.
6. Save the shipping carton and packing materials in case you need to move or ship the RCB, FEB, or FPC later.

Compare the ACX7509 Order to the Packing List

The router chassis shipment includes a packing list. Check the parts you receive in the shipping crate against the items on the packing list. The packing list specifies the part number and description of each part in your order.

The following items ship separately from the chassis:

- FPCs
- Cable management system

To compare the sales order and packing list against the contents of the chassis shipping crate:

1. Determine the configuration. The parts shipped depend on the configuration you order. These are the supported configurations:
   - ACX7509-BASE—Base configuration, AC/HVDC or DC with one ACX7509-FEB
   - ACX7509-PREMIUM—Premium redundant configuration, AC/HVDC or DC with two ACX7509-FEBs
2. Compare the packing list accompanying the chassis with the configuration order.

- For BASE configuration orders, see Table 39 on page 102.
- For PREMIUM configuration orders, see Table 40 on page 103.

Table 39: BASE Configuration Order

Component	Quantity
Router, including the midplane and mounting brackets	1
ACX7509-RCB (Routing and Control Board)	1
JNP5K-RCB-BLNK—Blank for an empty RCB slot	1
ACX7509-FEB (Forwarding Engine Board)	1
Blank for an empty FEB slot	1
Power supply JNP-3000W-AC-AFO or JNP-3000W-DC-AFO	2
Blanks for empty power slots	2
JNP5700-FAN (fan tray)	2
Cable management system	1
JNP5K-FPC-BLNK—Blanks for empty FPC slots	9
Accessory kit	1

Table 40: PREMIUM Configuration Order

Component	Quantity
Router, including the midplane and mounting brackets	1
ACX7509-RCB (Routing and Control Board)	2
ACX7509-FEB (Forwarding Engine Board)	2
Power supply JNP-3000W-AC-AFO or JNP-3000W-DC-AFO	4
JNP5700-FAN (fan tray)	2
Cable management system	1
JNP5K-FPC-BLNK—Blanks for empty FPC slots	9
Accessory kit	1

3. Compare the contents of the accessory kit with Table 41 on page 103.

Table 41: ACX7509 Accessory Kit

Component	Quantity
Warranty card	1
End User License Agreement (EULA)	1
Media kit (USB flash drives)	1
Documentation Roadmap card	1

Table 41: ACX7509 Accessory Kit *(Continued)*

Component	Quantity
RJ-45 Ethernet cable	1
RJ-45 to DB-9 serial port adapter	1
RJ-45 Y-splitter cable	1
DC power cable lug (for DC installations)	8
AC power cord (country specific)	2
ESD strap with cable	1

4. If any part on the packing list is missing, contact your customer service representative, or contact Juniper Networks Customer Care from within the U.S. or Canada by telephone at 1-888-314-5822. For international-dial or direct-dial options in countries without toll-free numbers, see https://www.juniper.net/support/requesting-support.html.

Install the ACX7509 in a Rack

SUMMARY

Use the information in this topic to install the ACX7509 router in a rack using a mechanical lift or manually.

IN THIS SECTION

- Mount an ACX7509 in a Four-Post Rack Using a Mechanical Lift | **105**
- Manually Mount an ACX7509 Router in a Four-Post Rack | **108**

You can install a ACX7509 router into a four-post rack or a cabinet by using a mechanical lift, or you can install it manually.

Complete these prerequisities before you install the router:

- Prepare the site for installation as described in "Site Preparation Checklist for ACX7509 Routers" on page 64.
- Be sure the site has adequate clearance for both airflow and hardware maintenance, as described in "Clearance Requirements for Airflow and Hardware Maintenance of ACX7509 Routers" on page 70.
- Unpack the router as described in "Unpack an ACX7509 Router" on page 99.

CAUTION: Do not install FPCs in the chassis until after you mount the chassis securely on a rack or in a cabinet.

CAUTION: Before mounting the router on a rack or in a cabinet, have a qualified technician verify that the rack or cabinet is strong enough to support the router's weight. Have the technician verify also that the rack or cabinet is adequately supported at the installation site.

CAUTION: If you are installing more than one router on a rack or in a cabinet, install the first router at the bottom of the rack.

Mount an ACX7509 in a Four-Post Rack Using a Mechanical Lift

Be sure that you have the following parts and tools available to install the router:

- A mechanical lift rated for 250 lb (113.4 kg)
- Twenty mounting screws appropriate for your rack (not provided)
- A Phillips (+) screwdriver, number 1, 2, or 3, depending on the size of your rack-mounting screws

Because of the router's size and weight, we strongly recommend that you use a mechanical lift to install the ACX7509 router.

To install the router using a mechanical lift:

1. Wrap and fasten one end of the ESD wrist strap around your bare wrist, and connect the other end of the strap to the ESD point on the device.
2. Using a Phillips screwdriver, remove the screw on each side of the chassis that holds the rear-mounting blades to the chassis.

3. Slide the mounting blades out of the channels.

Figure 25: Removing the Rear-Mounting Blades

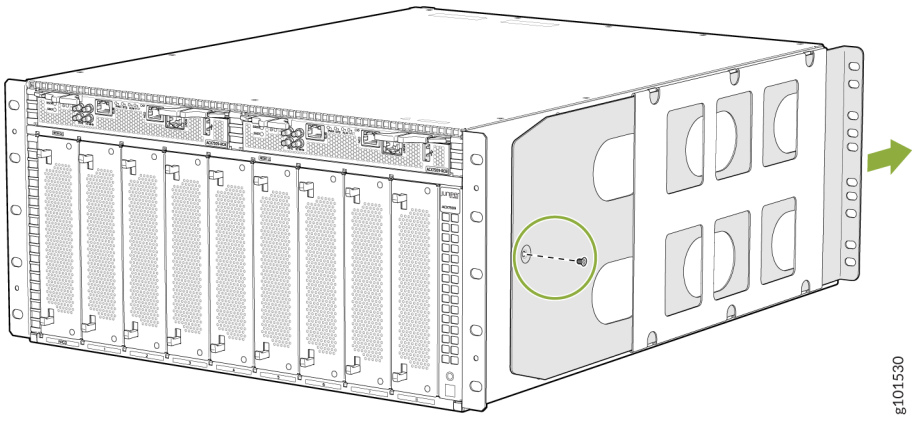

4. Load the router onto the lift, making sure it rests securely on the lift platform.

Figure 26: Load the ACX7509 Router onto a Mechanical Lift

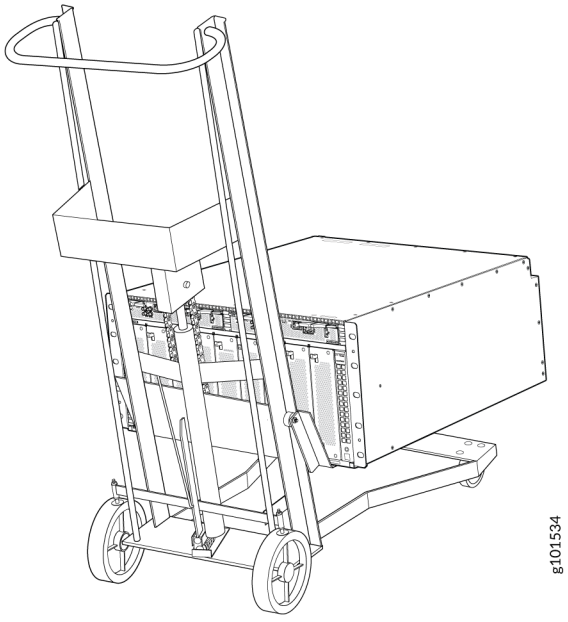

5. Using the lift, align the router in front of the rack.

6. Carefully position the chassis in the rack until the holes of the front-mounting brackets align with the holes in the rack rails.

Figure 27: Install the ACX7509 Router in a Four-Post Rack

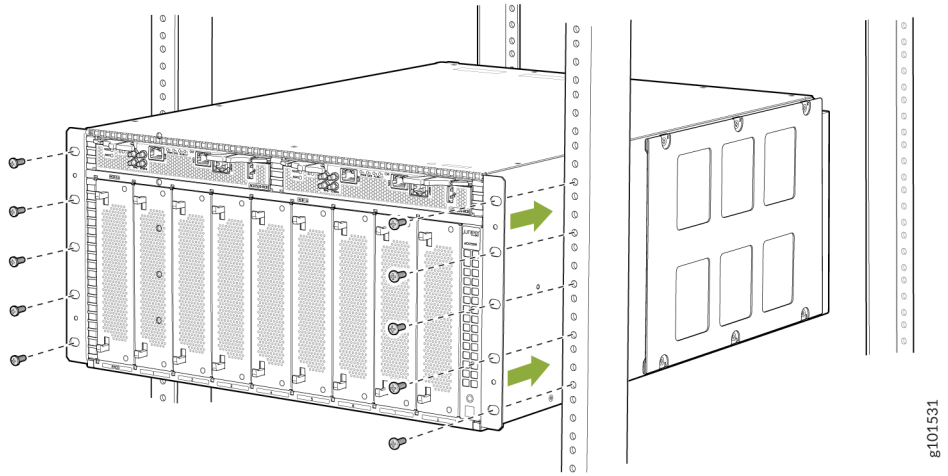

7. Install mounting screws into each of the front-mounting bracket holes aligned with the rack, starting from the bottom, and tighten the screws.

8. On the rear of the chassis, slide the rear-mounting blades into the channels on either side of the chassis until the rear-mounting brackets at the end of the blades contact the rack rails.

Figure 28: Install the Rear-Mounting Blades on an ACX7509 Router

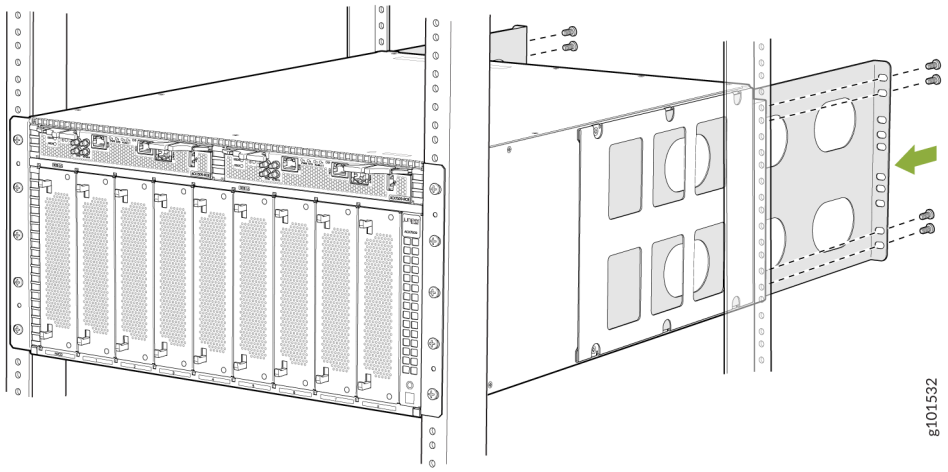

9. Install mounting screws into each of the rear-mounting bracket holes aligned with the rack, starting from the bottom, and secure them tightly.

10. Visually inspect the alignment of the chassis.

    If you've installed the chassis properly in the rack, all the mounting screws on one side of the rack are aligned with the mounting screws on the opposite side, and the router is level. Figure 29 on page 108 shows the router fully secured and installed in a four-post rack.

Figure 29: ACX7509 Router Installed in a Four-Post Rack

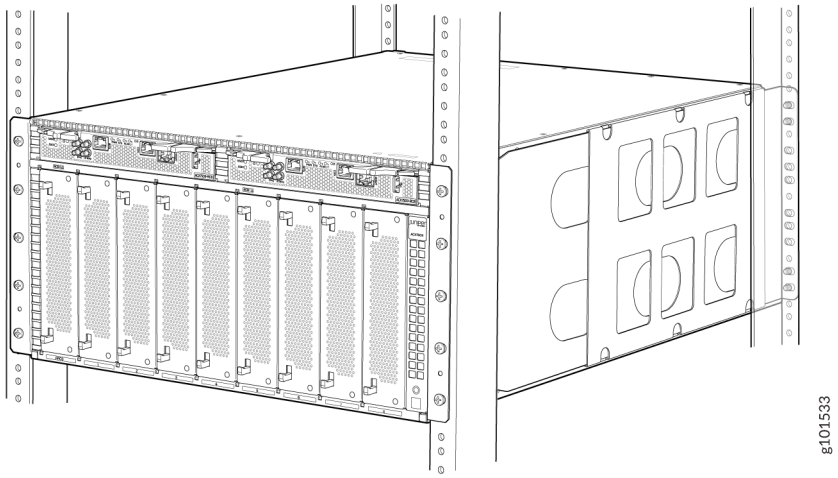

11. Move the lift away from the rack.

12. If you have removed any pre-installed FRUs, reinstall them.

Manually Mount an ACX7509 Router in a Four-Post Rack

NOTE: The router weighs approximately 153.8 lb (70 kg) with all FRUs installed. Lifting the chassis and mounting it on a rack or in a cabinet requires at least three people. Make sure the chassis is empty (contains only the midplane) before you lift it.

Before you install the router, remove the FRUs if pre-installed:

- "Remove the Routing and Control Board from the ACX7509 Router" on page 142

- "Remove the Forwarding Engine Board from the ACX7509 Router" on page 147
- "Remove a Flexible PIC Concentrator from the ACX7509 Router" on page 152
- "Remove a Fan Tray from the ACX7509 Router" on page 131
- One of the following:
  - "Remove an AC/HVDC Power Supply from the ACX7509 Router" on page 136
  - "Remove a DC Power Supply from the ACX7509 Router" on page 139

Be sure that you have the following parts and tools available to install the router:

- Twenty mounting screws appropriate for your rack (not provided)
- A Phillips (+) screwdriver, number 1, 2, or 3, depending on the size of your rack-mounting screws

To manually install the router in the rack or cabinet:

1. Wrap and fasten one end of the ESD wrist strap around your bare wrist, and connect the other end of the strap to the ESD point on the device.
2. Using a Phillips screwdriver, remove the screw on each side of the chassis that holds the rear-mounting blades to the chassis.
3. Slide the mounting blades out of the channels.

Figure 30: Removing the Rear-Mounting Blades

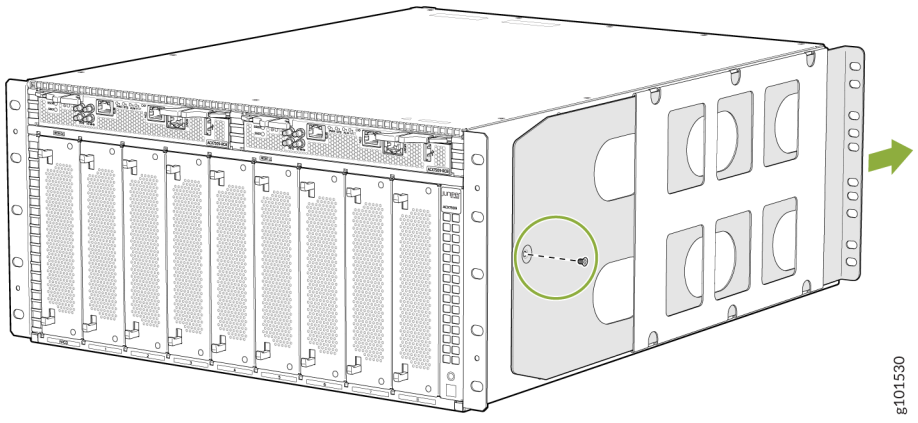

4. With one person on each side, hold onto the bottom of the chassis. Carefully lift the chassis and position it in the rack so that the front brackets are aligned with the rack holes.

Figure 31: Lift the Chassis by Hand

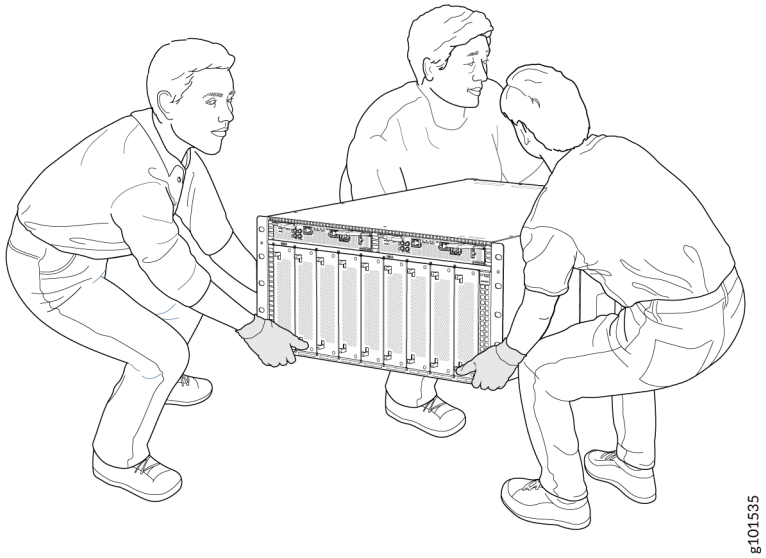

Figure 32: Install the ACX7509 Router in a Four-Post Rack

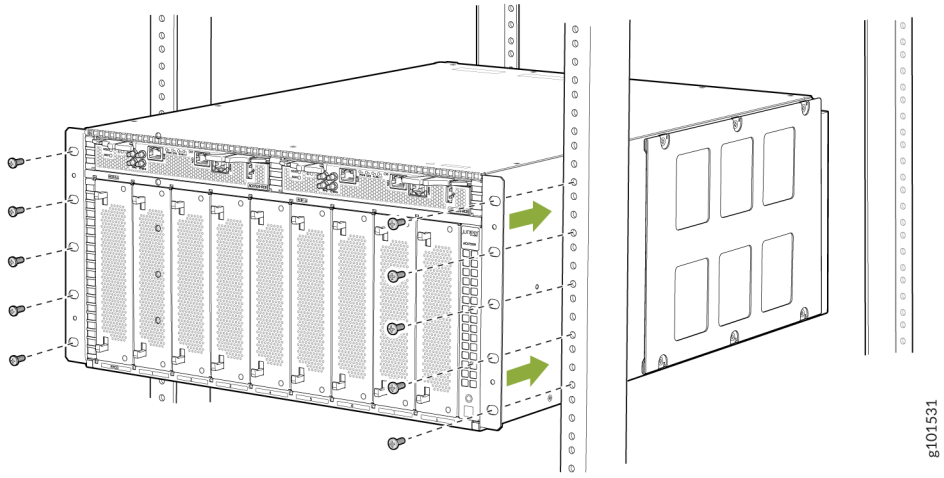

5. With the two other people continuing to support the chassis, install mounting screws into each of the front-mounting bracket holes aligned with the rack. Start from the bottom, and tighten the screws.

6. On the rear of the chassis, slide the rear-mounting blades into the channels on either side of the chassis until the rear-mounting brackets at the end of the blades contact the rack rails.

Figure 33: Install the Rear-Mounting Blades on an ACX7509 Router

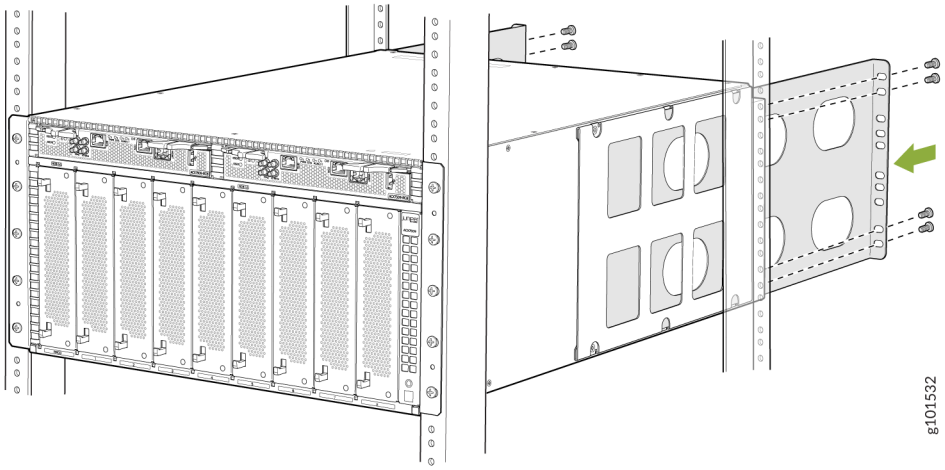

7. Install mounting screws into each of the rear-mounting bracket holes aligned with the rack, starting from the bottom, and secure them tightly.

8. Visually inspect the alignment of the chassis.

If you've installed the chassis properly in the rack, all the mounting screws on one side of the rack are aligned with the mounting screws on the opposite side, and the router is level. Figure 34 on page 112 shows the router fully secured and installed in a four-post rack.

Figure 34: ACX7509 Router Installed in a Four-Post Rack

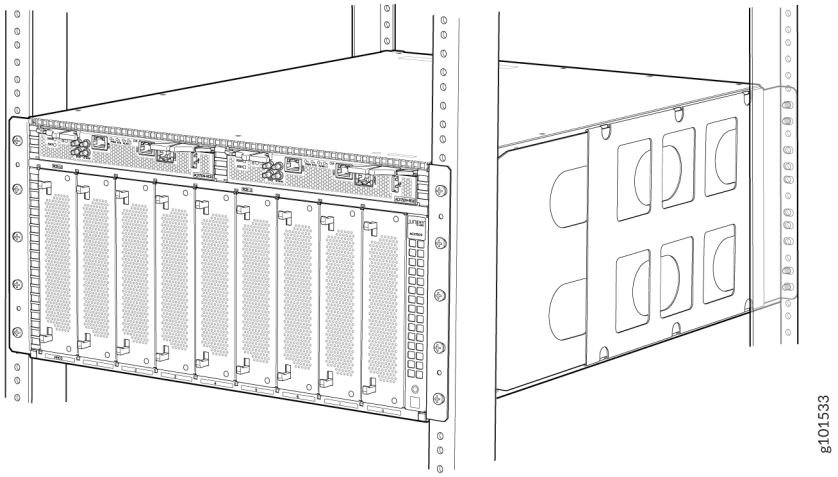

9. If you have removed any pre-installed FRUs, reinstall them.

Connect an ACX7509 Router to External Devices

SUMMARY

You configure and manage the ACX7509 router using a dedicated management channel. The Routing and Control Board (RCB) in the ACX7509 router has a console port that you connect to using an Ethernet cable with an RJ-45 connector.

IN THIS SECTION

- Connect an ACX7509 Router to a Management Console | **113**
- Connect an ACX7509 Router to a Network for Out-of-Band Management | **114**
- Connect an ACX7509 Router to External Clocking and Timing Devices | **114**

Connect an ACX7509 Router to a Management Console

Use the console port to connect the router to the console server or management console. The console port accepts a cable that has an RJ-45 connector.

Ensure that you have an RJ-45 to DB-9 rollover cable available. An RJ-45 cable with an RJ-45 to DB-9 adapter is provided with the device.

NOTE: If your laptop or PC does not have a DB-9 plug connector pin and you want to connect your laptop or PC directly to the RCB, use a combination of the RJ-45 cable and RJ-45 to DB-9 adapter (provided) and a USB to DB-9 plug adapter (not provided).

To connect the ACX7509 router to a management console:

1. Connect one end of the Ethernet cable to the **CON** port on the RCB of the router.
2. Connect the other end of the Ethernet cable to the console server (see Figure 35 on page 113) or management console (see Figure 36 on page 113).

Figure 35: Connecting the ACX7509 Router to a Management Console Through a Console Server

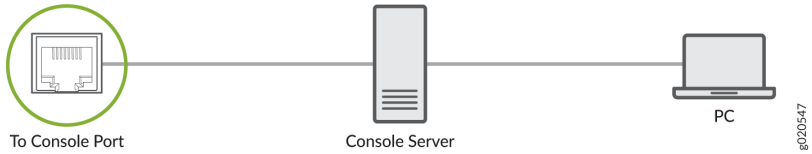

Figure 36: Connecting the ACX7509 Router Directly to a Management Console



Connect an ACX7509 Router to a Network for Out-of-Band Management

You can monitor and manage the ACX7509 router by using a dedicated management channel. The Routing and Control Board (RCB) has a management port to which you can connect an Ethernet cable with an RJ-45 connector. Use the management port to connect the ACX7509 router to a network for out-of-band management.

Ensure that you have an appropriate cable available. See "ACX7509 Transceiver Support and Network Cable Planning" on page 81.

To connect the router to a network for out-of-band management:

1. Connect one end of the Ethernet cable to the **MGMT** port on the RCB.
2. Connect the other end of the Ethernet cable to the management device.

Figure 37: Connect an ACX7509 Router to a Network for Out-of-Band Management

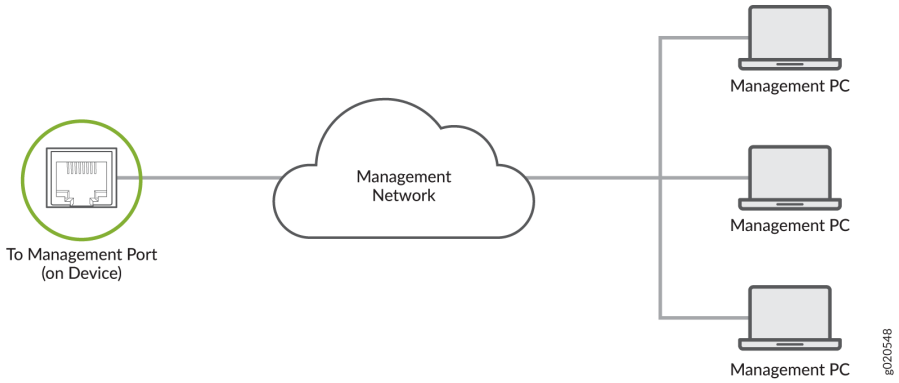

Connect an ACX7509 Router to External Clocking and Timing Devices

The RCB has four DIN connector ports that support 1-PPS and 10-MHz Input and Output connectors.

NOTE: Ensure that you use a cable of 3 m or less in length for the 10-MHz and 1-PPS connectors.

To connect the DIN-to-BNC coaxial cable to the external clocking input port:

1. Connect one end of the DIN-to-BNC coaxial cable to either the 1-PPS connector or the 10-MHz connector on the router.
2. Connect the other end of the DIN-to-BNC coaxial cable to the 1-PPS or 10-MHz measurement equipment.

NOTE: Ensure that the 10-MHz or 1-PPS source network equipment contains low-voltage complementary metal oxide semiconductor (CMOS) or is compatible with low-voltage (3.3 V) transistor-transistor logic (TTL).

Register Products—Mandatory to Validate SLAs

Register all new Juniper Networks hardware products and changes to an existing installed product using the Juniper Networks website. Registering products and changes to products activates your hardware replacement service-level agreements (SLAs).

CAUTION: Register product serial numbers on the Juniper Networks website. Update the installation base data if any installation base data is added or changed or if the installation base is moved. Juniper Networks will not be held accountable for customers not meeting the hardware replacement service-level agreement (SLA) for products that do not have registered serial numbers or accurate installation base data.

Register your product or products at https://tools.juniper.net/svcreg/SRegSerialNum.jsp.

Update your installation base at https://www.juniper.net/customers/csc/management/updateinstallbase.jsp.

Connect Earth Ground to ACX7509 Routers

To meet safety and electromagnetic interference (EMI) requirements and to ensure proper operation, you must connect the ACX7509 router to an earth ground before you connect it to power.

You must install the ACX7509 router in a restricted-access location and ensure that the chassis is always properly grounded. The ACX7509 router has a two-hole protective grounding terminal on the chassis. Always use this grounding connection to ground the chassis. For AC-powered systems, you must use the grounding wire in the AC power cord along with the two-hole grounding lug connection. This tested

system meets or exceeds all applicable electromagnetic compatibility (EMC) regulatory requirements with the two-hole protective grounding terminal.

Before you connect an earth ground to the protective earthing terminal of an ACX7509 router, ensure that a licensed electrician has attached an appropriate grounding lug to the grounding cable.



CAUTION: Using a grounding cable with an incorrectly attached lug can damage the ACX7509 router.

NOTE: An AC-powered ACX7509 router chassis gains additional grounding when you plug the power supply into a grounded AC power outlet by using an AC power cord appropriate for your geographical location.

Before connecting the router to an earth ground, ensure that you have the following parts and tools available:

- An electrostatic discharge (ESD) grounding strap (provided).
- Protective earthing terminal lug (provided).
- Grounding cable for your router—The grounding cable must be 4 AWG (21.2 mm^2) stranded wire should be rated 90° C or per local electrical code.
- Grounding lug for your grounding cable (not provided)—This bracket attaches to the lower left corner of the router chassis next to the bottom power supply, providing a protective earthing terminal for the router. The grounding lug required is a Panduit LCD6-14A-L or equivalent.
- A Phillips screwdriver (not provided) to tighten the two screws that are mounted on the chassis.

The Panduit LCD4-14A-L terminal lugs, or equivalent are sized for 4 AWG (21.1 mm2) power source cables. The 4 AWG (21.1 mm^2) stranded wire should be rated 90° C or per local electrical code. We recommend that you install heat-shrink tubing insulation around the crimped section of the power cables and lugs.

To ground the ACX7509 router:

1. Verify that a licensed electrician has attached the cable lug provided with the router to the grounding cable.
2. Ensure that all grounding surfaces are clean and shiny before making the grounding connections.
3. Connect the grounding cable to a proper earth ground, such as the rack in which the router is mounted.

4. Wrap and fasten one end of the ESD grounding strap around your bare wrist and connect the other end of the strap to one of the ESD points on the chassis. See Figure 38 on page 117.

Figure 38: ESD Point on the Rear of the Chassis

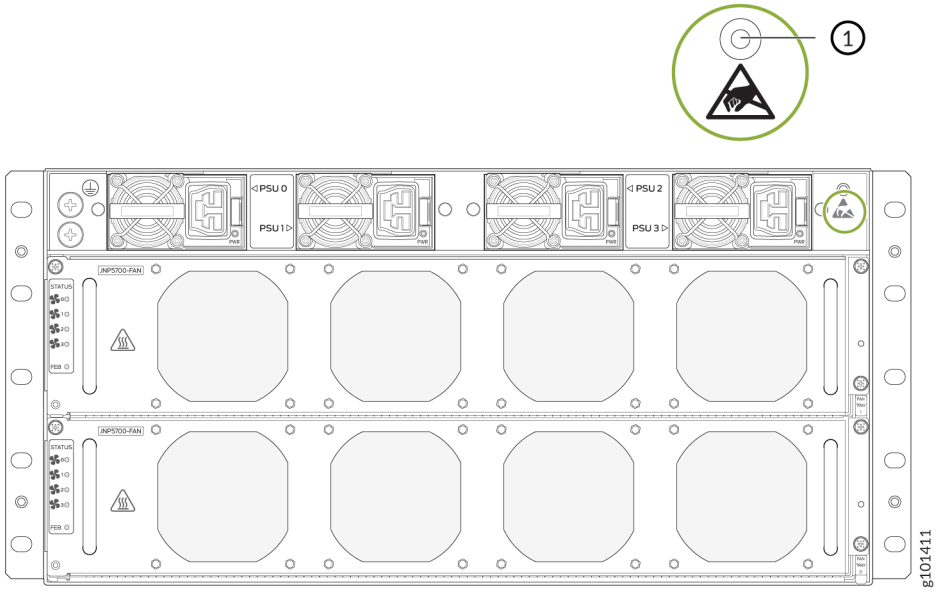

1– ESD point

5. Remove the two M6 screws with attached washers on the chassis using a Phillips screwdriver.
6. Place the chassis grounding lug and cable over the screw holes with the cable connection pointing to the left.
7. Place the two screws with attached washers over the grounding lug and grounding cable.

8. Secure the grounding cable lug with the M6 screws attached with washers. See "Connect Earth Ground to ACX7509 Routers" on page 115

Figure 39: Connect a Grounding Cable to the ACX7509 Router

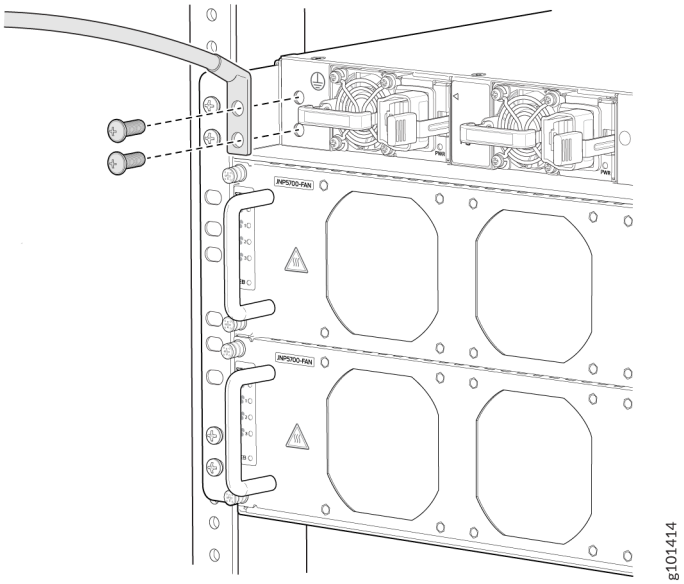

9. Verify that the grounding cable does not touch or block access to router components, and make sure that it does not trail across the floor where people could trip over it.

Connect Power to the ACX7509 Router

SUMMARY

Connecting the correct power current to the ACX7509 router involves numerous steps and safety precautions to prevent equipment damage and personal injury.

IN THIS SECTION

- Connect AC Power to an ACX7509 Router | **119**
- Connect DC Power to the ACX7509 Router | **121**

NOTE: To meet safety and electromagnetic interference (EMI) requirements and to ensure proper operation, you must connect the ACX7509 router to an earth ground before you connect it to power.

CAUTION: Do not mix AC and DC power supplies in the same chassis.

Connect AC Power to an ACX7509 Router

The AC power supply modules (PSMs) in an ACX7509 router are hot-removable and hot-insertable field-replaceable units (FRUs). You can remove and replace the PSMs without powering off the router or disrupting routing functions.

Before you begin to connect AC power to the router:

- Ensure that you have connected the router chassis to an earth ground.

  CAUTION: Before you connect power to the router, a licensed electrician must attach a cable lug to the grounding and power cables that you supply. A cable with an incorrectly attached lug can damage the router (for example, by causing a short circuit). To meet safety and electromagnetic interference (EMI) requirements and to ensure proper operation, you must connect the chassis to an earth ground before you connect it to power. For installations that require a separate grounding conductor to the chassis, use the protective earthing terminal on the router chassis to connect to the earth ground. The router gains additional grounding when you plug the PSM in the router to a grounded AC power outlet by using the AC power cord appropriate for your geographical location.

- Ensure that you have a power cord appropriate for your geographical location available to connect AC power to the router.
- Read "General Electrical Safety Guidelines and Warnings" on page 205 and "Action to Take After an Electrical Accident" on page 217 .
- Ensure that you have taken the necessary precautions to prevent electrostatic discharge (ESD) damage (see "Prevention of Electrostatic Discharge Damage" on page 206).

- Ensure that you have an ESD grounding strap.
- If not already installed, install the power supplies in the router.

NOTE: Each power supply must be connected to a dedicated power source outlet.

To connect AC power to a ACX7509 router:

1. Wrap and fasten one end of the ESD wrist strap around your bare wrist, and connect the other end of the strap to the ESD point on the device.
2. Ensure that the power supplies are fully inserted into the chassis and the latches are secure.
3. Locate the AC power cords shipped with the ACX7509 router; the cords have plugs appropriate for your geographical location.
4. Insert the coupler end of the power cord into the AC power cord inlet on the AC power supply faceplate (see Figure 40 on page 120).

Figure 40: Connecting an AC Power Cord

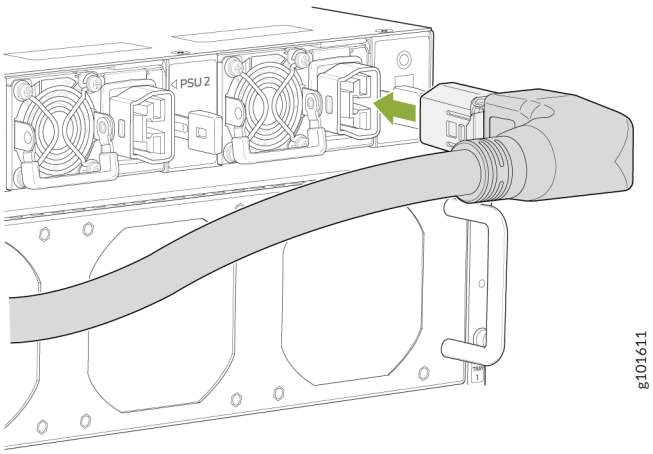

5. If the AC power source outlet has a power switch, set it to the off (O) position.
6. **NOTE**: The ACX7509 router powers on as soon as power is provided to the PSM. There is no power switch on the router.

   Insert the power cord plug into an AC power source outlet.
7. If the AC power source outlet has a power switch, set it to the on (|) position.
8. Verify that the status LEDs on each power supply are lit green.

If the status LED is lit amber, remove power from the power supply, and replace the power supply. Do not remove the power supply until you have a replacement power supply ready.

Connect DC Power to the ACX7509 Router

The DC power supply modules (PSMs) in an ACX7509 router are hot-removable and hot-insertable field-replaceable units (FRUs). You can remove and replace the DC PSMs without powering off the router or disrupting routing functions.

WARNING: DC-powered ACX7509 routers are intended for installation only in a restricted-access location.

NOTE: The battery return of the DC power supply must be connected as an isolated DC return (DC-I).

Before you begin to connect DC power to the ACX7509 router:

- Ensure that you have connected the ACX7509 router chassis to an earth ground.

  CAUTION: Before you connect power to the router, a licensed electrician must attach a cable lug to the grounding and power cables that you supply. A cable with an incorrectly attached lug can damage the router (for example, by causing a short circuit). See "Connect Earth Ground to ACX7509 Routers" on page 115.

  NOTE: To meet safety and electromagnetic interference (EMI) requirements and to ensure proper operation, you must connect the chassis to an earth ground before you connect it to power. For installations that require a separate grounding conductor to the chassis, use the protective earthing terminal on the ACX7509 router chassis to connect to the earth ground ("Connect Earth Ground to ACX7509 Routers" on page 115).

- Read "General Electrical Safety Guidelines and Warnings" on page 205 and "Action to Take After an Electrical Accident" on page 217 and the following DC power warnings:

  - "DC Power Disconnection Warning" on page 211
  - "DC Power Grounding Requirements and Warning" on page 212

- "DC Power Wiring Sequence Warning" on page 213
- "DC Power Wiring Terminations Warning" on page 215

- Ensure that you have taken the necessary precautions to prevent electrostatic discharge (ESD) damage (see "Prevention of Electrostatic Discharge Damage" on page 206).
- Ensure that you have an ESD grounding strap.
- If not already installed, install the DC power supplies in the router.
- Ensure that you have the following parts and tools available:
  - Phillips (+) screwdriver, 1/4-in, with a torque range between 6 lb-in (0.68 Nm) and 7 lb-in (0.79 Nm) (not provided)

    CAUTION: You must use an appropriate torque-controlled tool to tighten the hex-nuts on the DC power cable connector. Do not over-tighten the hex-nuts. Applying excessive torque damages the terminal block and the wiring tray.

  - Power cable or cables appropriate for your geographical location to connect DC power to the ACX7509 router. We recommend that you use a 4 AWG gauge DC power cable such as a Panduit/LCDX4-14AH-L. The cable lugs are provided with the power supplies.

NOTE: Each power supply unit must be connected to a dedicated power source outlet.

To connect DC power to an ACX7509 router:

1. Attach an ESD grounding strap to your bare wrist, and connect the strap to an approved site ESD grounding point.
2. Ensure that the power supplies are fully inserted into the chassis and the latches are secure.
3. Ensure that the DC input current selector (DIP switch) is set to 80 A or 60 A.
4. Open the cable manager latch on the terminal block cover of a power supply unit.

5. Use a Phillips screwdriver to loosen the screw holding the cable manager latch to the power supply terminal block cover. See Figure 41 on page 123.

Figure 41: Removing the DC Power Supply Unit Cable Manger Latch

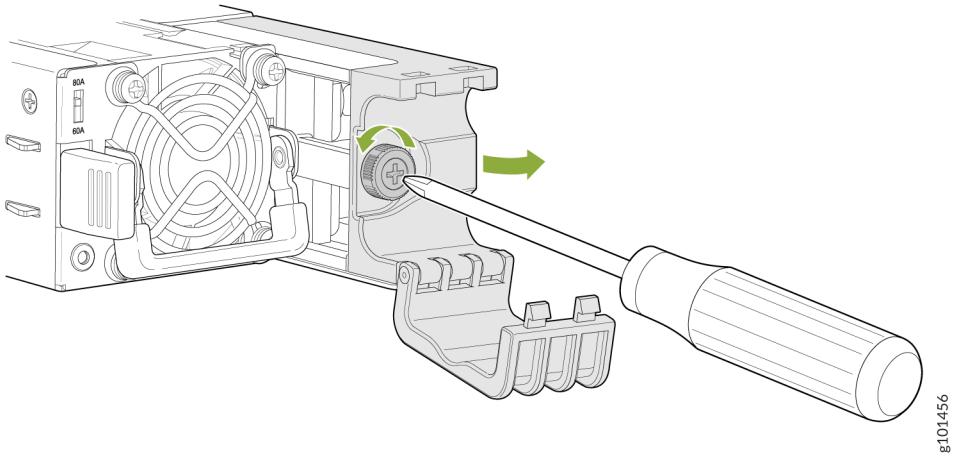

6. Remove the cable manager bracket to expose the four terminal studs.
7. Install heat-shrink tubing insulation around the power cables.

   To install heat-shrink tubing:

   a. Slide the tubing over the portion of the cable where it is attached to the lug barrel. Ensure that tubing covers the end of the wire and the barrel of the lug attached to it.

   b. Shrink the tubing with a heat gun. Ensure that you heat all sides of the tubing evenly so that it shrinks around the cable tightly.

   Figure 42 on page 124 shows the steps to install heat-shrink tubing.

NOTE: Do not overheat the tubing.

Figure 42: How to Install Heat-Shrink Tubing

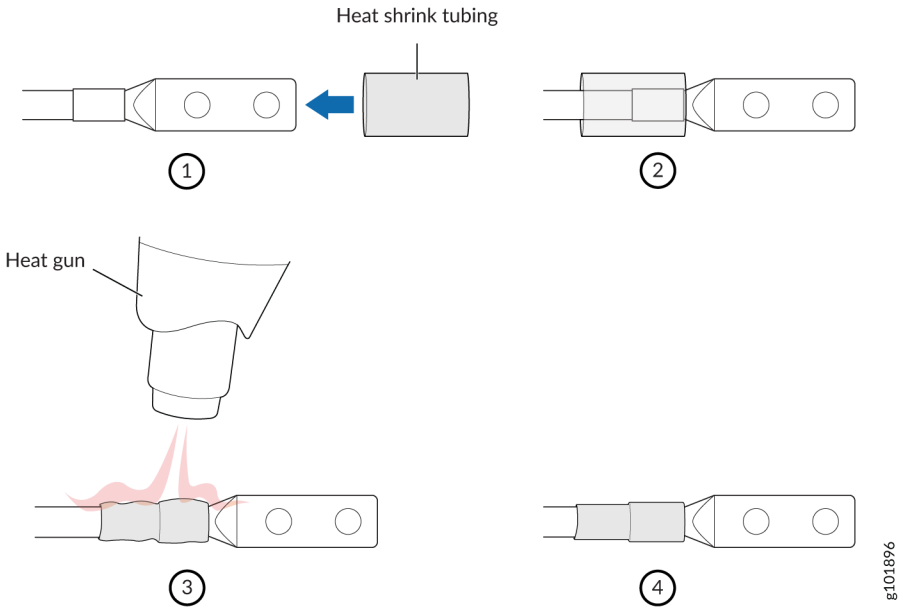

8. If you are using straight DC power cables, place the ends of the power cable connectors over the four terminal studs.

Figure 43: Connecting the DC Power Cables to Terminal Studs

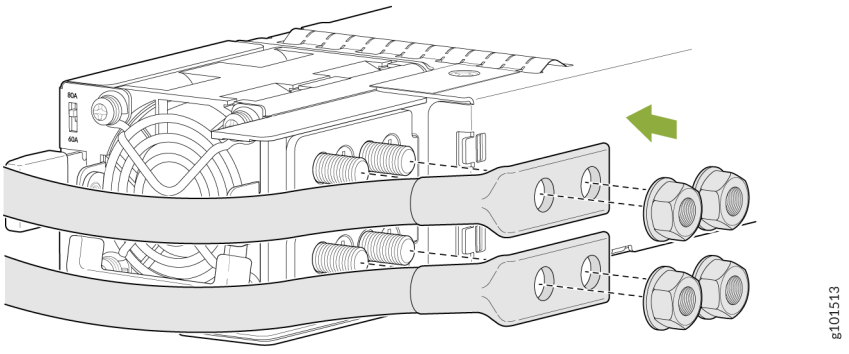

9. Secure the power cables to the four terminal studs with hex nuts.

10. Use a wrench to tighten the hex nuts by applying torque to between 6 lb-in (0.68 Nm) and 7 lb-in (0.79 Nm).

> **NOTE**: The ACX7509 router powers on as soon as power is provided to the power supply. There is no power switch on the router.

> ⚠ **CAUTION**: You must use an appropriate torque-controlled tool to tighten the hex nuts on the DC power cable connector. Do not over tighten the screws. Applying excessive torque damages the terminal block and the wiring tray.

11. Connect the power supply unit to an 80 A or 60 A power source.
12. Repeat Step 3 through Step 10 to connect the other DC power supplies.
13. Verify that the status LEDs on each power supply are lit green and on steadily. If the status LED is lit amber, follow these additional steps:
    a. Procure a replacement power supply.
    b. Remove power from the faulty power supply.
    c. With the replacement power supply ready to install, remove the faulty power supply and within 30 seconds install the replacement power supply.
14. Reattach the cable manager latch that you removed in Step 6, and tighten the thumb screw. See Figure 44 on page 125.

Figure 44: Reattaching the Cable Manager Latch

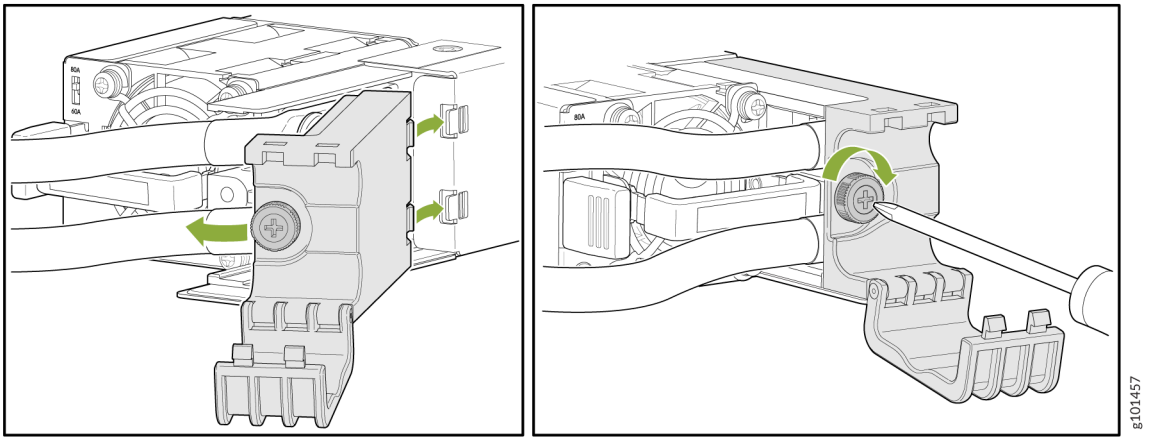

15. Close the cable manager latch to hold the power cables in place.

NOTE: Ensure that the power cables do not block access to device components or trail across the floor where people could trip over them.

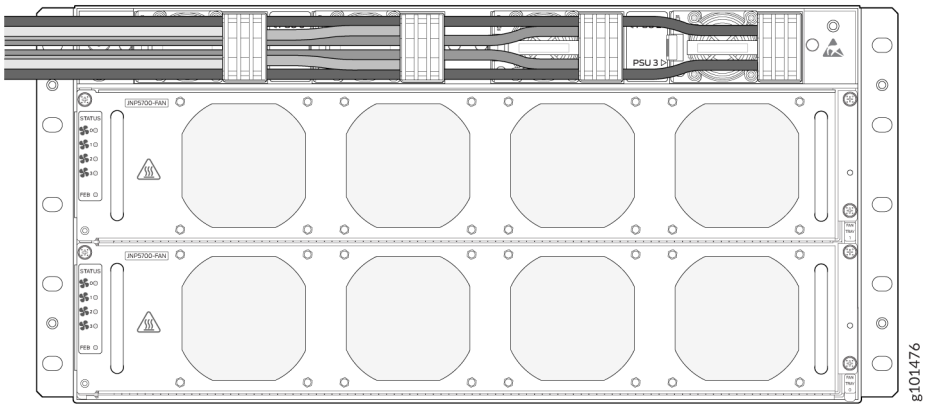

Perform Initial Software Configuration of the ACX7509 Router

Before you begin connecting and configuring an ACX7509 router, set the following parameter values on the console server or PC:

- Baud rate—9600
- Flow control—None
- Data—8
- Parity—None
- Stop bits—1
- DCD state—Supported

NOTE: When console is supported with DCD, TOD functionality cannot be supported. Console without DCD and TOD can be simultaneously supported when you use Y cable.

You must perform the initial configuration of an ACX7509 router through the console port by using the CLI.

To connect and configure the router from the console:

1. Check that the ACX7509 has power.
2. Connect the console (**CON**) port on the ACX7509 to a laptop or PC using the supplied RJ-45 cable and RJ-45 to DB-9 adapter. The console (**CON**) port is located on the Routing Engine of the router.

   NOTE: If your laptop or desktop PC doesn't have a serial port, use a serial-to-USB adapter (not provided).

3. Log in as **root**.

   There is no password. If the software booted before you connected to the console port, you might need to press the Enter key for the prompt to appear.

   ```
   login: root
   ```

4. Start the CLI.

   ```
   root@% cli
   ```

5. Enter configuration mode.

   ```
   root> configure
   ```

6. Add a password to the root administration user account.

   ```
   [edit]
   root@# set system root-authentication plain-text-password
   New password: password
   Retype new password: password
   ```

7. (Optional) Configure the name of the router. If the name includes spaces, enclose the name in quotation marks (“ ”).

   ```
   [edit]
   root@# set system host-name host-name
   ```

8. Configure the default gateway.

```
[edit]
root@# set system management-instance
root@# set routing-instances mgmt_junos routing-options static route prefix/prefix-length next-hop
default-gateway-ip-address
```

9. Configure the IP address and prefix length for the router's management interface.

```
[edit]
root@# set interfaces re0:mgmt-0 unit 0 family inet address ip-address/prefix-length
```

CAUTION: Although the CLI permits you to configure two management Ethernet interfaces within the same subnet, only one interface is usable and supported.

NOTE: The management ports, `em0` or `re0:mgmt-0` (MGMT for RJ-45 connections) and `em1` (also labeled MGMT for fiber connections), are found on the front of the RCBs of the ACX7509 Router.

10. (Optional) Configure the static routes to remote prefixes with access to the management port.

```
[edit]
root@# set routing-options static route remote-prefix next-hop destination-ip retain no-readvertise
```

11. Enable services such as SSH and Telnet.

NOTE: You will not be able to log in to the router as the root user through Telnet. Root login is allowed only through SSH.

```
[edit]
root@# set system services telnet
```

12. Commit the configuration to activate it on the router.

```
[edit]
root@# commit
```

4

CHAPTER

Maintaining Components

ACX7509 Fan Tray Maintenance | 131

ACX7509 Power Supply Maintenance | 134

ACX7509 Routing and Control Board Maintenance | 142

ACX7509 Forwarding Engine Board Maintenance | 145

ACX7509 Flexible PIC Concentrator Maintenance | 151

ACX7509 Cable Management System Maintenance | 156

ACX7509 Fan Tray Maintenance

SUMMARY

Maintaining the ACX7509 router includes removing and installing fan trays.

IN THIS SECTION

- Remove a Fan Tray from the ACX7509 Router | 131
- Install a Fan Tray in the ACX7509 Router | 133

The ACX7509 router has two independent, field-replaceable fan trays installed on the rear of the chassis.

The ACX7509 chassis has two independent, field-replaceable fan trays. Each fan tray is a hot-removable and hot-insertable field-replaceable unit (FRU), which means that you can remove and replace the fan trays while the router is running. You remove and replace the fan trays without turning off power to the router or disrupting routing functions.

Remove a Fan Tray from the ACX7509 Router

Before you remove a fan tray:

- Ensure that you understand how to prevent ESD damage.
- Ensure that you have the following parts and tools available to remove a fan tray from the ACX7509 router:
  - Electrostatic discharge (ESD) grounding strap
  - Replacement fan tray
  - A Phillips (+) screwdriver, number 1 or 2 (optional), for the captive screws



CAUTION: Do not remove the fan tray unless you have a replacement fan tray available.

CAUTION: The JNP5700-FAN fan tray can be removed and replaced while the router is operating. However, the fan tray must be replaced within three minutes of removing the fan tray to prevent overheating of the chassis. If you are removing a JNP5700-FAN in order to access an ACX7509-FEB Forwarding Engine Board (FEB), we recommend that you either perform the necessary work during a maintenance window or reinstate the fan tray within three minutes.

To remove an ACX7509 fan tray (JNP5700-FAN):

1. Wrap and fasten one end of the ESD grounding strap around your bare wrist, and connect the other end of the strap to one of the ESD points on the chassis.
2. Loosen the four captive screws with a Phillips screwdriver or by unscrewing the screws with your thumb and forefinger.
3. Grasp both the handles and pull the fan tray completely out of the chassis. See Figure 45 on page 132.

Figure 45: Removing a JNP5700-FAN Fan Tray

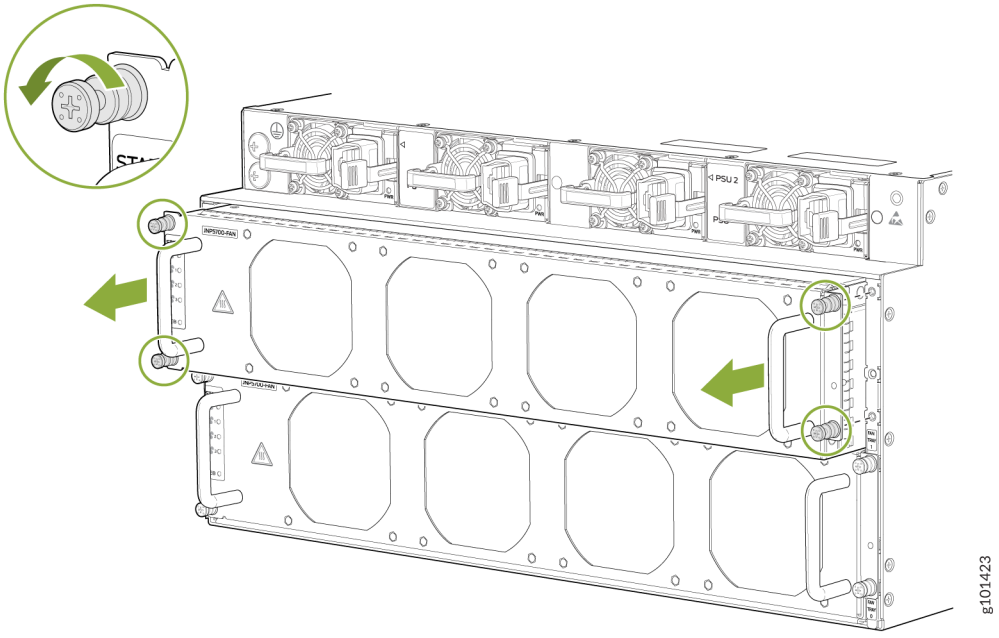

4. Place the fan tray with the handles in the antistatic bag or on the antistatic mat placed on a flat, stable surface.

CAUTION: Replace a fan tray within three minutes to avoid chassis overheating.

Install a Fan Tray in the ACX7509 Router

Before you begin to install a fan tray:

- Ensure that you understand how to prevent ESD damage.
- Ensure that you have the following parts and tools available to install a fan tray in an ACX7509 router:
  - Electrostatic discharge (ESD) grounding strap
  - A Phillips (+) screwdriver, number 1 or 2 (optional), for the captive screws
  - A replacement fan tray

CAUTION: You can remove and replace the JNP5700-FAN fan tray while the router is operating. However, you must replace the fan tray within three minutes of removing the fan tray, to prevent overheating of the chassis. If you are removing a JNP5700-FAN to access an ACX7509-FEB Forwarding Engine Board (FEB), we recommend that you either perform the necessary work during a maintenance window or replace the fan tray within three minutes of removal.

To install an ACX7509 fan tray:

1. Wrap and fasten one end of the ESD grounding strap around your bare wrist, and connect the other end of the strap to one of the ESD points on the chassis.
2. Grasp both the handles of the fan tray, and align the bottom of the fan tray with the bottom of the fan tray slot.
3. Rest the bottom edge of the fan tray in the slot and slide the fan tray into place so it is fully seated.

4. Tighten the captive screws until they are finger tight. See Figure 46 on page 134.

Figure 46: Installing a Fan Tray JNP5700-FAN in the ACX7509 Router

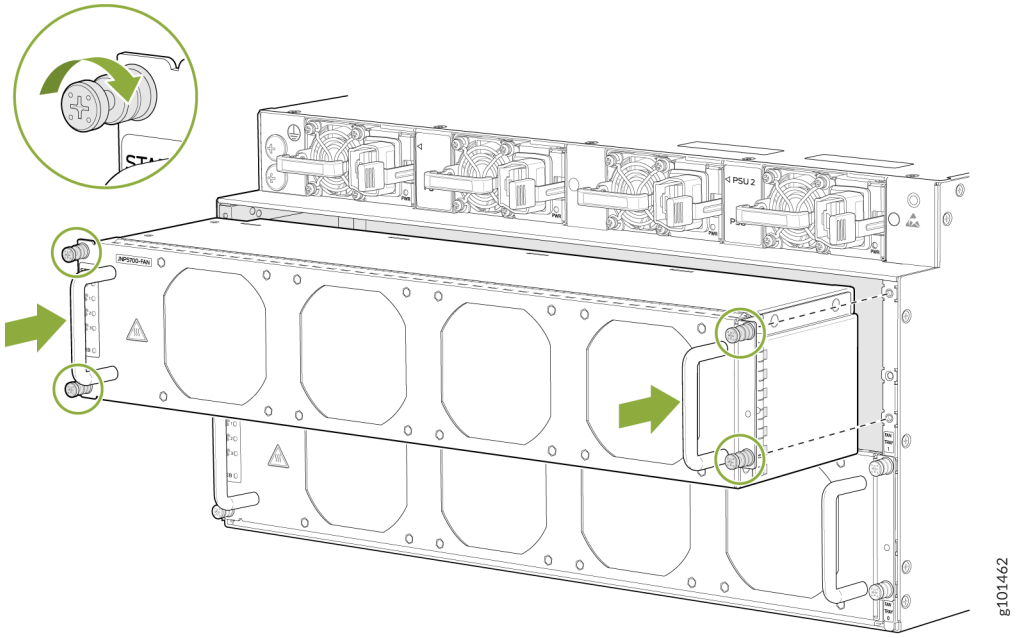

ACX7509 Power Supply Maintenance

SUMMARY

Maintaining an ACX7509 router includes replacing power supplies. Replacing includes removing a failed power supply and installing a functional power supply.

IN THIS SECTION

- AC/HVDC Power Supply Replacement in an ACX7509 Router | **135**
- DC Power Supply Replacement in an ACX7509 Router | **138**

The ACX7509 router is powered by 3000 W redundant hot-removable and hot-insertable pre-installed AC/HVDC or DC power supplies. ACX7509-BASE configuration router is powered by two power supplies for 1 + 1 redundancy and ACX7509-PREMIUM configuration is powered by four power supplies for 2+2 redundancy. If any power supply unit fails, you can replace it without powering off or

disrupting the routing function, the other power supply units will balance the electrical load without interruption.

CAUTION: Do not mix AC/HVDC and DC power supplies in the same chassis.

AC/HVDC Power Supply Replacement in an ACX7509 Router

IN THIS SECTION

- Remove an AC/HVDC Power Supply from the ACX7509 Router | **136**
- Install an AC/HVDC Power Supply in the ACX7509 Router | **137**

WARNING: Turn off the power source before disconnecting the power cord to prevent damage to the power connector contact.

WARNING: If you need to replace all the power supplies installed in your ACX7509 router, you must power off the ACX7509 router before removing the power supplies.

CAUTION: Replace the power supply within one minute of removal, to prevent chassis overheating. Before removing the power supply, ensure that you have a replacement power supply available.

CAUTION: The AC/HVDC power supply you are installing must use the same airflow direction as the fan trays installed in the router. Labels on the power supply handle indicate the direction of airflow. See "Cooling System and Airflow in ACX7509 Routers" on page 19.

CAUTION: Before you replace a power supply in an ACX7509 router, ensure that you have taken the necessary precautions to prevent electrostatic discharge (ESD) damage (see "Prevention of Electrostatic Discharge Damage" on page 206).

Ensure that you have the following parts and tools available to replace a power supply:

- ESD grounding strap (provided)
- Antistatic bag or an antistatic mat (not provided)
- (For a DC power supply) Phillips (+) screwdriver, number 2 (not provided)

Remove an AC/HVDC Power Supply from the ACX7509 Router

To remove an AC/HVDC power supply:

1. Place the antistatic bag or the antistatic mat on a flat, stable surface.
2. Wrap and fasten one end of the ESD wrist strap around your bare wrist, and connect the other end of the strap to the ESD point on the device.
3. Disconnect power to the ACX7509 power supply that you are going to replace. If the AC input power source outlet has a power switch, set it to the off (**O**) position. If the AC input power source outlet does not have a power switch, gently pull out the plug end of the power cord connected to the power source outlet.
4. Remove the power cord from the power supply by pressing in the locking button on the side of the power connector and gently pulling the connector out of the power supply faceplate. See Figure 47 on page 136.

Figure 47: Removing the Power Cord from the Power Supply

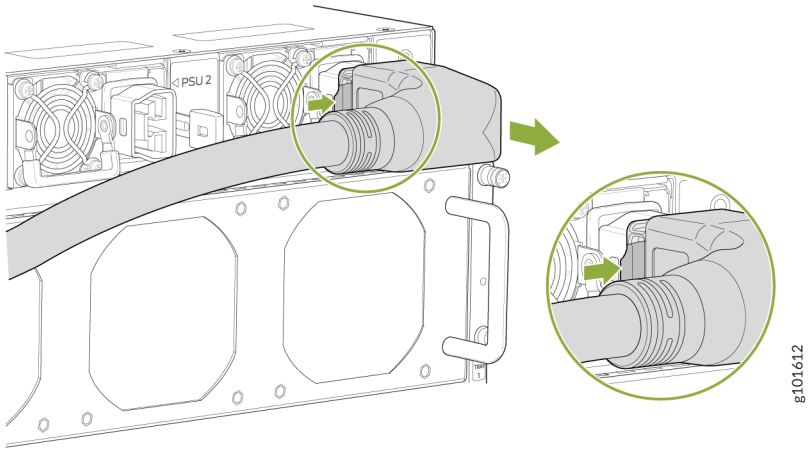

5. Slide the ejector lever on the power supply toward the orange handle until it stops.
6. Place one hand under the power supply to support it, and slide it completely out of the chassis. Take care not to touch power supply components, pins, leads, or solder connections. See Figure 48 on page 137.

Figure 48: Removing an AC/HDVC Power Supply from the ACX7509 Router

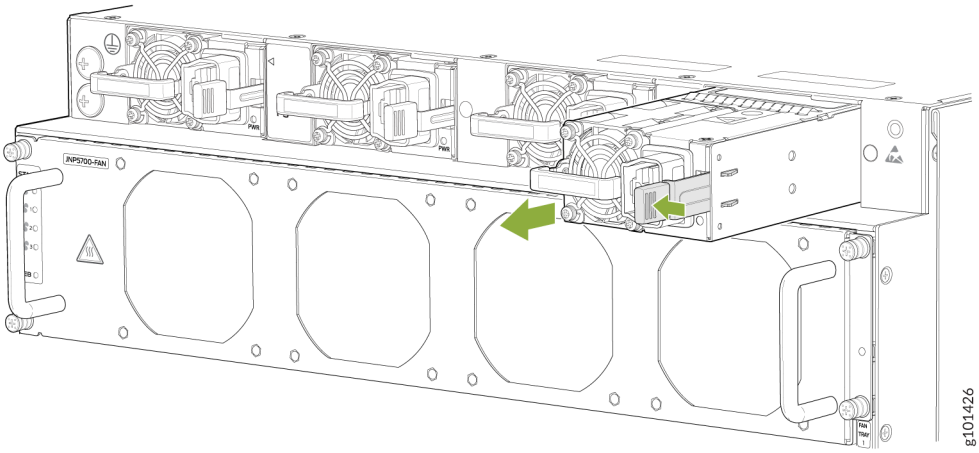

7. Place the power supply in the antistatic bag or on the antistatic mat placed on a flat, stable surface.
8. Install a new power supply within one minute of removing the old one.

Install an AC/HVDC Power Supply in the ACX7509 Router

> ⚠ **CAUTION**: Install the replacement power supply within one minute of removal to prevent the chassis from overheating. Before removing the power supply, ensure that you have a replacement power supply available.

To install an AC/HVDC power supply:

1. Wrap and fasten one end of the ESD wrist strap around your bare wrist, and connect the other end of the strap to the ESD point on the device.
2. If the power supply has protective plastic wrap, peel and remove the plastic wrap from all four sides of the power supply.
3. Taking care not to touch power supply components, pins, leads, or solder connections, remove the power supply from its bag.

4. Using both hands, place the power supply in the power supply slot on the field replaceable unit (FRU) panel of the ACX7509 router, and slide it in until it is fully seated and the ejector lever slides into place. See Figure 49 on page 138.

Figure 49: Installing an ACX7509 AC/HVDC Power Supply

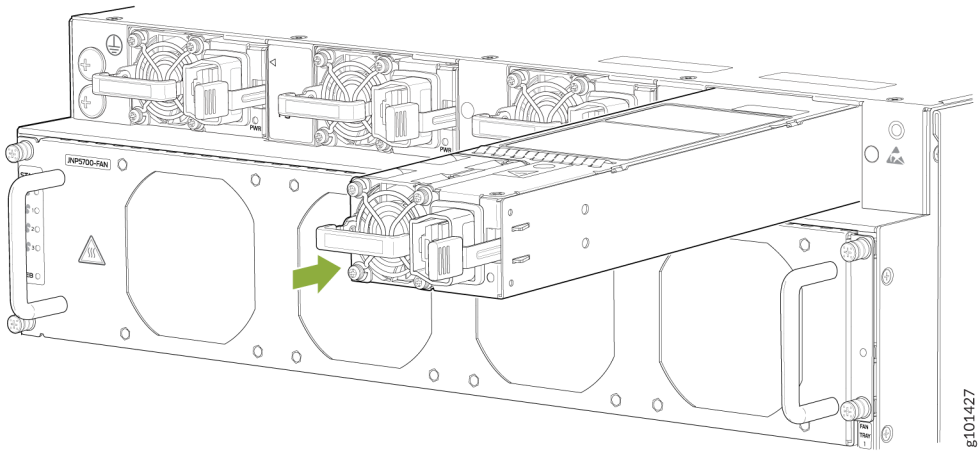

NOTE: Each power supply must be connected to a dedicated power source outlet.

NOTE: If you have a Juniper Care service contract, register any addition, change, or upgrade of hardware components at https://www.juniper.net/customers/support/tools/updateinstallbase/ . Failure to do so can result in significant delays if you need replacement parts. This note does not apply if you replace existing components with the same type of component.

DC Power Supply Replacement in an ACX7509 Router

IN THIS SECTION

- Remove a DC Power Supply from the ACX7509 Router | **139**
- Install a DC Power Supply in the ACX7509 Router | **140**

WARNING: Turn off the circuit breaker for the DC power source before disconnecting the power cord from the power supply. Unplugging a DC connection while the power supply is powered up may damage the electrical connectors.

WARNING: If you need to replace all the power supplies installed in your ACX7509 router, you must power off the ACX7509 router before removing the power supplies.

CAUTION: Replace the power supply within one minute of removal, to prevent chassis overheating. Before removing the power supply, ensure that you have a replacement power supply available.

CAUTION: The DC power supply that you are installing must use the same airflow direction as the fan trays installed in the router. Labels on the power supply handle indicate the direction of airflow. See "Cooling System and Airflow in ACX7509 Routers" on page 19.

CAUTION: Before you replace a power supply in an ACX7509 router, ensure that you have taken the necessary precautions to prevent electrostatic discharge (ESD) damage (see "Prevention of Electrostatic Discharge Damage" on page 206).

Remove a DC Power Supply from the ACX7509 Router

To remove a DC power supply:

1. Place the antistatic bag or the antistatic mat on a flat, stable surface.
2. Wrap and fasten one end of the ESD wrist strap around your bare wrist, and connect the other end of the strap to the ESD point on the device.
3. Turn off the circuit breaker for the power feed to the power supply that you are replacing. Be sure the LEDs turn off on the power supply that you are removing.
4. Loosen the thumb screws for the power cable. Gently pull out the socket end of the power plug connected to the power supply faceplate.
5. Disconnect a connector for the power cables, or release each of three cables from the power supply (requires a standard screw driver).
6. Grasp the power supply handle while pressing the release latch towards the power supply handle.

7. Place one hand under the power supply to support it, and slide it completely out of the chassis. Take care not to touch power supply components, pins, leads, or solder connections. See Figure 50 on page 140.

Figure 50: Removing a DC Power Supply from the ACX7509 Router

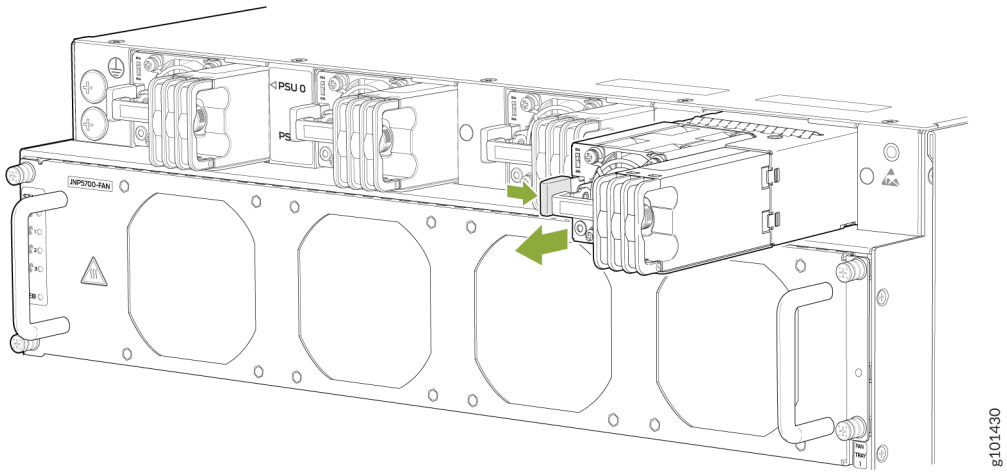

8. Place the power supply in the antistatic bag or on the antistatic mat placed on a flat, stable surface.
9. Install a new power supply within one minute of removing the old one.

Install a DC Power Supply in the ACX7509 Router

> **CAUTION**: Install the replacement power supply within one minute of removal, to prevent chassis overheating. Before removing the power supply, ensure that you have a replacement power supply available.

To install a DC power supply:

1. Wrap and fasten one end of the ESD wrist strap around your bare wrist, and connect the other end of the strap to the ESD point on the device.
2. If the power supply has protective plastic wrap, peel and remove the plastic wrap from all four sides of the power supply.
3. Taking care not to touch power supply components, pins, leads, or solder connections, remove the power supply from its bag.
4. To prevent equipment damage caused by electrostatic discharge, attach an ESD grounding strap to your bare wrist, and connect the strap to one of the ESD points on the chassis.
5. Taking care not to touch power supply components, pins, leads, or solder connections, remove the power supply from its bag.

6. Using both hands, place the power supply in the power supply slot on the field replaceable unit (FRU) panel of the ACX7509 router, and slide it in until it is fully seated and the locking lever slides into place. See Figure 51 on page 141.

Figure 51: Installing a DC Power Supply in the ACX7509 Router

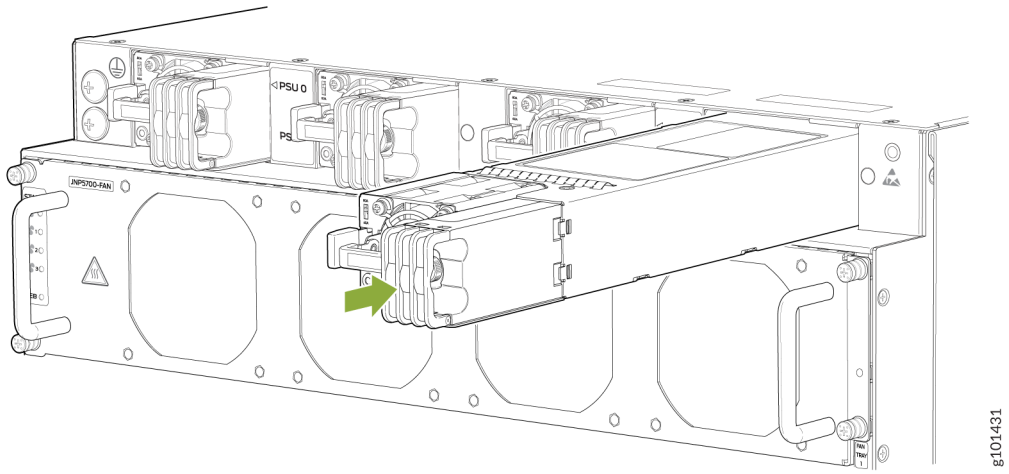

NOTE: Each power supply must be connected to a dedicated power source outlet.

NOTE: If you have a Juniper Care service contract, register any addition, change, or upgrade of hardware components at https://www.juniper.net/customers/support/tools/updateinstallbase/ . Failure to do so can result in significant delays if you need replacement parts. This note does not apply if you replace existing components with the same type of component.

ACX7509 Routing and Control Board Maintenance

SUMMARY

Maintaining an ACX7509 router includes removing and installing the Routing and Control board.

IN THIS SECTION

- Remove the Routing and Control Board from the ACX7509 Router | **142**
- Install the Routing and Control Board in the ACX7509 Router | **144**

The ACX7509 router is shipped with one or two Routing and Control Boards (RCBs) preinstalled in the chassis, depending on the configuration. You can install RCBs in the two top slots on the front of the chassis.

When you power on a router with a single RCB preinstalled in it, the RCB comes online as the primary RCB. The primary RCB powers on the Forwarding Engine Boards (FEBs) and the Flexible PIC Concentrator (FPC). If you install the second RCB, it powers up and the Routine Engine comes online in the backup mode.

When you power on a router for the first time with two RCBs installed, the RCB installed in slot 0 comes online as the primary RCB and powers on the FEBs and the FPCs. The RCB installed in slot 1 comes online as the backup RCB by default. You can change this configuration by using the CLI.

To remove or install an RCB, read the following sections.

- "Remove the Routing and Control Board from the ACX7509 Router" on page 142
- "Install the Routing and Control Board in the ACX7509 Router" on page 144

Remove the Routing and Control Board from the ACX7509 Router

In redundant configurations, the Routing and Control Board (RCB) in an ACX7509 router is a hot-removable and hot-insertable field-replaceable unit (FRU). In base configurations, you need to install a second RCB before removing a failing RCB, to prevent the router from shutting down. We recommend that you take base system offline before replacing the RCB.

Before you remove an RCB, ensure that you have an electrostatic discharge (ESD) grounding strap.

CAUTION: In base configurations, removal of the RCB causes the system to shut down. In redundant configurations, removal of the RCB causes the system to reboot and start the election process for a new primary RCB.

To remove an RCB:

1. Take the RCB offline.
2. Place an antistatic bag or antistatic mat on a flat, stable surface.
3. Wrap and fasten one end of the ESD grounding strap around your bare wrist, and connect the other end of the strap to one of the ESD points on the chassis.
4. Grasp both ejector handles, spread them apart, and slide the RCB about halfway out of the chassis (see Figure 52 on page 143).

Figure 52: Removing an RCB from the ACX7509 Router

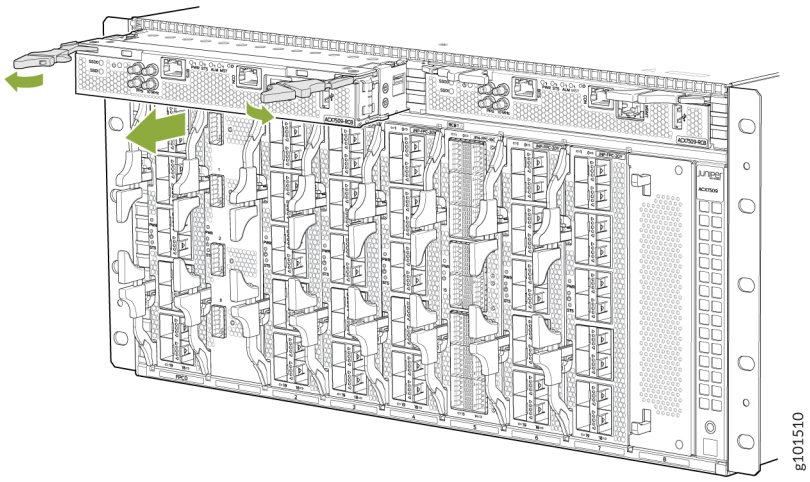

5. Grasp the ejector handle with one hand, and place your other hand under the RCB for support as you slide it completely out of the chassis.
6. Place the RCB on the antistatic mat.
7. If you are not replacing the RCB immediately, install a cover in the empty slot.

Install the Routing and Control Board in the ACX7509 Router

In redundant configurations, the Routing and Control Board (RCB) in an ACX7509 router is a hot-removable and hot-insertable field-replaceable unit (FRU). In base configurations, you need to install a second RCB before removing a failing RCB, to prevent the router from shutting down.

Before you install an RCB, ensure that you have an electrostatic discharge (ESD) grounding strap.

To install an RCB:

1. Wrap and fasten one end of the ESD grounding strap around your bare wrist, and connect the other end of the strap to one of the ESD points on the chassis.
2. If an RCB blank (JNP5K-RCB-BLNK) is installed, press the handles on the blank and gently pull out the blank from the slot (see Figure 53 on page 144) or in redundant configurations remove the failing RCB (see "Remove the Routing and Control Board from the ACX7509 Router" on page 142).

Figure 53: Removing the RCB Blank

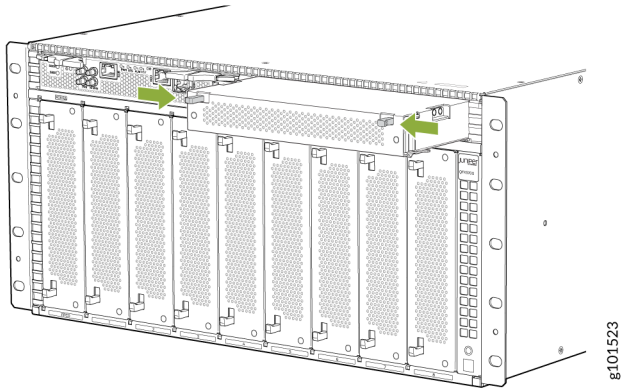

3. Remove the new RCB from the antistatic bag, and inspect it for any damage before installing it in the chassis.
4. Lift the RCB by its sides, being careful not to bump the connectors.
5. Carefully align the sides of the RCB with the guides inside the chassis.
6. Slide the RCB into the chassis, carefully ensuring that it is correctly aligned.

7. Grasp the two ejector handles, and fold them inward until they latch to seat the RCB (see Figure 54 on page 145).

Figure 54: Installing an RCB

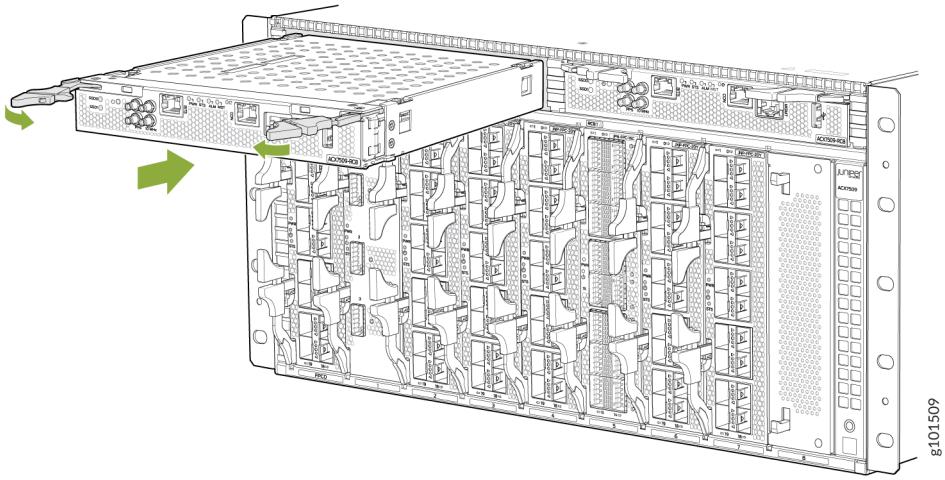

The RCB begins the power-on sequence when fully seated.

8. To verify that the RCB is functioning normally, check the **PWR** LED and the **STS** LED on its faceplate. Both LEDs should light steadily, shortly after the RCB is installed. If the **PWR** LED is blinking red, the available power might be insufficient.

   Another method of verifying that the RCB is online is to use the following CLI command:

```
user@host> show chassis environment cb
```

ACX7509 Forwarding Engine Board Maintenance

SUMMARY

Maintaining an ACX7509 router includes removing and installing the Forwarding Enginer Board (FEB).

IN THIS SECTION

- Remove the Forwarding Engine Board from the ACX7509 Router | **147**

Install the Forwarding Engine Board in the ACX7509 Router | 149

The ACX7509 router is shipped with one or two Forwarding Engine Boards (FEBs) preinstalled horizontally, mid-chassis, between the Flexible PIC Concentrators (FPCs) and the Routing and Control Boards (RCBs) in the front and the fan trays in the rear.

You must remove and install the appropriate fan tray to install and remove FEBs. See "ACX7509 Fan Tray Maintenance" on page 131 to install and remove a fan tray.

In redundant configurations, an ACX7509 FEB is a hot-removable and hot-insertable field-replaceable unit (FRU). In base configurations, you need to install a second FEB before removing a failing FEB.

NOTE: Replace a failed FEB with a blank panel or new FEB within 60 minutes of removal.

Ensure you have the following equipment on hand before replacing a FEB:

- Antistatic bag or antistatic mat
- Electrostatic discharge (ESD) grounding strap to wrap around your bare wrist.

Figure 55: ESD Point on Rear of the ACX7509 Router

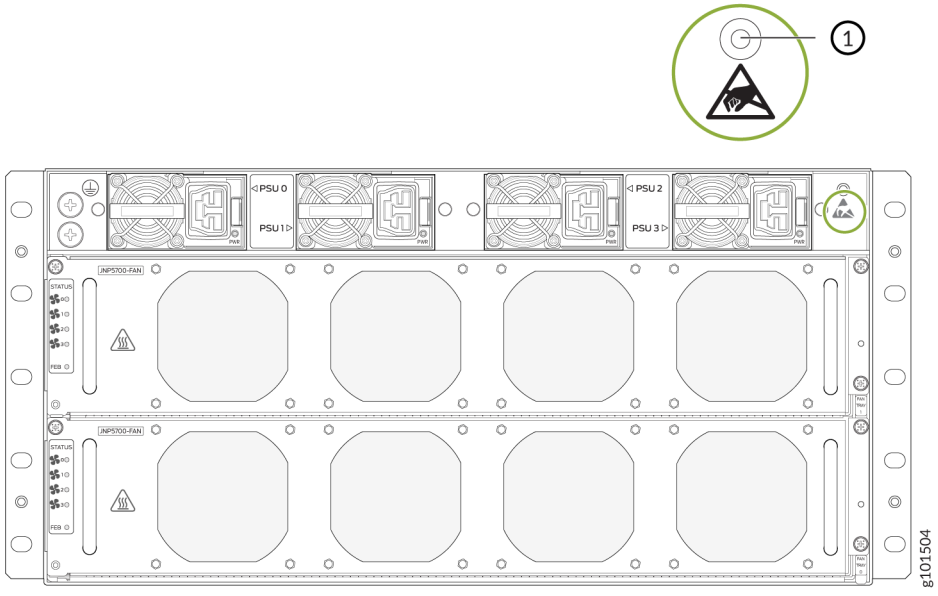

1– ESD point	

- Replacement FEB or a cover for the empty slot

Remove the Forwarding Engine Board from the ACX7509 Router

To remove a FEB from an ACX7509 router chassis:

1. Take the FEB offline using the `request chassis feb slot` *`slot number`* `offline` command.

   NOTE: If you suspect that the FEB is faulty and want to ensure that packets do not flow through the FEB, power off the FEB instead of taking the FEB offline. To power down the FEB, use the `set chassis feb power-off slot` *`slot number`* command. Before you bring a new FEB in that slot online, you must delete the old configuration using the `delete chassis feb power-off slot` *`slot number`* command.

2. Place an antistatic bag or an antistatic mat on a flat, stable surface.
3. Wrap and fasten one end of the ESD grounding strap around your bare wrist, and connect the other end of the strap to an ESD point on the chassis. An ESD point is located on the rear of the ACX7509 router (see Figure 55 on page 146).
4. Remove the appropriate fan tray (see Figure 45 on page 132).

5. Using your fingers, loosen the captive screws of the FEB. See Figure 56 on page 148.

Figure 56: Loosen the Captive Screws

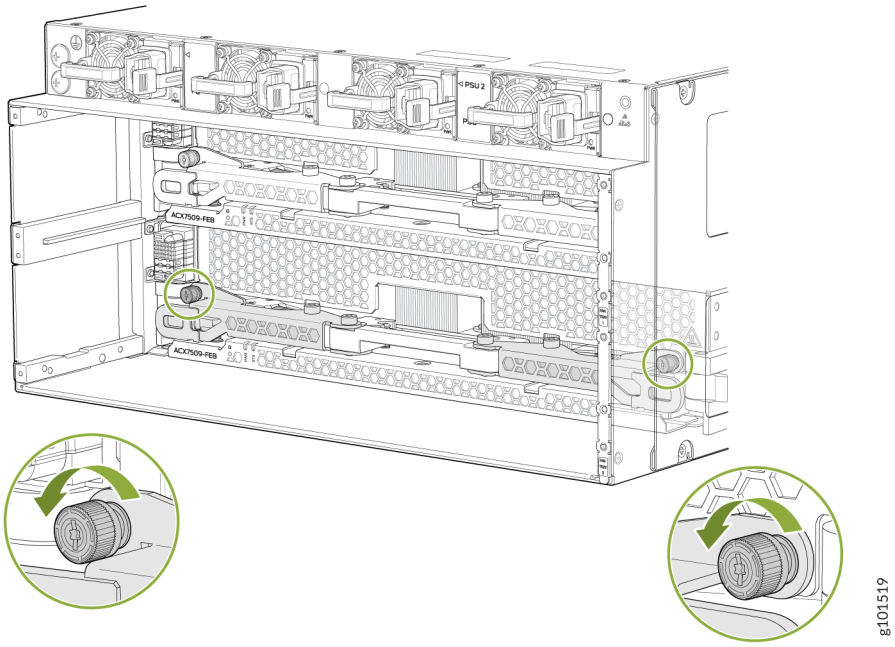

6. Unlatch the ejector handles, and spread them apart. The FEB slides about a quarter of the way out of the slot. See Figure 57 on page 148.

Figure 57: Spreading the Ejector Handles and Removing the FEB from the ACX7509 Chassis

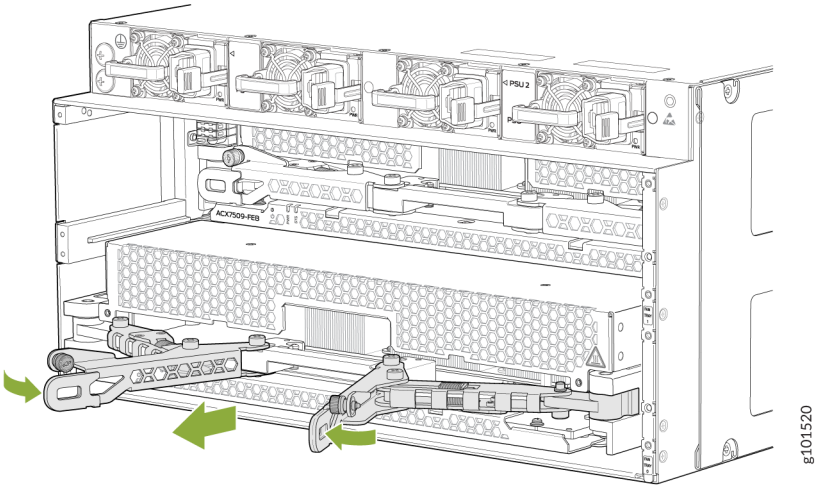

7. Grasp the ejector handle with one hand, and place your other hand under the FEB for support as you slide the FEB out of the slot.
8. Place the FEB on the antistatic mat with the printed circuit board (PCB) facing upward. Be careful not to bump or handle the FEB by the connectors. If you do not have an antistatic mat, have another person help you slide the antistatic bag over the FEB before placing it on a stable surface.

> **CAUTION**: Do not stack hardware components on top of one another after you remove them. Place each component on an antistatic mat resting on a stable, flat surface.

Install the Forwarding Engine Board in the ACX7509 Router

To install a FEB:

1. Place an antistatic bag or an antistatic mat on a flat, stable surface.
2. Wrap and fasten one end of the ESD grounding strap around your bare wrist, and connect the other end of the strap to an ESD point on the chassis. An ESD point is located on the rear of ACX7509 router (see Figure 55 on page 146).
3. Remove the appropriate fan tray (see Figure 45 on page 132).

4. Either remove the failing FEB (see "Remove the Forwarding Engine Board from the ACX7509 Router" on page 147) or, if an FEB blank is installed, pull the quarter-turn knobs on the blank, press them, and gently pull the blank out of the slot (see Figure 58 on page 150).

Figure 58: Removing a FEB Blank

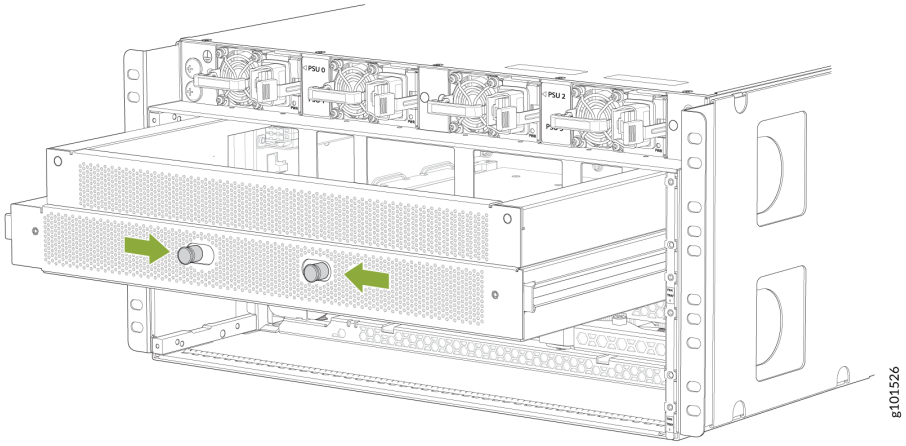

5. Lift the FEB by the handle with one hand, and support the lower edge with the other hand.
6. Gently slide the FEB into the open slot until the ejector handles engage and start to close.
7. Grasp the two ejector handles, and fold them inward until they latch to seat the FEB (see Figure 59 on page 150).

Figure 59: Installing an ACX7509 FEB

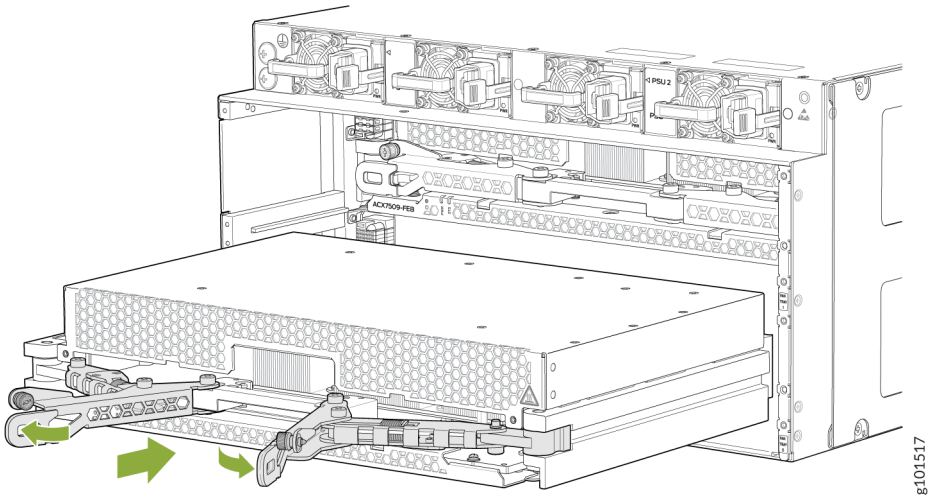

8. Hand-tighten the captive screws.

> **NOTE**: After you install FEB0, install Fan Tray 0 and after you install FEB1, install Fan Tray 1. Both the fan trays must be attached back to the chassis after installation to ensure uninterrupted services.

9. Bring the FEB online using the `request chassis feb slot slot number online` command.

   You can check the status of the FEB using the `show chassis fabric febs` and the `show chassis fabric plane-location` commands.

> **NOTE**: If you completely powered off the FEB using the `set chassis feb power-off slot slot` command, you must delete the configuration in order to bring the FEB online. To delete the configuration and bring a replacement FEB online, use the `delete chassis feb power-off slot slot number` command.

ACX7509 Flexible PIC Concentrator Maintenance

SUMMARY

Maintaining ACX7509 routers includes removing and reinstalling Flexible PIC Concentrators (FPCs).

IN THIS SECTION

- Remove a Flexible PIC Concentrator from the ACX7509 Router | **152**
- Install a Flexible PIC Concentrator in the ACX7509 Router | **154**

Flexible PIC Concentrators (FPCs) on the ACX7509 router are field-replaceable units (FRUs) that can be installed in FPC slots on the front of the chassis. The FPCs are hot-insertable and hot-removable: you can remove and replace them without powering off the router or disrupting router functions.

If you have the optional cable management system, it is not necessary to remove the cable management system before replacing an FPC.

The ACX7509 chassis supports JNP-FPC-16C, JNP-FPC-4CD, and JNP-FPC-20Y types of FPCs. The replacement procedure is the same for all three FPCs.

Before you replace an FPC from the router chassis:

- Ensure that you have taken the necessary precautions to prevent electrostatic discharge (ESD) damage.
- If there are any optical cables (including transceivers) installed in the FPC, remove them before you replace the FPC.

Ensure that you have the following equipment available before replacing a Forwarding Engine Board (FEB):

- Antistatic bag or antistatic mat
- ESD grounding strap to wrap around your bare wrist and connect to an ESD point on the chassis

Figure 60: ESD Point on Front of the ACX7509 Router

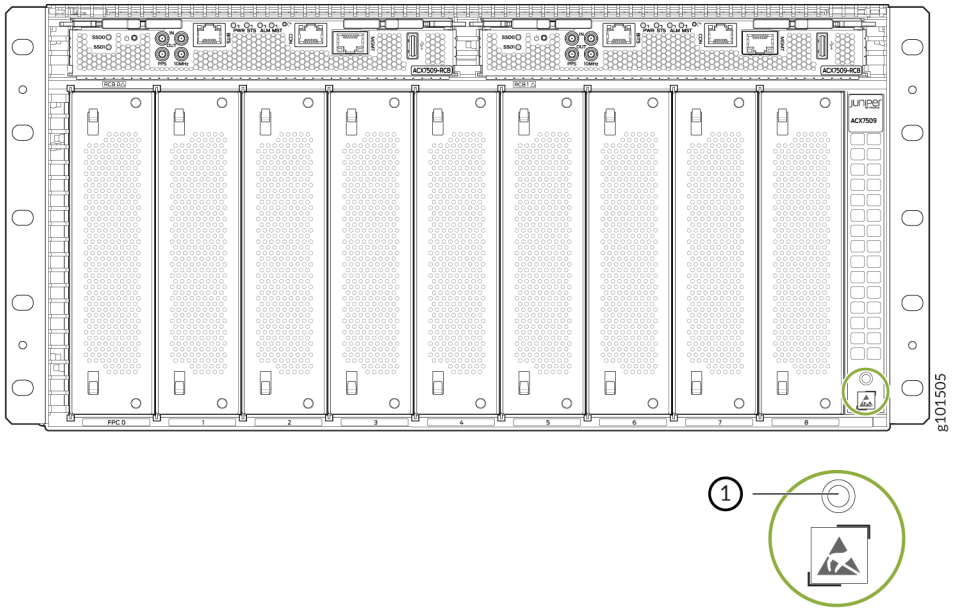

1– ESD point	

- Replacement FPC or a cover for the empty slot

Remove a Flexible PIC Concentrator from the ACX7509 Router

To remove an FPC from a ACX7509 router chassis:

1. Place an antistatic bag or an antistatic mat on a flat, stable surface.

2. Wrap and fasten one end of the ESD grounding strap around your bare wrist, and connect the other end of the strap to an ESD point on the chassis. An ESD point is located on the front of ACX7509 router (see Figure 60 on page 152).
3. Label the cables connected to each port on the FPC so that you can reconnect the cables to the correct ports.
4. Take the FPC offline by using the request-chassis-fpc slot *slot-number* offline command. Verify the status information by using the show chassis fpc command.
5. Unlatch the ejector handles, and spread them apart. The FPC slides about a quarter of the way out of the slot. See Figure 61 on page 153

Figure 61: Removing an ACX7509 FPC

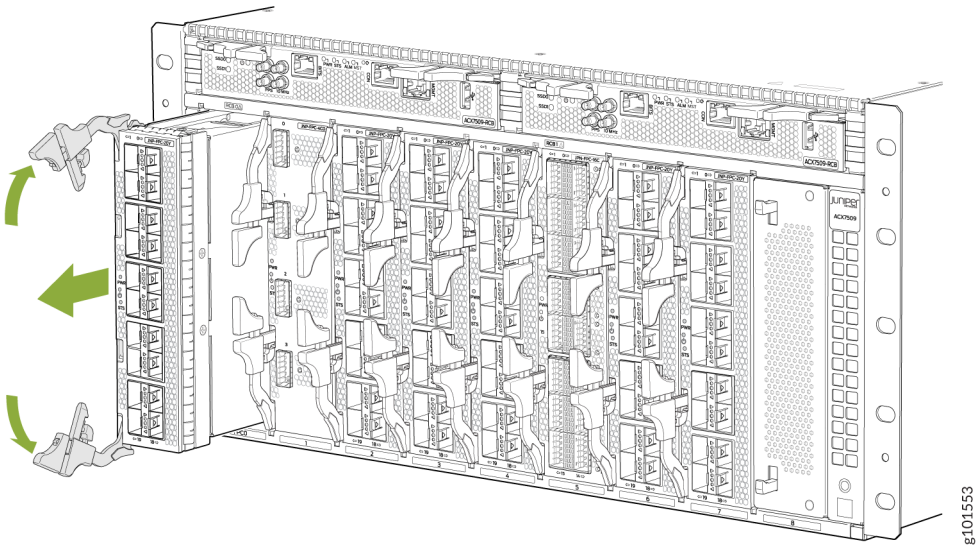

6. Grasp the ejector handle with one hand and place your other hand under the FPC for support as you slide the FPC out of the slot.
7. Place the FPC on the antistatic mat. Be careful not to bump or handle the FPC by the connectors. If you do not have an antistatic mat, have another person help you slide the antistatic bag over the FPC before placing it on a stable surface.

CAUTION: Do not stack hardware components on top of one another after you remove them. Place each component on an antistatic mat resting on a stable, flat surface.

Install a Flexible PIC Concentrator in the ACX7509 Router

To install an FPC in the ACX7509 router chassis:

1. Place an antistatic bag or an antistatic mat on a flat, stable surface.
2. Wrap and fasten one end of the ESD grounding strap around your bare wrist, and connect the other end of the strap to an ESD point on the chassis. An ESD point is located on the front of the ACX7509 router (see Figure 60 on page 152).
3. Either remove the failing FPC (see "Remove a Flexible PIC Concentrator from the ACX7509 Router" on page 152) or, if an FPC blank (JNP5K-FPC-BLNK) is installed, press the handles on the blank and gently pull the blank out of the slot (see Figure 62 on page 154).

Figure 62: Removing the FPC Blank

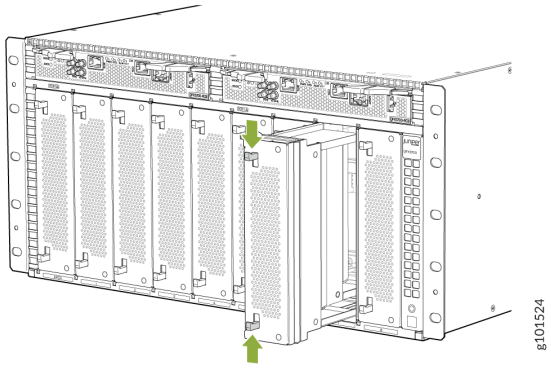

> **CAUTION**: Do not lift the FPC by holding the edge connectors or the handles on the faceplate. Neither the handles nor the edge connectors can support the weight of the FPC. Lifting the FPC by the handles or edge connectors might bend the connectors, which would prevent the FPCs from being properly seated in the chassis.

4. Remove the FPC from the antistatic bag, and inspect it for any damage before installing it in the chassis.
5. Lift the FPC by the handle with one hand, and support the lower edge with the other hand.
6. Gently slide the FPC into the open slot until the ejector handles engage and start to close.

7. Grasp the two ejector handles, and fold them inward until they latch to seat the FPC (seeFigure 63 on page 155).

Figure 63: Installing an ACX7509 FPC

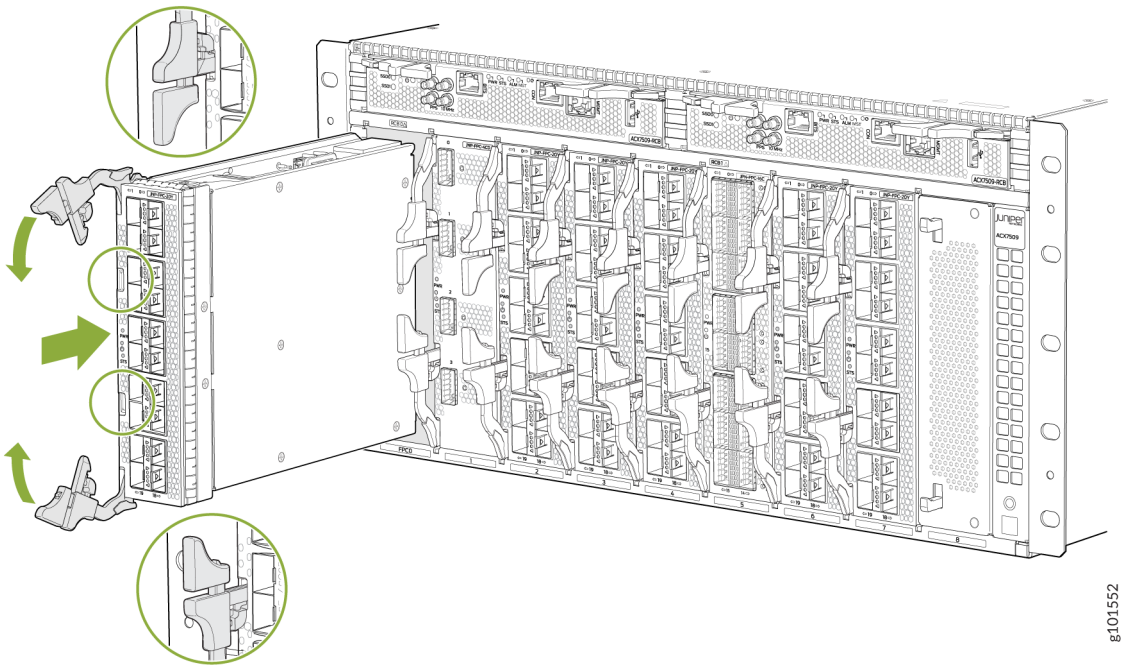

8. Ensure that the ejectors are firmly locked in position (see Figure 64 on page 156).

Figure 64: How to lock the ejectors

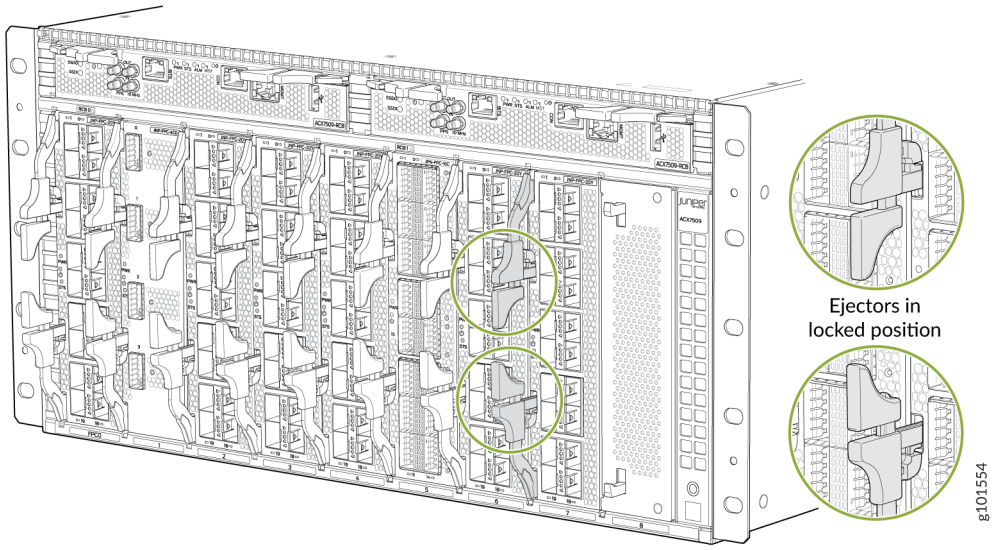

9. Bring the FPC online by using the request-chassis-fpc slot *slot-number* online command. Verify the status information by using the show chassis fpc command.

ACX7509 Cable Management System Maintenance

SUMMARY

Maintaining an ACX7509 router includes installing and removing the cable management system properly.

IN THIS SECTION

- Install the ACX7509 Cable Management System | **157**
- Remove the ACX7509 Cable Management System | **163**

The ACX7509 cable management system organizes and protects optical cabling attached to the Routing and Control Boards (RCBs) and Flexible PIC Concentrator (FPC).

The cable management system consists of the following components:

- Left and right side covers
- Fiber management tray
- Cable manager door
- Air filter door

Install the ACX7509 Cable Management System

Ensure that you have the following parts and tools available to install the ACX7509 cable management system:

- Phillips (+) screwdriver, number 2
- Eight mounting screws (provided)
- Electrostatic discharge (ESD) grounding strap to wrap around your bare wrist and connect to an ESD point on the chassis

To install the cable management system:

1. Wrap and fasten one end of the ESD wrist strap around your bare wrist, and connect the other end of the strap to the ESD point on the device.
2. Position the fiber management tray below the ACX7509 chassis, and align its mounting brackets holes with the holes of the rack rails.

3. Install mounting screws into each of the mounting bracket holes aligned with the rack, starting from the bottom, and tighten the screws. See Figure 65 on page 158.

Figure 65: Installing Fiber Management Tray

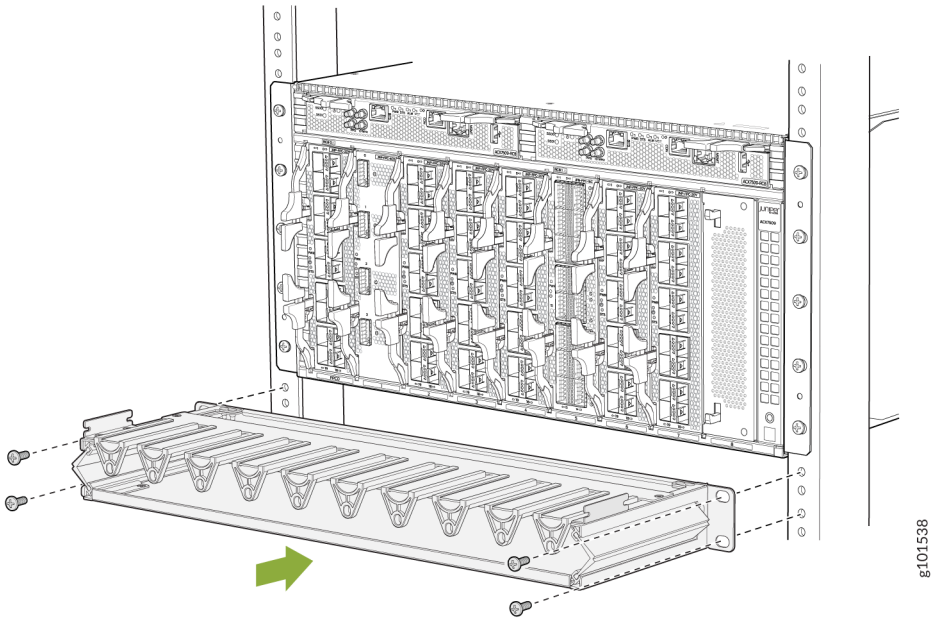

4. Remove the top and bottom chassis mounting screws.
5. Rest the left and right side covers on the fiber management tray.
6. Slide the side covers until the side cover brackets contact the front mounting brackets of the ACX7509 chassis and the shoulder pins on the side covers are guided into the brackets on the fiber management tray.

7. Install back the top and bottom chassis mounting screws and tighten the screws. See Figure 66 on page 159.

Figure 66: Installing the Left and Right Side Covers

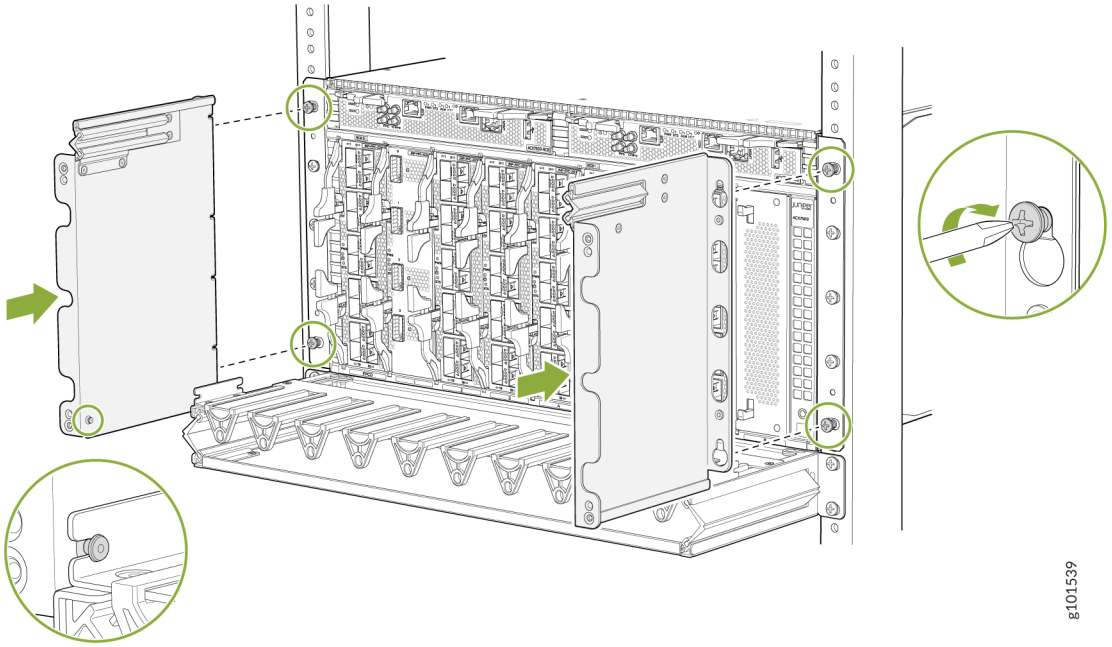

8. Arrange the FPC cables in the fiber management tray and the cables from the RCBs in the left and right side covers. See Figure 67 on page 160.

Figure 67: Cables Arranged in the Fiber Management Tray and Left and Right Side Covers

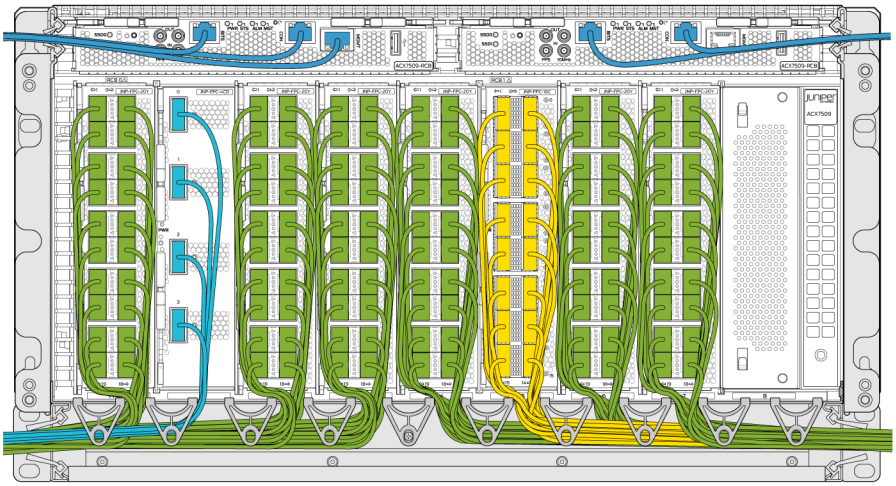

9. Slide the top cover of the cable manager door into the left and right side covers, and tighten the four captive screws. See Figure 68 on page 161.

Figure 68: Installing the Cable Manager Door

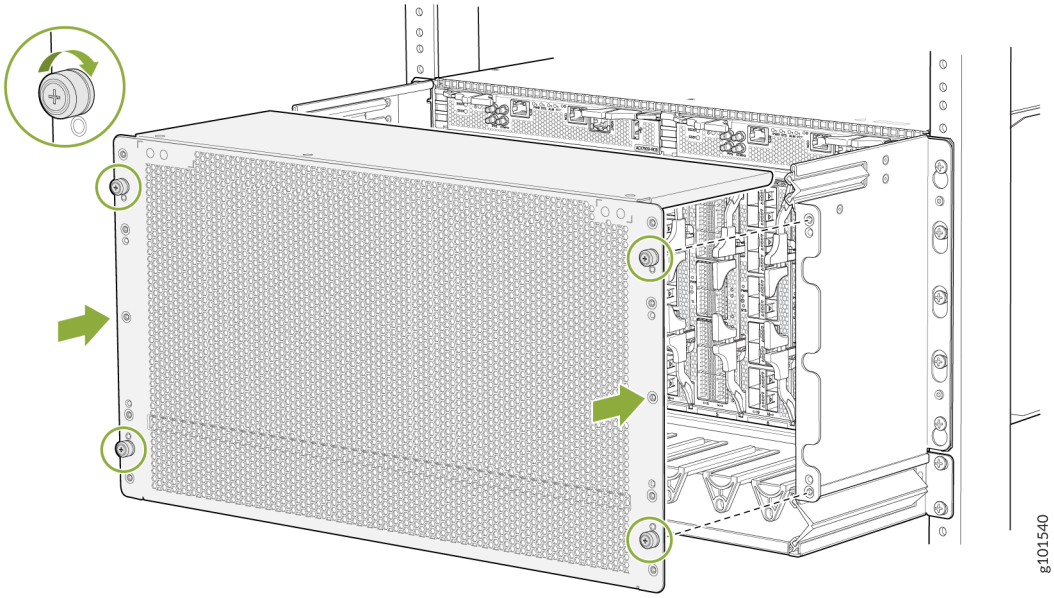

10. Mount the air filter door onto the cable manager door, and tighten the four captive screws. See Figure 69 on page 162.

Figure 69: Installing the Air Filter Door

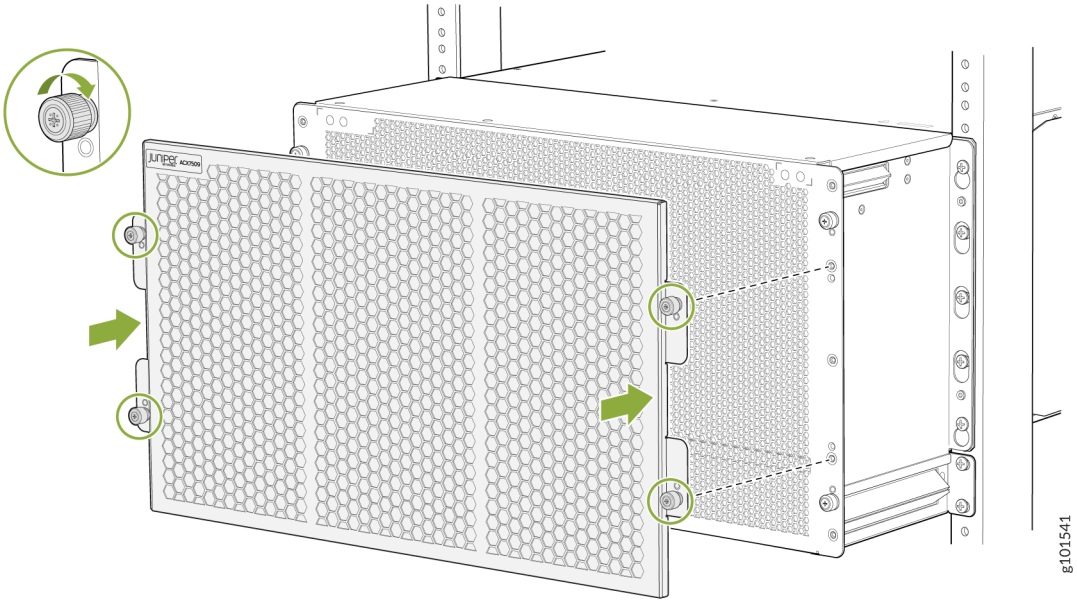

Cable Management System Installed on ACX7509 router.

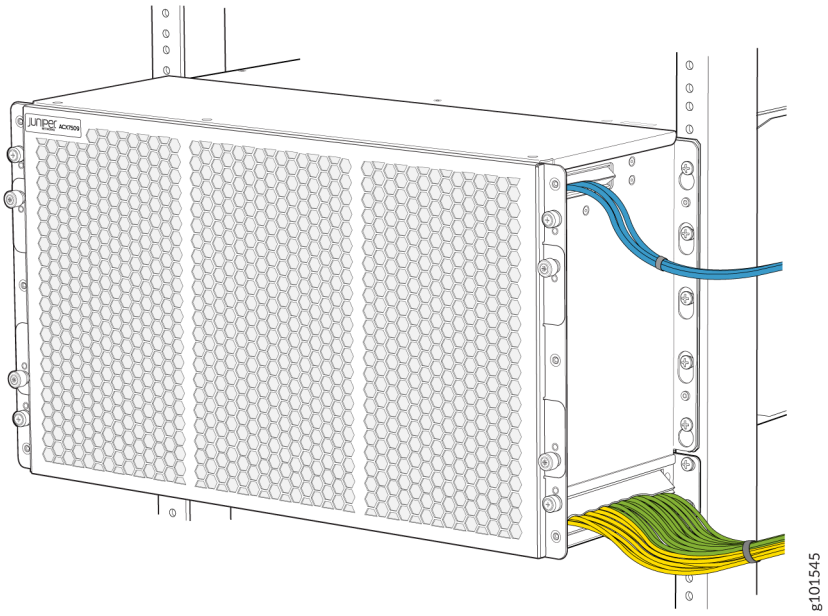

Remove the ACX7509 Cable Management System

Ensure that you have the following parts and tools available to remove the ACX7509 cable management system:

- Phillips (+) screwdriver, number 2
- Antistatic bag or an antistatic mat
- Electrostatic discharge (ESD) grounding strap to wrap around your bare wrist and connect to an ESD point on the chassis

To remove the cable management system:

1. Wrap and fasten one end of the ESD wrist strap around your bare wrist, and connect the other end of the strap to the ESD point on the device.

2. Loosen the four top and bottom captive screws, and pull the cable manager door out of the right and left side covers. See Figure 70 on page 164.

Figure 70: Removing the Cable Manager Door

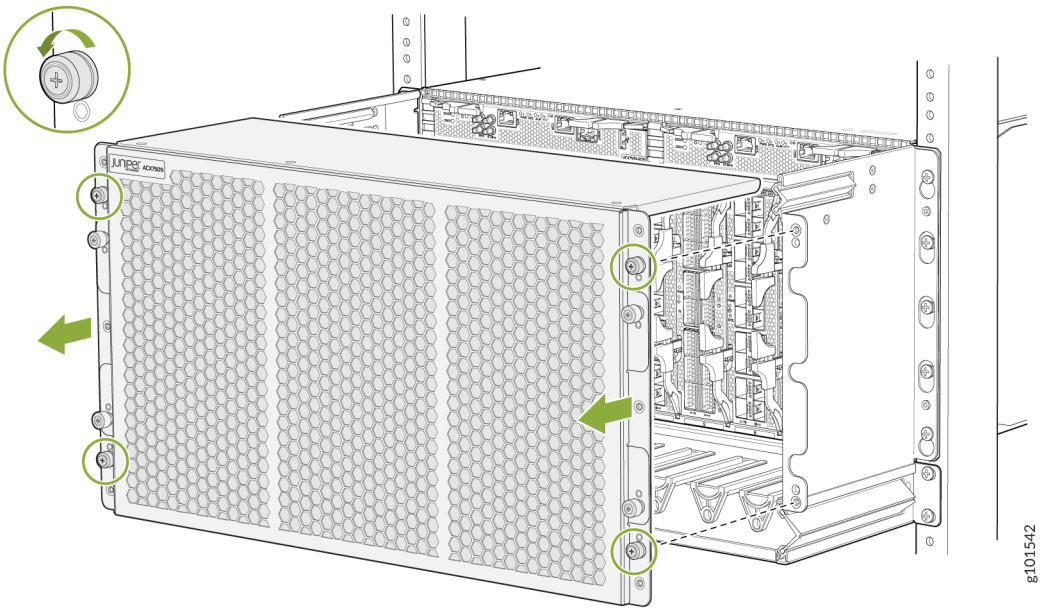

3. Remove the cables arranged in the left and right side covers and the fiber management tray.
4. Loosen the four mounting screws securing the left and right side covers to the ACX7509 chassis, and gently pull the side covers out. See Figure 71 on page 165.
5. Install the mounting screws to secure the chassis to the rack.

6. Loosen the four mounting screws securing the fiber management tray to the rack rails, and remove the fiber management tray. See Figure 71 on page 165.

Figure 71: Removing the Left and Right Side Covers and Fiber Management Tray

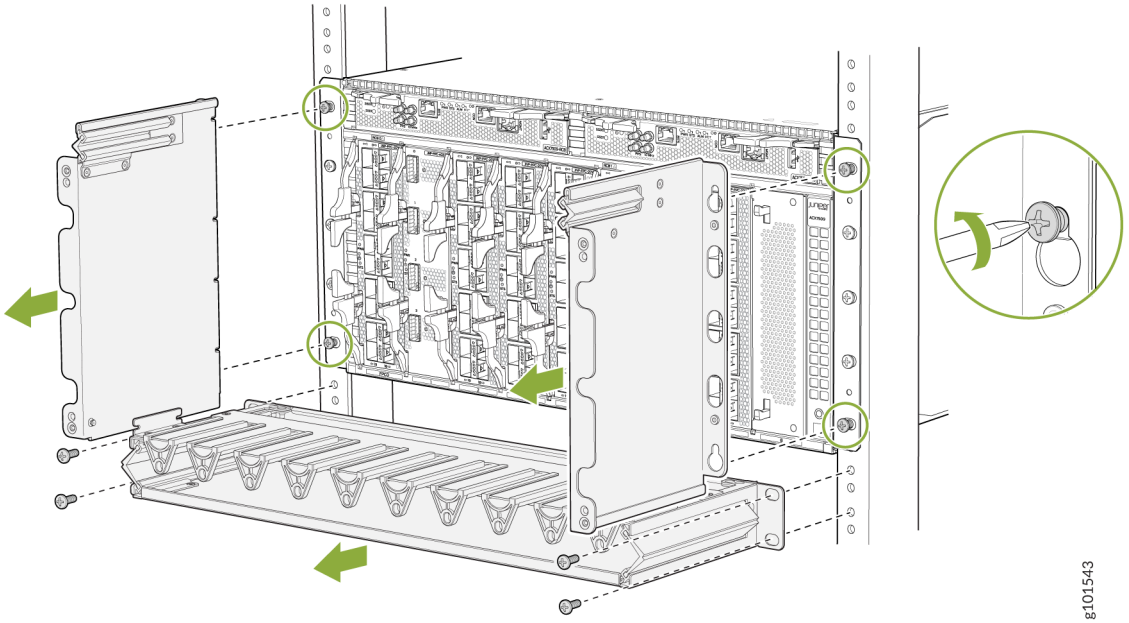

CHAPTER 5

Troubleshooting Hardware

Troubleshooting the ACX7509 Router | 167

Troubleshooting the ACX7509 Router

SUMMARY

Troubleshooting ACX7509 routers includes recognizing alarm types and alarm severity classes and resolving the error conditions that trigger alarms.

IN THIS SECTION

- Alarm Types and Severity Classes on ACX Series Routers | **167**

Alarm Types and Severity Classes on ACX Series Routers

IN THIS SECTION

- Alarm Types | **168**
- Alarm Severity Classes | **168**

Before monitoring the alarms on the router, become familiar with the terms defined in Table 42 on page 167.

Table 42: Alarm Terms

Term	Definition
Alarm	Signal alerting you to conditions that might prevent normal operation. On a router, the alarm signal is the red system LED that is lit on the front of the chassis.
Alarm condition	Failure event that triggers an alarm.
Alarm severity	Seriousness of the alarm. The level of severity can be either major (steady red) or minor (blinking red).
Chassis alarm	Predefined alarm triggered by a physical condition on the router, such as a power failure, excessive component temperature, or media failure.

Table 42: Alarm Terms *(Continued)*

Term	Definition
System alarm	Predefined alarm triggered by a missing rescue configuration or failure to install a license for a licensed software feature.

Alarm Types

The router supports the following types of alarms:

- Chassis alarms indicate a failure on the router or one of its components. Chassis alarms are preset and cannot be modified.
- System alarms indicate a missing rescue configuration. System alarms are preset and cannot be modified, although you can configure them to appear automatically in the J-Web interface display or CLI display.

Alarm Severity Classes

Alarms on ACX Series routers have two severity classes:

- Major (steady red)—Indicates a critical situation on the router that has resulted from one of the following conditions and that requires immediate action:
  - One or more hardware components have failed.
  - One or more hardware components have exceeded temperature thresholds.
  - An alarm condition configured on an interface has triggered a critical warning.
- Minor (blinking red)—Minor (steady amber)—Indicates a noncritical condition on the router that, if left unchecked, might cause an interruption in service or degradation in performance. A minor alarm condition requires monitoring or maintenance.

  A missing rescue configuration generates a minor system alarm.

CHAPTER 6

Contacting Customer Support and Returning the Chassis or Components

Contacting Customer Support | 170

Return Procedures for the ACX7509 Chassis or Components | 171

Contacting Customer Support

IN THIS SECTION

- Global Support | 170
- Support for Third-Party Transceivers | 171

You can contact the Juniper Networks Technical Assistance Center (JTAC) 24 hours a day, seven days a week.

Global Support

Chat	Use the Ask me icon at the bottom right of the Support page to request support 24 hours a day, seven days a week. Don't see the Chat icon? Read this.
Web	Juniper Support Portal Juniper Government Support Portal
Phone	US & Canada (Toll-free): 1-888-314-5822 Outside the US or Canada, use the relevant country number listed on the regional tabs listed on the Contact Support page. Federal Government Support: 1-833-900-1454.

NOTE: We do not support opening new cases via email. Please use one of the above options to contact Global Support.

Support for Third-Party Transceivers

The Juniper Networks Technical Assistance Center (JTAC) provides complete support for Juniper-supplied optical modules and cables. However, JTAC does not provide support for third-party optical modules and cables that are not qualified or supplied by Juniper Networks. If you face a problem running a Juniper device that uses third-party optical modules or cables, JTAC may help you diagnose host-related issues if the observed issue is not, in the opinion of JTAC, related to the use of the third-party optical modules or cables. Your JTAC engineer will likely request that you check the third-party optical module or cable and, if required, replace it with an equivalent Juniper-qualified component.

Use of third-party optical modules with high-power consumption (for example, coherent ZR or ZR+) can potentially cause thermal damage to or reduce the lifespan of the host equipment. Any damage to the host equipment due to the use of third-party optical modules or cables is the users' responsibility. Juniper Networks will accept no liability for any damage caused due to such use.

Return Procedures for the ACX7509 Chassis or Components

SUMMARY

If you need to return a hardware component to Juniper Networks, you need a Return Material Authorization (RMA) number and the equipment serial number. The Juniper Networks Technical Assistance Center (JTAC) can generate an RMA number. You may also need to locate chassis or component details using the CLI or by referring to equipment labels. You then pack and ship the return.

IN THIS SECTION

- How to Return a Hardware Component to Juniper Networks, Inc. | **171**
- How to Locate the Serial Number on an ACX7509 Router or Component | **173**
- Contact Customer Support to Obtain Return Material Authorization | **178**
- Guidelines for Packing and Shipping Hardware Components | **178**

How to Return a Hardware Component to Juniper Networks, Inc.

If a hardware component fails, please contact Juniper Networks, Inc. to obtain a Return Material Authorization (RMA) number. This number is used to track the returned material at the factory and to return repaired or new components to you, as needed.

NOTE: Do not return any component to Juniper Networks, Inc. unless you have first obtained an RMA number. Juniper Networks, Inc. reserves the right to refuse shipments that do not have an RMA number. Refused shipments are returned to you by collect freight.

For more information about return and repair policies, see the customer support webpage at https://support.juniper.net/support/.

For product problems or technical support issues, contact the Juniper Networks Technical Assistance Center (JTAC) in one of the following ways:

- On the Web, using the Service Request Manager link at:

  https://support.juniper.net/support/

- By telephone:
  - From the U.S. and Canada: 1-888-314-JTAC (5822)
  - From all other locations: 1-408-745-9500

    NOTE: If contacting JTAC by telephone, enter your 12-digit service request number followed by the pound (#) key if this is an existing case, or press the star (*) key to be routed to the next available support engineer to report a new incident.

To return a defective hardware component:

1. Determine the part number and serial number of the defective component.
2. Obtain an RMA number from the JTAC. You can send e-mail or contact JTAC by telephone, as described above.
3. Provide the following information in your e-mail message or during the telephone call:
   - Part number and serial number of component
   - Your name, organization name, telephone number, and fax number
   - Description of the failure
4. The support representative validates your request and issues an RMA number for return of the component.
5. Pack the component for shipment. See "Guidelines for Packing and Shipping Hardware Components" on page 178.

How to Locate the Serial Number on an ACX7509 Router or Component

IN THIS SECTION

- List the Chassis and Component Details Using the CLI | **173**
- Locate the Chassis Serial Number ID Label on an ACX7509 Router | **174**
- Locate the Serial Number ID Label on an ACX7509 Fan Tray | **174**
- Locate the Serial Number ID Label on an ACX7509 Power Supply Module | **175**
- Locate the Serial Number ID Label on an ACX7509 Forwarding Engine Board | **175**
- Locate the Serial Number ID Label on an ACX7509 Routing and Control Board | **176**
- Locate the Serial Number ID Label on an ACX7509 Flexible PIC Concentrator | **177**

If you are returning a router or component to Juniper Networks for repair or replacement, you must locate the serial number of the router or component. You must provide the serial number to the Juniper Networks Technical Assistance Center (JTAC) when you contact them to obtain a Return Material Authorization (RMA) number. See No Link Title.

If the router is operational and you can access the CLI, you can list serial numbers for the router and for some components by using a CLI command. If you do not have access to the CLI, or if the serial number for the component does not appear in the command output, you can locate the serial number ID label on the router or component.

NOTE: If you want to find the serial number ID label on a component, you need to remove the component from the router chassis. To do this, you must have the required parts and tools available.

List the Chassis and Component Details Using the CLI

To list the components and serial numbers of ACX7509 routers, use the `show chassis hardware` CLI operational mode command.

Locate the Chassis Serial Number ID Label on an ACX7509 Router

On the ACX7509 router, the chassis serial number ID label is located on the top left corner of the chassis, as shown in Figure 72 on page 174.

Figure 72: ACX7509 Chassis Serial Number Label

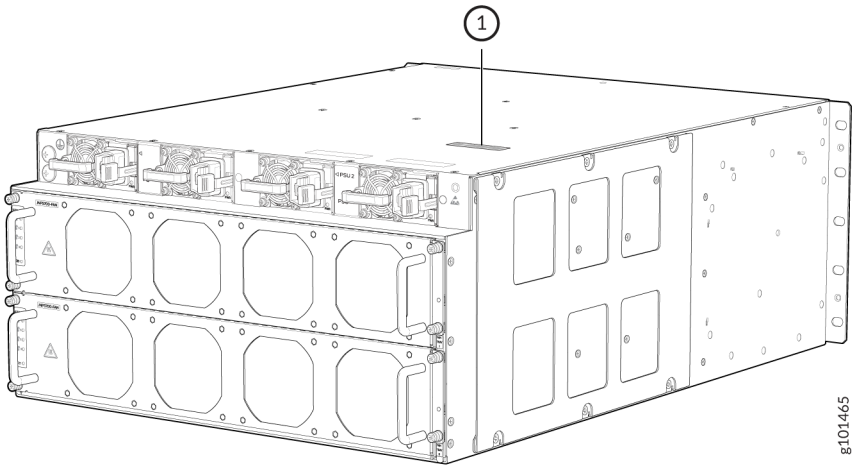

Locate the Serial Number ID Label on an ACX7509 Fan Tray

The fan tray installed in an ACX7509 router is a field-replaceable unit (FRU). For each FRU, you must remove the FRU from the router chassis to see the FRU serial number ID label.

The serial number ID label is on the left side bottom of the fan tray. SeeFigure 73 on page 174

Figure 73: ACX7509 Fan Tray Serial Number Label

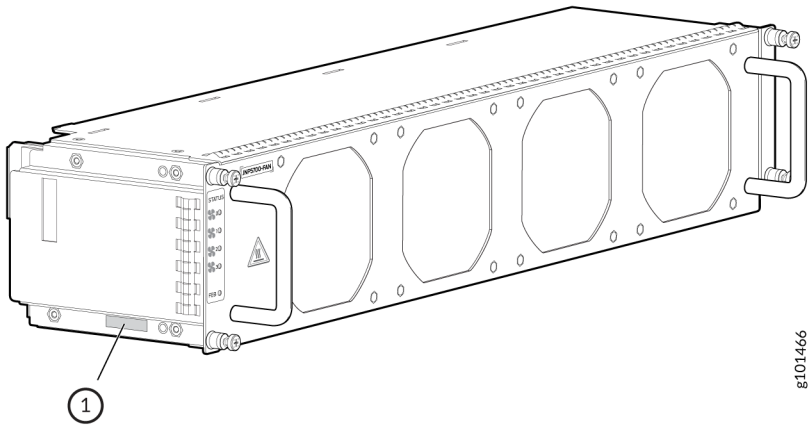

Locate the Serial Number ID Label on an ACX7509 Power Supply Module

The power supply modules (PSMs) installed in an ACX7509 router are field-replaceable units (FRUs). For each FRU, you must remove the FRU from the router chassis to see the FRU serial number ID label.

- AC PSM—The serial number ID label is on the top of the AC PSM. See Figure 74 on page 175.

Figure 74: ACX7509 AC/HVDC PSM Serial Number Label

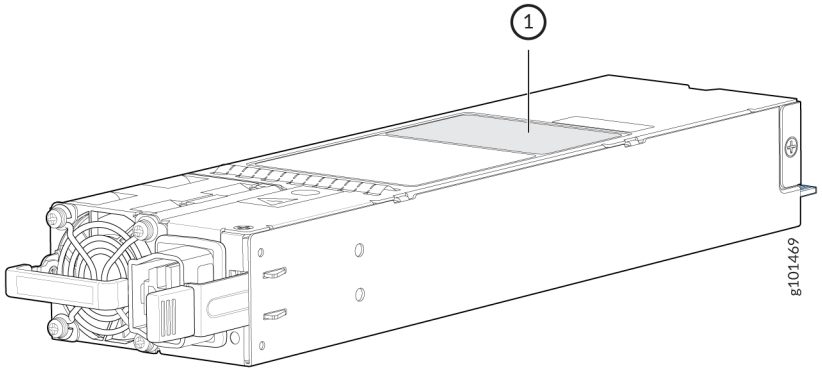

- DC PSM—The serial number ID label is on the top of the DC PSM. See Figure 75 on page 175.

Figure 75: ACX7509 DC PSM Serial Number Label

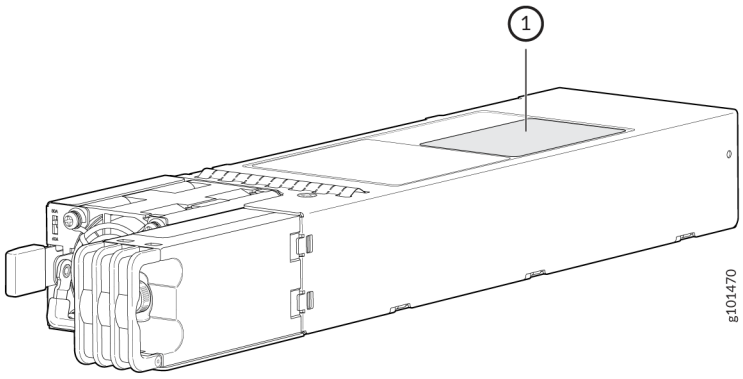

Locate the Serial Number ID Label on an ACX7509 Forwarding Engine Board

The Forwarding Engine Board (FEB) installed in an ACX7509 router is a field-replaceable unit (FRU). For each FRU, you must remove the FRU from the router chassis to see the FRU serial number ID label.

The serial number ID label is under the left ejector handle of the FEB. You need to spread the ejector handles to see the serial number ID. See Figure 76 on page 176.

Figure 76: ACX7509 Forwarding Engine Board Serial Number Label

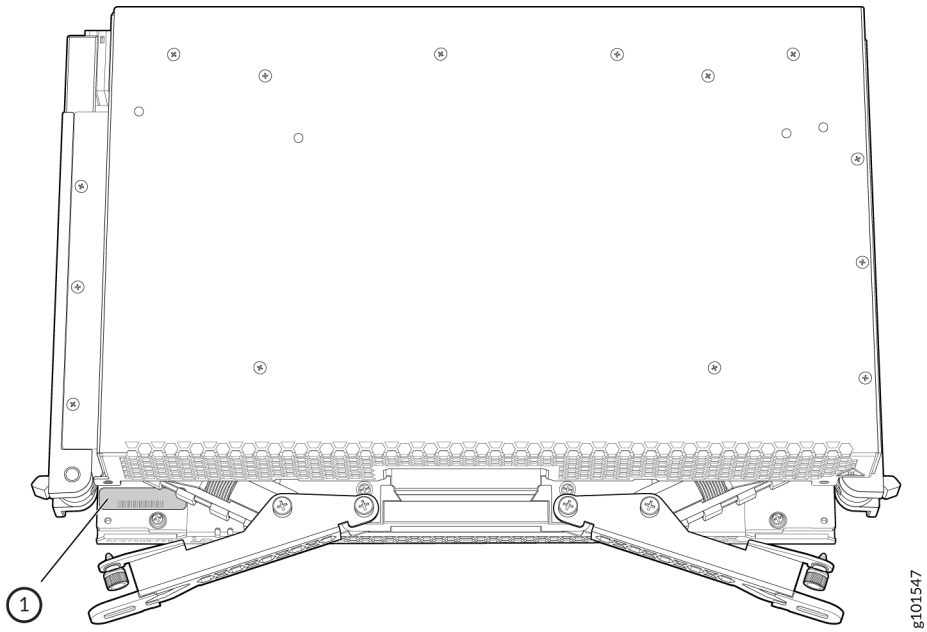

Locate the Serial Number ID Label on an ACX7509 Routing and Control Board

The Routing and Control Boards (RCBs) installed in an ACX7509 router are field-replaceable units (FRUs). For each FRU, you must remove the FRU from the router chassis to see the FRU serial number ID label.

The serial number ID label is located on the top of the RCB. See Figure 77 on page 177.

Figure 77: ACX7509 Routing and Control Board Serial Number Label

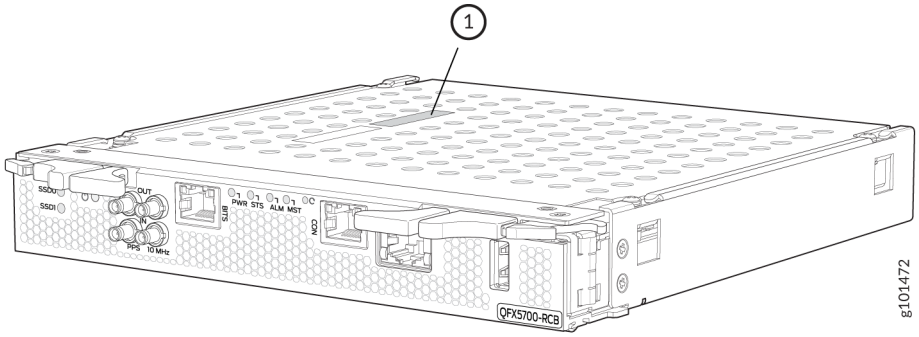

Locate the Serial Number ID Label on an ACX7509 Flexible PIC Concentrator

The Flexible PIC Concentrator (FPC) installed in an ACX7509 router is a field-replaceable unit (FRU). For each FRU, you must remove the FRU from the router chassis to see the FRU serial number ID label.

The serial number ID label is located on the top of the FPC. See Figure 78 on page 177.

Figure 78: ACX7509 Flexible PIC Concentrator Serial Number Label

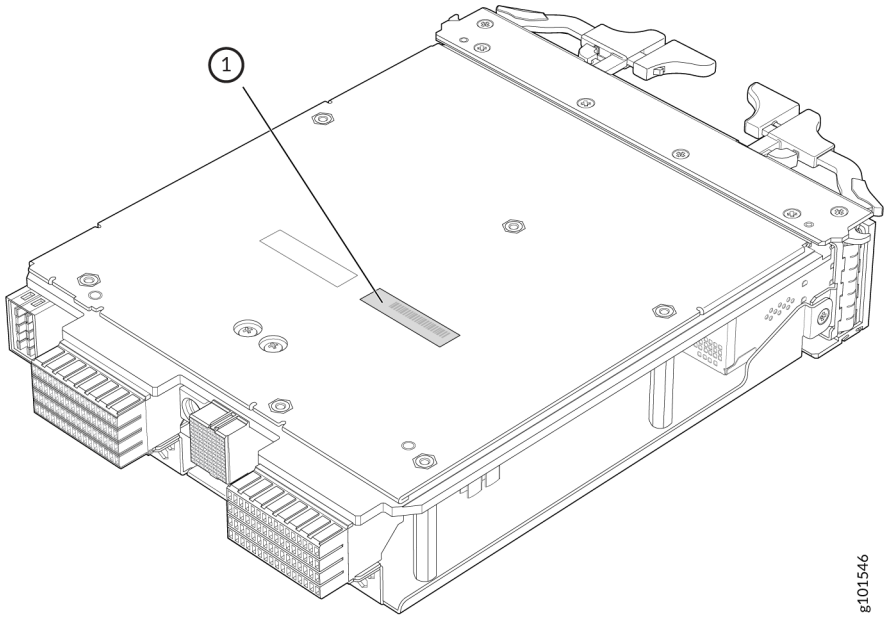

Contact Customer Support to Obtain Return Material Authorization

If you are returning a device or hardware component to Juniper Networks for repair or replacement, obtain a Return Material Authorization (RMA) number from the Juniper Networks Technical Assistance Center (JTAC).

After locating the serial number of the device or component you want to return, open a service request with JTAC on the Web or by telephone.

Before you request an RMA from JTAC, be prepared to provide the following information:

- Your existing service request number, if you have one
- Serial number of the component
- Your name, organization name, telephone number, fax number, and shipping address
- Details of the failure or problem
- Type of activity being performed on the device when the problem occurred
- Configuration data displayed by one or more `show` commands

You can contact JTAC 24 hours a day, seven days a week on the Web or by telephone:

- Service Request Manager: https://support.juniper.net/support/
- Telephone: +1-888-314-JTAC (+1-888-314-5822), toll-free in the USA, Canada, and Mexico

> **NOTE**: For international or direct-dial options in countries without toll-free numbers, see https://support.juniper.net/support/.

If you are contacting JTAC by telephone, enter your 12-digit service request number followed by the pound (#) key for an existing case, or press the star (*) key to be routed to the next available support engineer for a new incident.

The support representative validates your request and issues an RMA number for return of the component.

Guidelines for Packing and Shipping Hardware Components

To pack and ship individual components:

1. When you return components, make sure that they are adequately protected with packing materials and packed so that the pieces are prevented from moving around inside the carton.
2. Use the original shipping materials, if they are available.
3. Place individual components in antistatic bags.
4. Write the RMA number on the exterior of the box to ensure proper tracking.
5. Ship the package.



CAUTION: Do not stack any of the hardware components.

CHAPTER 7

Safety and Compliance Information

General Safety Guidelines and Warnings | 182

Definitions of Safety Warning Levels | 183

Qualified Personnel Warning | 185

Warning Statement for Norway and Sweden | 185

Fire Safety Requirements | 186

Installation Instructions Warning | 187

Restricted Access Warning | 188

Ramp Warning | 189

Chassis and Component Lifting Guidelines | 190

Rack-Mounting and Cabinet-Mounting Warnings | 190

Grounded Equipment Warning | 194

Radiation from Open Port Apertures Warning | 195

Laser and LED Safety Guidelines and Warnings | 196

Maintenance and Operational Safety Guidelines and Warnings | 199

General Electrical Safety Guidelines and Warnings | 205

Prevention of Electrostatic Discharge Damage | 206

Site Electrical Wiring Guidelines | 208

AC Power Electrical Safety Guidelines | 209

AC Power Disconnection Warning | 210

DC Power Disconnection Warning | 211

DC Power Grounding Requirements and Warning | 212

DC Power Wiring Sequence Warning | 213

DC Power Wiring Terminations Warning | 215

Multiple Power Supplies Disconnection Warning | 216

TN Power Warning | 217

Action to Take After an Electrical Accident | 217

Agency Approvals for ACX7509 Routers | 218

Compliance Statements for NEBS | 220

Compliance Statements for EMC Requirements | 220

Compliance Statements for Environmental Requirements | 222

General Safety Guidelines and Warnings

The following guidelines help ensure your safety and protect the device from damage. The list of guidelines might not address all potentially hazardous situations in your working environment, so be alert and exercise good judgment at all times.

- Perform only the procedures explicitly described in the hardware documentation for this device. Make sure that only authorized service personnel perform other system services.
- Keep the area around the device clear and free from dust before, during, and after installation.
- Keep tools away from areas where people could trip over them while walking.
- Do not wear loose clothing or jewelry, such as rings, bracelets, or chains, which could become caught in the device.
- Wear safety glasses if you are working under any conditions that could be hazardous to your eyes.
- Do not perform any actions that create a potential hazard to people or make the equipment unsafe.
- Never attempt to lift an object that is too heavy for one person to handle.
- Never install or manipulate wiring during electrical storms.
- Never install electrical jacks in wet locations unless the jacks are specifically designed for wet environments.
- Operate the device only when it is properly grounded.
- Follow the instructions in this guide to properly ground the device to earth.
- Replace fuses only with fuses of the same type and rating.
- Do not open or remove chassis covers or sheet-metal parts unless instructions are provided in the hardware documentation for this device. Such an action could cause severe electrical shock.
- Do not push or force any objects through any opening in the chassis frame. Such an action could result in electrical shock or fire.
- Avoid spilling liquid onto the chassis or onto any device component. Such an action could cause electrical shock or damage the device.
- Avoid touching uninsulated electrical wires or terminals that have not been disconnected from their power source. Such an action could cause electrical shock.

- Some parts of the chassis, including AC and DC power supply surfaces, power supply unit handles, SFB card handles, and fan tray handles might become hot. The following label provides the warning for hot surfaces on the chassis:



- Always ensure that all modules, power supplies, and cover panels are fully inserted and that the installation screws are fully tightened.

Definitions of Safety Warning Levels

The documentation uses the following levels of safety warnings (there are two *Warning* formats):

NOTE: You might find this information helpful in a particular situation, or you might overlook this important information if it was not highlighted in a Note.

CAUTION: You need to observe the specified guidelines to prevent minor injury or discomfort to you or severe damage to the device.

Attention Veillez à respecter les consignes indiquées pour éviter toute incommodité ou blessure légère, voire des dégâts graves pour l'appareil.

LASER WARNING: This symbol alerts you to the risk of personal injury from a laser.

Avertissement Ce symbole signale un risque de blessure provoquée par rayon laser.

WARNING: This symbol means danger. You are in a situation that could cause bodily injury. Before you work on any equipment, be aware of the hazards involved with electrical circuitry, and familiarize yourself with standard practices for preventing accidents.

Waarschuwing Dit waarschuwingssymbool betekent gevaar. U verkeert in een situatie die lichamelijk letsel kan veroorzaken. Voordat u aan enige apparatuur gaat werken, dient u zich bewust te zijn van de bij elektrische schakelingen betrokken risico's en dient u op de hoogte te zijn van standaard maatregelen om ongelukken te voorkomen.

Varoitus Tämä varoitusmerkki merkitsee vaaraa. Olet tilanteessa, joka voi johtaa ruumiinvammaan. Ennen kuin työskentelet minkään laitteiston parissa, ota selvää sähkökytkentöihin liittyvistä vaaroista ja tavanomaisista onnettomuuksien ehkäisykeinoista.

Avertissement Ce symbole d'avertissement indique un danger. Vous vous trouvez dans une situation pouvant causer des blessures ou des dommages corporels. Avant de travailler sur un équipement, soyez conscient des dangers posés par les circuits électriques et familiarisez-vous avec les procédures couramment utilisées pour éviter les accidents.

Warnung Dieses Warnsymbol bedeutet Gefahr. Sie befinden sich in einer Situation, die zu einer Körperverletzung führen könnte. Bevor Sie mit der Arbeit an irgendeinem Gerät beginnen, seien Sie sich der mit elektrischen Stromkreisen verbundenen Gefahren und der Standardpraktiken zur Vermeidung von Unfällen bewußt.

Avvertenza Questo simbolo di avvertenza indica un pericolo. La situazione potrebbe causare infortuni alle persone. Prima di lavorare su qualsiasi apparecchiatura, occorre conoscere i pericoli relativi ai circuiti elettrici ed essere al corrente delle pratiche standard per la prevenzione di incidenti.

Advarsel Dette varselsymbolet betyr fare. Du befinner deg i en situasjon som kan føre til personskade. Før du utfører arbeid på utstyr, må du vare oppmerksom på de faremomentene som elektriske kretser innebærer, samt gjøre deg kjent med vanlig praksis når det gjelder å unngå ulykker.

Aviso Este símbolo de aviso indica perigo. Encontra-se numa situação que lhe poderá causar danos físicos. Antes de começar a trabalhar com qualquer equipamento, familiarize-se com os perigos relacionados com circuitos eléctricos, e com quaisquer práticas comuns que possam prevenir possíveis acidentes.

¡Atención! Este símbolo de aviso significa peligro. Existe riesgo para su integridad física. Antes de manipular cualquier equipo, considerar los riesgos que entraña la corriente eléctrica y familiarizarse con los procedimientos estándar de prevención de accidentes.

Varning! Denna varningssymbol signalerar fara. Du befinner dig i en situation som kan leda till personskada. Innan du utför arbete på någon utrustning måste du vara medveten om farorna med elkretsar och känna till vanligt förfarande för att förebygga skador.

Qualified Personnel Warning



WARNING: Only trained and qualified personnel should install or replace the device.
Waarschuwing Installatie en reparaties mogen uitsluitend door getraind en bevoegd personeel uitgevoerd worden.

Varoitus Ainoastaan koulutettu ja pätevä henkilökunta saa asentaa tai vaihtaa tämän laitteen.

Avertissement Tout installation ou remplacement de l'appareil doit être réalisé par du personnel qualifié et compétent.

Warnung Gerät nur von geschultem, qualifiziertem Personal installieren oder auswechseln lassen.

Avvertenza Solo personale addestrato e qualificato deve essere autorizzato ad installare o sostituire questo apparecchio.

Advarsel Kun kvalifisert personell med riktig opplæring bør montere eller bytte ut dette utstyret.

Aviso Este equipamento deverá ser instalado ou substituído apenas por pessoal devidamente treinado e qualificado.

¡Atención! Estos equipos deben ser instalados y reemplazados exclusivamente por personal técnico adecuadamente preparado y capacitado.

Varning! Denna utrustning ska endast installeras och bytas ut av utbildad och kvalificerad personal.

Warning Statement for Norway and Sweden



WARNING: The equipment must be connected to an earthed mains socket-outlet.
Advarsel Apparatet skal kobles til en jordet stikkontakt.

Varning! Apparaten skall anslutas till jordat nätuttag.

Fire Safety Requirements

IN THIS SECTION

- Fire Suppression | 186
- Fire Suppression Equipment | 186

In the event of a fire emergency, the safety of people is the primary concern. You should establish procedures for protecting people in the event of a fire emergency, provide safety training, and properly provision fire-control equipment and fire extinguishers.

In addition, you should establish procedures to protect your equipment in the event of a fire emergency. Juniper Networks products should be installed in an environment suitable for electronic equipment. We recommend that fire suppression equipment be available in the event of a fire in the vicinity of the equipment and that all local fire, safety, and electrical codes and ordinances be observed when you install and operate your equipment.

Fire Suppression

In the event of an electrical hazard or an electrical fire, you should first turn power off to the equipment at the source. Then use a Type C fire extinguisher, which uses noncorrosive fire retardants, to extinguish the fire.

Fire Suppression Equipment

Type C fire extinguishers, which use noncorrosive fire retardants such as carbon dioxide and Halotron™, are most effective for suppressing electrical fires. Type C fire extinguishers displace oxygen from the point of combustion to eliminate the fire. For extinguishing fire on or around equipment that draws air from the environment for cooling, you should use this type of inert oxygen displacement extinguisher instead of an extinguisher that leaves residues on equipment.

Do not use multipurpose Type ABC chemical fire extinguishers (dry chemical fire extinguishers). The primary ingredient in these fire extinguishers is monoammonium phosphate, which is very sticky and

difficult to clean. In addition, in the presence of minute amounts of moisture, monoammonium phosphate can become highly corrosive and corrodes most metals.

Any equipment in a room in which a chemical fire extinguisher has been discharged is subject to premature failure and unreliable operation. The equipment is considered to be irreparably damaged.

NOTE: To keep warranties effective, do not use a dry chemical fire extinguisher to control a fire at or near a Juniper Networks device. If a dry chemical fire extinguisher is used, the unit is no longer eligible for coverage under a service agreement.

We recommend that you dispose of any irreparably damaged equipment in an environmentally responsible manner.

Installation Instructions Warning



WARNING: Read the installation instructions before you connect the device to a power source.

Waarschuwing Raadpleeg de installatie-aanwijzingen voordat u het systeem met de voeding verbindt.

Varoitus Lue asennusohjeet ennen järjestelmän yhdistämistä virtalähteeseen.

Avertissement Avant de brancher le système sur la source d'alimentation, consulter les directives d'installation.

Warnung Lesen Sie die Installationsanweisungen, bevor Sie das System an die Stromquelle anschließen.

Avvertenza Consultare le istruzioni di installazione prima di collegare il sistema all'alimentatore.

Advarsel Les installasjonsinstruksjonene før systemet kobles til strømkilden.

Aviso Leia as instruções de instalação antes de ligar o sistema à sua fonte de energia.

¡Atención! Ver las instrucciones de instalación antes de conectar el sistema a la red de alimentación.

Varning! Läs installationsanvisningarna innan du kopplar systemet till dess strömförsörjningsenhet.

Restricted Access Warning



WARNING: This unit is intended for installation in restricted access areas. A restricted access area is an area to which access can be gained only by service personnel through the use of a special tool, lock and key, or other means of security, and which is controlled by the authority responsible for the location.

Waarschuwing Dit toestel is bedoeld voor installatie op plaatsen met beperkte toegang. Een plaats met beperkte toegang is een plaats waar toegang slechts door servicepersoneel verkregen kan worden door middel van een speciaal instrument, een slot en sleutel, of een ander veiligheidsmiddel, en welke beheerd wordt door de overheidsinstantie die verantwoordelijk is voor de locatie.

Varoitus Tämä laite on tarkoitettu asennettavaksi paikkaan, johon pääsy on rajoitettua. Paikka, johon pääsy on rajoitettua, tarkoittaa paikkaa, johon vain huoltohenkilöstö pääsee jonkin erikoistyökalun, lukkoon sopivan avaimen tai jonkin muun turvalaitteen avulla ja joka on paikasta vastuussa olevien toimivaltaisten henkilöiden valvoma.

Avertissement Cet appareil est à installer dans des zones d'accès réservé. Ces dernières sont des zones auxquelles seul le personnel de service peut accéder en utilisant un outil spécial, un mécanisme de verrouillage et une clé, ou tout autre moyen de sécurité. L'accès aux zones de sécurité est sous le contrôle de l'autorité responsable de l'emplacement.

Warnung Diese Einheit ist zur Installation in Bereichen mit beschränktem Zutritt vorgesehen. Ein Bereich mit beschränktem Zutritt ist ein Bereich, zu dem nur Wartungspersonal mit einem Spezialwerkzeugs, Schloß und Schlüssel oder anderer Sicherheitsvorkehrungen Zugang hat, und der von dem für die Anlage zuständigen Gremium kontrolliert wird.

Avvertenza Questa unità deve essere installata in un'area ad accesso limitato. Un'area ad accesso limitato è un'area accessibile solo a personale di assistenza tramite un'attrezzo speciale, lucchetto, o altri dispositivi di sicurezza, ed è controllata dall'autorità responsabile della zona.

Advarsel Denne enheten er laget for installasjon i områder med begrenset adgang. Et område med begrenset adgang gir kun adgang til servicepersonale som bruker et spesielt verktøy, lås og nøkkel, eller en annen sikkerhetsanordning, og det kontrolleres av den autoriteten som er ansvarlig for området.

Aviso Esta unidade foi concebida para instalação em áreas de acesso restrito. Uma área de acesso restrito é uma área à qual apenas tem acesso o pessoal de serviço autorizado,

que possua uma ferramenta, chave e fechadura especial, ou qualquer outra forma de segurança. Esta área é controlada pela autoridade responsável pelo local.

¡Atención! Esta unidad ha sido diseñada para instalarse en áreas de acceso restringido. Área de acceso restringido significa un área a la que solamente tiene acceso el personal de servicio mediante la utilización de una herramienta especial, cerradura con llave, o algún otro medio de seguridad, y que está bajo el control de la autoridad responsable del local.

Varning! Denna enhet är avsedd för installation i områden med begränsat tillträde. Ett område med begränsat tillträde får endast tillträdas av servicepersonal med ett speciellt verktyg, lås och nyckel, eller annan säkerhetsanordning, och kontrolleras av den auktoritet som ansvarar för området.

Ramp Warning



WARNING: When installing the device, do not use a ramp inclined at more than 10 degrees.
Waarschuwing Gebruik een oprijplaat niet onder een hoek van meer dan 10 graden.

Varoitus Älä käytä sellaista kaltevaa pintaa, jonka kaltevuus ylittää 10 astetta.

Avertissement Ne pas utiliser une rampe dont l'inclinaison est supérieure à 10 degrés.

Warnung Keine Rampen mit einer Neigung von mehr als 10 Grad verwenden.

Avvertenza Non usare una rampa con pendenza superiore a 10 gradi.

Advarsel Bruk aldri en rampe som heller mer enn 10 grader.

Aviso Não utilize uma rampa com uma inclinação superior a 10 graus.

¡Atención! No usar una rampa inclinada más de 10 grados.

Varning! Använd inte ramp med en lutning på mer än 10 grader.

Chassis and Component Lifting Guidelines

- Before moving the device to a site, ensure that the site meets the power, environmental, and clearance requirements.
- Before lifting or moving the device, disconnect all external cables and wires.
- As when lifting any heavy object, ensure that your legs bear most of the weight rather than your back. Keep your knees bent and your back relatively straight. Do not twist your body as you lift. Balance the load evenly and be sure that your footing is firm.
- Use the following lifting guidelines to lift devices and components:
  - Up to 39.7 lb (18 kg): One person.
  - From 39.7 lb (18 kg) to 70.5 lb (32 kg): Two or more people.
  - From 70.5 lb (32 kg) to 121.2 lb (55 kg): Three or more people.
  - Above 121.2 lb (55 kg): Use material handling systems (such as levers, slings, lifts, and so on). When this is not practical, engage specially trained persons or systems (such as riggers or movers).

Rack-Mounting and Cabinet-Mounting Warnings

Ensure that the rack or cabinet in which the device is installed is evenly and securely supported. Uneven mechanical loading could lead to a hazardous condition.



WARNING: To prevent bodily injury when mounting or servicing the device in a rack, take the following precautions to ensure that the system remains stable. The following directives help maintain your safety:

- Install the device in a rack that is secured to the building structure.
- Mount the device at the bottom of the rack if it is the only unit in the rack.
- When mounting the device on a partially filled rack, load the rack from the bottom to the top, with the heaviest component at the bottom of the rack.
- If the rack is provided with stabilizing equipment, install the stabilizers before mounting or servicing the device in the rack.

Waarschuwing Om lichamelijk letsel te voorkomen wanneer u dit toestel in een rek monteert of het daar een servicebeurt geeft, moet u speciale voorzorgsmaatregelen nemen om ervoor te zorgen dat het toestel stabiel blijft. De onderstaande richtlijnen worden verstrekt om uw veiligheid te verzekeren:

- De Juniper Networks switch moet in een stellage worden geïnstalleerd die aan een bouwsel is verankerd.
- Dit toestel dient onderaan in het rek gemonteerd te worden als het toestel het enige in het rek is.
- Wanneer u dit toestel in een gedeeltelijk gevuld rek monteert, dient u het rek van onderen naar boven te laden met het zwaarste onderdeel onderaan in het rek.
- Als het rek voorzien is van stabiliseringshulpmiddelen, dient u de stabilisatoren te monteren voordat u het toestel in het rek monteert of het daar een servicebeurt geeft.

Varoitus Kun laite asetetaan telineeseen tai huolletaan sen ollessa telineessä, on noudatettava erityisiä varotoimia järjestelmän vakavuuden säilyttämiseksi, jotta vältytään loukkaantumiselta. Noudata seuraavia turvallisuusohjeita:

- Juniper Networks switch on asennettava telineeseen, joka on kiinnitetty rakennukseen.
- Jos telineessä ei ole muita laitteita, aseta laite telineen alaosaan.
- Jos laite asetetaan osaksi täytettyyn telineeseen, aloita kuormittaminen sen alaosasta kaikkein raskaimmalla esineellä ja siirry sitten sen yläosaan.
- Jos telinettä varten on vakaimet, asenna ne ennen laitteen asettamista telineeseen tai sen huoltamista siinä.

Avertissement Pour éviter toute blessure corporelle pendant les opérations de montage ou de réparation de cette unité en casier, il convient de prendre des précautions spéciales afin de maintenir la stabilité du système. Les directives ci-dessous sont destinées à assurer la protection du personnel:

- Le rack sur lequel est monté le Juniper Networks switch doit être fixé à la structure du bâtiment.
- Si cette unité constitue la seule unité montée en casier, elle doit être placée dans le bas.

- Si cette unité est montée dans un casier partiellement rempli, charger le casier de bas en haut en plaçant l'élément le plus lourd dans le bas.
- Si le casier est équipé de dispositifs stabilisateurs, installer les stabilisateurs avant de monter ou de réparer l'unité en casier.

Warnung Zur Vermeidung von Körperverletzung beim Anbringen oder Warten dieser Einheit in einem Gestell müssen Sie besondere Vorkehrungen treffen, um sicherzustellen, daß das System stabil bleibt. Die folgenden Richtlinien sollen zur Gewährleistung Ihrer Sicherheit dienen:

- Der Juniper Networks switch muß in einem Gestell installiert werden, das in der Gebäudestruktur verankert ist.
- Wenn diese Einheit die einzige im Gestell ist, sollte sie unten im Gestell angebracht werden.
- Bei Anbringung dieser Einheit in einem zum Teil gefüllten Gestell ist das Gestell von unten nach oben zu laden, wobei das schwerste Bauteil unten im Gestell anzubringen ist.
- Wird das Gestell mit Stabilisierungszubehör geliefert, sind zuerst die Stabilisatoren zu installieren, bevor Sie die Einheit im Gestell anbringen oder sie warten.

Avvertenza Per evitare infortuni fisici durante il montaggio o la manutenzione di questa unità in un supporto, occorre osservare speciali precauzioni per garantire che il sistema rimanga stabile. Le seguenti direttive vengono fornite per garantire la sicurezza personale:

- Il Juniper Networks switch deve essere installato in un telaio, il quale deve essere fissato alla struttura dell'edificio.
- Questa unità deve venire montata sul fondo del supporto, se si tratta dell'unica unità da montare nel supporto.
- Quando questa unità viene montata in un supporto parzialmente pieno, caricare il supporto dal basso all'alto, con il componente più pesante sistemato sul fondo del supporto.
- Se il supporto è dotato di dispositivi stabilizzanti, installare tali dispositivi prima di montare o di procedere alla manutenzione dell'unità nel supporto.

Advarsel Unngå fysiske skader under montering eller reparasjonsarbeid på denne enheten når den befinner seg i et kabinett. Vær nøye med at systemet er stabilt. Følgende retningslinjer er gitt for å verne om sikkerheten:

- Juniper Networks switch må installeres i et stativ som er forankret til bygningsstrukturen.
- Denne enheten bør monteres nederst i kabinettet hvis dette er den eneste enheten i kabinettet.
- Ved montering av denne enheten i et kabinett som er delvis fylt, skal kabinettet lastes fra bunnen og opp med den tyngste komponenten nederst i kabinettet.
- Hvis kabinettet er utstyrt med stabiliseringsutstyr, skal stabilisatorene installeres før montering eller utføring av reparasjonsarbeid på enheten i kabinettet.

Aviso Para se prevenir contra danos corporais ao montar ou reparar esta unidade numa estante, deverá tomar precauções especiais para se certificar de que o sistema possui um suporte estável. As seguintes directrizes ajudá-lo-ão a efectuar o seu trabalho com segurança:

- O Juniper Networks switch deverá ser instalado numa prateleira fixa à estrutura do edificio.
- Esta unidade deverá ser montada na parte inferior da estante, caso seja esta a única unidade a ser montada.
- Ao montar esta unidade numa estante parcialmente ocupada, coloque os itens mais pesados na parte inferior da estante, arrumando-os de baixo para cima.
- Se a estante possuir um dispositivo de estabilização, instale-o antes de montar ou reparar a unidade.

¡Atención! Para evitar lesiones durante el montaje de este equipo sobre un bastidor, oeriormente durante su mantenimiento, se debe poner mucho cuidado en que el sistema quede bien estable. Para garantizar su seguridad, proceda según las siguientes instrucciones:

- El Juniper Networks switch debe instalarse en un bastidor fijado a la estructura del edificio.
- Colocar el equipo en la parte inferior del bastidor, cuando sea la única unidad en el mismo.

- Cuando este equipo se vaya a instalar en un bastidor parcialmente ocupado, comenzar la instalación desde la parte inferior hacia la superior colocando el equipo más pesado en la parte inferior.
- Si el bastidor dispone de dispositivos estabilizadores, instalar éstos antes de montar o proceder al mantenimiento del equipo instalado en el bastidor.

Varning! För att undvika kroppsskada när du installerar eller utför underhållsarbete på denna enhet på en ställning måste du vidta särskilda försiktighetsåtgärder för att försäkra dig om att systemet står stadigt. Följande riktlinjer ges för att trygga din säkerhet:

- Juniper Networks switch måste installeras i en ställning som är förankrad i byggnadens struktur.
- Om denna enhet är den enda enheten på ställningen skall den installeras längst ned på ställningen.
- Om denna enhet installeras på en delvis fylld ställning skall ställningen fyllas nedifrån och upp, med de tyngsta enheterna längst ned på ställningen.
- Om ställningen är försedd med stabiliseringsdon skall dessa monteras fast innan enheten installeras eller underhålls på ställningen.

Grounded Equipment Warning



WARNING: This device must be properly grounded at all times. Follow the instructions in this guide to properly ground the device to earth.

Waarschuwing Dit apparaat moet altijd goed geaard zijn. Volg de instructies in deze gids om het apparaat goed te aarden.

Varoitus Laitteen on oltava pysyvästi maadoitettu. Maadoita laite asianmukaisesti noudattamalla tämän oppaan ohjeita.

Avertissement L'appareil doit être correctement mis à la terre à tout moment. Suivez les instructions de ce guide pour correctement mettre l'appareil à la terre.

Warnung Das Gerät muss immer ordnungsgemäß geerdet sein. Befolgen Sie die Anweisungen in dieser Anleitung, um das Gerät ordnungsgemäß zu erden.

Avvertenza Questo dispositivo deve sempre disporre di una connessione a massa. Seguire le istruzioni indicate in questa guida per connettere correttamente il dispositivo a massa.

Advarsel Denne enheten på jordes skikkelig hele tiden. Følg instruksjonene i denne veiledningen for å jorde enheten.

Aviso Este equipamento deverá estar ligado à terra. Siga las instrucciones en esta guía para conectar correctamente este dispositivo a tierra.

¡Atención! Este dispositivo debe estar correctamente conectado a tierra en todo momento. Siga las instrucciones en esta guía para conectar correctamente este dispositivo a tierra.

Varning! Den här enheten måste vara ordentligt jordad. Följ instruktionerna i den här guiden för att jorda enheten ordentligt.

Radiation from Open Port Apertures Warning



LASER WARNING: Because invisible radiation might be emitted from the aperture of the port when no fiber cable is connected, avoid exposure to radiation and do not stare into open apertures.

Waarschuwing Aangezien onzichtbare straling vanuit de opening van de poort kan komen als er geen fiberkabel aangesloten is, dient blootstelling aan straling en het kijken in open openingen vermeden te worden.

Varoitus Koska portin aukosta voi emittoitua näkymätöntä säteilyä, kun kuitukaapelia ei ole kytkettynä, vältä säteilylle altistumista äläkä katso avoimiin aukkoihin.

Avertissement Des radiations invisibles à l'il nu pouvant traverser l'ouverture du port lorsqu'aucun câble en fibre optique n'y est connecté, il est recommandé de ne pas regarder fixement l'intérieur de ces ouvertures.

Warnung Aus der Port-Öffnung können unsichtbare Strahlen emittieren, wenn kein Glasfaserkabel angeschlossen ist. Vermeiden Sie es, sich den Strahlungen auszusetzen, und starren Sie nicht in die Öffnungen!

Avvertenza Quando i cavi in fibra non sono inseriti, radiazioni invisibili possono essere emesse attraverso l'apertura della porta. Evitate di esporvi alle radiazioni e non guardate direttamente nelle aperture.

Advarsel Unngå utsettelse for stråling, og stirr ikke inn i åpninger som er åpne, fordi usynlig stråling kan emiteres fra portens åpning når det ikke er tilkoblet en fiberkabel.

Aviso Dada a possibilidade de emissão de radiação invisível através do orifício da via de acesso, quando esta não tiver nenhum cabo de fibra conectado, deverá evitar an EXposição à radiação e não deverá olhar fixamente para orifícios que se encontrarem a descoberto.

¡Atención! Debido a que la apertura del puerto puede emitir radiación invisible cuando no existe un cable de fibra conectado, evite mirar directamente a las aperturas para no exponerse a la radiación.

Varning! Osynlig strålning kan avges från en portöppning utan ansluten fiberkabel och du bör därför undvika att bli utsatt för strålning genom att inte stirra in i oskyddade öppningar.

Laser and LED Safety Guidelines and Warnings

IN THIS SECTION

- General Laser Safety Guidelines | **197**
- Class 1 Laser Product Warning | **197**
- Class 1 LED Product Warning | **198**
- Laser Beam Warning | **198**

Juniper Networks devices are equipped with laser transmitters, which are considered a Class 1 Laser Product by the U.S. Food and Drug Administration and are evaluated as a Class 1 Laser Product per IEC/EN 60825-1 requirements.

Observe the following guidelines and warnings:

General Laser Safety Guidelines

When working around ports that support optical transceivers, observe the following safety guidelines to prevent eye injury:

- Do not look into unterminated ports or at fibers that connect to unknown sources.
- Do not examine unterminated optical ports with optical instruments.
- Avoid direct exposure to the beam.



LASER WARNING: Unterminated optical connectors can emit invisible laser radiation. The lens in the human eye focuses all the laser power on the retina, so focusing the eye directly on a laser source—even a low-power laser—could permanently damage the eye.

Avertissement Les connecteurs à fibre optique sans terminaison peuvent émettre un rayonnement laser invisible. Le cristallin de l'œil humain faisant converger toute la puissance du laser sur la rétine, toute focalisation directe de l'œil sur une source laser, —même de faible puissance—, peut entraîner des lésions oculaires irréversibles.

Class 1 Laser Product Warning



LASER WARNING: Class 1 laser product.
Waarschuwing Klasse-1 laser produkt.

Varoitus Luokan 1 lasertuote.

Avertissement Produit laser de classe I.

Warnung Laserprodukt der Klasse 1.

Avvertenza Prodotto laser di Classe 1.

Advarsel Laserprodukt av klasse 1.

Aviso Produto laser de classe 1.

¡Atención! Producto láser Clase I.

Varning! Laserprodukt av klass 1.

Class 1 LED Product Warning



LASER WARNING: Class 1 LED product.
Waarschuwing Klasse 1 LED-product.

Varoitus Luokan 1 valodiodituote.

Avertissement Alarme de produit LED Class I.

Warnung Class 1 LED-Produktwarnung.

Avvertenza Avvertenza prodotto LED di Classe 1.

Advarsel LED-produkt i klasse 1.

Aviso Produto de classe 1 com LED.

¡Atención! Aviso sobre producto LED de Clase 1.

Varning! Lysdiodprodukt av klass 1.

Laser Beam Warning



LASER WARNING: Do not stare into the laser beam or view it directly with optical instruments.
Waarschuwing Niet in de straal staren of hem rechtstreeks bekijken met optische instrumenten.

Varoitus Älä katso säteeseen äläkä tarkastele sitä suoraan optisen laitteen avulla.

Avertissement Ne pas fixer le faisceau des yeux, ni l'observer directement à l'aide d'instruments optiques.

Warnung Nicht direkt in den Strahl blicken und ihn nicht direkt mit optischen Geräten prüfen.

Avvertenza Non fissare il raggio con gli occhi né usare strumenti ottici per osservarlo direttamente.

Advarsel Stirr eller se ikke direkte p strlen med optiske instrumenter.

Aviso Não olhe fixamente para o raio, nem olhe para ele directamente com instrumentos ópticos.

¡Atención! No mirar fijamente el haz ni observarlo directamente con instrumentos ópticos.

Varning! Rikta inte blicken in mot strålen och titta inte direkt på den genom optiska instrument.

Maintenance and Operational Safety Guidelines and Warnings

IN THIS SECTION

- Battery Handling Warning | **199**
- Jewelry Removal Warning | **200**
- Lightning Activity Warning | **202**
- Operating Temperature Warning | **203**
- Product Disposal Warning | **204**

While performing the maintenance activities for devices, observe the following guidelines and warnings:

Battery Handling Warning



WARNING: Replacing a battery incorrectly might result in an explosion. Replace a battery only with the same or equivalent type recommended by the manufacturer. Dispose of used batteries according to the manufacturer's instructions.

Waarschuwing Er is ontploffingsgevaar als de batterij verkeerd vervangen wordt. Vervang de batterij slechts met hetzelfde of een equivalent type dat door de fabrikant

aanbevolen is. Gebruikte batterijen dienen overeenkomstig fabrieksvoorschriften weggeworpen te worden.

Varoitus Räjähdyksen vaara, jos akku on vaihdettu väärään akkuun. Käytä vaihtamiseen ainoastaan saman- tai vastaavantyyppistä akkua, joka on valmistajan suosittelema. Hävitä käytetyt akut valmistajan ohjeiden mukaan.

Avertissement Danger d'explosion si la pile n'est pas remplacée correctement. Ne la remplacer que par une pile de type semblable ou équivalent, recommandée par le fabricant. Jeter les piles usagées conformément aux instructions du fabricant.

Warnung Bei Einsetzen einer falschen Batterie besteht Explosionsgefahr. Ersetzen Sie die Batterie nur durch den gleichen oder vom Hersteller empfohlenen Batterietyp. Entsorgen Sie die benutzten Batterien nach den Anweisungen des Herstellers.

Advarsel Det kan være fare for eksplosjon hvis batteriet skiftes på feil måte. Skift kun med samme eller tilsvarende type som er anbefalt av produsenten. Kasser brukte batterier i henhold til produsentens instruksjoner.

Avvertenza Pericolo di esplosione se la batteria non è installata correttamente. Sostituire solo con una di tipo uguale o equivalente, consigliata dal produttore. Eliminare le batterie usate secondo le istruzioni del produttore.

Aviso Existe perigo de explosão se a bateria for substituída incorrectamente. Substitua a bateria por uma bateria igual ou de um tipo equivalente recomendado pelo fabricante. Destrua as baterias usadas conforme as instruções do fabricante.

¡Atención! Existe peligro de explosión si la batería se reemplaza de manera incorrecta. Reemplazar la baterían EXclusivamente con el mismo tipo o el equivalente recomendado por el fabricante. Desechar las baterías gastadas según las instrucciones del fabricante.

Varning! Explosionsfara vid felaktigt batteribyte. Ersätt endast batteriet med samma batterityp som rekommenderas av tillverkaren eller motsvarande. Följ tillverkarens anvisningar vid kassering av använda batterier.

Jewelry Removal Warning



WARNING: Before working on equipment that is connected to power lines, remove jewelry, including rings, necklaces, and watches. Metal objects heat up when connected to power and ground and can cause serious burns or can be welded to the terminals.

Waarschuwing Alvorens aan apparatuur te werken die met elektrische leidingen is verbonden, sieraden (inclusief ringen, kettingen en horloges) verwijderen. Metalen voorwerpen worden warm wanneer ze met stroom en aarde zijn verbonden, en kunnen ernstige brandwonden veroorzaken of het metalen voorwerp aan de aansluitklemmen lassen.

Varoitus Ennen kuin työskentelet voimavirtajohtoihin kytkettyjen laitteiden parissa, ota pois kaikki korut (sormukset, kaulakorut ja kellot mukaan lukien). Metalliesineet kuumenevat, kun ne ovat yhteydessä sähkövirran ja maan kanssa, ja ne voivat aiheuttaa vakavia palovammoja tai hitsata metalliesineet kiinni liitäntänapoihin.

Avertissement Avant d'accéder à cet équipement connecté aux lignes électriques, ôter tout bijou (anneaux, colliers et montres compris). Lorsqu'ils sont branchés à l'alimentation et reliés à la terre, les objets métalliques chauffent, ce qui peut provoquer des blessures graves ou souder l'objet métallique aux bornes.

Warnung Vor der Arbeit an Geräten, die an das Netz angeschlossen sind, jeglichen Schmuck (einschließlich Ringe, Ketten und Uhren) abnehmen. Metallgegenstände erhitzen sich, wenn sie an das Netz und die Erde angeschlossen werden, und können schwere Verbrennungen verursachen oder an die Anschlußklemmen angeschweißt werden.

Avvertenza Prima di intervenire su apparecchiature collegate alle linee di alimentazione, togliersi qualsiasi monile (inclusi anelli, collane, braccialetti ed orologi). Gli oggetti metallici si riscaldano quando sono collegati tra punti di alimentazione e massa: possono causare ustioni gravi oppure il metallo può saldarsi ai terminali.

Advarsel Fjern alle smykker (inkludert ringer, halskjeder og klokker) før du skal arbeide på utstyr som er koblet til kraftledninger. Metallgjenstander som er koblet til kraftledninger og jord blir svært varme og kan forårsake alvorlige brannskader eller smelte fast til polene.

Aviso Antes de trabalhar em equipamento que esteja ligado a linhas de corrente, retire todas as jóias que estiver a usar (incluindo anéis, fios e relógios). Os objectos metálicos aquecerão em contacto com a corrente e em contacto com a ligação à terra, podendo causar queimaduras graves ou ficarem soldados aos terminais.

¡Atención! Antes de operar sobre equipos conectados a líneas de alimentación, quitarse las joyas (incluidos anillos, collares y relojes). Los objetos de metal se calientan cuando se conectan a la alimentación y a tierra, lo que puede ocasionar quemaduras graves o que los objetos metálicos queden soldados a los bornes.

Varning! Tag av alla smycken (inklusive ringar, halsband och armbandsur) innan du arbetar på utrustning som är kopplad till kraftledningar. Metallobjekt hettas upp när de kopplas ihop med ström och jord och kan förorsaka allvarliga brännskador; metallobjekt kan också sammansvetsas med kontakterna.

Lightning Activity Warning



WARNING: Do not work on the system or connect or disconnect cables during periods of lightning activity.

Waarschuwing Tijdens onweer dat gepaard gaat met bliksem, dient u niet aan het systeem te werken of kabels aan te sluiten of te ontkoppelen.

Varoitus Älä työskentele järjestelmän parissa äläkä yhdistä tai irrota kaapeleita ukkosilmalla.

Avertissement Ne pas travailler sur le système ni brancher ou débrancher les câbles pendant un orage.

Warnung Arbeiten Sie nicht am System und schließen Sie keine Kabel an bzw. trennen Sie keine ab, wenn es gewittert.

Avvertenza Non lavorare sul sistema o collegare oppure scollegare i cavi durante un temporale con fulmini.

Advarsel Utfør aldri arbeid på systemet, eller koble kabler til eller fra systemet når det tordner eller lyner.

Aviso Não trabalhe no sistema ou ligue e desligue cabos durante períodos de mau tempo (trovoada).

¡Atención! No operar el sistema ni conectar o desconectar cables durante el transcurso de descargas eléctricas en la atmósfera.

Varning! Vid åska skall du aldrig utföra arbete på systemet eller ansluta eller koppla loss kablar.

Operating Temperature Warning



WARNING: To prevent the device from overheating, do not operate it in an area that exceeds the maximum recommended ambient temperature. To prevent airflow restriction, allow at least 6 in. (15.2 cm) of clearance around the ventilation openings.

Waarschuwing Om te voorkomen dat welke switch van de Juniper Networks router dan ook oververhit raakt, dient u deze niet te bedienen op een plaats waar de maximale aanbevolen omgevingstemperatuur van 40° C wordt overschreden. Om te voorkomen dat de luchtstroom wordt beperkt, dient er minstens 15,2 cm speling rond de ventilatie-openingen te zijn.

Varoitus Ettei Juniper Networks switch-sarjan reititin ylikuumentuisi, sitä ei saa käyttää tilassa, jonka lämpötila ylittää korkeimman suositellun ympäristölämpötilan 40° C. Ettei ilmanvaihto estyisi, tuuletusaukkojen ympärille on jätettävä ainakin 15,2 cm tilaa.

Avertissement Pour éviter toute surchauffe des routeurs de la gamme Juniper Networks switch, ne l'utilisez pas dans une zone où la température ambiante est supérieure à 40° C. Pour permettre un flot d'air constant, dégagez un espace d'au moins 15,2 cm autour des ouvertures de ventilations.

Warnung Um einen Router der switch vor Überhitzung zu schützen, darf dieser nicht in einer Gegend betrieben werden, in der die Umgebungstemperatur das empfohlene Maximum von 40° C überschreitet. Um Lüftungsverschluß zu verhindern, achten Sie darauf, daß mindestens 15,2 cm lichter Raum um die Lüftungsöffnungen herum frei bleibt.

Avvertenza Per evitare il surriscaldamento dei switch, non adoperateli in un locale che ecceda la temperatura ambientale massima di 40° C. Per evitare che la circolazione dell'aria sia impedita, lasciate uno spazio di almeno 15.2 cm di fronte alle aperture delle ventole.

Advarsel Unngå overoppheting av eventuelle rutere i Juniper Networks switch Disse skal ikke brukes på steder der den anbefalte maksimale omgivelsestemperaturen overstiger 40° C (104° F). Sørg for at klaringen rundt lufteåpningene er minst 15,2 cm (6 tommer) for å forhindre nedsatt luftsirkulasjon.

Aviso Para evitar o sobreaquecimento do encaminhador Juniper Networks switch, não utilize este equipamento numa área que exceda a temperatura máxima recomendada de 40° C. Para evitar a restrição à circulação de ar, deixe pelo menos um espaço de 15,2 cm à volta das aberturas de ventilação.

¡Atención! Para impedir que un encaminador de la serie Juniper Networks switch se recaliente, no lo haga funcionar en un área en la que se supere la temperatura ambiente máxima recomendada de 40° C. Para impedir la restricción de la entrada de aire, deje un espacio mínimo de 15,2 cm alrededor de las aperturas para ventilación.

Varning! Förhindra att en Juniper Networks switch överhettas genom att inte använda den i ett område där den maximalt rekommenderade omgivningstemperaturen på 40° C överskrids. Förhindra att luftcirkulationen inskränks genom att se till att det finns fritt utrymme på minst 15,2 cm omkring ventilationsöppningarna.

Product Disposal Warning



WARNING: Disposal of this device must be handled according to all national laws and regulations.

Waarschuwing Dit produkt dient volgens alle landelijke wetten en voorschriften te worden afgedankt.

Varoitus Tämän tuotteen lopullisesta hävittämisestä tulee huolehtia kaikkia valtakunnallisia lakeja ja säännöksiä noudattaen.

Avertissement La mise au rebut définitive de ce produit doit être effectuée conformément à toutes les lois et réglementations en vigueur.

Warnung Dieses Produkt muß den geltenden Gesetzen und Vorschriften entsprechend entsorgt werden.

Avvertenza L'eliminazione finale di questo prodotto deve essere eseguita osservando le normative italiane vigenti in materia

Advarsel Endelig disponering av dette produktet må skje i henhold til nasjonale lover og forskrifter.

Aviso A descartagem final deste produto deverá ser efectuada de acordo com os regulamentos e a legislação nacional.

¡Atención! El desecho final de este producto debe realizarse según todas las leyes y regulaciones nacionales

Varning! Slutlig kassering av denna produkt bör skötas i enlighet med landets alla lagar och föreskrifter.

General Electrical Safety Guidelines and Warnings



WARNING: Certain ports on the device are designed for use as intrabuilding (within-the-building) interfaces only (Type 2 or Type 4 ports as described in *GR-1089-CORE*) and require isolation from the exposed outside plant (OSP) cabling. To comply with NEBS (Network Equipment-Building System) requirements and protect against lightning surges and commercial power disturbances, the intrabuilding ports *must not* be metallically connected to interfaces that connect to the OSP or its wiring. The intrabuilding ports on the device are suitable for connection to intrabuilding or unexposed wiring or cabling only. The addition of primary protectors is not sufficient protection for connecting these interfaces metallically to OSP wiring.

Avertissement Certains ports de l'appareil sont destinés à un usage en intérieur uniquement (ports Type 2 ou Type 4 tels que décrits dans le document *GR-1089-CORE*) et doivent être isolés du câblage de l'installation extérieure exposée. Pour respecter les exigences NEBS et assurer une protection contre la foudre et les perturbations de tension secteur, les ports pour intérieur *ne doivent pas* être raccordés physiquement aux interfaces prévues pour la connexion à l'installation extérieure ou à son câblage. Les ports pour intérieur de l'appareil sont réservés au raccordement de câbles pour intérieur ou non exposés uniquement. L'ajout de protections ne constitue pas une précaution suffisante pour raccorder physiquement ces interfaces au câblage de l'installation extérieure.



CAUTION: Before removing or installing components of a device, connect an electrostatic discharge (ESD) grounding strap to an ESD point and wrap and fasten the other end of the strap around your bare wrist. Failure to use an ESD grounding strap could result in damage to the device.

Attention Avant de retirer ou d'installer des composants d'un appareil, raccordez un bracelet antistatique à un point de décharge électrostatique et fixez le bracelet à votre poignet nu. L'absence de port d'un bracelet antistatique pourrait provoquer des dégâts sur l'appareil.

- Install the device in compliance with the following local, national, and international electrical codes:
  - United States—National Fire Protection Association (NFPA 70), United States National Electrical Code.
  - Other countries—International Electromechanical Commission (IEC) 60364, Part 1 through Part 7.
  - Evaluated to the TN power system.

  - Canada—Canadian Electrical Code, Part 1, CSA C22.1.
  - Suitable for installation in Information Technology Rooms in accordance with Article 645 of the National Electrical Code and NFPA 75.

    Peut être installé dans des salles de matériel de traitement de l'information conformément à l'article 645 du National Electrical Code et à la NFPA 75.

- Locate the emergency power-off switch for the room in which you are working so that if an electrical accident occurs, you can quickly turn off the power.
- Make sure that you clean grounding surface and give them a bright finish before making grounding connections.
- Do not work alone if potentially hazardous conditions exist anywhere in your workspace.
- Never assume that power is disconnected from a circuit. Always check the circuit before starting to work.
- Carefully look for possible hazards in your work area, such as moist floors, ungrounded power extension cords, and missing safety grounds.
- Operate the device within marked electrical ratings and product usage instructions.
- To ensure that the device and peripheral equipment function safely and correctly, use the cables and connectors specified for the attached peripheral equipment, and make certain they are in good condition.

You can remove and replace many device components without powering off or disconnecting power to the device, as detailed elsewhere in the hardware documentation for this device. Never install equipment that appears to be damaged.

Prevention of Electrostatic Discharge Damage

Device components that are shipped in antistatic bags are sensitive to damage from static electricity. Some components can be impaired by voltages as low as 30 V. You can easily generate potentially damaging static voltages whenever you handle plastic or foam packing material or if you move components across plastic or carpets. Observe the following guidelines to minimize the potential for electrostatic discharge (ESD) damage, which can cause intermittent or complete component failures:

- Always use an ESD wrist strap when you are handling components that are subject to ESD damage, and make sure that it is in direct contact with your skin.

If a grounding strap is not available, hold the component in its antistatic bag (see Figure 79 on page 207) in one hand and touch the exposed, bare metal of the device with the other hand immediately before inserting the component into the device.

WARNING: For safety, periodically check the resistance value of the ESD grounding strap. The measurement must be in the range 1 through 10 Mohms.

Avertissement Par mesure de sécurité, vérifiez régulièrement la résistance du bracelet antistatique. Cette valeur doit être comprise entre 1 et 10 mégohms (Mohms).

- When handling any component that is subject to ESD damage and that is removed from the device, make sure the equipment end of your ESD wrist strap is attached to the ESD point on the chassis.

  If no grounding strap is available, touch the exposed, bare metal of the device to ground yourself before handling the component.

- Avoid contact between the component that is subject to ESD damage and your clothing. ESD voltages emitted from clothing can damage components.

- When removing or installing a component that is subject to ESD damage, always place it component-side up on an antistatic surface, in an antistatic card rack, or in an antistatic bag (see Figure 79 on page 207). If you are returning a component, place it in an antistatic bag before packing it.

Figure 79: Placing a Component into an Antistatic Bag

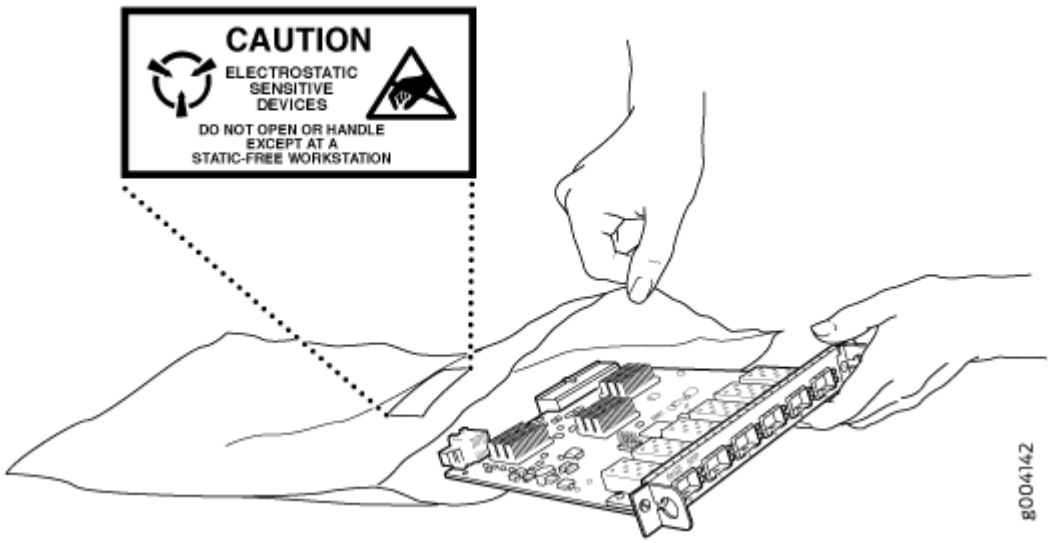

CAUTION: ANSI/TIA/EIA-568 cables such as Category 5e and Category 6 can get electrostatically charged. To dissipate this charge, always ground the cables to a suitable and safe earth ground before connecting them to the system.

Attention Les câbles ANSI/TIA/EIA-568, par exemple Cat 5e et Cat 6, peuvent emmagasiner des charges électrostatiques. Pour évacuer ces charges, reliez toujours les câbles à une prise de terre adaptée avant de les raccorder au système.

Site Electrical Wiring Guidelines

Table 43 on page 208 describes the factors you must consider while planning the electrical wiring at your site.

WARNING: You must provide a properly grounded and shielded environment and use electrical surge-suppression devices.

Avertissement Vous devez établir un environnement protégé et convenablement mis à la terre et utiliser des dispositifs de parasurtension.

Table 43: Site Electrical Wiring Guidelines

Site Wiring Factor	Guidelines
Signaling limitations	If your site experiences any of the following problems, consult experts in electrical surge suppression and shielding: • Improperly installed wires cause radio frequency interference (RFI). • Damage from lightning strikes occurs when wires exceed recommended distances or pass between buildings. • Electromagnetic pulses (EMPs) caused by lightning damage unshielded conductors and electronic devices.

Table 43: Site Electrical Wiring Guidelines *(Continued)*

Site Wiring Factor	Guidelines
Radio frequency interference	To reduce or eliminate RFI from your site wiring, do the following: • Use a twisted-pair cable with a good distribution of grounding conductors. • If you must exceed the recommended distances, use a high-quality twisted-pair cable with one ground conductor for each data signal, when applicable.
Electromagnetic compatibility	If your site is susceptible to problems with electromagnetic compatibility (EMC), particularly from lightning or radio transmitters, seek expert advice. Strong sources of electromagnetic interference (EMI) can cause: • Destruction of the signal drivers and receivers in the device, • Electrical hazards as a result of power surges conducted over the lines into the equipment.

AC Power Electrical Safety Guidelines

The following electrical safety guidelines apply to AC-powered devices:

- Note the following warnings printed on the device:

  "**CAUTION:** THIS UNIT HAS MORE THAN ONE POWER SUPPLY CORD. DISCONNECT ALL POWER SUPPLY CORDS BEFORE SERVICING TO AVOID ELECTRIC SHOCK."

  "**ATTENTION:** CET APPAREIL COMPORTE PLUS D'UN CORDON D'ALIMENTATION. AFIN DE PRÉVENIR LES CHOCS ÉLECTRIQUES, DÉBRANCHER TOUT CORDON D'ALIMENTATION AVANT DE FAIRE LE DÉPANNAGE."

- AC-powered devices are shipped with a three-wire electrical cord with a grounding-type plug that fits only a grounding-type power outlet. Do not circumvent this safety feature. Equipment grounding must comply with local and national electrical codes.

- You must provide an external certified circuit breaker (2-pole circuit breaker or 4-pole circuit breaker based on your device) rated minimum 20 A in the building installation.

- The power cord serves as the main disconnecting device for the AC-powered device. The socket outlet must be near the AC-powered device and be easily accessible.
- For devices that have more than one power supply connection, you must ensure that all power connections are fully disconnected so that power to the device is completely removed to prevent electric shock. To disconnect power, unplug all power cords (one for each power supply).

Power Cable Warning (Japanese)

WARNING: The attached power cable is only for this product. Do not use the cable for another product.

注意

附属の電源コードセットはこの製品専用です。
他の電気機器には使用しないでください。

AC Power Disconnection Warning



WARNING: Before working on the device or near power supplies, unplug all the power cords from an AC-powered device.

Waarschuwing Voordat u aan een frame of in de nabijheid van voedingen werkt, dient u bij wisselstroom toestellen de stekker van het netsnoer uit het stopcontact te halen.

Varoitus Kytke irti vaihtovirtalaitteiden virtajohto, ennen kuin teet mitään asennuspohjalle tai työskentelet virtalähteiden läheisyydessä.

Avertissement Avant de travailler sur un châssis ou à proximité d'une alimentation électrique, débrancher le cordon d'alimentation des unités en courant alternatif.

Warnung Bevor Sie an einem Chassis oder in der Nähe von Netzgeräten arbeiten, ziehen Sie bei Wechselstromeinheiten das Netzkabel ab bzw.

Avvertenza Prima di lavorare su un telaio o intorno ad alimentatori, scollegare il cavo di alimentazione sulle unità CA.

Advarsel Før det utføres arbeid på kabinettet eller det arbeides i nærheten av strømforsyningsenheter, skal strømledningen trekkes ut på vekselstrømsenheter.

Aviso Antes de trabalhar num chassis, ou antes de trabalhar perto de unidades de fornecimento de energia, desligue o cabo de alimentação nas unidades de corrente alternada.

¡Atención! Antes de manipular el chasis de un equipo o trabajar cerca de una fuente de alimentación, desenchufar el cable de alimentación en los equipos de corriente alterna (CA).

Varning! Innan du arbetar med ett chassi eller nära strömförsörjningsenheter skall du för växelströmsenheter dra ur nätsladden.

DC Power Disconnection Warning



WARNING: Before performing any of the DC power procedures, ensure that power is removed from the DC circuit. To ensure that all power is off, locate the circuit breaker on the panel board that services the DC circuit, switch the circuit breaker to the OFF position, and tape the device handle of the circuit breaker in the OFF position.

Waarschuwing Voordat u een van de onderstaande procedures uitvoert, dient u te controleren of de stroom naar het gelijkstroom circuit uitgeschakeld is. Om u ervan te verzekeren dat alle stroom UIT is geschakeld, kiest u op het schakelbord de stroomverbreker die het gelijkstroom circuit bedient, draait de stroomverbreker naar de UIT positie en plakt de schakelaarhendel van de stroomverbreker met plakband in de UIT positie vast.

Varoitus Varmista, että tasavirtapiirissä ei ole virtaa ennen seuraavien toimenpiteiden suorittamista. Varmistaaksesi, että virta on KATKAISTU täysin, paikanna tasavirrasta huolehtivassa kojetaulussa sijaitseva suojakytkin, käännä suojakytkin KATKAISTU-asentoon ja teippaa suojakytkimen varsi niin, että se pysyy KATKAISTU-asennossa.

Avertissement Avant de pratiquer l'une quelconque des procédures ci-dessous, vérifier que le circuit en courant continu n'est plus sous tension. Pour en être sûr, localiser le disjoncteur situé sur le panneau de service du circuit en courant continu, placer le disjoncteur en position fermée (OFF) et, à l'aide d'un ruban adhésif, bloquer la poignée du disjoncteur en position OFF.

Warnung Vor Ausführung der folgenden Vorgänge ist sicherzustellen, daß die Gleichstromschaltung keinen Strom erhält. Um sicherzustellen, daß sämtlicher Strom abgestellt ist, machen Sie auf der Schalttafel den Unterbrecher für die

Gleichstromschaltung ausfindig, stellen Sie den Unterbrecher auf AUS, und kleben Sie den Schaltergriff des Unterbrechers mit Klebeband in der AUS-Stellung fest.

Avvertenza Prima di svolgere una qualsiasi delle procedure seguenti, verificare che il circuito CC non sia alimentato. Per verificare che tutta l'alimentazione sia scollegata (OFF), individuare l'interruttore automatico sul quadro strumenti che alimenta il circuito CC, mettere l'interruttore in posizione OFF e fissarlo con nastro adesivo in tale posizione.

Advarsel Før noen av disse prosedyrene utføres, kontroller at strømmen er frakoblet likestrømkretsen. Sørg for at all strøm er slått AV. Dette gjøres ved å lokalisere strømbryteren på brytertavlen som betjener likestrømkretsen, slå strømbryteren AV og teipe bryterhåndtaket på strømbryteren i AV-stilling.

Aviso Antes de executar um dos seguintes procedimentos, certifique-se que desligou a fonte de alimentação de energia do circuito de corrente contínua. Para se assegurar que toda a corrente foi DESLIGADA, localize o disjuntor no painel que serve o circuito de corrente contínua e coloque-o na posição OFF (Desligado), segurando nessa posição a manivela do interruptor do disjuntor com fita isoladora.

¡Atención! Antes de proceder con los siguientes pasos, comprobar que la alimentación del circuito de corriente continua (CC) esté cortada (OFF). Para asegurarse de que toda la alimentación esté cortada (OFF), localizar el interruptor automático en el panel que alimenta al circuito de corriente continua, cambiar el interruptor automático a la posición de Apagado (OFF), y sujetar con cinta la palanca del interruptor automático en posición de Apagado (OFF).

Varning! Innan du utför någon av följande procedurer måste du kontrollera att strömförsörjningen till likströmskretsen är bruten. Kontrollera att all strömförsörjning är BRUTEN genom att slå AV det överspänningsskydd som skyddar likströmskretsen och tejpa fast överspänningsskyddets omkopplare i FRÅN-läget.

DC Power Grounding Requirements and Warning

An insulated grounding conductor that is identical in size to the grounded and ungrounded branch circuit supply conductors but is identifiable by green and yellow stripes is installed as part of the branch circuit that supplies the device. The grounding conductor is a separately derived system at the supply transformer or motor generator set.



WARNING: When you install the device, the ground connection must always be made first and disconnected last.

Waarschuwing Bij de installatie van het toestel moet de aardverbinding altijd het eerste worden gemaakt en het laatste worden losgemaakt.

Varoitus Laitetta asennettaessa on maahan yhdistäminen aina tehtävä ensiksi ja maadoituksen irti kytkeminen viimeiseksi.

Avertissement Lors de l'installation de l'appareil, la mise à la terre doit toujours être connectée en premier et déconnectée en dernier.

Warnung Der Erdanschluß muß bei der Installation der Einheit immer zuerst hergestellt und zuletzt abgetrennt werden.

Avvertenza In fase di installazione dell'unità, eseguire sempre per primo il collegamento a massa e disconnetterlo per ultimo.

Advarsel Når enheten installeres, må jordledningen alltid tilkobles først og frakobles sist.

Aviso Ao instalar a unidade, a ligação à terra deverá ser sempre a primeira a ser ligada, e a última a ser desligada.

¡Atención! Al instalar el equipo, conectar la tierra la primera y desconectarla la última.

Varning! Vid installation av enheten måste jordledningen alltid anslutas först och kopplas bort sist.

DC Power Wiring Sequence Warning



WARNING: Wire the DC power supply using the appropriate lugs. When connecting power, the proper wiring sequence is ground to ground, +RTN to +RTN, then –48 V to –48 V. When disconnecting power, the proper wiring sequence is –48 V to –48 V, +RTN to +RTN, then ground to ground. Note that the ground wire must always be connected first and disconnected last.

Waarschuwing De juiste bedradingsvolgorde verbonden is aarde naar aarde, +RTN naar +RTN, en –48 V naar – 48 V. De juiste bedradingsvolgorde losgemaakt is en –48 naar –48 V, +RTN naar +RTN, aarde naar aarde.

Varoitus Oikea yhdistettava kytkentajarjestys on maajohto maajohtoon, +RTN varten +RTN, –48 V varten – 48 V. Oikea irrotettava kytkentajarjestys on –48 V varten – 48 V, +RTN varten +RTN, maajohto maajohtoon.

Avertissement Câblez l'approvisionnement d'alimentation CC En utilisant les crochets appropriés à l'extrémité de câblage. En reliant la puissance, l'ordre approprié de câblage est rectifié pour rectifier, +RTN à +RTN, puis –48 V à –48 V. En débranchant la puissance, l'ordre approprié de câblage est –48 V à –48 V, +RTN à +RTN, a alors rectifié pour rectifier. Notez que le fil de masse devrait toujours être relié d'abord et débranché pour la dernière fois. Notez que le fil de masse devrait toujours être relié d'abord et débranché pour la dernière fois.

Warnung Die Stromzufuhr ist nur mit geeigneten Ringösen an das DC Netzteil anzuschliessen. Die richtige Anschlusssequenz ist: Erdanschluss zu Erdanschluss, +RTN zu +RTN und dann -48V zu -48V. Die richtige Sequenz zum Abtrennen der Stromversorgung ist -48V zu -48V, +RTN zu +RTN und dann Erdanschluss zu Erdanschluss. Es ist zu beachten dass der Erdanschluss immer zuerst angeschlossen und als letztes abgetrennt wird.

Avvertenza Mostra la morsettiera dell alimentatore CC. Cablare l'alimentatore CC usando i connettori adatti all'estremità del cablaggio, come illustrato. La corretta sequenza di cablaggio è da massa a massa, da positivo a positivo (da linea ad L) e da negativo a negativo (da neutro a N). Tenere presente che il filo di massa deve sempre venire collegato per primo e scollegato per ultimo.

Advarsel Riktig tilkoples tilkoplingssekvens er jord til jord, +RTN til +RTN, –48 V til – 48 V. Riktig frakoples tilkoplingssekvens er –48 V til – 48 V, +RTN til +RTN, jord til jord.

Aviso Ate con alambre la fuente de potencia cc Usando los terminales apropiados en el extremo del cableado. Al conectar potencia, la secuencia apropiada del cableado se muele para moler, +RTN a +RTN, entonces –48 V a –48 V. Al desconectar potencia, la secuencia apropiada del cableado es –48 V a –48 V, +RTN a +RTN, entonces molió para moler. Observe que el alambre de tierra se debe conectar siempre primero y desconectar por último. Observe que el alambre de tierra se debe conectar siempre primero y desconectar por último.

¡Atención! Wire a fonte de alimentação de DC Usando os talões apropriados nan EXtremidade da fiação. Ao conectar a potência, a seqüência apropriada da fiação é moída para moer, +RTN a +RTN, então –48 V a –48 V. Ao desconectar a potência, a seqüência apropriada da fiação é –48 V a –48 V, +RTN a +RTN, moeu então para moer. Anote que o fio à terra deve sempre ser conectado primeiramente e desconectado por último. Anote que o fio à terra deve sempre ser conectado primeiramente e desconectado por último.

Varning! Korrekt kopplingssekvens ar jord till jord, +RTN till +RTN, –48 V till –48 V. Korrekt kopplas kopplingssekvens ar –48 V till –48 V, +RTN till +RTN, jord till jord.

DC Power Wiring Terminations Warning



WARNING: When stranded wiring is required, use approved wiring terminations, such as closed-loop or spade-type with upturned lugs. These terminations must be the appropriate size for the wires and must clamp both the insulation and conductor.

Waarschuwing Wanneer geslagen bedrading vereist is, dient u bedrading te gebruiken die voorzien is van goedgekeurde aansluitingspunten, zoals het gesloten-lus type of het grijperschop type waarbij de aansluitpunten omhoog wijzen. Deze aansluitpunten dienen de juiste maat voor de draden te hebben en dienen zowel de isolatie als de geleider vast te klemmen.

Varoitus Jos säikeellinen johdin on tarpeen, käytä hyväksyttyä johdinliitäntää, esimerkiksi suljettua silmukkaa tai kourumaista liitäntää, jossa on ylöspäin käännetyt kiinnityskorvat. Tällaisten liitäntöjen tulee olla kooltaan johtimiin sopivia ja niiden tulee puristaa yhteen sekä eristeen että johdinosan.

Avertissement Quand des fils torsadés sont nécessaires, utiliser des douilles terminales homologuées telles que celles à circuit fermé ou du type à plage ouverte avec cosses rebroussées. Ces douilles terminales doivent être de la taille qui convient aux fils et doivent être refermées sur la gaine isolante et sur le conducteur.

Warnung Wenn Litzenverdrahtung erforderlich ist, sind zugelassene Verdrahtungsabschlüsse, z.B. für einen geschlossenen Regelkreis oder gabelförmig, mit nach oben gerichteten Kabelschuhen zu verwenden. Diese Abschlüsse sollten die angemessene Größe für die Drähte haben und sowohl die Isolierung als auch den Leiter festklemmen.

Avvertenza Quando occorre usare trecce, usare connettori omologati, come quelli a occhiello o a forcella con linguette rivolte verso l'alto. I connettori devono avere la misura adatta per il cablaggio e devono serrare sia l'isolante che il conduttore.

Advarsel Hvis det er nødvendig med flertrådede ledninger, brukes godkjente ledningsavslutninger, som for eksempel lukket sløyfe eller spadetype med oppoverbøyde kabelsko. Disse avslutningene skal ha riktig størrelse i forhold til ledningene, og skal klemme sammen både isolasjonen og lederen.

Aviso Quando forem requeridas montagens de instalação eléctrica de cabo torcido, use terminações de cabo aprovadas, tais como, terminações de cabo em circuito fechado e planas com terminais de orelha voltados para cima. Estas terminações de cabo deverão ser do tamanho apropriado para os respectivos cabos, e deverão prender simultaneamente o isolamento e o fio condutor.

¡Atención! Cuando se necesite hilo trenzado, utilizar terminales para cables homologados, tales como las de tipo "bucle cerrado" o "espada", con las lengüetas de conexión vueltas hacia arriba. Estos terminales deberán ser del tamaño apropiado para los cables que se utilicen, y tendrán que sujetar tanto el aislante como el conductor.

Varning! När flertrådiga ledningar krävs måste godkända ledningskontakter användas, t.ex. kabelsko av sluten eller öppen typ med uppåtvänd tapp. Storleken på dessa kontakter måste vara avpassad till ledningarna och måste kunna hålla både isoleringen och ledaren fastklämda.

Multiple Power Supplies Disconnection Warning



WARNING: The network device has more than one power supply connection. All connections must be removed completely to remove power from the unit completely.

Waarschuwing Deze eenheid heeft meer dan één stroomtoevoerverbinding; alle verbindingen moeten volledig worden verwijderd om de stroom van deze eenheid volledig te verwijderen.

Varoitus Tässä laitteessa on useampia virtalähdekytkentöjä. Kaikki kytkennät on irrotettava kokonaan, jotta virta poistettaisiin täysin laitteesta.

Avertissement Cette unité est équipée de plusieurs raccordements d'alimentation. Pour supprimer tout courant électrique de l'unité, tous les cordons d'alimentation doivent être débranchés.

Warnung Diese Einheit verfügt über mehr als einen Stromanschluß; um Strom gänzlich von der Einheit fernzuhalten, müssen alle Stromzufuhren abgetrennt sein.

Avvertenza Questa unità ha più di una connessione per alimentatore elettrico; tutte le connessioni devono essere completamente rimosse per togliere l'elettricità dall'unità.

Advarsel Denne enheten har mer enn én strømtilkobling. Alle tilkoblinger må kobles helt fra for å eliminere strøm fra enheten.

Aviso Este dispositivo possui mais do que uma conexão de fonte de alimentação de energia; para poder remover a fonte de alimentação de energia, deverão ser desconectadas todas as conexões existentes.

¡Atención! Esta unidad tiene más de una conexión de suministros de alimentación; para eliminar la alimentación por completo, deben desconectarse completamente todas las conexiones.

Varning! Denna enhet har mer än en strömförsörjningsanslutning; alla anslutningar måste vara helt avlägsnade innan strömtillförseln till enheten är fullständigt bruten.

TN Power Warning



WARNING: The device is designed to work with a TN power system.
Waarschuwing Het apparaat is ontworpen om te functioneren met TN energiesystemen.

Varoitus Koje on suunniteltu toimimaan TN-sähkövoimajärjestelmien yhteydessä.

Avertissement Ce dispositif a été conçu pour fonctionner avec des systèmes d'alimentation TN.

Warnung Das Gerät ist für die Verwendung mit TN-Stromsystemen ausgelegt.

Avvertenza Il dispositivo è stato progettato per l'uso con sistemi di alimentazione TN.

Advarsel Utstyret er utfomet til bruk med TN-strømsystemer.

Aviso O dispositivo foi criado para operar com sistemas de corrente TN.

¡Atención! El equipo está diseñado para trabajar con sistemas de alimentación tipo TN.

Varning! Enheten är konstruerad för användning tillsammans med elkraftssystem av TN-typ.

Action to Take After an Electrical Accident

If an electrical accident results in an injury, take the following actions in this order:

1. Use caution. Be aware of potentially hazardous conditions that could cause further injury.
2. Disconnect power from the device.
3. If possible, send another person to get medical aid. Otherwise, assess the condition of the victim, and then call for help.

Agency Approvals for ACX7509 Routers

IN THIS SECTION

- Compliance Statement for Argentina | **220**

The ACX7509 routers comply with the following standards:

- Safety
  - CAN/CSA C22.2 No. 62368-1-14, Audio/Video, Information and Communication Technology Equipment – Safety
  - UL 62368-1, Audio/Video, Information and Communication Technology Equipment – Safety
  - IEC 62368-1: 2014 Audio/Video, Information and Communication Technology Equipment – Safety (All country deviations): CB Scheme
  - All 62368-based standards to be evaluated using 5000m altitude
  - EN 60825-1 Safety of Laser Products - Part 1: Equipment classification and requirements.
- EMC
  - EN 55032:2015, Class A
  - CISPR 32:2015, Class A
  - EN 55022:2010, Class A
  - CISPR 22:2008, Class A
  - AS/NZS CISPR 32 Class A Australia/New Zealand Radiated and Conducted Emissions
  - ICES-003 Class A Canada Radiated and Conducted Emissions

    - VCCI- CISPR 32 Class A Japanese Radiated and Conducted Emissions
    - BSMI CNS 13438 and NCC C6357 Taiwan Radiated and Conducted Emissions (at 10 meter)
    - KN32 Korea Radiated and Conducted Emission (at 10 meter) EN 300 386
    - V1.6.1 (2012-09)
    - Class A EN 300386 V2.1.1 (2016-07)
    - Class A TEC/SD/DD/EMC/221/05/OCT-16
    - Class A GR-1089-Core Issue 7: EMC and Electrical Safety for Network Telecommunications Equipment
- Immunity
    - EN 300 386, V1.6.1 (2012-09)
    - EN 300386 V2.1.1 (2016-07)
    - TEC/SD/DD/EMC/221/05/OCT-16
    - EN 55024:2010
    - CISPR 24:2010
    - CISPR 35:2016
    - KN35 Korea Radiated Immunity Characteristics
    - TEC/SD/DD/EMC-221/05/OCT-16 India EMC standard GR-1089-Core Issue 7: EMC and Electrical Safety for Network Telecommunications Equipment
- NEBS
    - GR 63 ISSUE 5.
- ETSI
    - ETSI 300 019 Storage 2.1, Class 1.2
    - ETSI 300 019 Transport 2.2, Class 2.3
    - ETSI 300 019 operational 2.3, Class 3.2
- Energy Efficiency requirements
    - AT&T TEER (ATIS-06000015.03.2013)
    - ECR 3.0.1

- ETSI ES 203 136 (2013-05)
- Verizon TEEER (VZ.TPR.9205 Issue 6)

Compliance Statement for Argentina

EQUIPO DE USO IDÓNEO.

Compliance Statements for NEBS

- The equipment is suitable for installation as part of the Common Bonding Network (CBN).
- The equipment is suitable for installation in locations where the National Electrical Code (NEC) applies.
- The battery return connection is to be treated as an isolated DC return (that is, DC-I), as defined in GR-1089-CORE.
- You must provision a readily accessible device outside of the equipment to disconnect power. The device must also be rated based on local electrical code practice.

Compliance Statements for EMC Requirements

IN THIS SECTION

- Canada | **221**
- European Community | **221**
- Israel | **221**
- Japan | **221**
- United States | **222**

Canada

CAN ICES-3 (A)/NMB-3(A)

European Community

This is a Class A product. In a domestic environment, this product might cause radio interference in which case the user might be required to take adequate measures.

Israel

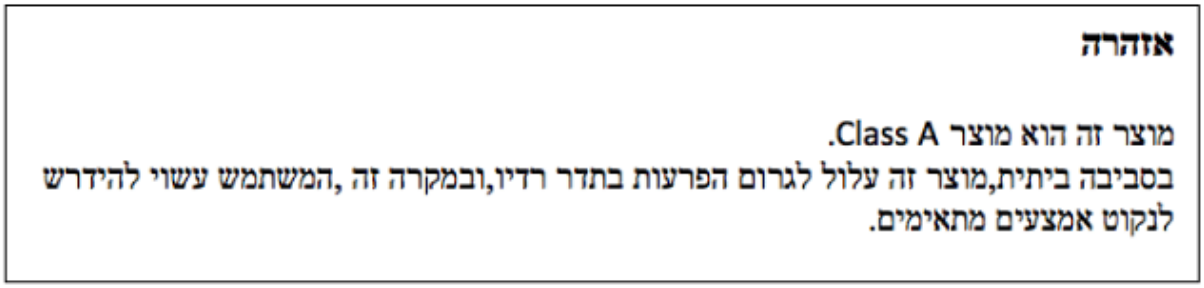

Translation from Hebrew—Warning: This product is Class A. In residential environments, the product might cause radio interference, and in such a situation, the user might be required to take adequate measures.

Japan

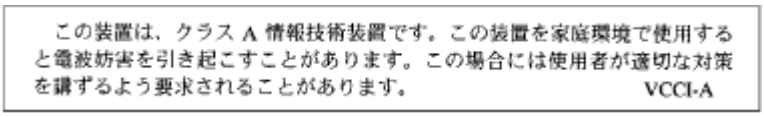

The preceding translates as follows:

This is a Class A product based on the standard of the Voluntary Control Council for Interference by Information Technology Equipment (VCCI). If this product is used near a radio or television receiver in a domestic environment, it might cause radio interference. Install and use the equipment according to the instruction manual. VCCI-A.

United States

The hardware equipment has been tested and found to comply with the limits for a Class A digital device, pursuant to Part 15 of the FCC Rules. These limits are designed to provide reasonable protection against harmful interference when the equipment is operated in a commercial environment. This equipment generates, uses, and can radiate radio frequency energy and, if not installed and used in accordance with the instruction manual, might cause harmful interference to radio communications. Operation of this equipment in a residential area is likely to cause harmful interference in which case the user will be required to correct the interference at his own expense.

Compliance Statements for Environmental Requirements

Batteries in this product are not based on mercury, lead, or cadmium substances. The batteries used in this product are in compliance with EU Directives 91/157/EEC, 93/86/EEC, and 98/101/EEC. The product documentation includes instructional information about the proper method of reclamation and recycling.