Upgrade Guide

NOTE: Use a PH1 screwdriver for the screws specified in this manual.

Removing the compartment cover

A. Remove the screw(s) from the Notebook PC's compartment cover.

B. Loosen the **Pop-open Screw** without removing the screw from the cover.

C. To prevent pulling on and causing damage to the cables connected, slightly lift the cover to reveal the compartment without removing the cover completely.

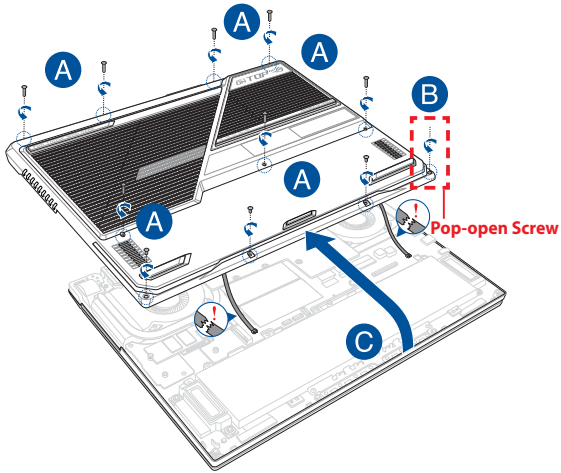

To reattach the compartment cover:

A. Align and reattach the cover of the compartment.

B. Secure the cover using the screw(s) you removed earlier.

C. Tighten the **Pop-open Screw**.

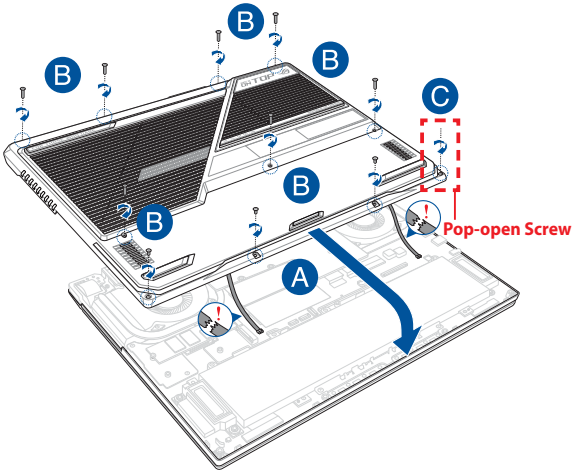

Cover screw map

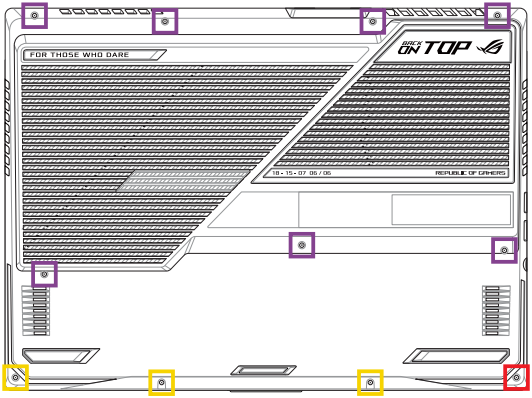

- M2.5 X 9 (7PCS)
- M2.5 X 4.5 (3PCS)
- M2.5 X 5 (1PC Pop-open Screw)

Disconnecting the battery

A. Remove the compartment cover.

> **NOTE:** For more details, refer to the *Removing the compartment cover* section in this manual.

B. Disconnect the cable from the battery connector.

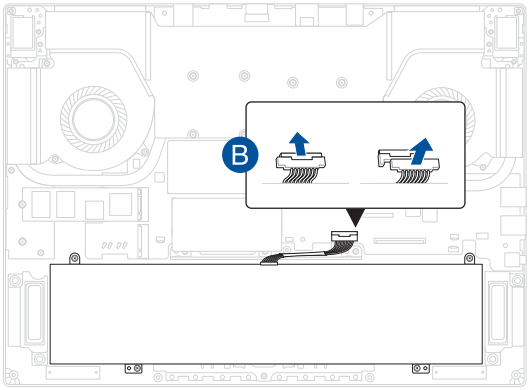

To connect the battery, align and connect the cable to the battery connector before you reattach the compartment cover.

Installing a RAM module

Upgrade the memory capacity of your Notebook PC by installing a RAM (Random Access Memory) module in the memory module compartment. The following steps show you how to install a RAM module into your Notebook PC:

WARNING! Disconnect all the connected peripherals, any telephone or telecommunication lines and power connector (such as external power supply, battery pack, etc.) before removing the compartment cover.

IMPORTANT! Visit an authorized service center or retailer for information on RAM module upgrades for your Notebook PC. Purchase RAM modules from authorized retailers of this Notebook PC to ensure maximum compatibility and reliability.

NOTE:

- The appearance of your Notebook PC's bottom view and RAM module may vary per model but the RAM module installation remains the same.
- It is recommended that you install the RAM module under professional supervision. You may also visit an authorized service center for further assistance.

A. Remove the compartment cover and disconnect the battery.

NOTE: For more details, refer to the *Removing the compartment cover* and *Disconnecting the battery* sections in this manual.

B. Align and insert the RAM module into the RAM module slot.

C. Push down the RAM module until it clicks in place.

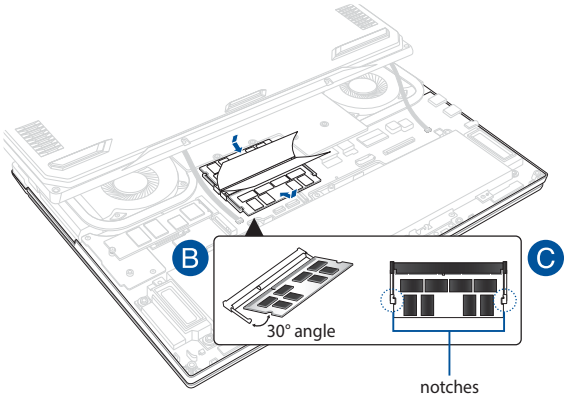

Installing an M.2 card

Refer to the following steps when installing a compatible M.2 card in your Notebook PC:

IMPORTANT! Purchase your M.2 card from authorized retailers of this Notebook PC to ensure maximum compatibility and reliability.

WARNING! Disconnect all the connected peripherals, any telephone or telecommunication lines and power connector (such as external power supply, battery pack, etc.) before removing the compartment cover.

NOTE:

- The appearance of your Notebook PC's bottom view and M.2 card may vary per model but the module installation remains the same.
- It is recommended that you install the M.2 card under professional supervision. You may also visit an authorized service center for further assistance.
- The M.2 2280 slot does not support M.2 SATA SSD.

A. Remove the compartment cover and disconnect the battery.

NOTE: For more details, refer to the *Removing the compartment cover* and *Disconnecting the battery* sections in this manual.

B. Align and insert the M.2 card into its card module slot.

C. Secure the M.2 card in place using the bundled screw(s).

