Spec Sheet

Cisco UCS B200 M5 Blade Server

CISCO SYSTEMS
170 WEST TASMAN DR.
SAN JOSE, CA, 95134
WWW.CISCO.COM

PUBLICATION HISTORY

REV E.18 OCTOBRE 27, 2023

OVERVIEW 3
DETAILED VIEWS 4
BASE SERVER STANDARD CAPABILITIES and FEATURES 5
CONFIGURING the SERVER 7
STEP 1 CHOOSE BASE SERVER SKU 8
UCS B200 Ready2Ship Program 9
STEP 2 CHOOSE CPU(S) 10
STEP 3 CHOOSE MEMORY 15
System Speed 20
STEP 4 CHOOSE MLOM ADAPTER 23
STEP 5 CHOOSE SOFTWARE 25
STEP 6 CHOOSE OPTIONAL REAR MEZZANINE ADAPTERS (VIC, NVMe or GPU) 26
STEP 7 CHOOSE OPTIONAL FRONT MEZZANINE ADAPTER 28
STEP 8 CHOOSE OPTIONAL DRIVES 30
STEP 9 CHOOSE OPTIONAL SECURE DIGITAL CARDS or M.2 DRIVES 35
STEP 10 CHOOSE OPTIONAL TRUSTED PLATFORM MODULE 38
STEP 11 CHOOSE OPTIONAL INTERNAL USB 3.0 DRIVE 39
STEP 12 CHOOSE OPERATING SYSTEM AND VALUE-ADDED SOFTWARE 40
STEP 13 CHOOSE OPTIONAL OPERATING SYSTEM MEDIA KIT 44
STEP 14 CHOOSE SERVICE and SUPPORT LEVEL 45
SUPPLEMENTAL MATERIAL 51
SPARE PARTS 53
UPGRADING or REPLACING CPUs 61
UPGRADING or REPLACING MEMORY 62
DISCONTINUED EOL PRODUCTS 64
TECHNICAL SPECIFICATIONS 73

OVERVIEW

Delivering performance, versatility and density without compromise, the Cisco UCS B200 M5 Blade Server addresses the broadest set of workloads, from IT and web infrastructure through distributed database.

The enterprise-class Cisco UCS B200 M5 blade server extends the capabilities of Cisco's Unified Computing System portfolio in a half-width blade form factor.

The Cisco UCS B200 M5 includes support for the following:

- 2nd Generation Intel® Xeon® Scalable Processors.
- DDR4-2933MHz memory DIMMs.
- 128 GB, 256 GB, 512 GB Intel® Optane™ Persistent Memory Modules (PMem).
- Up to 9 TB of memory is available if the memory slots are populated as follows:
  - 12 x 256 GB DDR4 DIMMs
  - 12 x 512 GB PMem

Figure 1 Cisco UCS B200 M5 Blade Server



DETAILED VIEWS

Blade Server Front View

Figure 2 is a detailed front view of the Cisco UCS B200 M5 Blade Server.

Figure 2 Blade Server Front View

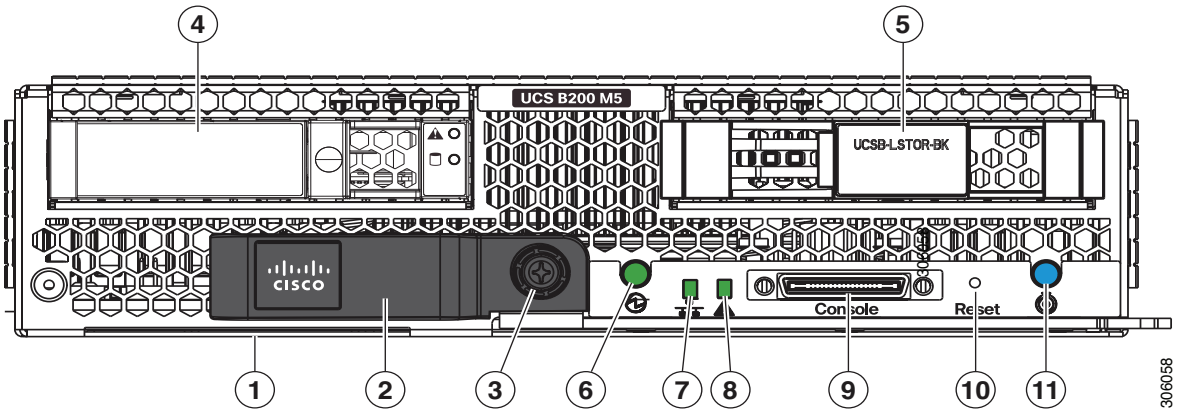

1	Asset pull tag Each server has a plastic tag that pulls out of the front panel. The tag contains the server serial number as well as the product ID (PID) and version ID (VID). The tag also allows you to add your own asset tracking label without interfering with the intended air flow.	**7**	Network link status
2	Blade ejector handle	**8**	Blade health LED
3	Ejector captive screw	**9**	Console connector[1]
4	Drive bay 1	**10**	Reset button access
5	Drive bay 2	**11**	Locator button and LED
6	Power button and LED		

Notes:

1. A KVM I/O cable plugs into the console connector, and can be ordered as a spare. The KVM I/O cable in included with every Cisco UCS 5100 Series blade server chassis accessory kit.

BASE SERVER STANDARD CAPABILITIES and FEATURES

Table 1 lists the capabilities and features of the base server. Details about how to configure the server for a listed feature or capability (for example, number of processors, disk drives, or amount of memory) are provided in *CONFIGURING the SERVER on page 7*

Table 1 Capabilities and Features

Capability/Feature	Description
Chassis	The UCS B200 M5 Blade Server mounts in a Cisco UCS 5108 Series blade server chassis or UCS Mini blade server chassis.
CPU	One or two 2nd Generation Intel® Xeon® scalable family CPUs. Also note that the B200 M5 Blade Server BIOS inherently enables support for Intel Advanced Encryption Standard New Instructions (AES-NI) and does not have an option to disable this feature.
Chipset	Intel® C621 series chipset (Lewisburg)
Memory	■ 24 total DIMM slots ■ Support for Advanced ECC ■ Support for registered ECC DIMMs (RDIMMs) ■ Support for load-reduced DIMMs (LR DIMMs) ■ Support for Persistent DIMMs (PMem) ■ Up to 3072 GB DDR4 DIMM memory capacity (24 x 128 GB DIMMs) ■ Up to 9 TB memory with a mix of DIMMs and PMem • 12 x 256 GB DIMMs • 12 x 512 GB PMem
Modular LOM	One modular LOM (mLOM) connector at the rear of the blade for a Cisco mLOM VIC adapter, which provides Ethernet or Fibre Channel over Ethernet (FCoE) connectivity
Mezzanine Adapters (Rear)	One rear mezzanine connector for various types of Cisco mezzanine adapters ■ Cisco Mezzanine VIC Adapter, or ■ Cisco Mezzanine Port Expander, or ■ Cisco Mezzanine NVMe Storage Adapter, or ■ Cisco Mezzanine nVIDIA P6 GPU (can also be placed in front connector)
Mezzanine Adapters (Front)	One front mezzanine connector for ■ Cisco FlexStorage controller with drive bays, or ■ Cisco Mezzanine nVIDIA P6 GPU (can also be placed in rear connector) **NOTE:** No front GPUs are allowed with CPUs that dissipate greater than 165 W.

Table 1 Capabilities and Features *(continued)*

Capability/Feature	Description
Storage controller	For the front mezzanine connector: ■ Cisco FlexStorage 12G RAID controller with drive bays ■ Cisco FlexStorage 12G RAID controller with 2GB Cache with drive bays ■ Cisco FlexStorage NVMe Passthrough controller with drive bays (you can also have an NVMe storage adapter in the rear mezzanine connector at the same time)
Storage devices	Up to two optional, front-accessible, hot-swappable, 2.5-inch small form factor (SFF) drive slots. Choice of: ■ 10K RPM or 15K RPM hard disk drives (HDD) ■ Enterprise performance or enterprise value solid state drives (SSD) ■ High or medium endurance NVMe Drives Internal mini-storage modules that can accommodate either: ■ Up to two SD modules (32 GB, 64 GB, or 128 GB supporting RAID 1, or ■ Up to two M.2 SATA drives (240 GB or 960 GB) supported by LSI SW RAID Internal UCS 3.0 Port that can accommodate a Cisco 16 GB USB drive
Video	The Cisco Integrated Management Controller (CIMC) provides video using the Matrox G200e video/graphics controller: ■ Integrated 2D graphics core with hardware acceleration ■ 512MB total DDR4 memory, with 16MB dedicated to Matrox video memory ■ Supports display resolutions up to 1920 x 1200 16bpp @ 60Hz ■ High-speed integrated 24-bit RAMDAC ■ Single lane PCI-Express host interface running at Gen 1 speed
Interfaces	One KVM console connector on the front panel
Power subsystem	Integrated in the Cisco UCS 5108 blade server chassis
Fans	Integrated in the Cisco UCS 5108 blade server chassis.
Integrated management processor	The built-in Cisco Integrated Management Controller (CIMC) GUI or CLI interface enables monitoring of server inventory, health, and system event logs
ACPI	Advanced Configuration and Power Interface (ACPI) 4.0 Standard Supported.

CONFIGURING the SERVER

Follow these steps to configure the Cisco UCS B200 M5 Blade Server:

- *STEP 1 CHOOSE BASE SERVER SKU, page 8*
- *STEP 2 CHOOSE CPU(S), page 10*
- *STEP 3 CHOOSE MEMORY, page 15*
- *STEP 4 CHOOSE MLOM ADAPTER, page 23*
- *STEP 5 CHOOSE OPTIONAL REAR MEZZANINE ADAPTERS (VIC, NVMe or GPU), page 25*
- *STEP 6 CHOOSE OPTIONAL FRONT MEZZANINE ADAPTER, page 27*
- *STEP 7 CHOOSE OPTIONAL DRIVES, page 29*
- *STEP 8 CHOOSE SOFTWARE, page 35*
- *STEP 9 CHOOSE OPTIONAL SECURE DIGITAL CARDS or M.2 DRIVES, page 36*
- *STEP 10 CHOOSE OPTIONAL TRUSTED PLATFORM MODULE, page 39*
- *STEP 11 CHOOSE OPTIONAL INTERNAL USB 3.0 DRIVE, page 40*
- *STEP 12 CHOOSE OPERATING SYSTEM AND VALUE-ADDED SOFTWARE, page 41*
- *STEP 13 CHOOSE OPTIONAL OPERATING SYSTEM MEDIA KIT, page 45*
- *STEP 14 CHOOSE SERVICE and SUPPORT LEVEL, page 46*

STEP 1 CHOOSE BASE SERVER SKU

Verify the product ID (PID) of the server as shown in *Table 2*.

Table 2 PID of the Base UCS B200 M5 Blade Server

Product ID (PID)	Description
UCSB-B200-M5	UCS B200 M5 Blade Server without CPU, memory, drive bays, HDD, VIC adapter, or mezzanine adapters (ordered as a blade chassis option)
UCSB-B200-M5-U	UCS B200 M5 Blade Server without CPU, memory, drive bays, HDD, VIC adapter, or mezzanine adapters (ordered standalone)
UCSB-B200-M5-CH	DISTI: UCS B200 M5 Blade Server without CPU, memory, drive bays, HDD, VIC adapter, or mezzanine adapters
UCSB-10-PK-M5BLADE	MULTI: 10-PK B200 M5 W/BLANKING PANELS, PACKAGING KIT

A base Cisco UCS B200 M5 blade server ordered in *Table 2* does not include any components or option They must be selected during product ordering.

Please follow the steps on the following pages to order components such as the following, which are required in a functional blade:

- CPUs
- Memory
- Cisco FlexStorage RAID controller with drive bays (or blank, for no local drive support)
- Drives
- Cisco adapters (such as the VIC 1340,VIC 1380, VIC 1440, VIC 1480, or Port Expander)
- Cisco UCS NVMe Flash Storage Adapters or GPUs.

UCS B200 Ready2Ship Program

5 Ready2Ship Blade Configurations

- Most popular
- Shipped within 5 days
- Standard Pricing

Table 3 shows the UCS B200M5 Ready2Ship Configuration

Table 3 available configuration

Product ID (PID)	Description
UCSB-B200M5-RSV1A	Qty 1 B200 M5 Blade Server with Qty 2 Intel 6252 , Qty 12 64GB Memory, Qty 1 1340 MLOM, Qty 1 M2 240GB HW RAID
UCSB-B200M5-RSV1B	Qty 1 B200 M5 Blade Server with Qty 2 Intel 6226R , Qty 12 64GB Memory, Qty 1 1440 MLOM, Qty 1 M2 240GB HW RAID
UCSB-B200M5-RSV1C	Qty 1 B200 M5 Blade Server with Qty 2 Intel 6248 , Qty 12 32GB Memory, Qty 1 1340 MLOM, Qty 1 M2 240GB HW RAID
UCSB-B200M5-RSV1D	Qty 1 B200 M5 Blade Server with Qty 2 Intel 6254 , Qty 12 64GB Memory, Qty 1 1340 MLOM, Qty 1 M2 240GB HW RAID
UCSB-B200M5-RSV1E	Qty 1 B200 M5 Blade Server with Qty 2 Intel 5218R , Qty 12 64GB Memory, Qty 1 1440 MLOM, Qty 1 M2 240GB HW RAID

NOTE:

- 3-5 days is Business days, does not include delivery time and is based on receipt of final Partner PO; Subject to parts in stock at time of final PO
- Only orderable through Authorized Build To Order (BTO) Distributors – Tech Data US.

STEP 2 CHOOSE CPU(S)

The standard CPU features are:

- 2nd Generation Intel® Xeon® scalable processor family CPUs.
- Intel® C621 series chipset
- Up to 28 cores per processor, for a total of up to 56 cores per server
- Please refer to the notes below on ambient inlet temperature requirements and allowed Mezz Card Configuration due to CPU thermal requirements.

NOTE:

The CPUs designated as Ix2xx are 2nd Generation Intel® Xeon® scalable processor family CPUs.

Select CPUs from *Table 4*.

Table 4 Available CPUs

Product ID (PID)[1]	Clock Freq (GHz)	Power (W)	Cache Size (MB)	Cores	UPI[2] Links (GT/s)	Highest DDR4 DIMM Clock Support (MHz)[3]	Workload
Cisco Recommended Processors [4, 5] (2nd Generation Intel® Xeon® Processors)							
UCS-CPU-I8276	2.2	165	38.50	28	3 x 10.4	2933	Oracle, SAP
UCS-CPU-I8260	2.4	165	35.75	24	3 x 10.4	2933	Microsoft Azure Stack
UCS-CPU-I6262V	1.9	135	33.00	24	3 x 10.4	2400	Virtual Server infrastructure or VSI
UCS-CPU-I6248R	3.0	205	35.75	24	2 x 10.4	2933	
UCS-CPU-I6248	2.5	150	27.50	20	3 x 10.4	2933	VDI, Oracle, SQL, Microsoft Azure Stack
UCS-CPU-I6238R	2.2	165	38.50	28	2 x 10.4	2933	Oracle, SAP (2-Socket TDI only), Microsoft AzureStack
UCS-CPU-I6238	2.1	140	30.25	22	3 x 10.4	2933	SAP
UCS-CPU-I6234	3.3	130	24.75	8	3 x 10.4	2933	Oracle, SAP
UCS-CPU-I6230R	2.1	150	35.75	26	2 x 10.4	2933	Virtual Server Infrastructure, Data Protection, Big Data, Splunk, Microsoft AzureStack
UCS-CPU-I6230	2.1	125	27.50	20	3 x 10.4	2933	Big Data, Virtualization
UCS-CPU-I5220R	2.2	150	35.75	24	2 x 10.4	2666	Virtual Server Infrastructure, Splunk, Microsoft Azure Stack
UCS-CPU-I5220	2.2	125	24.75	18	2 x 10.4	2666	HCI

Table 4 Available CPUs *(continued)*

Product ID (PID)[1]	Clock Freq (GHz)	Power (W)	Cache Size (MB)	Cores	UPI[2] Links (GT/s)	Highest DDR4 DIMM Clock Support (MHz)[3]	Workload
UCS-CPU-I5218R	2.1	125	27.50	20	2 x 10.4	2666	Virtual Server Infrastructure, Data Protection, Big Data, Splunk, Scale-out Object Storage, Microsoft AzureStack
UCS-CPU-I5218	2.3	125	22.00	16	2 x 10.4	2666	Virtualization, Microsoft Azure Stack, Splunk, Data Protection
UCS-CPU-I4216	2.1	100	22.00	16	2 x 9.6	2400	Data Protection, Scale Out Storage
UCS-CPU-I4214R	2.4	100	16.50	12	2 x 9.6	2400	Data Protection, Splunk, Scale-out Object Storage, Microsoft AzureStack
UCS-CPU-I4214	2.2	85	16.50	12	2 x 9.6	2400	Data Protection, Scale Out Storage
UCS-CPU-I4210R	2.4	100	13.75	10	2 x 9.6	2400	Virtual Server Infrastructure, Data Protection, Big Data, Splunk
UCS-CPU-I4210	2.2	85	13.75	10	2 x 9.6	2400	Virtualization, Big Data, Splunk
8000 Series Processor							
UCS-CPU-I8280L	2.7	205	38.50	28	3 x 10.4	2933	2nd Gen Intel® Xeon®
UCS-CPU-I8280	2.7	205	38.50	28	3 x 10.4	2933	2nd Gen Intel® Xeon®
UCS-CPU-I8276L	2.2	165	38.50	28	3 x 10.4	2933	2nd Gen Intel® Xeon®
UCS-CPU-I8276	2.2	165	38.50	28	3 x 10.4	2933	2nd Gen Intel® Xeon®
UCS-CPU-I8270	2.7	205	35.75	26	3 x 10.4	2933	2nd Gen Intel® Xeon®
UCS-CPU-I8268	2.9	205	35.75	24	3 x 10.4	2933	2nd Gen Intel® Xeon®
UCS-CPU-I8260Y	2.4	165	35.75	24/20/16	3 x 10.4	2933	2nd Gen Intel® Xeon®
UCS-CPU-I8260L	2.4	165	35.75	24	3 x 10.4	2933	2nd Gen Intel® Xeon®
UCS-CPU-I8260	2.4	165	35.75	24	3 x 10.4	2933	2nd Gen Intel® Xeon®
UCS-CPU-I8253	2.2	125	22.00	16	3 x 10.4	2933	2nd Gen Intel® Xeon®
6000 Series Processor							
UCS-CPU-I6262V	1.9	135	33.00	24	3 x 10.4	2400	2nd Gen Intel® Xeon®
UCS-CPU-I6258R	2.7	205	35.75	28	2 x 10.4	2933	2nd Gen Intel® Xeon®
UCS-CPU-I6254	3.1	200	24.75	18	3 x 10.4	2933	2nd Gen Intel® Xeon®
UCS-CPU-I6252	2.1	150	35.75	24	3 x 10.4	2933	2nd Gen Intel® Xeon®
UCS-CPU-I6248R	3.0	205	35.75	24	2 x 10.4	2933	2nd Gen Intel® Xeon®

Table 4 Available CPUs *(continued)*

Product ID (PID)[1]	Clock Freq (GHz)	Power (W)	Cache Size (MB)	Cores	UPI[2] Links (GT/s)	Highest DDR4 DIMM Clock Support (MHz)[3]	Workload
UCS-CPU-I6248	2.5	150	27.50	20	3 x 10.4	2933	2nd Gen Intel® Xeon®
UCS-CPU-I6246R	3.4	205	35.75	16	2 x 10.4	2933	2nd Gen Intel® Xeon®
UCS-CPU-I6246	3.3	165	24.75	12	3 x 10.4	2933	2nd Gen Intel® Xeon®
UCS-CPU-I6244	3.6	150	24.75	8	3 x 10.4	2933	2nd Gen Intel® Xeon®
UCS-CPU-I6242R	3.1	205	35.75	20	2 x 10.4	2933	2nd Gen Intel® Xeon®
UCS-CPU-I6242	2.8	150	22.00	16	3 x 10.4	2933	2nd Gen Intel® Xeon®
UCS-CPU-I6240R	2.4	165	35.75	24	2 x 10.4	2933	2nd Gen Intel® Xeon®
UCS-CPU-I6240Y	2.6	150	24.75	18/14/8	3 x 10.4	2933	2nd Gen Intel® Xeon®
UCS-CPU-I6240L	2.6	150	24.75	18	3 x 10.4	2933	2nd Gen Intel® Xeon®
UCS-CPU-I6240	2.6	150	24.75	18	3 x 10.4	2933	2nd Gen Intel® Xeon®
UCS-CPU-I6238R	2.2	165	38.50	28	2 x 10.4	2933	2nd Gen Intel® Xeon®
UCS-CPU-I6238L	2.1	140	30.25	22	3 x 10.4	2933	2nd Gen Intel® Xeon®
UCS-CPU-I6238	2.1	140	30.25	22	3 x 10.4	2933	2nd Gen Intel® Xeon®
UCS-CPU-I6234	3.3	130	24.75	8	3 x 10.4	2933	2nd Gen Intel® Xeon®
UCS-CPU-I6230R	2.1	150	35.75	26	2 x 10.4	2933	2nd Gen Intel® Xeon®
UCS-CPU-I6230N	2.3	125	27.50	20	3 x 10.4	2933	2nd Gen Intel® Xeon®
UCS-CPU-I6230	2.1	125	27.50	20	3 x 10.4	2933	2nd Gen Intel® Xeon®
UCS-CPU-I6226R	2.9	150	22.00	16	2 x 10.4	2933	2nd Gen Intel® Xeon®
UCS-CPU-I6226	2.7	125	19.25	12	3 x 10.4	2933	2nd Gen Intel® Xeon®
UCS-CPU-I6222V	1.8	115	27.50	20	3 x 10.4	2400	2nd Gen Intel® Xeon®
5000 Series Processor							
UCS-CPU-I5222	3.8	125	16.50	4	2 x 10.4	2933	2nd Gen Intel® Xeon®
UCS-CPU-I5220S	2.6	125	19.25	18	2 x 10.4	2666	2nd Gen Intel® Xeon®
UCS-CPU-I5220R	2.2	150	35.75	24	2 x 10.4	2666	2nd Gen Intel® Xeon®
UCS-CPU-I5220	2.2	125	24.75	18	2 x 10.4	2666	2nd Gen Intel® Xeon®
UCS-CPU-I5218R	2.1	125	27.50	20	2 x 10.4	2666	2nd Gen Intel® Xeon®
UCS-CPU-I5218B	2.3	125	22.00	16	2 x 10.4	2933	2nd Gen Intel® Xeon®
UCS-CPU-I5218N	2.3	105	22.00	16	2 x 10.4	2666	2nd Gen Intel® Xeon®
UCS-CPU-I5218	2.3	125	22.00	16	2 x 10.4	2666	2nd Gen Intel® Xeon®
UCS-CPU-I5217	3.0	115	11.00	8	2 x 10.4	2666	2nd Gen Intel® Xeon®
UCS-CPU-I5215L	2.5	85	13.75	10	2 x 10.4	2666	2nd Gen Intel® Xeon®
UCS-CPU-I5215	2.5	85	13.75	10	2 x 10.4	2666	2nd Gen Intel® Xeon®
4000 Series Processor							
UCS-CPU-I4216	2.1	100	22.00	16	2 x 9.6	2400	2nd Gen Intel® Xeon®

Table 4 Available CPUs *(continued)*

Product ID (PID)[1]	Clock Freq (GHz)	Power (W)	Cache Size (MB)	Cores	UPI[2] Links (GT/s)	Highest DDR4 DIMM Clock Support (MHz)[3]	Workload
UCS-CPU-I4215R	3.2	130	11.00	8	2 x 9.6	2400	2nd Gen Intel® Xeon®
UCS-CPU-I4215	2.5	85	11.00	8	2 x 9.6	2400	2nd Gen Intel® Xeon®
UCS-CPU-I4214R	2.2	105	16.75	12/10/8	2 x 9.6	2400	2nd Gen Intel® Xeon®
UCS-CPU-I4214	2.2	85	16.50	12	2 x 9.6	2400	2nd Gen Intel® Xeon®
UCS-CPU-I4210R	2.4	100	13.75	10	2 x 9.6	2400	2nd Gen Intel® Xeon®
UCS-CPU-I4210	2.2	85	13.75	10	2 x 9.6	2400	2nd Gen Intel® Xeon®
UCS-CPU-I4208	2.1	85	11.00	8	2 x 9.6	2400	2nd Gen Intel® Xeon®
3000 Series Processor							
UCS-CPU-I3206R	1.9	85	11.00	8	2 x 9.6	2133	2nd Gen Intel® Xeon®

Notes:

1. For additional details on ambient temperature limitation or configuration restrictions see Table 3a Page on 15
2. UPI = Ultra Path Interconnect
3. If higher or lower speed DIMMs are selected than what is shown in the table for a given CPU, the DIMMs will be clocked at the lowest common denominator of CPU clock and DIMM clock.
4. For details on memory support for processor classes and CPU modes, see ***Memory Support for CPU Classes and CPU Modes on page 53***
5. For 2nd Generation Intel® Xeon® Scalable Processors, UCSM 4.0(4) software release is required.



CAUTION: In *Table 5*, systems configured with the processors shown must adhere to the ambient inlet temperature thresholds specified. If not, a fan fault or executing workloads with extensive use of heavy instructions sets such as Intel® Advanced Vector Extensions 512 (Intel® AVX-512) may assert thermal and/or performance faults with an associated event recorded in the System Event Log (SEL). *Table 5* lists ambient temperature limitations below 35° C (95° F) and configuration restrictions to ensure proper cooling and avoid excessive processor throttling, which may impact system performance.

Table 5 Ambient Temperature and Configuration Restrictions

Processor Thermal Design Power (TDP)	CPU PID	Blade Slot	Ambient Temperature Limitation	Configuration Restriction
Any Y or N SKUs	UCS-CPU-I8260Y UCS-CPU-I6240Y UCS-CPU-I6230N	Any	32°C (90° F)	Front Mezzanine GPU
200 W or 205 W	UCS-CPU-I8280L UCS-CPU-I8280 UCS-CPU-I8270 UCS-CPU-I8268 UCS-CPU-8180M UCS-CPU-8180 UCS-CPU-8168 UCS-CPU-I6254 UCS-CPU-6154	Any		
Frequency optimized 150/165/125 W	UCS-CPU-I6246 UCS-CPU-I6244 UCS-CPU-I5222	Any		
205W R SKUs	UCS-CPU-I6258R UCS-CPU-I6248R UCS-CPU-6246R UCS-CPU-6242R	1 through 7	25° C (77° F)	
	UCS-CPU-I6258R	8		
	UCS-CPU-I6248R UCS-CPU-6246R UCS-CPU-6242R	8	22° C (72° F)	

Supported Configurations

(1) One-CPU Configuration

— Choose one CPU from any one of the rows of *Table 4 Available CPUs, page 10*

(2) Two-CPU Configuration

— Choose two identical CPUs from any one of the rows of *Table 4 Available CPUs, page 10*

NOTE: See *CHOOSE MEMORY on page 15* for details on the compatibility of CPUs and DIMM speeds.

STEP 3 CHOOSE MEMORY

The available memory for the B200 M5 is as follows:

- Clock speed: Up to 2933 MHz; See available CPUs and their associated DDR4 DIMM maximum clock support in ***Table 4***.
- Rank per DIMM: 1, 2, 4, or 8
- Operational voltage: 1.2 V
- Registered ECC DDR4 DIMMS (RDIMMs), Load-reduced DIMMs (LRDIMMs), or Intel® Optane™ Persistent Memory Modules (PMem)

Memory is organized with six memory channels per CPU, with up to two DIMMs per channel, as shown in ***Figure 3***.

Figure 3 B200 M5 Memory Organization

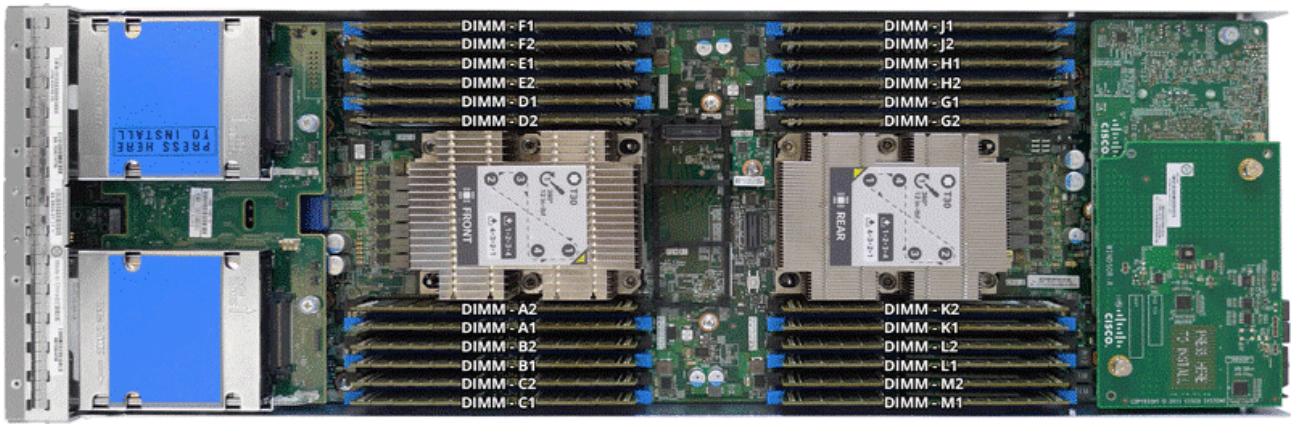

24 DIMMs, 6 Memory channels per CPU, up to 2 DIMMs per channel

Choose DIMMs and Memory Mirroring

Select the memory configuration and whether or not you want the memory mirroring option. The available memory DIMMs and mirroring option are listed in *Table 6*.

NOTE: When memory mirroring is enabled, the memory subsystem simultaneously writes identical data to two channels. If a memory read from one of the channels returns incorrect data due to an uncorrectable memory error, the system automatically retrieves the data from the other channel. A transient or soft error in one channel does not affect the mirrored data, and operation continues unless there is a simultaneous error in exactly the same location on a DIMM and its mirrored DIMM. Memory mirroring reduces the amount of memory available to the operating system by 50% because only one of the two populated channels provides data.

Table 6 Available DDR4 DIMMs

Product ID (PID)	PID Description	Voltage	Ranks /DIMM
UCS-ML-256G8RT-H	256 GB DDR4-2933MHz LRDIMM/8Rx4/1.2v	1.2 V	8
UCS-ML-128G4RW[1]	128GB DDR4-3200MHz LRDIMM 4Rx4 (16Gb)	1.2 V	1
UCS-MR-X64G2RW[1]	64GB DDR4-3200MHz RDIMM 2Rx4 (16Gb)	1.2 V	1
UCS-MR-X32G2RW[1]	32GB DDR4-3200MHz RDIMM 2Rx4 (8Gb)	1.2 V	1
UCS-MR-X16G1RW[1]	16GB DDR4-3200MHz RDIMM 1Rx4 (8Gb)	1.2 V	1
Intel® Optane™ Persistent Memory Product			
UCS-MP-128GS-A0	Intel® Optane™ Persistent Memory, 128GB, 2666 MHz		
UCS-MP-256GS-A0	Intel® Optane™ Persistent Memory, 256GB, 2666 MHz		
UCS-MP-512GS-A0	Intel® Optane™ Persistent Memory, 512GB, 2666 MHz		
Intel® Optane™ Persistent Memory Product Operational Modes			
UCS-DCPMM-AD	App Direct Mode		
UCS-DCPMM-MM	Memory Mode		
Memory Mirroring Option			
N01-MMIRROR	Memory mirroring option		

Notes:

1. DDR4-3200MHz replacement part numbers will operate at the maximum speed of the Intel 2nd generation Xeon Scalable processor memory interface, ranging from 2133 MHz to 2933 MHz.

NOTE: (1) Cisco doesn't support a Load Reduce DIMM (LRDIMM) 64GB Memory PID as a replacement PID of existing UCS-ML-x64G4RT-H and recommends migrating to the Registered DIMM (RDIMM) instead, delivering the best balance in performance and price.

Approved Configurations

(1) 1-CPU configuration without memory mirroring:

- Select from 1 to 12 DIMMs.

CPU 1 DIMM Placement in Channels (for identically ranked DIMMs)	
1	(A1)
2	(A1, B1)
3	(A1, B1, C1)
4	(A1, B1); (D1, E1)
6	(A1, B1); (C1, D1); (E1, F1)
8	(A1, B1); (D1, E1); (A2, B2); (D2, E2)
12	(A1, B1); (C1, D1); (E1, F1); (A2, B2); (C2, D2); (E2, F2)

(2) 1-CPU configuration with memory mirroring:

- Select 4, 6, 8, or 12 identical DIMMs. The DIMMs will be placed by the factory as shown in the following table.

CPU 1 DIMM Placement in Channels (for identical ranked DIMMs)	
4	(A1, B1); (D1, E1)
6	(A1, B1, C1); (D1, E1, F1)
8	(A1, A2, B1, B2); (D1, D2, E1, E2)
12	(A1, A2, B1, B2, C1, C2); (D1, D2, E1, E2, F1, F2)

- Select the memory mirroring option (N01-MMIRROR) as shown in *Table 6 on page 16*.

(3) 2-CPU configuration without memory mirroring:

- Select from 1 to 12 DIMMs per CPU.

	CPU 1 DIMM Placement in Channels (for identical ranked DIMMs) CPU 1	CPU 2 DIMM Placement in Channels (for identical ranked DIMMs) CPU 2
1	(A1)	(G1)
2	(A1, B1)	(G1, H1)
3	(A1, B1, C1)	(G1, H1, J1)
4	(A1, B1); (D1, E1)	(G1, H1); (K1, L1)
6	(A1, B1); (C1, D1); (E1, F1)	(G1, H1); (J1, K1); (L1, M1)
8	(A1, B1); (D1, E1); (A2, B2); (D2, E2)	(G1, H1); (K1, L1); (G2, H2); (K2, L2)
12	(A1, B1); (C1, D1); (E1, F1); (A2, B2); (C2, D2); (E2, F2)	(G1, H1); (J1, K1); (L1, M1); (G2, H2); (J2, K2); (L2, M2)

(4) 2-CPU configuration with memory mirroring:

- Select 8,12 16, or 24 identical DIMMs per CPU. The DIMMs will be placed by the factory as shown in the following table.

	CPU 1 DIMM Placement in Channels (for identical ranked DIMMs) CPU 1	CPU 2 DIMM Placement in Channels (for identical ranked DIMMs) CPU 2
8	(A1,B1); (D1,E1)	(G1, H1); (K1, L1)
12	(A1, B1, C1); (D1, E1, F1)	(G1, H1, J1); (K1, L1, M1)
16	(A1, A2, B1, B2); (D1, D2, E1, E2)	(G1, G2, H1, H2); (K1, K2, L1, L2)
24	(A1, A2, B1, B2, C1, C2); (D1, D2, E1, E2, F1, F2)	(G1, G2, H1, H2, J1, J2); (K1, K2, L1, L2, M1, M2)

- Select the memory mirroring option (N01-MMIRROR) as shown in *Table 6 on page 16*.

NOTE:

- System performance is optimized when the DIMM type and quantity are equal for both CPUs, and when all channels are filled equally across the CPUs in the server.
- DIMM mixing is not allowed when PMem are installed; in these cases, all DIMMs must be the same type and size.

System Speed

Memory will operate at the maximum speed of the Intel Xeon Scalable processor memory controller, ranging from 2133 MHz to 2933 MHz for M5 servers. Check CPU specifications for supported speeds



NOTE: Detailed mixing DIMM configurations are described in Cisco UCS **Cisco UCS C220/C240/B200 M5 Memory Guide**

See *Table 8* for PMem memory modes.

Table 7 Intel® Optane™ Persistent Memory Modes

Intel® Persistent Memory Modes	
App Direct Mode:	PMem operates as a solid-state disk storage device. Data is saved and is non-volatile. Both PMem and DIMM capacity counts towards CPU tiering (both PMem and DIMM capacities count towards the CPU capacity limit)
Memory Mode:[1]	PMem operates as a 100% memory module. Data is volatile and DRAM acts as a cache for PMem. Only PMem capacity counts towards CPU tiering (only the PMem capacity counts towards the CPU capacity limit). This is the factory default mode.
Mix Mode:	DRAM as cache. Only PMem capacity counts towards CPU tiering (only the PMem capacity counts towards the CPU capacity limit).

Notes:

1. For Memory Mode, the Intel-recommended DIMM to PMem capacity ratio in the same CPU channel is from 1:2 to 1:16. So if you use a 128 GB DIMM in a channel, you could use a 512 GB PMem for a 1:4 capacity ratio. If you use a 32 GB DIMM in a channel, you could use a 512 GB PMem for a 1:16 capacity ratio. There are several other combinations possible

See *Table 9* for how to populate combinations of DIMMs and PMem.

Table 8 2nd Generation Intel® Xeon® Scalable Processor DIMM and PMem[1] Physical Configurations (dual socket)

DIMM to PMem Count	CPU 1											
	iMC1						iMC0					
	Channel 2		Channel 1		Channel 0		Channel 2		Channel 1		Channel 0	
	F2	F1	E2	E1	D2	D1	C2	C1	B2	B1	A2	A1
6 to 2		DIMM		DIMM	PMem	DIMM		DIMM		DIMM	PMem	DIMM
6 to 4		DIMM	PMem	DIMM	PMem	DIMM		DIMM	PMem	DIMM	PMem	DIMM
6 to 6	PMem	DIMM	PMem	DIMM	PMem	DIMM	PMem	DIMM	PMem	DIMM	PMem	DIMM
DIMM to PMem Count	**CPU 2**											
	iMC1						iMC0					
	Channel 2		Channel 1		Channel 0		Channel 2		Channel 1		Channel 0	
	M2	M1	L2	L1	K2	K1	J2	J1	H2	H1	G2	G1
6 to 2		DIMM		DIMM	PMem	DIMM		DIMM		DIMM	PMem	DIMM
6 to 4		DIMM	PMem	DIMM	PMem	DIMM		DIMM	PMem	DIMM	PMem	DIMM
6 to 6	PMem	DIMM	PMem	DIMM	PMem	DIMM	PMem	DIMM	PMem	DIMM	PMem	DIMM

Notes:

1. All systems must be fully populated with two CPUs when using PMem at this time.

NOTE: There are three possible memory configurations for each CPU when combining DIMMs and PMem, and the configurations must be the same for each CPU:

- 6 DIMMs and 2 PMem, or
- 6 DIMMs and 4 PMem, or
- 6 DIMMs and 6 PMem

For detailed Intel PMem configurations, refer to

Cisco UCS B200 M5 Server Installation Guide

For detailed DIMM/PMem informations, refer to

Cisco UCS C220/C240/B200 M5 Memory Guide

STEP 4 CHOOSE MLOM ADAPTER

The UCS B200 M5 must be ordered with a Cisco VIC mLOM Adapter. The adapter can operate in a single-CPU or dual-CPU configuration. *Table 11* shows available mLOM adapter choices.

Table 9 mLOM Adapters

Product ID (PID)	Description	Connection type
UCSB-MLOM-40G-04	Cisco UCS VIC 1440 modular LOM for blade servers	mLOM
UCSB-MLOM-40G-03	Cisco UCS VIC 1340 modular LOM for blade servers	mLOM

Table 10 Aggregate Bandwidth with mLOM Only configuration

mLOM Only	Fabrics Extenders in UCS 5108 blade chassis Aggregate Bandwidth (Gb/s)				Fabric Interconnects Support					
	2x 2408	2x 2304V2	2x 2208XP	2x 2204XP	2 x 62xx	2 x 6324	2 x 6332	2 x 6332-16UP	2 x 64xx	2 x 6536
VIC 1440 mLOM	40[1]	40[1]	40[1]	20	Yes	Yes (20 Gb/s)	Yes	Yes	Yes	Yes
VIC 1340 mLOM	40[1]	40[1]	40[1]	20	Yes	Yes (20 Gb/s)	Yes	Yes	Yes	Yes

Notes:

1. These configurations implement two 2x10 Gbps port-channels

Cisco developed 1300 and 1400 Series Virtual Interface Cards (VICs) to provide flexibility to create multiple NIC and HBA devices.The VIC features are listed here:

- VICs include enhancements including network overlay offload support.
- Two Converged Network Adapter (CNA) ports, supporting both Ethernet and FCoE
- Delivers up to 80 Gbps total I/O throughput to the server
- VIC supports either max dual 4x10Gbps Unified I/O ports or 2x40 (native) Gbps Unified I/O ports
- Supports up to 256 fully functional unique and independent PCIe adapters and interfaces
- Provides virtual machine visibility from the physical network and a consistent network operations model for physical and virtual servers
- Supports customer requirements for a wide range of operating systems and hypervisors



NOTE: The mLOM VIC on the UCS B200 M5 enables connectivity to the Fabric Interconnect either through the Fabric Extender (FEX) or directly using the UCS 6324 Fabric Connector (UCS Mini) on the UCS 5108 Blade Chassis.

The supported Fabric Extenders for the B200 M5 blades are:

- Cisco UCS 2408 Fabric Extender
- Cisco UCS 2208XP Fabric Extender
- Cisco UCS 2204XP Fabric Extender
- Cisco UCS 2304V2 Fabric Extender

The supported Fabric Interconnects for the B200 M5 blades are:

- Cisco UCS 6248UP Fabric Interconnect
- Cisco UCS 6296UP Fabric Interconnect
- Cisco UCS 6332 Fabric Interconnect
- Cisco UCS 6332-16UP Fabric Interconnect
- Cisco UCS 6454 Fabric Interconnect
- Cisco UCS 64108 Fabric Interconnect
- Cisco UCS 6536 Fabric Interconnect.



NOTE: The recommended UCS Manager (UCSM) release for the B200 M5 is UCSM 3.2(2), due to support of higher wattage CPUs. The Cisco UCS 64xx Fabric Interconnect and/or VIC 1440 requires UCSM 4.0(1) or greater. The Cisco UCS 6536 Fabric Interconnect and/or VIC 1440 is supported only in Intersight Managed Mode from 4.2(2) or greater, The UCS 6536 Fabric Interconnect from 4.2(3) UCS release enabled the following additional support - UCSM support, IOM 2304 support in IMM/UCSM, VIC 1300 series support in IMM/UCSM and Nexus FEX 2348UPQ in UCSM. Cisco UCS M4 B-series and C-series servers with UCS 6536 Fabric Interconnect are supported only in UCSM.

STEP 5 CHOOSE OPTIONAL REAR MEZZANINE ADAPTERS (VIC, NVMe or GPU)

The UCS B200 M5 has one rear mezzanine adapter connector. The UCS B200 M5 can be ordered with or without a rear mezzanine adapter. Refer to *Table 12 Available Rear Mezzanine Adapters* for supported adapters.

Table 11 Available Rear Mezzanine Adapters

Product ID(PID)	PID Description	CPUs Required	Connector Type
Port Expander Card for VIC This is a hardware option to enable an additional 4 ports of the VIC 1340, bringing the total capability of the VIC 1340 to a dual native 40G interface or a dual 4 x 10 GbE port-channeled interface, respectively.			
UCSB-MLOM-PT-01	Cisco UCS Port Expander Card for VIC	1 or 2 CPUs	Rear Mezzanine
Cisco VIC Card			
UCSB-VIC-M84-4P	Cisco UCS VIC 1480 mezzanine adapter	2 CPUs required	Rear Mezzanine
UCSB-VIC-M83-8P	Cisco UCS VIC 1380 mezzanine adapter	2 CPUs required	Rear Mezzanine

Supported Configurations

- Requires an mLOM (either VIC 1340 or VIC 1440)
- You cannot mix a 1340 with a 1480 or a 1440 and a 1380)

See *Table 13* for aggregate bandwidths with various rear mezzanine cards installed.

Table 12 Aggregate Bandwidth with Rear Mezzanine Cards Installed

Rear Mezz Adapter	IO Modules in UCS5108 blade chassis Aggregate Bandwidth (Gb/s)				Fabric Interconnects Support					
	2x 2408	2x 2304V2	2x 2208XP	2x 2204XP	2 x 62xx	2 x 6324	2 x 6332	2 x 6332-16UP	2 x 64xx	2 x 6536[7]
Port Expander+ VIC 1340	80[2]	80[1]	80[2]	40[3]	Yes	Yes (40Gbps)	Yes	Yes	Yes	Yes
Port Expander + VIC 1440	80[4]	80[1,5]	40[3]	20	No	Yes (20Gbps)	Yes	Yes	Yes	Yes
VIC 1380 mezz	80[6]	80[6]	80[6]	40	Yes	Yes (40Gbps)	Yes	Yes	Yes	Yes
VIC 1480 mezz	80[6]	80[6]	80[6]	40	Yes	Yes (40Gbps)	Yes	Yes	Yes	Yes
Flash Card	40[3]	40[3]	40[3]	20	Yes	Yes (20Gbps)	Yes	Yes	Yes	Yes
GPU	40[3]	40[3]	40[3]	20	Yes	Yes (20Gbps)	Yes	Yes	Yes	Yes

Notes:

1. Uses a dual native 40G interface
2. Two 4x10Gbps port-channeled
3. Two 2x10Gbps port-channeled
4. Supported starting with UCSM 4.1(2). The maximum single-flow is 25 Gbps with an aggregate of 40 Gbps. To avoid IOM/Fabric Extender transient drops due to a speed mismatch of 40 Gbps towards the server and 25 Gbps towards the fabric interconnect (FI), vNIC rate-limiting to 25 Gbps is recommended.
5. If operating in 4x10 mode, bandwidth drops down to 40Gbps (two 2x10 G port-channeled)
6. Four 2x10 Gbps port-channeled
7. The Cisco UCS 6536 Fabric Interconnect and/or VIC 1440 is supported only in Intersight Managed Mode from 4.2(2) or greater. The UCS 6536 Fabric Interconnect from 4.2(3) UCS release enabled the following additional support - UCSM support, IOM 2304 support in IMM/UCSM, VIC 1300 series support in IMM/UCSM and Nexus FEX 2348UPQ in UCSM. Cisco UCS M4 B-series and C-series servers with UCS 6536 Fabric Interconnect are supported only in UCSM.

STEP 6 CHOOSE OPTIONAL FRONT MEZZANINE ADAPTER

The UCS B200 M5 has one front mezzanine connector that can accommodate a storage controller with bays for NVMe drives or a GPU. The UCS B200 M5 can be ordered with or without the front mezzanine adapter. Refer to *Table 14 Available Front Mezzanine Adapters*.

NOTE: A front GPU cannot be used with CPUs that dissipate greater than 165 W.

Table 13 Available Front Mezzanine Adapters

Product ID(PID)	PID Description	Connector Type
Storage Controller[1] (required for installing local drives in the UCS B200 M5		
UCSB-MRAID12G[2],[3]	Cisco FlexStorage 12G SAS RAID controller with drive bays	Front Mezzanine
UCSB-MRAID12G-HE[4],[3]	Cisco FlexStorage 12G SAS RAID controller with 2 GB flash-backed write cache with drive bays	Front Mezzanine
UCSB-LSTOR-PT[5]	Cisco FlexStorage NVME Passthrough module with HDD cage	Front Mezzanine
UCSB-LSTOR-BK[6]	Cisco FlexStorage blanking panel without controller or drive bays	Drive Blank

Notes:

1. A Storage Controller is required for installing local drives (HDD, SSD, NVMe) on the B200 M5.
2. For hard disk drives (HDDs) or solid-state drives (SSDs), a Cisco FlexStorage 12G SAS RAID Controller is required.
3. The Cisco FlexStorage 12G SAS RAID Controller is based on the LSI 3108 ROC and runs the iMegaRAID software stack. It provides 12 Gbps RAID functionality for SAS/SATA SSD/HDD and has RAID 0, 1 and JBOD support.If supercapacitor needs to be replaced, it can be done so by ordering UCSB-MRAID-SC=. See Installation Document for instructions.
4. The Cisco FlexStorage 12G SAS RAID controller with 2 GB Flash-backed write cache is based on the LSI 3108 ROC and runs the LSI MegaRAID software stack. It provides 12 Gbps RAID Functionality for SAS/SATA HDD/SSD and has RAID 0, 1, 5 and 6 Support. If supercapacitor needs to be replaced, it can be done so by ordering UCSB-MRAID-SC=. See Installation Document for instructions

   The flash-backed write cache provides RAID controller cache protection using NAND flash memory and a supercapacitor. In the event of a power or server failure, cached data is automatically transferred from the RAID controller DRAM write cache to flash. Once power is restored, the data in the NAND flash is copied back into the DRAM write cache until it can be flushed to the disk drives.
5. For NVMe, the Cisco FlexStorage NVMe Passthrough module is required.
6. For servers that do not need local storage, and where no storage controllers are included, storage blanking panels are auto-included as a part of the ordering configuration rules. In order for the UCS B200 M5 to function properly and not overheat, drive blanks must be installed if no storage controller or GPU is used.

STEP 7 CHOOSE OPTIONAL DRIVES

The UCS B200 M5 can be ordered with or without drives. The standard drive features are:

- 2.5-inch small form factor
- Hot-pluggable
- Sled-mounted
- The B200 M5 supports hard disk drives (HDD), Solid State Drives (SSD) or Non-Volatile Memory Express (NVMe) Drives
- One or two drives can be selected
- Drives always require one storage controller listed in *Table 14 Available Front Mezzanine Adapters, page 27*.

Select one or two drives from the list of supported drives available in *Table 15*.

Table 14 Available Drive Options

Product ID (PID)	Description	Drive Type	Speed	Performance/ Endurance /Value	Size
HDD[1]					
UCS-HD900G15K12G	900 GB 12G SAS 15K RPM SFF HDD	SAS	15K RPM	N/A	900 GB
UCS-HD600G15K12G	600 GB 12G SAS 15K RPM SFF HDD	SAS	15K RPM	N/A	600 GB
UCS-HD300G15K12G	300 GB 12G SAS 15K RPM SFF HDD	SAS	15K RPM	N/A	300 GB
UCS-HD24TB10KS4K	2.4 TB 12G SAS 10K RPM SFF HDD (4K)[2]	SAS	10K RPM	N/A	2400 GB
UCS-HD18TB10KS4K	1.8 TB 12G SAS 10K RPM SFF HDD (4K)[2]	SAS	10K RPM	N/A	1800 GB
UCS-HD12TB10K12G	1.2 TB 12G SAS 10K RPM SFF HDD	SAS	10K RPM	N/A	1200 GB
UCS-HD600G10K12G	600 GB 12G SAS 10K RPM SFF HDD	SAS	10K RPM	N/A	600 GB
UCS-HD300G10K12G	300 GB 12G SAS 10K RPM SFF HDD	SAS	10K RPM	N/A	300 GB
SSD[1]					
Enterprise Performance (high endurance, supports up to 10X or 3X DWPD (drive writes per day))					
UCS-SD800GKB3X-EP	800GB 2.5in Enterprise Performance 12G SAS SSD(3X endurance)	SAS	12G	Ent. Perf 3X	800 GB
UCS-SD16TKB3X-EP	1.6TB 2.5in Enterprise Performance 12G SAS SSD(3X endurance)	SAS	12G	Ent. Perf 3X	1600 GB
UCS-SD32TKB3X-EP	3.2TB 2.5in Enterprise Performance 12G SAS SSD(3X endurance)	SAS	12G	Ent. Perf 3X	3200 GB
UCS-SD480GIS3-EP	480 GB 2.5in Enterprise performance 6G SATA SSD(3X endurance)	SATA	6G	Ent. Perf 3X	480 GB

Table 14 Available Drive Options *(continued)*

Product ID (PID)	Description	Drive Type	Speed	Performance/ Endurance /Value	Size
UCS-SD960GIS3-EP	960 GB 2.5in Enterprise performance 6G SATA SSD(3X endurance	SATA	6G	Ent. Perf 3X	960 GB
UCS-SD19TIS3-EP	1.9 TB 2.5in Enterprise performance 6G SATA SSD(3X endurance)	SATA	6G	Ent. Perf 3X	1900 GB
UCS-SD19TBMB3X-EP	1.9TB 2.5in Enterprise performance 6GSATA SSD(3X endurance)	SATA	6G	Ent. Perf 3X	1900 GB
UCS-SD480GBMB3XEP	480GB 2.5in Enterprise performance 6GSATA SSD(3X endurance)	SATA	6G	Ent. Perf 3X	480 GB
UCS-SD960GBMB3XEP	960GB 2.5in Enterprise performance 6GSATA SSD(3X endurance)	SATA	6G	Ent. Perf 3X	960 GB
Enterprise Value SSDs (Low endurance, supports up to 1X DWPD (drive writes per day))					
UCS-SD960GKB1X-EV	960GB 2.5 inch Enterprise Value 12G SAS SSD	SAS	12G	Ent. Value	960 GB
UCS-SD19TKB1X-EV	1.9TB 2.5 inch Enterprise Value 12G SAS SSD	SAS	12G	Ent. Value	1900 GB
UCS-SD38TKB1X-EV	3.8TB 2.5 inch Enterprise Value 12G SAS SSD	SAS	12G	Ent. Value	3800 GB
UCS-SD76TKB1X-EV	7.6TB 2.5 inch Enterprise Value 12G SAS SSD	SAS	12G	Ent. Value	7600 GB
UCS-SD15TKB1X-EV	15.3TB 2.5 inch Enterprise Value 12G SAS SSD	SAS	12G	Ent. Value	15300 GB
UCS-SD38TBKS4-EV	3.8 TB 2.5 inch Enterprise Value 6G SATA SSD (Samsung PM863A/PM883)	SATA	6G	Ent. Value	3800 GB
UCS-SD120GBMS4-EV	120 GB 2.5 inch Enterprise Value 6G SATA SSD (Micron 5100/5200)	SATA	6G	Ent. Value	120 GB
UCS-SD480GBIS6-EV	480 GB 2.5 inch Enterprise Value 6G SATA SSD (Intel S4500/S4150)	SATA	6G	Ent. Value	480 GB
UCS-SD960GBIS6-EV	960 GB 2.5 inch Enterprise Value 6G SATA SSD (Intel S4500/S4150)	SATA	6G	Ent. Value	960 GB
UCS-SD38TBIS6-EV	3.8 TB 2.5 inch Enterprise Value 6G SATA SSD (Intel S4500/S4150)	SATA	6G	Ent. Value	3800 GB
UCS-SD960G6SB-EV	960GB 2.5 inch Enterprise Value 6G SATA SSD	SATA	6G	Ent. Value	960 GB
UCS-SD19T6SB-EV	1.9TB 2.5 inch Enterprise Value 6G SATA SSD	SATA	6G	Ent. Value	1900 GB

Table 14 Available Drive Options *(continued)*

Product ID (PID)	Description	Drive Type	Speed	Performance/ Endurance /Value	Size
UCS-SD38T6SB-EV	3.8TB 2.5 inch Enterprise Value 6G SATA SSD	SATA	6G	Ent. Value	3800 GB
UCS-SD78T6SB-EV	7.6TB 2.5 inch Enterprise Value 6G SATA SSD	SATA	6G	Ent. Value	7600 GB
UCS-SD76TMS4-EV	7.6TB 2.5in Enter Value 6GSATA Micron SSD(1X endurance)	SATA	6G	Ent. Value	7600 GB
UCS-SD38TMS4-EV	3.8TB 2.5in Enter Value 6GSATA Micron SSD(1X endurance)	SATA	6G	Ent. Value	3800 GB
UCS-SD19TMS4-EV	1.9TB 2.5in Enter Value 6GSATA Micron SSD(1X endurance)	SATA	6G	Ent. Value	1900 GB
UCS-SD16TMS4-EV	1.6TB 2.5in Enter Value 6GSATA Micron SSD(1X endurance)	SATA	6G	Ent. Value	1600 GB
UCS-SD960GMS4-EV	960GB 2.5in Enter Value 6GSATA Micron SSD(1X endurance)	SATA	6G	Ent. Value	960 GB
UCS-SD480GMS4-EV	480GB 2.5in Enter Value 6GSATA Micron SSD(1X endurance)	SATA	6G	Ent. Value	480 GB
UCS-SD240GMS4-EV	240GB 2.5in Enter Value 6GSATA Micron SSD(1X endurance)	SATA	6G	Ent. Value	240 GB
Self-Encrypted Drives (SEDs)					
UCS-HD600G15K9	600GB 12G SAS 15K RPM SFF HDD (SED),FIPS 140-2	SAS	15K RPM	N/A	600 GB
UCS-HD18G10K9	1.8TB 12G SAS 10K RPM SFF HDD (4K format, SED),FIPS 140-2	SAS	10K RPM	N/A	1800 GB
UCS-HD24T10BNK9	2.4 TB 12G SAS 10K RPM SFF HDD (4K) SED, FIPS 140-2	SAS	10K RPM	N/A	2400 GB
UCS-SD800GBKBNK9	800GB 2.5" Enterprise performance 12GSAS SSD(3DWPD,SED-FIPS)	SAS		Ent. Perf 3X	800 GB
UCS-SD960GBKBNK9	960GB 2.5" Enterprise value 12G SAS SSD (1X endurance, FIPS)	SAS		Ent. Value 1X	960 GB
UCS-SD38TBKBNK9	3.8TB 2.5" Enterprise value 12G SAS SSD (1 DWPD, SED-FIPS)	SAS		Ent. Value 1X	3.8 TB
UCS-SD16TBKBNK9	1.6TB 2.5" Enterprise performance 12GSAS SSD(3 DWPD,SED-FIPS)	SAS		Ent. Perf 3X	1.6 TB
UCS-SD960GM6NK9	960GB Enterprise Value SATA SSD (1X , SED)	SATA		Ent. Value 1X	960 GB

Table 14 Available Drive Options *(continued)*

Product ID (PID)	Description	Drive Type	Speed	Performance/ Endurance /Value	Size
UCS-SD76TM6NK9	7.6TB Enterprise Value SATA SSD (1X, SED)	SATA		Ent. Value 1X	7.6 TB
UCS-SD19TM6NK9	1.9TB 2.5in Enterprise performance 6GSATA SSD(3X endurance)	SATA		Ent. Perf 3X	1.9 TB
NVMe[3],[4],[5]					
UCSB-NVMEXPB-I375	Cisco 2.5in U.2 375GB Intel P4800 NVMe Med. Perf	NVMe	Med Perf	Med Perf	375 GB
UCSB-NVMEXP-I750	750 GB 2.5in Intel Optane NVMe Extreme Perf	NVMe	Extrm Perf	Extreme Perf	750 GB
UCSB-NVME2H-I1000	Cisco 2.5" U.2 1,0 TB Intel P4510 NVMe High Perf. Value Endurance	NVMe	High Perf	High Perf/Value Endurance	1000 GB
UCSB-NVMHG-W3200	3.2TB 2.5in U.2 WD SN840 NVMe Extreme Perf. High Endurance	NVMe	Extrm Perf	Extrm Perf/High Endurance	3.2 TB
UCSB-NVMHG-W7600	7.6TB 2.5in U.2 WD SN840 NVMe Extreme Perf. Value Endurance	NVMe	Extrm Perf	Extrm Perf/High Endurance	7.6 TB
UCSB-NVMHG-W15300	15.3TB 2.5in U.2 WD SN840 NVMe Extreme Perf. High Endurance	NVMe	Extrm Perf	Extrm Perf/High Endurance	15.3 TB

Notes:

1. HDDs and SSDs require either of the following storage controllers in the front mezzanine slot:

   UCSB-MRAID12G, or

   UCSB-MRAID12G-HE

2. For 4K native (4Kn) drives:

   VMWare ESXi 6.0 does not support 4Kn Drives. 4Kn drive support with VMWare is available in release 6.7 and later.

   4K native drives require UEFI Boot

3. NVMe drives require the following storage controller in the front mezzanine slot:

   UCSB-LSTOR-PT

4. For HDD or SSD drives to be in a RAID group, two identical HDDs or SSDs must be used in the group.
5. If HDD or SSD are in JBOD Mode, the drives do not need to be identical.

NOTE: Cisco uses solid state drives (SSDs) from a number of vendors. All solid state drives (SSDs) are subject to physical write limits and have varying maximum usage limitation specifications set by the manufacturer. Cisco will not replace any solid state drives (SSDs) that have exceeded any maximum usage specifications set by Cisco or the manufacturer, as determined solely by Cisco.

Intel® Virtual RAID on CPU (Intel® VROC)

The server supports Intel® Virtual RAID on CPU (Intel® VROC). VROC is an enterprise RAID solution used with Intel NVMe SSDs (see *Table 15* for supported Intel NVMe SSDs). The Intel® Volume Management Device (Intel® VMD) is a controller integrated into the CPU PCIe root complex. Intel® VMD NVMe SSDs are connected to the CPU, which allows the full performance potential of fast Intel® Optane™ SSDs to be realized. Intel® VROC, when implemented, replaces traditional hardware RAID host bus adapter (HBA) cards placed between the drives and the CPU.

NOTE:

- Intel® VROC is only supported with Intel drives
- Intel® VROC enablement key factory pre-provisioned to BIOS - no additional licensing required.

VROC has the following features:

- Small Form Factor (SFF) drive support (only)
- No battery backup (BBU) or external SuperCap needed
- Software-based solution utilizing Intel SFF NVMe direct connected to Intel CPU
- RAID 0/1/5/10 support
- Windows, Linux, VMware OS support.
- Host Tools- Windows GUI/CLI, Linux CLI.
- UEFI Support- HII Utility, OBSE.
- Intel VROC NVMe operates in UEFI mode only

See the **instructions on setting up and managing VROC for Intel NVMe SSDs** for more information.

STEP 8 CHOOSE SOFTWARE

A UCSM software version needs to be selected for the standalone UCS B200 M5 Blade PID (UCSB-B200-M5-UPG).



NOTE:

- This is a new mandatory option for standalone blades starting with the UCS B200 M5.
- When the UCS B200 M5 is configured inside of a chassis in the CCW ordering tool, the UCSM software version is selected at the chassis level. The software option will not be available under the UCS B200 M5 in that case.
- The recommended UCS releases for the UCS B200 M5 are UCSM 3.2(2) and UCSM 4.0. These releases support higher wattage CPUs. FI 6454 and/or VIC 1400 require release UCSM 4.0(1) or greater.

Choose one software PID from *Table 16*.

Table 15 Available UCSM Software

Product ID (PID)	Product Description	Software Version
N20-FW017[1]	UCS 5108 Blade Chassis FW Package 4.1	UCSM 4.1
N20-FW018	UCS 5108 Blade Chassis FW Package 4.2	UCSM 4.2

Notes:

1. If selected cannot select with DIMM PID UCS-ML-128G4RT-H

STEP 9 CHOOSE OPTIONAL SECURE DIGITAL CARDS or M.2 DRIVES

A mini-storage connector is provided on the motherboard. There are two choices of mini-storage modular adapters that fit in the connector on the motherboard.

1. Adapter with two SD HC sockets that accommodate up to two SDHC cards
2. Adapter with two M.2 sockets that accommodate up to two M.2 devices

SD Cards and Modular Adapter

The SDHC card ordering information is listed in *Table 17*.

Table 16 PIDs for Secure Digital High-Capacity Card(s) and Modular Adapter

Product ID (PID)	PID Description
UCS-SD-32G-S	32 GB SD Card for UCS servers
UCS-SD-64G-S	64 GB SD Card for UCS servers
UCS-SD-128G	128GB SD Card for UCS servers
UCS-MSTOR-SD[1]	Modular adapter for SD card

Notes:
1. The SD modular adapter (PID UCS-MSTOR-SD) is auto-included in CCW and is not selectable.



NOTE: Starting from vSphere 8.0, SD cards/USB media as a standalone boot device will not be supported by VMware. For more information please refer to the VMware KB article: https://kb.vmware.com/s/article/85685

Supported Configurations

(1) Select one or two Cisco secure digital cards

- Select up to two 32, 64, or 128 GB SD cards

(2) Do not mix SD cards

(3) If you select SDHC cards, you cannot select any M.2 SATA SSD drive.

M.2 SATA Cards and Modular Adapter

Order one or two matching M.2 SATA SSDs (see *Table 18*) along with a mini storage carrier or a boot-optimized RAID controller (see *Table 19*).

NOTE: It is recommended that M.2 SATA SSDs be used as boot-only devices.

Each mini storage carrier or boot-optimized RAID controller can accommodate up to two SATA M.2 SSDs shown in *Table 18*.

Table 17 M.2 SATA SSDs

Product ID (PID)	PID Description
UCS-M2-I240GB	240 GB M.2 SATA SSD
UCS-M2-I480GB	480 GB M.2 SATA SSD
UCS-M2-240G	240GB SATA M.2
UCS-M2-480G	480GB M.2 SATA SSD
UCS-M2-960G	960GB SATA M.2

Table 18 Mini Storage Carrier/Boot-Optimized RAID Controller

Product ID (PID)	PID Description
UCS-MSTOR-M2	Mini Storage Carrier for M.2 SATA (holds up to 2 M.2 SATA SSDs)
UCS-M2-HWRAID	Cisco Boot optimized M.2 RAID controller (holds up to 2 M.2 SATA SSDs)

NOTE:

- The UCS-M2-HWRAID boot-optimized RAID controller supports RAID 1 and JBOD mode
- (CIMC/UCSM) is supported for configuring of volumes and monitoring of the controller and installed SATA M.2 drives
- The minimum version of Cisco IMC and Cisco UCS Manager that support this controller is 4.0(4) and later. The name of the controller in the software is MSTOR-RAID
- The SATA M.2 drives can boot in UEFI mode only. Legacy boot mode is not supported
- Hot-plug replacement is not supported. The server must be powered off.
- The boot-optimized RAID controller is not supported when the server is used as a compute node in HyperFlex configurations

- Order either the Mini Storage carrier or the Boot-Optimized RAID controller from *Table 19*.

  - Choose the UCS-MSTOR-M2 mini storage carrier for controlling the M.2 SATA drives with no RAID control.
  - Choose the UCS-M2-HWRAID Boot-Optimized RAID controller for hardware RAID across the two internal SATA M.2 drives. The Boot-Optimized RAID controller holds up to 2 matching M.2 SATA drives.
- Order up to two matching M.2 SATA SSDs from *Table 18*.



NOTE: The Boot-Optimized RAID controller supports VMWare, Windows and Linux Operating Systems

Caveats

- You cannot mix M.2 SATA SSDs with SD cards.
- Order either one or two identical M.2 SATA SSDs for the mini-storage carrier or boot-optimized RAID controller. You cannot mix M.2 SATA SSD capacities.

STEP 10 CHOOSE OPTIONAL TRUSTED PLATFORM MODULE

Trusted Platform Module (TPM) is a computer chip or microcontroller that can securely store artifacts used to authenticate the platform or server. These artifacts can include passwords, certificates, or encryption keys. A TPM can also be used to store platform measurements that help ensure that the platform remains trustworthy. Authentication (ensuring that the platform can prove that it is what it claims to be) and attestation (a process helping to prove that a platform is trustworthy and has not been breached) are necessary steps to ensure safer computing in all environments.

Table 19 Available TPM Option

Product ID (PID)	Description
UCSX-TPM2-001	Trusted Platform Module 1.2 for UCS (SPI-based)
UCSX-TPM2-002	Trusted Platform Module 2.0 for UCS servers
UCSX-TPM2-002B	Trusted Platform Module2.0 M5 UCS svr (FIPS 140-2 Compliant)

NOTE:

1. The TPM module used in this system conforms to TPM v1.2 and 2.0, as defined by the Trusted Computing Group (TCG). It is also SPI-based.

- 2. TPM installation is supported after-factory. However, a TPM installs with a one-way screw and cannot be replaced, upgraded, or moved to another server. If a server with a TPM is returned, the replacement server must be ordered with a new TPM. If there is no existing TPM in the server, you can install TPM 2.0. Refer to the following document for Installation location and instructions: Cisco UCS B200 M5 Server Installation Guide.

STEP 11 CHOOSE OPTIONAL INTERNAL USB 3.0 DRIVE

You may order one optional internal USB 3.0 drive. The USB drive ordering information is listed in *Table 21*.

Table 20 Available USB Option

Product ID (PID)	Description
UCS-USBFLSHB-16GB	UCS Servers 16GB Flash USB Drive

NOTE: A clearance of 0.950 inches (24.1 mm) is required for the USB device to be inserted and removed (see *Figure 4*).

The USB drive listed in *Table 21* has the correct clearance. If you choose your own USB drive, it must have the required clearance.

Figure 4 USB Clearance

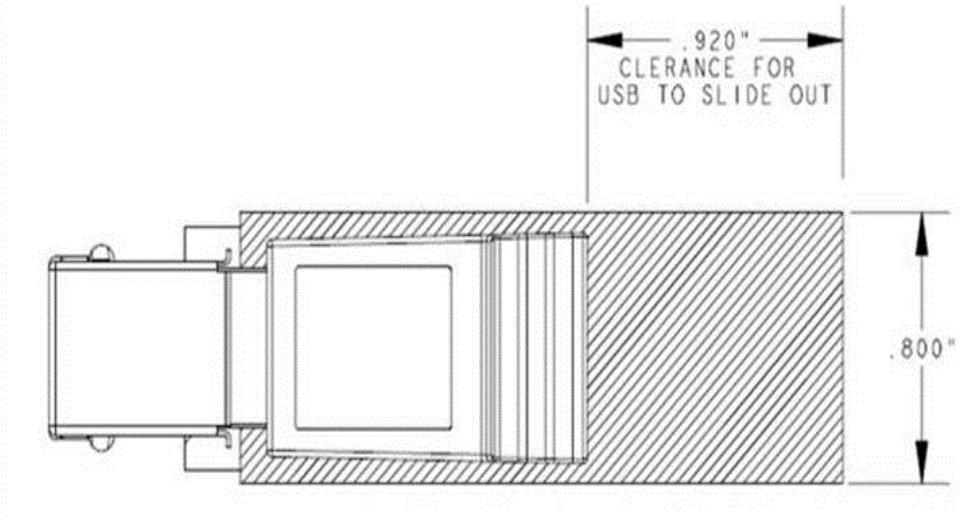

STEP 12 CHOOSE OPERATING SYSTEM AND VALUE-ADDED SOFTWARE

For more details on supported operating systems and software for this server, see the Hardware and Software Compatibility List (HCL

Select

- Cisco Software (*Table 22*)
- OEM Software (*Table 23*)
- Operating System (*Table 24*)

Table 21 Cisco Software

Product ID (PID)	PID Description
Nexus 1000V for Hyper-V and vSphere	
N1K-VSG-UCS-BUN	Nexus 1000V Adv Edition for vSphere Paper License Qty 1
UCS Multi-Domain Manager	
UCS-MDMGR-1S	UCS Central Per Server License
NOTE: IF you must order quantity greater than 1 of UCS-MDMGR-1S, you need to reference the UCS Central Per Server Data Sheet to order the standalone PIDs: UCS-MDMGR-LIC= or UCS-MDMGR-1DMN=	

Table 22 OEM Software

Product ID (PID)	PID Description
VMware vCenter	
VMW-VCS-STD-1A	VMware vCenter 6 Server Standard, 1 yr support required
VMW-VCS-STD-3A	VMware vCenter 6 Server Standard, 3 yr support required
VMW-VCS-STD-5A	VMware vCenter 6 Server Standard, 5 yr support required
VMW-VCS-FND-1A	VMware vCenter 6 Server Foundation (4 Host), 1 yr supp reqd
VMW-VCS-FND-3A	VMware vCenter 6 Server Foundation (4 Host), 3 yr supp reqd
VMW-VCS-FND-5A	VMware vCenter 6 Server Foundation (4 Host), 5 yr supp reqd

Table 23 Operating System

Product ID (PID)	PID Description
Microsoft Windows Server	

Table 23 ***(continued)*** **Operating System**

Product ID (PID)	PID Description
MSWS-19-DC16C	Windows Server 2019 Data Center (16 Cores/Unlimited VMs)
MSWS-19-DC16C-NS	Windows Server 2019 DC (16 Cores/Unlim VMs) - No Cisco SVC
MSWS-19-ST16C	Windows Server 2019 Standard (16 Cores/2 VMs)
MSWS-19-ST16C-NS	Windows Server 2019 Standard (16 Cores/2 VMs) - No Cisco SVC
MSWS-22-ST16C	Windows Server 2022 Standard (16 Cores/2 VMs)
MSWS-22-ST16C-NS	Windows Server 2022 Standard (16 Cores/2 VMs) - No Cisco SVC
MSWS-22-DC16C	Windows Server 2022 Data Center (16 Cores/Unlimited VMs)
MSWS-22-DC16C-NS	Windows Server 2022 DC (16 Cores/Unlim VMs) - No Cisco SVC
Red Hat	
RHEL-2S2V-1A	Red Hat Enterprise Linux (1-2 CPU,1-2 VN); 1-Yr Support Req
RHEL-2S2V-3A	Red Hat Enterprise Linux (1-2 CPU,1-2 VN); 3-Yr Support Req
RHEL-2S2V-5A	Red Hat Enterprise Linux (1-2 CPU,1-2 VN); 5-Yr Support Req
RHEL-VDC-2SUV-1A	RHEL for Virt Datacenters (1-2 CPU, Unlim VN) 1 Yr Supp Req
RHEL-VDC-2SUV-3A	RHEL for Virt Datacenters (1-2 CPU, Unlim VN) 3 Yr Supp Req
RHEL-VDC-2SUV-5A	RHEL for Virt Datacenters (1-2 CPU, Unlim VN) 5 Yr Supp Req
Red Hat Ent Linux/ High Avail/ Res Strg/ Scal	
RHEL-2S2V-1S	Red Hat Enterprise Linux (1-2 CPU,1-2 VN); Prem 1-Yr SnS
RHEL-2S2V-3S	Red Hat Enterprise Linux (1-2 CPU,1-2 VN); Prem 3-Yr SnS
RHEL-2S-HA-1S	RHEL High Availability (1-2 CPU); Premium 1-yr SnS
RHEL-2S-HA-3S	RHEL High Availability (1-2 CPU); Premium 3-yr SnS
RHEL-2S-RS-1S	RHEL Resilent Storage (1-2 CPU); Premium 1-yr SnS
RHEL-2S-RS-3S	RHEL Resilent Storage (1-2 CPU); Premium 3-yr SnS
RHEL-VDC-2SUV-1S	RHEL for Virt Datacenters (1-2 CPU, Unlim VN) 1 Yr SnS Reqd
RHEL-VDC-2SUV-3S	RHEL for Virt Datacenters (1-2 CPU, Unlim VN) 3 Yr SnS Reqd
Red Hat SAP	
RHEL-SAP-2S2V-1S	RHEL for SAP Apps (1-2 CPU, 1-2 VN); Prem 1-Yr SnS Reqd
RHEL-SAP-2S2V-3S	RHEL for SAP Apps (1-2 CPU, 1-2 VN); Prem 3-Yr SnS Reqd
RHEL-SAPSP-3S	RHEL SAP Solutions Premium - License with 3 Years of SnS
RHEL-SAPSS-3S	RHEL SAP Solutions Standard - License with 3 Years of SnS

Table 23 *(continued)* **Operating System**

Product ID (PID)	PID Description
VMware	
VMW-VSP-STD-1A	VMware vSphere 7 Std (1 CPU, 32 Core) 1-yr, Support Required
VMW-VSP-STD-3A	VMware vSphere 7 Std (1 CPU, 32 Core) 3-yr, Support Required
VMW-VSP-STD-5A	VMware vSphere 7 Std (1 CPU, 32 Core) 5-yr, Support Required
VMW-VSP-EPL-1A	VMware vSphere 7 Ent Plus (1 CPU, 32 Core) 1Yr, Support Reqd
VMW-VSP-EPL-3A	VMware vSphere 7 Ent Plus (1 CPU, 32 Core) 3Yr, Support Reqd
VMW-VSP-EPL-5A	VMware vSphere 7 Ent Plus (1 CPU, 32 Core) 5Yr, Support Reqd
SUSE	
SLES-2S2V-1A	SUSE Linux Enterprise Svr (1-2 CPU,1-2 VM); 1-Yr Support Req
SLES-2S2V-3A	SUSE Linux Enterprise Svr (1-2 CPU,1-2 VM); 3-Yr Support Req
SLES-2S2V-5A	SUSE Linux Enterprise Svr (1-2 CPU,1-2 VM); 5-Yr Support Req
SLES-2S2V-1S	SUSE Linux Enterprise Svr (1-2 CPU,1-2 VM); Prio 1-Yr SnS
SLES-2SUV-3S	SUSE Linux Enterprise Svr (1-2 CPU,Unl VM); Prio 3-Yr SnS
SLES-2SUV-5S	SUSE Linux Enterprise Svr (1-2 CPU,Unl VM); Prio 5-Yr SnS
SLES-2S-HA-1S	SUSE Linux High Availability Ext (1-2 CPU); 1yr SnS
SLES-2S-HA-3S	SUSE Linux High Availability Ext (1-2 CPU); 3yr SnS
SLES-2S-HA-5S	SUSE Linux High Availability Ext (1-2 CPU); 5yr SnS
SLES-2S-GC-1S	SUSE Linux GEO Clustering for HA (1-2 CPU); 1yr Sns
SLES-2S-GC-3S	SUSE Linux GEO Clustering for HA (1-2 CPU); 3yr SnS
SLES-2S-GC-5S	SUSE Linux GEO Clustering for HA (1-2 CPU); 5yr SnS
SLES-2S-LP-1S	SUSE Linux Live Patching Add-on (1-2 CPU); 1yr SnS Required
SLES-2S-LP-3S	SUSE Linux Live Patching Add-on (1-2 CPU); 3yr SnS Required
SLES-2S-LP-1A	SUSE Linux Live Patching Add-on (1-2 CPU); 1yr Support Req
SLES-2S-LP-3A	SUSE Linux Live Patching Add-on (1-2 CPU); 3yr Support Req
SLES and SAP	
SLES-SAP-2S2V-1A	SLES for SAP Apps (1-2 CPU, 1-2 VM); 1-Yr Support Reqd
SLES-SAP-2S2V-3A	SLES for SAP Apps (1-2 CPU, 1-2 VM); 3-Yr Support Reqd
SLES-SAP-2S2V-5A	SLES for SAP Apps (1-2 CPU, 1-2 VM); 5-Yr Support Reqd
SLES-SAP-2S2V-1S	SLES for SAP Apps (1-2 CPU, 1-2 VM); Priority 1-Yr SnS

Table 23 ***(continued)*** **Operating System**

Product ID (PID)	PID Description
SLES-SAP-2S2V-3S	SLES for SAP Apps (1-2 CPU, 1-2 VM); Priority 3-Yr SnS
SLES-SAP-2S2V-5S	SLES for SAP Apps (1-2 CPU, 1-2 VM); Priority 5-Yr SnS

STEP 13 CHOOSE OPTIONAL OPERATING SYSTEM MEDIA KIT

Select the optional operating system media listed in *Table 25*

Table 24 OS Media

Product ID (PID)	PID Description
MSWS-19-ST16C-RM	Windows Server 2019 Stan (16 Cores/2 VMs) Rec Media DVD Only
MSWS-19-DC16C-RM	Windows Server 2019 DC (16Cores/Unlim VM) Rec Media DVD Only

STEP 14 CHOOSE SERVICE and SUPPORT LEVEL

A variety of service options are available, as described in this section.

Unified Computing Warranty, No Contract

If you have noncritical implementations and choose to have no service contract, the following coverage is supplied:

- Three-year parts coverage.
- Next business day (NBD) parts replacement eight hours a day, five days a week.
- 90-day software warranty on media.
- Downloads of BIOS, drivers, and firmware updates.
- UCSM updates for systems with Unified Computing System Manager. These updates include minor enhancements and bug fixes that are designed to maintain the compliance of UCSM with published specifications, release notes, and industry standards.

Unified Computing Support Service

For support of the entire Unified Computing System, Cisco offers the Cisco Smart Net Total Care for UCS Service. This service provides expert software and hardware support to help sustain performance and high availability of the unified computing environment. Access to Cisco Technical Assistance Center (TAC) is provided around the clock, from anywhere in the world

For systems that include Unified Computing System Manager, the support service includes downloads of UCSM upgrades. The Cisco Smart Net Total Care for UCS Service includes flexible hardware replacement options, including replacement in as little as two hours. There is also access to Cisco's extensive online technical resources to help maintain optimal efficiency and uptime of the unified computing environment. For more information please refer to the following url: http://www.cisco.com/c/en/us/services/technical/smart-net-total-care.html?stickynav=1You can choose a desired service listed in ***Table 26***.

Table 25 Unified Computing Support Service

Service SKU	Service Level GSP	On Site?	Description
CON-PREM-SBB200M5	C2P	Yes	SNTC 24X7X2OS
CON-UCSD8-SBB200M5	UCSD8	Yes	UC SUPP DR 24X7X2OS*
CON-C2PL-SBB200M5	C2PL	Yes	LL 24X7X2OS**
CON-OSP-SBB200M5	C4P	Yes	SNTC 24X7X4OS
CON-UCSD7-SBB200M5	UCSD7	Yes	UCS DR 24X7X4OS*
CON-C4PL-SBB200M5	C4PL	Yes	LL 24X7X4OS**
CON-USD7L-SBB200M5	USD7L	Yes	LLUCS HW DR 24X7X4OS***
CON-OSE-SBB200M5	C4S	Yes	SNTC 8X5X4OS

Table 25 Unified Computing Support Service *(continued)*

Service SKU	Service Level GSP	On Site?	Description
CON-UCSD6-SBB200M5	UCSD6	Yes	UC SUPP DR 8X5X4OS*
CON-SNCO-SBB200M5	SNCO	Yes	SNTC 8x7xNCDOS****
CON-OS-SBB200M5	CS	Yes	SNTC 8X5XNBDOS
CON-UCSD5-SBB200M5	UCSD5	Yes	UCS DR 8X5XNBDOS*
CON-S2P-SBB200M5	S2P	No	SNTC 24X7X2
CON-S2PL-SBB200M5	S2PL	No	LL 24X7X2**
CON-SNTP-SBB200M5	SNTP	No	SNTC 24X7X4
CON-SNTPL-SBB200M5	SNTPL	No	LL 24X7X4**
CON-SNTE-SBB200M5	SNTE	No	SNTC 8X5X4
CON-SNC-SBB200M5	SNC	No	SNTC 8x7xNCD****
CON-SNT-SBB200M5	SNT	No	SNTC 8X5XNBD
CON-SW-SBB200M5	SW	No	SNTC NO RMA
Note: For PID UCSB-B200-M5-U, select Service SKU with BB200M5U suffix (Example: CON-PREM- BB200M5U)			
For PID UCSB-B200-M5-CH, select Service SKU with B200M5CH suffix (Example: CON-PREM- B200M5CH)			
*Includes Drive Retention (see ***UCS Drive Retention Service on page 50***)			
Includes Local Language Support (see ***Local Language Technical Support for UCS on page 51*) – Only available in China and Japan			
***Includes Local Language Support and Drive Retention – Only available in China and Japan			
****Available in China Only			

Smart Net Total Care for Cisco UCS Onsite Troubleshooting Service

For faster parts replacement than is provided with the standard Cisco Unified Computing System warranty, Cisco offers the Cisco Smart Net Total Care for UCS Hardware Only Service. You can choose from two levels of advanced onsite parts replacement coverage in as little as four hours. Smart Net Total Care for UCS Hardware Only Service provides remote access any time to Cisco support professionals who can determine if a return materials authorization (RMA) is required. You can choose a desired service listed in ***Table 27***.

Table 26 SNTC for Cisco UCS Onsite Troubleshooting Service (PID UCSB-B200-M5)

Service SKU	Service Level GSP	On Site?	Description
CON-UCW7-SBB200M5	UCW7	Yes	UCS HW 24X7X4OS
CON-UCWD7-SBB200M5	UCWD7	Yes	UCS HW+DR 24X7X4OS*

Table 26 SNTC for Cisco UCS Onsite Troubleshooting Service (PID UCSB-B200-M5) *(continued)*

Service SKU	Service Level GSP	On Site?	Description
CON-UCW7L-SBB200M5	UCW7L	Yes	LL UCS 24X7X4OS**
CON-UWD7L-SBB200M5	UWD7L	Yes	LL UCS DR 24X7X4OS***
CON-UCW5-SBB200M5	UCW5	Yes	UCS HW 8X5XNBDOS
CON-UCWD5-SBB200M5	UCWD5	Yes	UCS HW+DR 8X5XNBDOS*
Note: For PID UCSB-B200-M5-U, select Service SKU with BB200M5U suffix (Example: CON-PREM- BB200M5U)			
For PID UCSB-B200-M5-CH, select Service SKU with B200M5CH suffix (Example: CON-PREM- B200M5CH)			
*Includes Drive Retention (see ***UCS Drive Retention Service on page 50***)			
Includes Local Language Support (see ***Local Language Technical Support for UCS on page 51*) – Only available in China and Japan			
***Includes Local Language Support and Drive Retention – Only available in China and Japan			

Partner Support Service for UCS

Cisco Partner Support Service (PSS) is a Cisco Collaborative Services service offering that is designed for partners to deliver their own branded support and managed services to enterprise customers. Cisco PSS provides partners with access to Cisco's support infrastructure and assets to help them:

- Expand their service portfolios to support the most complex network environments
- Lower delivery costs
- Deliver services that increase customer loyalty

PSS options enable eligible Cisco partners to develop and consistently deliver high-value technical support that capitalizes on Cisco intellectual assets. This helps partners to realize higher margins and expand their practice.

PSS is available to all Cisco PSS partners.

The two Partner Unified Computing Support Options include:

- Partner Support Service for UCS
- Partner Support Service for UCS Hardware Only

PSS for UCS provides hardware and software support, including triage support for third party software, backed by Cisco technical resources and level three support. You can choose a desired service listed in ***Table 28***.

Table 27 PSS for UCS (PID UCSB-B200-M5)

Service SKU	Service Level GSP	On Site?	Description
CON-PSJ8-SBB200M5	PSJ8	Yes	UCS PSS 24X7X2 OS
CON-PSJ7-SBB200M5	PSJ7	Yes	UCS PSS 24X7X4 OS

Table 27 PSS for UCS (PID UCSB-B200-M5) *(continued)*

Service SKU	Service Level GSP	On Site?	Description
CON-PSJD7-SBB200M5	PSJD7	Yes	UCS PSS 24X7X4 DR*
CON-PSJ6-SBB200M5	PSJ6	Yes	UCS PSS 8X5X4 OS
CON-PSJD6-SBB200M5	PSJD6	Yes	UCS PSS 8X5X4 DR*
CON-PSJ4-SBB200M5	PSJ4	No	UCS SUPP PSS 24X7X2
CON-PSJ3-SBB200M5	PSJ3	No	UCS SUPP PSS 24X7X4
CON-PSJ2-SBB200M5	PSJ2	No	UCS SUPP PSS 8X5X4
CON-PSJ1-SBB200M5	PSJ1	No	UCS SUPP PSS 8X5XNBD
Note: For PID UCSB-B200-M5-U, select Service SKU with BB200M5U suffix (Example: CON-PREM- BB200M5U)			
For PID UCSB-B200-M5-CH, select Service SKU with B200M5CH suffix (Example: CON-PREM- B200M5CH)			
*Includes Drive Retention (see *UCS Drive Retention Service on page 50*)			

PSS for UCS Hardware Only

PSS for UCS Hardware Only provides customers with replacement parts in as little as two hours and provides remote access any time to Partner Support professionals who can determine if a return materials authorization (RMA) is required. You can choose a desired service listed in *Table 29*

Table 28 PSS for UCS Hardware Only (PID UCSB-B200-M5)

Service SKU	Service Level GSP	On Site?	Description
CON-PSW7-SBB200M5	PSW7	Yes	UCS W PSS 24X7X4 OS
CON-PSWD7-SBB200M5	PSWD7	Yes	UCS W PSS 24X7X4 DR*
CON-PSW6-SBB200M5	PSW6	Yes	UCS W PSS 8X5X4 OS
CON-PSWD6-SBB200M5	PSWD6	Yes	UCS W PSS 8X5X4 DR*
CON-PSW4-SBB200M5	PSW4	No	UCS W PL PSS 24X7X2
CON-PSW3-SBB200M5	PSW3	No	UCS W PL PSS 24X7X4
CON-PSW2-SBB200M5	PSW2	No	UCS W PL PSS 8X5X4
Note: For PID UCSB-B200-M5-U, select Service SKU with BB200M5U suffix (Example: CON-PREM- BB200M5U)			
For PID UCSB-B200-M5-CH, select Service SKU with B200M5CH suffix (Example: CON-PREM- B200M5CH)			
*Includes Drive Retention (see *UCS Drive Retention Service on page 50*)			

Unified Computing Combined Support Service

Combined Services makes it easier to purchase and manage required services under one contract. SNTC services for UCS help increase the availability of your vital data center infrastructure and realize the most value from your unified computing investment. The more benefits you realize from the Cisco Unified Computing System (Cisco UCS), the more important the technology becomes to your business. These services allow you to:

- Optimize the uptime, performance, and efficiency of your UCS
- Protect your vital business applications by rapidly identifying and addressing issues
- Strengthen in-house expertise through knowledge transfer and mentoring
- Improve operational efficiency by allowing UCS experts to augment your internal staff resources
- Enhance business agility by diagnosing potential issues before they affect your operations You can choose a desired service listed in *Table 30*.

Table 29 Combined Support Service for UCS (PID UCSB-B200-M5)

Service SKU	Service Level GSP	On Site?	Description
CON-NCF2P-SBB200M5	NCF2P	Yes	CMB SVC 24X7X2OS
CON-NCF4P-SBB200M5	NCF4P	Yes	CMB SVC 24X7X4OS
CON-NCF4S-SBB200M5	NCF4S	Yes	CMB SVC 8X5X4OS
CON-NCFCS-SBB200M5	NCFCS	Yes	CMB SVC 8X5XNBDOS
CON-NCF2-SBB200M5	NCF2	No	CMB SVC 24X7X2
CON-NCFP-SBB200M5	NCFP	No	CMB SVC 24X7X4
CON-NCFE-SBB200M5	NCFE	No	CMB SVC 8X5X4
CON-NCFT-SBB200M5	NCFT	No	CMB SVC 8X5XNBD
CON-NCFW-SBB200M5	NCFW	No	CMB SVC SW
Note: For PID UCSB-B200-M5-U, select Service SKU with BB200M5U suffix (Example: CON-PREM- BB200M5U)			
For PID UCSB-B200-M5-CH, select Service SKU with B200M5CH suffix (Example: CON-PREM- B200M5CH)			

UCS Drive Retention Service

With the Cisco Unified Computing Drive Retention Service, you can obtain a new disk drive in exchange for a faulty drive without returning the faulty drive.

Sophisticated data recovery techniques have made classified, proprietary, and confidential information vulnerable, even on malfunctioning disk drives. The Drive Retention service enables you to retain your drives and ensures that the sensitive data on those drives is not compromised, which reduces the risk of any potential liabilities. This service also enables you to comply with regulatory, local, and federal requirements.

If your company has a need to control confidential, classified, sensitive, or proprietary data, you might want to consider one of the Drive Retention Services listed in the above tables (where available)



NOTE: Cisco does not offer a certified drive destruction service as part of this service.

Local Language Technical Support for UCS

Where available, and subject to an additional fee, local language support for calls on all assigned severity levels may be available for specific product(s) – see tables above.

For a complete listing of available services for Cisco Unified Computing System, see the following URL: **http://www.cisco.com/en/US/products/ps10312/serv_group_home.html**

SUPPLEMENTAL MATERIAL

System Board

A top view of the UCS B200 M5 system board is shown in *Figure 5*.

Figure 5 UCS B200 M5 System Board

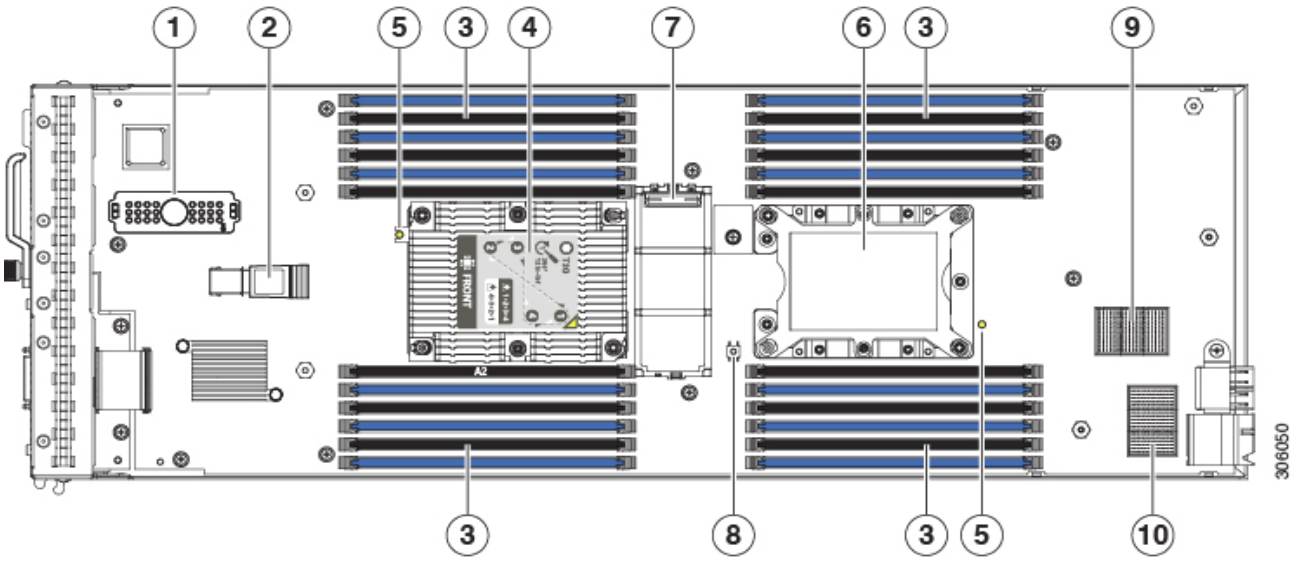

1	Front mezzanine connector	2	USB connector (shown populated) An internal USB 3.0 port is supported. A 16 GB USB drive (UCS-USBFLSHB-16GB) is available from Cisco. A clearance of 0.950 inches (24.1 mm) is required for the USB device to be inserted and removed.
3	DIMM slots	4	CPU 1 socket (shown populated)
5	CPU heat sink install guide pins	6	CPU 2 socket (shown unpopulated)
7	Mini storage connector	8	Diagnostic button
9	mLOM connector	10	Rear mezzanine connector

Note: When the front mezzanine storage module is installed, the USB connector is underneath it. Use the small cutout opening in the storage module to visually determine the location of the USB connector when you need to insert a USB drive. When the NVIDIA GPU is installed in the front mezzanine slot, you cannot see the USB connector.

Memory Support for CPU Classes and CPU Modes



NOTE: Detailed memory configurations are described in Cisco UCS **Cisco UCS C220/C240/B200 M5 Memory Guide**

SPARE PARTS

This section lists the upgrade and service-related parts for the UCS B200 M5 server. Some of these parts are configured with every server or with every UCS 5108 blade server chassis.

Table 30 Spare Parts

Product ID (PID)	PID Description
Packaging Kit	
UCSB-10-PK-M5BLADE	MULTI: 10-PK B200 M5 W/BLANKING PANELS, PACKAGING KIT
UCSB-B200-PKG=	UCSB B200 Packaging (M2, M3, M4, M5)
Local KVM I/O Cable	
N20-BKVM=	KVM local IO cable for UCS servers console port
CPU Accessories	
UCSB-HS-M5-F=	CPU Heat Sink for UCS B-Series M5 CPU socket (Front)
UCSB-HS-M5-R=	CPU Heat Sink for UCS B-Series M5 CPU socket (Rear)
UCS-CPU-TIM=	Single CPU thermal interface material syringe for M5 server HS seal
UCSX-HSCK=	UCS Processor Heat Sink Cleaning Kit (when replacing a CPU)2
UCS-CPUAT=	CPU Assembly Tool for M5 Servers
UCS-M5-CPU-CAR=	UCS M5 CPU Carrier
Memory	
UCS-DIMM-BLK	UCS DIMM Blanks
UCS-ML-128G4RW=	128GB DDR4-3200MHz LRDIMM 4Rx4 (16Gb)
UCS-MR-X64G2RW=	64GB DDR4-3200MHz RDIMM 2Rx4 (16Gb)
UCS-MR-X32G2RW=	32GB DDR4-3200MHz RDIMM 2Rx4 (8Gb)
UCS-MR-X16G1RW=	16GB DDR4-3200MHz RDIMM 1Rx4 (8Gb)
Storage Controller	
UCSB-MRAID-SC=	Supercap for FlexStorage 12G SAS RAID controller w/1GB FBWC
UCSB-MRAID12G=	Cisco FlexStorage 12G SAS RAID controller with drive bays
UCSB-MRAID12G-HE=	Cisco FlexStorage 12G SAS RAID controller with 2 GB flash-backed write cache and drive bays
UCSB-LSTOR-PT=	Cisco FlexStorage Passthrough module w/drive bays
UCSB-LSTOR-BK=	Cisco FlexStorage blanking panel w/o controller, w/o drive bays
Drives	

Table 30 Spare Parts

HDDs	
HDDs (15K RPM)	
UCS-HD300G15K12G=	300 GB 12G SAS 15K RPM SFF HDD
UCS-HD600G15K12G=	600 GB 12G SAS 15K RPM SFF HDD
UCS-HD900G15K12G=	900 GB 12G SAS 15K RPM SFF HDD
HDDs (10K RPM)	
UCS-HD300G10K12G=	300 GB 12G SAS 10K RPM SFF HDD
UCS-HD600G10K12G=	600 GB 12G SAS 10K RPM SFF HDD
UCS-HD12TB10K12G=	1.2 TB 12G SAS 10K RPM SFF HDD
UCS-HD18TB10KS4K=	1.8 TB 12G SAS 10K RPM SFF HDD (4K)
UCS-HD24TB10KS4K=	2.4 TB 12G SAS 10K RPM SFF HDD (4K)
Enterprise Performance SSDs (High endurance, supports up to 10X or 3X DWPD (drive writes per day))	
SAS SSDs	
UCS-SD800GKB3X-EP=	800GB 2.5in Enterprise Performance 12G SAS SSD(3X endurance)
UCS-SD16TKB3X-EP=	1.6TB 2.5in Enterprise Performance 12G SAS SSD(3X endurance)
UCS-SD32TKB3X-EP=	3.2TB 2.5in Enterprise Performance 12G SAS SSD(3X endurance)
SATA SSDs	
UCS-SD480GIS3-EP=	480GB 2.5in Enterprise performance 6G SATA SSD(3X endurance) (Intel S4600)
UCS-SD960GIS3-EP=	960GB 2.5in Enterprise performance 6G SATA SSD(3X endurance) (Intel S4600)
UCS-SD19TIS3-EP=	1.9TB 2.5in Enterprise performance 6G SATA SSD(3X endurance) (Intel S4600)
UCS-SD16TB12S3-EP=	1.6TB 2.5 inch Ent. Performance 6GSATA SSD(3X endurance)
UCS-SD800G12S3-EP=	800GB 2.5 inch Enterprise performance 6G SATA SSD(3 DWPD)
UCS-SD200G12S3-EP=	200GB 2.5 inch Enterprise performance 6G SATA SSD(3 DWPD)
UCS-SD19TBMB3X-EP=	1.9TB 2.5in Enterprise performance 6GSATA SSD(3X endurance)
UCS-SD480GBMB3XEP=	480GB 2.5in Enterprise performance 6GSATA SSD(3X endurance)
UCS-SD960GBMB3XEP=	960GB 2.5in Enterprise performance 6GSATA SSD(3X endurance)
Enterprise Value (Low endurance, supports up to 1X DWPD (drive writes per day))	
UCS-SD38TBKS4-EV=	3.8 TB 2.5 inch Enterprise Value 6G SATA SSD (Samsung PM863A/PM883)
UCS-SD120GBMS4-EV=	120 GB 2.5 inch Enterprise Value 6G SATA SSD (Micron 5100/5200)
UCS-SD480GBIS6-EV=	480 GB 2.5 inch Enterprise Value 6G SATA SSD (Intel S4500/S4150)

Table 30 Spare Parts

UCS-SD960GBIS6-EV=	960 GB 2.5 inch Enterprise Value 6G SATA SSD (Intel S4500/S4150)
UCS-SD38TBIS6-EV=	3.8 TB 2.5 inch Enterprise Value 6G SATA SSD (Intel S4500/S4150)
UCS-SD960GKB1X-EV=	960GB 2.5 inch Enterprise Value 12G SAS SSD
UCS-SD19TKB1X-EV=	1.9TB 2.5 inch Enterprise Value 12G SAS SSD
UCS-SD38TKB1X-EV=	3.8TB 2.5 inch Enterprise Value 12G SAS SSD
UCS-SD76TKB1X-EV=	7.6TB 2.5 inch Enterprise Value 12G SAS SSD
UCS-SD15TKB1X-EV=	15.3TB 2.5 inch Enterprise Value 12G SAS SSD
UCS-SD960G6SB-EV=	960GB 2.5 inch Enterprise Value 6G SATA SSD
UCS-SD19T6SB-EV=	1.9TB 2.5 inch Enterprise Value 6G SATA SSD
UCS-SD38T6SB-EV=	3.8TB 2.5 inch Enterprise Value 6G SATA SSD
UCS-SD78T6SB-EV=	7.6TB 2.5 inch Enterprise Value 6G SATA SSD
UCS-SD76TMS4-EV=	7.6TB 2.5in Enter Value 6GSATA Micron SSD(1X endurance)
UCS-SD38TMS4-EV=	3.8TB 2.5in Enter Value 6GSATA Micron SSD(1X endurance)
UCS-SD19TMS4-EV=	1.9TB 2.5in Enter Value 6GSATA Micron SSD(1X endurance)
UCS-SD16TMS4-EV=	1.6TB 2.5in Enter Value 6GSATA Micron SSD(1X endurance)
UCS-SD960GMS4-EV=	960GB 2.5in Enter Value 6GSATA Micron SSD(1X endurance)
UCS-SD480GMS4-EV=	480GB 2.5in Enter Value 6GSATA Micron SSD(1X endurance)
UCS-SD240GMS4-EV=	240GB 2.5in Enter Value 6GSATA Micron SSD(1X endurance)
Self-Encrypted Drives (SED)	
UCS-HD600G15K9=	600GB 12G SAS 15K RPM SFF HDD (SED)
UCS-HD18G10K9=	1.8TB 12G SAS 10K RPM SFF HDD (4K format, SED)
UCS-HD24T10BNK9=	2.4 TB 12G SAS 10K RPM SFF HDD (4K) SED
UCS-SD960GBKBNK9=	960GB 2.5" Enterprise value 12G SAS SSD (1X endurance, FIPS)
UCS-SD38TBKBNK9=	3.8TB 2.5" Enterprise value 12G SAS SSD (1 DWPD, SED-FIPS)
UCS-SD16TBKBNK9=	1.6TB 2.5" Enterprise performance 12GSAS SSD(3 DWPD,SED-FIPS)
UCS-SD960GM6NK9=	960GB Enterprise Value SATA SSD (1X , SED)
UCS-SD76TM6NK9=	7.6TB Enterprise Value SATA SSD (1X, SED)
UCS-SD19TM6NK9=	1.9TB 2.5in Enterprise performance 6GSATA SSD(3X endurance)
NVMe[1],[2],[3]	
UCSB-NVMEXPB-I375=	Cisco 2.5in U.2 375GB Intel P4800 NVMe Med. Perf

Table 30 Spare Parts

UCSB-NVMEXP-I750=	750 GB 2.5in Intel Optane NVMe Extreme Perf
UCSB-NVME2H-I1000=	Cisco 2.5" U.2 1,0 TB Intel P4510 NVMe High Perf. Value Endu
Supported Mezzanine cards	
UCSB-MLOM-40G-04=	UCS VIC 1440 modular LOM for blade servers mLOM
UCSB-MLOM-40G-03=	UCS VIC 1340 modular LOM for blade servers mLOM
UCSB-VIC-M84-4P=	Cisco UCS VIC 1480 mezzanine adapter Rear Mezzanine
UCSB-VIC-M83-8P=	Cisco UCS VIC 1380 mezzanine adapter
Port Expander Card for VIC option	
UCSB-MLOM-PT-01=	Cisco UCS Port Expander Card for VIC.
Trusted Platform Module	
UCSX-TPM2-001=	Trusted Platform Module for UCS (SPI-based)
UCSX-TPM2-002=	Trusted Platform Module 2.0 for UCS servers
UCSX-TPM2-002B=	Trusted Platform Module2.0 M5 UCS svr (FIPS 140-2 Compliant)
Secure Digital Cards	
UCS-SD-128G=	128 GB SD Card for UCS servers
UCS-SD-64G-S=	64 GB SD Card for UCS servers
UCS-SD-32G-S=	32 GB SD Card for UCS servers
UCS-MSTOR-SD=	SD module card (holds up to 2)
M.2 SATA SSD and Raid controller	
UCS-MSTOR-M2=	M.2 module (holds up to 2 M.2 SATA drives)
UCS-M2-HWRAID =	Cisco Boot optimized M.2 RAID controller (holds up to 2 M.2 SATA SSDs)
UCS-M2-I240GB=	240 GB M.2 SATA SSD
UCS-M2-I480GB=	480 GB M.2 SATA SSD
UCS-M2-240G=	240GB SATA M.2
UCS-M2-480G=	480GB M.2 SATA SSD
UCS-M2-960G=	960GB SATA M.2
USB 3.0 Drive	
UCS-USBFLSHB-16GB	UCS Servers 16 GB Flash USB Drive
Power Cables	
CAB-C13-C14-2M=	CABASY,WIRE,JUMPER CORD, PWR, 2 Meter, C13/C14,10A/250V

Table 30 Spare Parts

CAB-250V-10A-AR=	Power Cord, SFS, 250V, 10A, Argentina
CAB-9K10A-AU=	Power Cord, 250VAC 10A 3112 Plug, Australia
CAB-250V-10A-CN=	AC Power Cord - 250V, 10A - PRC
CAB-9K10A-EU=	Power Cord, 250VAC 10A CEE 7/7 Plug, EU
CAB-250V-10A-ID=	Power Cord, SFS, 250V, 10A, India
CAB-250V-10A-IS=	Power Cord, SFS, 250V, 10A, Israel
CAB-9K10A-IT=	Power Cord, 250VAC 10A CEI 23-16/VII Plug, Italy
CAB-9K10A-SW=	Power Cord, 250VAC 10A MP232 Plug, Switzerland
CAB-9K10A-UK=	Power Cord, 250VAC 10A BS1363 Plug (13 A fuse), UK
CAB-AC-L620-C13=	AC Power Cord, NEMA L6-20 - C13, 2M/6.5ft
CAB-250V-10A-BR=	Power Cord - 250V, 10A - Brazil
Software/Firmware	
IMC Supervisor	
CIMC-SUP-BASE-K9=	IMC Supervisor One-time Site Installation License
CIMC-SUP-B01=	IMC Supervisor-Branch Mgt SW for C-Series & E-Series up to 100 Svrs
CIMC-SUP-B02=	IMC Supervisor- Branch Mgt SW for C & E-Series up to 250 Svrs
CIMC-SUP-B10=	IMC Supervisor- Branch Mgt SW for C & E-Series up to 1K Svrs
CIMC-SUP-B25=	IMC Supervisor Branch Mgt SW for C & E-Series 25 Svrs
CIMC-SUP-A01=	IMC Supervisor Adv-Branch Mgt SW for C & E-Series 100 Svrs
CIMC-SUP-A02=	IMC Supervisor Adv-Branch Mgt SW for C & E-Series 250 Svrs
CIMC-SUP-A10=	IMC Supervisor Adv-Branch Mgt SW for C & E-Series 1000 Svrs
CIMC-SUP-A25=	IMC Supervisor Adv-Branch Mgt SW for C & E-Series 250 Svrs
EVAL-CIMC-SUP=	EVAL: IMC Supervisor-Branch Mgt SW for C/E-Series - 50 Svrs
EVAL-CIMC-SUP-BAS=	EVAL: IMC Supervisor One-time Site Installation License
UCS Multi-Domain Manager	
UCS-MDMGR-1S=	UCS Central Per Server License
NOTE: IF you must order quantity greater than 1 of UCS-MDMGR-1S, you need to reference the UCS Central Per Server Data Sheet to order the standalone PIDs: UCS-MDMGR-LIC= or UCS-MDMGR-1DMN=	
Microsoft Windows Server	
MSWS-19-DC16C=	Windows Server 2019 Data Center (16 Cores/Unlimited VMs)
MSWS-19-DC16C-NS=	Windows Server 2019 DC (16 Cores/Unlim VMs) - No Cisco SVC

Table 30 Spare Parts

MSWS-19-ST16C=	Windows Server 2019 Standard (16 Cores/2 VMs)
MSWS-19-ST16C-NS=	Windows Server 2019 Standard (16 Cores/2 VMs) - No Cisco SVC
MSWS-22-ST16C=	Windows Server 2022 Standard (16 Cores/2 VMs)
MSWS-22-ST16C-NS=	Windows Server 2022 Standard (16 Cores/2 VMs) - No Cisco SVC
MSWS-22-DC16C=	Windows Server 2022 Data Center (16 Cores/Unlimited VMs)
MSWS-22-DC16C-NS=	Windows Server 2022 DC (16 Cores/Unlim VMs) - No Cisco SVC
VMware vCenter	
VMW-VCS-STD-1A=	VMware vCenter 6 Server Standard, 1 yr support required
VMW-VCS-STD-3A=	VMware vCenter 6 Server Standard, 3 yr support required
VMW-VCS-STD-5A=	VMware vCenter 6 Server Standard, 5 yr support required
VMW-VCS-FND-1A=	VMware vCenter 6 Server Foundation (3 Host), 1 yr supp reqd
VMW-VCS-FND-3A=	VMware vCenter 6 Server Foundation (3 Host), 3 yr supp reqd
VMW-VCS-FND-5A=	VMware vCenter 6 Server Foundation (3 Host), 5 yr supp reqd
Red Hat	
RHEL-2S2V-1A=	Red Hat Enterprise Linux (1-2 CPU,1-2 VN)
RHEL-2S2V-3A=	Red Hat Enterprise Linux (1-2 CPU,1-2 VN)
RHEL-2S2V-1S=	Red Hat Enterprise Linux (1-2 CPU,1-2 VN)
RHEL-2S2V-3S=	Red Hat Enterprise Linux (1-2 CPU,1-2 VN)
RHEL-2S-HA-1S=	RHEL High Availability (1-2 CPU)
RHEL-2S-HA-3S=	RHEL High Availability (1-2 CPU)
RHEL-2S-RS-1S=	RHEL Resilient Storage (1-2 CPU)
RHEL-2S-RS-3S=	RHEL Resilient Storage (1-2 CPU)
RHEL-2S2V-5A=	Red Hat Enterprise Linux (1-2 CPU,1-2 VN)
RHEL-2S-HA-1A=	RHEL High Availability (1-2 CPU)
RHEL-2S-HA-3A=	RHEL High Availability (1-2 CPU)
RHEL-2S-HA-5A=	RHEL High Availability (1-2 CPU)
RHEL-2S-RS-1A=	RHEL Resilent Storage (1-2 CPU)
RHEL-2S-RS-3A=	RHEL Resilent Storage (1-2 CPU)
RHEL-2S-RS-5A=	RHEL Resilent Storage (1-2 CPU)
Red Hat SAP	

Table 30 Spare Parts

RHEL-SAP-2S2V-1S=	RHEL for SAP Apps (1-2 CPU, 1-2 VN); Prem 1-Yr SnS Reqd
RHEL-SAP-2S2V-3S=	RHEL for SAP Apps (1-2 CPU, 1-2 VN); Prem 3-Yr SnS Reqd
RHEL-SAPSP-3S=	RHEL SAP Solutions Premium - License with 3 Years of SnS
RHEL-SAPSS-3S=	RHEL SAP Solutions Standard - License with 3 Years of SnS
VMware	
VMW-VSP-STD-1A=	VMware vSphere 7 Std (1 CPU, 32 Core) 1-yr, Support Required
VMW-VSP-STD-3A=	VMware vSphere 7 Std (1 CPU, 32 Core) 3-yr, Support Required
VMW-VSP-STD-5A=	VMware vSphere 7 Std (1 CPU, 32 Core) 5-yr, Support Required
VMW-VSP-EPL-1A=	VMware vSphere 7 Ent Plus (1 CPU, 32 Core) 1Yr, Support Reqd
VMW-VSP-EPL-3A=	VMware vSphere 7 Ent Plus (1 CPU, 32 Core) 3Yr, Support Reqd
VMW-VSP-EPL-5A=	VMware vSphere 7 Ent Plus (1 CPU, 32 Core) 5Yr, Support Reqd
SLES and SAP	
SLES-SAP-2S2V-1A=	SLES for SAP Apps (1-2 CPU, 1-2 VM)
SLES-SAP-2S2V-3A=	SLES for SAP Apps (1-2 CPU, 1-2 VM)
SLES-SAP-2S2V-5A=	SLES for SAP Apps (1-2 CPU, 1-2 VM)
SLES-SAP-2S2V-1S=	SLES for SAP Apps (1-2 CPU, 1-2 VM)
SLES-SAP-2S2V-3S=	SLES for SAP Apps (1-2 CPU, 1-2 VM)
SLES-SAP-2S2V-5S=	SLES for SAP Apps (1-2 CPU, 1-2 VM)
SUSE	
SLES-2S2V-1A=	SUSE Linux Enterprise Svr (1-2 CPU,1-2 VM)
SLES-2S2V-3A=	SUSE Linux Enterprise Svr (1-2 CPU,1-2 VM)
SLES-2S2V-5A=	SUSE Linux Enterprise Svr (1-2 CPU,1-2 VM)
SLES-2S2V-1S=	SUSE Linux Enterprise Svr (1-2 CPU,1-2 VM)
SLES-2S2V-3S=	SUSE Linux Enterprise Svr (1-2 CPU,1-2 VM)
SLES-2S2V-5S=	SUSE Linux Enterprise Svr (1-2 CPU,1-2 VM)
SLES-2S-HA-1S=	SUSE Linux High Availability Ext (1-2 CPU)
SLES-2S-HA-3S=	SUSE Linux High Availability Ext (1-2 CPU)
SLES-2S-HA-5S=	SUSE Linux High Availability Ext (1-2 CPU)
SLES-2S-GC-1S=	SUSE Linux GEO Clustering for HA (1-2 CPU)
SLES-2S-GC-3S=	SUSE Linux GEO Clustering for HA (1-2 CPU)

Table 30 Spare Parts

SLES-2S-GC-5S=	SUSE Linux GEO Clustering for HA (1-2 CPU)
SLES-2S-LP-1S=	SUSE Linux Live Patching Add-on (1-2 CPU)
SLES-2S-LP-3S=	SUSE Linux Live Patching Add-on (1-2 CPU)

Notes:

1. NVMe drives require the following storage controller in the front mezzanine slot:

   UCSB-LSTOR-PT
2. For HDD or SSD drives to be in a RAID group, two identical HDDs or SSDs must be used in the group.
3. If HDD or SSD are in JBOD Mode, the drives do not need to be identical.

Please refer to the UCS B200 M5 Installation Guide for installation procedures.

UPGRADING or REPLACING CPUs

NOTE: Before servicing any CPU, do the following:

- Decommission and power off the server.
- Slide the B200 M5 out from its chassis.
- Remove the top cover.

To replace an existing CPU, follow these steps:

(1) Have the following tools and materials available for the procedure:

- T-30 Torx driver—Supplied with replacement CPU.
- #1 flat-head screwdriver—Supplied with replacement CPU.
- CPU assembly tool—Supplied with replacement CPU. Can be ordered separately as Cisco PID UCS-CPUAT=.
- Heatsink cleaning kit—Supplied with replacement CPU. Can be ordered separately as Cisco PID UCSX-HSCK=.
- Thermal interface material (TIM)—Syringe supplied with replacement CPU. Can be ordered separately as Cisco PID UCS-CPU-TIM=.

(2) Order the appropriate replacement CPU from *Available CPUs on page 10*.

(3) Carefully remove and replace the CPU and heatsink in accordance with the instructions found in "Cisco UCS B200 M5 Blade Server Installation and Service Note," found at:
https://www.cisco.com/c/en/us/td/docs/unified_computing/ucs/hw/blade-servers/B200M5/B200M5_chapter_011.html#id_104667.

To add a new CPU, follow these steps:

(1) Have the following tools and materials available for the procedure:

- T-30 Torx driver—Supplied with new CPU.
- #1 flat-head screwdriver—Supplied with new CPU
- CPU assembly tool—Supplied with new CPU.Can be ordered separately as Cisco PID UCS-CPUAT=
- Thermal interface material (TIM)—Syringe supplied with replacement CPU.Can be ordered separately as Cisco PID UCS-CPU-TIM=

(2) Order the appropriate new CPU from *Table 4 on page 10*.

(3) Order one heat sink for each new CPU. Order PID UCSB-HS-M5-F= for the front CPU socket and PID UCSB-HS-M5-R= for the rear CPU socket.

(4) Carefully install the CPU and heatsink in accordance with the instructions found in "Cisco UCS B200 M5 Blade Server Installation and Service Note," found at:
https://www.cisco.com/c/en/us/td/docs/unified_computing/ucs/hw/blade-servers/B200M5/B200M5_chapter_011.html#id_104667.

UPGRADING or REPLACING MEMORY

NOTE: Before servicing any DIMM or PMem, do the following:

- Decommission and power off the server.
- Remove the top cover from the server
- Slide the server out the front of the chassis.

To add or replace DIMMs or PMem, follow these steps:

(1) Order new DIMMs or PMem as needed from *Table 6 on page 16*.

(2) Order DIMM/PMem blanks as needed (PID UCS-DIMM-BLK=)

(3) Open both connector latches and remove and replace the DIMM/PMem or blank as needed.

Figure 6 Replacing Memory

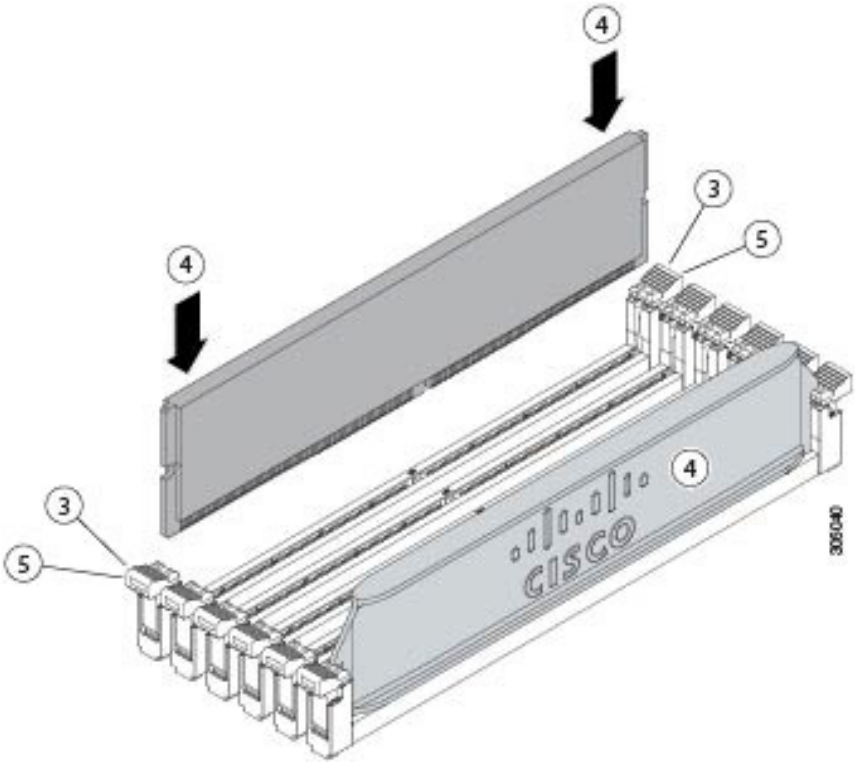

(4) Press evenly on both ends of the DIMM/PMem until it clicks into place in its slot.



NOTE: Ensure that the notch in the DIMM/PMem aligns with the slot. If the notch is misaligned, it is possible to damage the DIMM/PMem, the slot, or both.

(5) Press the connector latches inward slightly to seat them fully.

(6) Populate all slots with a DIMM, PMem, or DIMM blank. A slot cannot be empty.

For additional details on replacing or upgrading DIMMs, see "Cisco UCS B200 M5 Blade Server Installation and Service Note," found at https://www.cisco.com/c/en/us/td/docs/unified_computing/ucs/hw/blade-servers/B200M5/B200M5_chapter_011.html#concept_on5_vzl_kz.

DISCONTINUED EOL PRODUCTS

Below is the list of parts were previously available for this product and are no longer sold. Please refer to the EOL bulletin links shown in *Table 32* to determine if the part is still supported and if there is a replacement part.

Table 31 EOL Products

EOS option PID	Description	EOL Bulletin Link
DRIVES		
UCS-SD150GBKS4-EV	150 GB 2.5 inch Enterprise Value 6G SATA SSD	https://www.cisco.com/c/en/us/products/collateral/servers-unified-computing/ucs-c-series-rack-servers/eos-eol-notice-c51-740779.html
UCS-SD480GBKS4-EV	480 GB 2.5 inch Enterprise Value 6G SATA SSD	https://www.cisco.com/c/en/us/products/collateral/servers-unified-computing/ucs-c-series-rack-servers/eos-eol-notice-c51-740779.html
UCS-SD960GIKS4-EV	960GB 2.5 inch Enterprise Value 6G SATA SSD	https://www.cisco.com/c/en/us/products/collateral/servers-unified-computing/ucs-c-series-rack-servers/eos-eol-notice-c51-740779.html
UCS-SD16TBKS4-EV	1.6TB 2.5 inch Enterprise Value 6G SATA SSD	https://www.cisco.com/c/en/us/products/collateral/servers-unified-computing/ucs-c-series-rack-servers/eos-eol-notice-c51-740779.html
HX-SD480GBKSS-EV	480GB 2.5 in Enterprise Value 6G SATA SSD(1DWPD)-PM86	https://www.cisco.com/c/en/us/products/collateral/servers-unified-computing/ucs-b-series-blade-servers/eos-eol-notice-c51-742066.html
UCS-SD240GBKS4-EV	240GB 2.5 inch Enterprise Value 6G SATA SSD	https://www.cisco.com/c/en/us/products/collateral/servers-unified-computing/ucs-b-series-blade-servers/eos-eol-notice-c51-742066.html
UCS-SD480GBKSS-EV	480GB 2.5 in Enterprise Value 6G SATA SSD(1DWPD)-PM86	https://www.cisco.com/c/en/us/products/collateral/servers-unified-computing/ucs-b-series-blade-servers/eos-eol-notice-c51-742066.html
UCS-SD38T2HBNK9	3.8TB Enterprise value SAS SSD (1X DWPD, SED)	https://www.cisco.com/c/en/us/products/collateral/hyperconverged-infrastructure/hyperflex-hx-series/eos-eol-notice-c51-2451489.html
UCS-SD480GH1-EV	480 GB 2.5 inch Enterprise Value 12G SAS SSD (1X endurance)	https://www.cisco.com/c/en/us/products/collateral/servers-unified-computing/ucs-c-series-rack-servers/eos-eol-notice-c51-743832.html
UCS-HD12G10K9	1.2 TB 12G SAS 10K RPM SFF HDD (SED)	
UCS-SD19TH1-EV	1.9 TB 2.5 inch Enterprise Value 12G SAS SSD (1X endurance)	https://www.cisco.com/c/en/us/products/collateral/servers-unified-computing/ucs-c-series-rack-servers/eos-eol-notice-c51-743832.html
UCS-SD960GBHBNK9	960 GB Enterprise value SAS SSD (1X DWPD, SED) **FIPS 140-2**	https://www.cisco.com/c/en/us/products/collateral/servers-unified-computing/ucs-c-series-rack-servers/eos-eol-notice-c51-742823.html
UCS-SD38TH1-EV	3.8 TB 2.5 inch Enterprise Value 12G SAS SSD (1X endurance)	https://www.cisco.com/c/en/us/products/collateral/servers-unified-computing/ucs-c-series-rack-servers/eos-eol-notice-c51-743832.html

Table 31 EOL Products *(continued)*

EOS option PID	Description	EOL Bulletin Link
UCS-SD19TSAS-EV	1.9 TB 2.5 inch Enterprise Value 12G SAS SSD	https://www.cisco.com/c/en/us/products/collateral/hyperconverged-infrastructure/hyperflex-hx-series/eos-eol-notice-c51-2451489.html
UCS-SD960GSAS-EV	960 GB 2.5 inch Enterprise Value 12G SAS SSD (Toshiba PX05)	https://www.cisco.com/c/en/us/products/collateral/hyperconverged-infrastructure/hyperflex-hx-series/eos-eol-notice-c51-2451489.html
UCS-SD38TSAS-EV	3.8 TB 2.5 inch Enterprise Value 12G SAS SSD (Toshiba PX05)	https://www.cisco.com/c/en/us/products/collateral/hyperconverged-infrastructure/hyperflex-hx-series/eos-eol-notice-c51-2451489.html
UCS-SD960GH1-EV	960 GB 2.5 inch Enterprise Value 12G SAS SSD (1X endurance)	https://www.cisco.com/c/en/us/products/collateral/hyperconverged-infrastructure/hyperflex-hx-series/eos-eol-notice-c51-2451489.html
UCS-SD480GSAS-EV	480 GB 2.5 inch Enterprise Value 12G SAS SSD (Toshiba PX05)	https://www.cisco.com/c/en/us/products/collateral/hyperconverged-infrastructure/hyperflex-hx-series/eos-eol-notice-c51-2451489.html
UCS-SD16TBMS4-EV	1.6TB 2.5 inch Enterprise Value 6G SATA SSD	https://www.cisco.com/c/en/us/products/collateral/servers-unified-computing/ucs-c-series-rack-servers/unified-computing-accessories-eol.html
UCS-SD38TBMS4-EV	3.8TB 2.5 inch Enterprise Value 6G SATA SSD	https://www.cisco.com/c/en/us/products/collateral/servers-unified-computing/ucs-c-series-rack-servers/unified-computing-accessories-eol.html
UCS-SD960GBKS4-EV	960GB 2.5 inch Enterprise Value 6G SATA SSD	https://www.cisco.com/c/en/us/products/collateral/servers-unified-computing/ucs-c-series-rack-servers/select-ucs-hyperflex-accessories-eol2.html
UCS-SD480GBMS4-EV	480GB 2.5 inch Enterprise Value 6G SATA SSD	https://www.cisco.com/c/en/us/products/collateral/servers-unified-computing/ucs-c-series-rack-servers/unified-computing-accessories-eol.html
UCS-SD76TSB61X-EV	7.6TB 2.5 inch Enterprise Value 6G SATA SSD	https://www.cisco.com/c/en/us/products/collateral/servers-unified-computing/ucs-c-series-rack-servers/select-ucs-hyperflex-accessories-eol2.html
UCS-SD200G12S3-EP	200GB 2.5 inch Enterprise performance 6G SATA SSD(3 DWPD)	https://www.cisco.com/c/en/us/products/collateral/servers-unified-computing/ucs-c-series-rack-servers/eos-eol-notice-c51-739513.html
UCS-SD480G12S3-EP	480GB 2.5 inch Ent. Performance 6GSATA SSD(3X endurance)	https://www.cisco.com/c/en/us/products/collateral/servers-unified-computing/ucs-c-series-rack-servers/eos-eol-notice-c51-739513.html
UCS-SD800G12S3-EP	800GB 2.5 inch Enterprise performance 6G SATA SSD(3 DWPD)	https://www.cisco.com/c/en/us/products/collateral/servers-unified-computing/ucs-c-series-rack-servers/eos-eol-notice-c51-739513.html
UCS-SD16TB12S3-EP	1.6TB 2.5 inch Ent. Performance 6GSATA SSD(3X endurance)	https://www.cisco.com/c/en/us/products/collateral/servers-unified-computing/ucs-c-series-rack-servers/eos-eol-notice-c51-739513.html
UCS-SD400GH3-EP	400GB 2.5 inch Enterprise performance 12G SAS SSD (3X DWPD)	https://www.cisco.com/c/en/us/products/collateral/servers-unified-computing/ucs-c-series-rack-servers/eos-eol-notice-c51-739513.html
UCS-SD400G12S4-EP	400 GB 2.5 inch Ent Performance 12G SAS SSD (10X endurance) (SanDisk Lightning II)	https://www.cisco.com/c/en/us/products/collateral/servers-unified-computing/ucs-c-series-rack-servers/eos-eol-notice-c51-739513.html

Table 31 EOL Products *(continued)*

EOS option PID	Description	EOL Bulletin Link
UCS-SD800G12S4-EP	800 GB 2.5 inch Ent. Performance 12G SAS SSD (10X endurance) (Samsung 1635)	https://www.cisco.com/c/en/us/products/collateral/servers-unified-computing/ucs-c-series-rack-servers/eos-eol-notice-c51-741644.html
UCS-SD16TB12S4-EP	1.6 TB 2.5 inch Ent. Performance 12G SAS SSD (10X endurance) (SanDisk Lightning II)	https://www.cisco.com/c/en/us/products/collateral/servers-unified-computing/ucs-c-series-rack-servers/eos-eol-notice-c51-741644.html
UCS-SD800GH3-EP	800GB 2.5 inch Enterprise performance 12G SAS SSD (3X DWPD)	https://www.cisco.com/c/en/us/products/collateral/servers-unified-computing/ucs-c-series-rack-servers/eos-eol-notice-c51-743832.html
UCS-SD16TSASS3-EP	1.6TB 2.5 inch Enterprise performance 12G SAS SSD(3X endurance) (Toshiba PX05)	https://www.cisco.com/c/en/us/products/collateral/hyperconverged-infrastructure/hyperflex-hx-series/eos-eol-notice-c51-2451489.html
UCS-SD400GSAS3-EP	400 GB 2.5 inch Enterprise performance 12G SAS SSD(3X DWPD)	https://www.cisco.com/c/en/us/products/collateral/hyperconverged-infrastructure/hyperflex-hx-series/eos-eol-notice-c51-2451489.html
UCS-SD32TSASS3-EP	3.2 TB 2.5 inch Enterprise performance 12G SAS SSD(3X DWPD)	https://www.cisco.com/c/en/us/products/collateral/servers-unified-computing/ucs-c-series-rack-servers/eos-eol-notice-c51-741234.html
UCS-SD800GSAS3-EP	800GB 2.5 inch Enterprise performance 12G SAS SSD(3X endurance) (Toshiba PX05)	https://www.cisco.com/c/en/us/products/collateral/hyperconverged-infrastructure/hyperflex-hx-series/eos-eol-notice-c51-2451489.html
UCS-SD16TH3-EP	1.6TB 2.5 inch Enterprise performance 12G SAS SSD (3X DWPD)	https://www.cisco.com/c/en/us/products/collateral/servers-unified-computing/ucs-c-series-rack-servers/eos-eol-notice-c51-743832.html
UCS-SD32TH3-EP	3.2TB 2.5in Enterprise performance 12G SAS SSD (3X DWPD)	https://www.cisco.com/c/en/us/products/collateral/servers-unified-computing/ucs-c-series-rack-servers/eos-eol-notice-c51-743832.html
UCSB-NVMELW-I500	500GB 2.5in U.2 Intel P4501 NVMe Med. Perf. Value Endurance	https://www.cisco.com/c/en/us/products/collateral/servers-unified-computing/ucs-c-series-rack-servers/eos-eol-notice-c51-742509.html
UCSB-NVMEXP-I375	375GB 2.5in Intel Optane NVMe Extreme Perf	https://www.cisco.com/c/en/us/products/collateral/servers-unified-computing/ucs-c-series-rack-servers/eos-eol-notice-c51-742509.html
UCSB-NVMELW-I1000	Cisco 2.5" U.2 1 TB Intel P4501 NVMe Med. Perf. Value Endurance	https://www.cisco.com/c/en/us/products/collateral/servers-unified-computing/ucs-c-series-rack-servers/eos-eol-notice-c51-742509.html
UCSB-NVMEHW-I1000	Cisco 2.5" U.2 1 TB Intel P4500 NVMe High Perf. Value Endurance	https://www.cisco.com/c/en/us/products/collateral/servers-unified-computing/ucs-c-series-rack-servers/eos-eol-notice-c51-742509.html
UCSB-NVMELW-I2000	Cisco 2.5" U.2 2 TB Intel P4501 NVMe Med. Perf. Value Endurance	https://www.cisco.com/c/en/us/products/collateral/servers-unified-computing/ucs-c-series-rack-servers/eos-eol-notice-c51-742509.html
UCSB-NVMEHW-I2000	Cisco 2.5" U.2 2.0 TB Intel P4600 NVMe High Perf. High Endur (Intel)	https://www.cisco.com/c/en/us/products/collateral/servers-unified-computing/ucs-c-series-rack-servers/eos-eol-notice-c51-742823.html
UCSB-NVMEHW-I1600	Cisco 2.5" U.2 1.6 TB Intel P4600 NVMe High Perf. High Endurance	https://www.cisco.com/c/en/us/products/collateral/servers-unified-computing/ucs-c-series-rack-servers/eos-eol-notice-c51-742823.html

Table 31 EOL Products *(continued)*

EOS option PID	Description	EOL Bulletin Link
UCSB-NVMEHW-I4000	Cisco 2.5" U.2 4 TB Intel P4500 NVMe High Perf. Value Endurance	https://www.cisco.com/c/en/us/products/collateral/servers-unified-computing/ucs-c-series-rack-servers/eos-eol-notice-c51-742509.html
UCSB-NVME2H-I4000	Cisco 2.5" U.2 4.0TB Intel P4510 NVMe High Perf. Value Endu	https://www.cisco.com/c/en/us/products/collateral/servers-unified-computing/ucs-c-series-rack-servers/select-ucs-hyperflex-accessories-eol3.html
UCSB-NVMEHW-I2TBV	2TB 2.5in U.2 Intel P4500 NVMe High Perf Value Endurance	https://www.cisco.com/c/en/us/products/collateral/servers-unified-computing/ucs-c-series-rack-servers/eos-eol-notice-c51-742823.html
UCSB-NVME2H-I3200	Cisco 2.5" U.2 3.2TB Intel P4610 NVMe High Perf. High Endu	https://www.cisco.com/c/en/us/products/collateral/servers-unified-computing/ucs-c-series-rack-servers/select-ucs-hyperflex-accessories-eol3.html
UCSB-NVMEHW-I8000	8TB 2.5in U.2 Intel P4510 NVMe High Perf Value Endurance	https://www.cisco.com/c/en/us/products/collateral/servers-unified-computing/ucs-c-series-rack-servers/select-ucs-hyperflex-accessories-eol3.html
UCSB-NVMHG-W6400	6.4TB 2.5in U.2 WD SN840 NVMe Extreme Perf. High Endurance	https://www.cisco.com/c/en/us/products/collateral/servers-unified-computing/ucs-c-series-rack-servers/select-ucs-hyperflex-accessories-eol3.html
UCSB-NVMEHW-I3200	3.2TB 2.5in U.2 Intel P4600 NVMe High Perf High Endurance	https://www.cisco.com/c/en/us/products/collateral/servers-unified-computing/ucs-c-series-rack-servers/eos-eol-notice-c51-742823.html
UCSB-NVMEHW-H3200	3.2TB 2.5in U.2 HGST SN200 NVMe High Perf. High Endurance	https://www.cisco.com/c/en/us/products/collateral/hyperconverged-infrastructure/hyperflex-hx-series/eos-eol-notice-c51-2451489.html
UCSB-NVMEHW-H1600	Cisco 2.5" U.2 1.6 TB HGST SN200 NVMe High Perf. High Endurance	https://www.cisco.com/c/en/us/products/collateral/hyperconverged-infrastructure/hyperflex-hx-series/eos-eol-notice-c51-2451489.html
UCSB-NVMEHW-H6400	6.4TB 2.5in U.2 HGST SN200 NVMe High Perf. High Endurance	https://www.cisco.com/c/en/us/products/collateral/hyperconverged-infrastructure/hyperflex-hx-series/eos-eol-notice-c51-2451489.html
UCSB-NVMEHW-H7680	7.7TB 2.5in U.2 HGST SN200 NVMe High Perf. Value Endurance	https://www.cisco.com/c/en/us/products/collateral/hyperconverged-infrastructure/hyperflex-hx-series/eos-eol-notice-c51-2451489.html
UCSB-NVMEHW-H800	800GB 2.5in U.2 HGST SN200 NVMe High Perf. High Endurance	https://www.cisco.com/c/en/us/products/collateral/servers-unified-computing/ucs-c-series-rack-servers/eos-eol-notice-c51-2412151.html
UCS-SD960G2HBNK9	960GB Enterprise value SAS SSD (1X FWPD, SED)	https://www.cisco.com/c/en/us/products/collateral/hyperconverged-infrastructure/hyperflex-hx-series/eos-eol-notice-c51-2451489.html
UCSB-NVME2H-I1600	Cisco 2.5" U.2 1.6TB Intel P4610 NVMe High Perf. High Endu	https://www.cisco.com/c/en/us/products/collateral/hyperconverged-infrastructure/hyperflex-hx-series/eos-eol-notice-c51-2451489.html
UCSB-NVME2H-I2TBV	Cisco 2.5" U.2 2.0TB Intel P4510 NVMe High Perf. Value Endu	https://www.cisco.com/c/en/us/products/collateral/servers-unified-computing/ucs-c-series-rack-servers/select-ucs-hyperflex-accessories-eol3.html
UCS-SD480GBHBNK9	480GB Enterprise value SAS SSD (1X DWPD, SED)	https://www.cisco.com/c/en/us/products/collateral/servers-unified-computing/ucs-c-series-rack-servers/eos-eol-notice-c51-742823.html

Table 31 EOL Products *(continued)*

EOS option PID	Description	EOL Bulletin Link
UCS-SD38TBHBNK9	3.8TB Enterprise value SAS SSD (1X DWPD, SED)	https://www.cisco.com/c/en/us/products/collateral/servers-unified-computing/ucs-c-series-rack-servers/eos-eol-notice-c51-742823.html
UCS-SD480G2HBNK9	480GB Enterprise value SAS SSD (1X DWPD, SED) **FIPS 140-2**	https://www.cisco.com/c/en/us/products/collateral/servers-unified-computing/ucs-c-series-rack-servers/eos-eol-notice-c51-743832.html
UCS-M2-240GB	240GB M.2 SATA Micron G1 SSD	https://www.cisco.com/c/en/us/products/collateral/servers-unified-computing/ucs-c-series-rack-servers/unified-computing-accessories-eol.html
UCS-M2-960GB	960GB M.2 SATA Micron G1 SSD	https://www.cisco.com/c/en/us/products/collateral/servers-unified-computing/ucs-c-series-rack-servers/unified-computing-accessories-eol.html
UCS-MR-X16G2RS-H	16GB DDR4-2666-MHz RDIMM/PC4-21300/dual rank/x4/1.2v	https://www.cisco.com/c/en/us/products/collateral/servers-unified-computing/ucs-c-series-rack-servers/eos-eol-notice-c51-740780.html
UCS-MR-X16G1RT-H	16GB DDR4-2933MHz RDIMM 1Rx4 (8Gb)/1.2v	https://www.cisco.com/c/en/us/products/collateral/servers-unified-computing/ucs-c-series-rack-servers/ucs-hyperflex-accessories-eol14611.html
UCS-MR-X32G2RT-H	32GB DDR4-2933MHz RDIMM 2Rx4 (8Gb)/1.2v	https://www.cisco.com/c/en/us/products/collateral/servers-unified-computing/ucs-c-series-rack-servers/ucs-hyperflex-accessories-eol14611.html
UCS-MR-X64G2RT-H	64GB DDR4-2933MHz RDIMM 2Rx4 (16Gb)/1.2v	https://www.cisco.com/c/en/us/products/collateral/servers-unified-computing/ucs-c-series-rack-servers/ucs-hyperflex-accessories-eol14611.html
UCS-ML-X64G4RT-H	64GB DDR4-2933MHz LRDIMM 4Rx4 (8Gb)/1.2v	https://www.cisco.com/c/en/us/products/collateral/servers-unified-computing/ucs-c-series-rack-servers/ucs-hyperflex-accessories-eol14611.html
UCS-ML-128G4RT-H	128GB DDR4-2933MHz LRDIMM 4Rx4 (16Gb)/1.2v	https://www.cisco.com/c/en/us/products/collateral/servers-unified-computing/ucs-c-series-rack-servers/ucs-hyperflex-accessories-eol14611.html
UCS-ML-X64G4RS-H	64GB DDR4-2666-MHz LRDIMM/PC4-21300/quad rank/x4/1.2v	https://www.cisco.com/c/en/us/products/collateral/servers-unified-computing/ucs-c-series-rack-servers/eos-eol-notice-c51-2412151.html
UCS-ML-X32G2RS-H	32GB DDR4-2666-MHz LRDIMM/PC4-21300/dual rank/x4/1.2v	https://www.cisco.com/c/en/us/products/collateral/servers-unified-computing/ucs-c-series-rack-servers/eos-eol-notice-c51-2412151.html
UCS-ML-X32G2RSHM	32GB DDR4-2666-MHz LRDIMM/dual rank/x4/1.2v. Micron only	https://www.cisco.com/c/en/us/products/collateral/servers-unified-computing/ucs-c-series-rack-servers/eos-eol-notice-c51-2412151.html
UCS-ML-X64G4RS-H	64GB DDR4-2666-MHz LRDIMM/PC4-21300/quad rank/x4/1.2v	https://www.cisco.com/c/en/us/products/collateral/servers-unified-computing/ucs-c-series-rack-servers/eos-eol-notice-c51-2412151.html

Table 31 EOL Products *(continued)*

EOS option PID	Description	EOL Bulletin Link
UCS-ML-X64G4RSHM	64GB DDR4-2666-MHz LRDIMM/quad rank/x4/1.2v. Micron only	https://www.cisco.com/c/en/us/products/collateral/servers-unified-computing/ucs-c-series-rack-servers/eos-eol-notice-c51-2412151.html
UCS-ML-X64G4RSHS	64GB DDR4-2666-MHz LRDIMM/quad rank/x4/1.2v. Samsung only	https://www.cisco.com/c/en/us/products/collateral/servers-unified-computing/ucs-c-series-rack-servers/eos-eol-notice-c51-2412151.html
UCS-MR-128G8RS-H	128GB DDR4-2666-MHz TSV-RDIMM/PC4-21300/octal rank/x4/1.2v	https://www.cisco.com/c/en/us/products/collateral/servers-unified-computing/ucs-c-series-rack-servers/eos-eol-notice-c51-2412151.html
UCS-MR-X16G1RS-H	16GB DDR4-2666-MHz RDIMM/PC4-21300/single rank/x4/1.2v	https://www.cisco.com/c/en/us/products/collateral/servers-unified-computing/ucs-c-series-rack-servers/eos-eol-notice-c51-2412151.html
UCS-MR-X16G1RSHM	16GB DDR4-2666-MHz RDIMM/single rank/x4/1.2v. Micron only	https://www.cisco.com/c/en/us/products/collateral/servers-unified-computing/ucs-c-series-rack-servers/eos-eol-notice-c51-2412151.html
UCS-MR-X32G2RS-H	32GB DDR4-2666-MHz RDIMM/PC4-21300/dual rank/x4/1.2v	https://www.cisco.com/c/en/us/products/collateral/servers-unified-computing/ucs-c-series-rack-servers/eos-eol-notice-c51-2412151.html
UCS-MR-X32G2RSHM	32GB DDR4-2666-MHz RDIMM/dual rank/x4/1.2v. Micron only	https://www.cisco.com/c/en/us/products/collateral/servers-unified-computing/ucs-c-series-rack-servers/eos-eol-notice-c51-2412151.html
UCS-MR-X32G2RSHS	32GB DDR4-2666-MHz RDIMM/dual rank/x4/1.2v. Samsung only	https://www.cisco.com/c/en/us/products/collateral/servers-unified-computing/ucs-c-series-rack-servers/eos-eol-notice-c51-2412151.html
UCS-MR-X64G4RS-H	64GB DDR4-2666-MHz TSV-RDIMM/PC4-21300/quad	https://www.cisco.com/c/en/us/products/collateral/servers-unified-computing/ucs-c-series-rack-servers/eos-eol-notice-c51-2412151.html
CPU		
UCS-CPU-I8280M	Intel 8280M 2.7GHz/205W 28C/38.50MB 3DX DDR4 2TB 2933 MHz	https://www.cisco.com/c/en/us/products/collateral/servers-unified-computing/ucs-c-series-rack-servers/eos-eol-notice-c51-743832.html
UCS-CPU-I8276M	Intel 8276M 2.2GHz/165W 28C/38.50MB 3DX DDR4 2TB 2933 MHz	https://www.cisco.com/c/en/us/products/collateral/servers-unified-computing/ucs-c-series-rack-servers/eos-eol-notice-c51-743832.html
UCS-CPU-I8260M	Intel 8260M 2.4GHz/165W 24C/35.75MB 3DX DDR4 2TB 2933 MHz	https://www.cisco.com/c/en/us/products/collateral/servers-unified-computing/ucs-c-series-rack-servers/eos-eol-notice-c51-743832.html
UCS-CPU-I5215M	Intel 5215M 2.5GHz/85W 10C/13.75MB DCP DDR4 2TB 2666MHz	https://www.cisco.com/c/en/us/products/collateral/servers-unified-computing/ucs-c-series-rack-servers/eos-eol-notice-c51-743832.html
UCS-CPU-I6238M	Intel 6238M 2.1GHz/140W 22C/30.25MB DCP DDR4 2TB 2933 MHz	https://www.cisco.com/c/en/us/products/collateral/servers-unified-computing/ucs-c-series-rack-servers/eos-eol-notice-c51-743832.html
UCS-CPU-I6240M	Intel 6240M 2.6GHz/150W 18C/24.75MB DCP DDR4 2TB 2933 MHz	https://www.cisco.com/c/en/us/products/collateral/servers-unified-computing/ucs-c-series-rack-servers/eos-eol-notice-c51-743832.html

Table 31 EOL Products *(continued)*

EOS option PID	Description	EOL Bulletin Link
UCS-CPU-8180M	2.5 GHz 8180M/205W 28C/38.50MB Cache/DDR4 2666MHz	https://www.cisco.com/c/en/us/products/collateral/servers-unified-computing/ucs-c-series-rack-servers/eos-eol-notice-c51-744580.html
UCS-CPU-8176M	2.1 GHz 8176M/165W 28C/38.50MB Cache/DDR4 2666MHz	https://www.cisco.com/c/en/us/products/collateral/servers-unified-computing/ucs-c-series-rack-servers/eos-eol-notice-c51-744580.html
UCS-CPU-8170M	2.1 GHz 8170M/165W 26C/35.75MB Cache/DDR4 2666MHz	https://www.cisco.com/c/en/us/products/collateral/servers-unified-computing/ucs-c-series-rack-servers/eos-eol-notice-c51-744580.html
UCS-CPU-8160M	2.1 GHz 8160M/150W 24C/33MB Cache/DDR4 2666MHz	https://www.cisco.com/c/en/us/products/collateral/servers-unified-computing/ucs-c-series-rack-servers/eos-eol-notice-c51-744580.html
UCS-CPU-8180	2.5 GHz 8180/205W 28C/38.50MB Cache/DDR4 2666MHz	https://www.cisco.com/c/en/us/products/collateral/servers-unified-computing/ucs-c-series-rack-servers/eos-eol-notice-c51-744580.html
UCS-CPU-8176	2.1 GHz 8176/165W 28C/38.50MB Cache/DDR4 2666MHz	https://www.cisco.com/c/en/us/products/collateral/servers-unified-computing/ucs-c-series-rack-servers/eos-eol-notice-c51-744580.html
UCS-CPU-8170	2.1 GHz 8170/165W 26C/35.75MB Cache/DDR4 2666MHz	https://www.cisco.com/c/en/us/products/collateral/servers-unified-computing/ucs-c-series-rack-servers/eos-eol-notice-c51-744580.html
UCS-CPU-8168	2.7 GHz 8168/205W 24C/33MB Cache/DDR4 2666MHz	https://www.cisco.com/c/en/us/products/collateral/servers-unified-computing/ucs-c-series-rack-servers/eos-eol-notice-c51-744580.html
UCS-CPU-8164	2.0 GHz 8164/150W 26C/35.75MB Cache/DDR4 2666MHz	https://www.cisco.com/c/en/us/products/collateral/servers-unified-computing/ucs-c-series-rack-servers/eos-eol-notice-c51-744580.html
UCS-CPU-8160T	2.1 GHz 8160/150W 24C/33MB Cache/DDR4 2666MHz	https://www.cisco.com/c/en/us/products/collateral/servers-unified-computing/ucs-c-series-rack-servers/eos-eol-notice-c51-744580.html
UCS-CPU-8160	2.1 GHz 8160/150W 24C/33MB Cache/DDR4 2666MHz	https://www.cisco.com/c/en/us/products/collateral/servers-unified-computing/ucs-c-series-rack-servers/eos-eol-notice-c51-744580.html
UCS-CPU-8158	3.0 GHz 8158/150W 12C/24.75MB Cache/DDR4 2666MHz	https://www.cisco.com/c/en/us/products/collateral/servers-unified-computing/ucs-c-series-rack-servers/eos-eol-notice-c51-744580.html
UCS-CPU-8156	3.6 GHz 8156/105W 4C/16.50MB Cache/DDR4 2666MHz	https://www.cisco.com/c/en/us/products/collateral/servers-unified-computing/ucs-c-series-rack-servers/eos-eol-notice-c51-744580.html
UCS-CPU-8153	2.0 GHz 8153/125W 16C/22MB Cache/DDR4 2666MHz	https://www.cisco.com/c/en/us/products/collateral/servers-unified-computing/ucs-c-series-rack-servers/eos-eol-notice-c51-744580.html
UCS-CPU-6142M	2.6 GHz 6142M/150W 16C/22MB Cache/DDR4 2666MHz	https://www.cisco.com/c/en/us/products/collateral/servers-unified-computing/ucs-c-series-rack-servers/eos-eol-notice-c51-744580.html
UCS-CPU-6140M	2.3 GHz 6140M/140W 18C/24.75MB Cache/DDR4 2666MHz	https://www.cisco.com/c/en/us/products/collateral/servers-unified-computing/ucs-c-series-rack-servers/eos-eol-notice-c51-744580.html

Table 31 EOL Products *(continued)*

EOS option PID	Description	EOL Bulletin Link
UCS-CPU-6134M	3.2 GHz 6134M/130W 8C/24.75MB Cache/DDR4 2666MHz	https://www.cisco.com/c/en/us/products/collateral/servers-unified-computing/ucs-c-series-rack-servers/eos-eol-notice-c51-744580.html
UCS-CPU-6154	3.0 GHz 6154/**200W** 18C/24.75MB Cache/DDR4 2666MHz	https://www.cisco.com/c/en/us/products/collateral/servers-unified-computing/ucs-c-series-rack-servers/eos-eol-notice-c51-744580.html
UCS-CPU-6152	2.1 GHz 6152/140W 22C/30.25MB Cache/DDR4 2666MHz	https://www.cisco.com/c/en/us/products/collateral/servers-unified-computing/ucs-c-series-rack-servers/eos-eol-notice-c51-744580.html
UCS-CPU-6150	2.7 GHz 6150/**165W** 18C/24.75MB Cache/DDR4 2666MHz	https://www.cisco.com/c/en/us/products/collateral/servers-unified-computing/ucs-c-series-rack-servers/eos-eol-notice-c51-744580.html
UCS-CPU-6148	2.4 GHz 6148/150W 20C/27.50MB Cache/DDR4 2666MHz	https://www.cisco.com/c/en/us/products/collateral/servers-unified-computing/ucs-c-series-rack-servers/eos-eol-notice-c51-744580.html
UCS-CPU-6144	3.5 GHz 6144/150W 8C/24.75MB Cache/DDR4 2666MHz	https://www.cisco.com/c/en/us/products/collateral/servers-unified-computing/ucs-c-series-rack-servers/eos-eol-notice-c51-744580.html
UCS-CPU-6142	2.6 GHz 6142/150W 16C/22MB Cache/DDR4 2666MHz	https://www.cisco.com/c/en/us/products/collateral/servers-unified-computing/ucs-c-series-rack-servers/eos-eol-notice-c51-744580.html
UCS-CPU-6140	2.3 GHz 6140/140W 18C/24.75MB Cache/DDR4 2666MHz	https://www.cisco.com/c/en/us/products/collateral/servers-unified-computing/ucs-c-series-rack-servers/eos-eol-notice-c51-744580.html
UCS-CPU-6138T	2.0 GHz 6138T/125W 20C/27.5MB Cache/DDR4 2666MHz	https://www.cisco.com/c/en/us/products/collateral/servers-unified-computing/ucs-c-series-rack-servers/eos-eol-notice-c51-744580.html
UCS-CPU-6138	2.0 GHz 6138/125W 20C/27.50MB Cache/DDR4 2666MHz	https://www.cisco.com/c/en/us/products/collateral/servers-unified-computing/ucs-c-series-rack-servers/eos-eol-notice-c51-744580.html
UCS-CPU-6136	3.0 GHz 6136/150W 12C/24.75MB Cache/DDR4 2666MHz	https://www.cisco.com/c/en/us/products/collateral/servers-unified-computing/ucs-c-series-rack-servers/eos-eol-notice-c51-744580.html
UCS-CPU-6134	3.2 GHz 6134/130W 8C/24.75MB Cache/DDR4 2666MHz	https://www.cisco.com/c/en/us/products/collateral/servers-unified-computing/ucs-c-series-rack-servers/eos-eol-notice-c51-744580.html
UCS-CPU-6132	2.6 GHz 6132/140W 14C/19.25MB Cache/DDR4 2666MHz	https://www.cisco.com/c/en/us/products/collateral/servers-unified-computing/ucs-c-series-rack-servers/eos-eol-notice-c51-744580.html
UCS-CPU-6130	2.1 GHz 6130/125W 16C/22MB Cache/DDR4 2666MHz	https://www.cisco.com/c/en/us/products/collateral/servers-unified-computing/ucs-c-series-rack-servers/eos-eol-notice-c51-744580.html
UCS-CPU-6128	3.4 GHz 6128/115W 6C/19.25MB Cache/DDR4 2666MHz	https://www.cisco.com/c/en/us/products/collateral/servers-unified-computing/ucs-c-series-rack-servers/eos-eol-notice-c51-744580.html
UCS-CPU-6126	2.6 GHz 6126/125W 12C/19.25MB Cache/DDR4 2666MHz	https://www.cisco.com/c/en/us/products/collateral/servers-unified-computing/ucs-c-series-rack-servers/eos-eol-notice-c51-744580.html

Table 31 EOL Products *(continued)*

EOS option PID	Description	EOL Bulletin Link
UCS-CPU-5122	3.6 GHz 5122/105W 4C/16.50MB Cache/DDR4 2666MHz	https://www.cisco.com/c/en/us/products/collateral/servers-unified-computing/ucs-c-series-rack-servers/eos-eol-notice-c51-744580.html
UCS-CPU-5120	2.2 GHz 5120/105W 14C/19.25MB Cache/DDR4 2400MHz	https://www.cisco.com/c/en/us/products/collateral/servers-unified-computing/ucs-c-series-rack-servers/eos-eol-notice-c51-744580.html
UCS-CPU-5118	2.3 GHz 5118/105W 12C/16.50MB Cache/DDR4 2400MHz	https://www.cisco.com/c/en/us/products/collateral/servers-unified-computing/ucs-c-series-rack-servers/eos-eol-notice-c51-744580.html
UCS-CPU-5117	2.0 GHz 5117/105W 14C/19.25MB Cache/DDR4 2400MHz	https://www.cisco.com/c/en/us/products/collateral/servers-unified-computing/ucs-c-series-rack-servers/eos-eol-notice-c51-744580.html
UCS-CPU-5115	2.4 GHz 5115/85W 10C/13.75MB Cache/DDR4 2400MHz	https://www.cisco.com/c/en/us/products/collateral/servers-unified-computing/ucs-c-series-rack-servers/eos-eol-notice-c51-744580.html
UCS-CPU-4116	2.1 GHz 4116/85W 12C/16.50MB Cache/DDR4 2400MHz	https://www.cisco.com/c/en/us/products/collateral/servers-unified-computing/ucs-c-series-rack-servers/eos-eol-notice-c51-744580.html
UCS-CPU-4114	2.2 GHz 4114/85W 10C/13.75MB Cache/DDR4 2400MHz	https://www.cisco.com/c/en/us/products/collateral/servers-unified-computing/ucs-c-series-rack-servers/eos-eol-notice-c51-744580.html
UCS-CPU-4112	2.6 GHz 4112/85W 4C/8.25MB Cache/DDR4 2400MHz	https://www.cisco.com/c/en/us/products/collateral/servers-unified-computing/ucs-c-series-rack-servers/eos-eol-notice-c51-744580.html
UCS-CPU-4110	2.1 GHz 4110/85W 8C/11MB Cache/DDR4 2400MHz	https://www.cisco.com/c/en/us/products/collateral/servers-unified-computing/ucs-c-series-rack-servers/eos-eol-notice-c51-744580.html
UCS-CPU-4108	1.8 GHz 4108/85W 8C/11MB Cache/DDR4 2400MHz	https://www.cisco.com/c/en/us/products/collateral/servers-unified-computing/ucs-c-series-rack-servers/eos-eol-notice-c51-744580.html
UCS-CPU-3106	1.7 GHz 3106/85W 8C/11MB Cache/DDR4 2133MHz	https://www.cisco.com/c/en/us/products/collateral/servers-unified-computing/ucs-c-series-rack-servers/eos-eol-notice-c51-744580.html
UCS-CPU-3104	1.7 GHz 3104/85W 6C/8.25MB Cache/DDR4 2133MHz	https://www.cisco.com/c/en/us/products/collateral/servers-unified-computing/ucs-c-series-rack-servers/eos-eol-notice-c51-744580.html
UCS-CPU-I3204	Intel 3204 1.9GHz/85W 6C/8.25MB DDR4 2133MHz	https://www.cisco.com/c/en/us/products/collateral/servers-unified-computing/ucs-c-series-rack-servers/select-ucs-accessories-eol.html
UCS-CPU-I4214Y	Intel 4214Y SS 2.2GHz/85W 12/10/8C 16.75MB DDR4 2400MHz	https://www.cisco.com/c/en/us/products/collateral/servers-unified-computing/ucs-c-series-rack-servers/select-ucs-accessories-eol.html
UCS-CPU-I6250	Intel 6250 3.9GHz/185W 8C/35.75MB PMM DDR4 1TB 2933 MHz	https://www.cisco.com/c/en/us/products/collateral/servers-unified-computing/ucs-c-series-rack-servers/select-ucs-accessories-eol.html
UCS-CPU-I6252N	Intel 6252N 2.3GHz/150W 24C/35.75MB DCP DDR4 2933 MHz	https://www.cisco.com/c/en/us/products/collateral/servers-unified-computing/ucs-c-series-rack-servers/select-ucs-accessories-eol.html

Table 31 EOL Products *(continued)*

EOS option PID	Description	EOL Bulletin Link
MEZZANINE ADAPTERS		
UCSB-F-H32003	UCS Blade PCIe/NVMe Storage Mezz 3200GB Medium Endurance	https://www.cisco.com/c/en/us/products/collateral/servers-unified-computing/ucs-c-series-rack-servers/eos-eol-notice-c51-739513.html
UCSB-F-H5607	UCS Blade PCIe/NVMe Storage Mezz 560GB High Endurance	https://www.cisco.com/c/en/us/products/collateral/servers-unified-computing/ucs-c-series-rack-servers/eos-eol-notice-c51-739513.html
Microsoft Windows server		
MSWS-16-ST16C	Windows Server 2016 Standard (16 Cores/2 VMs)	https://www.cisco.com/c/en/us/products/servers-unified-computing/ucs-c-series-rack-servers/eos-eol-notice-c51-743145.html
MSWS-16-ST24C	Windows Server 2016 Standard (24 Cores/2 VMs)	https://www.cisco.com/c/en/us/products/servers-unified-computing/ucs-c-series-rack-servers/eos-eol-notice-c51-743145.html
MSWS-16-ST16C-NS	Windows Server 2016 Standard (16 Cores/2 VMs) - No Cisco SVC	https://www.cisco.com/c/en/us/products/servers-unified-computing/ucs-c-series-rack-servers/eos-eol-notice-c51-743145.html
MSWS-16-ST24C-NS	Windows Server 2016 Standard (24 Cores/2 VMs) - No Cisco SVC	https://www.cisco.com/c/en/us/products/servers-unified-computing/ucs-c-series-rack-servers/eos-eol-notice-c51-743145.html
MSWS-16-DC16C	Windows Server 2016 Data Center (16 Cores/Unlimited VMs)	https://www.cisco.com/c/en/us/products/servers-unified-computing/ucs-c-series-rack-servers/eos-eol-notice-c51-743145.html
MSWS-16-DC24C	Windows Server 2016 Data Center (24 Cores/Unlimited VMs)	https://www.cisco.com/c/en/us/products/servers-unified-computing/ucs-c-series-rack-servers/eos-eol-notice-c51-743145.html
MSWS-16-DC16C-NS	Windows Server 2016 DC (16 Cores/Unlim VMs) - No Cisco SVC	https://www.cisco.com/c/en/us/products/servers-unified-computing/ucs-c-series-rack-servers/eos-eol-notice-c51-743145.html
MSWS-16-DC24C-NS	Windows Server 2016 DC (24 Cores/Unlim VMs) - No Cisco SVC	https://www.cisco.com/c/en/us/products/servers-unified-computing/ucs-c-series-rack-servers/eos-eol-notice-c51-743145.html
OS Media		
MSWS-16-ST16C-RM	Windows Server 2016 Std (16 Cores/2 VMs) - Recovery Media	https://www.cisco.com/c/en/us/products/servers-unified-computing/ucs-c-series-rack-servers/eos-eol-notice-c51-743145.html
MSWS-16-ST24C-RM	Windows Server 2016 Std (24 Cores/2 VMs) - Recovery Media	https://www.cisco.com/c/en/us/products/servers-unified-computing/ucs-c-series-rack-servers/eos-eol-notice-c51-743145.html
MSWS-16-DC16C-RM	Windows Server 2016 DC (16 Cores/Unlim VMs) - Recovery Media	https://www.cisco.com/c/en/us/products/servers-unified-computing/ucs-c-series-rack-servers/eos-eol-notice-c51-743145.html
MSWS-16-DC24C-RM	Windows Server 2016 DC (24 Cores/Unlim VMs) - Recovery Media	https://www.cisco.com/c/en/us/products/servers-unified-computing/ucs-c-series-rack-servers/eos-eol-notice-c51-743145.html
UCSM Software		

Table 31 EOL Products *(continued)*

EOS option PID	Description	EOL Bulletin Link
N20-FW015	UCS 5108 Blade Chassis FW Package 3.2(2)	https://www.cisco.com/c/en/us/products/collateral/servers-unified-computing/ucs-manager/eos-eol-notice-c51-743144.html
N20-FW016	UCS 5108 Blade Chassis FW Package 4.0	https://www.cisco.com/c/en/us/products/collateral/servers-unified-computing/ucs-manager/ucs-manager-release-4-0-eol.html
GPUs		
UCSB-GPU-P6-F	NVIDIA GRID P6 Front Mezzanine	https://www.cisco.com/c/en/us/products/collateral/servers-unified-computing/ucs-c-series-rack-servers/hyperflex-accessories-eol.html
UCSB-GPU-P6-R	NVIDIA GRID P6 Rear Mezzanine	https://www.cisco.com/c/en/us/products/collateral/servers-unified-computing/ucs-c-series-rack-servers/hyperflex-accessories-eol.html

TECHNICAL SPECIFICATIONS

Dimensions and Weight

Table 32 UCS B200 M5 Dimensions and Weight

Parameter	Value
Height	1.95 in. (50 mm)
Width	8.00 in.(203 mm)
Depth	24.4 in. (620 mm)
Weight	■ Base server weight = 9.51 lbs (4.31 kg) (no HDDs, no CPUs, no DIMMs, no mezzanine adapters or memory) ■ Minimally configured server weight = 11.29 lbs (5.12 kg) (no HDDs, 1 CPU, 8 DIMMs, VIC 1340 but no additional mezzanine adapter) ■ Fully configured server weight = 16 lbs (7.25 kg) (2 HDDs, 2 CPUs, 24 DIMMs, VIC 1340 and additional mezzanine adapter both populated)

Power Specifications

For configuration-specific power specifications, use the Cisco UCS Power Calculator at:

http://ucspowercalc.cisco.com

NOTE: When using 256 GB DDR DIMMs (UCS-ML-256G8RT-H) in this server, the blade-level power capping must be set to 550 W. For information about blade-level power capping, see the Power Capping and Power Management chapter in the Cisco UCS Manager Server Management Guide for your release: Cisco UCS Manager Configuration Guides

Americas Headquarters
Cisco Systems, Inc.
San Jose, CA

Asia Pacific Headquarters
Cisco Systems (USA) Pte. Ltd.
Singapore

Europe Headquarters
Cisco Systems International BV Amsterdam,
The Netherlands

Cisco has more than 200 offices worldwide. Addresses, phone numbers, and fax numbers are listed on the Cisco Website at **www.cisco.com/go/offices.**

Cisco and the Cisco Logo are trademarks of Cisco Systems, Inc. and/or its affiliates in the U.S. and other countries. A listing of Cisco's trademarks can be found at www.cisco.com/go/trademarks. Third party trademarks mentioned are the property of their respective owners. The use of the word partner does not imply a partnership relationship between Cisco and any other company. (1005R)