Cisco Webex

The bridge to possible

Cisco Webex Room 70 G2

© 2021 Cisco and/or its affiliates. All rights reserved.

Contents

Cisco Webex Room 70 G2 overview 3

Features and benefits 4

Cisco Webex Room 70 G2 registration 5

Product specifications 5

Regulatory compliance 11

Standards 11

Ordering information 11

Warranty information 12

Cisco environmental sustainability 12

Cisco services and support 13

Cisco Capital 13

For more information 13

© 2021 Cisco and/or its affiliates. All rights reserved.

Cisco Webex Room 70 G2 is the flagship video collaboration product within the Cisco Webex Room Series portfolio. These fully integrated systems combine beautiful design and powerful functionality into an all-in-one solution for medium-to-large rooms. In its second generation, the Room 70 G2 features a more powerful engine to build more complex and specialized video scenarios. Room 70 G2 will transform your meeting spaces into a video collaboration hub—whether for connecting teams across the world or for local meetings.

The Room 70 G2 is available in two configurations:

- Room 70 Single G2 (70S G2) with one 70-inch LED screen for a people-focused experience
- Room 70 Dual G2 (70D G2) with two 70-inch LED screens for a people-focused and people/content-focused experience

Cisco Webex Room 70 G2 overview



Figure 1.
Cisco Webex Room 70 Dual G2 and Room 70 Single G2 on a free-standing floor stand

Cisco Webex® Room 70 G2 delivers the industry-leading video and audio experience customers have come to expect from Cisco. In addition, new capabilities enable even smarter meetings, smarter presentation capabilities, and smarter room and device integrations – further removing the barriers to usage and deployment of video in large-sized rooms. The Room 70 G2 is built on the powerful Cisco® Webex Room Kit Pro technology platform. This means there are more inputs and outputs to cover more meeting scenarios and larger rooms by adding another screen for content or installing a Cisco TelePresence® Precision 60 Camera in the back to give presenters flexibility to move around. The Room 70 G2 now offers more power and flexibility to build custom and more specialized video conference rooms than ever before.

The Room 70 G2 – comprising a powerful codec, a quad camera, and 70-inch single or dual 4K displays with integrated speakers and microphones* – is ideal for rooms that seat up to 14 people. It offers sophisticated camera technologies that bring speaker-tracking and auto-framing capabilities to medium to large-sized rooms. The product is rich in functionality and experience, and designed to be easily scalable to all of your large conference rooms and spaces, whether registered on the premises or to Cisco Webex through the Cisco Collaboration Cloud.

* Integrated microphones for speaker tracking only

© 2021 Cisco and/or its affiliates. All rights reserved.

Features and benefits

Table 1 outlines key features and benefits of the Room 70 G2.

Table 1. Webex Room 70 G2 features and benefits

Feature	Benefits
Design features	• One of the most powerful and feature-rich video systems available with the ultimate in video and audio quality • The next-generation UHD (4K) video collaboration codec • The next-generation HD fully automatic camera • Everything you need in one unit (screens, speakers, codec, camera, touch user interface, microphones, mounting) • Wall-mount or floor stand (2 floor stand options included: Freestanding and wall-secured floor stand) • Standards-compliant 1080p and 2160p solution - compatible with standards-based video without losing features
Smart meetings	• Brings intelligent views to medium to large-sized rooms with discreet, integrated cameras ◦ Best overview: Automatically detects meeting participants and provides ideal framing ◦ Speaker tracking: Detects and switches between active speakers and provides ideal framing • Great audio experience with integrated speakers and external microphones • Automatic wake-up: System “wakes up” when someone walks into the room, and recognizes them through their mobile device • Easily controlled by the Cisco Webex Room Navigator or with a Cisco Webex ™ app-enabled device • Supports switched conferencing for enhanced layouts and enabling video on multiple screens • Participate in Webex whiteboarding sessions from the Webex app; receive on-screen notification of shared whiteboard content (supported on cloud-registered devices) • Embedded MultiSite for conferencing with up to 5 participants • HD collaboration with 1080p60 video and 2160p15 content • Simplified meeting-join experience with One Button To Push (OBTP) • End-to-end security
Smart presentations	• Supports up to three screens for video and content • Supports dual content sources for local meetings • 4K content sharing (local 30 fps; remote 15 fps) • Wired or wireless content sharing (supports Cisco Intelligent Proximity for content sharing to mobile devices and wireless sharing from Macs and PCs
Smart integrations	• Metrics: Counts people in the room, enabling analytics for better resource planning • Supports Wi-Fi • Easily control room peripherals such as lights, room dividers, and curtains, directly from the Cisco Webex Room Navigator control unit through customizable API2 (requires external third-party control system processor)
Performance features	• Optimal definition up to 1080p60 • H.323/SIP up to 6 Mbps point to point • Up to 15 Mbps total MultiSite bandwidth • 6 simultaneous video inputs - three 4K and three full HD • Connect up to 8 microphones directly to the codec • Full duplex audio with high-quality stereo sound • Full Application Programming Interfaces (APIs) • Cisco Media Assure packet loss protection (Cisco ClearPath also supported)

© 2021 Cisco and/or its affiliates. All rights reserved.

Feature	Benefits
Built for cloud and premises	• Flexibility to register on the premises or to the cloud through Webex • Hardware is optimized to run on a cloud platform for great experiences in shared rooms and spaces with easy access to hosted conferences

Bringing more intelligence to medium to large-sized rooms

The Cisco Webex Room 70 G2 is video innovation in an easy-to-install all-in-one unit, bringing more intelligence and usability to your medium to large-sized team collaboration rooms. While other vendors struggle to insert advanced features such as speaker tracking, wireless sharing, and 4K content into their high-end products, Cisco is already proliferating these innovations to meeting rooms of all sizes in a cost-effective and simple way. With the Room 70 G2, Cisco helps customers experience smarter meetings, enable smarter presentations, and create smarter room and device integrations. And when registered to Webex in the cloud, additional cloud-based functionalities are enabled that enhance the user experience and team workflow as well as further simplify deployment.

- **Smart meetings:** Powerful, integrated cameras deliver intelligent view capabilities, such as automatic framing and speaker tracking; automatic noise suppression reduces meeting disruptions.
- **Smart presentations:** Room 70 G2 supports up to three screens, dual content sources, wireless sharing, and 4K content for great presentations.
- **Smart integrations:** People count for usage metrics and resource allocation; tight integrations with screens enhance user interactions; APIs and macros allow for meeting personalization.
- **Registration flexibility:** Room 70 G2 is built for both cloud and on-premises deployment, protecting your investment.

Cisco Webex Room 70 G2 registration

Table 2. Available licenses and terms

License level	Term
Cisco Webex Device Subscription	Monthly or 1-, 2-, 3-, 4-, or 5-year options

Product specifications

Table 3. Specifications

Specification	Description
Software compatibility	• Cisco Collaboration Endpoint Software Version 9.14.5 or later, or Cisco Webex RoomOS
Default components in Webex Room 70 G2	• Cisco Webex Codec Pro for Room 70 G2 • Cisco Webex Quad Camera • Loudspeakers • Cisco Webex Room Navigator control unit • Mounting option – Floor stand or wall mount • 2x Cisco Table Microphone (with Euro block plug) • 2x presentation cable (HDMI – HDMI), LAN cable, and power cable

© 2021 Cisco and/or its affiliates. All rights reserved.

Specification	Description	
Displays	Cisco Webex Room 70S G2 • 70-inch TFT-LCD monitor, edge-lit LED • Resolution: 3840 x 2160 (16:9) • Contrast ratio: Typical 4000:1 • Viewing angle: ◦ +/- 88 degrees (typical) ◦ +/- 70 degrees (minimum) • Response time: Typical 6 ms • Brightness: ◦ 230 cd/m2 @ 7,200K (default) ◦ 260 cd/m2 @ 10,000K	Cisco Webex Room 70D G2 • 2x 70-inch TFT-LCD monitor, edge-lit LED • Resolution: 3840 x 2160 (16:9) • Contrast ratio: Typical 4000:1 • Viewing angle: ◦ +/- 88 degrees (typical) ◦ +/- 70 degrees (minimum) • Response time: Typical 6 ms • Brightness: ◦ 230 cd/m2 @ 7,200K (default) ◦ 260 cd/m2 @ 10,000K
Optional hardware components	• Additional Table Microphone, Ceiling Microphone	
Bandwidth	• Up to 6 Mbps point to point	
Minimum bandwidth for resolution/frame rate	• 720p30 from 768 kbps • 720p60 from 1152 kbps • 1080p30 from 1472 kbps • 1080p60 from 2560 kbps	
Firewall traversal	• Cisco Expressway™ technology • H.460.18, H.460.19 firewall traversal	
Video standards	• H.264, H.265, H.263 for TANDBERG™ MXP interop only (check admin guide)	
Video inputs	• Two HDMI inputs support formats up to maximum 1080p60 • Three HDMI inputs support formats up to maximum UHD (3840 x 2160) @ 30 fps including HD1080p60 • One 3G-SDI/HD-SDI input supports formats up to maximum 1080p60 • Extended Display Identification Data (EDID) • Consumer Electronics Control (CEC) 2.0	
Video outputs	• Two HDMI outputs support formats up to 3840 x 2160@60 fps (4Kp60) (one or two in use for embedded screens) • One HDMI output supports formats up to 3840 x 2160@30 fps (4Kp30) • Consumer Electronics Control (CEC) 2.0	
Encode and decode	• Video stream: Full HD 1080p60 • Content stream: 4K 2160p15	
Audio standards	• G.711, G.722, G.722.1, G.729AB, 64 kbps and 128 kbps MPEG4 AAC-LD mono and stereo, OPUS	
Audio features	• High-quality 20 kHz audio • Eight separate acoustic echo cancellers • Eight-port audio mixer • Eight assignable equalizers • Automatic Gain Control (AGC) • Automatic noise reduction • Active lip synchronization	

© 2021 Cisco and/or its affiliates. All rights reserved.

Specification	Description
Audio inputs	• Eight microphones, 48V phantom powered, Euroblock connector, each with separate echo cancellers and noise reduction; all microphones can be set for balanced line level • Three HDMI, digital: stereo PC/DVD input
Audio outputs (external)	• Six balanced line level outputs, Euro block connector • Three HDMI outputs (one or two in use for embedded screens) • HDMI input #1 supports Audio Return Channel (ARC). Audio output to Quad Camera
Audio system	• Integrated full-range multichannel and bass speakers • Frequency response: 45 Hz to 20 kHz • Max output level SPL 104dB @ 1m
Speaker tracking	• 6-element microphone array for accurate speaker tracking
Dual stream	• H.239 (H.323) dual stream • Binary Floor Control Protocol (BFCP) (SIP) dual stream • Supports resolutions up to 3840 x 2160p15 (4Kp15) and 1080p60
Wireless sharing	• Cisco Webex client (up to 3840 x 2160p5) • Cisco Intelligent Proximity client (up to 1920 x 1080p5)
Multipoint support	• 5-way embedded SIP/H.323 conferencing capability with MultiSite option
MultiSite features (embedded multipoint) (optional upgrade)	• Adaptive SIP/H.323 MultiSite ◦ 3-way resolution up to 1080p30 + content up to 4Kp15 ◦ 4-way resolution up to 720p30 + content up to 4Kp15 ◦ 5-way resolution up to 720p30 + content up to 4Kp15 • Full individual audio and video transcoding • H.323/SIP/VoIP in the same conference • Support for presentation (H.239/BFCP) from any participant at resolutions up to 3840 x 2160p5 • Best impression (automatic continuous presence layouts) • Encryption and dual stream from any site
Protocols	• H.323 • SIP • Webex
Embedded encryption	• H.323 and SIP point to point • Standards-based: H.235 v3 and Advanced Encryption Standard (AES) • Automatic key generation and exchange
IP network features	• DNS lookup for service configuration • Differentiated services (Quality of Service [QoS]) • IP-adaptive bandwidth management (including flow control) • Automatic gatekeeper discovery • Dynamic playout and lip-sync buffering • H.245 Dual-Tone Multi-frequency (DTMF) tones in H.323 • DTMF tones in SIP, RFC 4733 • Date and time support using Network Time Protocol (NTP) • Packet loss-based downspeeding • Uniform Resource Identifier (URI) dialing

© 2021 Cisco and/or its affiliates. All rights reserved.

Specification	Description
	• TCP/IP • Dynamic Host Configuration Protocol (DHCP) • 802.1X network authentication • 802.1Q Virtual LAN • 802.1p (QoS and class of service [CoS]) • Cisco Media Assure and ClearPath
Call control	• Cisco Collaboration Cloud/Webex • Cisco Unified Communications Manager (UCM) ◦ Native registration with UCM ◦ Requires UCM Version 10.5.2 or later with device pack for Room 70 G2 • Cisco Video Communication Server (VCS) ◦ Native registration with VCS • Third-party H.323 gatekeepers and standards-based SIP proxies
Cisco TelePresence Management Suite (TMS)	• Support for Room 70 G2 beginning with version TMS 15.6.2 (available December 2018)
IPv6 network support	• Single call stack support for both H.323 and SIP • Dual-stack IPv4 and IPv6 for DHCP, SSH, HTTP, HTTPS, DNS, DiffServ • Support for both static and automatic IP configuration, stateless address auto configuration, and DHCPv6
Security features	• Management using HTTPS and SSH • IP administration password • Password to access administration features on the Cisco Webex Room Navigator controller • Disable IP services • Network settings protection
Certificate management	• Certificate Authority Proxy Function (CAPF) support for additional security • Manufacturer-Installed Certificates (MIC) • Locally Significant Certificates (LSC) • X.509 digital certificates (DER encoded binary); both DER and Base-64 formats are acceptable for the client and server certificates; certificates with a key size of 1024, 2048, and 4096 are supported
Network interfaces codec medium	• One Ethernet (RJ-45) 10/100/1000 for LAN • Two Ethernet (RJ-45) 10/100/1000 for direct pairing with camera • Two Ethernet (RJ-45) 10/100/1000 with Power over Ethernet (PoE). One dedicated for direct pairing with Cisco Webex Room Navigator • Wi-Fi 802.11a/b/g/n/ac 2.4 GHz/5 GHz for LAN • 2x2 Multiple Input and Multiple Output (MIMO)
Other interfaces	• 2x USB A port, USB-B, uUSB, factory reset pinhole
Power	• Autosensing power supply • 100-240 VAC, 50/60 Hz • Dual-screen system: Average 470 W* • Dual-screen system: Standby power: 92W • Single-screen system: Average 258 W* • Single-screen system: Standby power: 79W * Power consumption under normal operating conditions as defined in IEC 60950-1

© 2021 Cisco and/or its affiliates. All rights reserved.

Specification	Description
Operating temperature and humidity	• 0° to 35° C (32° to 95° F) ambient temperature • 20% to 90% relative humidity (RH) • Max operating altitude: 3000 meters (9842 ft.)
Storage and transport temperature	• -20° to 60° C (-4° to 140° F) at RH 10% to 90% (noncondensing)
Dimensions	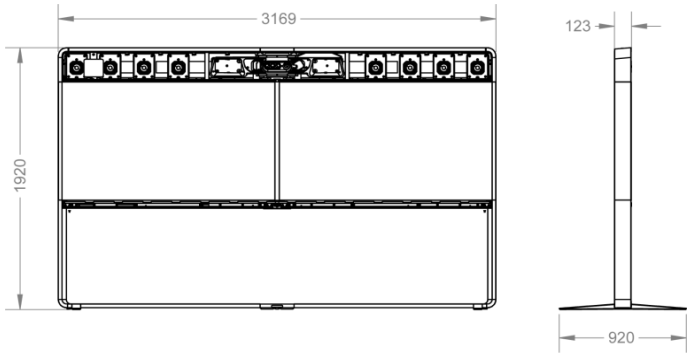 • Webex Room 70D G2 with floor stand: ◦ Width: 124.76 in (3169 mm) ◦ Height: 75.59 in (1920 mm) ◦ Depth: 36.22 in (920 mm) ◦ Weight, monitor module: 390.22 lb (177 kg) ◦ Weight, floor stand: 77.16 lb (35 kg) ◦ Weight: 471.79 lb (214 kg) 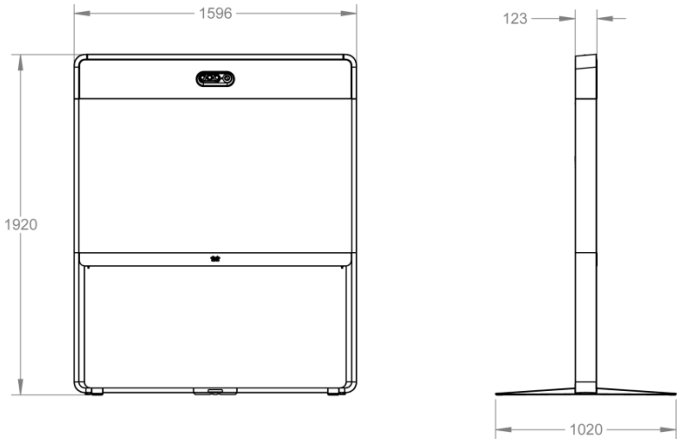 • Webex Room 70S G2 with floor stand: ◦ Width: 62.83 in (1596 mm) ◦ Height: 75.59 in (1920 mm) ◦ Depth: 36.22 in (1020 mm) ◦ Weight, monitor module: 196.21 lb (89 kg) ◦ Weight, floor stand: 57.32 lb (26 kg) ◦ Weight: 249.12 lb (113 kg)

© 2021 Cisco and/or its affiliates. All rights reserved.

Specification	Description
	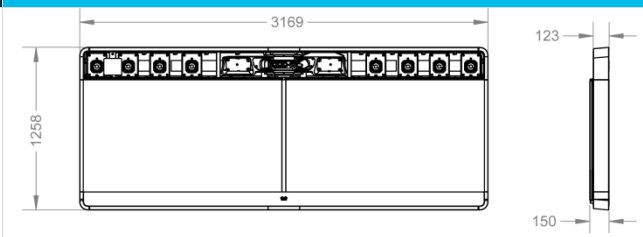 • Webex Room 70D G2 with wall mount: ◦ Width: 124.76 in (3169 mm) ◦ Height: 49.53 in (1258 mm) ◦ Depth: 5.91 in (150 mm) ◦ Weight, monitor modules: 390.22 lb (177 kg) ◦ Weight, wall mount: 88.18 lb (40 kg) ◦ Weight: 485.02 lb (220 kg) 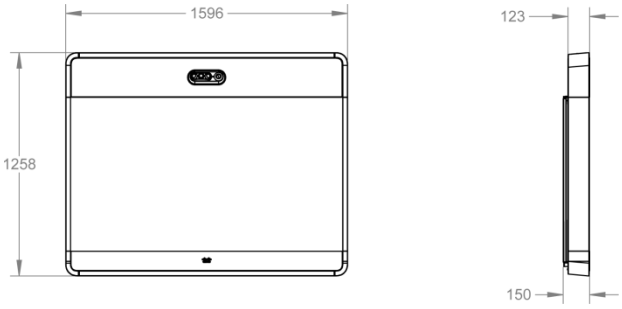 • Webex Room 70S G2 with wall mount: ◦ Width: 62.83 in (1596 mm) ◦ Height: 49.53 in (1258 mm) ◦ Depth: 5.91 in (150 mm) ◦ Weight, monitor module: 196.21 lb (89 kg) ◦ Weight, wall mount: 57.32 lb (26 kg) ◦ Weight: 253.53 lb (115 kg)
Camera overview	• 5K Ultra HD camera • Supports up to 60 fps • 15.1 MP image sensor • 1/1.7 CMOS • 5x digital zoom (3 tele-lenses each with a 50° horizontal field of view) • f/2.0 aperture • 83° horizontal field of view; 51.5° vertical field of view • Auto-framing (audio + face detect) • 5120 x 2880 pixel resolution • Auto focus, brightness, and white balance • Focus distance 1 meter to infinity

© 2021 Cisco and/or its affiliates. All rights reserved.

Regulatory compliance

- Directive 2014/30/EU (EMC Directive) and Directive 2014/35/EU (Low-Voltage Directive) for the non-radio versions
- Directive 2014/53/EU (Radio Equipment Directive) for the radio versions
- Directive 2011/65/EU (RoHS)
- Directive 2002/96/EU (WEEE)
- NRTL approved (product safety)
- FCC listed (radio equipment)

Standards

- Radio: EN 300 328, EN 301 893, EN 300 440 (only for the radio versions)
- EMC: EN 301 489-1 and -17 (only for the radio versions), EN 55032 - Class A, EN 55024
- Safety: EN 60950-1 (for radio and non-radio), EN 62479, EN 62311 (for the radio versions)
- FCC CFR 47 Part 15B (EMC) – Class A
- FCC CFR 47 Part 15C (RF)
- FCC CFR 47 Part 15E (RF)

Check the Product Approval Status Database at https://www.ciscofax.com/ for approval documents per country.

Ordering information

To place an order, contact your local Cisco representative and refer to Table 4.

Table 4. Ordering information

Product name	Part number	Compliance model number
Dual screen		
Cisco Webex Room 70D G2 – Upfront pricing (GPL)	CS-ROOM70DG2-K9	TTC60-27
Cisco Webex Room 70D G2 – NO RADIO	CS-ROOM70DG2-NR-K9	TTC60-27
Cisco Webex Room 70D G2 – NO CRYPTO – NO RADIO	CS-ROOM70DG2-NR-K7	TTC60-27
Single screen		
Cisco Webex Room 70S G2 – Subscription pricing (MSRP for cloud registration)	CS-ROOM70SG2-M-K9	TTC60-26
Cisco Webex Room 70S G2 – Upfront pricing (GPL)	CS-ROOM70SG2-K9	TTC60-26

© 2021 Cisco and/or its affiliates. All rights reserved.

Product name	Part number	Compliance model number
Cisco Webex Room 70S G2 – NO RADIO	CS-ROOM70SG2-NR-K9	TTC60-26
Cisco Webex Room 70S G2 – NO CRYPTO – NO RADIO	CS-ROOM70SG2-NR-K7	TTC60-26
Options		
Cisco Table Microphone	CS-MIC-TABLE-E	TTC5-14
Extension cable for Table Microphone	CAB-MIC-EXT-E	
Cisco Ceiling Microphone	CTS-MIC-CLNG-G2	TTC5-13
Shielded cable for Ceiling Microphone (non-plenum rated)	CAB-ETHRSHLD-10M	
8 m HDMI 2.0 certified cable	CAB-PRES-2HDMI-GR	
Software options – ordered separately		
Remote monitoring	L-ROOM-RM (L-TP-RM)	
MultiSite (embedded multipoint)	L-ROOM70-MS (L-ROOM-PAK)	
Spares		
See separate spare part document	https://www.cisco.com/c/dam/en/us/td/docs/telepresence/endpoint/room-series/spare-parts-and-cables/room-70-spare-parts-list.pdf	

Warranty information

Cisco Webex Room 70 G2 has a 90-day limited liability warranty.

Cisco environmental sustainability

Information about Cisco's environmental sustainability policies and initiatives for our products, solutions, operations, and extended operations or supply chain is provided in the "Environment Sustainability" section of Cisco's Corporate Social Responsibility (CSR) Report.

Reference links to information about key environmental sustainability topics (mentioned in the "Environment Sustainability" section of the CSR Report) are provided in the following table:

Sustainability topic	Reference
Information on product material content laws and regulations	Materials
Information on electronic waste laws and regulations, including products, batteries, and packaging	WEEE compliance

Cisco makes the packaging data available for informational purposes only. It may not reflect the most current legal developments, and Cisco does not represent, warrant, or guarantee that it is complete, accurate, or up to date. This information is subject to change without notice.

© 2021 Cisco and/or its affiliates. All rights reserved.

Cisco services and support

Cisco and our partners provide a broad portfolio of smart, personalized services and support that can help you realize the full business value of your Cisco collaboration investment by increasing business agility and network availability. This portfolio of services accelerates business innovation by harnessing the network as a powerful business platform. For more information about these services, visit: https://www.cisco.com/go/collaborationservices.

Cisco Capital

Flexible payment solutions to help you achieve your objectives

Cisco Capital makes it easier to get the right technology to achieve your objectives, enable business transformation and help you stay competitive. We can help you reduce the total cost of ownership, conserve capital, and accelerate growth. In more than 100 countries, our flexible payment solutions can help you acquire hardware, software, services, and complementary third-party equipment in easy, predictable payments. Learn more.

For more information

- Learn more about Cisco Webex Room 70 G2.
- Download the Cisco Webex app.

Americas Headquarters
Cisco Systems, Inc.
San Jose, CA

Asia Pacific Headquarters
Cisco Systems (USA) Pte. Ltd.
Singapore

Europe Headquarters
Cisco Systems International BV Amsterdam,
The Netherlands

Cisco has more than 200 offices worldwide. Addresses, phone numbers, and fax numbers are listed on the Cisco Website at **https://www.cisco.com/go/offices**.

Cisco and the Cisco logo are trademarks or registered trademarks of Cisco and/or its affiliates in the U.S. and other countries. To view a list of Cisco trademarks, go to this URL: https://www.cisco.com/go/trademarks. Third-party trademarks mentioned are the property of their respective owners. The use of the word partner does not imply a partnership relationship between Cisco and any other company. (1110R)

Printed in USA C78-741269-04 04/21

© 2021 Cisco and/or its affiliates. All rights reserved.