Lenovo

ThinkSystem SR590
Setup Guide



Machine Types: 7X98 and 7X99

Note

Before using this information and the product it supports, be sure to read and understand the safety information and the safety instructions, which are available at:
http://thinksystem.lenovofiles.com/help/topic/safety_documentation/pdf_files.html

In addition, be sure that you are familiar with the terms and conditions of the Lenovo warranty for your server, which can be found at:
http://datacentersupport.lenovo.com/warrantylookup

Eleventh Edition (December 2021)

© Copyright Lenovo 2017, 2021.

LIMITED AND RESTRICTED RIGHTS NOTICE: If data or software is delivered pursuant to a General Services Administration (GSA) contract, use, reproduction, or disclosure is subject to restrictions set forth in Contract No. GS-35F-05925.

Contents

Contents i

Chapter 1. Introduction 1

Server package contents 3
Features. 3
Specifications 5
Particulate contamination 11
Management offerings 12

Chapter 2. Server components 17

Front view 17
Front I/O assembly 20
Rear view 24
Rear view LEDs 26
System board components 29
System board LEDs 31
Internal cable routing. 32
VGA connector 33
Front I/O assembly. 34
Backplane 36
Parts list. 50
Power cords 53

Chapter 3. Server hardware setup . . 55

Server setup checklist 55
Installation Guidelines 56
Safety inspection checklist. 57
System reliability guidelines 58
Working inside the server with the power on . . 58
Handling static-sensitive devices 58
Install server hardware options 59
Remove the security bezel 59
Remove the top cover 60
Remove the air baffle 62
Remove the system fan cage. 63
Install a processor-heat-sink module. 64
Install a memory module 66
Install the 2.5-inch-drive backplane 79
Install the 3.5-inch-drive backplane 81
Install the rear hot-swap drive assembly . . . 83
Install the M.2 backplane and M.2 drive. . . . 85
Install a PCIe adapter 89
Install the LOM adapter 95
Install the serial port module 96
Install the system fan cage. 97
Install a system fan. 98
Install a hot-swap power supply 100
Install the air baffle 104
Install the RAID super capacitor module . . . 105
Install the top cover 107
Install a hot-swap drive 108
Install a simple-swap drive. 111
Install the server in a rack 113
Cable the server 113
Power on the server 113
Validate server setup. 113
Power off the server 113

Chapter 4. System configuration . . .115

Set the network connection for the Lenovo XClarity Controller 115
Update the firmware 116
Configure the firmware 119
Memory configuration 120
Configure DC Persistent Memory Module (DCPMM) 121
RAID configuration 125
Deploy the operating system. 125
Back up the server configuration 126
Update the Vital Product Data (VPD). 126
Update the Universal Unique Identifier (UUID). 127
Update the asset tag 128

Chapter 5. Resolving installation issues 131

Appendix A. Getting help and technical assistance 135

Before you call 135
Collecting service data 136
Contacting Support 137

Appendix B. Trademarks 139

Index 141

© Copyright Lenovo 2017, 2021

Chapter 1. Introduction

The ThinkSystem™ SR590 server is an optimized 2U dual-socket rack server that balances expandability, connectivity, memory, performance, reliability, and manageability. It is an ideal platform for public or private cloud, small-to-medium business and enterprise workloads, which need an optimized mix of compute and storage.

The server comes with a limited warranty. For details about the warranty, see:
https://support.lenovo.com/us/en/solutions/ht503310

For details about your specific warranty, see:
http://datacentersupport.lenovo.com/warrantylookup

Identifying your server

When you contact Lenovo for help, the machine type and serial number information helps support technicians to identify your server and provide faster service.

The machine type and serial number are on the ID label on the right rack latch in the front of the server.

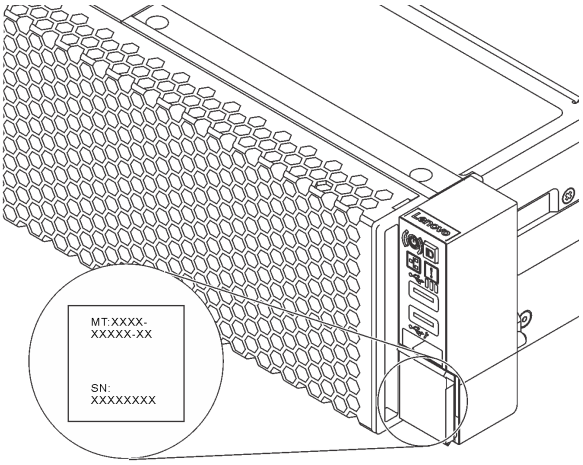

Figure 1. Location of the ID label

XClarity Controller network access label

The XClarity Controller network access label is attached on the top side of the pull-out information tab. After you get the server, peel the XClarity Controller network access label away and store it in a safe place.

© Copyright Lenovo 2017, 2021

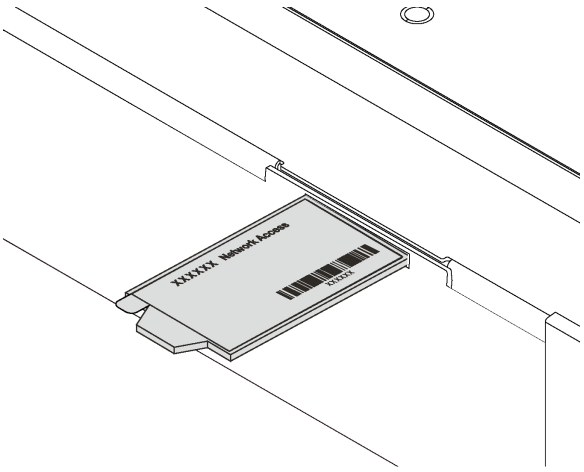

Figure 2. Location of the XClarity Controller network access label

Quick response code

The system service label, which is on the top cover, provides a quick response (QR) code for mobile access to service information. Scan the QR code with a mobile device and a QR code reader application to get quick access to the Lenovo Service web site for this server. The Lenovo Service Information Web site provides additional information for parts installation and replacement videos, and error codes for server support.

The following illustration shows the QR code: https://support.lenovo.com/p/servers/sr590



Figure 3. QR code

Server package contents

When you receive your server, verify that the shipment contains everything that you expected to receive.

The server package includes the following items:

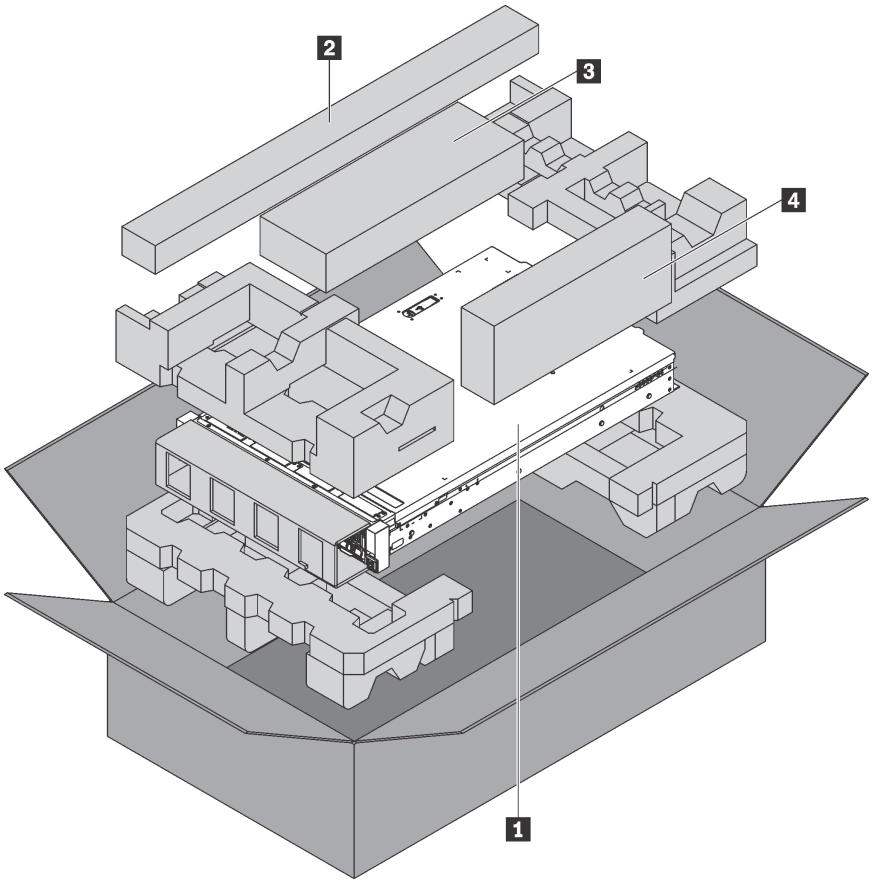

Note: Items marked with asterisk (*) are available on some models only.

1 Server
2 Rail kit*. Detailed instructions for installing the rail kit are provided in the package with the rail kit.
3 Cable management arm*
4 Material box, including items such as accessory kit, power cords* and documentation

Features

Performance, ease of use, reliability, and expansion capabilities were key considerations in the design of the server. These design features make it possible for you to customize the system hardware to meet your needs today and provide flexible expansion capabilities for the future.

Your server implements the following features and technologies:

- **Lenovo XClarity Controller (XCC)**

  The Lenovo XClarity Controller is the common management controller for Lenovo ThinkSystem server hardware. The Lenovo XClarity Controller consolidates multiple management functions in a single chip on the server system board.

Some of the features that are unique to the Lenovo XClarity Controller are enhanced performance, higher-resolution remote video, and expanded security options. For additional information about the Lenovo XClarity Controller, see:

http://sysmgt.lenovofiles.com/help/topic/com.lenovo.systems.management.xcc.doc/product_page.html

- **UEFI-compliant server firmware**

  Lenovo ThinkSystem firmware is Unified Extensible Firmware Interface (UEFI) 2.5 compliant. UEFI replaces BIOS and defines a standard interface between the operating system, platform firmware, and external devices.

  Lenovo ThinkSystem servers are capable of booting UEFI-compliant operating systems, BIOS-based operating systems, and BIOS-based adapters as well as UEFI-compliant adapters.

  Note: The server does not support DOS (Disk Operating System).

- **Large system-memory capacity**

  The server supports registered DIMMs (RDIMMs), load-reduced DIMMs (LRDIMMs), and Intel Optane™ DC Persistent Memory (DCPMMs). For more information about the specific types and maximum amount of memory, see “Specifications” on page 5.

- **Flexible network support**

  The server has a connector for the LOM adapter, which provides two network connectors for network support.

- **Integrated Trusted Platform Module (TPM)**

  This integrated security chip performs cryptographic functions and stores private and public secure keys. It provides the hardware support for the Trusted Computing Group (TCG) specification. You can download the software to support the TCG specification.

  Trusted Platform Module (TPM) has two versions - TPM 1.2 and TPM 2.0. You can change the TPM version from 1.2 to 2.0 and back again.

  For more information on TPM configurations, see “Enable TPM/TCM” in the *Maintenance Manual*.

  Note: For customers in the Chinese Mainland, a Lenovo-qualified TPM 2.0 adapter or a Trusted Cryptographic Module (TCM) adapter (sometimes called a daughter card) may be pre-installed.

- **Large data-storage capacity and hot-swap capability**

  The server models support a maximum of fourteen 3.5-inch hot-swap SAS/SATA storage drives or a maximum of sixteen 2.5-inch hot-swap SAS/SATA storage drives.

  With the hot-swap feature, you can add, remove, or replace drives without turning off the server.

- **Mobile access to Lenovo Service Information website**

  The server provides a QR code on the system service label, which is on the cover of the server, that you can scan using a QR code reader and scanner with a mobile device to get quick access to the Lenovo Service Information website. The Lenovo Service Information website provides additional information for parts installation and replacement videos, and error codes for server support.

- **Redundant networking connection**

  The Lenovo XClarity Controller provides failover capability to a redundant Ethernet connection with the applicable application installed. If a problem occurs with the primary Ethernet connection, all Ethernet traffic that is associated with the primary connection is automatically switched to the optional redundant Ethernet connection. If the applicable device drivers are installed, this switching occurs without data loss and without user intervention.

- **Redundant cooling and optional power capabilities**

The server supports a maximum of two hot-swap power supplies and four hot-swap fans, which provide redundancy for a typical configuration. The redundant cooling by the fans in the server enables continued operation if one of the fans fails.

Specifications

The following information is a summary of the features and specifications of the server. Depending on the model, some features might not be available, or some specifications might not apply.

Table 1. Server specifications

Specification	Description
Dimension	• 2U • Height: 86.5 mm (3.4 inches) • Width: – With rack latches: 482.0 mm (19.0 inches) – Without rack latches: 444.6 mm (17.5 inches) • Depth: 763.7 mm (30.1 inches) **Note:** The depth is measured with rack latches installed, but without the security bezel installed.
Weight	Up to 28.0 kg (61.7b), depending on the server configuration
Processor (depending on the model)	• Up to two Intel® Xeon® Scalable Processors – Scalable up to 26 cores – Designed for Land Grid Array (LGA) 3647 socket – Thermal Design Power (TDP): up to 150 watts For a list of supported processors, see: https://static.lenovo.com/us/en/serverproven/index.shtml **Notes:** • All processors on the system board must be of the same type, and have the same speed, number of cores, and frequency. • For server models with twelve 3.5-inch drive bays, Intel® Xeon® 6240C processor is not supported. • For server models with 550-watt ac power and two processors, the TDP limitations of each processor vary with the drive bay configurations: – Eight 2.5-inch drive bays: no more than 125 watts – Eight 3.5-inch drive bays: no more than 125 watts – Twelve 2.5-inch drive bays: no more than 105 watts – Sixteen 2.5-inch drive bays: no more than 85 watts • When you install a processor, follow below rules to select a heat sink: – If you are going to install a processor with TDP lower than or equal to 125 watts, use the heat sink with part number 01KP655 or 01KP654. – If you are going to install one of the following processors, use the heat sink with part number 01KP652 or 01KP653: – Processor with TDP higher than 125 watts and lower than or equal to 150 watts – Intel® Xeon® 5120T, 5122, 5218T, 5220s, 5220T, 6126T, 6128, 6130T, 6138T, 6209U, 6222V, 6226, 6238T, 6230T, and 8156 processor

Table 1. Server specifications (continued)

Specification	Description
Memory	For 1st Generation Intel® Xeon® Scalable Processors (Intel® Xeon® SP Gen 1): • Minimum: 8 GB • Maximum: – 512 GB using registered DIMMs (RDIMMs) – 1 TB using load-reduced DIMMs (LRDIMMs) • Type (depending on the model): – TruDDR4 2666, single-rank or dual-rank, 8 GB/16 GB/32 GB RDIMMs – TruDDR4 2666, quad-rank, 64 GB LRDIMMs • Slots: 16 DIMM slots For 2nd Generation Intel® Xeon® Scalable Processors (Intel® Xeon® SP Gen 2): • Minimum: 8 GB • Maximum: – 1 TB using registered DIMMs (RDIMMs) – 2 TB using Intel Optane™ DC Persistent Memory (DCPMMs) and RDIMMs in memory mode • Type (depending on the model): – TruDDR4 2666, single-rank or dual-rank, 16 GB/32 GB RDIMMs – TruDDR4 2933, single-rank or dual-rank, 8 GB/16 GB/32 GB/64 GB RDIMMs – 128 GB, 256 GB, or 512 GB DCPMMs • Slots: 16 DIMM slots For a list of supported DIMMs, see: https://static.lenovo.com/us/en/serverproven/index.shtml **Notes:** • Operating speed and total memory capacity depends on the processor model and UEFI settings. • When four DCPMMs are installed, ensure that the processor TDP is lower than or equal to 125 watts.
Operating systems	Supported and certified operating systems: • Microsoft Windows Server • VMware ESXi • Red Hat Enterprise Linux • SUSE Linux Enterprise Server For a complete list of operating systems, see: https://lenovopress.com/osig For OS deployment instructions, see: “Deploy the operating system” on page 125.

Table 1. Server specifications (continued)

Specification	Description
Internal drives	The supported drives vary by models. • Up to eight 3.5-inch simple-swap SATA drives • Up to eight 3.5-inch hot-swap SAS/SATA drives • Up to twelve 3.5-inch hot-swap SAS/SATA/NVMe drives (NVMe drives supported only in drive bays 8–11 if a 3.5-inch AnyBay backplane is installed) • Up to sixteen 2.5-inch hot-swap SAS/SATA/NVMe drives (NVMe drives supported only in drive bays 4–7 if a 2.5-inch AnyBay backplane is installed) • Up to two 3.5-inch hot-swap SAS/SATA drives in the rear (supported only by server models with 12 drive bays in the front) • Up to two M.2 drives **Notes:** • Server models installed with either one processor or two processors support Non-Volatile Memory Express (NVMe) SSDs. For the server model installed with one processor, one AnyBay backplane, and one PCIe switch, no more than four NVMe SSDs can be installed. • Rear hot-swap SAS/SATA drives are supported only when the processor TDP is lower than or equal to 105 watts.
Expansion slots	• One PCIe slot on the system board • Two riser card slots on the system board • Two or three PCIe slots on the riser card For detailed information, see “Rear view” on page 24.
Input/Output (I/O) features	• Front panel: – One VGA connector (available on some models) – One XClarity Controller USB 2.0 connector – One USB 3.0 connector • Rear panel: – One VGA connector – One XClarity Controller network connector – One serial port (available on some models) – Two USB 3.0 connectors – Two Ethernet connectors – Two Ethernet connectors on the LOM adapter (available on some models)

Table 1. Server specifications (continued)

Specification	Description
RAID/HBA adapters (depending on the model)	• SAS/SATA HBA adapters – ThinkSystem 430-8i SAS/SATA 12Gb HBA – ThinkSystem 430-16i SAS/SATA 12Gb HBA – ThinkSystem 430-8e SAS/SATA 12Gb HBA – ThinkSystem 430-16e SAS/SATA 12Gb HBA – ThinkSystem 440-8i SAS/SATA PCIe Gen4 12Gb HBA – ThinkSystem 440-16i SAS/SATA PCIe Gen4 12Gb HBA – ThinkSystem 440-16e SAS/SATA PCIe Gen4 12Gb HBA – ThinkSystem 4350-8i SAS/SATA 12Gb HBA • SAS/SATA RAID adapters – ThinkSystem RAID 530-8i PCIe 12Gb Adapter – ThinkSystem RAID 530-16i PCIe 12Gb Adapter – ThinkSystem RAID 540-8i PCIe 12Gb Adapter – ThinkSystem RAID 730-8i 1GB Adapter – ThinkSystem RAID 730-8i 2GB PCIe Adapter – ThinkSystem RAID 930-8i 2GB Flash PCIe 12Gb Adapter – ThinkSystem RAID 930-16i 4GB Flash PCIe 12Gb Adapter – ThinkSystem RAID 930-16i 8GB Flash PCIe 12Gb Adapter – ThinkSystem RAID 930-8e 4GB Flash PCIe 12Gb Adapter – ThinkSystem RAID 940-8i 4GB Flash PCIe Gen4 12Gb Adapter – ThinkSystem RAID 940-16i 4GB Flash PCIe Gen4 12Gb Adapter – ThinkSystem RAID 940-16i 8GB Flash PCIe Gen4 12Gb Adapter – ThinkSystem RAID 5350-8i PCIe 12Gb Adapter – ThinkSystem RAID 9350-8i 2GB Flash PCIe 12Gb Adapter – ThinkSystem RAID 9350-16i 4GB Flash PCIe 12Gb Adapter **Notes:** • A software RAID controller is integrated on the system board. The software RAID controller supports JBOD mode and RAID levels 0, 1, 5, and 10. • RAID 730-8i 1G Cache SAS/SATA adapter is not available for North America. • RAID 530-8i SAS/SATA adapter cannot be mixed with RAID 730-8i 1G Cache SAS/SATA adapter. • RAID 730-8i 2G Flash SAS/SATA adapter cannot be mixed with RAID 730-8i 1G Cache SAS/SATA adapter or RAID 930-8i SAS/SATA adapter. • The RAID 940 adapters can be mixed with the ThinkSystem 440-8i SAS/SATA PCIe Gen4 12Gb HBA and the ThinkSystem 440-16i SAS/SATA PCIe Gen4 12Gb HBA. • Mixing of RAID/HBA 430/530/730/930 adapters (Gen 3) and RAID/HBA 440/940 adapters (Gen 4) in the same system is not allowed. • RAID 930/940 series or 9350 series adapters require a RAID flash power module. • RAID 4350/5350/9350 series adapters cannot be mixed with HBA/RAID 430/440/530/730/930/940 series SAS/SATA adapters.
System fans	• One processor: three hot-swap fans (including one redundant fan)

Table 1. Server specifications (continued)

Specification	Description
	• Two processors: four hot-swap fans (including one redundant fan) **Notes:** • For server models with twelve 3.5-inch drive bays and has one of following processors installed, if one fan fails, replace it with a new fan to avoid cooling problems: Intel Xeon 5122, 6140, 6140M, 6152, 8156, 8158, 8160, 8160M, 8164, 6242, 6240, 6248, 6252, or 6210U. • If your server comes with only one processor, three system fans (fan 1 to fan 3) are adequate to provide proper cooling. However, you must keep the location for fan 4 occupied by a fan filler to ensure proper airflow.
Power supplies (depending on the model)	One or two hot-swap power supplies for redundancy support • 550-watt ac 80 PLUS Platinum • 750-watt ac 80 PLUS Platinum • 750-watt ac 80 PLUS Titanium
Electrical input	• Sine-wave input (50 Hz to 60 Hz) required • Input voltage low range: – Minimum: 100 V ac – Maximum: 127 V ac • Input voltage high range: – Minimum: 200 V ac – Maximum: 240 V ac **Note:** For server models with 750-watt ac 80 PLUS Titanium power supplies, 100–127 V ac input voltage is not supported. **CAUTION:** **1. 240 V dc input (input range: 180-300 V dc) is supported in Chinese Mainland ONLY.** **2. Power supply with 240 V dc input cannot support hot plugging power cord function. Before removing the power supply with dc input, please turn off server or disconnect dc power sources at the breaker panel or by turning off the power source. Then, remove the power cord.** **3. In order to for the ThinkSystem products to operate error free in both a DC or AC electrical environment, a TN-S earthing system which complies to 60364-1 IEC 2005 standard as to be present or installed.**
Minimal configuration for debugging	• One processor in processor socket 1 • One memory DIMM at slot 3 • One power supply • Three system fans (fan 1 to fan 3)

Table 1. Server specifications (continued)

Specification	Description
Acoustical noise emissions	• Sound power level, idle – 4.6 bels, minimum – 4.8 bels, typical – 5.9 bels, maximum • Sound power level, operating – 4.7 bels, minimum – 4.8 bels, typical – 5.9 bels, maximum **Notes:** • These sound power levels are measured in controlled acoustical environments according to procedures specified by ISO 7779 and are reported in accordance with ISO 9296. • The declared acoustic noise levels are based on specified configurations and they may change depending on configurations/conditions. • The declared acoustic noise levels may increase greatly, if high-power components are installed, for example, some high-power NICs, CPUs, and GPUs.
Environment	The server is supported in the following environment: **Note:** This server is designed for standard data center environment and recommended to be placed in industrial data center. • Air temperature: – Operating: – ASHRAE class A2: 10–35°C (50–95°F); when the altitude exceeds 900 m (2953 ft), the maximum ambient temperature value decreases by 1°C (1.8°F) with every 300 m (984 ft) of altitude increase. – ASHRAE class A3 (for some models): 5–40°C (41–104°F); when the altitude exceeds 900 m (2953 ft), the maximum ambient temperature value decreases by 1°C (1.8°F) with every 175 m (574 ft) of altitude increase. – ASHRAE class A4 (for some models): 5–45°C (41–113°F); when the altitude exceeds 900 m (2953 ft), the maximum ambient temperature value decreases by 1°C (1.8°F) with every 125 m (410 ft) of altitude increase. – Server off: 5–45°C (41–113°F) – Shipping or storage: -40–60°C (-40–140°F) • Maximum altitude: 3050 m (10 000 ft) • Relative humidity (non-condensing): – Operating: – ASHRAE class A2: 8%–80%; maximum dew point: 21°C (70°F) – ASHRAE class A3: 8%–85%; maximum dew point: 24°C (75°F) – ASHRAE class A4: 8%–90%; maximum dew point: 24°C (75°F) – Shipping or storage: 8%–90% • Particulate contamination **Attention:** Airborne particulates and reactive gases acting alone or in combination with other environmental factors such as humidity or temperature might pose a risk to the server.

Table 1. Server specifications (continued)

Specification	Description
	Notes: • Your server complies with ASHRAE class A2 specifications. The server performance might be impacted if one system fan fails. For server models with twelve 3.5-inch drive bays, if one system fan fails, the following Intel Xeon processors are not supported: 5122, 6140, 6140M, 6152, 8156, 8158, 8160, 8160M, 8164, 6242, 6240, 6248, 6252, or 6210U. • Depending on the hardware configuration, some models comply with ASHRAE class A3 and class A4 specifications. To comply with ASHRAE class A3 and class A4 specifications, the server model must meet the following requirements at the same time: – Two power supplies are installed. – No system fan fails. – Rear hot-swap drive is not installed. – NVMe drive is not installed. – DCPMM memory is not installed. – For server models with twelve 3.5-inch drives, M.2 drive is not installed when the operating temperature is outside ASHRAE class A3 specifications. – The following processors are not installed: Intel Xeon 6136, 6140, 6140M, 6142, 6142M, 6148, 6152, 8158, 8160, 8160M, 8160T, 8164, 6242, 6240, 6248, 6252, or 6210U. For a list of supported processors, see: https://static.lenovo.com/us/en/serverproven/index.shtml

Important information about EU ecodesign requirements

To meet the EU ecodesign requirements for energy-related products (ErP) Lot 9, your server must meet the following requirements:

- Minimum memory: 16 GB
- If your server is configured with one processor, these processors are not supported: Intel Xeon 3104, 3106, 3204, 4108, 4112, 5122, 5222, 8156, and 8256.

Particulate contamination

Attention: Airborne particulates (including metal flakes or particles) and reactive gases acting alone or in combination with other environmental factors such as humidity or temperature might pose a risk to the device that is described in this document.

Risks that are posed by the presence of excessive particulate levels or concentrations of harmful gases include damage that might cause the device to malfunction or cease functioning altogether. This specification sets forth limits for particulates and gases that are intended to avoid such damage. The limits must not be viewed or used as definitive limits, because numerous other factors, such as temperature or moisture content of the air, can influence the impact of particulates or environmental corrosives and gaseous contaminant transfer. In the absence of specific limits that are set forth in this document, you must implement practices that maintain particulate and gas levels that are consistent with the protection of human health and safety. If Lenovo determines that the levels of particulates or gases in your environment have caused damage to the device, Lenovo may condition provision of repair or replacement of devices or parts on implementation of appropriate remedial measures to mitigate such environmental contamination. Implementation of such remedial measures is a customer responsibility.

Table 2. Limits for particulates and gases

Contaminant	Limits
Gaseous	Severity level G1 as per ANSI/ISA 71.04-1985[1], which states that the reactivity rate of copper coupons shall be less than 300 Angstroms per month (Å/month, ≈ 0.0039 μg/cm^2-hour weight gain).[2] In addition, the reactivity rate of silver coupons shall be less than 200Å/month (≈ 0.0035 μg/cm^2-hour weight gain).[3] The reactive monitoring of gaseous corrosivity must be conducted approximately 5 cm (2 in.) in front of the rack on the air inlet side at one-quarter and three-quarter frame height off the floor or where the air velocity is much higher.
Particulate	Data centers must meet the cleanliness level of ISO 14644-1 class 8. For data centers without airside economizer, the ISO 14644-1 class 8 cleanliness might be met by choosing one of the following filtration methods: • The room air might be continuously filtered with MERV 8 filters. • Air entering a data center might be filtered with MERV 11 or preferably MERV 13 filters. For data centers with airside economizers, the choice of filters to achieve ISO class 8 cleanliness depends on the specific conditions present at that data center. The deliquescent relative humidity of the particulate contamination should be more than 60% RH.[4] Data centers must be free of zinc whiskers.[5]

[1] ANSI/ISA-71.04-1985. *Environmental conditions for process measurement and control systems: Airborne contaminants*. Instrument Society of America, Research Triangle Park, North Carolina, U.S.A.

[2] The derivation of the equivalence between the rate of copper corrosion growth in the thickness of the corrosion product in Å/month and the rate of weight gain assumes that Cu_2S and Cu_2O grow in equal proportions.

[3] The derivation of the equivalence between the rate of silver corrosion growth in the thickness of the corrosion product in Å/month and the rate of weight gain assumes that Ag_2S is the only corrosion product.

[4] The deliquescent relative humidity of particulate contamination is the relative humidity at which the dust absorbs enough water to become wet and promote ionic conduction.

[5] Surface debris is randomly collected from 10 areas of the data center on a 1.5 cm diameter disk of sticky electrically conductive tape on a metal stub. If examination of the sticky tape in a scanning electron microscope reveals no zinc whiskers, the data center is considered free of zinc whiskers.

Management offerings

The XClarity portfolio and other system management offerings described in this section are available to help you manage the servers more conveniently and efficiently.

Overview

Offerings	Description
Lenovo XClarity Controller	Baseboard management controller. Consolidates the service processor functionality, Super I/O, video controller, and remote presence capabilities into a single chip on the server system board. **Interface** • CLI application • GUI application • Mobile application • Web interface • REST API **Usage and downloads** http://sysmgt.lenovofiles.com/help/topic/com.lenovo.systems.management.xcc.doc/product_page.html
Lenovo XClarity Administrator	Centralized interface for multi-server management. **Interface** • GUI application • Mobile application • Web interface • REST API **Usage and downloads** http://sysmgt.lenovofiles.com/help/topic/com.lenovo.lxca.doc/aug_product_page.html
Lenovo XClarity Essentials toolset	Portable and light toolset for server configuration, data collection, and firmware updates. Suitable both for single-server or multi-server management contexts. **Interface** • **OneCLI**: CLI application • **Bootable Media Creator**: CLI application, GUI application • **UpdateXpress**: GUI application **Usage and downloads** http://sysmgt.lenovofiles.com/help/topic/xclarity_essentials/overview.html
Lenovo XClarity Provisioning Manager	UEFI-based GUI tool on a single server that can simplify management tasks. **Interface** • Web interface (BMC remote access) • GUI application **Usage and downloads** https://sysmgt.lenovofiles.com/help/topic/lxpm_frontend/lxpm_about.html

Offerings	Description
Lenovo XClarity Integrator	Series of applications that integrate the management and monitoring functionalities of the Lenovo physical servers with the software used in a certain deployment infrastructure, such as VMware vCenter, Microsoft Admin Center, or Microsoft System Center while delivering additional workload resiliency. **Interface** GUI application **Usage and downloads** https://sysmgt.lenovofiles.com/help/topic/lxci/lxci_product_page.html
Lenovo XClarity Energy Manager	Application that can manage and monitor server power and temperature. **Interface** • GUI application • Web Interface **Usage and downloads** https://datacentersupport.lenovo.com/solutions/lnvo-lxem
Lenovo Capacity Planner	Application that supports power consumption planning for a server or rack. **Interface** • GUI application • Web Interface **Usage and downloads** https://datacentersupport.lenovo.com/solutions/lnvo-lcp

Functions

Offerings		Functions							
		Multi-system mgmt	**OS deploy-ment**	**System configu-ration**	**Firm-ware up-dates**	**Event-s/alert moni-toring**	**Inven-tory/ logs**	**Pow-er mgmt**	**Power planning**
Lenovo XClarity Controller				√	√	√	√		
Lenovo XClarity Administrator		√	√	√	√	√	√		
Lenovo XClarity Essen-tials toolset	OneCLI	√		√	√	√	√		
	Bootable Media Creator			√	√		√		
	UpdateXpress			√	√				
Lenovo XClarity Provisioning Manager			√	√	√		√		
Lenovo XClarity Integrator		√	√[6]	√	√	√	√	√	

Offerings	Functions							
	Multi-system mgmt	**OS deploy-ment**	**System configu-ration**	**Firm-ware up-dates**	**Event-s/alert moni-toring**	**Inven-tory/ logs**	**Pow-er mgmt**	**Power planning**
Lenovo XClarity Energy Manager	√				√		√	
Lenovo Capacity Planner								√

Notes:

1. Most options can be updated through the Lenovo tools. Some options, such as GPU firmware or Omni-Path firmware, require the use of vendor tools.
2. Firmware updates are limited to Lenovo XClarity Provisioning Manager, BMC firmware, and UEFI updates only. Firmware updates for optional devices, such as adapters, are not supported.
3. The server UEFI settings for option ROM must be set to **UEFI** to update firmware using Lenovo XClarity Essentials Bootable Media Creator.
4. The server UEFI settings for option ROM must be set to **UEFI** for detailed adapter card information, such as model name and firmware levels, to be displayed in Lenovo XClarity Administrator, Lenovo XClarity Controller, or Lenovo XClarity Essentials OneCLI.
5. It's highly recommended that you check the power summary data for your server using Lenovo Capacity Planner before purchasing any new parts.
6. Lenovo XClarity Integrator supports Windows operating system deployment with the Microsoft System Center Configuration Manager (SCCM) deployment pack.

Chapter 2. Server components

This section provides information to help you locate your server components.

Front view

The front view of the server varies by model.

The following illustrations show the front views of server models with hot-swap drives. For server models with eight 3.5-inch drive bays, you can also install simple-swap drives if a simple-swap-drive backplate assembly is installed. Depending on the model, your server might look slightly different the illustrations.

- "Front view of server models with 2.5-inch drive bays" on page 17
- "Front view of server models with 3.5-inch drive bays" on page 19

Front view of server models with 2.5-inch drive bays

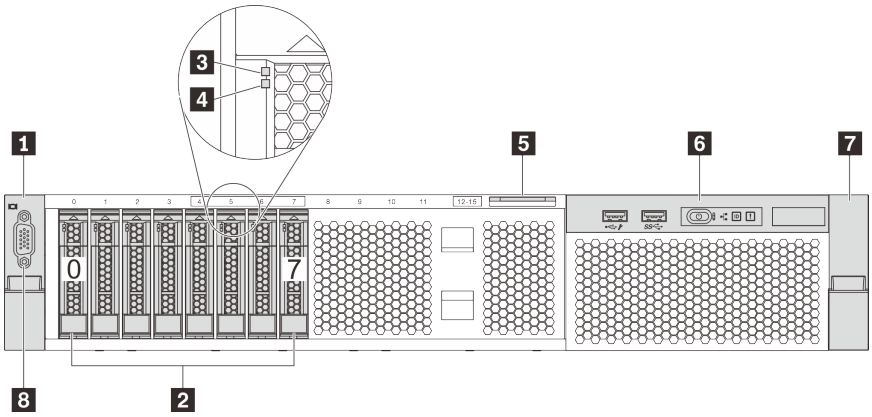

Figure 4. Front view of server models with eight 2.5-inch drive bays (0–7)

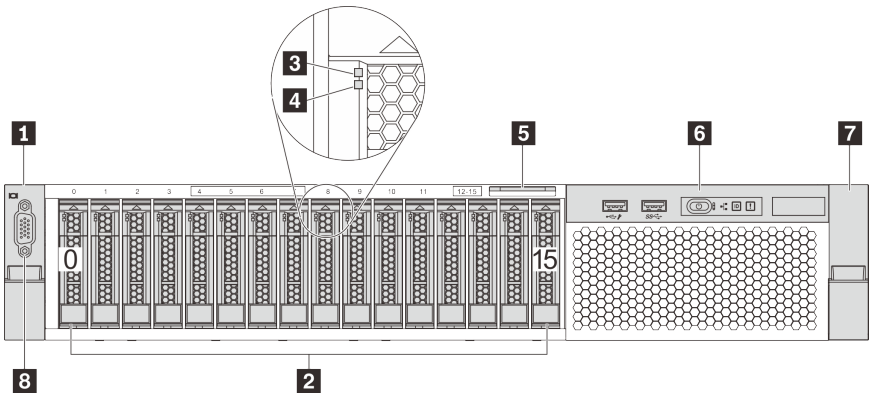

Figure 5. Front view of server models with sixteen 2.5-inch drive bays (0–15)

Table 3. Components on the front of server models with 2.5-inch drive bays

1 Rack latch (left)	2 2.5-inch drive bays
3 Drive activity LED	4 Drive status LED

© Copyright Lenovo 2017, 2021

Table 3. Components on the front of server models with 2.5-inch drive bays (continued)

5 Pull-out information tab	6 Front I/O assembly
7 Rack latch (right)	8 VGA connector (optional)

1 7 Rack latches

If your server is installed in a rack, you can use the rack latches to help you slide the server out of the rack. You also can use the rack latches and screws to secure the server in the rack so that the server cannot slide out, especially in vibration-prone areas. For more information, refer to the *Rack Installation Guide* that comes with your rail kit.

2 2.5-inch drive bays

The number of the installed drives in your server varies by model. When you install drives, follow the order of the drive bay numbers.

The EMI integrity and cooling of the server are protected by having all drive bays occupied. The vacant drive bays must be occupied by drive fillers.

3 Drive activity LED

4 Drive status LED

Each hot-swap drive has two LEDs.

Drive LED	Status	Description
Drive status LED	Solid yellow	The drive has an error.
	Blinking yellow (blinking slowly, about one flash per second)	The drive is being rebuilt.
	Blinking yellow (blinking rapidly, about four flashes per second)	The RAID adapter is locating the drive.
Drive activity LED	Solid green	The drive is powered but not active.
	Blinking green	The drive is active.

5 Pull-out information tab

The Lenovo XClarity Controller network access label of the server is attached on the pull-out information tab.

6 Front I/O assembly

For information about the controls, connectors, and status LEDs on the front I/O assembly, see "Front I/O assembly" on page 20.

8 VGA connector (optional)

Used to attach a high-performance monitor, a direct-drive monitor, or other devices that use a VGA connector.

Front view of server models with 3.5-inch drive bays

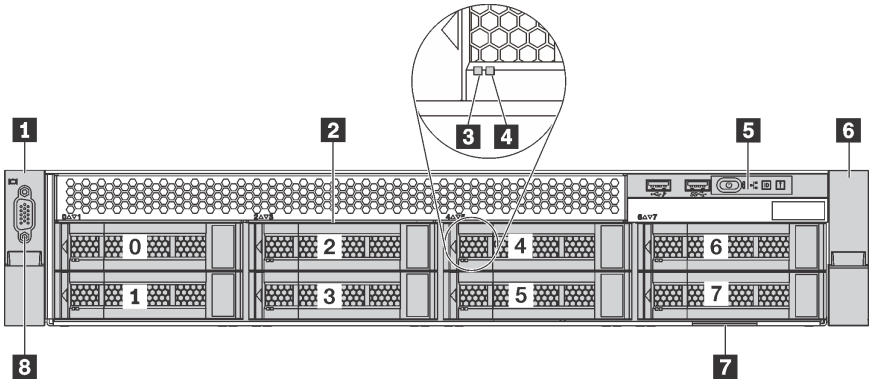

Figure 6. Front view of server models with eight 3.5-inch drive bays (0–7)

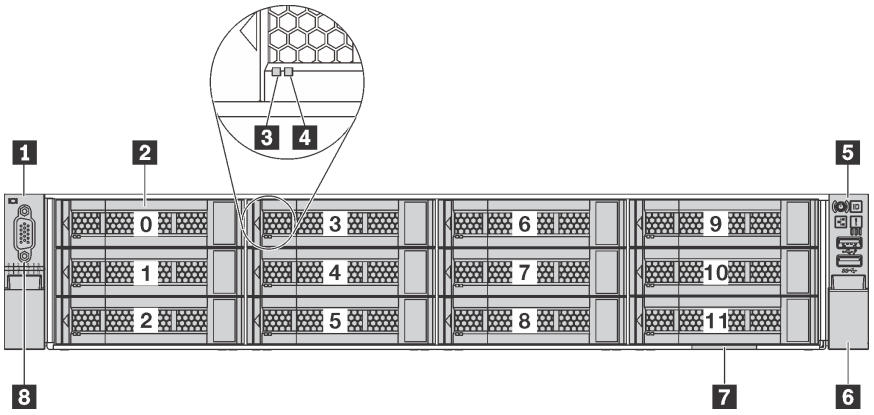

Figure 7. Front view of server models with twelve 3.5-inch drive bays (0–11)

Table 4. Components on the front of server models with 3.5-inch drive bays

1 Rack latch (left)	2 3.5-inch drive bays
3 Drive activity LED	4 Drive status LED
5 Front I/O assembly	6 Rack latch (right)
7 Pull-out information tab	8 VGA connector (optional)

1 6 Rack latches

If your server is installed in a rack, you can use the rack latches to help you slide the server out of the rack. You also can use the rack latches and screws to secure the server in the rack so that the server cannot slide out, especially in vibration-prone areas. For more information, refer to the *Rack Installation Guide* that comes with your rail kit.

2 3.5-inch drive bays

The number of the installed drives in your server varies by model. When you install drives, follow the order of the drive bay numbers.

The EMI integrity and cooling of the server are protected by having all drive bays occupied. The vacant drive bays must be occupied by drive fillers.

3 Drive activity LED

4 Drive status LED

Each hot-swap drive has two LEDs.

Drive LED	Status	Description
Drive status LED	Solid yellow	The drive has an error.
	Blinking yellow (blinking slowly, about one flash per second)	The drive is being rebuilt.
	Blinking yellow (blinking rapidly, about four flashes per second)	The RAID adapter is locating the drive.
Drive activity LED	Solid green	The drive is powered but not active.
	Blinking green	The drive is active.

5 Front I/O assembly

For information about the controls, connectors, and status LEDs on the front I/O assembly, see "Front I/O assembly" on page 20.

7 Pull-out information tab

The Lenovo XClarity Controller network access label of the server is attached on the pull-out information tab.

8 VGA connector (optional)

Used to attach a high-performance monitor, a direct-drive monitor, or other devices that use a VGA connector.

Front I/O assembly

The front I/O assembly of the server provides controls, connectors, and LEDs. The front I/O assembly varies by model.

The following illustrations show the controls, connectors, and LEDs on the front I/O assembly of the server. To locate the front I/O assembly, see "Front view" on page 17.

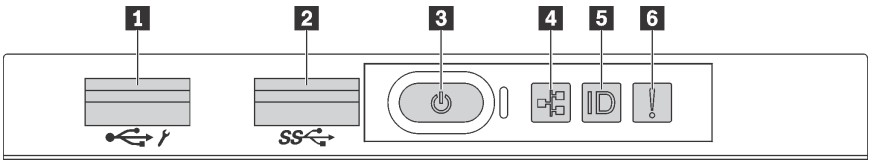

Figure 8. Front I/O assembly for server models with eight 3.5-inch-drive bays, eight 2.5-inch-drive bays, and sixteen 2.5-inch-drive bays

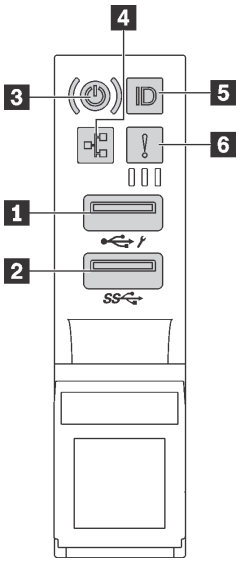

Figure 9. Front I/O assembly for server models with twelve 3.5-inch-drive bays

Table 5. Components on the front I/O assembly

1 XClarity Controller USB connector	2 USB 3.0 connector
3 Power button with power status LED	4 Network activity LED
5 System ID button with system ID LED	6 System error LED

1 XClarity Controller USB connector

Depending on the setting, this connector supports USB 2.0 function, XClarity Controller management function, or both.

- If the connector is set for USB 2.0 function, you can attach a device that requires a USB 2.0 connection, such as a keyboard, a mouse, or a USB storage device.
- If the connector is set for XClarity Controller management function, you can attach a mobile device installed with the application to run XClarity Controller event logs.
- If the connector is set to have both functions, you can press the system ID button for three seconds to switch between the two functions.

For more information, see “Set the network connection for the Lenovo XClarity Controller” on page 115.

2 USB 3.0 connector

Used to attach a device that requires a USB 2.0 or 3.0 connection, such as a keyboard, a mouse, or a USB storage device.

3 Power button with power status LED

You can press the power button to turn on the server when you finish setting up the server. You also can hold the power button for several seconds to turn off the server if you cannot turn off the server from the operating system. The power status LED helps you to determine the current power status.

Status	Color	Description
Solid on	Green	The server is on and running.
Slow blinking (about one flash per second)	Green	The server is off and is ready to be powered on (standby state).
Fast blinking (about four flashes per second)	Green	The server is off, but the XClarity Controller is initializing, and the server is not ready to be powered on.
Off	None	There is no ac power applied to the server.

Compatibility of the NIC LED and the network activity LED

NIC adapter	Network activity LED
LOM adapter	Support
ML2 NIC adapter	Support
PCIE NIC adapter	Not support

4 Network activity LED

The network activity LED on the front I/O assembly helps you identify the network connectivity and activity.

Status	Color	Description
On	Green	The server is connected to a network.
Blinking	Green	The network is connected and active.
Off	None	The server is disconnected from the network.

5 System ID button with system ID LED

Use this system ID button and the blue system ID LED to visually locate the server. A system ID LED is also located on the rear of the server. Each time you press the system ID button, the state of both the system ID LEDs changes. The LEDs can be changed to on, blinking, or off. You can also use the Lenovo XClarity Controller or a remote management program to change the state of the system ID LEDs to assist in visually locating the server among other servers.

If the XClarity Controller USB connector is set to have both the USB 2.0 function and XClarity Controller management function, you can press the system ID button for three seconds to switch between the two functions.

6 System error LED

The system error LED provides basic diagnostic functions for your server. If the system error LED is lit, one or more LEDs elsewhere in the server might also be lit to direct you to the source of the error.

Status	Color	Description	Action
On	Yellow	An error has been detected on the server. Causes might include but not limited to the following errors: • The temperature of the server reached the non-critical temperature threshold. • The voltage of the server reached the non-critical voltage threshold. • A fan has been detected to be running at low speed. • A hot-swap fan has been removed. • The power supply has a critical error. • The power supply is not connected to the power.	Check the event log to determine the exact cause of the error. For information about troubleshooting, see Chapter 5 “Resolving installation issues” on page 131.
Off	None	The server is off or the server is on and is working correctly.	None.

Rear view

The rear of the server provides access to several components, including the power supplies, PCIe adapters, and Ethernet connectors.

The following illustrations show the rear view of the server.

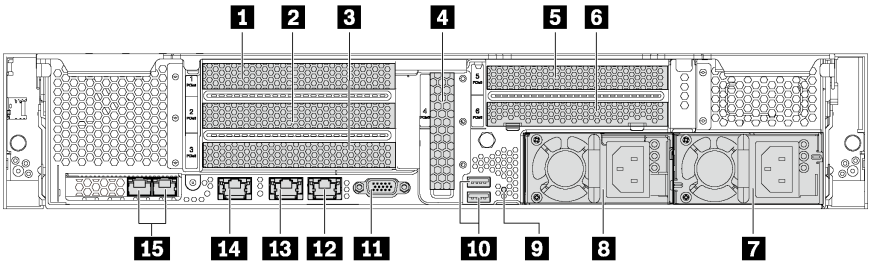

Figure 10. Rear view of server models with six PCIe slots

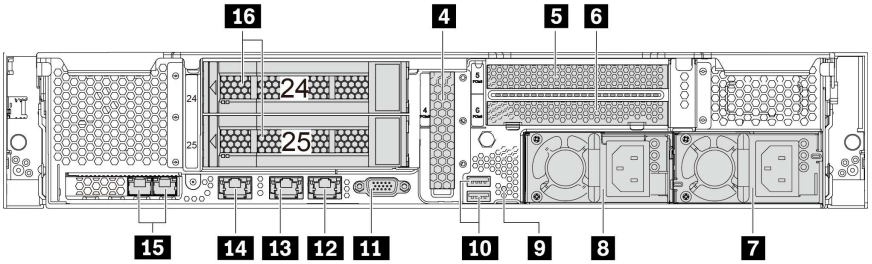

Figure 11. Rear view of server models with two rear drive bays (24–25) and three PCIe slots

Table 6. Components on the rear of the server

1 PCIe slot 1	2 PCIe slot 2
3 PCIe slot 3	4 PCIe slot 4
5 PCIe slot 5	6 PCIe slot 6
7 Power supply 2 (available on some models)	8 Power supply 1
9 NMI button	10 USB 3.0 connectors
11 VGA connector	12 1Gb Ethernet connector 2 (RJ-45)
13 1Gb Ethernet connector 1 (RJ-45)	14 XClarity Controller network connector
15 Ethernet connectors on the LOM adapter	16 Rear 3.5-inch drive bays

1 2 3 4 5 6 PCIe slots

You can find the PCIe slot numbers on the rear view of the chassis.

Notes:

- Your server supports PCIe slot 5 when two processors are installed.
- PCIe slot 6 does not support PCIe adapters with external mini-SAS HD connectors.

- Only use PCIe adapters provided by Lenovo. Lenovo makes no warranty regarding non-Lenovo products or services. For a list of supported PCIe adapters, see: https://static.lenovo.com/us/en/serverproven/index.shtml.
- When installing Ethernet adapters with RJ-45 connectors, follow below installation sequence:

Table 7. Installation sequence of Ethernet adapters with RJ-45 connectors

Number of installed processor	PCIe slot
One processor	4, 2, 6, 3, 1
Two processors	4, 2, 6, 3, 5, 1

PCIe adapter slots 1, 2, and 3 on riser 1 assembly:
Your server supports three types of riser cards for riser 1 assembly.

- Type 1
  - Slot 1: PCIe x16 (x8, x4, x1), full-height, half-length
  - Slot 2: PCIe x16 (x8, x4, x1), full-height, half-length
  - Slot 3: PCIe x16 (x8, x4, x1), full-height, half-length
- Type 2
  - Slot 1: PCIe x16 (x8, x4, x1), full-height, half-length
  - Slot 2: PCIe x16 (x8, x4, x1), full-height, half-length
  - Slot 3: ML2 x8 (x8, x4, x1), full-height, half-length
- Type 3
  - Slot 1: PCIe x16 (x16, x8, x4, x1), full-height, half-length
  - Slot 2: Not available
  - Slot 3: PCIe x16 (x8, x4, x1), full-height, half-length

PCIe adapter slot 4 on system board: PCIe x8 (x8, x4, x1), low-profile

PCIe adapter slots 5 and 6 on riser 2 assembly:

- Slot 5: PCIe x16 (x16, x8, x4, x1), full-height, half-length,
- Slot 6: PCIe x16 (x8, x4, x1), full-height, half-length

7 Power supply 2 (available on some models)

8 Power supply 1

The hot-swap redundant power supplies help you avoid significant interruption to the operation of the system when a power supply fails. You can purchase a power supply option from Lenovo and install the power supply to provide power redundancy without turning off the server. On each power supply, there are three status LEDs near the power cord connector. For information about the status LEDs, see “Rear view LEDs” on page 26.

9 NMI button

Press this button to force a nonmaskable interrupt (NMI) to the processor. By this way, you can blue screen the server and take a memory dump. You might have to use a pen or the end of a straightened paper clip to press the button.

10 USB 3.0 connectors

Used to attach a device that requires a USB 2.0 or 3.0 connection, such as a keyboard, USB mouse, or USB storage device.

11 VGA connector

Used to attach a high-performance monitor, a direct-drive monitor, or other devices that use a VGA connector.

12 Ethernet connector 2

13 Ethernet connector 1

Used to attach an Ethernet cable for a LAN. The Ethernet connector has two status LEDs to help you identify the Ethernet connectivity and activity. See "Rear view LEDs" on page 26.

Ethernet connector 1 can be set as XClarity Controller network connector. To set Ethernet connector 1 as XClarity Controller network connector, start Setup utility, go to **BMC Settings → Network Settings → Network Interface Port** and select **Shared**. Then, go to **Shared NIC on** and select **Onboard Port 1**.

14 XClarity Controller network connector

Used to attach an Ethernet cable to manage the system using XClarity Controller.

15 Ethernet connectors on the LOM adapter

The LOM adapter provides two extra Ethernet connectors for network connections.

The left Ethernet connector on the LOM adapter can be set as XClarity Controller network connector. To set the Ethernet connector as XClarity Controller network connector, start Setup utility, go to **BMC Settings → Network Settings → Network Interface Port** and select **Shared**. Then, go to **Shared NIC on** and select **PHY Card**.

16 Rear 3.5-inch drive bays

Used to install up to two hot-swap drives on the rear of the server. The rear drive bays are available only on the twelve 3.5-inch-drive server model.

The number of the installed drives in your server varies by model. The EMI integrity and cooling of the server are protected by having all drive bays occupied. The vacant drive bays must be occupied by drive bay fillers or drive fillers.

Rear view LEDs

There are several LEDs on the rear of the server.

The following illustration shows the LEDs on the rear view of server models without the rear hot-swap drive assembly. The LEDs on the rear view of server models with the rear hot-swap drive assembly are the same.

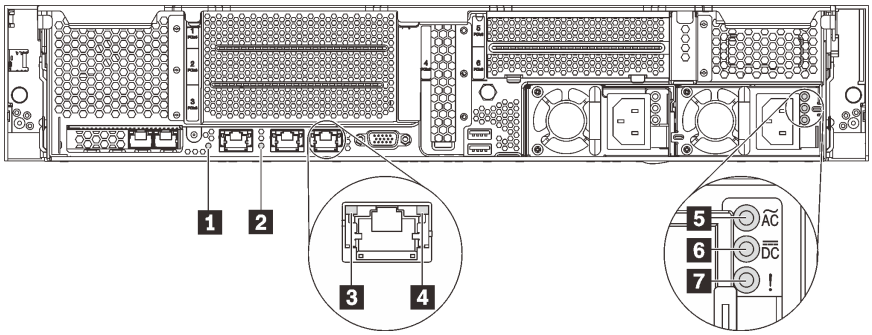

Figure 12. LEDs on the rear of the server

Table 8. LEDs on the rear of the server

1 System ID LED	2 System error LED
3 Ethernet link LED	4 Ethernet activity LED
5 Power input LED	6 Power output LED
7 Power supply error LED	

1 System ID LED

The blue system ID LED helps you to visually locate the server. A system ID LED is also located on the front of the server. Each time you press the system ID button, the state of both the system ID LEDs changes. The LEDs can be changed to on, blinking, or off. You can also use the Lenovo XClarity Controller or a remote management program to change the state of the system ID LEDs to assist in visually locating the server among other servers.

2 System error LED

For the detailed information, see “Front I/O assembly” on page 20.

3 Ethernet link LED

4 Ethernet activity LED

Each Ethernet connector has two status LEDs.

Ethernet status LED	Color	Status	Description
3 Ethernet link LED	Green	On	Network link is established.
	None	Off	Network link is disconnected.
4 Ethernet activity LED	Green	Blinking	Network link is connected and active.
	None	Off	The server is disconnected from a LAN.

5 Power input LED

6 Power output LED

7 Power supply error LED

Each hot-swap power supply has three status LEDs.

LED	Description
5 Power input LED	• Green: The power supply is connected to the ac power source. • Off: The power supply is disconnected from the ac power source or a power problem occurs.
6 Power output LED	• Green: The server is on and the power supply is working normally. • Blinking green: The power supply is in the zero-output mode (standby). When the server power load is low, one of the installed power supplies enters into the standby state while the other one delivers the entire load. When the power load increases, the standby power supply will switch to active state to provide sufficient power to the system. To disable zero-output mode, start the Setup utility, go to **System Settings → Power → Zero Output** and select **Disable**. If you disable the zero-out mode, both power supplies will be in the active state. • Off: The server is powered off, or the power supply is not working properly. If the server is powered on but the output status LED is off, replace the power supply.
7 Power supply error LED	• Yellow: The power supply has failed. To resolve the issue, replace the power supply. • Off: The power supply is working normally

System board components

The illustration in this section shows the component locations on the system board.

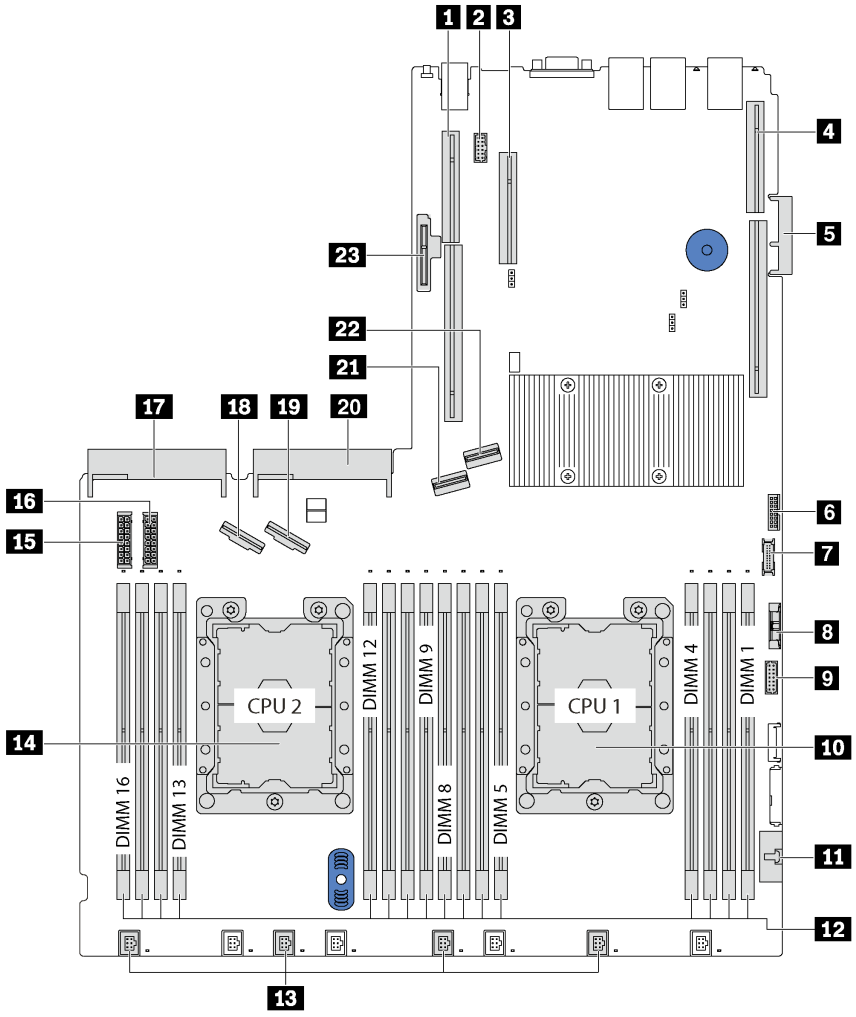

Figure 13. System board components

Table 9. Components on the system board

1 Riser 2 slot	2 Serial-port-module connector
3 PCIe slot 4	4 Riser 1 slot
5 LOM adapter connector	6 TCM[1]/TPM[2] connector (for Chinese Mainland only)
7 Front USB connector	8 CMOS battery
9 Front VGA connector	10 Processor 1 socket
11 Operator-information-panel connector	12 DIMM slots (16)
13 System fan connectors (4)	14 Processor 2 socket
15 Backplane power connector 1	16 Backplane power connector 2

Table 9. Components on the system board (continued)

17 Power supply 2 connector	18 NVMe 2–3 connector
19 NVMe 0–1 connector	20 Power supply 1 connector
21 SATA 4-7 connector	22 SATA 0-3 connector
23 M.2 module slot (SATA/PCIe slot 7)	

Notes:

- [1] Trusted Cryptography Module
- [2] Trusted Platform Module

System board LEDs

The illustration in this section shows the LEDs on the system board.

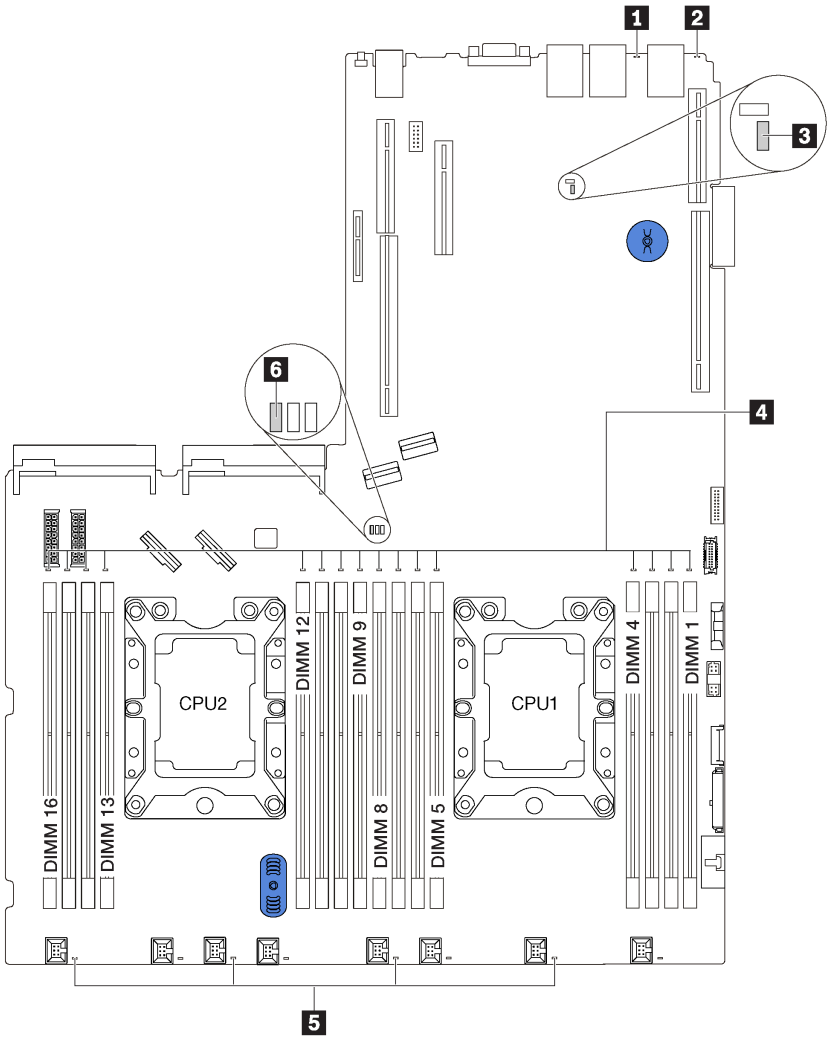

Figure 14. System board LEDs

1 System error LED	2 System ID LED
3 XClarity Controller heartbeat LED	4 DIMM error LEDs
5 System fan error LEDs	6 System power LED

Internal cable routing

Some of the components in the server have internal cables and cable connectors.

To connect cables, observe the following guidelines:

- Turn off the server before you connect or disconnect any internal cables.
- See the documentation that comes with any external devices for additional cabling instructions. It might be easier for you to route cables before you connect the devices to the server.
- Cable identifiers of some cables are printed on the cables that come with the server and optional devices. Use these identifiers to connect the cables to the correct connectors.
- Ensure that the cable is not pinched and does not cover any connectors or obstruct any components on the system board.
- Ensure that the relevant cables pass through the cable clips.

Note: Disengage all latches, release tabs, or locks on cable connectors when you disconnect cables from the system board. Failing to release them before removing the cables will damage the cable sockets on the system board, which are fragile. Any damage to the cable sockets might require replacing the system board.

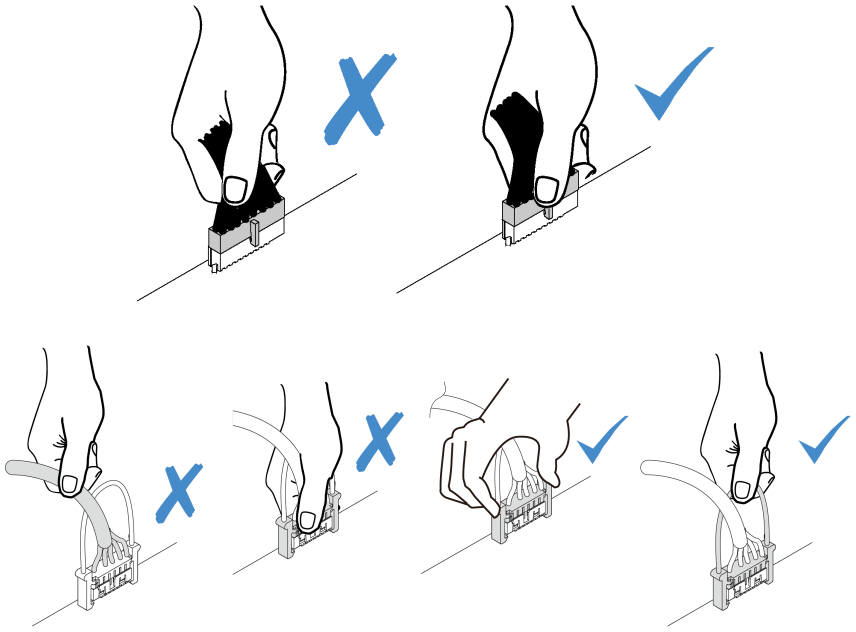

VGA connector

Use the section to understand the cable routing for the VGA connector on the left rack latch.

Note: The VGA connector is available on some models.

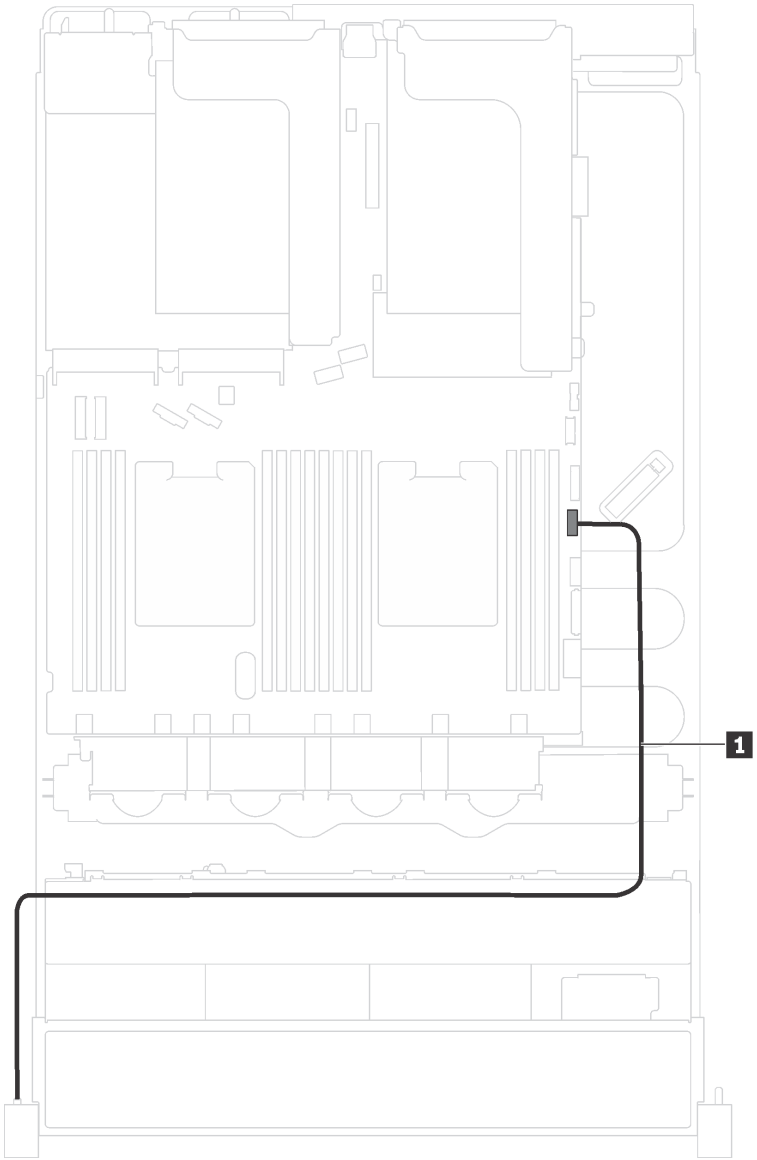

Figure 15. VGA connector cable routing

From	To
VGA cable on the left rack latch	Front VGA connector on the system board

Front I/O assembly

Use the section to understand the cable routing for the front I/O assembly.

Front I/O assembly on the chassis

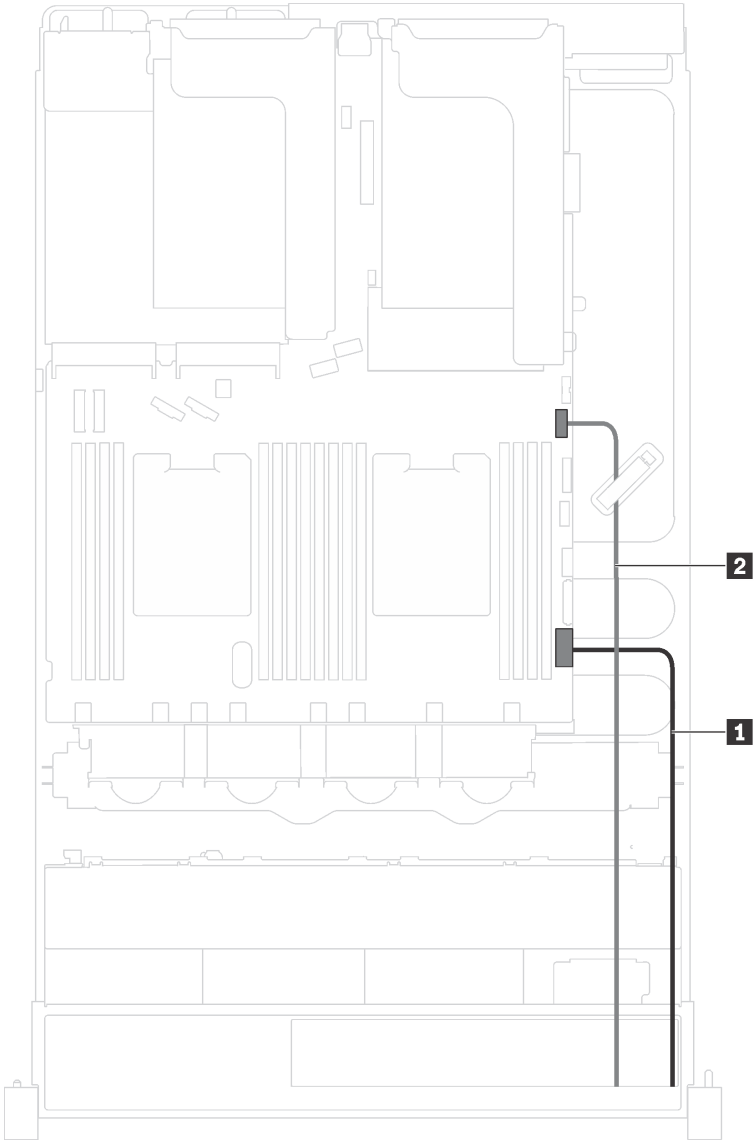

Figure 16. Cable routing for the front I/O assembly on the chassis

From	To
1 Operator-information-panel cable	Operator-information-panel connector on the system board
2 Front USB cable	Front USB connector on the system board

Front I/O assembly on the right rack latch

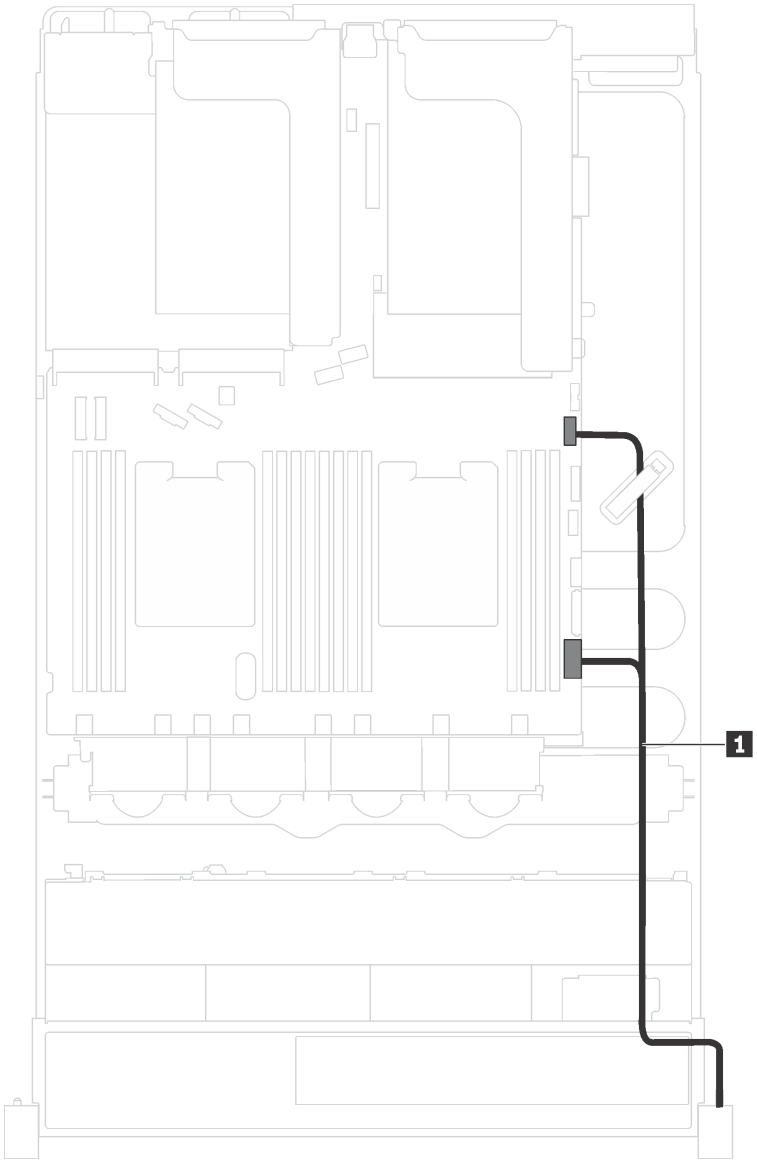

Figure 17. Cable routing for the front I/O assembly on the right rack latch

From	To
Front-I/O-assembly cable	Operator-information-panel connector and front USB connector on the system board

Backplane

Use the section to understand the cable routing for backplanes.

This topic contains the following information:

- “Server models with eight 2.5-inch drives” on page 37
- “Server models with sixteen 2.5-inch drives” on page 40
- “Server models with eight 3.5-inch drives” on page 44
- “Server models with twelve 3.5-inch drives” on page 46

Server models with eight 2.5-inch drives

Use this section to understand the cable routing for server models with eight 2.5-inch drives.

Server model: eight 2.5-inch SAS/SATA drives, one 8i RAID/HBA adapter

Note: The following illustration is based on the scenario that the RAID/HBA adapter is installed in PCIe slot 4 on the system board. If there is a serial port module installed in PCIe slot 4, the RAID/HBA adapter will be installed in PCIe slot 1 on riser 1. In both scenarios, the cable connections are the same.

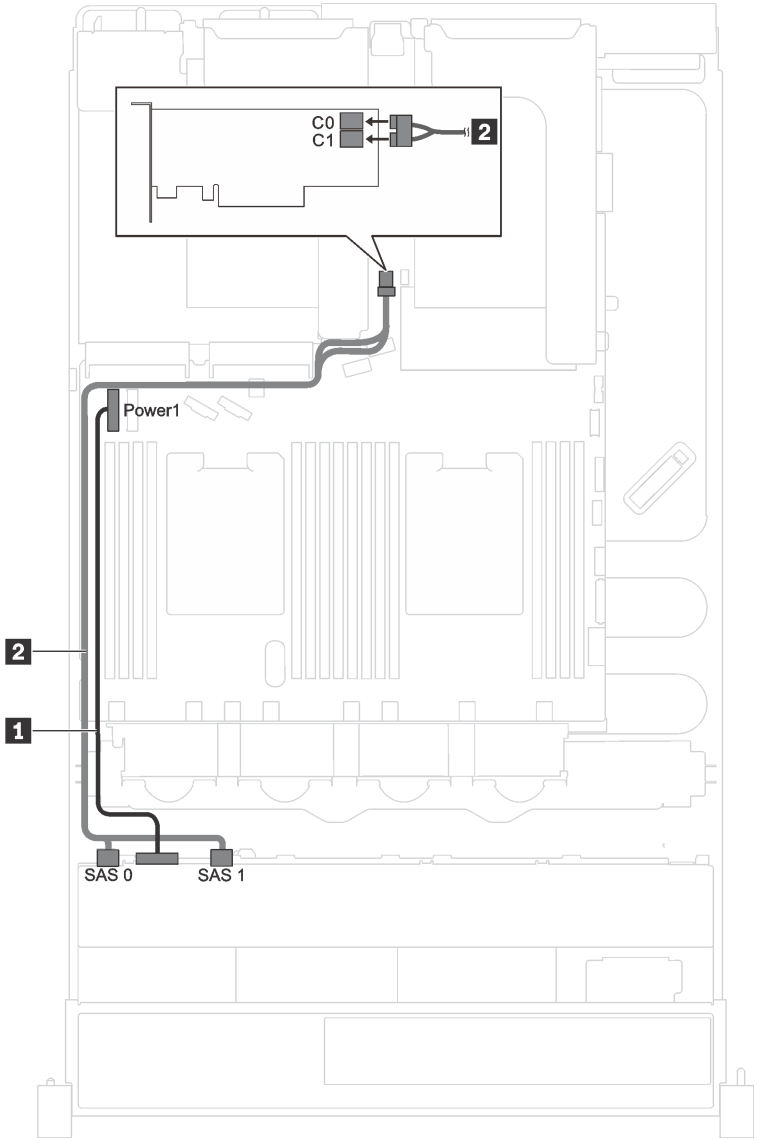

Figure 18. Cable routing for server models with eight 2.5-inch SAS/SATA drives and one 8i RAID/HBA adapter

Cable	From	To
1 Power cable	Power connector on the backplane	Backplane power connector 1 on the system board
2 SAS signal cable*	SAS 0 and SAS 1 connectors on the backplane	HBA/RAID adapter: • Gen 3: C0C1 • Gen 4: C0

Note: *When Gen 4 HBA/RAID adapter is installed, ensure you use Gen 4 SAS signal cable (ThinkSystem SR550/SR590/SR650 2.5" SAS/SATA/AnyBay 8-Bay X40 RAID Cable Kit).

Server model: four 2.5-inch SAS/SATA drives, four 2.5-inch SAS/SATA/NVMe drives, one 8i RAID/HBA adapter

Note: The following illustration is based on the scenario that the RAID/HBA adapter is installed in PCIe slot 4 on the system board. If there is a serial port module installed in PCIe slot 4, the RAID/HBA adapter will be installed in PCIe slot 1 on riser 1. In both scenarios, the cable connections are the same.

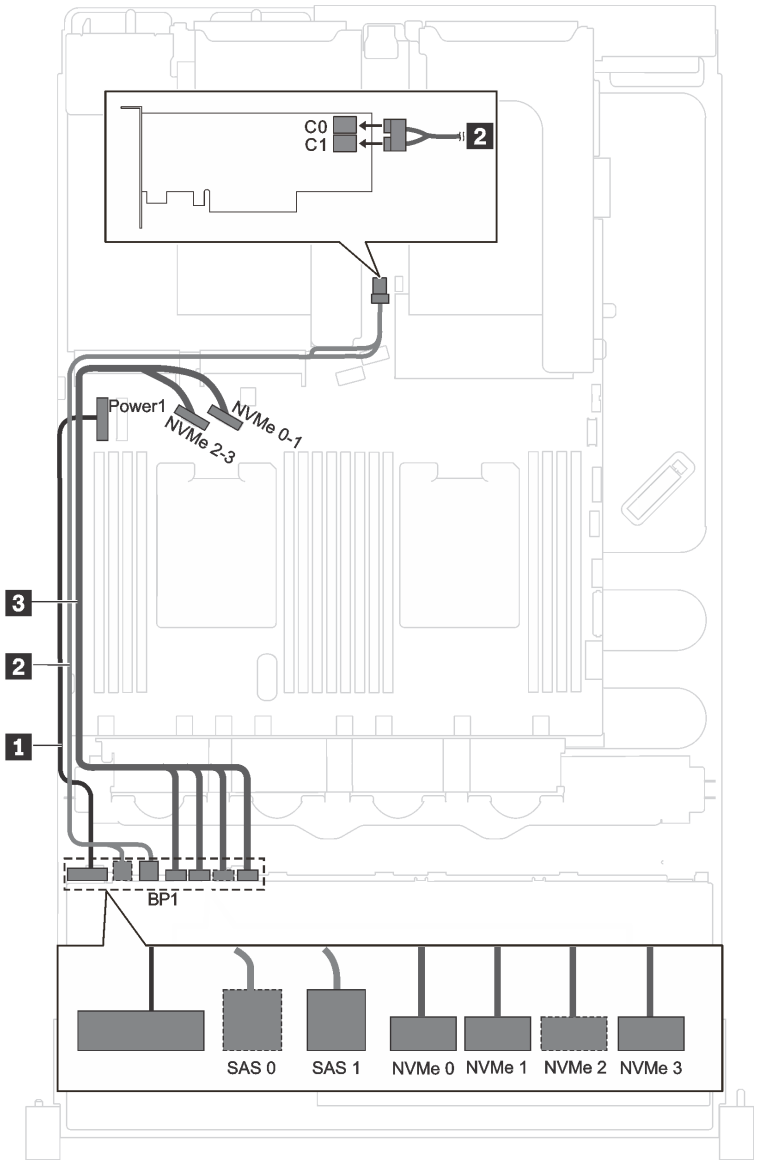

Figure 19. Cable routing for server models with four 2.5-inch SAS/SATA drives, four 2.5-inch SAS/SATA/NVMe drives, and one 8i RAID/HBA adapter

Cable	From	To
1 Power cable	Power connector on the backplane	Backplane power connector 1 on the system board
2 SAS signal cable*	SAS 0 and SAS 1 connectors on the backplane	HBA/RAID adapter: • Gen 3: C0C1 • Gen 4: C0
3 NVMe signal cable	NVMe 0, NVMe 1, NVMe 2, and NVMe 3 connectors on the backplane	NVMe 0–1 and 2–3 connectors on the system board

Note: *When Gen 4 HBA/RAID adapter is installed, ensure you use Gen 4 SAS signal cable (ThinkSystem SR550/SR590/SR650 2.5" SAS/SATA/AnyBay 8-Bay X40 RAID Cable Kit).

Server models with sixteen 2.5-inch drives

Use this section to understand the cable routing for server models with sixteen 2.5-inch drives.

Server model: sixteen 2.5-inch SAS/SATA drives, two 8i RAID/HBA adapters

Note: The following illustrations are based on the scenario that one RAID/HBA adapter is installed in PCIe slot 4 on the system board and the other one is installed in PCIe slot 1 on riser 1. If there is a serial port module installed in PCIe slot 4, the RAID/HBA adapters will be installed in PCIe slot 1 and PCIe slot 2 on riser 1. In both scenarios, the cable connections are the same.

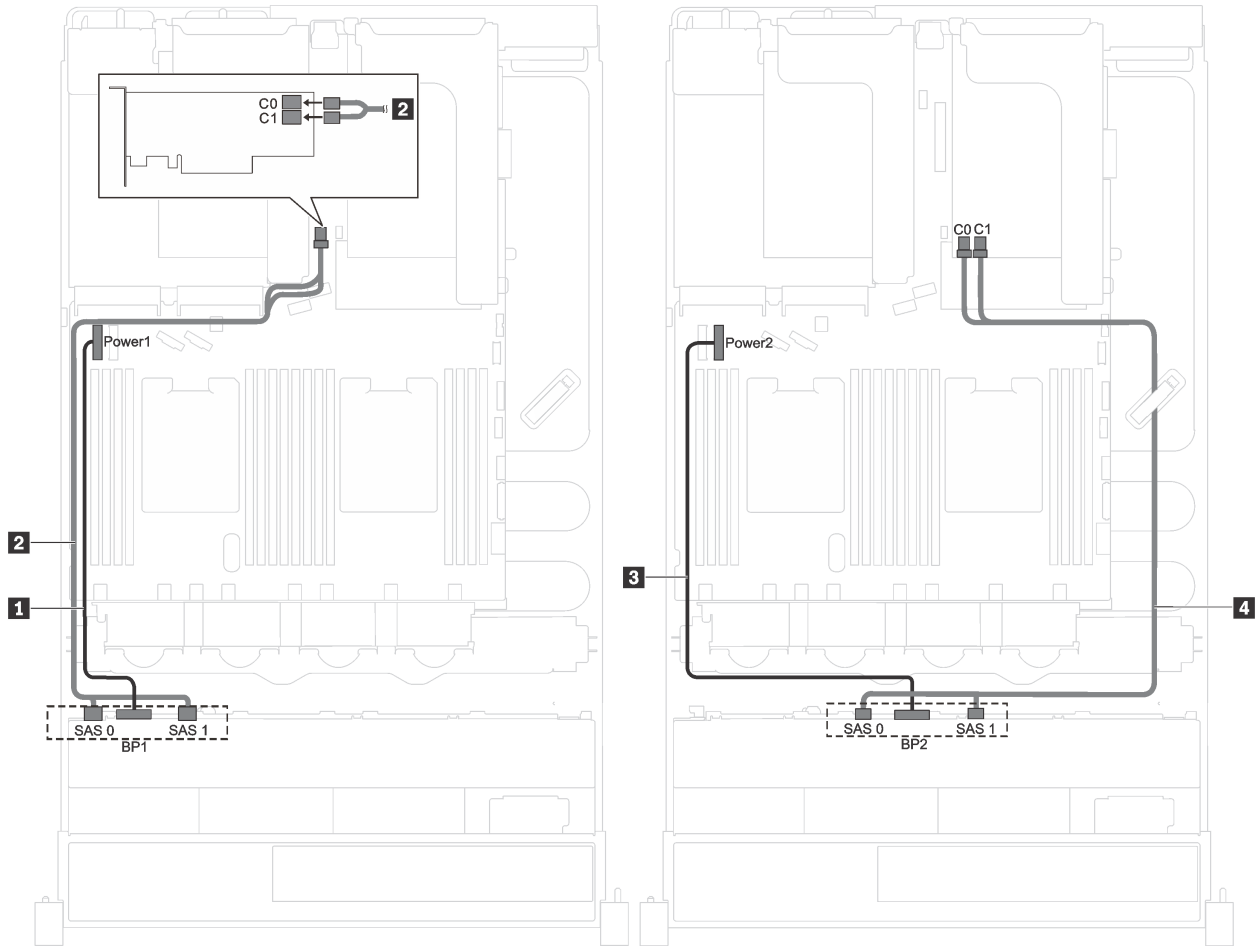

Figure 20. Cable routing for server models with sixteen 2.5-inch SAS/SATA drives and two 8i RAID/HBA adapters

Cable	From	To
1 Power cable for backplane 1	Power connector on backplane 1	Backplane power connector 1 on the system board
2 SAS signal cable for backplane 1*	SAS 0 and SAS 1 connectors on backplane 1	HBA/RAID adapter installed in PCIe slot 4: • Gen 3: C0C1 • Gen 4: C0

Cable	From	To
3 Power cable for backplane 2	Power connector on backplane 2	Backplane power connector 2 on the system board
4 SAS signal cable for backplane 2*	SAS 0 and SAS 1 connectors on backplane 2	HBA/RAID adapter installed in PCIe slot 1: • Gen 3: C0C1 • Gen 4: C0

Note: *When Gen 4 HBA/RAID adapter is installed, ensure you use Gen 4 SAS signal cable (ThinkSystem SR550/SR590/SR650 2.5" SAS/SATA/AnyBay 8-Bay X40 RAID Cable Kit).

Server model: sixteen 2.5-inch SAS/SATA drives, one 16i RAID/HBA adapter

Note: The following illustrations are based on the scenario that the RAID/HBA adapter is installed in PCIe slot 4 on the system board. If there is a serial port module installed in PCIe slot 4, the RAID/HBA adapter will be installed in PCIe slot 1 on riser 1. In both scenarios, the cable connections are the same.

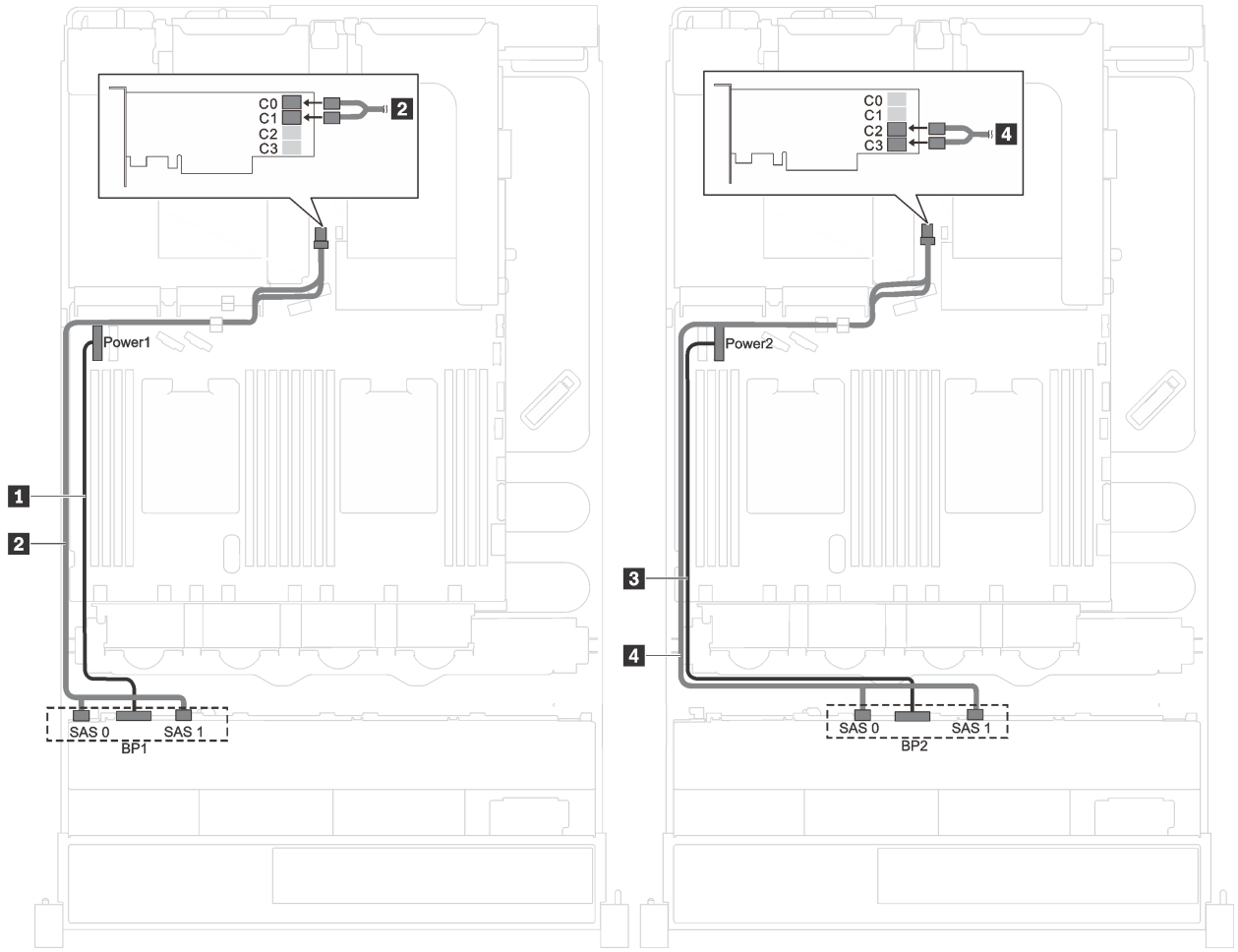

Figure 21. Cable routing for server models with sixteen 2.5-inch SAS/SATA drives and one 16i RAID/HBA adapter

Cable	From	To
1 Power cable for backplane 1	Power connector on backplane 1	Backplane power connector 1 on the system board
2 SAS signal cable for backplane 1*	SAS 0 and SAS 1 connectors on backplane 1	HBA/RAID adapter: • Gen 3: C0C1 • Gen 4: C0
3 Power cable for backplane 2	Power connector on backplane 2	Backplane power connector 2 on the system board
4 SAS signal cable for backplane 2*	SAS 0 and SAS 1 connectors on backplane 2	HBA/RAID adapter: • Gen 3: C2C3 • Gen 4: C1

Note: *When Gen 4 HBA/RAID adapter is installed, ensure you use Gen 4 SAS signal cable (ThinkSystem SR550/SR590/SR650 2.5" SAS/SATA/AnyBay 8-Bay X40 RAID Cable Kit).

Server model: twelve 2.5-inch SAS/SATA drives, four 2.5-inch SAS/SATA/NVMe drives, one 16i RAID/HBA adapter

Note: The following illustrations are based on the scenario that the RAID/HBA adapter is installed in PCIe slot 4 on the system board. If there is a serial port module installed in PCIe slot 4, the RAID/HBA adapter will be installed in PCIe slot 1 on riser 1. In both scenarios, the cable connections are the same.

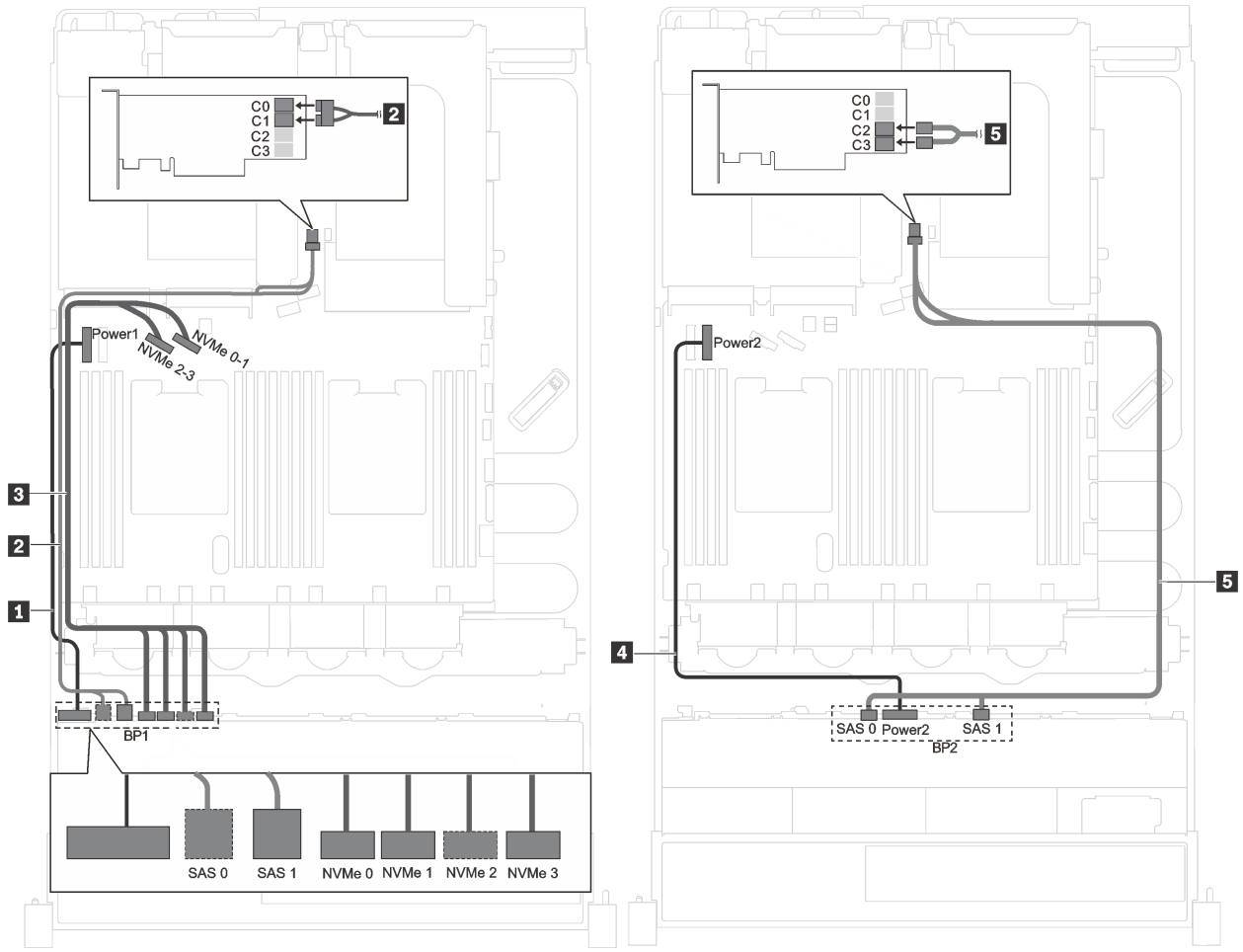

Figure 22. Cable routing for server models with twelve 2.5-inch SAS/SATA drives, four 2.5-inch SAS/SATA/NVMe drives, and one 16i RAID/HBA adapter

Cable	From	To
1 Power cable for backplane 1	Power connector on backplane 1	Backplane power connector 1 on the system board
2 SAS signal cable for backplane 1*	SAS 0 and SAS 1 connectors on backplane 1	HBA/RAID adapter: • Gen 3: C0C1 • Gen 4: C0
3 NVMe signal cable for backplane 1	NVMe 0, NVMe 1, NVMe 2, and NVMe 3 connectors on backplane 1	NVMe 0–1 and NVMe 2–3 connectors on the system board
4 Power cable for backplane 2	Power connector on backplane 2	Backplane power connector 2 on the system board
5 SAS signal cable for backplane 2*	SAS 0 and SAS 1 connectors on backplane 2	HBA/RAID adapter: • Gen 3: C2C3 • Gen 4: C1

Note: *When Gen 4 HBA/RAID adapter is installed, ensure you use Gen 4 SAS signal cable (ThinkSystem SR550/SR590/SR650 2.5" SAS/SATA/AnyBay 8-Bay X40 RAID Cable Kit).

Server models with eight 3.5-inch drives

Use this section to understand the cable routing for server models with eight 3.5-inch drives.

Server model: eight 3.5-inch hot-swap drives, one 8i RAID/HBA adapter

Note: The following illustration is based on the scenario that the RAID/HBA adapter is installed in PCIe slot 4 on the system board. If there is a serial port module installed in PCIe slot 4, the RAID/HBA adapter will be installed in PCIe slot 1 on riser 1. In both scenarios, the cable connections are the same.

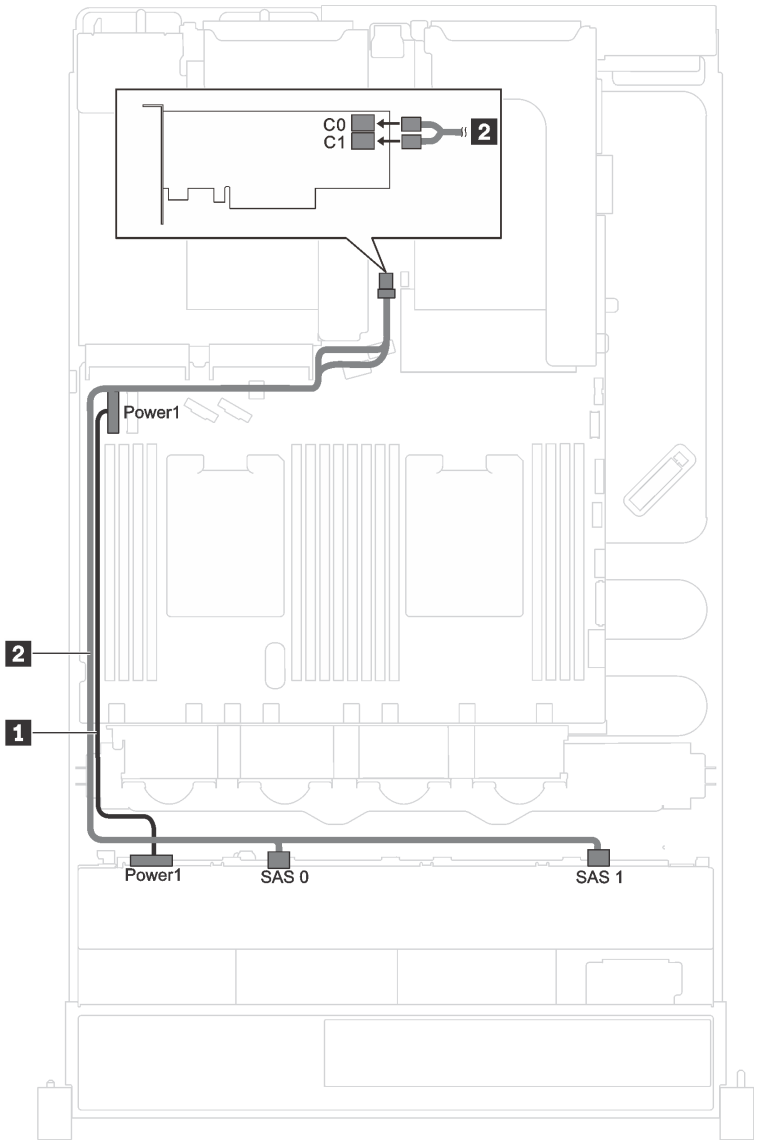

Figure 23. Cable routing for server models with eight 3.5-inch hot-swap drives and one 8i RAID/HBA adapter

Cable	From	To
1 Power cable	Power connector on the backplane	Backplane power connector 1 on the system board
2 SAS signal cable*	SAS 0 and SAS 1 connectors on the backplane	HBA/RAID adapter: • Gen 3: C0C1 • Gen 4: C0

Note: *When Gen 4 HBA/RAID adapter is installed, ensure you use Gen 4 SAS signal cable (ThinkSystem SR550/SR590/SR650 3.5" SAS/SATA 8-Bay X40 RAID Cable Kit).

Server model: eight 3.5-inch simple-swap drives

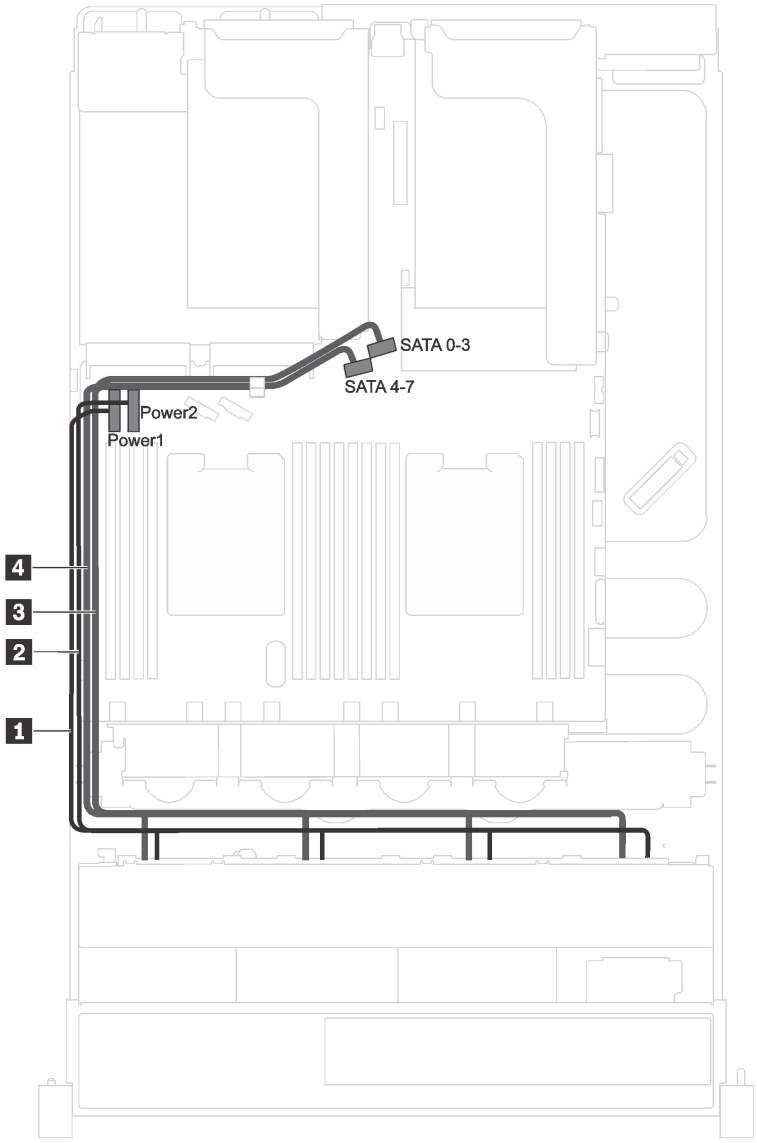

Figure 24. Cable routing for server models with eight 3.5-inch simple-swap drives

The simple-swap drive backplate assembly comes with two power cables and two signal cables. Connect the cables to the system board.

From	To
1 Power cable labeled with 0	Backplane power connector 1 on the system board
2 Power cable labeled with 1	Backplane power connector 2 on the system board
3 Mini-SAS cable labeled with 0	SATA 0-3 connector on the system board
4 Mini-SAS cable labeled with 1	SATA 4-7 connector on the system board

Server models with twelve 3.5-inch drives

Use this section to understand the cable routing for server models with twelve 3.5-inch drives.

Server model: twelve 3.5-inch SAS/SATA drives, one 16i RAID/HBA adapter

Notes: The following illustration is based on the scenario that the RAID/HBA adapter is installed in PCIe slot 4 on the system board. If there is a serial port module installed in PCIe slot 4, the RAID/HBA adapter will be installed in:

- PCIe slot 1 on riser 1 if there is no rear hot-swap drive assembly installed
- PCIe slot 6 on riser 2 if there is a rear hot-swap drive assembly installed

For both scenarios, the cable connections are the same.

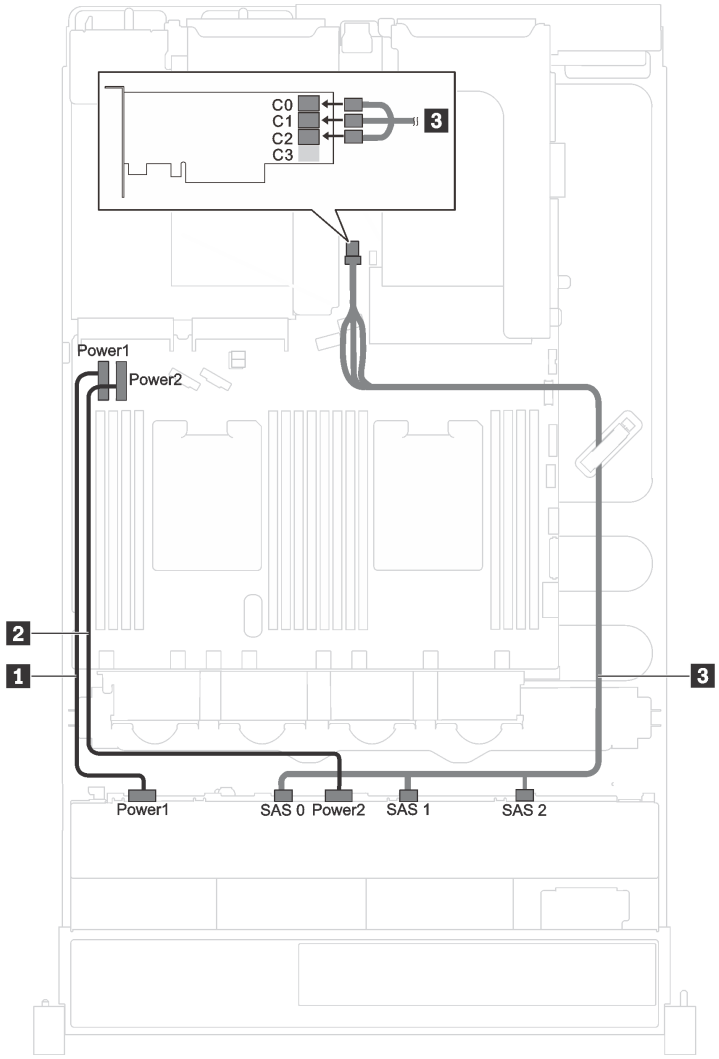

Figure 25. Cable routing for server models with twelve 3.5-inch SAS/SATA drives and one 16i RAID/HBA adapter

Cable	From	To
1 Power cable	Power connector 1 on the backplane	Backplane power connector 1 on the system board
2 Power cable	Power connector 2 on the backplane	Backplane power connector 2 on the system board
3 SAS signal cable*	SAS 0, SAS 1, and SAS 2 connectors on the backplane	HBA/RAID adapter: • Gen 3: C0C1C2 • Gen 4: C0C1

Note: *When Gen 4 HBA/RAID adapter is installed, ensure you use Gen 4 SAS signal cable (ThinkSystem SR590/SR650 3.5" SAS/SATA/AnyBay 12-Bay X40 RAID Cable Kit).

Server model: eight 3.5-inch SAS/SATA drives, four 3.5-inch NVMe drives, one 8i RAID/HBA adapter

Note: The following illustration is based on the scenario that the RAID/HBA adapter is installed in PCIe slot 4 on the system board. If there is a serial port module installed in PCIe slot 4, the RAID/HBA adapter will be installed in PCIe slot 1 on riser 1. For both scenarios, the cable connections are the same.

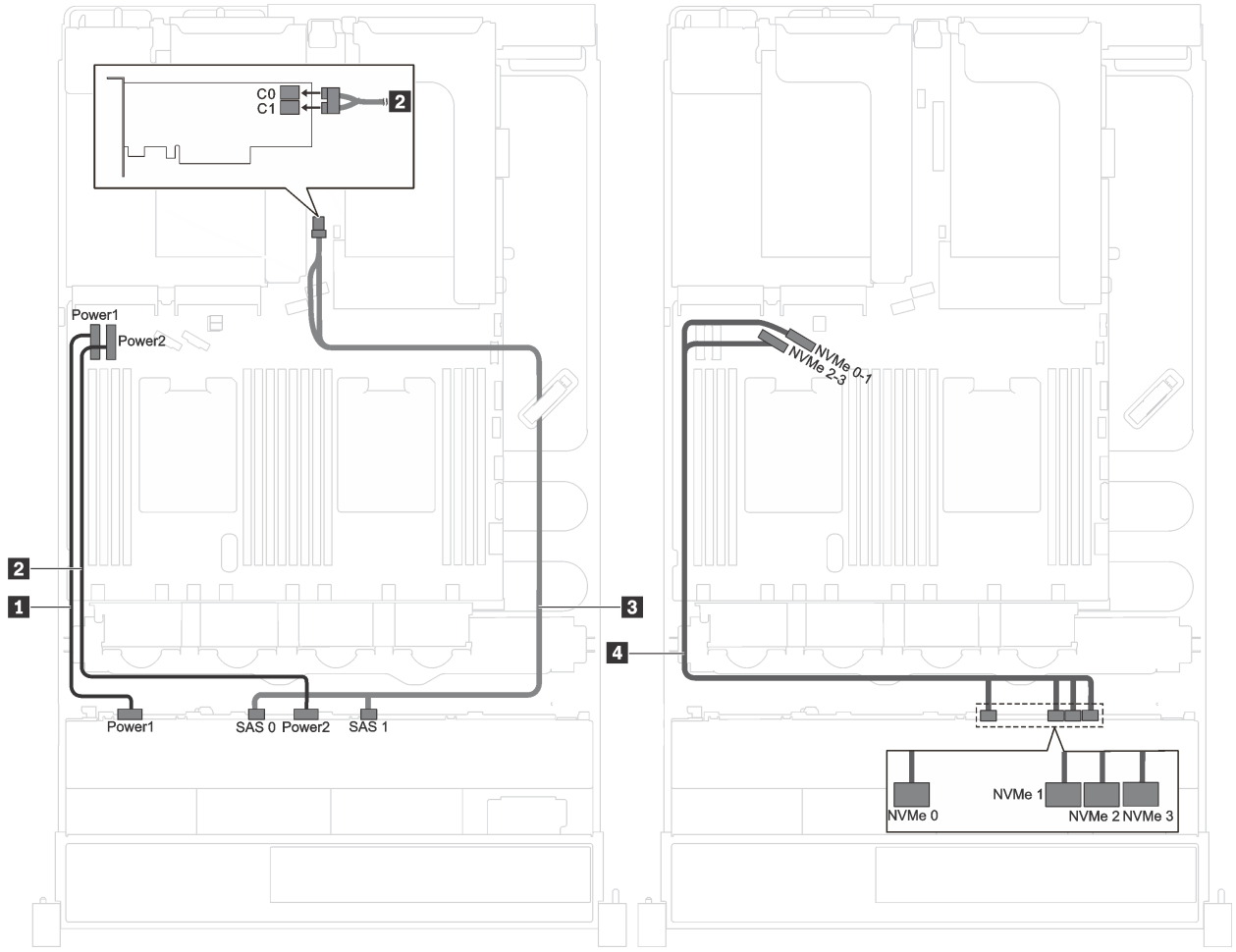

Figure 26. Cable routing for server models with eight 3.5-inch SAS/SATA drives, four 3.5-inch NVMe drives, and one 8i RAID/HBA adapter

Cable	From	To
1 Power cable	Power connector 1 on the backplane	Backplane power connector 1 on the system board
2 Power cable	Power connector 2 on the backplane	Backplane power connector 2 on the system board
3 SAS signal cable*	SAS 0 and SAS 1 connectors on the backplane	HBA/RAID adapter: • Gen 3: C0C1 • Gen 4: C0
4 NVMe signal cable	NVMe 0, NVMe 1, NVMe 2, and NVMe 3 connectors on the backplane	NVMe 0–1 and 2–3 connectors on the system board

Note: *When Gen 4 HBA/RAID adapter is installed, ensure you use Gen 4 SAS signal cable (ThinkSystem SR550/SR590/SR650 3.5" SAS/SATA 8-Bay X40 RAID Cable Kit).

Server model: eight 3.5-inch SAS/SATA drives, four 3.5-inch SAS/SATA/NVMe drives, one 16i RAID/HBA adapter

Notes: The following illustration is based on the scenario that the RAID/HBA adapter is installed in PCIe slot 4 on the system board. If there is a serial port module installed in PCIe slot 4, the RAID/HBA adapter will be installed in:

- PCIe slot 1 on riser 1 if there is no rear hot-swap drive assembly installed
- PCIe slot 6 on riser 2 if there is a rear hot-swap drive assembly installed

For both scenarios, the cable connections are the same.

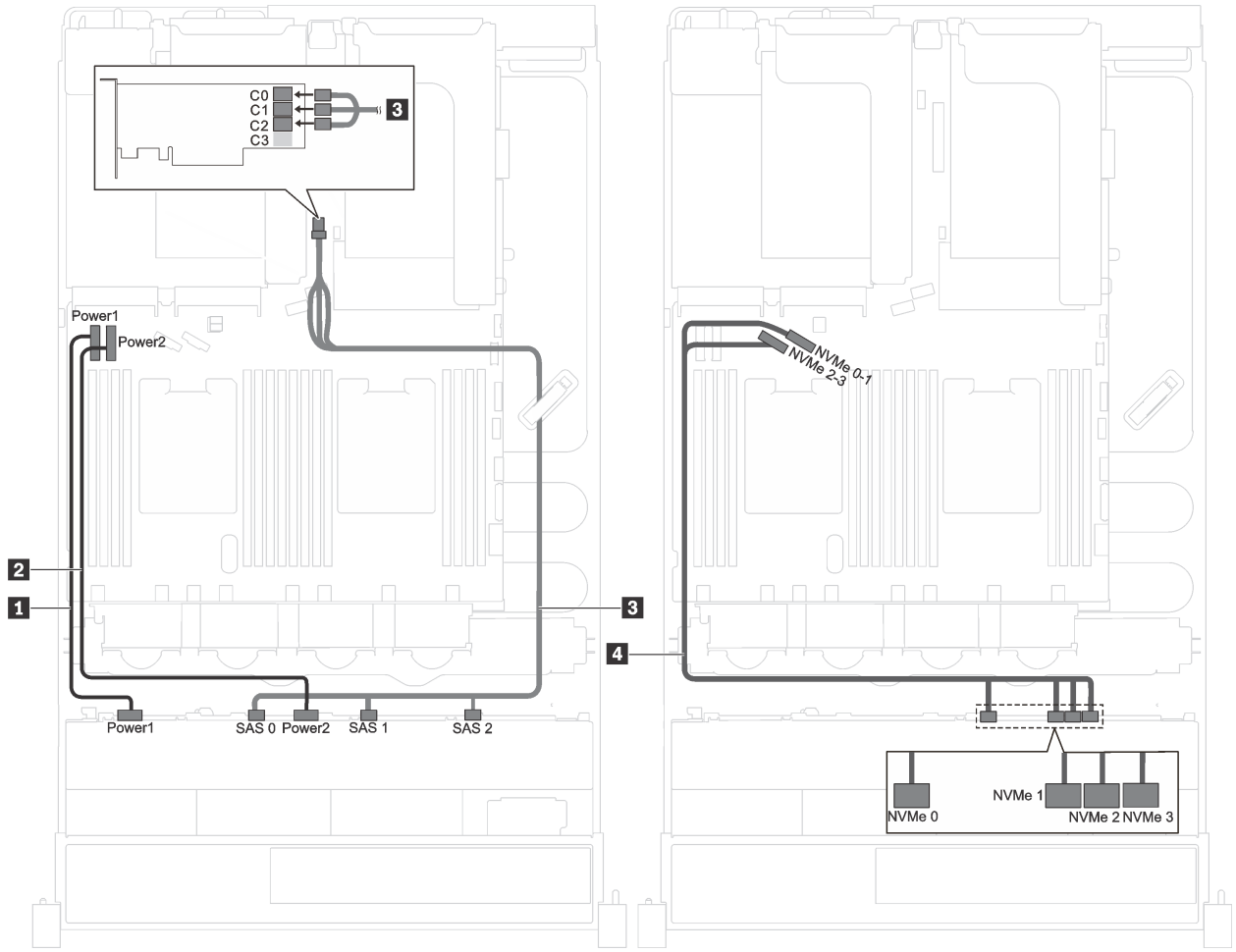

Figure 27. Cable routing for server models with eight 3.5-inch SAS/SATA drives, four 3.5-inch SAS/SATA/NVMe drives, and one 16i RAID/HBA adapter

Cable	From	To
1 Power cable	Power connector 1 on the backplane	Backplane power connector 1 on the system board
2 Power cable	Power connector 2 on the backplane	Backplane power connector 2 on the system board
3 SAS signal cable*	SAS 0, SAS 1, and SAS 2 connectors on the backplane	HBA/RAID adapter: • Gen 3: C0C1C2 • Gen 4: C0C1
4 NVMe signal cable	NVMe 0, NVMe 1, NVMe 2, and NVMe 3 connectors on the backplane	NVMe 0–1 and 2–3 connectors on the system board

Note: *When Gen 4 HBA/RAID adapter is installed, ensure you use Gen 4 SAS signal cable (ThinkSystem SR590/SR650 3.5" SAS/SATA/AnyBay 12-Bay X40 RAID Cable Kit).

Parts list

Use the parts list to identify each of the components that are available for your server.

For more information about ordering the parts shown in Figure 28 “Server components” on page 50:

http://datacentersupport.lenovo.com/us/en/products/servers/thinksystem/sr590/7x98/parts

Note: Depending on the model, your server might look slightly different from the following illustration. Some of the components might not be available on your server.

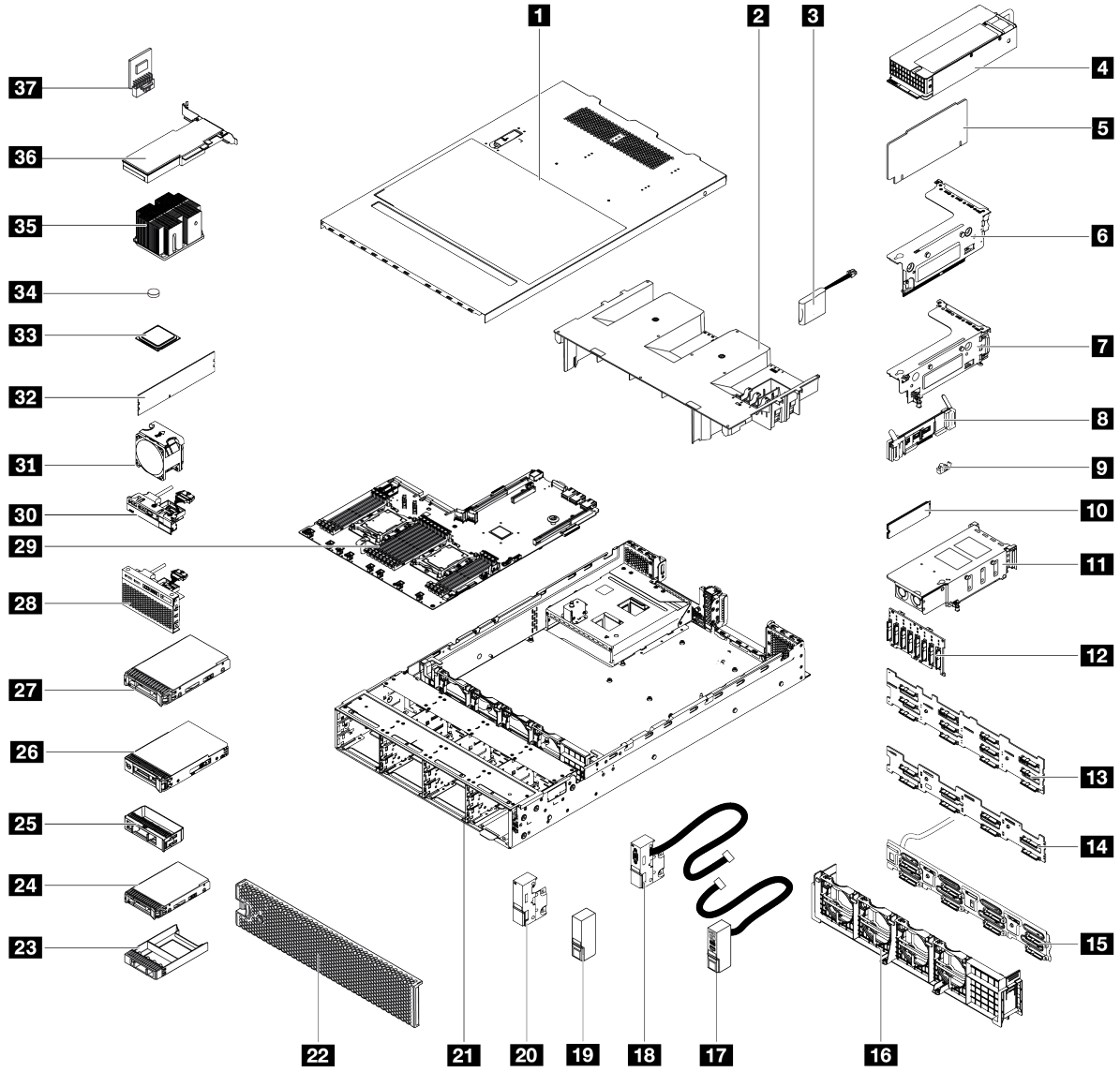

Figure 28. Server components

The parts listed in the following table are identified as one of the following:

- **Tier 1 customer replaceable unit (CRU):** Replacement of Tier 1 CRUs is your responsibility. If Lenovo installs a Tier 1 CRU at your request with no service agreement, you will be charged for the installation.
- **Tier 2 customer replaceable unit (CRU):** You may install a Tier 2 CRU yourself or request Lenovo to install it, at no additional charge, under the type of warranty service that is designated for your server.
- **Field replaceable unit (FRU):** FRUs must be installed only by trained service technicians.
- **Consumable and Structural parts:** Purchase and replacement of consumable and structural parts (components, such as a cover or bezel) is your responsibility. If Lenovo acquires or installs a structural component at your request, you will be charged for the service.

Table 10. Parts list

Index	Description	Tier 1 CRU	Tier 2 CRU	FRU	Consumable and Structural parts
For more information about ordering the parts shown in Figure 28 “Server components” on page 50, go to: http://datacentersupport.lenovo.com/us/en/products/servers/thinksystem/sr590/7x98/parts					
1	Top cover	√			
2	Air baffle				√
3	RAID super capacitor module	√			
4	Hot-swap power supply	√			
5	Riser card	√			
6	Riser 2 bracket	√			
7	Riser 1 bracket	√			
8	M.2 backplane	√			
9	M.2 retainer clip	√			
10	M.2 drive	√			
11	Rear hot-swap drive assembly	√			
12	Backplane, eight 2.5-inch hot-swap drives	√			
13	Backplane, twelve 3.5-inch hot-swap drives	√			
14	Backplane, eight 3.5-inch hot-swap drives	√			
15	Simple-swap-drive backplate assembly	√			
16	Fan cage				√
17	Right rack latch, with front I/O assembly	√			
18	Left rack latch, with VGA connector	√			
19	Right rack latch, without front I/O assembly				√
20	Left rack latch, without VGA connector				√
21	Chassis			√	
22	Security bezel	√			
23	Filler, 2.5-inch drive				√

Table 10. Parts list (continued)

Index	Description	Tier 1 CRU	Tier 2 CRU	FRU	Consumable and Structural parts
24	Storage drive, 2.5-inch, hot-swap	√			
25	Filler, 3.5-inch drive				√
26	Storage drive, 3.5-inch, simple-swap	√			
27	Storage drive, 3.5-inch, hot-swap	√			
28	Front I/O assembly, server models with eight or sixteen 2.5-inch drive bays	√			
29	System board			√	
30	Front I/O assembly, server models with eight 3.5-inch drive bays	√			
31	System fan	√			
32	Memory module (DCPMM module might look slightly from the illustration)	√			
33	Processor			√	
34	CMOS battery (CR2032)				√
35	Processor heat sink			√	
36	PCIe adapter	√			
37	TCM/TPM adapter (for Chinese Mainland only)			√	

Power cords

Several power cords are available, depending on the country and region where the server is installed.

To view the power cords that are available for the server:

1. Go to:

   http://dcsc.lenovo.com/#/

2. Click **Preconfigured Model** or **Configure to order**.
3. Enter the machine type and model for your server to display the configurator page.
4. Click **Power → Power Cables** to see all line cords.

Notes:

- For your safety, a power cord with a grounded attachment plug is provided to use with this product. To avoid electrical shock, always use the power cord and plug with a properly grounded outlet.
- Power cords for this product that are used in the United States and Canada are listed by Underwriter's Laboratories (UL) and certified by the Canadian Standards Association (CSA).
- For units intended to be operated at 115 volts: Use a UL-listed and CSA-certified cord set consisting of a minimum 18 AWG, Type SVT or SJT, three-conductor cord, a maximum of 15 feet in length and a parallel blade, grounding-type attachment plug rated 15 amperes, 125 volts.
- For units intended to be operated at 230 volts (U.S. use): Use a UL-listed and CSA-certified cord set consisting of a minimum 18 AWG, Type SVT or SJT, three-conductor cord, a maximum of 15 feet in length and a tandem blade, grounding-type attachment plug rated 15 amperes, 250 volts.
- For units intended to be operated at 230 volts (outside the U.S.): Use a cord set with a grounding-type attachment plug. The cord set should have the appropriate safety approvals for the country in which the equipment will be installed.
- Power cords for a specific country or region are usually available only in that country or region.

Chapter 3. Server hardware setup

To set up the server, install any options that have been purchased, cable the server, configure and update the firmware, and install the operating system.

Server setup checklist

Use the server setup checklist to ensure that you have performed all tasks that are required to set up your server.

The server setup procedure varies depending on the configuration of the server when it was delivered. In some cases, the server is fully configured and you just need to connect the server to the network and an ac power source, and then you can power on the server. In other cases, the server needs to have hardware options installed, requires hardware and firmware configuration, and requires an operating system to be installed.

The following steps describe the general procedure for setting up a server:

1. Unpack the server package. See "Server package contents" on page 3.
2. Set up the server hardware.
   a. Install any required hardware or server options. See the related topics in "Install server hardware options" on page 59.
   b. If necessary, install the server into a standard rack cabinet by using the rail kit shipped with the server. See the *Rack Installation Instructions* that comes with optional rail kit.
   c. Connect the Ethernet cables and power cords to the server. See "Rear view" on page 24 to locate the connectors. See "Cable the server" on page 113 for cabling best practices.
   d. Power on the server. See "Power on the server" on page 113.

      Note: You can access the management processor interface to configure the system without powering on the server. Whenever the server is connected to power, the management processor interface is available. For details about accessing the management server processor, see:

      http://sysmgt.lenovofiles.com/help/topic/com.lenovo.systems.management.xcc.doc/dw1lm_c_chapter2_openingandusing.html
   e. Validate that the server hardware was set up successfully. See Validate server setup.
3. Configure the system.
   a. Connect the Lenovo XClarity Controller to the management network. See Set the network connection for the Lenovo XClarity Controller.
   b. Update the firmware for the server, if necessary. See "Update the firmware" on page 116.
   c. Configure the firmware for the server. See "Configure the firmware" on page 119.

      The following information is available for RAID configuration:

      - https://lenovopress.com/lp0578-lenovo-raid-introduction
      - https://lenovopress.com/lp0579-lenovo-raid-management-tools-and-resources
   d. Install the operating system. See "Deploy the operating system" on page 125.
   e. Back up the server configuration. See "Back up the server configuration" on page 126.
   f. Install the applications and programs for which the server is intended to be used.

© Copyright Lenovo 2017, 2021

Installation Guidelines

Use the installation guidelines to install components in your server.

Before installing optional devices, read the following notices carefully:

Attention: Prevent exposure to static electricity, which might lead to system halt and loss of data, by keeping static-sensitive components in their static-protective packages until installation, and handling these devices with an electrostatic-discharge wrist strap or other grounding system.

- Read the safety information and guidelines to ensure that you work safely.
  - A complete list of safety information for all products is available at:

    http://thinksystem.lenovofiles.com/help/topic/safety_documentation/pdf_files.html
  - The following guidelines are available as well: "Handling static-sensitive devices" on page 58 and "Working inside the server with the power on" on page 58.
- Make sure the components you are installing are supported by the server. For a list of supported optional components for the server, see https://static.lenovo.com/us/en/serverproven/index.shtml.
- When you install a new server, download and apply the latest firmware. This will help ensure that any known issues are addressed, and that your server is ready to work with optimal performance. Go to ThinkSystem SR590 Drivers and Software to download firmware updates for your server.

  Important: Some cluster solutions require specific code levels or coordinated code updates. If the component is part of a cluster solution, verify that the latest level of code is supported for the cluster solution before you update the code.
- It is good practice to make sure that the server is working correctly before you install an optional component.
- Keep the working area clean, and place removed components on a flat and smooth surface that does not shake or tilt.
- Do not attempt to lift an object that might be too heavy for you. If you have to lift a heavy object, read the following precautions carefully:
  - Make sure that you can stand steadily without slipping.
  - Distribute the weight of the object equally between your feet.
  - Use a slow lifting force. Never move suddenly or twist when you lift a heavy object.
  - To avoid straining the muscles in your back, lift by standing or by pushing up with your leg muscles.
- Make sure that you have an adequate number of properly grounded electrical outlets for the server, monitor, and other devices.
- Back up all important data before you make changes related to the disk drives.
- Have a small flat-blade screwdriver, a small Phillips screwdriver, and a T8 torx screwdriver available.
- To view the error LEDs on the system board and internal components, leave the power on.
- You do not have to turn off the server to remove or install hot-swap power supplies, hot-swap fans, or hot-plug USB devices. However, you must turn off the server before you perform any steps that involve removing or installing adapter cables, and you must disconnect the power source from the server before you perform any steps that involve removing or installing a riser card.
- Blue on a component indicates touch points, where you can grip to remove a component from or install it in the server, open or close a latch, and so on.
- Orange on a component or an orange label on or near a component indicates that the component can be hot-swapped if the server and operating system support hot-swap capability, which means that you can remove or install the component while the server is still running. (Orange can also indicate touch points on

hot-swap components.) See the instructions for removing or installing a specific hot-swap component for any additional procedures that you might have to perform before you remove or install the component.

- The Red strip on the drives, adjacent to the release latch, indicates that the drive can be hot-swapped if the server and operating system support hot-swap capability. This means that you can remove or install the drive while the server is still running.

  Note: See the system specific instructions for removing or installing a hot-swap drive for any additional procedures that you might need to perform before you remove or install the drive.

- After finishing working on the server, make sure you reinstall all safety shields, guards, labels, and ground wires.

Safety inspection checklist

Use the information in this section to identify potentially unsafe conditions with your server. As each machine was designed and built, required safety items were installed to protect users and service technicians from injury.

Notes:

1. The product is not suitable for use at visual display workplaces according to §2 of the Workplace Regulations.
2. The set-up of the server is made in the server room only.

CAUTION:
This equipment must be installed or serviced by trained personnel, as defined by the NEC, IEC 62368-1 & IEC 60950-1, the standard for Safety of Electronic Equipment within the Field of Audio/Video, Information Technology and Communication Technology. Lenovo assumes you are qualified in the servicing of equipment and trained in recognizing hazards energy levels in products. Access to the equipment is by the use of a tool, lock and key, or other means of security, and is controlled by the authority responsible for the location.

Important: Electrical grounding of the server is required for operator safety and correct system function. Proper grounding of the electrical outlet can be verified by a certified electrician.

Use the following checklist to verify that there are no potentially unsafe conditions:

1. Make sure that the power is off and the power cord is disconnected.
2. Check the power cord.
   - Make sure that the third-wire ground connector is in good condition. Use a meter to measure third-wire ground continuity for 0.1 ohm or less between the external ground pin and the frame ground.
   - Make sure that the power cord is the correct type.

     To view the power cords that are available for the server:

     a. Go to:

        http://dcsc.lenovo.com/#/

     b. In the Customize a Model pane:

        1) Click **Select Options/Parts for a Model**.
        2) Enter the machine type and model for your server.

     c. Click the Power tab to see all line cords.
   - Make sure that the insulation is not frayed or worn.
3. Check for any obvious non-Lenovo alterations. Use good judgment as to the safety of any non-Lenovo alterations.

4. Check inside the server for any obvious unsafe conditions, such as metal filings, contamination, water or other liquid, or signs of fire or smoke damage.
5. Check for worn, frayed, or pinched cables.
6. Make sure that the power-supply cover fasteners (screws or rivets) have not been removed or tampered with.

System reliability guidelines

The system reliability guidelines to ensure proper system cooling.

Make sure the following requirements are met:

- When the server comes with redundant power, a power supply must be installed in each power-supply bay.
- Adequate space around the server must be spared to allow server cooling system to work properly. Leave approximately 50 mm (2.0 in.) of open space around the front and rear of the server. Do not place any object in front of the fans.
- For proper cooling and airflow, refit the server cover before you turn the power on. Do not operate the server for more than 30 minutes with the server cover removed, for it might damage server components.
- Cabling instructions that come with optional components must be followed.
- A failed fan must be replaced within 48 hours since malfunction.
- A removed hot-swap fan must be replaced within 30 seconds after removal.
- A removed hot-swap drive must be replaced within two minutes after removal.
- A removed hot-swap power supply must be replaced within two minutes after removal.
- Every air baffle that comes with the server must be installed when the server starts (some servers might come with more than one air baffle). Operating the server with a missing air baffle might damage the processor.
- All processor sockets must contain either a socket cover or a processor with heat sink.
- When more than one processor is installed, fan population rules for each server must be strictly followed.

Working inside the server with the power on

Guidelines to work inside the server with the power on.

Attention: The server might stop and loss of data might occur when internal server components are exposed to static electricity. To avoid this potential problem, always use an electrostatic-discharge wrist strap or other grounding systems when working inside the server with the power on.

- Avoid loose-fitting clothing, particularly around your forearms. Button or roll up long sleeves before working inside the server.
- Prevent your necktie, scarf, badge rope, or long hair from dangling into the server.
- Remove jewelry, such as bracelets, necklaces, rings, cuff links, and wrist watches.
- Remove items from your shirt pocket, such as pens and pencils, in case they fall into the server as you lean over it.
- Avoid dropping any metallic objects, such as paper clips, hairpins, and screws, into the server.

Handling static-sensitive devices

Use this information to handle static-sensitive devices.

Attention: Prevent exposure to static electricity, which might lead to system halt and loss of data, by keeping static-sensitive components in their static-protective packages until installation, and handling these devices with an electrostatic-discharge wrist strap or other grounding system.

- Limit your movement to prevent building up static electricity around you.
- Take additional care when handling devices during cold weather, for heating would reduce indoor humidity and increase static electricity.
- Always use an electrostatic-discharge wrist strap or other grounding system, particularly when working inside the server with the power on.
- While the device is still in its static-protective package, touch it to an unpainted metal surface on the outside of the server for at least two seconds. This drains static electricity from the package and from your body.
- Remove the device from the package and install it directly into the server without putting it down. If it is necessary to put the device down, put it back into the static-protective package. Never place the device on the server or on any metal surface.
- When handling a device, carefully hold it by the edges or the frame.
- Do not touch solder joints, pins, or exposed circuitry.
- Keep the device from others' reach to prevent possible damages.

Install server hardware options

This section includes instructions for performing initial installation of optional hardware. Each component installation procedure references any tasks that need to be performed to gain access to the component being replaced.

Installation procedures are presented in the optimum sequence to minimize work.

Attention: To ensure the components you install work correctly without problems, read the following precautions carefully.

- Make sure the components you are installing are supported by the server. For a list of supported optional components for the server, see https://static.lenovo.com/us/en/serverproven/index.shtml.
- Always download and apply the latest firmware. This will help ensure that any known issues are addressed, and that your server is ready to work with optimal performance. Go to ThinkSystem SR590 Drivers and Software to download firmware updates for your server.
- It is good practice to make sure that the server is working correctly before you install an optional component.
- Follow the installation procedures in this section and use appropriate tools. Incorrectly installed components can cause system failure from damaged pins, damaged connectors, loose cabling, or loose components.

Remove the security bezel

Use this information to remove the security bezel.



"**Read** the installation Guidelines" on page 56

To remove the security bezel, complete the following steps:

Watch the procedure

A video of this procedure is available at https://www.youtube.com/playlist?list=PLYV5R7hVcs-CWR-jaBNs-3tuilrybHfUJ.

Step 1. Use the key to unlock the security bezel to the open position.

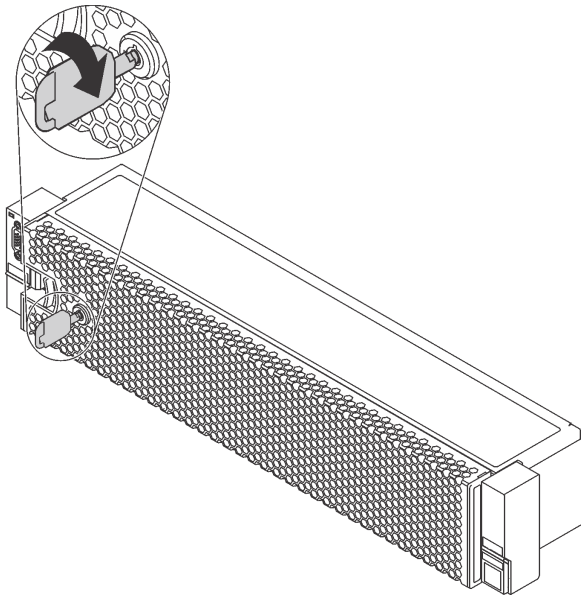

Figure 29. Unlocking the security bezel

Step 2. Press the release latch 1 and pivot the security bezel outward to remove it from the chassis.

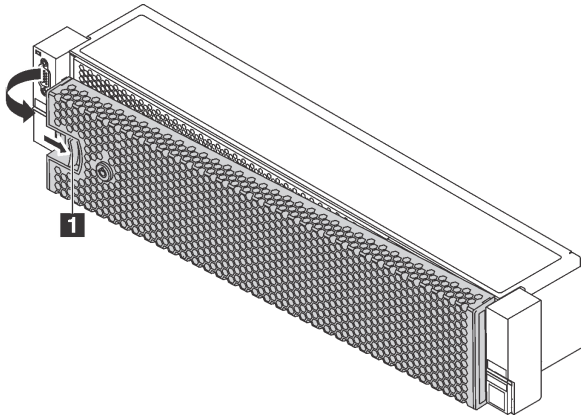

Figure 30. Security bezel removal

Attention: Before you ship the rack with the server installed, reinstall and lock the security bezel into place.

Remove the top cover

Use this information to remove the top cover.



"**Read** the installation Guidelines" on page 56

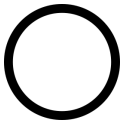

"**Power off** the server for this task" on page 113



"**ATTENTION: Static Sensitive Device** Ground package before opening" on page 58

S033



CAUTION:
Hazardous energy present. Voltages with hazardous energy might cause heating when shorted with metal, which might result in spattered metal, burns, or both.

S014



CAUTION:
Hazardous voltage, current, and energy levels might be present. Only a qualified service technician is authorized to remove the covers where the label is attached.

To remove the top cover, complete the following steps:

Watch the procedure

A video of this procedure is available at https://www.youtube.com/playlist?list=PLYV5R7hVcs-CWR-jaBNs-3tuilrybHfUJ.

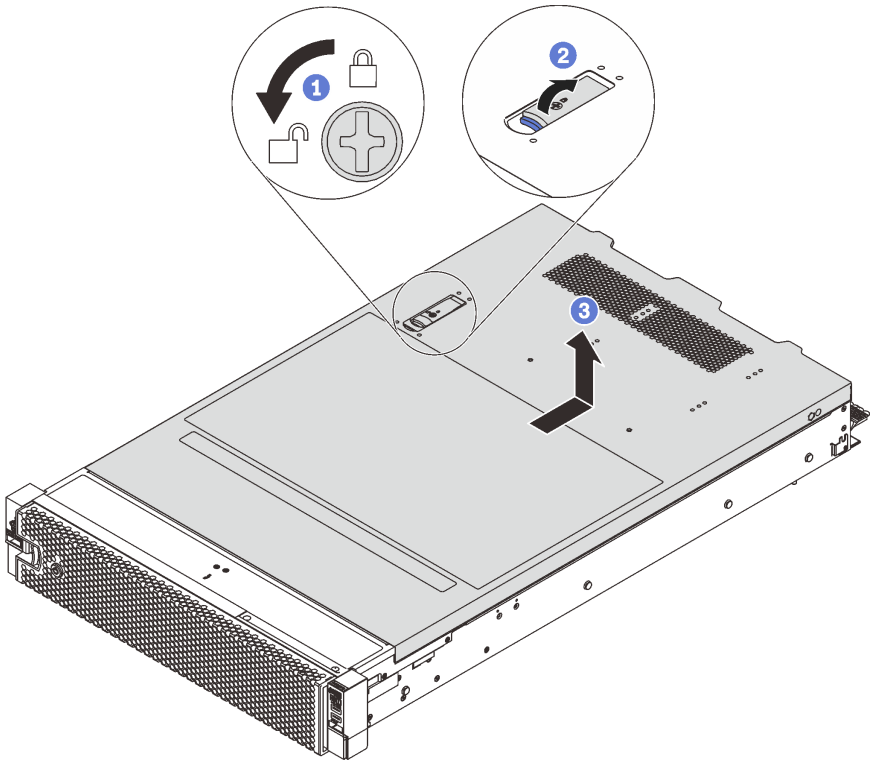

Figure 31. Top cover removal

Step 1. Use a screwdriver to turn the cover lock to the unlocked position as shown.

Step 2. Press the release button on the cover latch and then fully open the cover latch.

Step 3. Slide the top cover to the rear until it is disengaged from the chassis. Then, lift the top cover off the chassis and place the top cover on a flat clean surface.

Attention:

- Handle the top cover carefully. Dropping the top cover with the cover latch open might damage the cover latch.
- For proper cooling and airflow, install the top cover before you power on the server. Operating the server with the top cover removed might damage server components.

Remove the air baffle

If you intend to install hardware options in the server, you must first remove the air baffle from the server.



"**Read** the installation Guidelines" on page 56

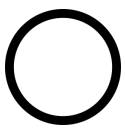

"**Power off** the server for this task" on page 113

S033



CAUTION:
Hazardous energy present. Voltages with hazardous energy might cause heating when shorted with metal, which might result in spattered metal, burns, or both.

S017



CAUTION:
Hazardous moving fan blades nearby. Keep fingers and other body parts away.

Before removing the air baffle, if there is a RAID super capacitor module installed on top of the air baffle, remove the RAID super capacitor module first.

To remove the air baffle, complete the following step:

Watch the procedure

A video of this procedure is available at https://www.youtube.com/playlist?list=PLYV5R7hVcs-CWR-jaBNs-3tuilrybHfUJ.

Step 1. Grasp the air baffle and carefully lift it out of the server.

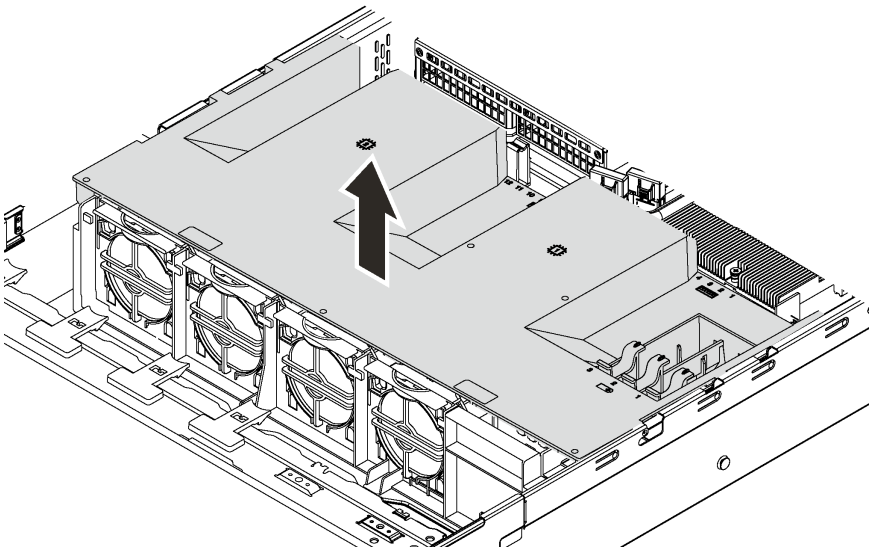

Figure 32. Air baffle removal

Remove the system fan cage

Use this information to remove the system fan cage if it impedes your access to some components.



"**Read** the installation Guidelines" on page 56

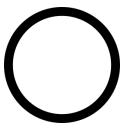

"**Power off** the server for this task" on page 113



"**ATTENTION: Static Sensitive Device** Ground package before opening" on page 58

To remove the system fan cage, complete the following step:

Watch the procedure

A video of this procedure is available at https://www.youtube.com/playlist?list=PLYV5R7hVcs-CWR-jaBNs-3tuilrybHfUJ.

Step 1. Press the latches at both sides to release the system fan cage and carefully lift it straight up and out of the chassis.

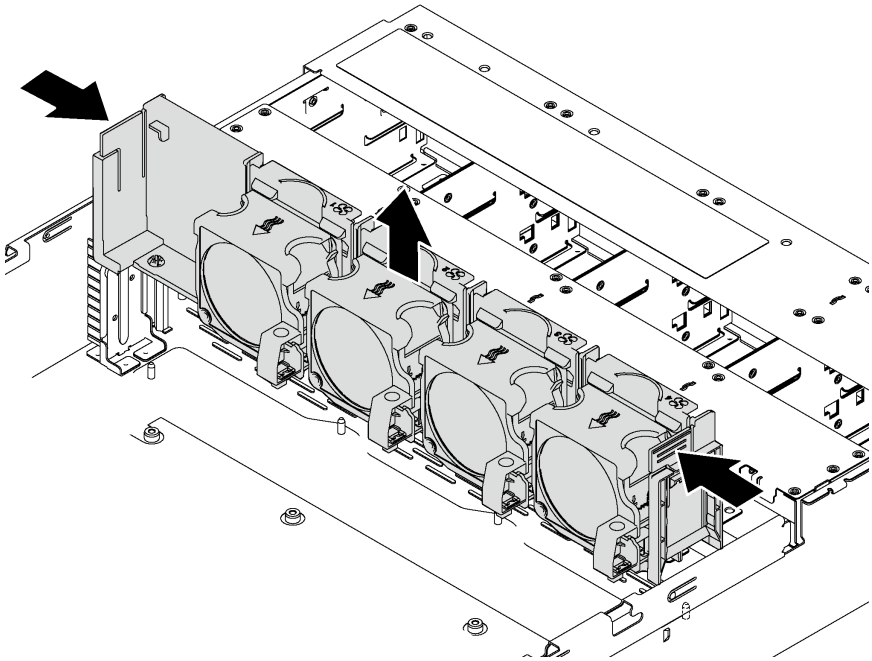

Figure 33. System fan cage removal

After removing the system fan cage, begin installing any options that you have purchased.

Install a processor-heat-sink module

This task has instructions for installing an assembled processor and heat sink, known as a processor-heat-sink module (PHM), a processor, and a heat sink. All of these tasks require a Torx T30 driver.

Note: If you are installing multiple options relating to the system board, the PHM installation should be performed first.

	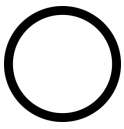	
"**Read** the installation Guidelines" on page 56	"**Power off** the server for this task" on page 113	"**ATTENTION: Static Sensitive Device** Ground package before opening" on page 58

Notes:

- PHMs are keyed for the socket where they can be installed and for their orientation in the socket.
- See https://static.lenovo.com/us/en/serverproven/index.shtml for a list of processors supported for your server. All processors on the system board must be of the same type, and have the same speed, number of cores, and frequency.
- Before you install a new PHM or replacement processor, update your system firmware to the latest level. See "Update the firmware" on page 116.

- Installing an additional PHM can change the memory requirements for your system. See "Memory module installation rules" on page 70 for a list of processor-to-memory relationships.
- When you install a processor, follow below rules to select a heat sink:
  - If you are going to install a processor with TDP lower than or equal to 125 watts, use the heat sink with part number 01KP655 or 01KP654.
  - If you are going to install one of the following processors, use the heat sink with part number 01KP652 or 01KP653:
    - Processor with TDP higher than 125 watts and lower than or equal to 150 watts
    - Intel Xeon® 5120T, 5122, 6126T, 6128, 6130T, 6138T, or 8156 processor
- Optional devices available for your system might have specific processor requirements. See the documentation that comes with the optional device for information.

Attention:

- Intel® Xeon® SP Gen 2 processors are supported on the system board with part number 01PE845. If you use the system board with part number 00MX680, update your system firmware to the latest level before installing an Intel® Xeon® SP Gen 2 processor. Otherwise, the system cannot be powered on.
- Each processor socket must always contain a cover or a PHM. When removing or installing a PHM, protect empty processor sockets with a cover.
- Do not touch the processor socket or processor contacts. Processor-socket contacts are very fragile and easily damaged. Contaminants on the processor contacts, such as oil from your skin, can cause connection failures.
- Remove and install only one PHM at a time. If the system board supports multiple processors, install the PHMs starting with the first processor socket.
- Do not allow the thermal grease on the processor or heat sink to come in contact with anything. Contact with any surface can compromise the thermal grease, rendering it ineffective. Thermal grease can damage components, such as electrical connectors in the processor socket. Do not remove the grease cover from a heat sink until you are instructed to do so.
- To ensure the best performance, check the manufacturing date on the new heat sink and make sure it does not exceed 2 years. Otherwise, wipe off the existing thermal grease and apply the new grease onto it for optimal thermal performance.

Step 1. Remove the processor socket cover, if one is installed on the processor socket, by placing your fingers in the half-circles at each end of the cover and lifting it from the system board.

Step 2. Install the processor-heat-sink module on the system board.

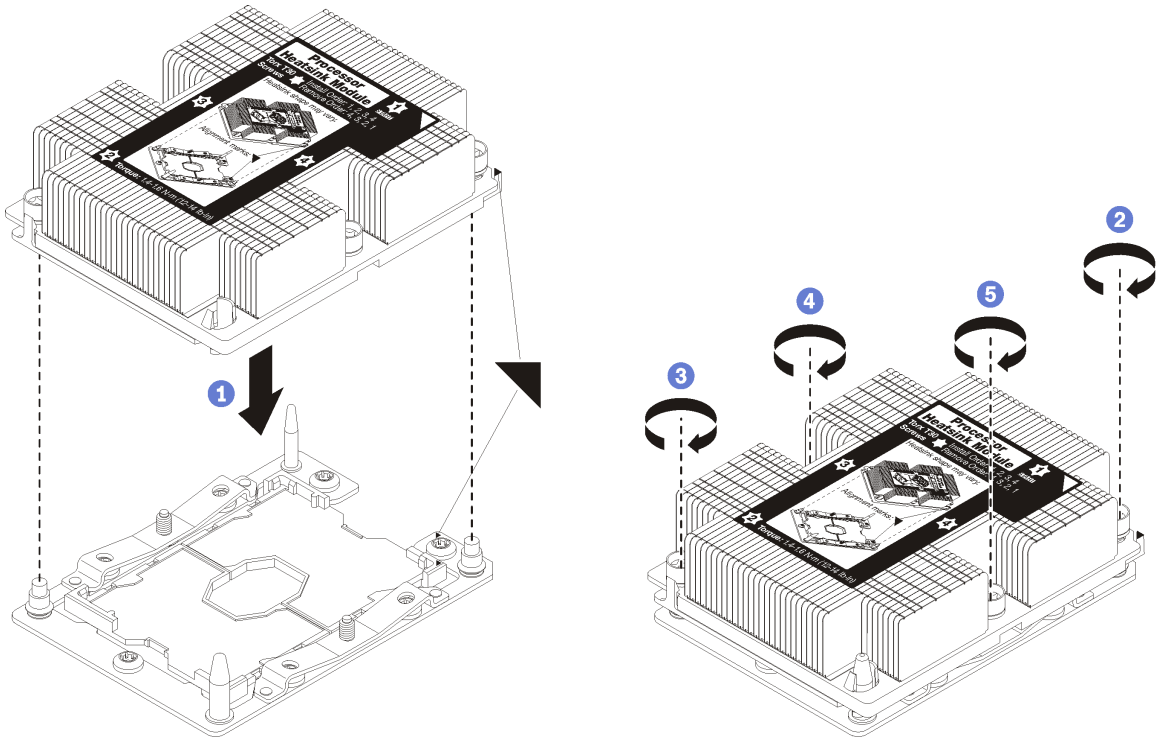

Figure 34. Installing a PHM

a. Align the triangular marks and guide pins on the processor socket with the PHM; then, insert the PHM into the processor socket.

   Attention: To prevent damage to components, make sure that you follow the indicated tightening sequence.

b. Fully tighten the Torx T30 captive fasteners *in the installation sequence shown* on the heat-sink label. Tighten the screws until they stop; then, visually inspect to make sure that there is no gap between the screw shoulder beneath the heat sink and the processor socket. (For reference, the torque required for the nuts to fully tighten is 1.4 — 1.6 newton-meters, 12 — 14 inch-pounds).

After installing the PHM:

1. If you are installing the second PHM, remove the fan filler and install the new system fan that comes with the processor option kit. See “Install a system fan” on page 98.

   Note: The Cascade Lake processor option kit does not come with a system fan. If you are installing a Cascade Lake processor, ensure that you have ordered the ThinkSystem SR590 FAN Option Kit and install it.

2. If there are memory modules to install, install them. See “Install a memory module” on page 66.

Install a memory module

Use this information to install a memory module. This section applies to both DRAM DIMMs and DCPMMs.

	“**Read** the installation Guidelines” on page 56	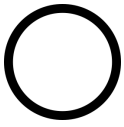 “**Power off** the server for this task” on page 113
	“**ATTENTION: Static Sensitive Device** Ground package before opening” on page 58	

Before installing a memory module:

1. If you are installing Intel Optane DC Persistent Memory modules (DCPMM) for the first time, follow the instructions in “DC Persistent Memory Module (DCPMM) setup” on page 68.
2. Touch the static-protective package that contains the new memory module to any unpainted surface on the outside of the server. Then, take the new memory module out of the package and place it on a static-protective surface.
3. Locate the required memory slot on the system board and ensure that you observe the installation rules and sequence. See “Memory module installation rules” on page 70.

Attention:

- Disconnect all power cords for this task.
- Memory modules are sensitive to static discharge and require special handling. Refer to the “Handling static-sensitive devices” on page 58 for standard guidelines:
  - Always wear an electrostatic-discharge strap when removing or installing memory modules. Electrostatic-discharge gloves can also be used.
  - Never hold two or more memory modules together. Do not stack memory modules directly on top of each other during storage.
  - Never touch the gold memory module connector contacts or allow these contacts to touch the outside of the memory module connector housing.
  - Handle memory modules with care: never bend, twist, or drop a memory module.
  - Do not use any metal tools (such as jigs or clamps) to handle the memory modules, because the rigid metals may damage the memory modules.
  - Do not insert memory modules while holding packages or passive components, which can cause package cracks or detachment of passive components by the high insertion force.

To install a memory module, complete the following steps:

Watch the procedure

A video of this procedure is available at https://www.youtube.com/playlist?list=PLYV5R7hVcs-CWR-jaBNs-3tuilrybHfUJ.

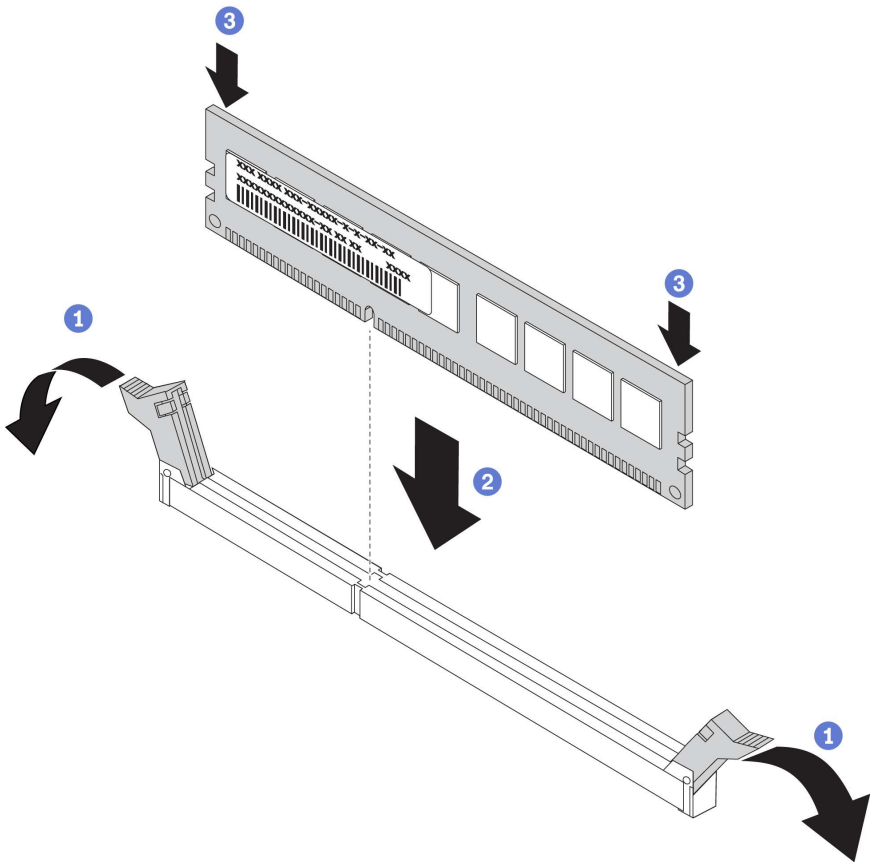

Figure 35. Memory module installation

Note: A DCPMM module looks slightly different from a DRAM DIMM in the illustration, but the installation method is the same.

Step 1. Open the retaining clips on each end of the memory slot.

Attention: To avoid breaking the retaining clips or damaging the memory slots, open and close the clips gently.

Step 2. Align the memory module with the slot, and gently place the memory module on the slot with both hands.

Step 3. Firmly press both ends of the memory module straight down into the slot until the retaining clips snap into the locked position.

Note: If there is a gap between the memory module and the retaining clips, the memory module has not been correctly inserted. In this case, open the retaining clips, remove the memory module, and then reinsert it.

DC Persistent Memory Module (DCPMM) setup

Follow the instructions in this section to complete required setup before installing DCPMMs for the first time, determine the most suitable configuration, and install memory modules accordingly.

Complete the following steps to finish system setup to support DCPMMs, and install the memory modules according to the designated combination.

1. Update the system firmware to the latest version that supports DCPMMs (see “Update the firmware” on page 116).

2. Make sure to meet all the following requirements before installing DCPMMs.
   - All the DCPMMs that are installed must be of the same part number.
   - All the DRAM DIMMs that are installed must be of the same type, rank, and capacity with minimum capacity of 16 GB. It is recommended to use Lenovo DRAM DIMMs of the same part number.
3. Refer to "DCPMM and DRAM DIMM installation rules" on page 75 to determine the most suitable combination and the following:
   - Number and capacity of the DCPMMs and DRAM DIMMs to install.
   - Check if the presently installed processors support the combination. If not, replace the processors with ones that support the combination.
4. Based on the determined DCPMM combination, acquire the DCPMMs, DRAM DIMMs and processors if necessary.
5. Replace the processors if necessary (see "Processor and heat sink replacement" in *Maintenance Manual*).
6. Remove all the memory modules that are installed (see "Remove a memory module" in *Maintenance Manual*).
7. Follow the slot combination in "DCPMM and DRAM DIMM installation rules" on page 75 to install all the DCPMMs and DRAM DIMMs (see "Install a memory module" on page 66).
8. Disable security on all the installed DCPMMs (see "Configure DC Persistent Memory Module (DCPMM)" on page 121).
9. Make sure the DCPMM firmware is the latest version. If not, update it to the latest version (see https://sysmgt.lenovofiles.com/help/topic/com.lenovo.lxca.doc/update_fw.html).
10. Configure DCPMMs so that the capacity is available for use (see "Configure DC Persistent Memory Module (DCPMM)" on page 121).

Adding memory modules to configuration with DCPMMs

Follow the instructions in this section to add memory modules to the existing configuration with DCPMMs.

If DCPMMs are already installed and configured in the system, complete the following steps to add new memory modules.

1. Update the system firmware to the latest version (see "Update the firmware" on page 116).
2. Consider the following DCPMM requirements before acquiring new DCPMM units.
   - All the DCPMMs that are installed must be of the same part number.
   - All the DRAM DIMMs that are installed must be of the same type, rank, and capacity with minimum capacity of 16 GB. It is recommended to use Lenovo DRAM DIMMs of the same part number.
3. See "DCPMM and DRAM DIMM installation rules" on page 75 to determine the new configuration, and acquire memory modules accordingly.
4. If the DCPMMs are in Memory Mode and will stay in Memory Mode after new units are installed, follow the combination in "Memory Mode" on page 78 to install the new modules in the correct slots. Otherwise, go to the next step.
5. Make sure to back up the stored data.
6. If the App Direct capacity is interleaved:
   a. Delete all the created namspaces and filesystems in the operating system.
   b. Perform secure erase on all the DCPMMs that are installed. Go to **Intel Optane DCPMMs → Security → Press to Secure Erase** to perform secure erase.

Note: If one or more DCPMMs are secured with passphrase, make sure security of every unit is disabled before performing secure erase. In case the passphrase is lost or forgotten, contact Lenovo service.

7. Follow the slot combination in "DCPMM and DRAM DIMM installation rules" on page 75 to install all the DCPMMs and DRAM DIMMs (see "Install a memory module" on page 66).
8. Disable security on all the installed DCPMMs (see "Configure DC Persistent Memory Module (DCPMM)" on page 121).
9. Make sure the DCPMM firmware is the latest version. If not, update it to the latest version (see https://sysmgt.lenovofiles.com/help/topic/com.lenovo.lxca.doc/update_fw.html).
10. Configure DCPMMs so that the capacity is available for use (see "Configure DC Persistent Memory Module (DCPMM)" on page 121).
11. Restore the data that have been backed up.

Memory module installation rules

Memory modules must be installed in a specific order based on the memory configuration that you implement on your server.

Your server has 16 memory slots, and supports the following types of memory modules depending on the processors installed:

- For Intel® Xeon® SP Gen 1 processors:
  - TruDDR4 2666, single-rank or dual-rank, 8 GB/16 GB/32 GB RDIMMs
  - TruDDR4 2666, quad-rank, 64 GB LRDIMMs
- For Intel® Xeon® SP Gen 2 processors:
  - TruDDR4 2666, single-rank or dual-rank, 16 GB/32 GB RDIMMs
  - DDR4 2933, single-rank or dual-rank, 8 GB/16 GB/32 GB/64 GB RDIMMs
  - 128 GB, 256 GB, or 512 GB DCPMMs

For a list of supported memory options, see: https://static.lenovo.com/us/en/serverproven/index.shtml

Depending on the memory modules installed, refer to below topics for detailed installation rules:.

- Without DCPMMs: "DRAM DIMM installation rules" on page 71
- With DCPMMs: "DCPMM and DRAM DIMM installation rules" on page 75

The following illustration helps you to locate the memory slots on the system board.

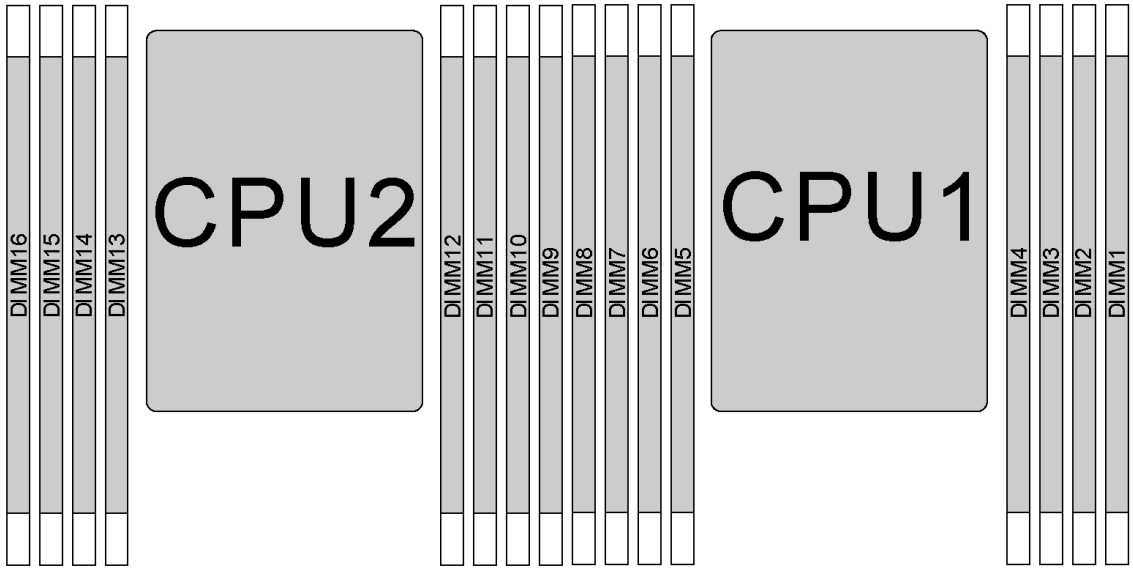

Figure 36. DIMM locations

The following table shows the relationship between the processors, memory controllers, memory channels, slots, and DIMM numbers. For each memory controller, channel 0 has two DIMM slots (slot 0, furthest from the processor, and slot 1, closest to the processor), and channel 1 and channel 2 have only one DIMM slot (slot 0).

Processor	CPU2								CPU1							
Integrated Memory Controller (iMC)	iMC1				iMC0				iMC1				iMC0			
Channel (CH)	C-H2	C-H1	CH0		CH0		C-H1	C-H2	C-H2	C-H1	CH0		CH0		C-H1	C-H2
Slot	0	0	0	1	1	0	0	0	0	0	0	1	1	0	0	0
DIMM number	16	15	14	13	12	11	10	9	8	7	6	5	4	3	2	1

DRAM DIMM installation rules

For RDIMMs or LRDIMMs, the following memory modes are available:

- "Independent mode" on page 72
- "Mirroring mode" on page 73
- "Rank sparing mode" on page 73

Notes:

- All DIMMs to be installed must be the same type. Do not mix RDIMM and LRDIMM in the same server.

- When you install DIMMs with same rank and different capacity, install the DIMM that has the highest capacity first.
- When you install DIMMs with different rank, install the DIMM with highest rank first.

Independent mode

Independent mode provides high performance memory capability. You can populate all channels with no matching requirements. Individual channels can run at different DIMM timings, but all channels must run at the same interface frequency.

Independent mode with one processor

Note: If there are three identical DIMMs to be installed for CPU1, and the three DIMMs have the same Lenovo part number, install the DIMMs in slots 1, 2, and 3.

Table 11. Memory population order

Total DIMMs	Processor 1								Total DIMMs
	8	7	6	5	4	3	2	1	
1						3			1
2			6			3			2
3			6			3	2		3
4		7	6			3	2		4
5		7	6			3	2	1	5
6	8	7	6			3	2	1	6
7	8	7	6		4	3	2	1	7
8	8	7	6	5	4	3	2	1	8

Independent mode with two processors

Notes:

- If there are three identical DIMMs to be installed for CPU1, and the three DIMMs have the same Lenovo part number, install the DIMMs in slots 1, 2, and 3.
- If there are three identical DIMMs to be installed for CPU2, and the three DIMMs have the same Lenovo part number, install the DIMMs in slots 9, 10, and 11.

Table 12. Memory population order

Total	Processor 2								Processor 1								Total
DIMMs	16	15	14	13	12	11	10	9	8	7	6	5	4	3	2	1	DIMMs
2						11								3			2
3						11					6			3			3
4			14			11					6			3			4
5			14			11					6			3	2		5
6			14			11	10				6			3	2		6
7			14			11	10			7	6			3	2		7
8		15	14			11	10			7	6			3	2		8
9		15	14			11	10			7	6			3	2	1	9
10		15	14			11	10	9		7	6			3	2	1	10

Table 12. Memory population order (continued)

Total DIMMs	Processor 2								Processor 1								Total DIMMs
	16	15	14	13	12	11	10	9	8	7	6	5	4	3	2	1	
11		15	14			11	10	9	8	7	6			3	2	1	**11**
12	16	15	14			11	10	9	8	7	6			3	2	1	**12**
13	16	15	14			11	10	9	8	7	6		4	3	2	1	**13**
14	16	15	14		12	11	10	9	8	7	6		4	3	2	1	**14**
15	16	15	14		12	11	10	9	8	7	6	5	4	3	2	1	**15**
16	16	15	14	13	12	11	10	9	8	7	6	5	4	3	2	1	**16**

Mirroring mode

In mirroring mode, each DIMM in a pair must be identical in size and architecture. The channels are grouped in pairs with each channel receiving the same data. One channel is used as a backup of the other, which provides redundancy.

Note: All DIMMs to be installed must be the same type with the same capacity, frequency, voltage, and ranks.

Mirroring mode with one processor

Table 13. Memory population order

Total DIMMs	Processor 1								Total DIMMs
	8	7	6	5	4	3	2	1	
2						3	2		**2**
3						3	2	1	**3**
4		7	6			3	2		**4**
6	8	7	6			3	2	1	**6**

Mirroring mode with two processors

Table 14. Memory population order

Total DIMMs	Processor 2								Processor 1								Total DIMMs
	16	15	14	13	12	11	10	9	8	7	6	5	4	3	2	1	
4						11	10							3	2		**4**
5						11	10							3	2	1	**5**
6						11	10	9						3	2	1	**6**
8		15	14			11	10			7	6			3	2		**8**
9						11	10	9	8	7	6			3	2	1	**9**
10		15	14			11	10		8	7	6			3	2	1	**10**
12	16	15	14			11	10	9	8	7	6			3	2	1	**12**

Rank sparing mode

In rank sparing mode, one rank of a DIMM works as the spare rank for the other ranks on the same channel. The spare rank is not available as system memory.

Notes:

- All DIMMs to be installed must be the same type with the same capacity, frequency, voltage, and ranks.
- Single-rank RDIMMs do not support rank sparing mode.

Rank sparing mode with one processor

Table 15. Memory population order

Total DIMMs	Processor 1								Total DIMMs
	8	7	6	5	4	3	2	1	
1						3			1
2			6			3			2
3			6			3	2		3
4		7	6			3	2		4
5		7	6			3	2	1	5
6	8	7	6			3	2	1	6
7	8	7	6		4	3	2	1	7
8	8	7	6	5	4	3	2	1	8

Rank sparing mode with two processors

Table 16. Memory population order

Total DIMMs	Processor 2								Processor 1								Total DIMMs
	16	15	14	13	12	11	10	9	8	7	6	5	4	3	2	1	
2						11								3			2
3						11					6			3			3
4			14			11					6			3			4
5			14			11					6			3	2		5
6			14			11	10				6			3	2		6
7			14			11	10			7	6			3	2		7
8		15	14			11	10			7	6			3	2		8
9		15	14			11	10			7	6			3	2	1	9
10		15	14			11	10	9		7	6			3	2	1	10
11		15	14			11	10	9	8	7	6			3	2	1	11
12	16	15	14			11	10	9	8	7	6			3	2	1	12
13	16	15	14			11	10	9	8	7	6		4	3	2	1	13
14	16	15	14		12	11	10	9	8	7	6		4	3	2	1	14
15	16	15	14		12	11	10	9	8	7	6	5	4	3	2	1	15
16	16	15	14	13	12	11	10	9	8	7	6	5	4	3	2	1	16

DCPMM and DRAM DIMM installation rules

For Intel Optane DC Persistent Memory (DCPMM), the following memory modes are available:

- "App Direct Mode" on page 75
- "Mixed Memory Mode" on page 76
- "Memory Mode" on page 78

Notes:

- Before installing DCPMMs and DRAM DIMMs, refer to "DC Persistent Memory Module (DCPMM) setup" on page 68 and make sure to meet all the requirements.
- To verify if the presently installed processors support DCPMMs, examine the four digits in the processor description. Only processors with description meeting *both* of the following requirements support DCPMMs.
  - The first digit is ***5*** or a larger number.

    Note: The only exception to this rule is *Intel Xeon Silver 4215*, which also supports DCPMM.
  - The second digit is ***2***.

  Example: *Intel Xeon **52**15L* and *Intel Xeon Platinum **82**80M*

  If the presently installed processors do not support DCPMMs, replace them with the processors that support DCPMMs.
- Supported memory capacity range varies with the following types of processors:
  - **Large memory tier (L):** The processors with **L** after the four digits (for example: *Intel Xeon 5215**L***)
  - **Medium memory tier (M):** The processors with **M** after the four digits (for example: *Intel Xeon Platinum 8280**M***)
  - **Other:** Other processors that support DCPMMs (for example: *Intel Xeon Gold 5222*)

In addition, you can take advantage of a memory configurator, which is available at the following site:

http://1config.lenovo.com/#/memory_configuration

App Direct Mode

In this mode, DCPMMs act as independent and persistent memory resources directly accessible by specific applications, and DRAM DIMMs act as system memory. The total displayed system memory in this mode is the total capacity of DRAM DIMMs.

Note: Before installing DCPMM, refer to "Memory configuration" on page 120 and "Configure DC Persistent Memory Module (DCPMM)" on page 121 for the requirements.

App Direct mode with one processor

Table 17. Memory population order in App Direct mode with one processor

D: DRAM DIMM; 16 GB, 32 GB, or 64 GB RDIMM supported P: DC Persistent Memory Module (DCPMM)								
Configuration	**Processor 1**							
	8	7	6	5	4	3	2	1
1 DCPMM and 6 RDIMMs	D	D	D		**P**	D	D	D
2 DCPMMs and 6 RDIMMs	D	D	D	**P**	**P**	D	D	D

Table 18. Supported DCPMM capacity in App Direct mode with one processor

Total DCPMMs	Total DIMMs	Processor Family	128 GB DCPMM	256 GB DCPMM	512 GB DCPMM
1	6	L	√	√	√
		M	√	√	√
		Other	√	√	√
2	6	L	√	√	√
		M	√	√	√
		Other	√	√	

App Direct mode with two processors

Table 19. Memory population order in App Direct mode with two processors

D: DRAM DIMM; 16 GB, 32 GB, or 64 GB RDIMM supported

P: DC Persistent Memory Module (DCPMM)

Configuration	Processor 2								Processor 1							
	16	15	14	13	12	11	10	9	8	7	6	5	4	3	2	1
1 DCPMM and 12 RDIMMs	D	D	D			D	D	D	D	D	D		**P**	D	D	D
2 DCPMMs and 12 RDIMMs	D	D	D		**P**	D	D	D	D	D	D		**P**	D	D	D
4 DCPMMs and 12 RDIMMs	D	D	D	**P**	**P**	D	D	D	D	D	D	**P**	**P**	D	D	D

Table 20. Supported DCPMM capacity in App Direct mode with two processors

Total DCPMMs	Total DIMMs	Processor Family	128 GB DCPMM	256 GB DCPMM	512 GB DCPMM
1	12	L	√	√	√
		M	√	√	√
		Other	√	√	√
2	12	L	√	√	√
		M	√	√	√
		Other	√	√	√
4	12	L	√	√	√
		M	√	√	√
		Other	√	√	

Note: To install four 512 GB DCPMMs, ensure that the processor TDP is lower than or equal to 125 watts.

Mixed Memory Mode

In this mode, some percentage of DCPMM capacity is directly accessible to specific applications (App Direct), while the rest serves as system memory. The App Direct part of DCPMM is displayed as persistent memory, while the rest of DCPMM capacity is displayed as system memory. DRAM DIMMs act as cache in this mode.

Note: Before installing DC Persistent Memory Module (DCPMM), refer to "Memory configuration" on page 120 and "Configure DC Persistent Memory Module (DCPMM)" on page 121 for the requirements.

Mixed Memory Mode with one processor

Table 21. Memory population order in Mixed Memory Mode with one processor

D: DRAM DIMM; 16 GB or 32 GB RDIMM supported P: DC Persistent Memory Module (DCPMM)								
Configuration	**Processor 1**							
	8	7	6	5	4	3	2	1
2 DCPMMs and 6 RDIMMs	D	D	D	**P**	**P**	D	D	D

Table 22. Supported DCPMM capacity in Mixed Memory Mode with one processor

Total DCPMMs	Total DIMMs	Processor Family	128 GB DCPMM	256 GB DCPMM[1]	512 GB DCPMM[2]
2	**6**	**L**		√	√
		M		√	√
		Other		√	

Notes:
1. For 256 GB DCPMM, use 16 GB RDIMM.
2. For 512 GB DCPMM, use 16 GB or 32 GB RDIMM.

Mixed Memory Mode with two processors

Table 23. Memory population order in Mixed Memory Mode with two processors

D: DRAM DIMM; 16 GB or 32 GB RDIMM supported P: DC Persistent Memory Module (DCPMM)																
Configuration	**Processor 2**								**Processor 1**							
	16	15	14	13	12	11	10	9	8	7	6	5	4	3	2	1
4 DCPMMs and 12 RDIMMs	D	D	D	**P**	**P**	D	D	D	D	D	D	**P**	**P**	D	D	D

Table 24. Supported DCPMM capacity in Mixed Memory Mode with two processors

Total DCPMMs	Total DIMMs	Processor Family	128 GB DCPMM	256 GB DCPMM[1]	512 GB DCPMM[2]
4	**12**	**L**		√	√
		M		√	√
		Other		√	

Notes:
1. For 256 GB DCPMM, use 16 GB RDIMM.
2. For 512 GB DCPMM, use 16 GB or 32 GB RDIMM. To install four 512 GB DCPMMs, ensure that the processor TDP is lower than or equal to 125 watts.

Memory Mode

In this mode, DCPMMs act as volatile system memory, while DRAM DIMMs act as cache. Only DCPMM capacity is displayed as system memory in this mode. Ensure that the ratio of DRAM DIMM capacity to DCPMM capacity is between 1:2 and 1:16.

Note: Before installing DCPMM, refer to "Memory configuration" on page 120 and "Configure DC Persistent Memory Module (DCPMM)" on page 121 for the requirements.

Memory Mode with one processor

Table 25. Memory population order in Memory Mode with one processor

D: DRAM DIMM; 16 GB or 32 GB RDIMM supported

P: DC Persistent Memory Module (DCPMM)

Configuration	Processor 1							
	8	7	6	5	4	3	2	1
2 DCPMMs and 6 RDIMMs	D	D	D	**P**	**P**	D	D	D

Table 26. Supported DCPMM capacity in Memory Mode with one processor

Total DCPMMs	Total DIMMs	Processor Family	128 GB DCPMM	256 GB DCPMM[1]	512 GB DCPMM[2]
2	**6**	**L**		√	√
		M		√	√
		Other		√	

Notes:
1. For 256 GB DCPMM, use 16 GB RDIMM.
2. For 512 GB DCPMM, use 16 GB or 32 GB RDIMM.

Memory Mode with two processors

Table 27. Memory population order in Memory Mode with two processors

D: DRAM DIMM; 16 GB or 32 GB RDIMM supported

P: DC Persistent Memory Module (DCPMM)

Configuration	Processor 2								Processor 1							
	16	15	14	13	12	11	10	9	8	7	6	5	4	3	2	1
4 DCPMMs and 12 RDIMMs	D	D	D	**P**	**P**	D	D	D	D	D	D	**P**	**P**	D	D	D

Table 28. Supported DCPMM capacity in Memory Mode with two processors

Total DCPMMs	Total DIMMs	Processor Family	128 GB DCPMM	256 GB DCPMM[1]	512 GB DCPMM[2]
4	**12**	**L**		√	√
		M		√	√
		Other		√	

Notes:
1. For 256 GB DCPMM, use 16 GB RDIMM.

2. For 512 GB DCPMM, use 16 GB or 32 GB RDIMM. To install four 512 GB DCPMMs, ensure that the processor TDP is lower than or equal to 125 watts.

Install the 2.5-inch-drive backplane

Use this information to install the 2.5-inch-drive backplane. This topic applies only to server models that support 2.5-inch-drive backplanes.


"**Read** the installation Guidelines" on page 56

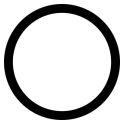
"**Power off** the server for this task" on page 113


"**ATTENTION: Static Sensitive Device** Ground package before opening" on page 58

Notes: Your server supports two types of 2.5-inch-drive backplanes: SATA/SAS 8-bay backplane (eight SATA/SAS drive bays) and AnyBay 8-bay backplane (four SATA/SAS drive bays and four NVMe drive bays). Depending on the backplane type and quantity, the installation location of the backplanes varies.

- One backplane

  Always install either the SATA/SAS backplane or the AnyBay backplane to drive bays 0–7.

- Two backplanes
  - Two SATA/SAS backplanes: install the two backplanes to drive bays 0–7 and drive bays 8–15
  - One SATA/SAS backplane and one AnyBay backplane: install the AnyBay backplane to drive bays 0–7; install the SATA/SAS backplane to drive bays 8–15

Before installing the 2.5-inch-drive backplane, touch the static-protective package that contains the new backplane to any unpainted surface on the outside of the server. Then, take the new backplane out of the package and place it on a static-protective surface.

To install the 2.5-inch-drive backplane, complete the following steps:

Watch the procedure

A video of this procedure is available at https://www.youtube.com/playlist?list=PLYV5R7hVcs-CWR-jaBNs-3tuilrybHfUJ.

Step 1. Determine the location of the backplanes to be installed.

Step 2. Connect the cables to the backplane.

Step 3. Insert the bottom of the backplane into the slots on the bottom of the chassis. Then, rotate the backplane to vertical position and align the holes in the backplane with the pins on the chassis and press the backplane into position. The release tabs will secure the backplane in place.

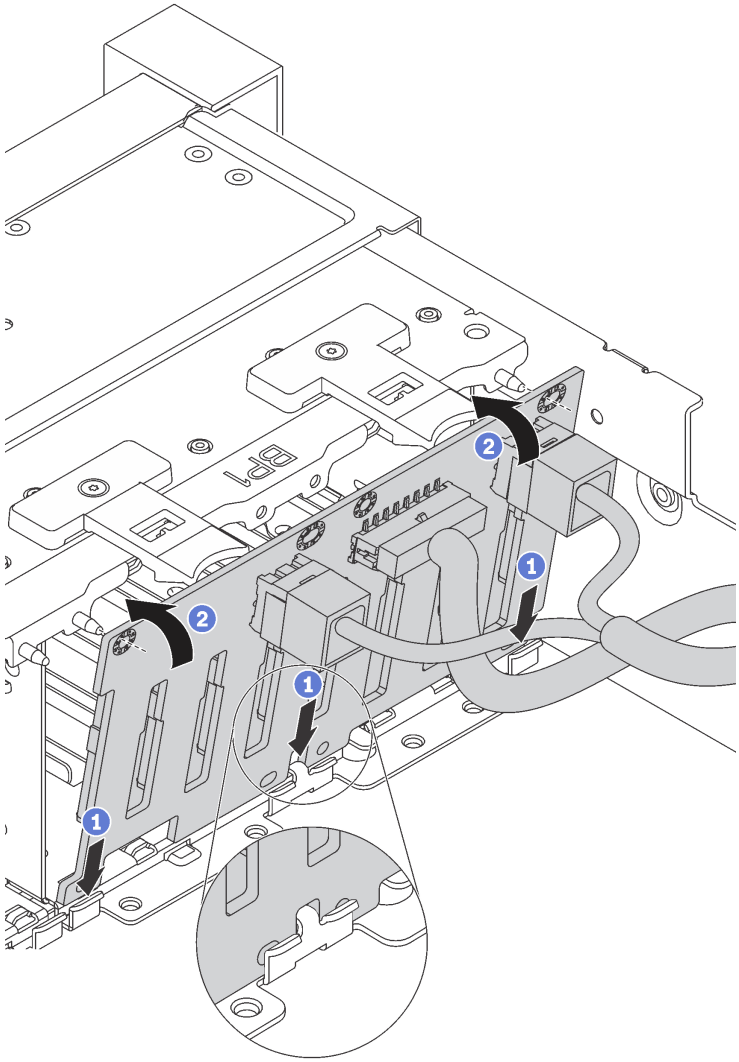

Figure 37. 2.5-inch-drive backplane installation

Step 4. Apply drive bay labels based on the type of the installed backplanes. Several drive bay labels come with each type of the supported drive backplane:

- **4–7**

  Apply this label to drive bays 4–7 if a SATA/SAS backplane is installed to drive bays 0–7.
- **4–7 (NVMe)**

  Apply this label to drive bays 4–7 if an AnyBay backplane is installed to drive bays 0–7.
- **12–15**

  Apply this label to drive bays 12–15 if a SATA/SAS backplane is installed to drive bays 8–15.

The following illustration shows the location for applying drive bay labels to server models with two SATA/SAS backplanes installed. The location is the same for applying drive bay labels to server models with an Anybay backplane and a SATA/SAS backplane installed. Ensure that the drive bay labels are stuck in the correct location. The labels help you to locate the correct drive during problem determination.

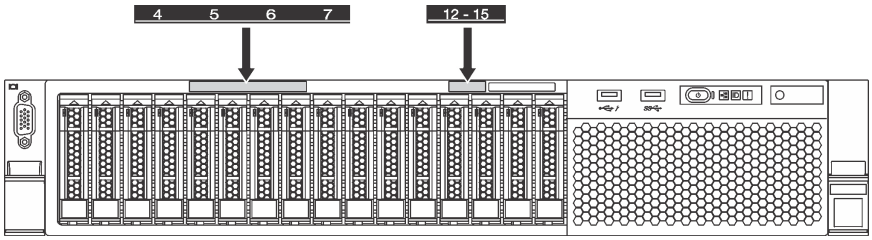

Figure 38. Drive bay labels for server models with two SATA/SAS backplanes installed

After installing the 2.5-inch-drive backplane, connect the cables to the system board. For information about the cable routing, see “Internal cable routing” on page 32.

Install the 3.5-inch-drive backplane

Use this information to install the 3.5-inch-drive backplane. This topic applies only to server models that support 3.5-inch-drive backplanes.


“**Read** the installation Guidelines” on page 56

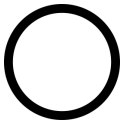
“**Power off** the server for this task” on page 113


“**ATTENTION: Static Sensitive Device** Ground package before opening” on page 58

Note: The procedure is based on the scenario that you want to install the backplane for up to twelve 3.5-inch drives. The procedure is similar for the backplane for up to eight 3.5-inch drives.

Before installing the 3.5-inch-drive backplane, touch the static-protective package that contains the new backplane to any unpainted surface on the outside of the server. Then, take the new backplane out of the package and place it on a static-protective surface.

To install the 3.5-inch-drive backplane, complete the following steps:

Watch the procedure

A video of this procedure is available at https://www.youtube.com/playlist?list=PLYV5R7hVcs-CWR-jaBNs-3tuilrybHfUJ.

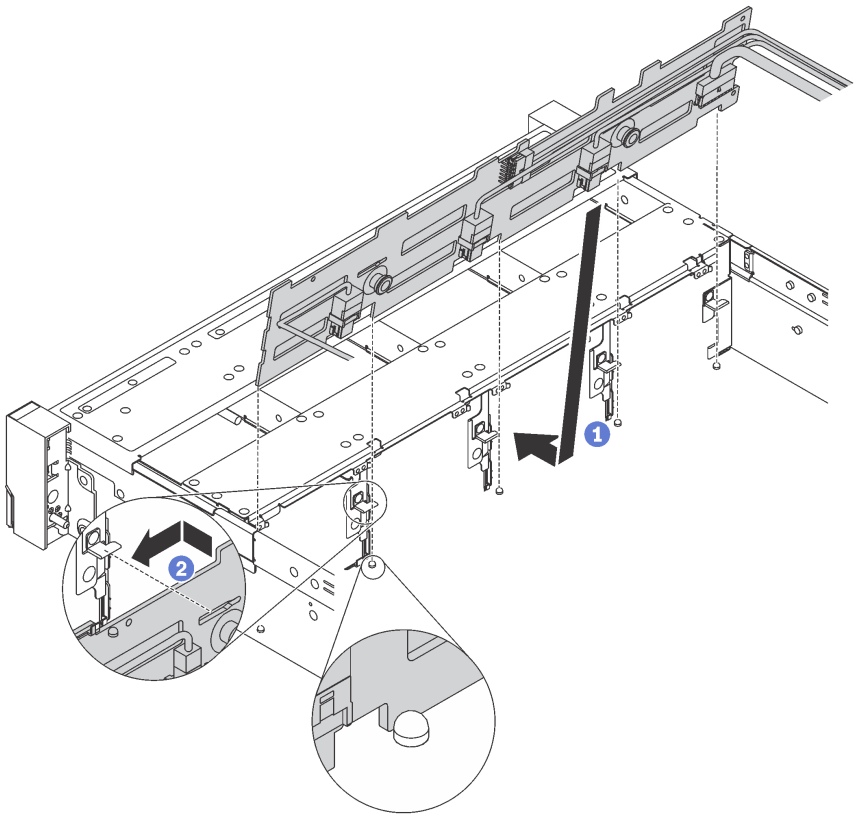

Figure 39. 3.5-inch-drive backplane installation

Step 1. Connect the cables to the backplane.

Step 2. Align the backplane with the chassis and lower it into the chassis. Then, put the backplane into place with it leaning backward slightly.

Step 3. Rotate the backplane to vertical position to ensure that the four hooks on the chassis pass through the corresponding holes in the backplane. Then, slide the new backplane as shown until it is secured into place.

Step 4. Apply the drive bay label based on the type of the installed backplane. The drive bay label comes with each type of the supported drive backplane:

- **0–7**

  Apply this label to the chassis if an 8-bay backplane is installed.
- **0–11**

  Apply this label to the chassis if a 12-bay backplane is installed.
- **0–11 (NVMe)**

  Apply this label to the chassis if an AnyBay 12-bay backplane is installed.

  Note: NVMe drives are supported in drive bays 8–11.

The following illustration shows the location for applying the drive bay label to the server models with a 12-bay backplane installed. The location is the same for applying the drive bay label to server models with an 8-bay backplane or an AnyBay 12-bay backplane installed. Ensure that the drive bay label is stuck in the correct location. The label helps you to locate the correct drive during problem determination.

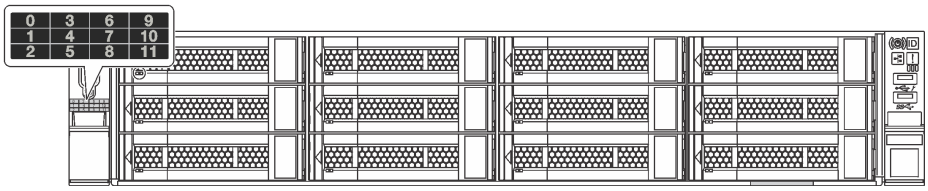

Figure 40. Drive bay label for server models with a 12-bay backplane installed

After installing the 3.5-inch-drive backplane, connect the cables to the system board. For information about the cable routing, see "Internal cable routing" on page 32.

Install the rear hot-swap drive assembly

Use this information to install the rear hot-swap drive assembly. This topic applies only to server models that support the rear hot-swap drive assembly.


"**Read** the installation Guidelines" on page 56

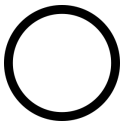
"**Power off** the server for this task" on page 113


"**ATTENTION: Static Sensitive Device** Ground package before opening" on page 58

Before installing the rear hot-swap drive assembly, touch the static-protective package that contains the new rear hot-swap drive assembly to any unpainted surface on the outside of the server. Then, take the new rear hot-swap drive assembly out of the package and place it on a static-protective surface.

To install the rear hot-swap drive assembly, complete the following steps:

Watch the procedure

A video of this procedure is available at https://www.youtube.com/playlist?list=PLYV5R7hVcs-CWR-jaBNs-3tuilrybHfUJ.

Step 1. Align the mounting stud on the system board with the corresponding hole in the rear hot-swap drive assembly. Meanwhile, align the rear of the rear hot-swap drive assembly with the corresponding rail guides in the rear of the chassis. Then, carefully press the rear hot-swap drive assembly straight down into the chassis until it is fully seated.

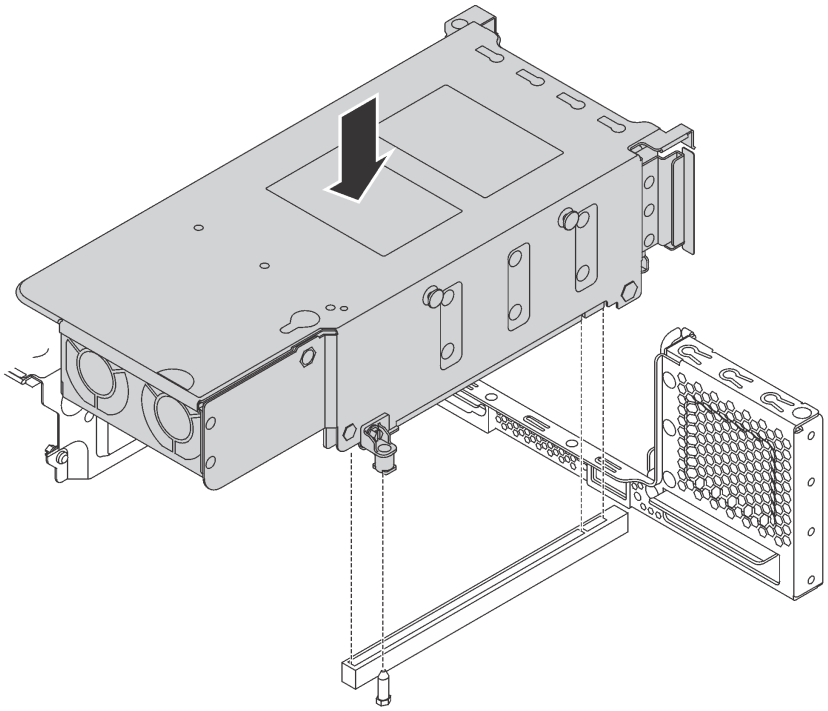

Figure 41. Rear hot-swap drive assembly installation

Step 2. Connect the signal cable of the rear hot-swap drive assembly to the RAID adapter.

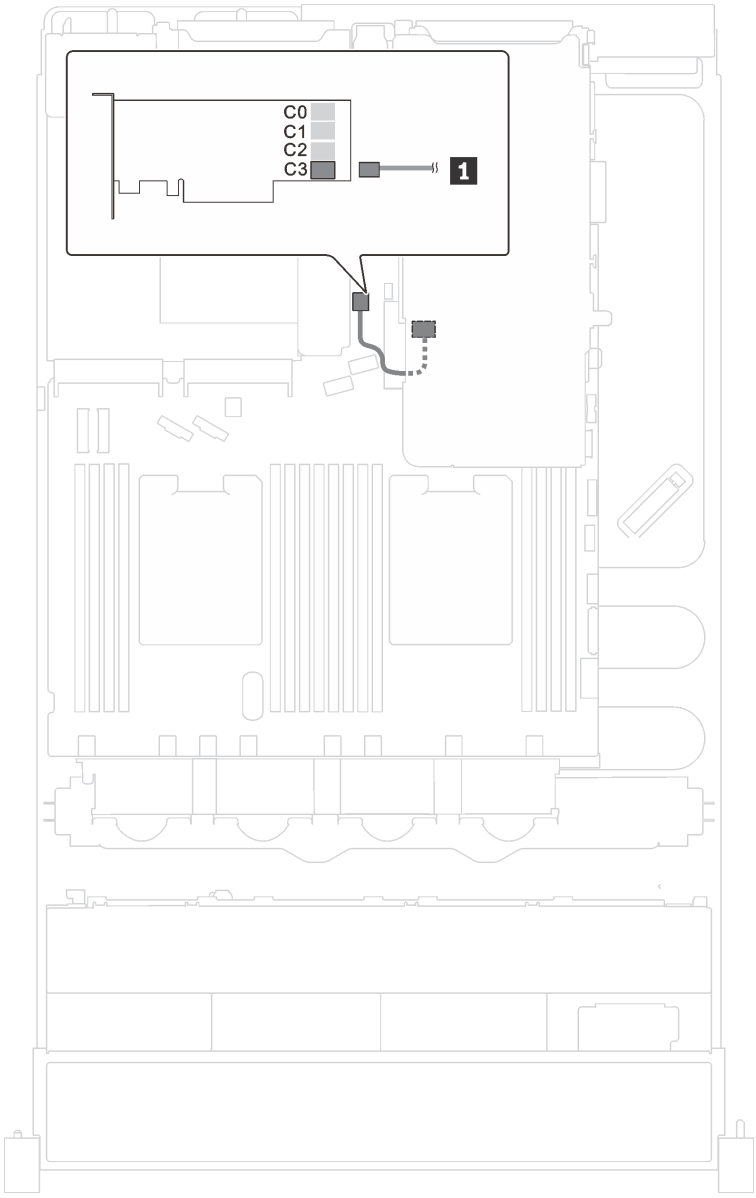

Figure 42. Cable routing for the rear hot-swap drive assembly

After installing the rear hot-swap drive assembly, you can install hot-swap drives to the assembly. See "Install a hot-swap drive" on page 108.

Install the M.2 backplane and M.2 drive

Use this information to install the M.2 backplane and M.2 drive.

	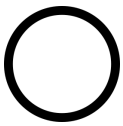	
"**Read** the installation Guidelines" on page 56	"**Power off** the server for this task" on page 113	"**ATTENTION: Static Sensitive Device** Ground package before opening" on page 58

Before installing the M.2 backplane and M.2 drive:

1. Touch the static-protective package that contains the new M.2 backplane and M.2 drive to any unpainted surface on the outside of the server. Then, take the new M.2 backplane and M.2 drive out of the package and place them on a static-protective surface.
2. Adjust the retainer on the M.2 backplane to accommodate the particular size of the M.2 drive you wish to install. See “Adjust the retainer on the M.2 backplane” on page 88.
3. Locate the connector on each side of the M.2 backplane.

   Notes:

   - Some M.2 backplanes support two identical M.2 drives. When two M.2 drives are installed, align and support both M.2 drives when sliding the retainer forward to secure the M.2 drives.
   - Install the M.2 drive in slot 0 first.

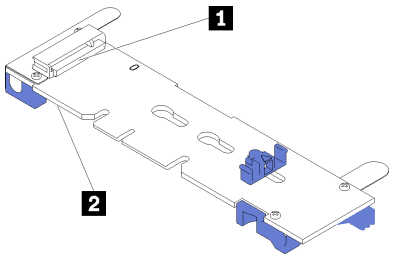

1 Slot 0
2 Slot 1

Figure 43. M.2 drive slot

To install the M.2 backplane and M.2 drive, complete the following steps:

Watch the procedure

A video of this procedure is available at https://www.youtube.com/playlist?list=PLYV5R7hVcs-CWR-jaBNs-3tuilrybHfUJ.

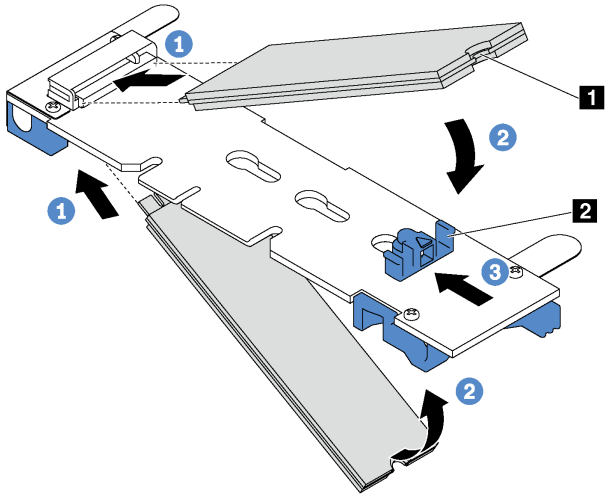

Figure 44. M.2 drive installation

Step 1. Insert the M.2 drive at an angle of approximately 30 degrees into the connector.

Note: If your M.2 backplane supports two M.2 drives, insert the M.2 drives into the connectors at both sides.

Step 2. Rotate the M.2 drive down until the notch 1 catches on the lip of the retainer 2.

Step 3. Slide the retainer forward (toward the connector) to secure the M.2 drive into place.

Attention: When sliding the retainer forward, ensure that the two nubs 3 on the retainer enter the small holes 4 on the M.2 backplane. Once they enter the holes, you will hear a soft “click” sound.

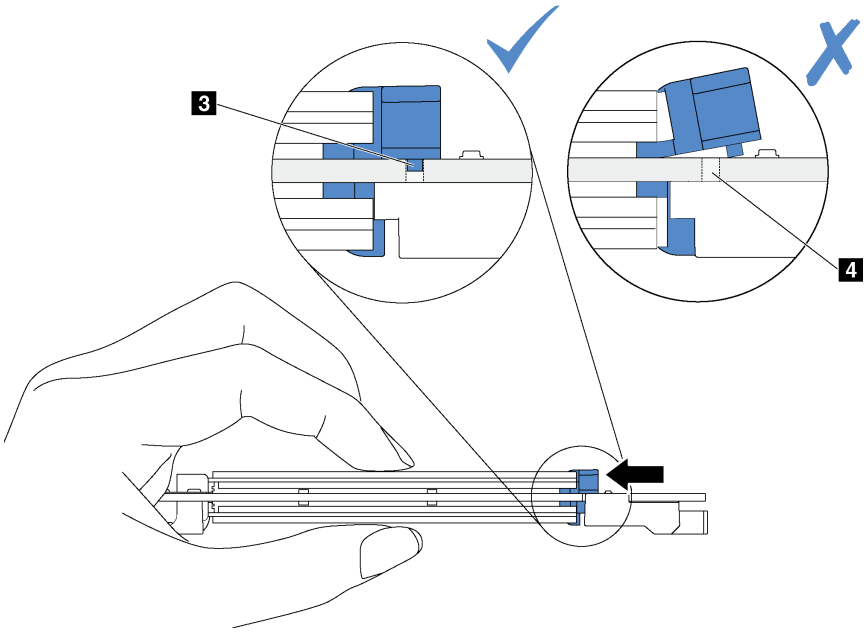

Figure 45. Instruction for sliding the retainer

Step 4. Align the blue plastic supports at each end of the M.2 backplane with the guide pins on the system board. Then, insert the M.2 backplane into the M.2 slot on the system board and press it down to fully seat it.

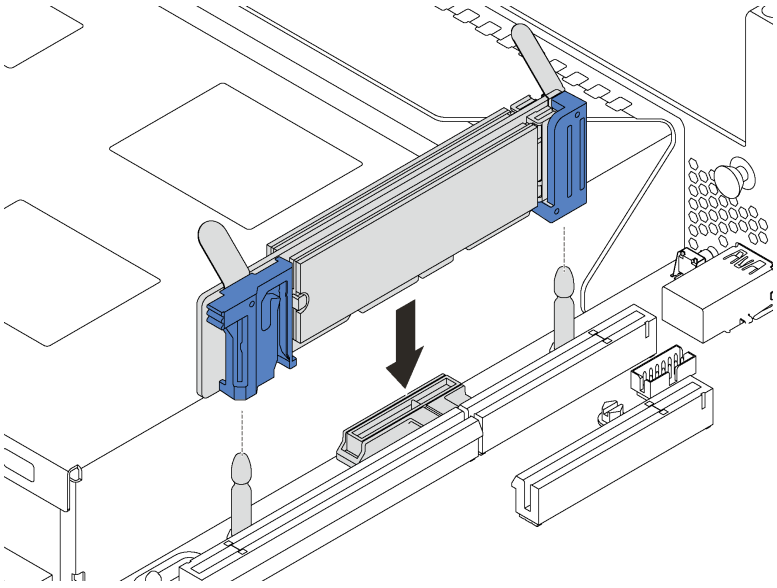

Figure 46. M.2 backplane installation

For server models with twelve 3.5-inch hot-swap drives, if you are installing the 480 GB M.2 drive, install the M.2 drive air baffle for proper airflow.

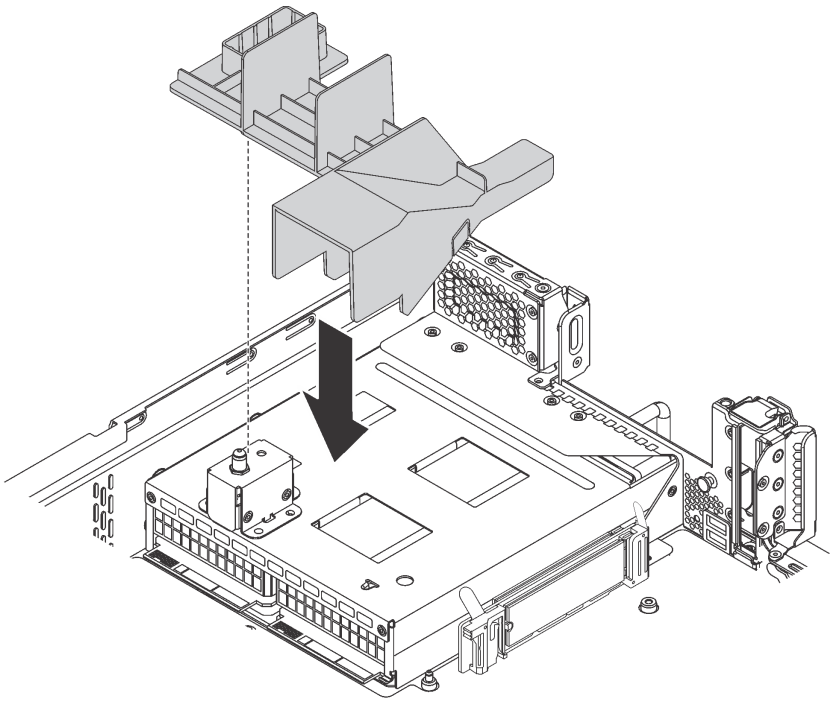

Figure 47. M.2 drive air baffle installation

Adjust the retainer on the M.2 backplane

Use this information to adjust the retainer on the M.2 backplane.

	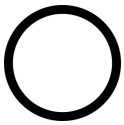	
“**Read** the installation Guidelines” on page 56	“**Power off** the server for this task” on page 113	“**ATTENTION: Static Sensitive Device** Ground package before opening” on page 58

Before adjusting the retainer on the M.2 backplane, locate the correct keyhole that the retainer should be installed into to accommodate the particular size of the M.2 drive you wish to install.

To adjust the retainer on the M.2 backplane, complete the following steps:

Watch the procedure

A video of this procedure is available at https://www.youtube.com/playlist?list=PLYV5R7hVcs-CWR-jaBNs-3tuilrybHfUJ.

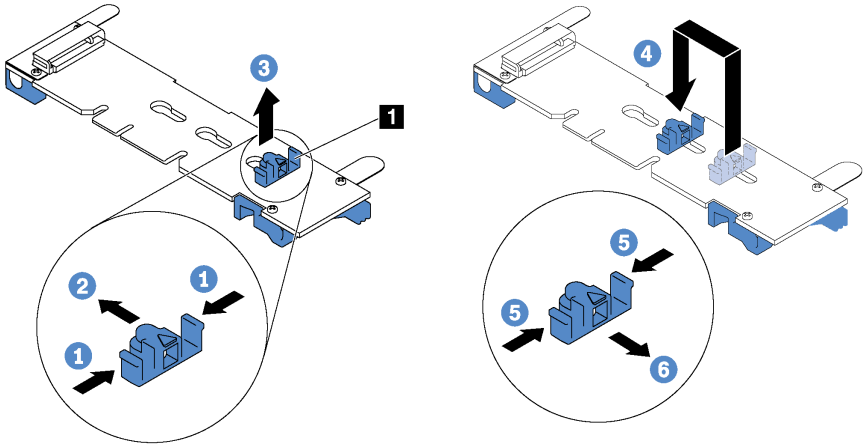

Figure 48. M.2 retainer adjustment

Step 1. Press both sides of the retainer 1.
Step 2. Move the retainer forward until it is in the large opening of the keyhole.
Step 3. Take the retainer out of the keyhole.
Step 4. Insert the retainer into the correct keyhole.
Step 5. Press both sides of the retainer.
Step 6. Slide the retainer backwards until it is seated in place.

Install a PCIe adapter

Use this information to install a PCIe adapter on the riser assembly or on the system board.

This topic contains the following information:

- "Install a PCIe adapter on the riser assembly" on page 89
- "Install a PCIe adapter on the system board" on page 94

To identify the PCIe slots of your servers, see "Rear view" on page 24.

Notes:

- Your server supports PCIe slot 5 when two processors are installed.
- PCIe slot 6 does not support PCIe adapters with external mini-SAS HD connectors.
- Use only PCIe adapters provided by Lenovo. Lenovo makes no warranty regarding non-Lenovo products or services. For a list of supported PCIe adapters, see: https://static.lenovo.com/us/en/serverproven/index.shtml.
- Follow below PCIe slot selection priority when installing an Ethernet adapter or a converged network adapter:

Number of installed processors	PCIe slot selection priority
One processor	4, 2, 6, 3, 1
Two processors	4, 2, 6, 3, 5, 1

Install a PCIe adapter on the riser assembly

Use the following information to install a PCIe adapter on the riser assembly.



"**Read** the installation Guidelines" on page 56

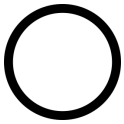

"**Power off** the server for this task" on page 113



"**ATTENTION: Static Sensitive Device** Ground package before opening" on page 58

Notes:

- Depending on the specific type, your PCIe adapter might look different from the illustration in this topic.
- Use any documentation that comes with the PCIe adapter and follow those instructions in addition to the instructions in this topic.

Before installing a PCIe adapter on the riser assembly:

1. Touch the static-protective package that contains the new PCIe adapter to any unpainted surface on the outside of the server. Then, take the new PCIe adapter out of the package and place it on a static-protective surface.
2. Locate an appropriate PCIe slot. See "Rear view" on page 24 to identify the PCIe slots of your server.

To install a PCIe adapter on the riser assembly, complete the following steps:

Watch the procedure

A video of this procedure is available at https://www.youtube.com/playlist?list=PLYV5R7hVcs-CWR-jaBNs-3tuilrybHfUJ.

Step 1. Align the PCIe adapter with the PCIe slot on the riser card. Then, carefully press the PCIe adapter straight into the slot until it is securely seated and its bracket also is secured.

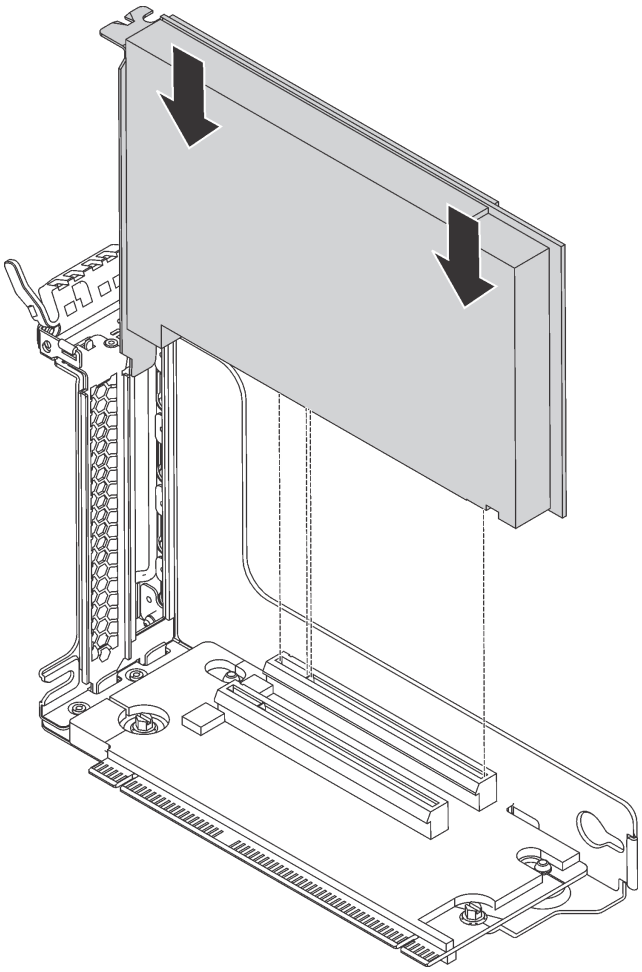

Figure 49. PCIe adapter installation

Note: Carefully handle the PCIe adapter by its edges.

Step 2. Pivot the PCIe adapter retention latch to the closed position.

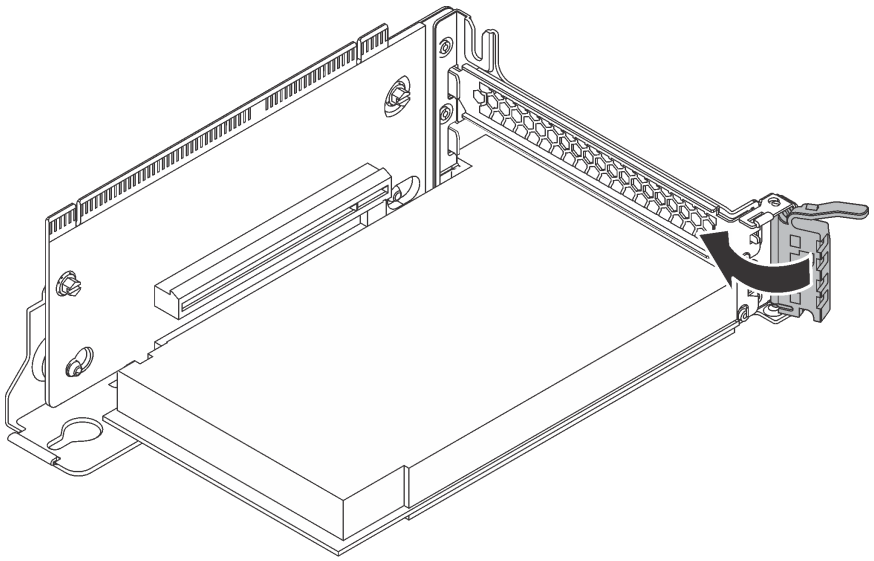

Figure 50. Closing the PCIe adapter retention latch

After installing the PCIe adapter on the riser assembly:

1. Connect cables to the PCIe adapter. See "Internal cable routing" on page 32.
2. Install the riser assembly to the chassis by doing the following:

- To install the riser 1 assembly, align the mounting stud on the system board with the corresponding hole in the riser bracket. Meanwhile, align the rear of the riser 1 assembly with the corresponding rail guides in the rear of the chassis. Then, carefully press the riser 1 assembly straight down into the chassis until it is fully seated.

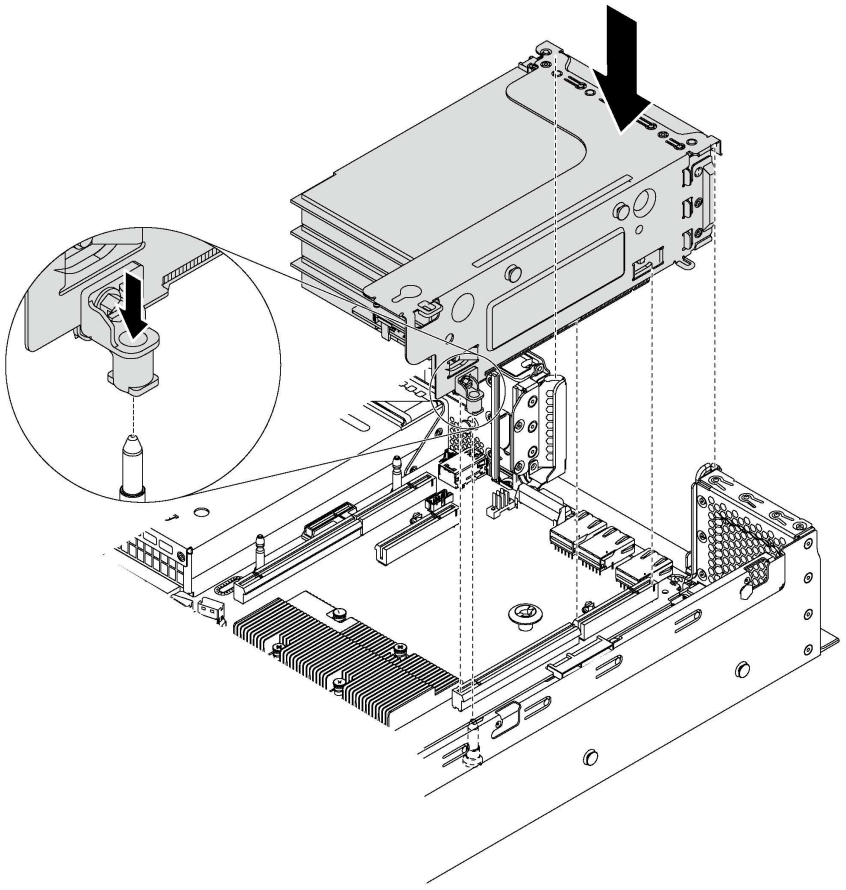

Figure 51. Riser 1 assembly installation

- To install the riser 2 assembly, align the rear of the riser 2 assembly with the corresponding rail guides in the rear of the chassis. Then, carefully press the riser 2 assembly straight down into the chassis until it is fully seated.

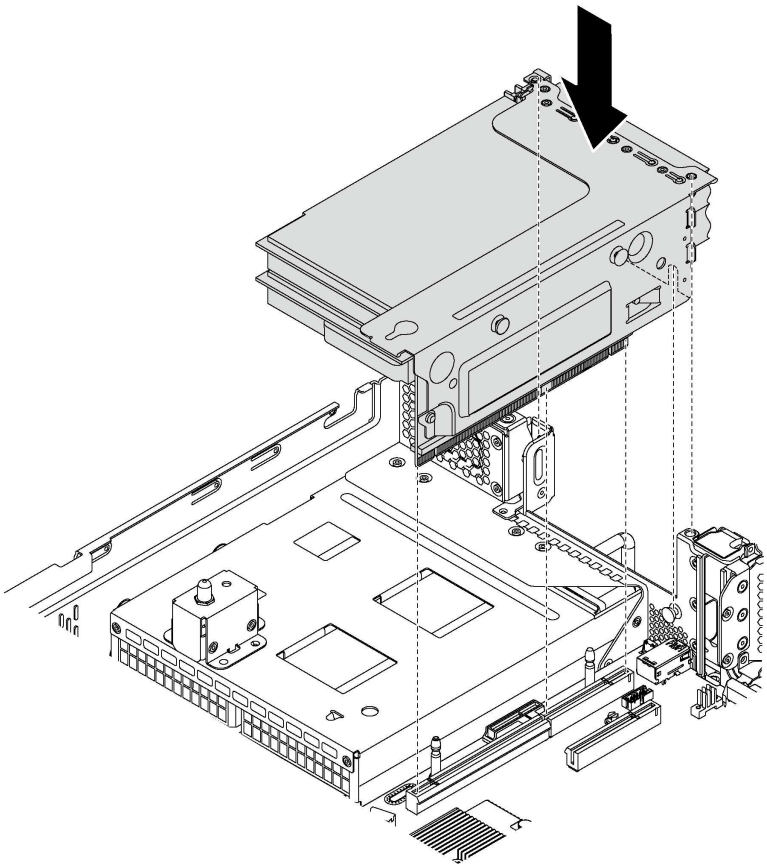

Figure 52. Riser 2 assembly installation

Install a PCIe adapter on the system board

Use this information to install a PCIe adapter on the system board.



"**Read** the installation Guidelines" on page 56

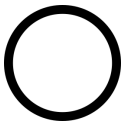

"**Power off** the server for this task" on page 113



"**ATTENTION: Static Sensitive Device** Ground package before opening" on page 58

Notes:

- Depending on the specific type, your PCIe adapter might look different from the illustration in this topic.
- Use any documentation that comes with the PCIe adapter and follow those instructions in addition to the instructions in this topic.

Before installing the PCIe adapter on the system board:

1. Touch the static-protective package that contains the new PCIe adapter to any unpainted surface on the outside of the server. Then, take the new PCIe adapter out of the package and place it on a static-protective surface.

2. If the new PCIe adapter is installed with a full-height bracket, replace the full-height bracket with the low-profile bracket by doing the following:
   a. Carefully remove the screws that secure the PCIe adapter and then remove the full-height bracket from the PCIe adapter.
   b. Note the orientation and align the screw holes in the low-profile bracket with the corresponding holes in the PCIe adapter. Then, install the screws to secure the bracket to the PCIe adapter.

To install a PCIe adapter on the system board, complete the following steps:

Watch the procedure

A video of this procedure is available at https://www.youtube.com/playlist?list=PLYV5R7hVcs-CWR-jaBNs-3tuilrybHfUJ.

Step 1. Align the PCIe adapter with the PCIe slot. Then, carefully press the PCIe adapter straight into the slot until it is securely seated and its bracket also is secured by the chassis.

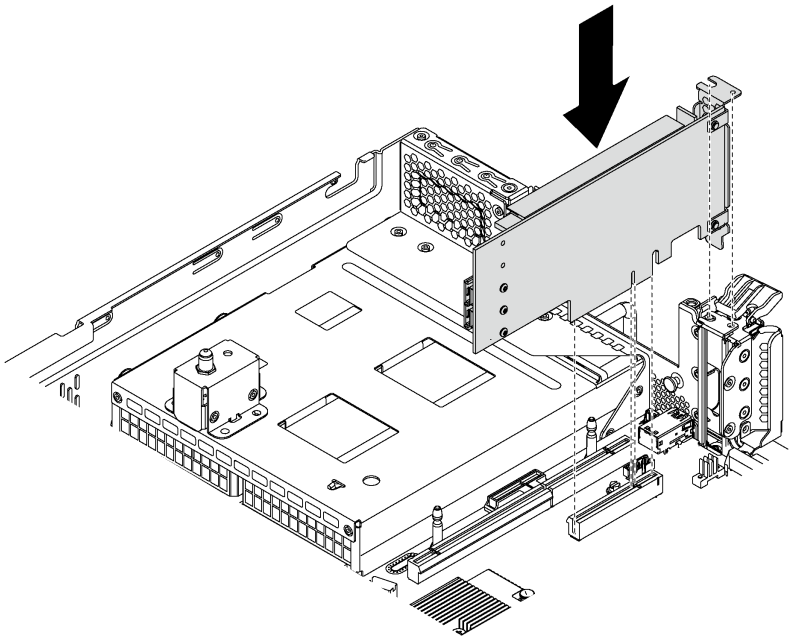

Figure 53. Installing a PCIe adapter on the system board

Step 2. Pivot the PCIe adapter retention latch to the closed position to secure the PCIe adapter in position.

After installing the PCIe adapter on the system board, connect cables to the PCIe adapter.

Install the LOM adapter

Use this information to install the LOM adapter.



"**Read** the installation Guidelines" on page 56

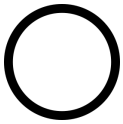

"**Power off** the server for this task" on page 113



"**ATTENTION: Static Sensitive Device** Ground package before opening" on page 58

Before installing the LOM adapter:

1. If the server comes with a LOM adapter slot bracket, remove it with a tool first. Store the bracket in case that you later remove the LOM adapter and need the bracket to cover the place.

   CAUTION:
   Use a tool to remove the LOM adapter slot bracket to avoid injury.
2. Lift the LOM-adapter air baffle out of the chassis.
3. Touch the static-protective package that contains the new LOM adapter to any unpainted surface on the outside of the server. Then, take the new LOM adapter out of the package and place it on a static-protective surface.

To install the LOM adapter, complete the following steps:

Watch the procedure

A video of this procedure is available at https://www.youtube.com/playlist?list=PLYV5R7hVcs-CWR-jaBNs-3tuilrybHfUJ.

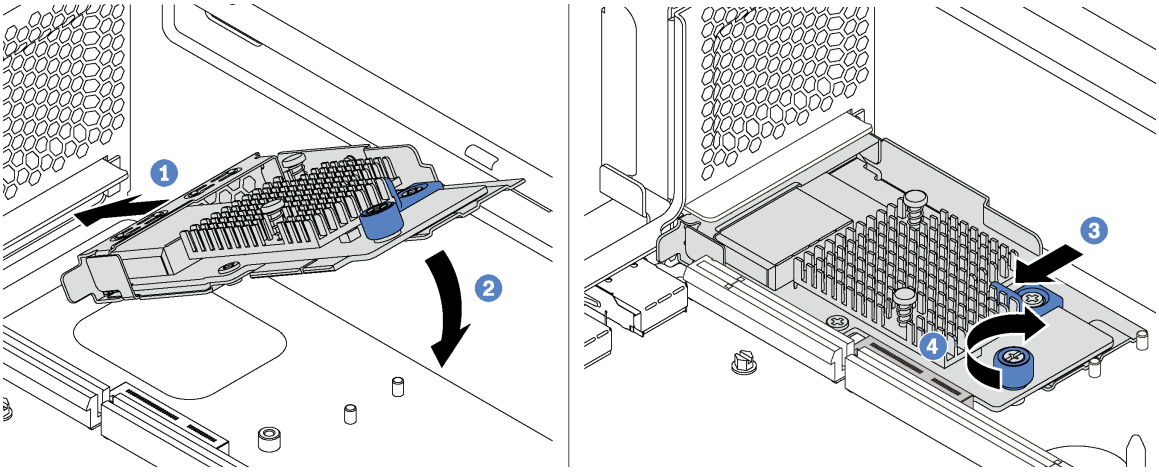

Figure 54. LOM adapter installation

Step 1. Place the LOM adapter into the connector at an angle.

Step 2. Rotate the LOM adapter down.

Step 3. Push the LOM adapter as shown to insert it into the connector on the system board.

Step 4. Tighten the thumbscrew to secure the LOM adapter.

Install the serial port module

Use this information to install the serial port module.


"**Read** the installation Guidelines" on page 56

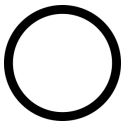
"**Power off** the server for this task" on page 113


"**ATTENTION: Static Sensitive Device** Ground package before opening" on page 58

Before installing the serial port module:

1. If the slot is covered with a slot bracket, open the retention latch and remove the slot bracket from the chassis. Store the bracket in case that you later remove the serial port module and need the bracket to cover the place.

2. Touch the static-protective package that contains the new serial port module to any unpainted surface on the outside of the server. Then, take the new serial port module out of the package and place it on a static-protective surface.

To install the serial port module, complete the following steps:

Watch the procedure

A video of this procedure is available at https://www.youtube.com/playlist?list=PLYV5R7hVcs-CWR-jaBNs-3tuilrybHfUJ.

Step 1. Install the serial port module into the chassis and close the retention latch to secure it in position.

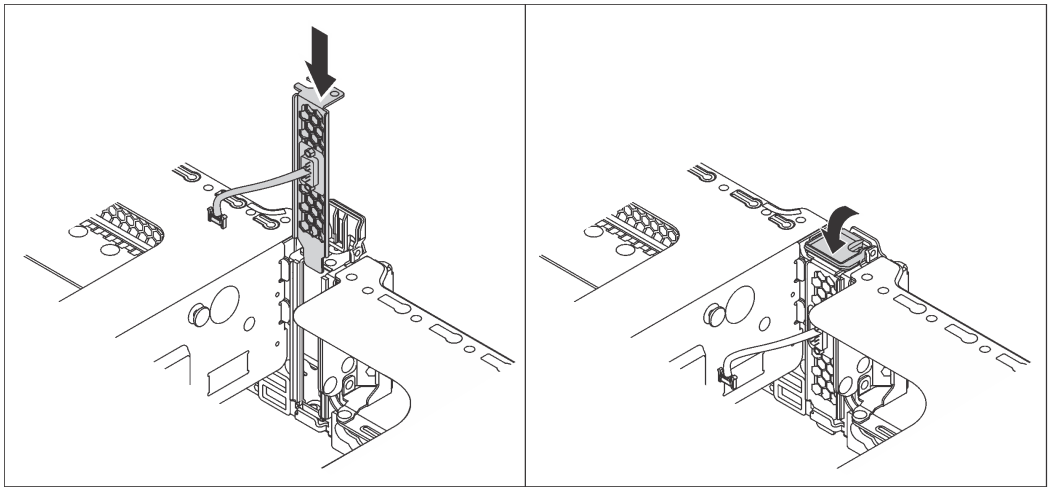

Figure 55. Serial port module installation

Step 2. Connect the cable of the serial port module to the serial-port-module connector on the system board. For the location of the serial-port-module connector, refer to "System board components" on page 29.

After installing the serial port module, do one of the following to enable it according to the installed operating system:

- For Linux operating system:

  Open the ipmitool and enter the following command to disable the Serial over LAN (SOL) feature:

  ```
  -I lanplus -H IP -U USERID -P PASSWORD sol deactivate
  ```

- For Microsoft Windows operating system:
  1. Open the ipmitool and enter the following command to disable the SOL feature:

     ```
     -I lanplus -H IP -U USERID -P PASSWORD sol deactivate
     ```

  2. Open Windows PowerShell and enter the following command to disable the Emergency Management Services (EMS) feature:

     ```
     Bcdedit /ems no
     ```

  3. Restart the server to ensure that the EMS setting takes effect.

Install the system fan cage

Use this information to install the system fan cage.

“**Read** the installation Guidelines” on page 56

“**Power off** the server for this task” on page 113

“**ATTENTION: Static Sensitive Device** Ground package before opening” on page 58

Before installing a system fan cage, touch the static-protective package that contains the new system fan cage to any unpainted surface on the outside of the server. Then, take the new system fan cage out of the package and place it on a static-protective surface.

To install the system fan cage, complete the following step:

Watch the procedure

A video of this procedure is available at https://www.youtube.com/playlist?list=PLYV5R7hVcs-CWR-jaBNs-3tuilrybHfUJ.

Step 1. Align both sides of the system fan cage with the corresponding mounting brackets in the chassis. Then, press the system fan cage straight down into the chassis. Ensure that the system fan cage is engaged with the mounting brackets at both sides.

Note: If there are system fans installed in the system fan cage, ensure that the system fans are correctly connected to the system fan connectors on the system board.

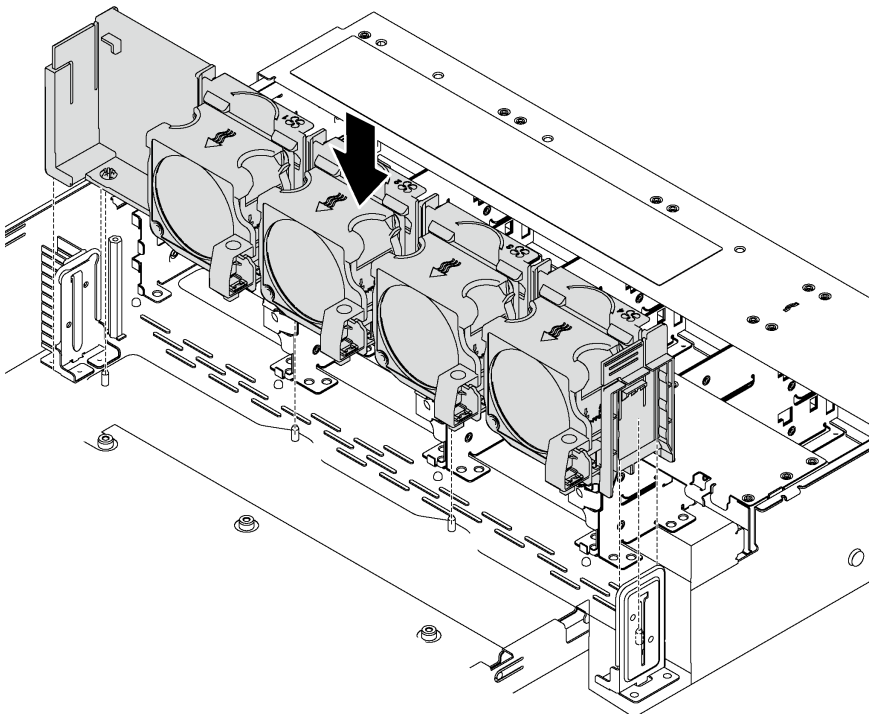

Figure 56. System fan cage installation

Install a system fan

Use this information to install a system fan.

	“**Read** the installation Guidelines” on page 56	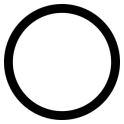 “**Power off** the server for this task” on page 113	 “**ATTENTION: Static Sensitive Device** Ground package before opening” on page 58

S033



CAUTION:
Hazardous energy present. Voltages with hazardous energy might cause heating when shorted with metal, which might result in spattered metal, burns, or both.

S017



CAUTION:
Hazardous moving fan blades nearby. Keep fingers and other body parts away.

To install a system fan, complete the following steps:

Watch the procedure

A video of this procedure is available at https://www.youtube.com/playlist?list=PLYV5R7hVcs-CWR-jaBNs-3tuilrybHfUJ.

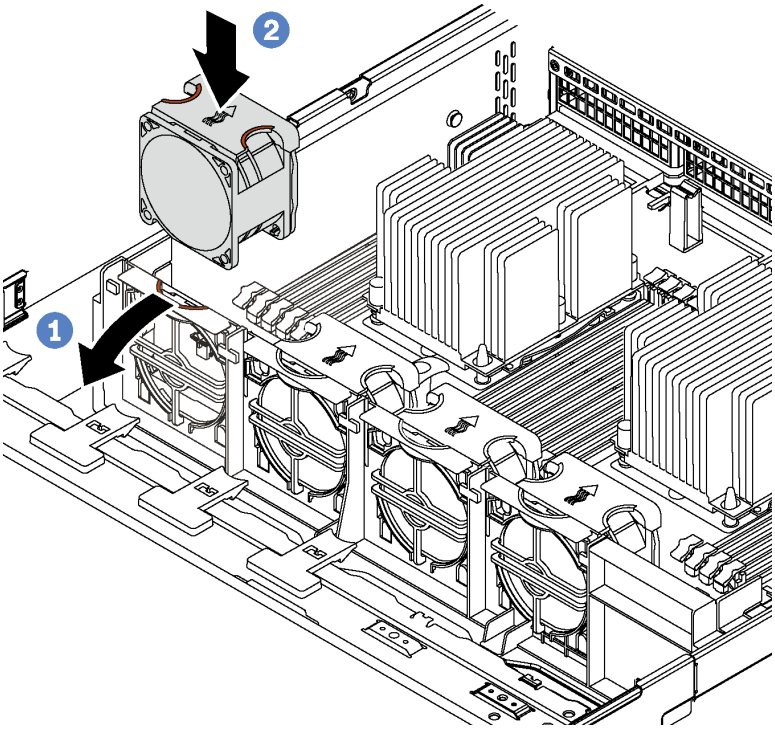

Figure 57. System fan installation

Step 1. Press the fan cage bracket to the front of the server.

Step 2. Position the system fan so that the airflow arrow on the fan points toward the rear of the server. Insert the fan into the bracket and push on top of the fan to make sure that the fan is fully seated.

Note: The correct airflow is from the front to the rear of the server.

Install a hot-swap power supply

Use this information to install a hot-swap power supply.

"**Read** the installation Guidelines" on page 56

"**ATTENTION: Static Sensitive Device** Ground package before opening" on page 58

The following tips describe the type of power supply that the server supports and other information that you must consider when you install a power supply:

- The standard shipping has only one power supply installed in the server. For redundancy and hot-swap support, you must install an additional hot-swap power supply. Certain customized models might be shipped with two power supplies installed.
- Ensure that the devices that you are installing are supported. For a list of supported optional devices for the server, go to: https://static.lenovo.com/us/en/serverproven/index.shtml

Notes:

- Ensure that the two power supplies installed on the server have the same wattage.

- If you are replacing the existing power supply with a new power supply of different wattage, attach the power information label that comes with this option onto the existing label near the power supply.



Figure 58. Hot-swap power supply label on the cover

S035

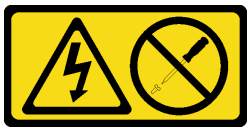

CAUTION:
Never remove the cover on a power supply or any part that has this label attached. Hazardous voltage, current, and energy levels are present inside any component that has this label attached. There are no serviceable parts inside these components. If you suspect a problem with one of these parts, contact a service technician.

S002



CAUTION:
The power-control button on the device and the power switch on the power supply do not turn off the electrical current supplied to the device. The device also might have more than one power cord. To remove all electrical current from the device, ensure that all power cords are disconnected from the power source.

S001



DANGER

Electrical current from power, telephone, and communication cables is hazardous.
To avoid a shock hazard:

- **Connect all power cords to a properly wired and grounded electrical outlet/source.**
- **Connect any equipment that will be attached to this product to properly wired outlets/sources.**
- **When possible, use one hand only to connect or disconnect signal cables.**
- **Never turn on any equipment when there is evidence of fire, water, or structural damage.**
- **The device might have more than one power cord, to remove all electrical current from the device, ensure that all power cords are disconnected from the power source.**

The following tips describe the information that you must consider when you install a power supply with dc input.

CAUTION:
240 V dc input (input range: 180-300 V dc) is supported in Chinese Mainland ONLY. Power supply with 240 V dc input cannot support hot plugging power cord function. Before removing the power supply with dc input, please turn off server or disconnect dc power sources at the breaker panel or by turning off the power source. Then, remove the power cord.



在直流输入状态下，若电源供应器插座不支持热插拔功能，请务必不要对设备电源线进行热插拔。此操作可能导致设备损坏及数据丢失。因错误执行热插拔导致的设备故障或损坏，不属于保修范围。

NEVER CONNECT AND DISCONNECT THE POWER SUPPLY CABLE AND EQUIPMENT WHILE YOUR EQUIPMENT IS POWERED ON WITH DC SUPPLY (hot-plugging). Otherwise you may damage the equipment and result in data loss, the damages and losses result from incorrect operation of the equipment will not be covered by the manufacturers' warranty.

S035

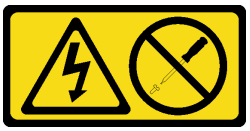

CAUTION:
Never remove the cover on a power supply or any part that has this label attached. Hazardous voltage, current, and energy levels are present inside any component that has this label attached. There are no serviceable parts inside these components. If you suspect a problem with one of these parts, contact a service technician.

S019

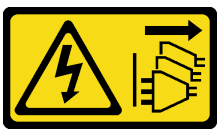

CAUTION:
The power-control button on the device does not turn off the electrical current supplied to the device. The device also might have more than one connection to dc power. To remove all electrical current from the device, ensure that all connections to dc power are disconnected at the dc power input terminals.

Before installing a hot-swap power supply, touch the static-protective package that contains the new hot-swap power supply to any unpainted surface on the outside of the server. Then, take the new hot-swap power supply out of the package and place it on a static-protective surface.

To install a hot-swap power supply, complete the following steps:

Watch the procedure

A video of this procedure is available at https://www.youtube.com/playlist?list=PLYV5R7hVcs-CWR-jaBNs-3tuilrybHfUJ.

Step 1. If there is a power-supply filler installed, remove it.

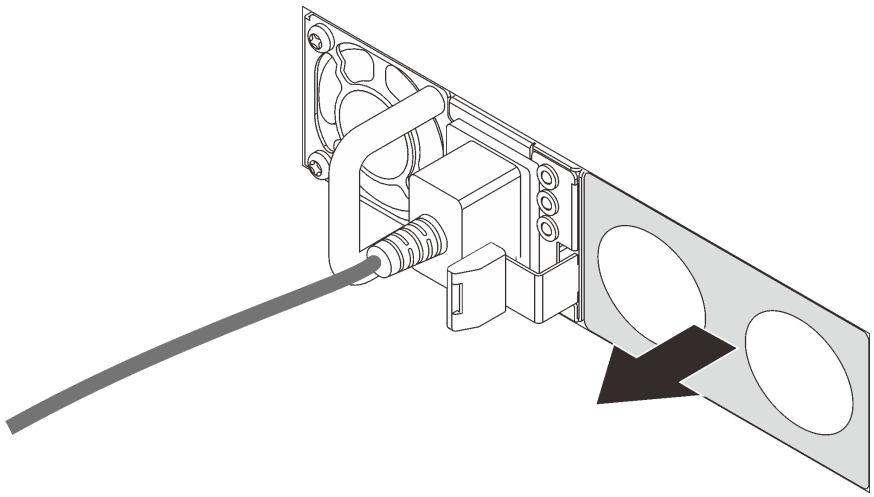

Figure 59. Hot-swap power supply filler removal

Step 2. Slide the new hot-swap power supply into the bay until it snaps into position.

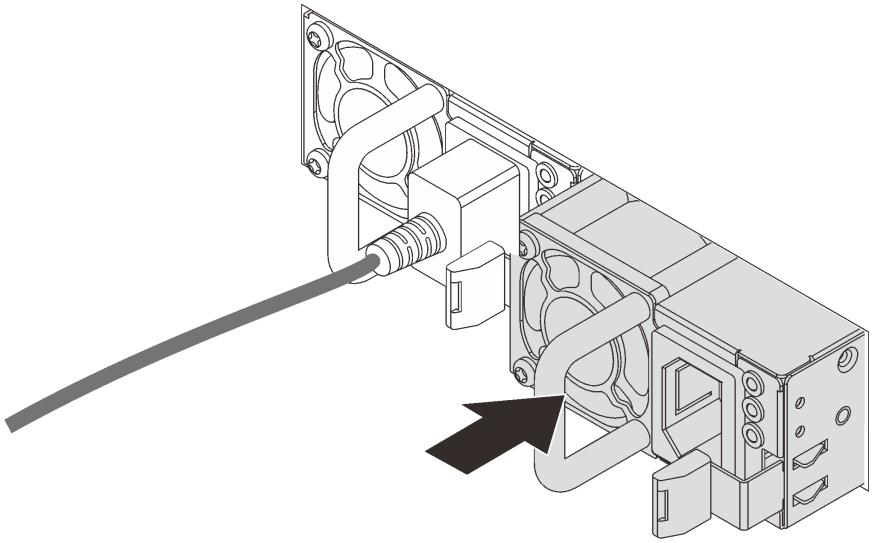

Figure 60. Hot-swap power supply installation

Install the air baffle

Use this information to install the air baffle.



"**Read** the installation Guidelines" on page 56

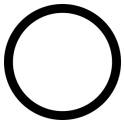

"**Power off** the server for this task" on page 113



"**ATTENTION: Static Sensitive Device** Ground package before opening" on page 58

S033



CAUTION:
Hazardous energy present. Voltages with hazardous energy might cause heating when shorted with metal, which might result in spattered metal, burns, or both.

S017



CAUTION:
Hazardous moving fan blades nearby. Keep fingers and other body parts away.

Before installing the air baffle:

1. Ensure that no tools or loose screws are left inside your server.
2. Ensure that all components have been reassembled correctly.
3. Ensure that all cables inside the server have been properly routed and they will not interfere with installing the air baffle.

To install the air baffle, complete the following steps:

Watch the procedure

A video of this procedure is available at https://www.youtube.com/playlist?list=PLYV5R7hVcs-CWR-jaBNs-3tuilrybHfUJ.

Note: Ensure that the retaining clips on each end of the DIMM connectors are closed.

Step 1. Align the air baffle tabs with the slots on both sides of the chassis. Then, lower the air baffle into the server and press the air baffle down until it is securely seated.

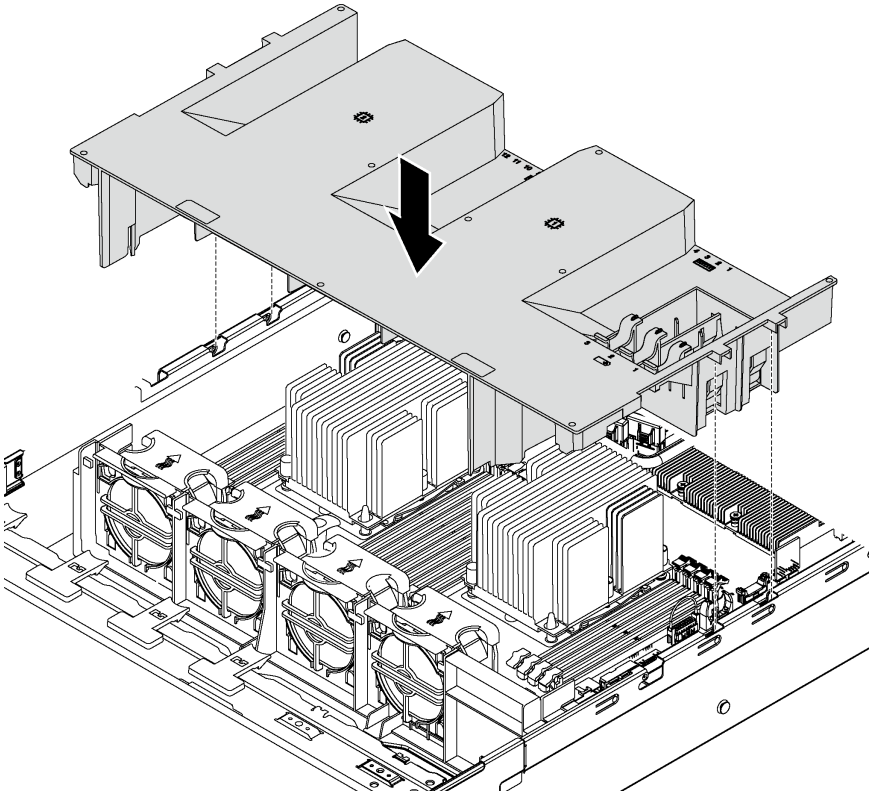

Figure 61. Air baffle installation

Step 2. Install any RAID super capacitor module that you have removed.

After installing the air baffle, install any RAID super capacitor modules that you removed.

Install the RAID super capacitor module

Use this information to install the RAID super capacitor module.

“**Read** the installation Guidelines” on page 56

“**Power off** the server for this task” on page 113

“**ATTENTION: Static Sensitive Device** Ground package before opening” on page 58

Before installing a RAID super capacitor module:

1. Touch the static-protective package that contains the new RAID super capacitor module to any unpainted surface on the outside of the server. Then, take the new RAID super capacitor module out of the package and place it on a static-protective surface.
2. Locate the holder for the RAID super capacitor module on the air baffle and note the orientation of the RAID super capacitor module.

To install a RAID super capacitor module, complete the following steps:

Watch the procedure

A video of this procedure is available at https://www.youtube.com/playlist?list=PLYV5R7hVcs-CWR-jaBNs-3tuilrybHfUJ.

Step 1. Gently press and hold the tab on the air baffle as shown, and insert the RAID super capacitor module into the holder on the air baffle.

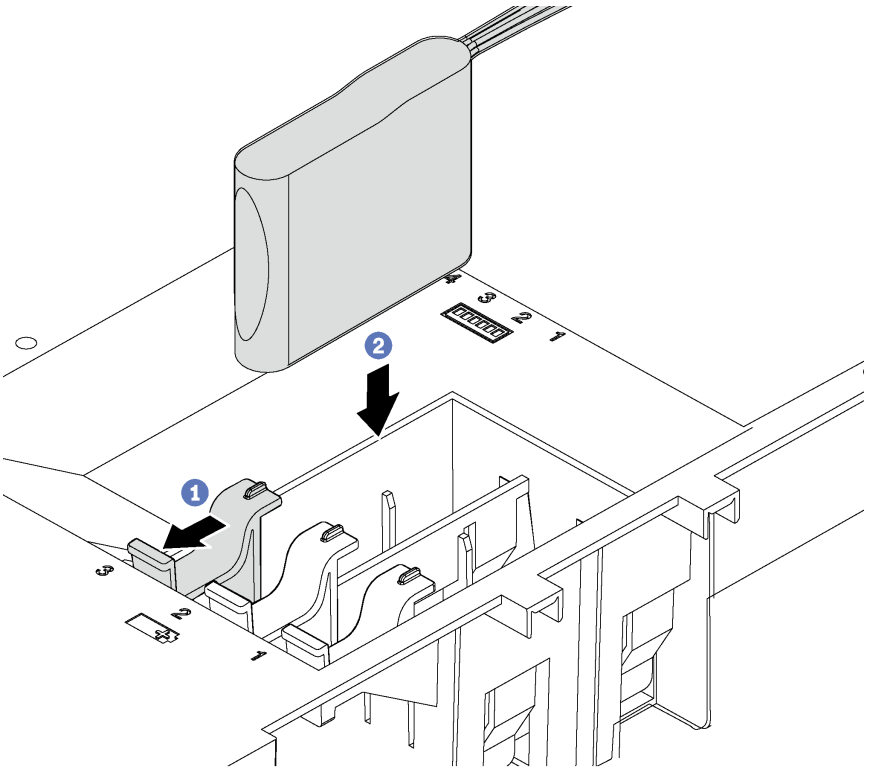

Figure 62. RAID super capacitor module installation

Step 2. Connect the RAID super capacitor module to a RAID adapter with the extension cable that comes with the RAID super capacitor module.

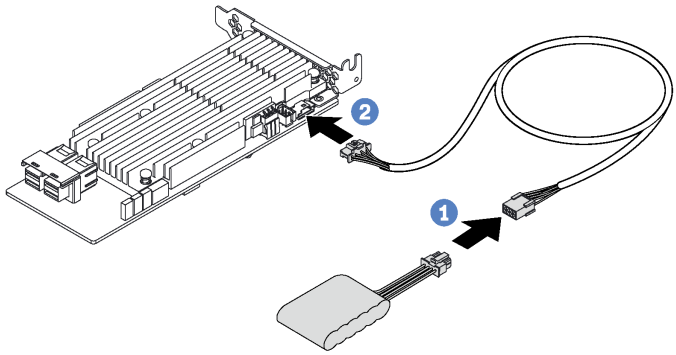

Figure 63. Connecting the RAID super capacitor module to the RAID adapter

Install the top cover

Use this information to install the top cover.


"**Read** the installation Guidelines" on page 56

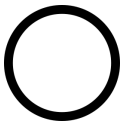
"**Power off** the server for this task" on page 113


"**ATTENTION: Static Sensitive Device** Ground package before opening" on page 58

Before you install the top cover:

1. Ensure that all cables, adapters, and other components are installed and seated correctly and that you have not left loose tools or parts inside the server.
2. Ensure that all internal cables are connected and routed correctly. See "Internal cable routing" on page 32.

To install the top cover, complete the following steps:

Watch the procedure

A video of this procedure is available at https://www.youtube.com/playlist?list=PLYV5R7hVcs-CWR-jaBNs-3tuilrybHfUJ.

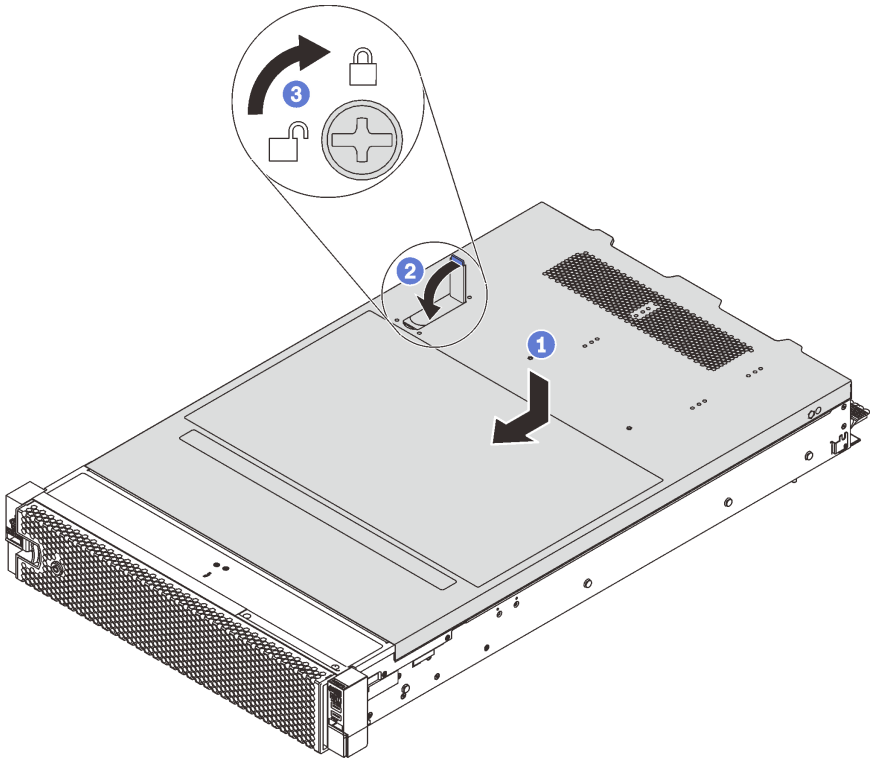

Figure 64. Top cover installation

Note: Before you slide the top cover forward, ensure that all the tabs on the top cover engage the chassis correctly. If the tabs do not engage the chassis correctly, it will be very difficult to remove the top cover later.

Step 1. Ensure that the cover latch is in the open position. Lower the top cover onto the chassis until both sides of the top cover engage the guides on both sides of the chassis.

Step 2. Pivot the cover latch and slide the top cover to the front of the chassis at the same time until the top cover snaps into position. Ensure that the cover latch is closed.

Step 3. Use a screwdriver to turn the cover lock to the locked position.

Install a hot-swap drive

Install a hot-swap drive by sliding it into the drive bay and closing the drive bay handle.

"**Read** the installation Guidelines" on page 56

"**ATTENTION: Static Sensitive Device** Ground package before opening" on page 58

The following notes describe the type of drives that your server supports and other information that you must consider when you install a drive and place it on a static-protective surface.

- Depending on your server models, your server supports the following drive types:
  - NVMe SSD
  - SAS/SATA SSD
  - SAS/SATA HDD

  For a list of supported drives, see:

https://static.lenovo.com/us/en/serverproven/index.shtml

- The drive bays are numbered to indicate the installation order (starting from number “0”). Follow the installation order when you install a drive. See “Front view” on page 17.
- You can mix drives of different types, different sizes, and different capacities in one system, but not in one RAID array. The following order is recommended when installing the drives:
  - Drive type priority: NVMe SSD, SAS SSD, SATA SSD, SAS HDD, SATA HDD
  - Drive size priority: 2.5 inch, 3.5 inch
  - Drive capacity priority: the lowest capacity first
- The drives in a single RAID array must be the same type, same size, and with the same capacity.
- Some server models support NVMe drives and the installed bays for NVMe drives vary by model:
  - For server models with a 2.5-inch AnyBay backplane installed, you can install up to four NVMe drives in the bays 4–7.
  - For server models with a 3.5-inch AnyBay backplane installed, you can install up to four NVMe drives in the bays 8–11.

Before installing a hot-swap drive:

1. Determine the available drive bays based on the drive bay labels. The following labels indicate the drive bays that can support NVMe drives. Otherwise, only SAS/SATA drives can be supported.

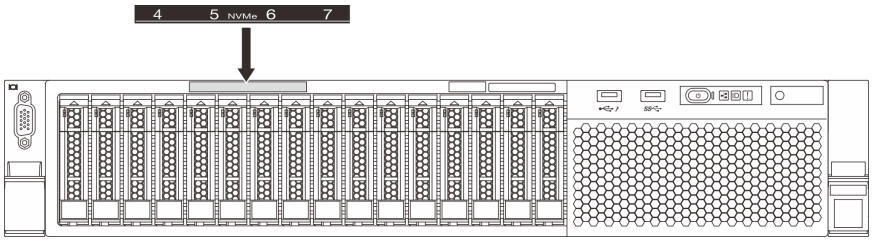

Figure 65. Drive bay labels for NVMe drives

Important: Ensure that you install the correct type of drives into corresponding drive bays. Drive type information is available on the bottom of the front side of a drive.

2. Remove the drive filler, and keep the drive filler in a safe place for future use.

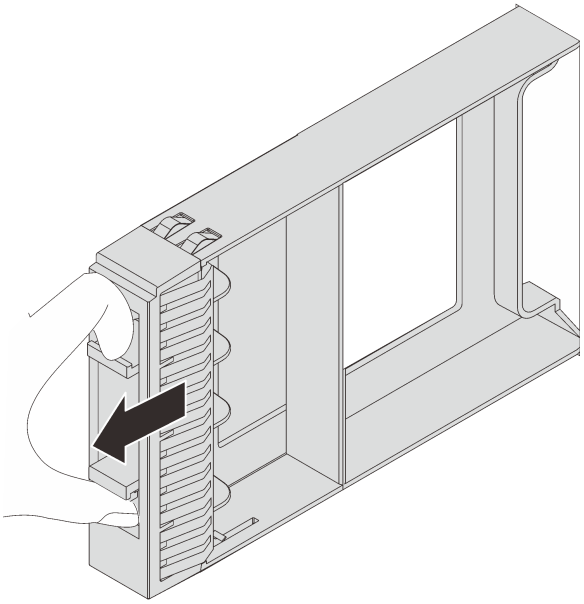

Figure 66. 2.5-inch drive filler removal

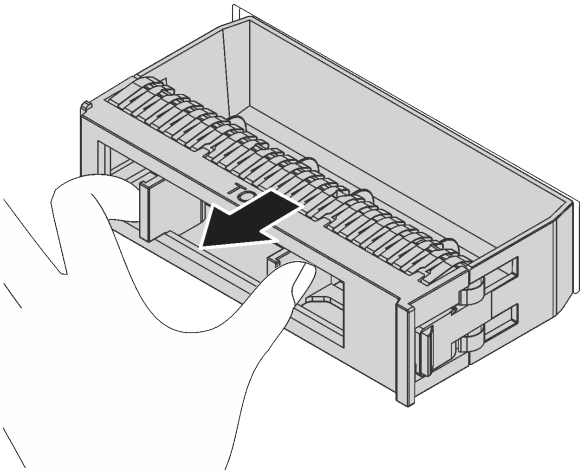

Figure 67. 3.5-inch drive filler removal

3. Touch the static-protective package that contains the new drive to any unpainted surface on the outside of the server. Then, take the new drive out of the package and place it on a static-protective surface.

To install a hot-swap drive, complete the following steps:

Watch the procedure

A video of this procedure is available at https://www.youtube.com/playlist?list=PLYV5R7hVcs-CWR-jaBNs-3tuilrybHfUJ.

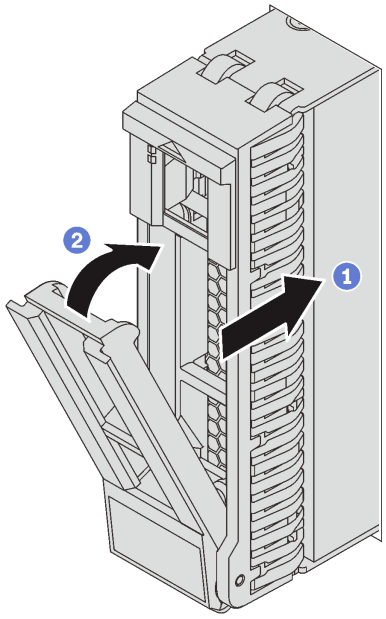

Figure 68. 2.5-inch hot-swap drive installation

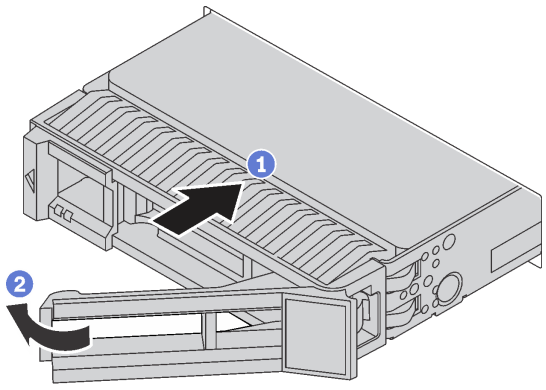

Figure 69. 3.5-inch hot-swap drive installation

Step 1. Ensure that the drive tray handle is in the open position. Slide the drive into the drive bay until it snaps into position.

Step 2. Close the drive tray handle to lock the drive in place.

Step 3. Check the drive status LED to verify that the drive is operating correctly.

- If the yellow drive status LED is lit continuously, that drive is faulty and must be replaced.
- If the green drive activity LED is flashing, the drive is being accessed.

Step 4. Continue to install additional hot-swap drives if necessary.

Install a simple-swap drive

Install a hot-swap drive by sliding it into the drive bay and closing the drive bay handle.



"Read the installation Guidelines" on page 56

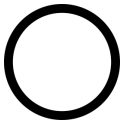

"Power off the server for this task" on page 113



"ATTENTION: Static Sensitive Device Ground package before opening" on page 58

The following notes describe the type of drives that your server supports and other information that you must consider when you install a drive.

- For a list of supported drives, see https://static.lenovo.com/us/en/serverproven/index.shtml.
- The drive bays are numbered to indicate the installation order (starting from number "0"). Follow the installation order when you install a drive.
- You can mix drives of different types and different capacities in one system, but not in one RAID array. The following order is recommended when installing the drives:
  - Drive type priority: SSD, SATA HDD
  - Drive capacity priority: the lowest capacity first

- The drives in a single RAID array must be the same type, same size, and with the same capacity.

Before installing a simple-swap drive:

1. Press the two tabs toward each other to remove the drive filler. Keep the drive filler in a safe place.

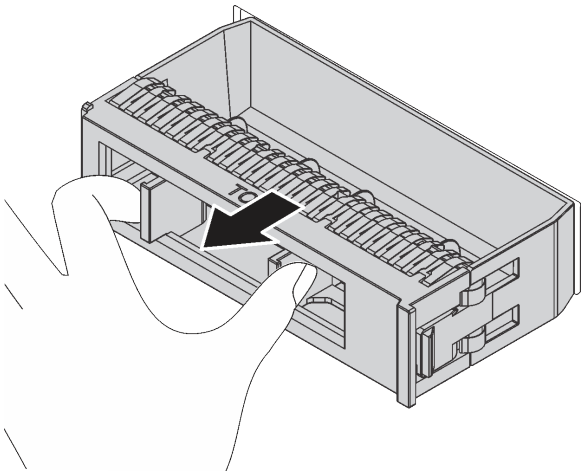

Figure 70. Drive filler removal

2. Touch the static-protective package that contains the new drive to any unpainted surface on the outside of the server. Then, take the new drive out of the package and place it on a static-protective surface.

To install a simple-swap drive, complete the following steps:

Watch the procedure

A video of this procedure is available at https://www.youtube.com/playlist?list=PLYV5R7hVcs-CWR-jaBNs-3tuilrybHfUJ.

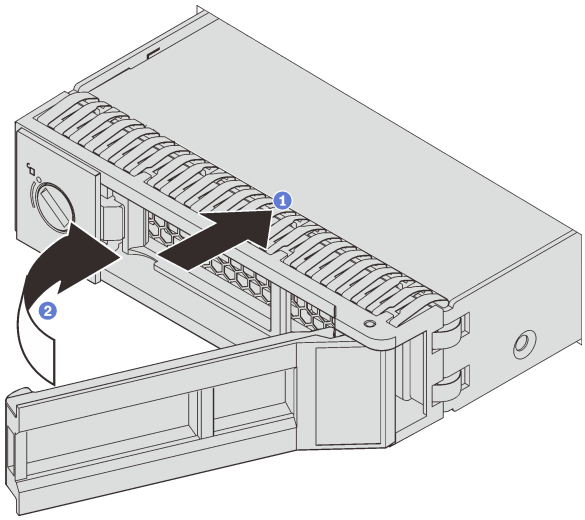

Figure 71. Simple-swap drive installation

Step 1. Ensure that the drive handle is in the open position. Slide the drive into the drive bay until it snaps into position.

Step 2. Rotate the tray handle to the closed position.

Install the server in a rack

To install the server in a rack, follow the instructions that are provided below.

To install the server in a rack, follow the instructions that are provided in the Rail Installation Kit for the rails on which the server will be installed.

Cable the server

Attach all external cables to the server. Typically, you will need to connect the server to a power source, to the data network, and to storage. In addition, you will need to connect the server to the management network.

Connect to power

Connect the server to power.

Connect to the network

Connect the server to the network.

Connect to storage

Connect the server to any storage devices.

Power on the server

After the server performs a short self-test (power status LED flashes quickly) when connected to input power, it enters a standby state (power status LED flashes once per second).

The server can be turned on (power LED on) in any of the following ways:

- You can press the power button.
- The server can restart automatically after a power interruption.
- The server can respond to remote power-on requests sent to the Lenovo XClarity Controller.

For information about powering off the server, see “Power off the server” on page 113.

Validate server setup

After powering up the server, make sure that the LEDs are lit and that they are green.

Power off the server

The server remains in a standby state when it is connected to a power source, allowing the Lenovo XClarity Controller to respond to remote power-on requests. To remove all power from the server (power status LED off), you must disconnect all power cables.

To place the server in a standby state (power status LED flashes once per second):

Note: The Lenovo XClarity Controller can place the server in a standby state as an automatic response to a critical system failure.

- Start an orderly shutdown using the operating system (if supported by your operating system).
- Press the power button to start an orderly shutdown (if supported by your operating system).

- Press and hold the power button for more than 4 seconds to force a shutdown.

When in a standby state, the server can respond to remote power-on requests sent to the Lenovo XClarity Controller. For information about powering on the server, see “Power on the server” on page 113.

Chapter 4. System configuration

Complete these procedures to configure your system.

Set the network connection for the Lenovo XClarity Controller

Before you can access the Lenovo XClarity Controller over your network, you need to specify how Lenovo XClarity Controller will connect to the network. Depending on how the network connection is implemented, you might need to specify a static IP address as well.

The following methods are available to set the network connection for the Lenovo XClarity Controller if you are not using DHCP:

- If a monitor is attached to the server, you can use Lenovo XClarity Controller to set the network connection.
- If no monitor attached to the server, you can set the network connection through the Lenovo XClarity Controller interface. Connect an Ethernet cable from your laptop to Lenovo XClarity Controller connector, which is located at the rear of the server. For the location of the Lenovo XClarity Controller connector, see "Rear view" on page 24.

  Note: Make sure that you modify the IP settings on the laptop so that it is on the same network as the server default settings.

  The default IPv4 address and the IPv6 Link Local Address (LLA) is provided on the Lenovo XClarity Controller Network Access label that is affixed to the Pull Out Information Tab.
- If you are using the Lenovo XClarity Administrator Mobile app from a mobile device, you can connect to the Lenovo XClarity Controller through the Lenovo XClarity Controller USB connector on the front of the server. For the location of the Lenovo XClarity Controller USB connector, see "Front view" on page 17.

  Note: The Lenovo XClarity Controller USB connector mode must be set to manage the Lenovo XClarity Controller (instead of normal USB mode). To switch from normal mode to Lenovo XClarity Controller management mode, hold the blue ID button on the front panel for at least 3 seconds until its LED flashes slowly (once every couple of seconds).

  To connect using the Lenovo XClarity Administrator Mobile app:

  1. Connect the USB cable of your mobile device to the Lenovo XClarity Administrator USB connector on the front panel.
  2. On your mobile device, enable USB tethering.
  3. On your mobile device, launch the Lenovo XClarity Administrator mobile app.
  4. If automatic discovery is disabled, click **Discovery** on the USB Discovery page to connect to the Lenovo XClarity Controller.

  For more information about using the Lenovo XClarity Administrator Mobile app, see:

  http://sysmgt.lenovofiles.com/help/topic/com.lenovo.lxca.doc/lxca_usemobileapp.html

Important: The Lenovo XClarity Controller is set initially with a user name of USERID and password of PASSW0RD (with a zero, not the letter O). This default user setting has Supervisor access. It is required to change this user name and password during your initial configuration for enhanced security.

Complete the following steps to connect the Lenovo XClarity Controller to the network using the Lenovo XClarity Provisioning Manager.

© Copyright Lenovo 2017, 2021

Step 1. Start the server.

Step 2. When you see <F1> Setup, press F1 to open up the Lenovo XClarity Provisioning Manager

Step 3. Go to **LXPM → UEFI Setup → BMC Settings** to specify how the Lenovo XClarity Controller will connect to the network.

- If you choose a static IP connection, make sure that you specify an IPv4 or IPv6 address that is available on the network.
- If you choose a DHCP connection, make sure that the MAC address for the server has been configured in the DHCP server.

Step 4. Click **OK** to continue starting the server.

Update the firmware

Several options are available to update the firmware for the server.

You can use the tools listed here to update the most current firmware for your server and the devices that are installed in the server.

Note: Lenovo typically releases firmware in bundles called UpdateXpress System Packs (UXSPs). To ensure that all of the firmware updates are compatible, you should update all firmware at the same time. If you are updating firmware for both the Lenovo XClarity Controller and UEFI, update the firmware for Lenovo XClarity Controller first.

Best practices related to updating firmware is available at the following location:

http://lenovopress.com/LP0656

Important terminology

- **In-band update**. The installation or update is performed using a tool or application within an operating system that is executing on the server's core CPU.
- **Out-of-band update**. The installation or update is performed by the Lenovo XClarity Controller collecting the update and then directing the update to the target subsystem or device. Out-of-band updates have no dependency on an operating system executing on the core CPU. However, most out-of-band operations do require the server to be in the S0 (Working) power state.
- **On-Target update.** The installation or update is initiated from an Operating System executing on the server's operating system.
- **Off-Target update.** The installation or update is initiated from a computing device interacting directly with the server's Lenovo XClarity Controller.
- **UpdateXpress System Packs (UXSPs)**. UXSPs are bundled updates designed and tested to provide the interdependent level of functionality, performance, and compatibility. UXSPs are server machine-type specific and are built (with firmware and device driver updates) to support specific Windows Server, Red Hat Enterprise Linux (RHEL) and SUSE Linux Enterprise Server (SLES) operating system distributions. Machine-type-specific firmware-only UXSPs are also available.

See the following table to determine the best Lenovo tool to use for installing and setting up the firmware:

Note: The server UEFI settings for option ROM must be set to **Auto** or **UEFI** to update firmware using Lenovo XClarity Administrator or Lenovo XClarity Essentials. For more information, see the following Tech Tip:

https://datacentersupport.lenovo.com/us/en/solutions/ht506118

Tool		In-band update	Out-of-band update	On-target update	Off-target update	Graphical user interface	Command-line interface	Supports UXSPs
Lenovo XClarity Provisioning Manager Limited to core system firmware only.		√[2]			√	√		√
Lenovo XClarity Controller Supports core system firmware and most advanced I/O option firmware updates			√		√	√	√	
Lenovo XClarity Essentials OneCLI Supports all core system firmware, I/O firmware, and installed operating system driver updates		√	√				√	√
Lenovo XClarity Essentials UpdateXpress Supports all core system firmware, I/O firmware, and installed operating system driver updates		√	√			√		√
Lenovo XClarity Essentials Bootable Media Creator Supports core system firmware and I/O firmware updates. You can update the Microsoft Windows operating system, but device drivers are not included on the bootable image		√				√	√	√
Lenovo XClarity Administrator Supports core system firmware and I/O firmware updates		√[1]	√[2]		√	√		
Lenovo XClarity Integrator offerings	**Lenovo XClarity Integrator for VMware vCenter** Supports all core system firmware, I/O firmware, and installed operating system driver updates		√		√	√		
	Lenovo XClarity Integrator for Microsoft Windows Admin Center Supports all core system firmware, I/O firmware, and installed operating system driver updates	√	√	√	√	√		

Tool		In-band update	Out-of-band update	On-target update	Off-target update	Graphical user interface	Command-line interface	Supports UXSPs
	Lenovo XClarity Integrator for Microsoft System Center Configuration Manager Supports all core system firmware, I/O firmware, and installed operating system driver updates	√		√		√		√

Notes:

1. For I/O firmware updates.
2. For BMC and UEFI firmware updates.

The latest firmware can be found at the following site:

http://datacentersupport.lenovo.com/products/servers/thinksystem/sr590/7x98/downloads

- **Lenovo XClarity Provisioning Manager**

  From Lenovo XClarity Provisioning Manager, you can update the Lenovo XClarity Controller firmware, the UEFI firmware, and the Lenovo XClarity Provisioning Manager software.

  Note: By default, the Lenovo XClarity Provisioning Manager Graphical User Interface is displayed when you press F1. If you have changed that default to be the text-based system setup, you can bring up the Graphical User Interface from the text-based system setup interface.

  Additional information about using Lenovo XClarity Provisioning Manager to update firmware is available at:

  http://sysmgt.lenovofiles.com/help/topic/LXPM/platform_update.html

- **Lenovo XClarity Controller**

  If you need to install a specific update, you can use the Lenovo XClarity Controller interface for a specific server.

  Notes:

  – To perform an in-band update through Windows or Linux, the operating system driver must be installed and the Ethernet-over-USB (sometimes called LAN over USB) interface must be enabled.

    Additional information about configuring Ethernet over USB is available at:

    http://sysmgt.lenovofiles.com/help/topic/com.lenovo.systems.management.xcc.doc/NN1ia_c_configuringUSB.html

  – If you update firmware through the Lenovo XClarity Controller, make sure that you have downloaded and installed the latest device drivers for the operating system that is running on the server.

  Specific details about updating firmware using Lenovo XClarity Controller are available at:

http://sysmgt.lenovofiles.com/help/topic/com.lenovo.systems.management.xcc.doc/NN1ia_c_manageserverfirmware.html

- **Lenovo XClarity Essentials OneCLI**

  Lenovo XClarity Essentials OneCLI is a collection of command line applications that can be used to manage Lenovo servers. Its update application can be used to update firmware and device drivers for your servers. The update can be performed within the host operating system of the server (in-band) or remotely through the BMC of the server (out-of-band).

  Specific details about updating firmware using Lenovo XClarity Essentials OneCLI is available at:

  http://sysmgt.lenovofiles.com/help/topic/toolsctr_cli_lenovo/onecli_c_update.html

- **Lenovo XClarity Essentials UpdateXpress**

  Lenovo XClarity Essentials UpdateXpress provides most of OneCLI update functions through a graphical user interface (GUI). It can be used to acquire and deploy UpdateXpress System Pack (UXSP) update packages and individual updates. UpdateXpress System Packs contain firmware and device driver updates for Microsoft Windows and for Linux.

  You can obtain Lenovo XClarity Essentials UpdateXpress from the following location:

  https://datacentersupport.lenovo.com/solutions/lnvo-xpress

- **Lenovo XClarity Essentials Bootable Media Creator**

  You can use Lenovo XClarity Essentials Bootable Media Creator to create bootable media that is suitable for applying firmware updates, running preboot diagnostics, and deploying Microsoft Windows operating systems.

  You can obtain Lenovo XClarity Essentials BoMC from the following location:

  https://datacentersupport.lenovo.com/solutions/lnvo-bomc

- **Lenovo XClarity Administrator**

  If you are managing multiple servers using the Lenovo XClarity Administrator, you can update firmware for all managed servers through that interface. Firmware management is simplified by assigning firmware-compliance policies to managed endpoints. When you create and assign a compliance policy to managed endpoints, Lenovo XClarity Administrator monitors changes to the inventory for those endpoints and flags any endpoints that are out of compliance.

  Specific details about updating firmware using Lenovo XClarity Administrator are available at:

  http://sysmgt.lenovofiles.com/help/topic/com.lenovo.lxca.doc/update_fw.html

- **Lenovo XClarity Integrator offerings**

  Lenovo XClarity Integrator offerings can integrate management features of Lenovo XClarity Administrator and your server with software used in a certain deployment infrastructure, such as VMware vCenter, Microsoft Admin Center, or Microsoft System Center.

  Specific details about updating firmware using Lenovo XClarity Integrator offerings are available at:

  https://sysmgt.lenovofiles.com/help/topic/lxci/lxci_product_page.html

Configure the firmware

Several options are available to install and set up the firmware for the server.

Important: Do not configure option ROMs to be set to **Legacy** unless directed to do so by Lenovo Support. This setting prevents UEFI drivers for the slot devices from loading, which can cause negative side effects for Lenovo software, such as Lenovo XClarity Administrator and Lenovo XClarity Essentials OneCLI, and to the

Lenovo XClarity Controller. The side effects include the inability to determine adapter card details, such as model name and firmware levels. When adapter card information is not available, generic information for the model name, such as "Adapter 06:00:00" instead of the actually model name, such as "ThinkSystem RAID 930-16i 4GB Flash." In some cases, the UEFI boot process might also hang.

- **Lenovo XClarity Provisioning Manager**

  From Lenovo XClarity Provisioning Manager, you can configure the UEFI settings for your server.

  Note: The Lenovo XClarity Provisioning Manager provides a Graphical User Interface to configure a server. The text-based interface to system configuration (the Setup Utility) is also available. From Lenovo XClarity Provisioning Manager, you can choose to restart the server and access the text-based interface. In addition, you can choose to make the text-based interface the default interface that is displayed when you press F1.

- **Lenovo XClarity Essentials OneCLI**

  You can use the config application and commands to view the current system configuration settings and make changes to Lenovo XClarity Controller and UEFI. The saved configuration information can be used to replicate or restore other systems.

  For information about configuring the server using Lenovo XClarity Essentials OneCLI, see:

  http://sysmgt.lenovofiles.com/help/topic/toolsctr_cli_lenovo/onecli_c_settings_info_commands.html

- **Lenovo XClarity Administrator**

  You can quickly provision and pre-provision all of your servers using a consistent configuration. Configuration settings (such as local storage, I/O adapters, boot settings, firmware, ports, and Lenovo XClarity Controller and UEFI settings) are saved as a server pattern that can be applied to one or more managed servers. When the server patterns are updated, the changes are automatically deployed to the applied servers.

  Specific details about updating firmware using Lenovo XClarity Administrator are available at:

  http://sysmgt.lenovofiles.com/help/topic/com.lenovo.lxca.doc/server_configuring.html

- **Lenovo XClarity Controller**

  You can configure the management processor for the server through the Lenovo XClarity Controller Web interface or through the command-line interface.

  For information about configuring the server using Lenovo XClarity Controller, see:

  http://sysmgt.lenovofiles.com/help/topic/com.lenovo.systems.management.xcc.doc/NN1ia_c_manageserverfirmware.html

Memory configuration

Memory performance depends on several variables, such as memory mode, memory speed, memory ranks, memory population and processor.

More information about optimizing memory performance and configuring memory is available at the Lenovo Press website:

https://lenovopress.com/servers/options/memory

In addition, you can take advantage of a memory configurator, which is available at the following site:

http://1config.lenovo.com/#/memory_configuration

For specific information about the required installation order of memory modules in your server based on the system configuration and memory mode that you are implementing, see “DIMM installation rules” on page 70.

Configure DC Persistent Memory Module (DCPMM)

Follow the instructions in this section to configure DCPMMs and DRAM DIMMs.

DCPMM capacity could act as accessible persistent memory for applications or volatile system memory. Based on the approximate percentage of DCPMM capacity invested in volatile system memory, the following three operating modes are available for choice:

- **App Direct Mode** (0% of DCPMM capacity acts as system memory):

  In this mode, DCPMMs act as independent and persistent memory resources directly accessible by specific applications, and DRAM DIMMs act as system memory.

  The total displayed volatile system memory in this mode is the sum of DRAM DIMM capacity.

  Notes:

  – In App Direct Mode, the DRAM DIMMs that are installed can be configured to mirror mode.
  – When only one DCPMM is installed for each processor, only not-interleaved App Direct Mode is supported.
- **Mixed Memory Mode** (1-99% of DCPMM capacity acts as system memory):

  In this mode, some percentage of DCPMM capacity is directly accessible to specific applications (App Direct), while the rest serves as system memory. The App Direct part of DCPMM is displayed as persistent memory, while the rest of DCPMM capacity is displayed as system memory. DRAM DIMMs act as cache in this mode.

  The total displayed volatile system memory in this mode is the DCPMM capacity that is invested in volatile system memory.
- **Memory Mode** (100% of DCPMM capacity acts as system memory):

  In this mode, DCPMMs act as volatile system memory, while DRAM DIMMs act as cache.

  The total displayed volatile system memory in this mode is the sum of DCPMM capacity.

DCPMM Management options

DCPMMs can be managed with the following tools:

- **Lenovo XClarity Provisioning Manager (LXPM)**

  To open LXPM, power on the system and press **F1** as soon as the logo screen appears. If a password has been set, enter the password to unlock LXPM.

  Go to **UEFI Setup → System Settings → Intel Optane DCPMMs** to configure and manage DCPMMs.

  For more details, see https://sysmgt.lenovofiles.com/help/topic/LXPM/UEFI_setup.html.

  Note: If the text-based interface of Setup Utility opens instead of LXPM, go to **System Settings → <F1> Start Control** and select **Tool Suite**. Then, reboot the system and press **F1** as soon as the logo screen appears to open Lenovo XClarity Provisioning Manager.
- **Setup Utility**

  To enter Setup Utility:

  1. Power on the system and press **F1** to open LXPMF.

2. Go to **UEFI Settings → System Settings**, click on the pull-down menu on the upper right corner of the screen, and select **Text Setup**.
3. Reboot the system, and press **F1** as soon as the logo screen appears.

Go to **System Configuration and Boot Management → System Settings → Intel Optane DCPMMs** to configure and manage DCPMMs.

- **Lenovo XClarity Essentials OneCLI**

  Some management options are available in commands that are executed in the path of Lenovo XClarity Essentials OneCLI in the operating system. See https://sysmgt.lenovofiles.com/help/topic/toolsctr_cli_lenovo/onecli_t_download_use_tcscli.html to learn how to download and use Lenovo XClarity Essentials OneCLI.

Following are the available management options:

- **Intel Optane DCPMM details**

  Select this option to view the following details concerning each of the the installed DCPMMs:

  – Firmware version
  – Configuration status
  – Raw capacity
  – Memory capacity
  – App Direct capacity
  – Unconfigured capacity
  – Inaccessible capacity
  – Reserved capacity
  – Percentage remaining
  – Security state

  Alternatively, view DCPMM details with the following command in OneCLI:

  ```
  onecli.exe config show IntelOptaneDCPMM --imm USERID:PASSW0RD@10.104.195.86
  ```

  Notes:
  – *USERID* stands for XCC user ID.
  – *PASSW0RD* stands for XCC user password.
  – *10.104.195.86* stands for IP address.

- **Goals**

  – **Memory Mode [%]**

    Select this option to define the percentage of DCPMM capacity that is invested in system memory, and hence decide the DCPMM mode:

    – **0%:** App Direct Mode
    – **1-99%:** Mixed Memory Mode
    – **100%:** Memory Mode

    Go to **Goals → Memory Mode [%]**, input the memory percentage, and reboot the system.

    Notes:

    – Before changing from one mode to another:

      1. Back up all the data and delete all the created namespaces. Go to **Namespaces → View/Modify/Delete Namespaces** to delete the created namespaces.
      2. Perform secure erase on all the installed DCPMMs. Go to **Security → Press to Secure Erase** to perform secure erase.

– Make sure the capacity of installed DCPMMs and DRAM DIMMs meets system requirements for the new mode (see “DCPMM and DRAM DIMM installation rules” on page 75).

– After the system is rebooted and the input goal value is applied, the displayed value in **System Configuration and Boot Management → Intel Optane DCPMMs → Goals** will go back to the following default selectable options:

  - **Scope:** [Platform]
  - **Memory Mode [%]:** 0
  - **Persistent Memory Type:** [App Direct]

  These values are selectable options for DCPMM settings, and do not represent the current DCPMM status.

In addition, you can take advantage of a memory configurator, which is available at the following site: http://1config.lenovo.com/#/memory_configuration

Alternatively, set DCPMM Goals with the following commands in OneCLI:

1. Set create goal status.

   ```
   onecli.exe config set IntelOptaneDCPMM.CreateGoal Yes --imm USERID:PASSWORD@10.104.195.86
   ```

2. Define the DCPMM capacity that is invested in system volatile memory.

   ```
   onecli.exe config set IntelOptaneDCPMM.MemoryModePercentage 20 --imm USERID:PASSWORD@10.104.195.86
   ```

   Where *20* stands for the percentage of capacity that is invested in system volatile memory.

3. Set the DCPMM mode.

   ```
   onecli.exe config set IntelOptaneDCPMM.PersistentMemoryType "App Direct" --imm
   USERID:PASSWORD@10.104.195.86
   ```

   Where *App Direct* stands for the DCPMM mode.

– **Persistent Memory Type**

In App Direct Mode and Mixed Memory Mode, the DCPMMs that are connected to the same processor are by default interleaved (displayed as **App Direct**), while memory banks are used in turns. To set them as not interleaved in the Setup Utility, go to **Intel Optane DCPMMs → Goals → Persistent Memory Type [(DCPMM mode)]**, select **App Direct Not Interleaved** and reboot the system.

Note: Setting DCPMM App Direct capacity to not interleaved will turn the displayed App Direct regions from one region per processor to one region per DCPMM.

- **Regions**

After the memory percentage is set and the system is rebooted, regions for the App Direct capacity will be generated automatically. Select this option to view the App Direct regions.

- **Namespaces**

App Direct capacity of DCPMMs requires the following steps before it is truly available for applications.

1. Namespaces must be created for region capacity allocation.
2. Filesystem must be created and formatted for the namespaces in the operating system.

Each App Direct region can be allocated into one namespace. Create namespaces in the following operating systems:

– Windows: Use *Pmem* command.

– Linux: Use *ndctl* command.

– VMware: Reboot the system, and VMware will create namespaces automatically.

After creating namespaces for App Direct capacity allocation, make sure to create and format filesystem in the operating system so that the App Direct capacity is accessible for applications.

- **Security**
  - Enable Security

    Attention: By default, DCPMM security is disabled. Before enabling security, make sure all the country or local legal requirements regarding data encryption and trade compliance are met. Violation could cause legal issues.

    DCPMMs can be secured with passphrases. Two types of passphrase protection scope are available for DCPMM:

    - **Platform:** Choose this option to run security operation on all the installed DCPMM units at once. A platform passphrase is stored and automatically applied to unlock DCPMMs before operating system starts running, but the passphrase still has to be disabled manually for secure erase.

      Alternatively, enable/disable platform level security with the following commands in OneCLI:

      - Enable security:
        1. Enable security.

           ```
           onecli.exe config set IntelOptaneDCPMM.SecurityOperation "Enable Security" --imm
           USERID:PASSWORD@10.104.195.86
           ```

        2. Set the security passphrase.

           ```
           onecli.exe config set IntelOptaneDCPMM.SecurityPassphrase "123456" --imm
           USERID:PASSWORD@10.104.195.86
           ```

           Where *123456* stands for the passphrase.

        3. Reboot the system.
      - Disable security:
        1. Disable security.

           ```
           onecli.exe config set IntelOptaneDCPMM.SecurityOperation "Disable Security" --imm
           USERID:PASSWORD@10.104.195.86
           ```

        2. Enter passphrase.

           ```
           onecli.exe config set IntelOptaneDCPMM.SecurityPassphrase "123456" --imm
           USERID:PASSWORD@10.104.195.86
           ```

        3. Reboot the system.
    - **Single DCPMM:** Choose this option to run security operation on one or more selected DCPMM units.

      Notes:

      - Single DCPMM passphrases are not stored in the system, and security of the locked units needs to be disabled before the units are available for access or secure erase.
      - Always make sure to keep records of the slot number of locked DCPMMs and corresponding passphrases. In the case the passphrases are lost or forgotten, the stored data cannot be backed up or restored, but you can contact Lenovo service for administrative secure erase.
      - After three failed unlocking attempts, the corresponding DCPMMs enter “exceeded” state with a system warning message, and the DCPMM unit can only be unlocked after the system is rebooted.

      To enable passphrase, go to **Security → Press to Enable Security**.
  - Secure Erase

Note: If the DCPMMs to be secure erased are protected with a passphrase, make sure to disable security and reboot the system before performing secure erase.

Secure erase cleanses all the data that is stored in the DCPMM unit, including encrypted data. This data deletion method is recommended before returning or disposing a malfunctioning unit, or changing DCPMM mode. To perform secure erase, go to **Security → Press to Secure Erase**.

Alternatively, perform platform level secure erase with the following command in OneCLI:

```
onecli.exe config set IntelOptaneDCPMM.SecurityOperation "Secure Erase Without Passphrase" --imm
USERID:PASSWORD@10.104.195.86
```

- **DCPMM Configuration**

  DCPMM contains spared internal cells to stand in for the failed ones. When the spared cells are exhausted to 0%, there will be an error message, and it is advised to back up data, collect service log, and contact Lenovo support.

  There will also be a warning message when the percentage reaches 1% and a selectable percentage (10% by default). When this message appears, it is advised to back up data and run DCPMM diagnostics (see https://sysmgt.lenovofiles.com/help/topic/LXPM/running_diagnostics.html). To adjust the selectable percentage that the warning message requires, go to **Intel Optane DCPMMs → DCPMM Configuration**, and input the percentage.

  Alternatively, change the selectable percentage with the following command in OneCLI:

  ```
  onecli.exe config set IntelOptaneDCPMM.PercentageRemainingThresholds 20 --imm USERID:PASSWORD@10.104.195.86
  ```

  Where *20* is the selectable percentage.

RAID configuration

Using a Redundant Array of Independent Disks (RAID) to store data remains one of the most common and cost-efficient methods to increase server's storage performance, availability, and capacity.

RAID increases performance by allowing multiple drives to process I/O requests simultaneously. RAID can also prevent data loss in case of a drive failure by reconstructing (or rebuilding) the missing data from the failed drive using the data from the remaining drives.

RAID array (also known as RAID drive group) is a group of multiple physical drives that uses a certain common method to distribute data across the drives. A virtual drive (also known as virtual disk or logical drive) is a partition in the drive group that is made up of contiguous data segments on the drives. Virtual drive is presented up to the host operating system as a physical disk that can be partitioned to create OS logical drives or volumes.

An introduction to RAID is available at the following Lenovo Press website:

https://lenovopress.com/lp0578-lenovo-raid-introduction

Detailed information about RAID management tools and resources is available at the following Lenovo Press website:

https://lenovopress.com/lp0579-lenovo-raid-management-tools-and-resources

Deploy the operating system

Several options are available to deploy an operating system on the server.

Tool-based deployment

- **Multi-server**

  Available tools:

  – Lenovo XClarity Administrator

  http://sysmgt.lenovofiles.com/help/topic/com.lenovo.lxca.doc/compute_node_image_deployment.html

  – Lenovo XClarity Essentials OneCLI

  http://sysmgt.lenovofiles.com/help/topic/toolsctr_cli_lenovo/onecli_r_uxspi_proxy_tool.html

- **Single-server**

  Available tools:

  – Lenovo XClarity Provisioning Manager

  https://sysmgt.lenovofiles.com/help/topic/LXPM/os_installation.html

  – Lenovo XClarity Essentials OneCLI

  http://sysmgt.lenovofiles.com/help/topic/toolsctr_cli_lenovo/onecli_r_uxspi_proxy_tool.html

Manual deployment

If you cannot access the above tools, follow the instructions below, download the corresponding *OS Installation Guide*, and deploy the operating system manually by referring to the guide.

1. Go to https://datacentersupport.lenovo.com/solutions/server-os.
2. Select an operating system from the navigation pane and click **Resources**.
3. Locate the “OS Install Guides” area and click the installation instructions. Then, follow the instructions to complete the operation system deployment task.

Back up the server configuration

After setting up the server or making changes to the configuration, it is a good practice to make a complete backup of the server configuration.

Make sure that you create backups for the following server components:

- **Management processor**

  You can back up the management processor configuration through the Lenovo XClarity Controller interface. For details about backing up the management processor configuration, see:

  http://sysmgt.lenovofiles.com/help/topic/com.lenovo.systems.management.xcc.doc/NN1ia_c_backupthexcc.html

  Alternatively, you can use the `save` command from Lenovo XClarity Essentials OneCLI to create a backup of all configuration settings. For more information about the `save` command, see:

  http://sysmgt.lenovofiles.com/help/topic/toolsctr_cli_lenovo/onecli_r_save_command.html

- **Operating system**

  Use your own operating-system and user-data backup methods to back up the operating system and user data for the server.

Update the Vital Product Data (VPD)

After initial setup of the system, you can update some Vital Product Data (VPD), such as asset tag and Universal Unique Identifier (UUID).

Update the Universal Unique Identifier (UUID)

Optionally, you can update the Universal Unique Identifier (UUID).

There are two methods available to update the UUID:

- From Lenovo XClarity Provisioning Manager V3

  To update the UUID from Lenovo XClarity Provisioning Manager V3:

  1. Start the server and press F1 to display the Lenovo XClarity Provisioning Manager V3 interface.
  2. If the power-on Administrator password is required, enter the password.
  3. From the System Summary page, click **Update VPD**.
  4. Update the UUID.

- From Lenovo XClarity Essentials OneCLI

  Lenovo XClarity Essentials OneCLI sets the UUID in the Lenovo XClarity Controller. Select one of the following methods to access the Lenovo XClarity Controller and set the UUID:

  – Operate from the target system, such as LAN or keyboard console style (KCS) access
  – Remote access to the target system (TCP/IP based)

  To update the UUID from Lenovo XClarity Essentials OneCLI:

  1. Download and install Lenovo XClarity Essentials OneCLI.

     To download Lenovo XClarity Essentials OneCLI, go to the following site:

     https://datacentersupport.lenovo.com/solutions/HT116433

  2. Copy and unpack the OneCLI package, which also includes other required files, to the server. Make sure that you unpack the OneCLI and the required files to the same directory.
  3. After you have Lenovo XClarity Essentials OneCLI in place, type the following command to set the UUID:

     ```
     onecli config set SYSTEM_PROD_DATA.SysInfoUUID <uuid_value> [access_method]
     ```

     Where:

     <uuid_value>
     Up to 16-byte hexadecimal value assigned by you.

     [access_method]
     The access method that you select to use from the following methods:

     – Online authenticated LAN access, type the command:

       ```
       [--bmc-username xcc_user_id --bmc-password xcc_password]
       ```

       Where:

       xcc_user_id
       The BMC/IMM/XCC account name (1 of 12 accounts). The default value is USERID.

       xcc_password
       The BMC/IMM/XCC account password (1 of 12 accounts).

       Example command is as follows:
       ```
       onecli config set SYSTEM_PROD_DATA.SysInfoUUID <uuid_value>
       --bmc-username xcc_user_id
       --bmc-password xcc_password]
       ```

     – Online KCS access (unauthenticated and user restricted):

You do not need to specify a value for *access_method* when you use this access method.

Example command is as follows:`onecli config set SYSTEM_PROD_DATA.SysInfoUUID <uuid_value>`

Note: The KCS access method uses the IPMI/KCS interface, which requires that the IPMI driver be installed.

- Remote LAN access, type the command:

  `[--bmc xcc_user_id:xcc_password@xcc_external_ip]`

  Where:

  xcc_external_ip
  The BMC/IMM/XCC external IP address. There is no default value. This parameter is required.

  xcc_user_id
  The BMC/IMM/XCC account name (1 of 12 accounts). The default value is USERID.

  xcc_password
  The BMC/IMM/XCC account password (1 of 12 accounts).

  Note: BMC, IMM, or XCC external IP address, account name, and password are all valid for this command.

  Example command is as follows:`onecli config set SYSTEM_PROD_DATA.SysInfoUUID <uuid_value> --bmc xcc_user_id:xcc_password@xcc_external_ip`

4. Restart the Lenovo XClarity Controller.
5. Restart the server.

Update the asset tag

Optionally, you can update the asset tag.

There are two methods available to update the asset tag:

- From Lenovo XClarity Provisioning Manager V3

  To update the asset tag from Lenovo XClarity Provisioning Manager V3:

  1. Start the server and press F1 to display the Lenovo XClarity Provisioning Manager V3 interface.
  2. If the power-on Administrator password is required, enter the password.
  3. From the System Summary page, click **Update VPD**.
  4. Update the asset tag information.

- From Lenovo XClarity Essentials OneCLI

  Lenovo XClarity Essentials OneCLI sets the asset tag in the Lenovo XClarity Controller. Select one of the following methods to access the Lenovo XClarity Controller and set the asset tag:

  - Operate from the target system, such as LAN or keyboard console style (KCS) access
  - Remote access to the target system (TCP/IP based)

  To update the asset tag from Lenovo XClarity Essentials OneCLI:

  1. Download and install Lenovo XClarity Essentials OneCLI.

     To download Lenovo XClarity Essentials OneCLI, go to the following site:

     https://datacentersupport.lenovo.com/solutions/HT116433

2. Copy and unpack the OneCLI package, which also includes other required files, to the server. Make sure that you unpack the OneCLI and the required files to the same directory.
3. After you haveLenovo XClarity Essentials OneCLI in place, type the following command to set the DMI:

   `onecli config set SYSTEM_PROD_DATA.SysEncloseAssetTag <asset_tag> [access_method]`

   Where:

   <asset_tag>
   The server asset tag number. Type `asset aaaaaaaaaaaaaaaaaaaaaaaaaaaaaaaa`, where *aaaaaaaaaaaaaaaaaaaaaaaaaaaaaaaa* is the asset tag number.

   [access_method]
   The access method that you select to use from the following methods:

   – Online authenticated LAN access, type the command:

     [**--bmc**-username xcc_user_id **--bmc**-password xcc_password]

     Where:

     xcc_user_id
     The BMC/IMM/XCC account name (1 of 12 accounts). The default value is USERID.

     xcc_password
     The BMC/IMM/XCC account password (1 of 12 accounts).

     Example command is as follows: `onecli config set SYSTEM_PROD_DATA.SysEncloseAssetTag <asset_tag>` **--bmc**-username xcc_user_id
     --bmc-password xcc_password

   – Online KCS access (unauthenticated and user restricted):

     You do not need to specify a value for *access_method* when you use this access method.

     Example command is as follows:`onecli config set SYSTEM_PROD_DATA.SysEncloseAssetTag <asset_tag>`

     Note: The KCS access method uses the IPMI/KCS interface, which requires that the IPMI driver be installed.

   – Remote LAN access, type the command:[**––bmc** xcc_user_id:xcc_password@xcc_external_ip]

     Where:

     xcc_external_ip
     The BMC/IMM/XCC IP address. There is no default value. This parameter is required.

     xcc_user_id
     The BMC/IMM/XCC account (1 of 12 accounts). The default value is USERID.

     xcc_password
     The BMC/IMM/XCC account password (1 of 12 accounts).

     Note: BMC, IMM, or XCC internal LAN/USB IP address, account name, and password are all valid for this command.

     Example command is as follows: `onecli config set SYSTEM_PROD_DATA.SysEncloseAssetTag <asset_tag>`
     ––bmc xcc_user_id:xcc_password@xcc_external_ip

4. Reset the Lenovo XClarity Controller to the factory defaults. Go to https://sysmgt.lenovofiles.com/help/topic/com.lenovo.systems.management.xcc.doc/NN1ia_c_resettingthexcc.html for more information.

Chapter 5. Resolving installation issues

Use this information to resolve issues that you might have when setting up your system.

Use the information in this section to diagnose and resolve problems that you might encounter during the initial installation and setup of your server.

- "Server does not power on" on page 131
- "The server immediately displays the POST Event Viewer when it is turned on" on page 131
- "Embedded hypervisor is not in the boot list" on page 131
- "Server cannot recognize a hard drive" on page 132
- "Displayed system memory less than installed physical memory" on page 133
- "A Lenovo optional device that was just installed does not work." on page 134
- "Voltage planar fault is displayed in the event log" on page 134

Server does not power on

Complete the following steps until the problem is resolved:

1. Check the event log for any events related to the server not powering on.
2. Check for any LEDs that are flashing amber.
3. Check the power LED on the system board.
4. Reseat the power supply.
5. Replace the power supply.

The server immediately displays the POST Event Viewer when it is turned on

Complete the following steps until the problem is solved.

1. Correct any errors that are indicated by the light path diagnostics LEDs.
2. Make sure that the server supports all the processors and that the processors match in speed and cache size.

   You can view processor details from system setup.

   To determine if the processor is supported for the server, see https://static.lenovo.com/us/en/serverproven/index.shtml.
3. (Trained technician only) Make sure that processor 1 is seated correctly
4. (Trained technician only) Remove processor 2 and restart the server.
5. Replace the following components one at a time, in the order shown, restarting the server each time:
   a. (Trained technician only) Processor
   b. (Trained technician only) System board

Embedded hypervisor is not in the boot list

Complete the following steps until the problem is solved.

1. If the server has been installed, moved, or serviced recently, or if this is the first time the embedded hypervisor is being used, make sure that the device is connected properly and that there is no physical damage to the connectors.
2. See the documentation that comes with the optional embedded hypervisor flash device for setup and configuration information.

© Copyright Lenovo 2017, 2021

3. Check https://static.lenovo.com/us/en/serverproven/index.shtml to validate that the embedded hypervisor device is supported for the server.
4. Make sure that the embedded hypervisor device is listed in the list of available boot options. From the management controller user interface, click **Server Configuration → Boot Options**.

   For information about accessing the management controller user interface, see the XClarity Controller product documentation:

   http://sysmgt.lenovofiles.com/help/topic/com.lenovo.systems.management.xcc.doc/dw1lm_c_chapter2_openingandusing.html
5. Check http://datacentersupport.lenovo.com for any tech tips (service bulletins) related to the embedded hypervisor and the server.
6. Make sure that other software works on the server to ensure that it is working properly.

Server cannot recognize a hard drive

Complete the following steps until the problem is solved.

1. Observe the associated yellow hard disk drive status LED. If the LED is lit, it indicates a drive fault.
2. If the LED is lit, remove the drive from the bay, wait 45 seconds, and reinsert the drive, making sure that the drive assembly connects to the hard disk drive backplane.
3. Observe the associated green hard disk drive activity LED and the yellow status LED:
   - If the green activity LED is flashing and the yellow status LED is not lit, the drive is recognized by the controller and is working correctly. Run the diagnostics tests for the hard disk drives. When you start a server and press F1, the Lenovo XClarity Provisioning Manager interface is displayed by default. You can perform hard drive diagnostics from this interface. From the Diagnostic page, click **Run Diagnostic → HDD test**.
   - If the green activity LED is flashing and the yellow status LED is flashing slowly, the drive is recognized by the controller and is rebuilding.
   - If neither LED is lit or flashing, check the hard disk drive backplane.
   - If the green activity LED is flashing and the yellow status LED is lit, replace the drive. If the activity of the LEDs remains the same, go to step Hard disk drive problems. If the activity of the LEDs changes, return to step 1.
4. Make sure that the hard disk drive backplane is correctly seated. When it is correctly seated, the drive assemblies correctly connect to the backplane without bowing or causing movement of the backplane.
5. Reseat the backplane power cable and repeat steps 1 through 3.
6. Reseat the backplane signal cable and repeat steps 1 through 3.
7. Suspect the backplane signal cable or the backplane:
   - Replace the affected backplane signal cable.
   - Replace the affected backplane.
8. Run the diagnostics tests for the hard disk drives. When you start a server and press F1, the Lenovo XClarity Provisioning Manager interface is displayed by default. You can perform hard drive diagnostics from this interface. From the Diagnostic page, click **Run Diagnostic → HDD test**.

   Based on those tests:

   - If the adapter passes the test but the drives are not recognized, replace the backplane signal cable and run the tests again.
   - Replace the backplane.
   - If the adapter fails the test, disconnect the backplane signal cable from the adapter and run the tests again.

- If the adapter fails the test, replace the adapter.

Displayed system memory less than installed physical memory

Complete the following steps until the problem is solved:

Note: Each time you install or remove a memory module, you must disconnect the solution from the power source; then, wait 10 seconds before restarting the solution.

1. Make sure that:
   - No error LEDs are lit on the operator information panel.
   - Memory mirrored channel does not account for the discrepancy.
   - The memory modules are seated correctly.
   - You have installed the correct type of memory module (see "Specifications" on page 5 for requirements).
   - If you changed the memory, you updated the memory configuration in the Setup utility.
   - All banks of memory are enabled. The solution might have automatically disabled a memory bank when it detected a problem, or a memory bank might have been manually disabled.
   - There is no memory mismatch when the solution is at the minimum memory configuration.
   - When DCPMMs are installed:
     a. If the memory is set in App Direct or Mixed Memory Mode, all the saved data have been backed up, and created namespaces are deleted before any DCPMM is replaced.
     b. Refer to "DC Persistent Memory Module (DCPMM) setup" on page 68 and see if the displayed memory fits the mode description.
     c. If DCPMMs are recently set in Memory Mode, turn it back to App Direct Mode and examine if there is namespace that has not been deleted (see "DC Persistent Memory Module (DCPMM) setup" on page 68).
     d. Go to the Setup Utility, select **System Configuration and Boot Management → Intel Optane DCPMMs → Security**, and make sure all the DCPMM units are unlocked.
2. Reseat the memory modules, and then restart the solution.
3. Check the POST error log:
   - If a memory module was disabled by a systems-management interrupt (SMI), replace the memory module.
   - If a memory module was disabled by the user or by POST, reseat the memory module; then, run the Setup utility and enable the memory module.
4. Run memory diagnostics. Power on the system and press **F1** when the logo screen appears, the Lenovo XClarity Provisioning Manager interface will start. Perform memory diagnostics with this interface. Go to **Diagnostics → Run Diagnostic → Memory test** or **DCPMM test**.

   When DCPMMs are installed, run diagnostics based on the current DCPMM mode:
   - App Direct Mode
     - Run **DCPMM Test** for DCPMMs.
     - Run **Memory Test** for DRAM DIMMs.
   - Memory Mode and Mixed Memory Mode
     - Run **DCPMM Test** for App Direct capacity of DCPMMs.
     - Run **Memory Test** for memory capacity of DCPMMs.

Note: DRAM DIMMs in these two modes act as cache, and are not applicable to memory diagnostics.

5. Reverse the modules between the channels (of the same processor), and then restart the solution. If the problem is related to a memory module, replace the failing memory module.

   Note: When DCPMMs are installed, only adopt this method in Memory Mode.

6. Re-enable all memory modules using the Setup Utility, and restart the system.
7. (Trained technician only) Install the failing memory module into a memory module connector for processor 2 (if installed) to verify that the problem is not the processor or the memory module connector.
8. (Trained technician only) Replace the node.

A Lenovo optional device that was just installed does not work.

1. Make sure that:
   - The device is supported for the server (see https://static.lenovo.com/us/en/serverproven/index.shtml).
   - You followed the installation instructions that came with the device and the device is installed correctly.
   - You have not loosened any other installed devices or cables.
   - You updated the configuration information in system setup. When you start a server and press F1 to display the system setup interface. Whenever memory or any other device is changed, you must update the configuration.
2. Reseat the device that you just installed.
3. Replace the device that you just installed.

Voltage planar fault is displayed in the event log

Complete the following steps until the problem is solved.

1. Revert the system to the minimum configuration. See “Specifications” on page 5 for the minimally required number of processors and DIMMs.
2. Restart the system.
   - If the system restarts, add each of the items that you removed one at a time, restarting the system each time, until the error occurs. Replace the item for which the error occurs.
   - If the system does not restart, suspect the system board.

Appendix A. Getting help and technical assistance

If you need help, service, or technical assistance or just want more information about Lenovo products, you will find a wide variety of sources available from Lenovo to assist you.

On the World Wide Web, up-to-date information about Lenovo systems, optional devices, services, and support are available at:

http://datacentersupport.lenovo.com

Note: IBM is Lenovo's preferred service provider for ThinkSystem.

Before you call

Before you call, there are several steps that you can take to try and solve the problem yourself. If you decide that you do need to call for assistance, gather the information that will be needed by the service technician to more quickly resolve your problem.

Attempt to resolve the problem yourself

You can solve many problems without outside assistance by following the troubleshooting procedures that Lenovo provides in the online help or in the Lenovo product documentation. The Lenovo product documentation also describes the diagnostic tests that you can perform. The documentation for most systems, operating systems, and programs contains troubleshooting procedures and explanations of error messages and error codes. If you suspect a software problem, see the documentation for the operating system or program.

You can find the product documentation for your ThinkSystem products at the following location:

http://thinksystem.lenovofiles.com/help/index.jsp

You can take these steps to try to solve the problem yourself:

- Check all cables to make sure that they are connected.
- Check the power switches to make sure that the system and any optional devices are turned on.
- Check for updated software, firmware, and operating-system device drivers for your Lenovo product. The Lenovo Warranty terms and conditions state that you, the owner of the Lenovo product, are responsible for maintaining and updating all software and firmware for the product (unless it is covered by an additional maintenance contract). Your service technician will request that you upgrade your software and firmware if the problem has a documented solution within a software upgrade.
- If you have installed new hardware or software in your environment, check https://static.lenovo.com/us/en/serverproven/index.shtml to make sure that the hardware and software is supported by your product.
- Go to http://datacentersupport.lenovo.com and check for information to help you solve the problem.
  - Check the Lenovo forums at https://forums.lenovo.com/t5/Datacenter-Systems/ct-p/sv_eg to see if someone else has encountered a similar problem.

Gathering information needed to call Support

If you believe that you require warranty service for your Lenovo product, the service technicians will be able to assist you more efficiently if you prepare before you call. You can also see http://datacentersupport.lenovo.com/warrantylookup for more information about your product warranty.

© Copyright Lenovo 2017, 2021

Gather the following information to provide to the service technician. This data will help the service technician quickly provide a solution to your problem and ensure that you receive the level of service for which you might have contracted.

- Hardware and Software Maintenance agreement contract numbers, if applicable
- Machine type number (Lenovo 4-digit machine identifier)
- Model number
- Serial number
- Current system UEFI and firmware levels
- Other pertinent information such as error messages and logs

As an alternative to calling Lenovo Support, you can go to https://support.lenovo.com/servicerequest to submit an Electronic Service Request. Submitting an Electronic Service Request will start the process of determining a solution to your problem by making the pertinent information available to the service technicians. The Lenovo service technicians can start working on your solution as soon as you have completed and submitted an Electronic Service Request.

Collecting service data

To clearly identify the root cause of a server issue or at the request of Lenovo Support, you might need collect service data that can be used for further analysis. Service data includes information such as event logs and hardware inventory.

Service data can be collected through the following tools:

- **Lenovo XClarity Provisioning Manager**

  Use the Collect Service Data function of Lenovo XClarity Provisioning Manager to collect system service data. You can collect existing system log data or run a new diagnostic to collect new data.

- **Lenovo XClarity Controller**

  You can use the Lenovo XClarity Controller web interface or the CLI to collect service data for the server. The file can be saved and sent to Lenovo Support.

  - For more information about using the web interface to collect service data, see http://sysmgt.lenovofiles.com/help/topic/com.lenovo.systems.management.xcc.doc/NN1ia_c_servicesandsupport.html.
  - For more information about using the CLI to collect service data, see http://sysmgt.lenovofiles.com/help/topic/com.lenovo.systems.management.xcc.doc/nn1ia_r_ffdccommand.html.

- **Lenovo XClarity Administrator**

  Lenovo XClarity Administrator can be set up to collect and send diagnostic files automatically to Lenovo Support when certain serviceable events occur in Lenovo XClarity Administrator and the managed endpoints. You can choose to send diagnostic files to Lenovo Support using Call Home or to another service provider using SFTP. You can also manually collect diagnostic files, open a problem record, and send diagnostic files to the Lenovo Support Center.

  You can find more information about setting up automatic problem notification within the Lenovo XClarity Administrator at http://sysmgt.lenovofiles.com/help/topic/com.lenovo.lxca.doc/admin_setupcallhome.html.

- **Lenovo XClarity Essentials OneCLI**

  Lenovo XClarity Essentials OneCLI has inventory application to collect service data. It can run both in-band and out-of-band. When running in-band within the host operating system on the server, OneCLI can collect information about the operating system, such as the operating system event log, in addition to the hardware service data.

To obtain service data, you can run the `getinfor` command. For more information about running the `getinfor`, see http://sysmgt.lenovofiles.com/help/topic/toolsctr_cli_lenovo/onecli_r_getinfor_command.html.

Contacting Support

You can contact Support to obtain help for your issue.

You can receive hardware service through a Lenovo Authorized Service Provider. To locate a service provider authorized by Lenovo to provide warranty service, go to https://datacentersupport.lenovo.com/serviceprovider and use filter searching for different countries. For Lenovo support telephone numbers, see https://datacentersupport.lenovo.com/supportphonelist for your region support details.

Appendix B. Trademarks

LENOVO and THINKSYSTEM are trademarks of Lenovo. Intel and Xeon are trademarks of Intel Corporation in the United States, other countries, or both. Microsoft and Windows are trademarks of the Microsoft group of companies. Linux is a registered trademark of Linus Torvalds. All other trademarks are the property of their respective owners. © 2021 Lenovo.

© Copyright Lenovo 2017, 2021

Index

2.5-inch-drive backplane
  installing 79
3.5-inch-drive backplane
  installing 81

A

air baffle
  installing 104
  removing 62

B

back up the server configuration 126
bezel
  removing 59

C

cable routing
  backplane 36
  eight 2.5-inch drives 37
  eight 3.5-inch drives 44
  front I/O assembly 34
  sixteen 2.5-inch drives 40
  twelve 3.5-inch drives 46
  VGA connector 33
cable the server 113
collecting service data 136
Common installation issues 131
Configuration - ThinkSystem SR590 115
configure the firmware 119
contamination, particulate and gaseous 11
cover
  installing 107
  removing 60
CPU
  option install 64
creating a personalized support web page 135
custom support web page 135

D

DCPMM 68–69, 121
DCPMM installation rules 75
DCPMM installation rules-App Direct mode 75
DCPMM installation rules-Memory Mode 78
DCPMM installation rules-Mixed memory mode 76
devices, static-sensitive
  handling 58
DIMM installation rules 71
DIMM installation rules - Rank sparing mode 73
DIMM installation rules-Independent mode 72
DIMM installation rules-Mirroring mode 73

F

fan
  installing 98
features 3
front I/O assembly 20
front view 17

G

gaseous contamination 11
Getting help 135
guidelines
  options installation 56
  system reliability 58

H

handling static-sensitive devices 58
hardware options
  installing 59
hardware service and support telephone numbers 137
help 135
hot-swap power supply
  installing 100

I

ID label 1
install server in a rack 113
installation
  guidelines 56
installation guidelines 56
installing
  2.5-inch-drive backplane 79
  3.5-inch-drive backplane 81
  air baffle 104
  hot-swap power supply 100
  LOM adapter 95
  M.2 backplane and M.2 drive 85
  memory module 66
  PCIe card 89
  RAID super capacitor module 105
  rear hot-swap drive assembly 83
  serial port module 96
  system fan 98
  system fan cage 97
  top cover 107
Intel Optane DC Persistent Memory Module 68–69
internal cable routing 32
introduction 1

L

Lenovo Capacity Planner 12
Lenovo XClarity Essentials 12
Lenovo XClarity Provisioning Manager 12
LOM adapter
  installing 95

M

M.2 backplane and M.2 drive
  installing 85
management options 12
memory 68–69, 121
memory configuration 120–121, 125
memory module
  installing 66
memory modules installation rules 70
microprocessor

© Copyright Lenovo 2017, 2021

option install 64

N

network access label 1
network activity LED 20

O

option install
CPU 64
microprocessor 64
PHM 64
processor 64
processor-heat-sink module 64

P

package contents 3
particulate contamination 11
parts list 50
PCIe card
installing 89
PHM
option install 64
power button 20
power cords 53
power off the server 113
power on the server 113
power status LED 20
processor
option install 64
processor-heat-sink module
option install 64

Q

QR code 1

R

RAID super capacitor module
installing 105
rear hot-swap drive assembly
installing 83
rear view 24
rear view LEDs 26
removing
air baffle 62
security bezel 59
system fan cage 63
top cover 60
retainer on M.2 backplane
adjusting 88

S

safety inspection checklist 57
security bezel
removing 59
serial port module
installing 96
server components 17
server setup 55
server setup checklist 55
service and support
before you call 135
hardware 137
software 137
service data 136
software service and support telephone numbers 137
static-sensitive devices
handling 58
support web page, custom 135
system board components 29
system board LED 31
System configuration - ThinkSystem SR590 115
system error LED 20
system fan
installing 98
system fan cage
installing 97
removing 63
system ID button 20
system ID LED 20
system reliability guidelines 58

T

telephone numbers 137
top cover
installing 107
removing 60
trademarks 139

U

update the firmware 116
updating
asset tag 128
Universal Unique Identifier (UUID) 127
Update the Vital Product Data (VPD) 126

V

validate server setup 113

W

warranty 1
working inside the server
power on 58

