DYNATRON

The Thermal Solution Architect

WWW.DYNATRON.CO

Product Spec Sheet

B6

Table of Contents

1. Product Description 3

2. Thermal Performance Curve 3

3. DM Drawing 4

4. EP Drawing 5

5. RoHS Certificate.....6

Application :

- Recommend for Intel® Xeon® Platinum /Gold/Silver/Bronze Family Processor (formerly Cascade Lake, Skylake), Socket FCLGA 3647 Square ILM
- Passive Cooler for 1U Server

Overall Specification :

- Dimension: 90 x 90 x 27 mm
- Weight: 420 g
- Material: Copper1100 Stacked Fin Heatsink with Vapor Chamber Base
- Convenient Heat Sink Screw captive mounting
- Thermal Grease Shin-Etsu 7762 or Equivalent
- Support CPU power up to 205 Watts heat dissipation
- Includes Package Carrier for Processor Installation

Passive Cooler B6 Thermal Performance Curve

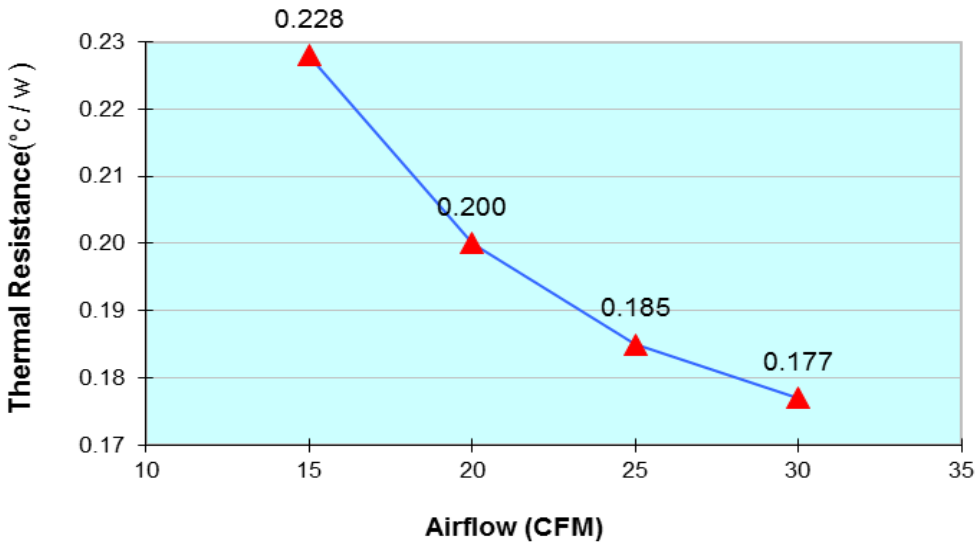

REV#	DESCRIPTION	CHECKER	DATE
0.0	INITIAL RELEASE	LANG	01/04/2017

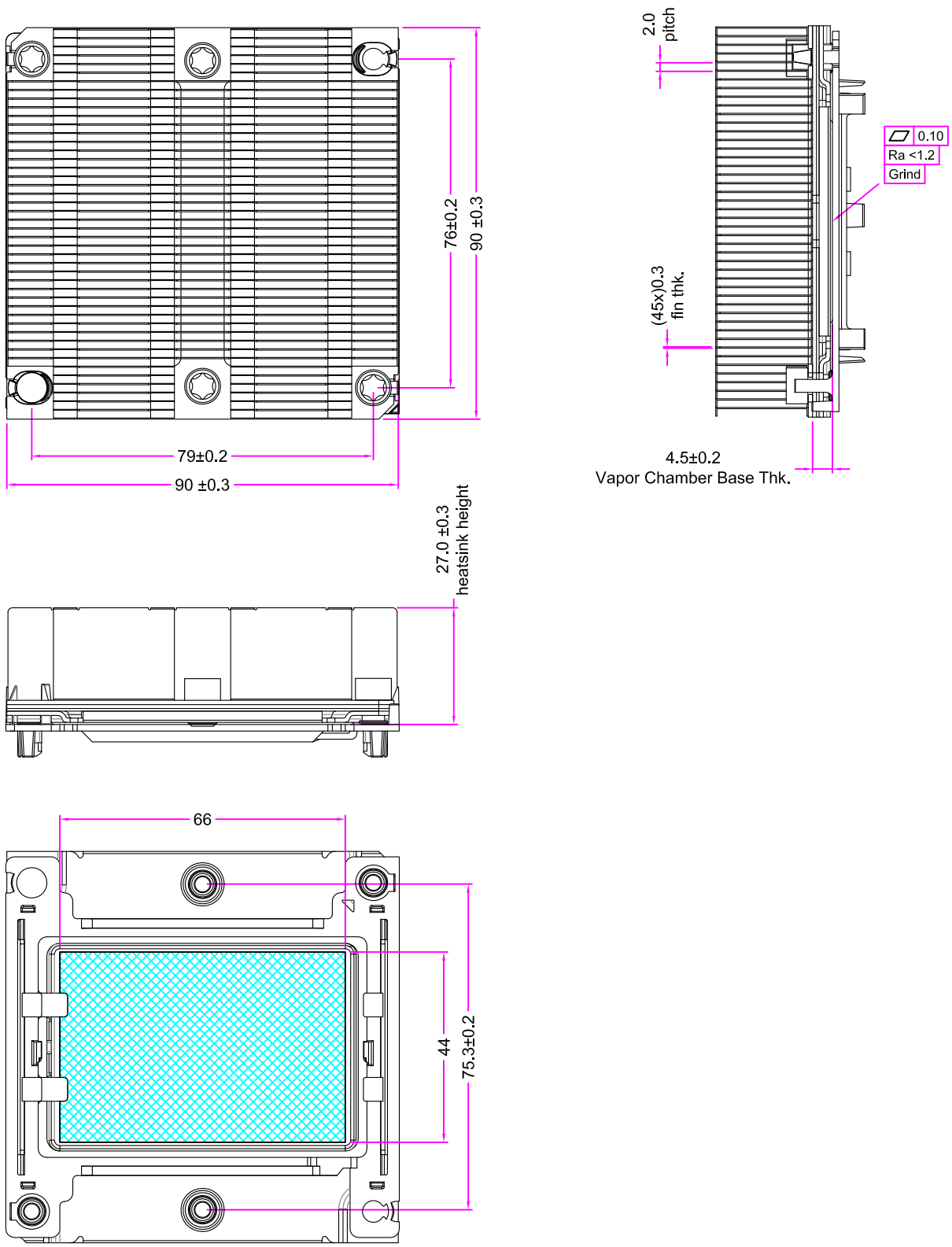

	NAME	DATE
DRAWN BY	engr	01/04/ 2017
CHECKED BY	LANG	01/04/ 2017
ENG.APPROVED		
MFG.APPROVED	-	-

TOP MOTOR®

DYNATRON CORPORATION

TITLE: Passive Cooler **B6**
Overall Dimension Drawing

VIEW

UNITS MM

DWG. No: DYN-DM-B6

REV. 0.0

CONFIDENTIAL DOCUMENT

THIS DRAWING CONTAINS INFORMATION PROPRIETARY TO DYNATRON CORPORATION AND DYNAEON INDUSTRIAL CO., LTD. ANY REPRODUCTION, DISCLOSURE, OR USE OF THIS DRAWING IS EXPRESSLY PROHIBITED EXCEPT AS DYNATRON CORPORATION AND DYNAEON INDUSTRIAL CO., LTD. MAY OTHERWISE AGREE TO IN WRITING.

CONFIDENTIAL DOCUMENT

THIS DRAWING CONTAINS INFORMATION PROPRIETARY TO DYNATRON CORPORATION AND DYNAEON INDUSTRIAL CO., LTD. ANY REPRODUCTION, DISCLOSURE, OR USE OF THIS DRAWING IS EXPRESSLY PROHIBITED EXCEPT AS DYNATRON CORPORATION AND DYNAEON INDUSTRIAL CO., LTD. MAY OTHERWISE AGREE TO IN WRITING.

REV#	DESCRIPTION	CHECKER	DATE
0.0	Initial Release	LANG	01/04/2017

ASSEMBLY PARTS

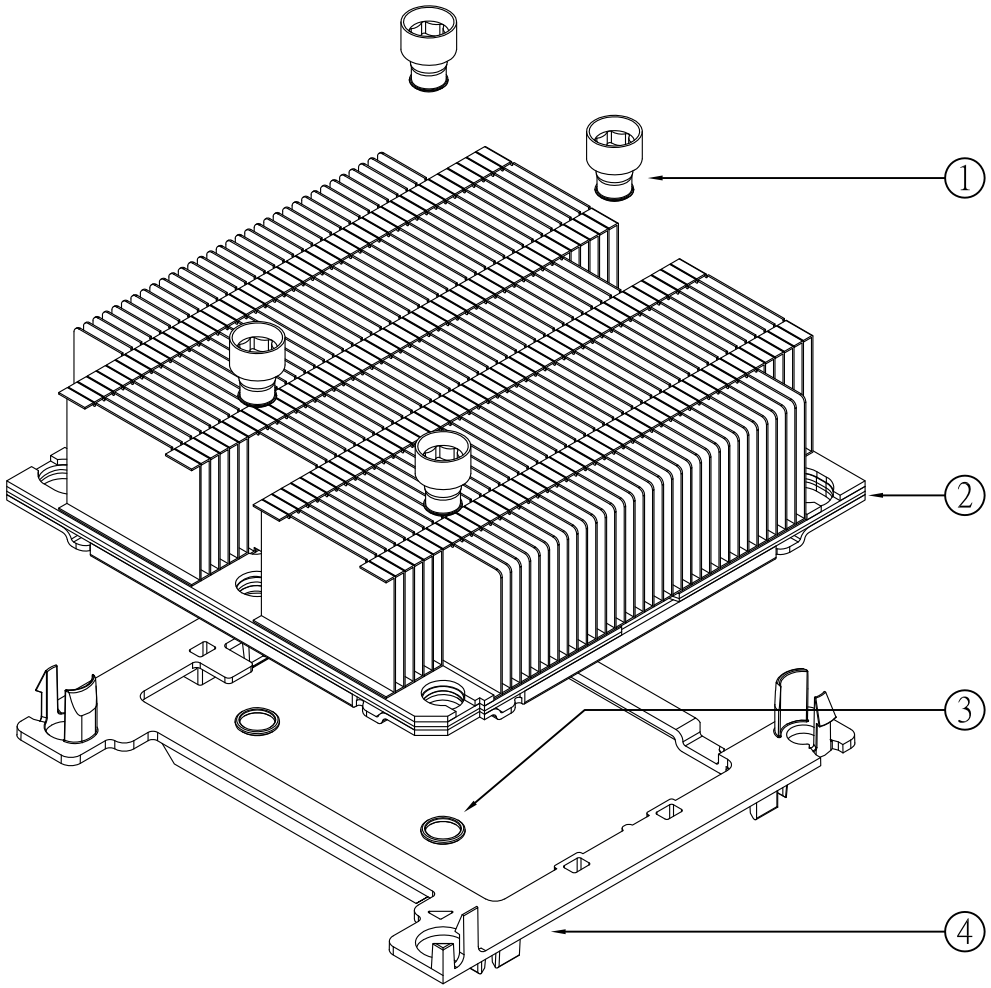

WHOLE SET OF COOLER

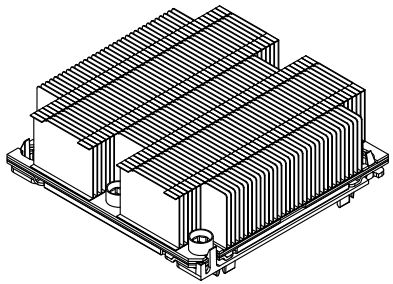

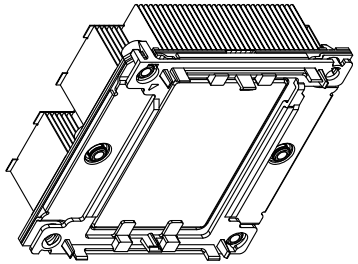

ITEM#	DESCRIPTION	MATERIAL	QTY.
5	THERMAL GREASE, PRE-PRINTED	SHIN-ETSU 7762	1
4	PACKAGE CARRIER	PLASTIC	1
3	CALLAR	PLASTIC	4
2	HEATSINK, STACKED FIN	COPPER 1100 FIN COPPER VC BASE	1
1	HEATSINK NUT, M4	SS316 ANNEALED	4

Notes:

1. The figure is for reference only, and not for scale
2. Overall dimension: 90 x 90 x 27 mm
3. Overall weight 420g

	DATE	NAME
DRAWN	01/04/17	Engr.
CHECKED	01/04/17	Lang
ENG. APPR.		
MFG. APPR.		
Q.A.		
COMMENTS:		

DYNATRON CORPORATION

TITLE:

Passive Cooler **B6**

BOM & Exploded Drawing

DWG. No: DYN-EP-B6

REV 0.0

Certificate of Environment Protection
環保證明書

Customer: 客戶名稱:	***Company:*** _____ ***Address:*** _____ ***Phone Number:*** _____ - _____- _____
Issue Date:	06/02/2017
Product Model Number:	*B6*

Dynatron Corporation hereby declares and certifies that all components manufactured are RoHS compliant according to the definitions and restrictions given by the European Union's Restriction (Directive 2002/95/EC) (Decision2011/65/EU)RoHS 2, on the restriction of the use of certain Hazardous Substances in the electrical and electronic equipment. Also, compliance to the most recent list of substances on the REACH candidate list.

Number of substances on the Candidate List: 168 (last updated: 17/12/2015)

No exemptions are claimed in order for the part to be compliant with the RoHS directive.

Dynatron Corporation / 政久興業股份有限公司證明所有產品,零件 (包括附屬品, 包裝類) 之環境管理物質完全符合 RoHS, WEEE, 及該環保標準之規定, 並承諾遵 循以上之證明.

Dynatron Corporation.
33200 Western Ave,
Union City, CA 94587
www.Dynatron-corp.com

Title (職務): ASSISTANT-MANAGER

Signature (簽字): _____ Date: 06 / 02 / 2017

Document Number: RH_B6-R0