Havis, Inc.
75 Jacksonville Road,
Warminster, PA 18974
T 800-524-9900 F 215-957-0729
www.havis.com

Installation Instructions
C-CUP2 SERIES CUPHOLDERS

TOOLS REQUIRED:

7/16” wrench

Phillips Screwdriver
T-20 Torx Driver

INSTALLATION:

There are four standard installation types, as listed below.
Please follow the instructions applicable to your specific installation:

C-CUP2-I Internal mount for enclosed (non-angled) consoles:

1. The internal-mount cup holder requires 4” inches of mounting space inside console.
2. Select the optimum location for installing the cup holder. Carefully remove any equipment brackets already installed in that location.
3. Using the four (4) Torx screws supplied, attach the cup holder bracket to the console.
4. Replace any necessary equipment brackets to complete installation.
5. Insert Plastic cup holder into bracket.

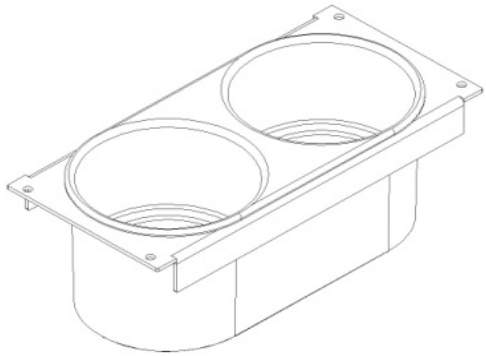

C-CUP2-E-C or C-CUP2-E-AS External mount to rear of console end panel:

1. Remove the top two (2) screws holding the console rear end cap onto the extrusion. Remove the plastic end cap. (note that it may be held with adhesive.)
2. Using the hardware supplied, install the cup holder bracket only.

3. Insert Plastic cup holder into bracket.

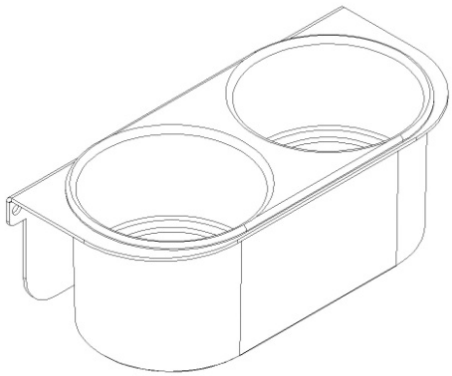

C-CUP2-E-C External Tunnel Mount or any Flat Surface:

C-HK-122 – Additional Hardware Supplied:

QTY	DESCRIPTION	PART NUMBER
2	1/4 x 3/4 Carriage Bolt	GSM32000
2	1/4 x 3/4 HHCS	GSM33001
4	1/4 Nuts	GSM30005
4	1/4 Flat Washer	GSM31005
4	1/4 Lock Washer	GSM31026

1. Remove any equipment from the Tunnel Mount that will interfere with the installation of the new cup holder.
   Note: At least one end of the mount must be fully accessible in order to insert mounting hardware into slots.
2. Attach C-B41 "L" bracket to cup holder bracket with 1/4 x 3/4 Carriage bolts, flat washers, lock washers and nuts. Set height as desired and tighten hardware.
3. Determine location of cup holder bracket assembly on Tunnel Mount extrusion and insert two (2) 1/4 x 3/4 Hex Head bolts at that location. (bolt heads in extrusion slots) Place the cup holder onto the extrusion and attach to bolts with 1/4 flat washers, lock washers and nuts.
4. Insert Plastic cup holder into bracket.
5. The Plastic cup holder can be bolted directly to the extrusion (if desired) with short round head bolts and nuts supplied.
6. Hardware for mounting in other locations is not supplied. It is up to the installer to provide other hardware if needed.

