RoHS COMPLIANT

| REVISION INFORMATION | | | |
|---|---|---|---|
| Rev. | Rev. Date | Modified By | Brief Description |
| | | | |

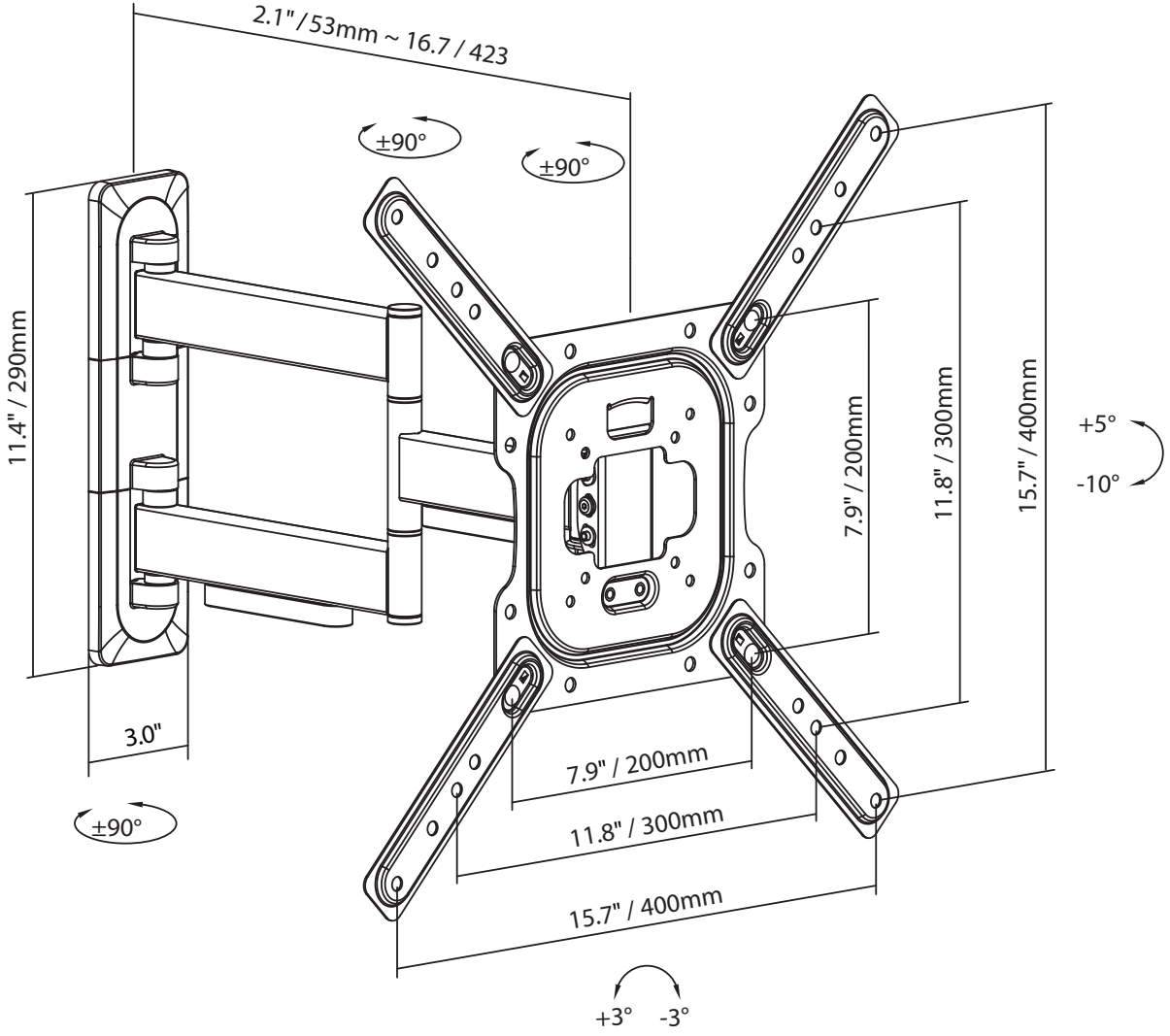


| NO. | PART NAME | SPECIFICATION DESCRIPTION | QT'Y | UNIT |
|---|---|---|---|---|
| ③ | | | | |
| ② | | | | |
| ① | | | | |

MONOPRICE

| GENERAL TOLERANCE | |
|---|---|
| 0-6 | ±0.05 |
| 6-18 | ±0.07 |
| 18-50 | ±0.10 |
| 50-120 | ±0.15 |

APPROVED BY & DATE :

CHECKED BY & DATE :

DESIGNED BY & DATE : 20240703

DESCRIPTION : TV Wall Mount

ITEM NO.: PN 15868 (V2)

| DATE : | REV : | UNIT : | SHEET: | SCALE: |
|---|---|---|---|---|
| | 1 | MM | | |