**CX4-10G-PDAC2M-AO**

MSA Compliant 10GBase-CX CX4 Direct Attach Cable (Passive Twinax, 2m)

**Features:**

- Supports 10Gbps Data Rate
- Operating Temperature: 0 to 70 Celsius
- CX Transceiver Type
- RoHS Compliant and Lead-Free



**Applications:**

- 10GBase Ethernet

**Product Description**

This is an MSA compliant 10GBase-CX CX4 to CX4 direct attach cable that operates over passive copper with a maximum reach of 2.0m (6.6ft). It has been programmed, uniquely serialized, and data-traffic and application tested to ensure it is 100% compliant and functional. This direct attach cable is built to comply with MSA (Multi-Source Agreement) standards. We stand behind the quality of our products and proudly offer a limited lifetime warranty.

AddOn's transceivers are RoHS compliant and lead-free.

## Cable Specifications

| Parameter | Specifications |
|---|---|
| **Conductor** | 28AWG Solid Silver-Plated Copper, 0.320mm Diameter |
| **Insulation** | 0.3048mm of Foam Polyolefin, 0.939mm Diameter, Color - Natural |
| **Pair** | 2 Singles Laid Flat and Parallel |
| **Pair Drain Wire** | 30AWG Solid Silver-Plated Copper |
| **Pair Shield** | Aluminum/Polyester Type, Aluminum Side Facing In, 25% Overlap |
| **Inner Shield** | Aluminum/Polyester Type, Aluminum Side Facing Out, 25% Overlap |
| **Outer Shield** | 38AWG In Plated Copper Braid, 85% Coverage |
| **Diameter** | 7.87mm Nominal |
| **Differential Impedance** | 100 ± 5Ω @ TDR |
| **UL Listing** | Type CL2 as Specified in Article 725 of The National Electrical Code |

## SAS 4x Ejector Type Connector Specifications

| Parameter | Specifications |
|---|---|
| **Main Body** | High-Temperature LCP Resin UL94V-0 |
| **Single & Ground Pin** | Phosphor Bronze/30u. Gold Over Nickel |
| **P.C. Board** | FR4, 4-Layer |
| **Ejection Latch** | Stainless Steel |
| **Back Shell** | Zinc Die Casting/Nickel-Plated |

**Wiring Diagram**

| P1 | | P2 | |
|---|---|---|---|
| **Pin No.** | **Signal** | **Pin No.** | **Signal** |
| **G1-G9** | **Ground** | **G1-G9** | **Ground** |
| **S1** | RX0+ | **S16** | TX0+ |
| **S2** | RX0- | **S15** | TX0- |
| **S3** | RX1+ | **S14** | TX1+ |
| **S4** | RX1- | **S13** | TX1- |
| **S5** | RX2+ | **S12** | TX2+ |
| **S6** | RX2- | **S11** | TX2- |
| **S7** | RX3+ | **S10** | TX3+ |
| **S8** | RX3- | **S9** | TX3- |
| **S9** | TX3- | **S8** | RX3- |
| **S10** | TX3+ | **S7** | RX3+ |
| **S11** | TX2- | **S6** | RX2- |
| **S12** | TX2+ | **S5** | RX2+ |
| **S13** | TX1- | **S4** | RX1- |
| **S14** | TX1+ | **S3** | RX1+ |
| **S15** | TX0- | **S2** | RX0- |
| **S16** | TX0+ | **S1** | RX0+ |
| **Connector Shell** | | **Connector Shell** | |

**Mechanical Specifications**

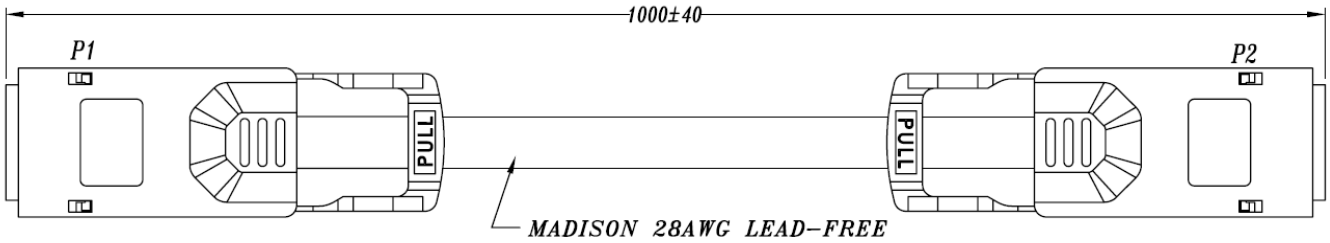


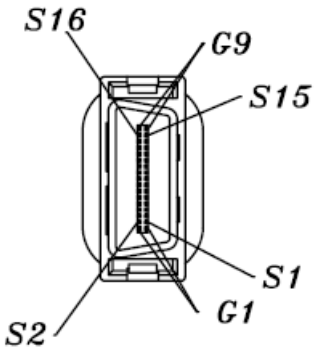

**About AddOn Networks**

In 1999, AddOn Networks entered the market with a single product. Our founders fulfilled a severe shortage for compatible, cost-effective optical transceivers that compete at the same performance levels as leading OEM manufacturers. Adhering to the idea of redefining service and product quality not previously had in the fiber optic networking industry, AddOn invested resources in solution design, production, fulfillment, and global support.

Combining one of the most extensive and stringent testing processes in the industry, an exceptional free tech support center, and a consistent roll-out of innovative technologies, AddOn has continually set industry standards of quality and reliability throughout its history.

Reliability is the cornerstone of any optical fiber network and is ingrained in AddOn's DNA. It has played a key role in nurturing the long-term relationships developed over the years with customers. AddOn remains committed to exceeding industry standards with certifications ranging from NEBS Level 3 to ISO 9001:2015 with every new development while maintaining the signature reliability of its products.




**U.S. Headquarters**

Email: sales@addonnetworks.com

Telephone: +1 877.292.1701

Fax: 949.266.9273

**Europe Headquarters**

Email: salesemea@addonnetworks.com

Telephone: +44 1285 842070