

Overview

This guide provides phone operating instructions and feature descriptions for the Cisco IP Phone multiline models 8941 and 8945. The Cisco Unified IP Phone 8941 has two lines and the 8945 has four lines.

- Physical Description of Cisco Unified IP Phone 8941 and 8945, page 1

Physical Description of Cisco Unified IP Phone 8941 and 8945

Your phone provides quick access to your phone lines, features, and call sessions. The Programmable Feature buttons (Line buttons) are used to view calls on a line or access features such as speed dial or All Calls.



	Name	Description
1	Phone screen	Displays information such as incoming/outgoing call status, directories, line status, phone configuration options, and soft key tabs. Also, shows dedicated phone line label.
2	Video Camera 	Connects to your Cisco Unified IP Phone and allows you to make a point-to-point video call with another Cisco Unified IP Phone.
3	Lens Cover button	Integrated lens cover protects the camera lens.
4	Soft key buttons 	Depending on how your system administrator sets up the phone, enabled soft key options are displayed on your phone screen.
5	Navigation pad and Select button 	The navigation pad allows you to scroll up and down on the phone screen. Allows you to scroll through menus, highlight items, and display speed dials list if you press down when the phone is on-hook. Display phone numbers from your Placed Calls if you press up when the phone is on-hook. The Select button on the center of the Navigation pad allows you to select a highlighted item. The Select button is lit (white) when the phone is in power-save mode.

	Name	Description
6	Conference button 	Initiates the conference call.
7	Hold button 	Places the call on hold.
8	Transfer button 	Transfers active calls to another extension.
9	Redial button 	Redials a call.
10	Dial pad	Functions as traditional telephone keypad and allows you to enter letters, and choose menu items (by entering the item number).
11	Speaker button 	Toggles speaker on and off. When the speakerphone is on, the button is lit. The speakerphone audio path does not change until a new default audio path is selected (for example, by picking up the handset). If external speakers are connected, the Speakerphone button selects them as the default audio path.
12	Hide Video button 	Hides a video from the phone screen during a video call.
13	Mute button 	Toggles mute on and off. When the microphone is muted, the button is lit red.
14	Headset button 	Toggles headset on and off. When the headset is on, the button is lit.
15	Volume button 	Increases or decreases handset, headset, ringer, or speakerphone volume (on hook).
16	Messages button 	Provides access to message (voice mail) system.
17	Application button 	Provides access to phone settings such as call history, user preferences, phone configuration (including administration settings, device configuration, network configuration, and other common configurations), and phone model information.
18	Contacts button 	Provides access to phone directories such as personal directory, corporate directory, or call history.
19	Phone Speaker	Speaker for the phone.

	Name	Description
20	Line buttons 	Depending on configuration, programmable buttons provide access to: • Phone lines and intercom lines (line buttons) • Speed-dial numbers (speed-dial buttons, including the BLF speed-dial features) • Call features (for example, a Privacy button) Buttons light to indicate status: • Amber —Privacy in use, one-way intercom call, or DND active • Green —Active call, answering call or held call on this line • Red —Remote line in use or parked
21	Handset rest	Phone handset rest.

Phone Screen

The way that your system administrator sets up your phone determines what is displayed on your phone screen.

Phone with a Single Line



1	Line label	Displays the line phone information.
2	Header	Displays the date, time, and information (such as phone number) about the selected line. (If you are on a call and highlight the header instead of a call, the soft keys that display are the same as those that display when the phone is idle. This is useful, for example, if you want to access the Forward All or NewCall soft keys while you are on a call.)
3	Session button label (for connected call)	Displays information (such as phone number and duration) about a connected call on the line. The timer counts the call duration in minutes and seconds (MM:SS) until the call exceeds 60 minutes. Then the timer counts hours and minutes (HH:MM).
4	Session button label (for held call)	Displays information (such as phone number and duration) about a held call on the line. Pressing the corresponding session button resumes the held call. The timer counts the call duration in minutes and seconds (MM:SS) until the call exceeds 60 minutes. Then the timer counts hours and minutes (HH:MM).
5	Soft keys	Soft key options for the selected (highlighted) call only.

		If you select a different call (by pressing a feature button or the Navigation pad, or by answering a ringing call), the soft key options may change.

Phone with Multiple Lines

If you have multiple lines, it is recommended that you use the All Calls button to view all calls on all lines.

If you handle many calls at one time, it is recommended that you use the Answer button to answer the oldest incoming call without having to scroll down the call list and select the call. Consult your system administrator for more information.



1	Primary line label	Displays information about the primary phone line. Look for the blue icon on the line label to see which line is selected. In this case, the primary line is selected and the information displayed is for the primary line only.
2	Header	Displays the date, time, and information (such as phone number) about the selected line. (If you are on a call and highlight the header instead of a call, the soft keys that display are the same as those that display when the phone is idle. This is useful, for example, if you want to access the Forward All or NewCall soft keys while you are on a call.)

3	Session label (with Connected Call icon)	Displays information (such as call status and duration) about a connected call associated with the selected line.
4	Session labels (with Held Call icons)	Display information (such as call status and duration) about held calls associated with the selected line. Calls are displayed on the right side of the phone screen from the oldest (at the top) to the newest. Pressing the Session button next to a Held Call icon resumes the held call for that session.
5	Soft keys	Soft key options for the selected call only. If you select a different call (by pressing a feature button or the Navigation pad, or by answering a ringing call), the soft key options may change.

Power-Save Mode

Depending on how your system administrator sets up your phone, the phone display may go into a power-save mode (the phone screen appears blank and the Select button is lit white).

To turn on the phone display, press any button or pick up the handset.

Phone Connections

This section shows and describes the connectors on your Cisco Unified IP Phone.

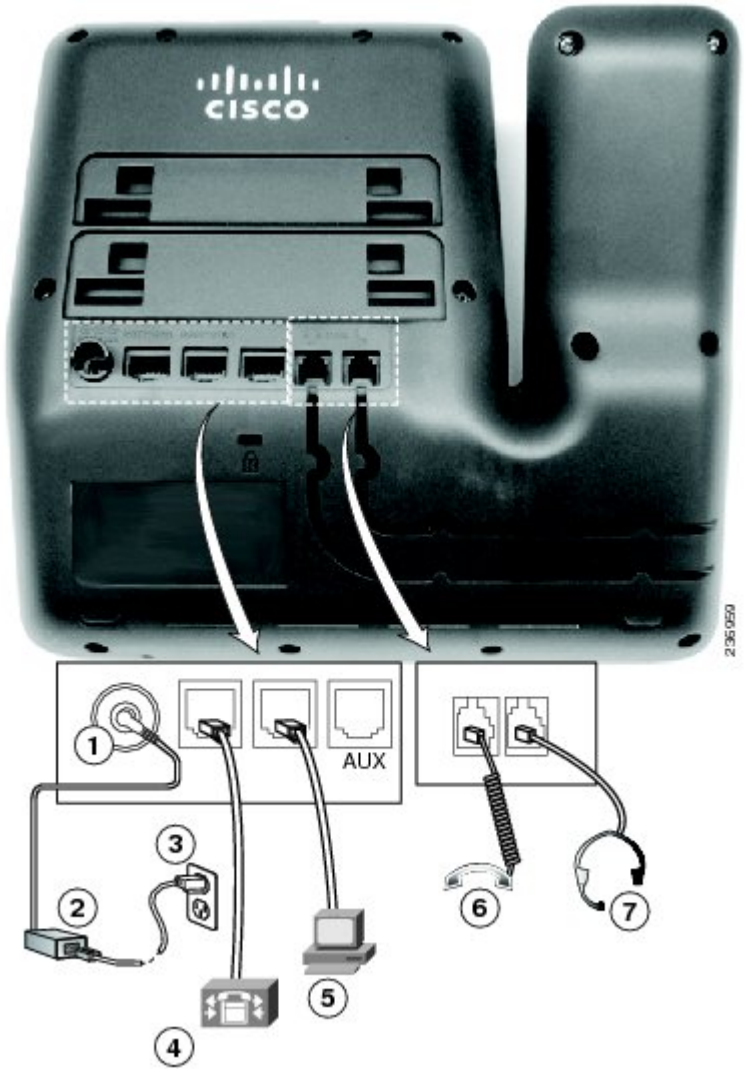

1	DC adapter port (DC48V)	5	Access port (10/100/1000 PC) for connecting your phone to your computer
2	AC-to-DC power supply (optional)	6	Handset port
3	AC power wall plug (optional)	7	Analog headset port (headset optional)
4	Network port (10/100/1000 SW) with IEEE 802.3af and 802.3at power enabled		

Footstand

If your phone is placed on a table or desk, the footstand can be connected to the back of the phone for a higher or lower viewing angle, depending on your preference.

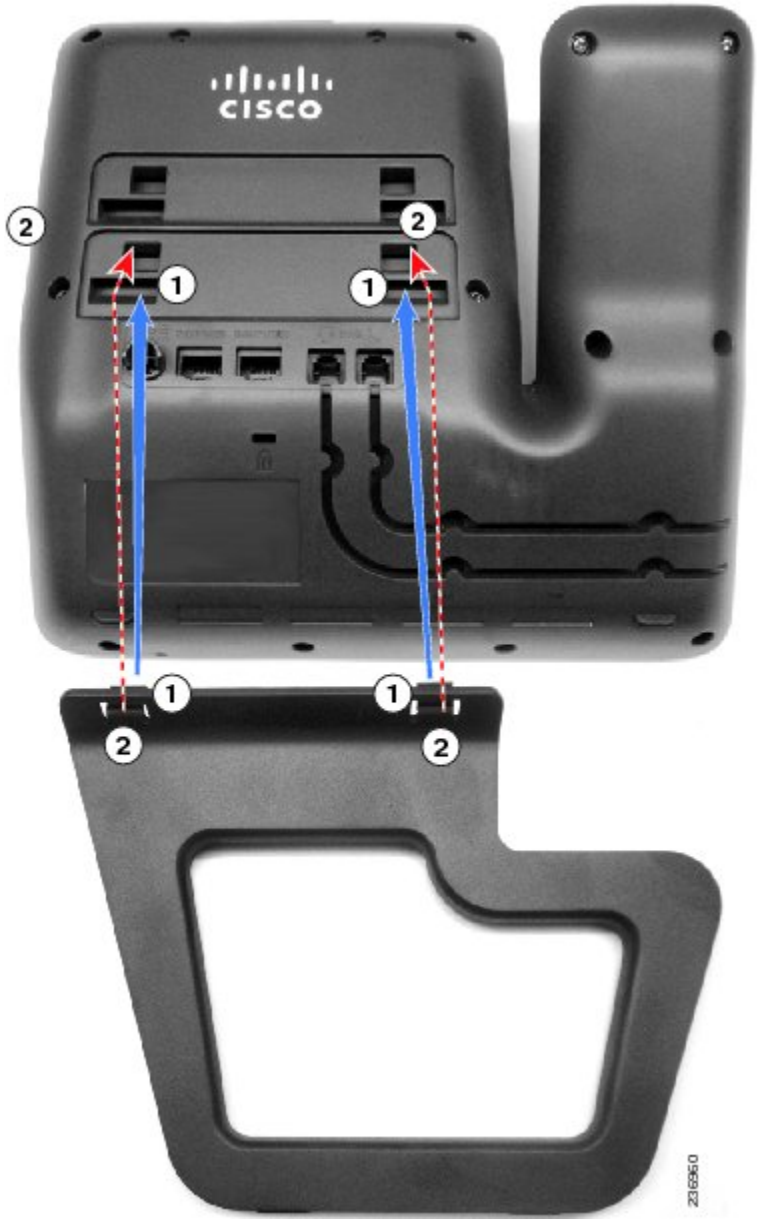

1	Insert the curved connectors into the lower slots.	2	Lift the footstand until the connectors snap into the upper slots.

Note Connecting and disconnecting the footstand may require a little more force than you expect.

Adjusting the Handset Rest

You can adjust the handset rest of a wall-mounted phone so that the receiver does not slip out of the cradle.

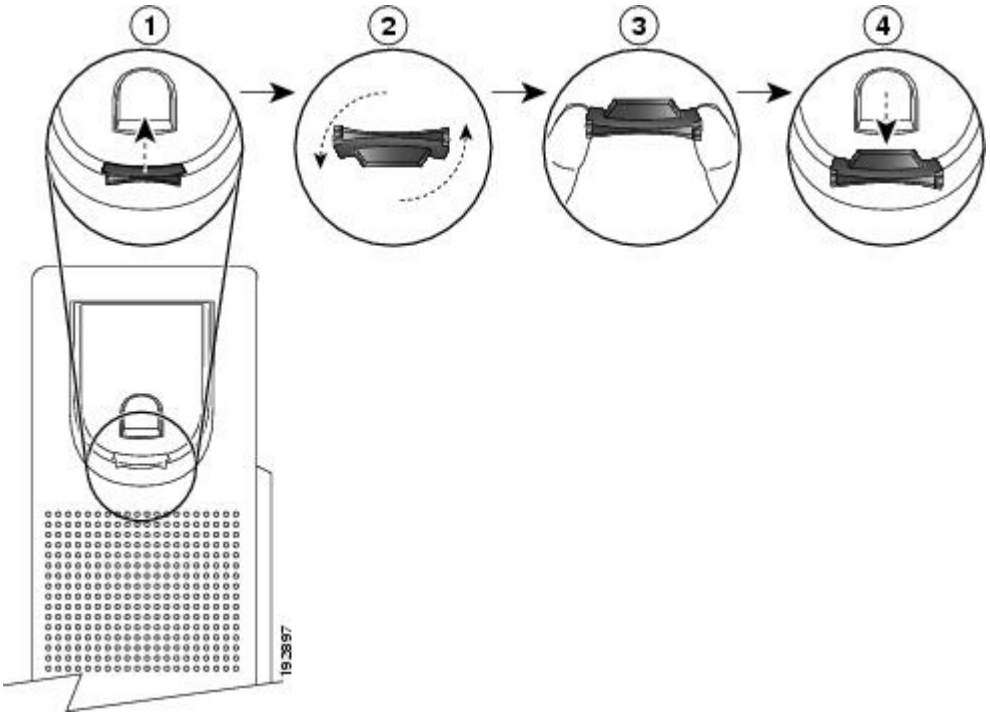

Procedure

Step 1 Set the handset aside and pull the square plastic tab from the handset rest.

Step 2 Rotate the tab halfway (180 degrees).

Step 3 Hold the tab between two fingers, with the small notches (in the corners) facing you.

Step 4 Make sure the tab lines up evenly with the slot in the cradle.

Step 5 Slide the tab back into the handset rest. An extension protrudes from the top of the rotated tab. Return the handset to the handset rest.