FC95700030-AO

Fujitsu® FC95700030 Compatible OC-3-LR SFP Transceiver (SMF, 1310nm, 40km, LC, -40 to 85C)

Features

- INF-8074 and SFF-8472 Compliance
- Duplex LC Connector
- Industrial Temperature -40 to 85 Celsius
- Single-mode Fiber
- Hot Pluggable
- Excellent ESD Protection
- Metal with Lower EMI
- RoHS Compliant and Lead Free



Applications

- 100Base Ethernet
- Access and Enterprise

Product Description

This Fujitsu® FC95700030 compatible SFP transceiver provides OC-3 (155mbs) transmission rates for up to 40km over single-mode fiber (SMF) using a wavelength of 1310nm via an LC connector. It is guaranteed to be 100% compatible with the equivalent Fujitsu® transceiver. This easy to install, hot swappable transceiver has been programmed, uniquely serialized and data-traffic and application tested to ensure that it will initialize and perform identically. It is built to meet or exceed the specifications of Fujitsu®, as well as to comply with MSA (Multi-Source Agreement) standards to ensure seamless network integration. This transceiver is Trade Agreements Act (TAA) compliant. We stand behind the quality of our products and proudly offer a limited lifetime warranty.

AddOn's transceivers are RoHS compliant and lead-free.

TAA refers to the Trade Agreements Act (19 U.S.C. & 2501-2581), which is intended to foster fair and open international trade. TAA requires that the U.S. Government may acquire only "U.S. – made or designated country end products."

TAA COMPLIANT

Rev. 030722

Regulatory Compliance

- ESD to the Electrical PINs: compatible with MIL-STD-883 Method 3015.
- ESD to the Duplex LC Receptacle: compatible with IEC 61000-4-2.
- Immunity compatible with IEC 61000-4-3.
- EMI compatible with FCC Part 15 Class B EN55022 Class B (CISPR 22B) VCCI Class B.
- Laser Eye Safety compatible with FDA 21CFR 1040.10 and 1040.11 EN60950, EN (IEC) 60825-1,2.
- RoHs compliant with 2002/95/EC 4.1&4.2 2005/747/EC.

Absolute Maximum Ratings

Parameter	Symbol	Min.	Typ.	Max.	Unit
Maximum Supply Voltage	Vcc	-0.5		4.0	V
Storage Temperature	TS	-40		85	°C
Operating Humidity	RH	5		85	%
Operating Case Temperature	Tc	-40		85	°C
Data Rate			100/155		Mbps

Electrical Characteristics (TOP=25°C, Vcc=3.3V)

Parameter	Symbol	Min.	Typ.	Max.	Unit	Notes
Power Supply Voltage	Vcc	3.15	3.3	3.45	V	
Power Supply Current	Icc			300	mA	
Transmitter						
Input differential impedance	Zin	85	100	120	Ω	1
LVPECL Inputs (Differential)	Vin	400		2000	mVpp	2
Receiver						
Output Differential Impedance	Zout	85	100	120	Ω	
LVPECL Outputs (Differential)	Vout	400		2000	mVpp	2

Notes:

1. Rin > 100 kohms @ DC
2. AC coupled.

Optical Characteristics

Parameter	Symbol	Min.	Typ.	Max.	Unit	Notes
Transmitter						
Average Output Power	PO	-5		0	dBm	1
Optical Wavelength	λ	1275	1310	1350	nm	
Spectral Width (RMS)	Δλ			3	nm	
Optical Rise/Fall Time	tr/tf			2	ns	2
Extinction Ratio	ER	10			dB	3
Output Optical Eye		IUT-T G.957 Compliant				
Receiver						
Receiver Sensitivity	Pmin			-34.5	dBm	4
Receiver Overload	Pmax	0			dBm	
Optical Center Wavelength	λC	1270		1600	nm	
LOS De-Assert	LOSD			-35	dBm	
LOS Assert	LOSA	-45			dBm	
LOS Hysteresis		1			dB	

Notes:

1. Internally AC coupled.
2. 20%-80%
3. Filtered, measured with a PRBS 2^{23}-1 test pattern @155Mbps.
4. Minimum average optical power is measured at BER less than 1E-12, with 2^{23}-1 PRBS and ER=9 dB

Pin Descriptions

Pin	Symbol	Name/Descriptions	Ref.
1	VeeT	Transmitter Ground (Common with Receiver Ground)	1
2	TX Fault	Transmitter Fault.	
3	TX Disable	Transmitter Disable. Laser output disabled on high or open.	2
4	MOD DEF (2)	Module Definition 2. Data line for Serial ID.	3
5	MOD_DEF (1)	Module Definition 1. Clock line for Serial ID.	3
6	MOD_DEF (0)	Module Definition 0. Grounded within the module.	3
7	Rate Select	No connection required.	
8	LOS	Loss of Signal indication. Logic 0 indicates normal operation.	4
9	VeeR	Receiver Ground (Common with Transmitter Ground)	1
10	VeeR	Receiver Ground (Common with Transmitter Ground)	1
11	VeeR	Receiver Ground (Common with Transmitter Ground)	1
12	RD-	Receiver Inverted DATA out. AC Coupled.	
13	RD+	Receiver Non-inverted DATA out. AC Coupled.	
14	VeeR	Receiver Ground (Common with Transmitter Ground)	1
15	VccR	Receiver Power Supply.	
16	VccT	Transmitter Power Supply.	
17	VeeT	Transmitter Ground (Common with Receiver Ground)	1
18	TD+	Transmitter Non-Inverted DATA in. AC Coupled.	
19	TD-	Transmitter Inverted DATA in. AC Coupled.	
20	VeeT	Transmitter Ground (Common with Receiver Ground)	1

Notes:

1. Circuit ground is internally isolated from chassis ground.
2. Laser output disabled on TX Disable >2.0V or open, enabled on TX Disable <0.8V.
3. Should be pulled up with 4.7k-10kohms on host board to a voltage between 2.0V and 3.6V. MOD_DEF (0) pulls line low to indicate module is plugged in.
4. LOS is open collector output. Should be pulled up with 4.7k-10kohms on host board to a voltage between 2.0V and 3.6V. Logic 0 indicates normal operation; logic 1 indicates loss of signal.

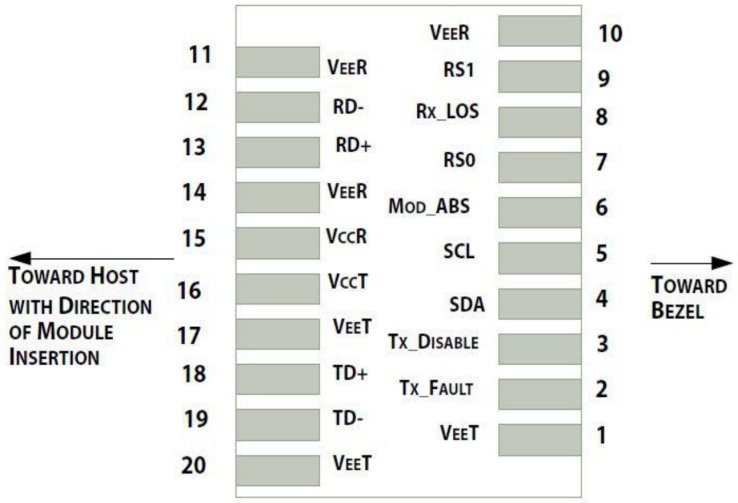

Pin-out of connector Block on Host board

Recommended Circuit Schematic

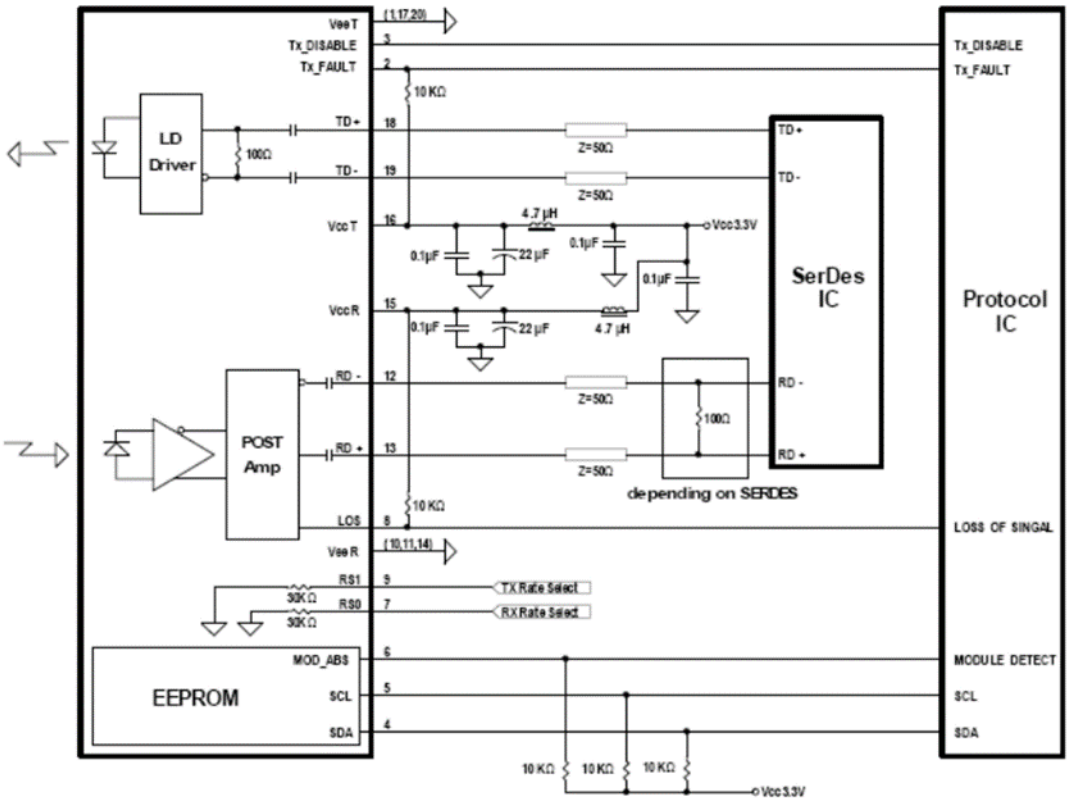

Mechanical Specifications

Small Form Factor Pluggable (SFP) transceivers are compatible with the dimensions defined by the SFP Multi-Sourcing Agreement (MSA).

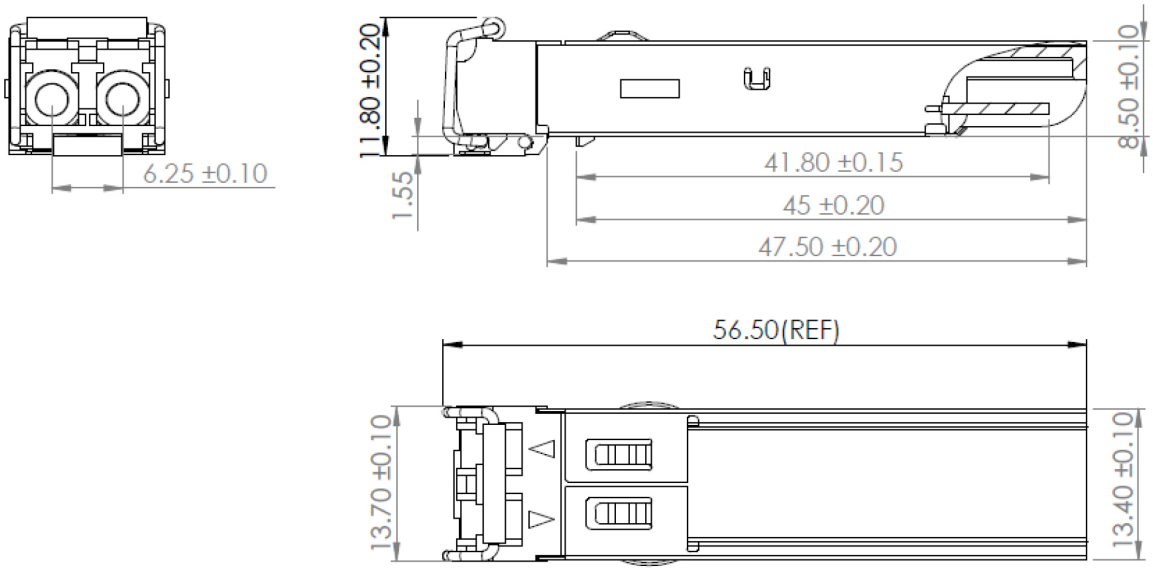

EEPROM Information

EEPROM memory map specific data field description is as below:

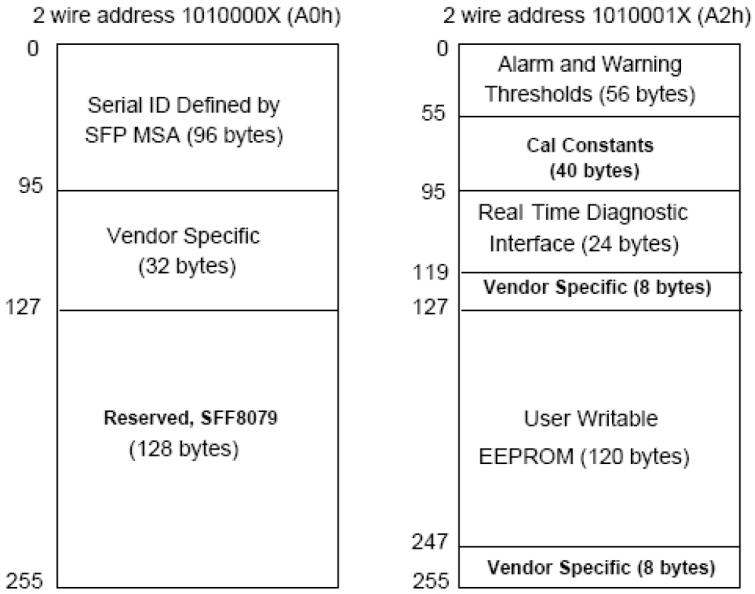

About AddOn Networks

In 1999, AddOn Networks entered the market with a single product. Our founders fulfilled a severe shortage for compatible, cost-effective optical transceivers that compete at the same performance levels as leading OEM manufacturers. Adhering to the idea of redefining service and product quality not previously had in the fiber optic networking industry, AddOn invested resources in solution design, production, fulfillment, and global support.

Combining one of the most extensive and stringent testing processes in the industry, an exceptional free tech support center, and a consistent roll-out of innovative technologies, AddOn has continually set industry standards of quality and reliability throughout its history.

Reliability is the cornerstone of any optical fiber network and is in engrained in AddOn's DNA. It has played a key role in nurturing the long-term relationships developed over the years with customers. AddOn remains committed to exceeding industry standards with certifications from ranging from NEBS Level 3 to ISO 9001:2005 with every new development while maintaining the signature reliability of its products.

U.S. Headquarters

Email: sales@addonnetworks.com

Telephone: +1 877.292.1701

Fax: 949.266.9273

Europe Headquarters

Email: salessupportemea@addonnetworks.com

Telephone: +44 1285 842070