CX4-10G-PDAC7M-AO

MSA Compliant 10GBase-CX CX4 Direct Attach Cable (Passive Twinax, 7m)

Features:

- Supports 10Gbps Data Rate
- Operating Temperature: 0 to 70 Celsius
- CX Transceiver Type
- RoHS Compliant and Lead-Free



Applications:

- 10GBase Ethernet

Product Description

This is an MSA compliant 10GBase-CX CX4 to CX4 direct attach cable that operates over passive copper with a maximum reach of 7.0m (23.0ft). It has been programmed, uniquely serialized, and data-traffic and application tested to ensure it is 100% compliant and functional. This direct attach cable is built to comply with MSA (Multi-Source Agreement) standards. We stand behind the quality of our products and proudly offer a limited lifetime warranty.

AddOn's transceivers are RoHS compliant and lead-free.

Cable Specifications

Parameter	Specifications
Conductor	28AWG Solid Silver-Plated Copper, 0.320mm Diameter
Insulation	0.3048mm of Foam Polyolefin, 0.939mm Diameter, Color - Natural
Pair	2 Singles Laid Flat and Parallel
Pair Drain Wire	30AWG Solid Silver-Plated Copper
Pair Shield	Aluminum/Polyester Type, Aluminum Side Facing In, 25% Overlap
Inner Shield	Aluminum/Polyester Type, Aluminum Side Facing Out, 25% Overlap
Outer Shield	38AWG In Plated Copper Braid, 85% Coverage
Diameter	7.87mm Nominal
Differential Impedance	100 ± 5Ω @ TDR
UL Listing	Type CL2 as Specified in Article 725 of The National Electrical Code

SAS 4x Ejector Type Connector Specifications

Parameter	Specifications
Main Body	High-Temperature LCP Resin UL94V-0
Single & Ground Pin	Phosphor Bronze/30u. Gold Over Nickel
P.C. Board	FR4, 4-Layer
Ejection Latch	Stainless Steel
Back Shell	Zinc Die Casting/Nickel-Plated

Wiring Diagram

P1		P2	
Pin No.	**Signal**	**Pin No.**	**Signal**
G1-G9	**Ground**	**G1-G9**	**Ground**
S1	RX0+	**S16**	TX0+
S2	RX0-	**S15**	TX0-
S3	RX1+	**S14**	TX1+
S4	RX1-	**S13**	TX1-
S5	RX2+	**S12**	TX2+
S6	RX2-	**S11**	TX2-
S7	RX3+	**S10**	TX3+
S8	RX3-	**S9**	TX3-
S9	TX3-	**S8**	RX3-
S10	TX3+	**S7**	RX3+
S11	TX2-	**S6**	RX2-
S12	TX2+	**S5**	RX2+
S13	TX1-	**S4**	RX1-
S14	TX1+	**S3**	RX1+
S15	TX0-	**S2**	RX0-
S16	TX0+	**S1**	RX0+
Connector Shell		**Connector Shell**	

Mechanical Specifications

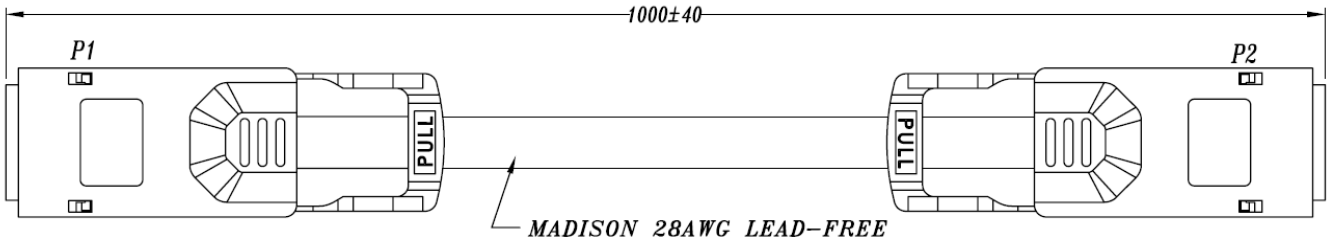

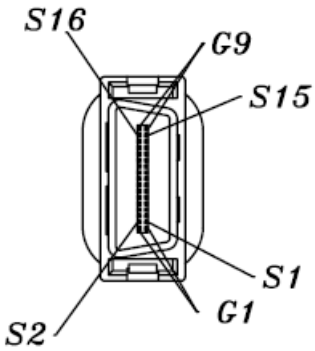

About AddOn Networks

In 1999, AddOn Networks entered the market with a single product. Our founders fulfilled a severe shortage for compatible, cost-effective optical transceivers that compete at the same performance levels as leading OEM manufacturers. Adhering to the idea of redefining service and product quality not previously had in the fiber optic networking industry, AddOn invested resources in solution design, production, fulfillment, and global support.

Combining one of the most extensive and stringent testing processes in the industry, an exceptional free tech support center, and a consistent roll-out of innovative technologies, AddOn has continually set industry standards of quality and reliability throughout its history.

Reliability is the cornerstone of any optical fiber network and is ingrained in AddOn's DNA. It has played a key role in nurturing the long-term relationships developed over the years with customers. AddOn remains committed to exceeding industry standards with certifications ranging from NEBS Level 3 to ISO 9001:2015 with every new development while maintaining the signature reliability of its products.



U.S. Headquarters

Email: sales@addonnetworks.com

Telephone: +1 877.292.1701

Fax: 949.266.9273

Europe Headquarters

Email: salesemea@addonnetworks.com

Telephone: +44 1285 842070