DGS-712-AO

D-Link® DGS-712 Compatible TAA Compliant 10/100/1000Base-TX SFP Transceiver (Copper, 100m, RJ-45)

Features

- INF-8074 Compliance
- RJ-45 Connector
- Commercial Temperature 0 to 70 Celsius
- Copper Media Type
- Hot Pluggable
- Excellent ESD Protection
- Metal with Lower EMI
- RoHS Compliant and Lead Free

Applications

- 1000Base Ethernet
- Access and Enterprise

Product Description

This D-Link® DGS-712 compatible SFP transceiver provides 10/100/1000Base-TX throughput up to 100m over a copper connection via a RJ-45 connector. This TX module supports 10/100/1000Base auto-negotiation and can be configured to fit your needs. It is guaranteed to be 100% compatible with the equivalent D-Link® transceiver. This easy to install, hot swappable transceiver has been programmed, uniquely serialized and data-traffic and application tested to ensure that it will initialize and perform identically. It is built to meet or exceed the specifications of D-Link®, as well as to comply with MSA (Multi-Source Agreement) standards to ensure seamless network integration. This transceiver is Trade Agreements Act (TAA) compliant. We stand behind the quality of our products and proudly offer a limited lifetime warranty.

AddOn's transceivers are RoHS compliant and lead-free.

TAA refers to the Trade Agreements Act (19 U.S.C. & 2501-2581), which is intended to foster fair and open international trade. TAA requires that the U.S. Government may acquire only "U.S. – made or designated country end products."

Rev. 030823

Absolute Maximum Ratings

Parameter	Symbol	Min.	Typ.	Max.	Unit	Notes
Supply Current	Is		320	375	mA	1
Input Voltage	Vcc	3.13	3.3	3.47	V	2
Maximum Voltage	Vmax			4	V	
Surge Current	Isurge			30	mA	3

Notes:

1. 1.2W max power over full range of voltage and temperature. Power consumption and surge current are higher than the specified values in SFP MSA.
2. Referenced to GND
3. Hot plug above steady state current. Power consumption and surge current are higher than the specified values in SFP MSA.

Recommended Operating Conditions

Parameter	Symbol	Min.	Typ.	Max.	Unit	Notes
Data Rate	BR	10		1000	Mb/sec	3-5
Distance Supported	L			100	m	1
Operating Temperature	Top	0		85	°C	
Storage Temperature	Tsto	-40		85	°C	

Notes:

1. Category 5 UTP. BER <10-12
2. Clock tolerance is +/- 50 ppm
3. By default, the GE-GB-P is a full duplex device in preferred master mode
4. Automatic crossover detection is enabled. External crossover cable is not required
5. 1000Base-T operation requires the host system to have an SGMII interface with no clocks, and the module PHY to be configured per Application Note AN-2036. With a SERDES that does not support SGMII, the module will operate at 1000Base-T only.

Low-Speed Signals

Parameter	Symbol	Min.	Typ.	Max.	Unit	Notes
SFP Output LOW	VOL	0		0.5	V	1
SFP Output High	VOH	Host_Vcc-0.5		Host_Vcc+0.3	V	1
SFP Input LOW	VIL	0		0.8	V	2
SFP Input HIGH	VIH	2		Vcc+0.3	V	2

Notes:

1. 4.7k to 10k pull-up to Host_Vcc, measured at host side of connector
2. 4.7k to 10k pull-up to Vcc, measured at SFP side of connector

High-Speed Signals

Parameter	Symbol	Min.	Typ.	Max.	Unit	Notes
Transmission Line-SFP						
Line Frequency	fL		125		MHz	1
TX Output impedance	Zout, TX		100		Ohm	2
Rx Input Impedance	Zin, RX		100		Ohm	2
Host-SFP						
Single ended data input swing	Vinsing	250		1200	mV	3
Single ended data output swing	Voutsing	350		800	mV	3
Rise/Fall Time	Tr,Tf		175		Psec	4
Tx Input Impedance	Zin		50		Ohm	3
Rx Output Impedance	Zout		50		Ohm	3

Notes:

1. 5-level encoding, per IEEE 802.3
2. Differential, for all Frequencies between 1MHz and 125MHz
3. Single ended
4. 20%-80%

Pin Descriptions

Pin	Symbol	Name/Descriptions	Ref.
1	VeeT	Transmitter Ground (Common with Receiver Ground).	1
2	TX Fault	Transmitter Fault. Not Supported	
3	TDIS	Transmitter Disabled. PHY disabled on high or open	2
4	MOD_DEF(2)	Module Definition 2. Data line for serial ID	3
5	MOD_DEF(1)	Module Definition 1. Clock line for serial ID	3
6	MOD_DEF(0)	Module Definition 0. Grounded within the module	3
7	Rate Select	No connection required	
8	LOS	Loss of Signal indication.	4
9	VeeR	Receiver Ground (common with Transmitter ground)	1
10	VeeR	Receiver Ground (common with Transmitter ground)	1
11	VeeR	Receiver Ground (Common with Transmitter Ground).	1
12	RD-	Receiver Inverted DATA out. AC Coupled.	
13	RD+	Receiver Non-inverted DATA out. AC Coupled.	
14	VeeR	Receiver Ground (Common with Transmitter Ground).	1
15	VccR	Receiver Power Supply.	
16	VccT	Transmitter Power Supply.	
17	VeeT	Transmitter Ground (Common with Receiver Ground).	1
18	TD+	Transmitter Non-Inverted DATA in. AC Coupled.	
19	TD-	Transmitter Inverted DATA in. AC Coupled.	
20	VeeT	Transmitter Ground (Common with Receiver Ground).	1

Notes:

1. Circuit ground is connected to chassis ground
2. PHY disabled on TDIS > 2.0V or open, enabled on TDIS <0.8V
3. Should be pulled up with 4.7k-10k Ohms on host board to a voltage between 2.0V and 3.6V.MOD_DEF (0) pulls line low to indicate module is plugged in.
4. LVTTL compatible with a maximum voltage of 2.5V. Not supported on GE-GB-P

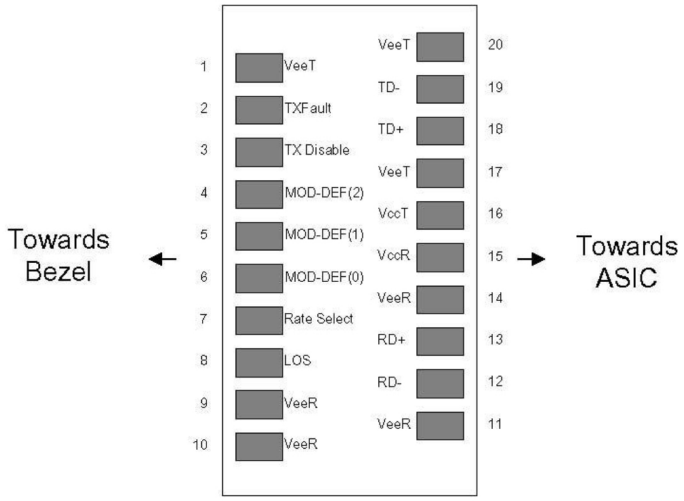

Pin-out of connector Block on Host board

Mechanical Specifications

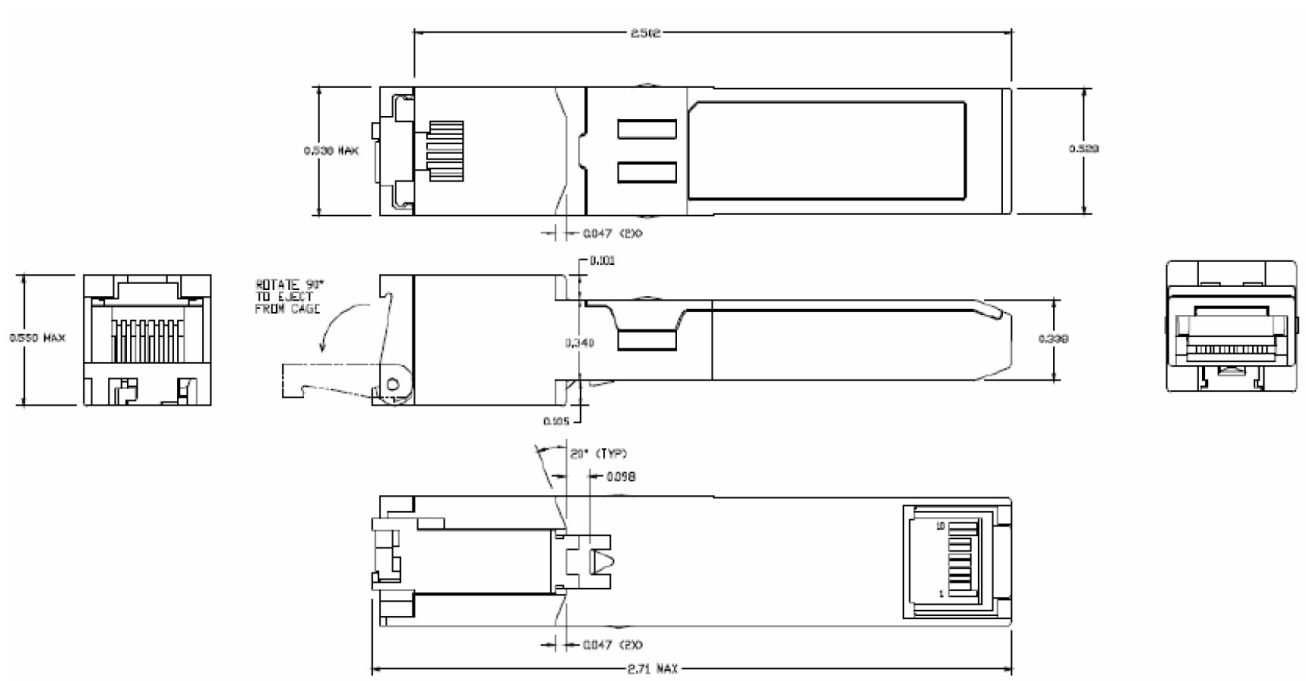

About AddOn Networks

In 1999, AddOn Networks entered the market with a single product. Our founders fulfilled a severe shortage for compatible, cost-effective optical transceivers that compete at the same performance levels as leading OEM manufacturers. Adhering to the idea of redefining service and product quality not previously had in the fiber optic networking industry, AddOn invested resources in solution design, production, fulfillment, and global support.

Combining one of the most extensive and stringent testing processes in the industry, an exceptional free tech support center, and a consistent roll-out of innovative technologies, AddOn has continually set industry standards of quality and reliability throughout its history.

Reliability is the cornerstone of any optical fiber network and is in engrained in AddOn's DNA. It has played a key role in nurturing the long-term relationships developed over the years with customers. AddOn remains committed to exceeding industry standards with certifications from ranging from NEBS Level 3 to ISO 9001:2005 with every new development while maintaining the signature reliability of its products.

U.S. Headquarters

Email: sales@addonnetworks.com

Telephone: +1 877.292.1701

Fax: 949.266.9273

Europe Headquarters

Email: salessupportemea@addonnetworks.com

Telephone: +44 1285 842070