Maintenance and Service Guide

HP ProDesk 680 G3 MT and HP ProDesk 600 G3 MT

© Copyright 2017 HP Development Company, L.P.

Product notice

AMD is a trademark of Advanced Micro Devices, Inc. Bluetooth is a trademark owned by its proprietor and used by HP Inc. under license. Intel, Core, and Celeron are trademarks of Intel Corporation in the U.S. and other countries. Microsoft and Windows are either registered trademarks or trademarks of Microsoft Corporation in the United States and/or other countries. SD Logo is a trademark of its proprietor.

This guide describes features that are common to most models. Some features may not be available on your computer.

Not all features are available in all editions of Windows 10. This computer may require upgraded and/or separately purchased hardware, drivers and/or software to take full advantage of Windows 10 functionality. See http://www.microsoft.com for details.

The only warranties for HP products and services are set forth in the express warranty statements accompanying such products and services. Nothing herein should be construed as constituting an additional warranty. HP shall not be liable for technical or editorial errors or omissions contained herein.

The information contained herein is subject to change without notice. The only warranties for HP products and services are set forth in the express warranty statements accompanying such products and services. Nothing herein should be construed as constituting an additional warranty. HP shall not be liable for technical or editorial errors or omissions contained herein.

First Edition: January 2017

Document Part Number: 913347-001

Software terms

By installing, copying, downloading, or otherwise using any software product preinstalled on this computer, you agree to be bound by the terms of the HP End User License Agreement (EULA). If you do not accept these license terms, your sole remedy is to return the entire unused product (hardware and software) within 14 days for a full refund subject to the refund policy of your seller.

About This Book

WARNING! Text set off in this manner indicates that failure to follow directions could result in bodily harm or loss of life.

CAUTION: Text set off in this manner indicates that failure to follow directions could result in damage to equipment or loss of information.

NOTE: Text set off in this manner provides important supplemental information.

Table of contents

1 Product features 1

Standard configuration features 1

Front panel components 2

Rear panel components 3

vPro systems 3

Non-vPro systems 4

2 Illustrated parts catalog 5

Serial number location 5

Computer major components 5

Miscellaneous parts 8

3 Routine care, SATA drive guidelines, and disassembly preparation 13

Electrostatic discharge information 13

Generating static 13

Preventing electrostatic damage to equipment 14

Personal grounding methods and equipment 14

Grounding the work area 14

Recommended materials and equipment 15

Operating guidelines 15

Routine care 16

General cleaning safety precautions 16

Cleaning the computer case 16

Cleaning the keyboard 16

Cleaning the monitor 17

Cleaning the mouse 17

Service considerations 17

Tools and software requirements 17

Screws 17

Cables and connectors 18

Hard Drives 18

Lithium coin cell battery 18

SATA hard drives 19

SMART ATA drives 19

4 Removal and replacement procedures 20
Preparation for disassembly 20
Access panel 21
Dust filter 22
Front bezel 23
Internal drive bezel 24
Speaker 25
Card reader module 26
Hood sensor module 27
Serial port module 28
Fan 29
Hard drives 30
Optical drives 33
Drive cage 36
Memory module 37
Expansion card 38
Power supply 41
Fan-sink 42
Processor 44
System board 45

5 Computer Setup (F10) Utility 47
Computer Setup (F10) Utilities 47
Using Computer Setup (F10) Utilities 47
Computer Setup–Main 49
Computer Setup—Security 51
Computer Setup—Advanced 53
Recovering the Configuration Settings 58

6 Troubleshooting without diagnostics 59
Safety and comfort 59
Before you call for technical support 59
Helpful hints 60
Solving general problems 61
Solving power problems 65
Solving hard drive problems 66
Solving media card reader problems 68
Solving display problems 69
Solving audio problems 73
Solving printer problems 75

Solving keyboard and mouse problems 76
Solving hardware installation problems 79
Solving network problems 80
Solving memory problems 84
Solving USB flash drive problems 85
Solving front panel component problems 86
Solving Internet access problems 86
Solving software problems 88

7 POST error messages and diagnostic front panel LEDs and audible codes 89
POST numeric codes and text messages 89
Interpreting system validation diagnostic front panel LEDs and audible codes 94

8 Password security and resetting CMOS 96
Resetting CMOS and/or the password jumper 97
Changing a Setup or Power-on password 98
Deleting a Setup or Power-on password 99

9 Using HP PC Hardware Diagnostics (UEFI) 100
Downloading HP PC Hardware Diagnostics (UEFI) to a USB device 100

10 System backup and recovery 102
Backing up, restoring, and recovering in Windows 10 102
Creating recovery media and backups 102
Creating HP Recovery media (select products only) 102
Using Windows tools 103
Restore and recovery 103
Recovering using HP Recovery Manager 104
What you need to know before you get started 104
Using the HP Recovery partition (select products only) 105
Using HP Recovery media to recover 105
Changing the computer boot order 105
Removing the HP Recovery partition (select products only) 105
Backing up, restoring, and recovering in Windows 7 106
Creating recovery media 106
Creating recovery media using HP Recovery Manager (select models only) 107
Creating recovery discs with HP Recovery Disc Creator (select models only) 108
Creating recovery discs 108
Backing up your information 108
System Restore 109

System Recovery 109
System Recovery when Windows is responding 110
System Recovery when Windows is not responding 110
System Recovery using recovery media (select models only) 111
Using HP Recovery Disc operating system discs (select models only) 111

Appendix A Battery replacement 113

Appendix B Statement of Volatility 116

Appendix C Power cord set requirements 117
General requirements 117
Japanese power cord requirements 117
Country-specific requirements 118

Appendix D Specifications 119

Index 120

1 Product features

Standard configuration features

Features may vary depending on the model. For support assistance and to learn more about the hardware and software installed on the computer model, run the HP Support Assistant utility.

Front panel components

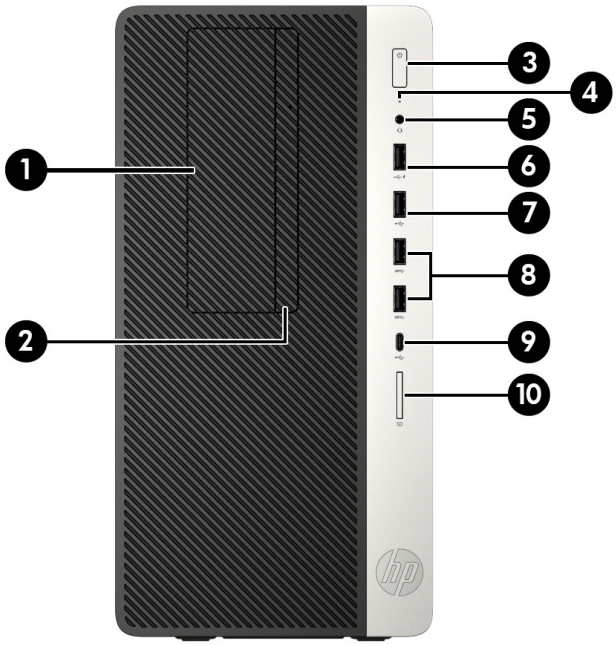

(1)	5.25-inch drive bay (behind bezel)	**(6)**	USB 2.0 port with HP Sleep and Charge*
(2)	Slim optical drive (optional)	**(7)**	USB 2.0 port
(3)	Dual-state power button	**(8)**	USB 3.x ports (2)
(4)	Hard drive activity light	**(9)**	USB Type-C charging port
(5)	Audio-out (headphone)/Audio-in (microphone) combo jackAudio-out (headphone)/Audio-in (microphone) combo jack	**(10)**	Memory card reader

*This port connects a USB device, provides high-speed data transfer, and even when the computer is off, charges products such as a cell phone, camera, activity tracker, or smartwatch.

NOTE: When a device is plugged into the combo jack, a dialog box will open asking if you want to use the connector for a microphone line-in device or a headphone. You can reconfigure the connector at any time by double-clicking the Audio Manager icon in the Windows® taskbar.

Rear panel components

Refer to the following images and tables for the rear components on vPro and non-vPro systems.

vPro systems

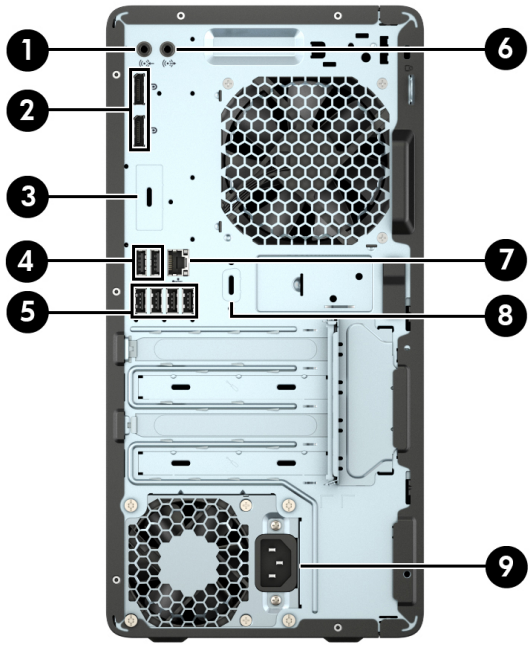

(1)		Audio-in jack	**(6)**		Audio-out jack for power audio devices
(2)		DisplayPort monitor connectors (2)	**(7)**		RJ-45 (network) jack
(3)		Optional port	**(8)**		Optional serial port
(4)		USB 2.0 ports with Wake from S4/S5 (4)	**(9)**		Power cord connector
(5)		USB 3.x Ports (2)			

NOTE: If using a USB keyboard, HP recommends connecting the keyboard to one of the USB 2.0 ports with the Wake from S4/S5 feature.

When a device is plugged into the audio-in jack, a dialog box will open asking if you want to use the connector for a microphone line-in device or a headphone. You can reconfigure the connector at any time by double-clicking the Audio Manager icon in the Windows® taskbar.

When a graphics card is installed in one of the system board slots, the video connectors on the graphics card and/or the integrated graphics on the system board may be used. The specific graphics card installed and software configuration will determine the behavior.

The system board graphics can be disabled by changing settings in Computer Setup.

Non-vPro systems

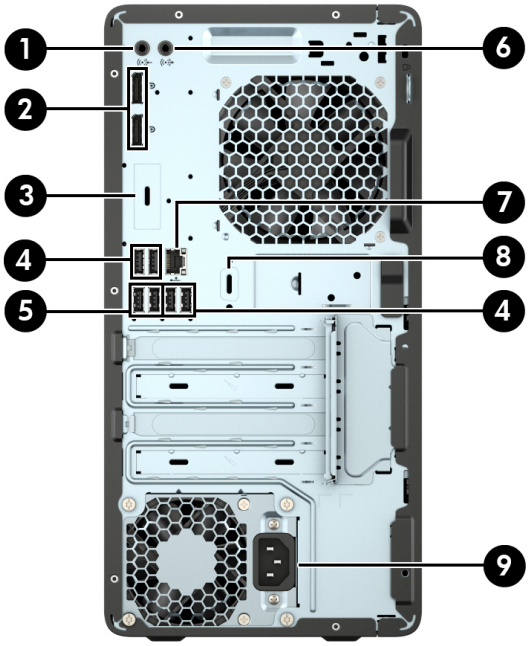

(1)		Audio-in jack	**(6)**		Audio-out jack for power audio devices
(2)		DisplayPort monitor connectors (2)	**(7)**		RJ-45 (network) jack
(3)		Optional port	**(8)**		Optional serial port
(4)		USB 2.0 ports with Wake from S4/S5 (4)	**(9)**		Power cord connector
(5)		USB 3.x Ports (2)			

NOTE: If using a USB keyboard, HP recommends connecting the keyboard to one of the USB 2.0 ports with the Wake from S4/S5 feature.

When a device is plugged into the audio-in jack, a dialog box will open asking if you want to use the connector for a microphone line-in device or a headphone. You can reconfigure the connector at any time by double-clicking the Audio Manager icon in the Windows® taskbar.

When a graphics card is installed in one of the system board slots, the video connectors on the graphics card and/or the integrated graphics on the system board may be used. The specific graphics card installed and software configuration will determine the behavior.

The system board graphics can be disabled by changing settings in Computer Setup.

2 Illustrated parts catalog

Serial number location

Each computer has a unique serial number and a product ID number that are located on the exterior of the computer. Keep these numbers available for use when contacting support for assistance.

Computer major components

Description
Access panel:
For use on computer models in all country and regions except the People's Republic of China
For use on computer models only in the People's Republic of China
Front bezel:
For use on computer models in all country and regions except the People's Republic of China
For use on computer models only in the People's Republic of China
Blank bezel
Dust filter
System boards (includes replacement thermal material):
For use on HP ProDesk 680 G3 MT computer models:
Equipped with the Windows 10 operating system and PCI slots

Description
Equipped with a non-Windows operating system and PCI slots
Equipped with NetC operating system and PCI slots in the People's Republic of China
For use on HP ProDesk 600 G3 MT computer models:
Equipped with the Windows 10 operating system
Equipped with a non-Windows operating system
Equipped with NetC operating system in the People's Republic of China
Processors:
Intel Core i7-7700 3.60-GHz processor (8.0-MB L3 cache, quad core, 65-W)
Intel Core i7-6700 3.40-GHz processor (8.0-MB L3 cache, quad core, 65-W, R-0)
Intel Core i5-7600 3.50-GHz processor (6.0-MB L3 cache, quad core, 65-W)
Intel Core i5-7500 3.40-GHz processor (6.0-MB L3 cache, quad core, 65-W)
Intel Core i5-6600 3.30-GHz processor (6.0-MB L3 cache, quad core, 65-W, R-0)
Intel Core i5-6500 3.20-GHz processor (6.0-MB L3 cache, quad core, 65-W, R-0)
Intel Core i3-7320 4.10-GHz processor (4.0-MB L3 cache, dual core, 65-W)
Intel Core i3-7300 4.00-GHz processor (4.0-MB L3 cache, dual core, 65-W)
Intel Core i3-7100 3.90-GHz processor (3.0-MB L3 cache, dual core, 65-W)
Intel Core i3-6100 3.7-GHz processor (3.0-MB L3 cache, dual core, 65-W, R-0)
Intel Celeron G4620 3.70-GHz processor (2.0-MB L3 cache, dual core, 65-W)
Intel Celeron G4600 3.60-GHz processor (2.0-MB L3 cache, dual core, 65-W)
Intel Celeron G4560 3.50-GHz processor (2.0-MB L3 cache, dual core, 65-W)
Intel Celeron G4400 3.30-GHz processor (2.0-MB L3 cache, dual core, 65-W)
Intel Celeron G3950 3.00-GHz processor (2.0-MB L3 cache, dual core, 65-W)
Intel Celeron G3930 2.90-GHz processor (2.0-MB L3 cache, dual core, 65-W)
Power supply (includes cables and plastic cable ties):
250-W, 12-V, 92-percent high volume, 2 out cables
250-W, 12-V, 85-percent high volume, 2 out cables
180-W, 12-V, 85-percent high volume, 1 out cable, small form factor
Fan-sink, 65-V (includes retention-clips)
Fan (includes cable)
Speaker, 40×28.5-mm, 2-W, 4-ohm, 140-mm (includes cable)
LED holder
Hood sensor module
Optical drive:
DVD±RW SuperMulti 16X Drive, half-height

Description
DVD-ROM Drive, 9.5-mm, slim
DVD±RW SuperMulti Drive, 9.5-mm, slim
Optical drive long bezel blank, 9.5-mm, slim
Optical drive latch, 9.5-mm, slim
Removable DP27 Kit, 9.5-mm, slim
Networking:
Intel 7265.NGWG.NV ac 2×2 + Bluetooth 4.0 LE PCIe + USB NGFF 2230 non-vPro Combo Adapter
Intel ac 2×2 + Bluetooth 4.2 M.2 PCI-e + USB non-vPro Combo Adapter
Intel ac 2×2 + Bluetooth 4.2 M.2 PCI-e + USB vPro Combo Adapter
Intel PRO/1000 single port network interface card
Realtek RTL8723BE b/g/n 1×1 + Bluetooth 4.0 LE PCIe + USB M.2 Combo Adapter
Antenna cover FXN
Internal wireless antenna cable assembly
Memory modules (4, DDR4-2400, DIMM):
16-GB
8-GB
4-GB
2-GB
Fan
Heat sink (includes replacement thermal material)
Hard drive:
2-TB, 7200-rpm, SATA
1-TB, 7200-rpm, SATA
1-TB, 7200-rpm, Hybrid NAND
1-TB, 5400-rpm, Hybrid 8-GB
500-GB, 7200-rpm, SATA
500-GB, 7200-rpm, SATA with self-encryption and OPAL2
500-GB, 5400-rpm with Federal Information Processing Standard (FIPS) security and OPAL2
500-GB, 7200-rpm, Hybrid 8-GB NAND with OPAL2
5.25-in–to–3.5-in hard drive adapter
3.5-in–to–2.5-in Universal Single Hard Drive Carrier
Hard drive isolation grommets, M3, black
Hard drive isolation grommets, M3, blue
Solid-state drive:

Description
1-TB, 2280 M.2, Non-Volatile Memory express (NVMe) solid-state drive with secure seal (SS) and triple-level cell (TLC)
512-GB, 2280 M.2, NVMe solid-state drive with SS and TLC
512-GB, 2280 M.2, NVMe solid-state drive with SS
512-GB solid-state drive with Federal Information Processing Standard (FIPS) 140-2 security
512-GB, self-encrypted solid-state drive with OPAL2 and TLC
256-GB, SATA-3 solid-state drive
256-GB, 2280 M.2, NVMe solid-state drive with SS and TLC
256-GB, 2280 M.2, NVMe solid-state drive with SS
256-GB solid-state drive with FIPS 140-2 security
128-GB, SATA-3 solid-state drive

Miscellaneous parts

Description
Power cord with C13 receptacle, 1.83-meter (6.00-feet)
For use in Argentina
For use in Australia and New Zealand
For use in Brazil
For use in Denmark
For use in Europe
For use in Israel
For use in Italy
For use in the People's Republic of China
For use in South Africa
For use in South Korea
For use in Switzerland
For use in Taiwan
For use in the United Kingdom and Singapore
Power cord with C13 receptacle, 1.83-meter (6.00-feet) 5-15P for use in Thailand
Power cord with C13 receptacle, 1.83-meter (6.00-feet) 6-amp for use in India
Power cord with Option-949 adapter ROHS
Adapters:
HP DisplayPort–to–DVI SL adapter
HP DisplayPort–to–HDMI 1.4 adapter

Description
HP DisplayPort–to–VGA adapter
HP USB Type-C–to–DisplayPort adapter
HP USB Type-C–to–USB 3.0 adapter
Cables:
DisplayPort cable (1.83-m)
DVI–to–DVI monitor cable (RoHS)
Hard drive SATA power cable (2×2-pin)
Optical drive SATA power cable (2×2-pin)
PS/2 plus serial port cable (200-mm)
SATA cable (straight–to–right angle connector, 11-in)
SATA cable (straight–to–right angle connector, RF solution, 11-in)
SATA cable (straight–to–straight connector, 14-in)
SATA cable (straight–to–straight connector, 11-in)
SATA cable (straight–to–straight connector, 8-in)
SATA cable (straight–to–straight connector, RF solution, 14-in)
SATA cable (straight–to–straight connector, RF solution, 11-in)
SATA cable (straight–to–straight connector, RF solution, 8-in)
Serial port cable (150-mm)
Expansion cards:
DisplayPort option board
DVI–to–VGA HF adapter
HDMI option board
Parallel port PCIe x1 card
PS/2+Serial port assembly
Serial port assembly
USB 3.1 Type-C PCI-3 x1 LP card
USB Type-C option card
VGA option board
Graphics cards:
AMD RX 460 FH 2-GB GDDR-5 PCIex1 graphics card
AMD R7 450 FH 4-GB PCIex16 graphics card
Nvidia GT370 1-GB PCIex8 graphics card
Nvidia GT370 2-GB PCIex8 graphics card
Graphics card supporting rubber

Description
HP PS/2 slim Windows 8 keyboard:
For use in Belgium
For use in BHCSY
For use in Bulgaria
For use in Canada
For use in the Czech Republic and Slovakia
For use in Denmark
For use in France
For use in Germany
For use in Greece
For use in Hungary
For use in India
For use in INT
For use in Israel
For use in Italy
For use in Japan
For use in Latin America
For use in North Africa
For use in Norway
For use in the People's Republic of China
For use in Portugal
For use in Romania
For use in Russia
For use in Saudi Arabia
For use in South Korea
For use in Spain
For use in Sweden
For use in Switzerland
For use in Taiwan
For use in Thailand
For use in Turkey
For use in the United Kingdom and Singapore
For use in the United States
HP USB slim Windows 8 keyboard:

Description
For use in Belgium
For use in BHCSY
For use in Bulgaria
For use in Canada
For use in the Czech Republic and Slovakia
For use in Denmark
For use in France
For use in Germany
For use in Greece
For use in Hungary
For use in India
For use in INT
For use in Israel
For use in Italy
For use in Japan
For use in Latin America
For use in North Africa
For use in Norway
For use in the People's Republic of China
For use in Portugal
For use in Romania
For use in Russia
For use in Saudi Arabia
For use in South Korea
For use in Spain
For use in Sweden
For use in Switzerland
For use in Taiwan
For use in Thailand
For use in Turkey
For use in the United Kingdom and Singapore
For use in the United States
HP wireless Windows 8 keyboard, mouse, and dongle combination:
For use in Canada

Description
For use in Japan
For use in Latin America
For use in the People's Republic of China
For use in the South Korea
For use in Taiwan
For use in Thailand
For use in the United States
HP Antimicrobial slim business keyboard for use in the People's Republic of China
HP USB slim business keyboard in grey finish for use in Germany
USB PS/2 washable Windows 8 keyboard (BFR-PVC):
For use in Brazil
For use in Canada
For use in Latin America
For use in the United States
Lock:
HP Business PC Security Lock Kit
HP dual head keyed cable lock
HP keyed cable lock
HP master keyed cable lock
Solenoid lock
Mouse:
HP PS/2 optical mouse
HP USB antimicrobial mouse
HP USB hardened mouse
HP USB laser mouse
HP USB mouse in grey finish
HP USB optical mouse
USB PS/2 washable mouse
USB 3.0 SD Card reader

3 Routine care, SATA drive guidelines, and disassembly preparation

This chapter provides general service information for the computer. Adherence to the procedures and precautions described in this chapter is essential for proper service.

⚠ **CAUTION:** When the computer is plugged into an AC power source, voltage is always applied to the system board. The power cord must be disconnected from the power source before opening the computer to prevent system board or component damage.

Electrostatic discharge information

A sudden discharge of static electricity from your finger or other conductor can destroy static-sensitive devices or microcircuitry. Often the spark is neither felt nor heard, but damage occurs. An electronic device exposed to electrostatic discharge (ESD) may not appear to be affected at all and can work perfectly throughout a normal cycle. The device may function normally for a while, but it has been degraded in the internal layers, reducing its life expectancy.

Networks built into many integrated circuits provide some protection, but in many cases, the discharge contains enough power to alter device parameters or melt silicon junctions.

Generating static

The following table shows how humidity affects the electrostatic voltage levels generated by different activities. A product can be degraded by 700 volts.

- Different activities generate different amounts of static electricity.
- Static electricity increases as humidity decreases.

	Relative Humidity		
Event	**55%**	**40%**	**10%**
Walking across carpet	7,500 V	15,000 V	35,000 V
Walking across vinyl floor	3,000 V	5,000 V	12,000 V
Motions of bench worker	400 V	800 V	6,000 V
Removing DIPs from plastic tube	400 V	700 V	2,000 V
Removing DIPs from vinyl tray	2,000 V	4,000 V	11,500 V
Removing DIPs from Styrofoam	3,500 V	5,000 V	14,500 V
Removing bubble pack from PCB	7,000 V	20,000 V	26,500 V
Packing PCBs in foam-lined box	5,000 V	11,000 V	21,000 V

Preventing electrostatic damage to equipment

Many electronic components are sensitive to ESD. Circuitry design and structure determine the degree of sensitivity. The following packaging and grounding precautions are necessary to prevent damage to electric components and accessories.

- To avoid hand contact, transport products in static-safe containers such as tubes, bags, or boxes.
- Protect all electrostatic-sensitive parts and assemblies with conductive or approved containers or packaging.
- Keep electrostatic-sensitive parts in their containers until they arrive at static-free stations.
- Place items on a grounded surface before removing them from their containers.
- Always be properly grounded when touching a sensitive component or assembly.
- Avoid contact with pins, leads, or circuitry.
- Place reusable electrostatic-sensitive parts from assemblies in protective packaging or conductive foam.

Personal grounding methods and equipment

Use the following equipment to prevent static electricity damage to equipment:

- **Wrist straps** are flexible straps with a maximum of one-megohm ± 10% resistance in the ground cords. To provide proper ground, a strap must be worn snugly against bare skin. The ground cord must be connected to the banana plug connector on the grounding mat or workstation and fit snugly into it.
- **Heel straps/Toe straps/Boot straps** can be used at standing workstations and are compatible with most types of shoes or boots. On conductive floors or dissipative floor mats, use them on both feet with a maximum of one-megohm ± 10% resistance between the operator and ground.

Static Shielding Protection Levels

Method	Voltage
Antistatic plastic	1,500
Carbon-loaded plastic	7,500
Metallized laminate	15,000

Grounding the work area

To prevent static damage at the work area, observe the following precautions:

- Cover the work surface with approved static-dissipative material. Provide a wrist strap connected to the work surface and use properly grounded tools and equipment.
- Use static-dissipative mats, foot straps, or air ionizers to give added protection.
- Handle electrostatic-sensitive components, parts, and assemblies by the case or PCB laminate. Handle them only at static-free work areas.
- Turn off power and input signals before inserting and removing connectors or test equipment.
- Use fixtures made of static-safe materials when fixtures must directly contact dissipative surfaces.
- Keep work area free of nonconductive materials such as ordinary plastic assembly aids and Styrofoam.
- Use field service tools, such as cutters, screwdrivers, and vacuums, that are conductive.

Recommended materials and equipment

The following grounding equipment is recommended to prevent electrostatic damage:

- Antistatic tape
- Antistatic smocks, aprons, or sleeve protectors
- Conductive bins and other assembly or soldering aids
- Conductive foam
- Conductive tabletop workstations with ground cords of one-megohm +/- 10% resistance
- Static-dissipative table or floor mats with hard ties to ground
- Field service kits
- Static awareness labels
- Wrist straps and footwear straps providing one-megohm +/- 10% resistance
- Material handling packages
- Conductive plastic bags
- Conductive plastic tubes
- Conductive tote boxes
- Opaque shielding bags
- Transparent metallized shielding bags
- Transparent shielding tubes

Operating guidelines

To prevent overheating and to help prolong the life of the computer:

- Keep the computer away from excessive moisture, direct sunlight, and extremes of heat and cold.
- Operate the computer on a sturdy, level surface. Leave a 10.2 cm (4-inch) clearance on all vented sides of the computer and above the monitor to permit the required airflow.
- Never restrict the airflow into the computer by blocking any vents or air intakes. Do not place the keyboard, with the keyboard feet down, directly against the front of the desktop unit as this also restricts airflow.
- Occasionally clean the air vents on all vented sides of the computer. Lint, dust, and other foreign matter can block the vents and limit the airflow. Be sure to unplug the computer before cleaning the air vents.
- Never operate the computer with the cover or side panel removed.
- Do not stack computers on top of each other or place computers so near each other that they are subject to each other's re-circulated or preheated air.
- If the computer is to be operated within a separate enclosure, intake and exhaust ventilation must be provided on the enclosure, and the same operating guidelines listed above will still apply.
- Keep liquids away from the computer and keyboard.

- Never cover the ventilation slots on the monitor with any type of material.
- Install or enable power management functions of the operating system or other software, including sleep states.

Routine care

General cleaning safety precautions

1. Never use solvents or flammable solutions to clean the computer.
2. Never immerse any parts in water or cleaning solutions; apply any liquids to a clean cloth and then use the cloth on the component.
3. Always unplug the computer when cleaning with liquids or damp cloths.
4. Always unplug the computer before cleaning the keyboard, mouse, or air vents.
5. Disconnect the keyboard before cleaning it.
6. Wear safety glasses equipped with side shields when cleaning the keyboard.

Cleaning the computer case

Follow all safety precautions in General cleaning safety precautions on page 16 before cleaning the computer.

To clean the computer case, follow the procedures described below:

- To remove light stains or dirt, use plain water with a clean, lint-free cloth or swab.
- For stronger stains, use a mild dishwashing liquid diluted with water. Rinse well by wiping the surface with a cloth or swab dampened with clear water.
- For stubborn stains, use isopropyl (rubbing) alcohol. No rinsing is needed; alcohol will evaporate quickly without leaving a residue.
- After cleaning, always wipe the unit with a clean, lint-free cloth.
- Occasionally clean the air vents on the computer. Lint and other foreign matter can block the vents and limit the airflow.

Cleaning the keyboard

Follow all safety precautions in General cleaning safety precautions on page 16 before cleaning the keyboard.

To clean the tops of the keys or the keyboard body, follow the procedures described in Cleaning the computer case on page 16.

When cleaning debris from under the keys, review all rules in General cleaning safety precautions on page 16 before following these procedures:

⚠ **CAUTION:** Use safety glasses equipped with side shields before attempting to clean debris from under the keys.

- Visible debris underneath or between the keys may be removed by vacuuming or shaking.
- Canned, pressurized air may be used to clean debris from under the keys. Caution should be used as too much air pressure can dislodge lubricants applied under the wide keys.

- If you want to remove a key, use a specially designed key puller to prevent damage to the keys. This tool is available through many electronics supply outlets.

CAUTION: Never remove a wide, level key (like the space bar) from the keyboard. If these keys are improperly removed or installed, the keyboard may not function properly.

- Cleaning under a key may be done with a swab moistened with isopropyl alcohol and then squeezed out. Be careful not to wipe away lubricants necessary for proper key functions. Use tweezers to remove any fibers or dirt in confined areas. Allow the parts to air dry before reassembly.

Cleaning the monitor

- Wipe the monitor screen with a towelette designed for cleaning monitors or with a clean cloth moistened with water. Do not use sprays or aerosols directly on the screen; the liquid may seep into the housing and damage a component. Never use solvents or flammable liquids on the monitor.
- To clean the monitor body follow the procedures in Cleaning the computer case on page 16.

Cleaning the mouse

Before cleaning the mouse, ensure that the power to the computer is turned off.

- Clean the mouse ball by first removing the retaining plate and the ball from the housing. Pull out any debris from the ball socket and wipe the ball with a clean, dry cloth before reassembly.
- To clean the mouse body, follow the procedures in Cleaning the computer case on page 16.

Service considerations

Listed below are some of the considerations that you should keep in mind during the disassembly and assembly of the computer.

Tools and software requirements

To service the computer, you need the following:

- Torx T-15 screwdriver
- Flat-bladed screwdriver (may sometimes be used in place of the Torx screwdriver)
- Phillips #2 screwdriver
- Diagnostics software

Screws

The screws used in the computer are not interchangeable. They may have standard or metric threads and may be of different lengths. If an incorrect screw is used during the reassembly process, it can damage the unit. HP strongly recommends that all screws removed during disassembly be kept with the part that was removed, then returned to their proper locations.

CAUTION: Metric screws have a black finish. U.S. screws have a silver finish and are used on hard drives only.

CAUTION: As each subassembly is removed from the computer, it should be placed away from the work area to prevent damage.

Cables and connectors

Most cables used throughout the unit are flat, flexible cables. These cables must be handled with care to avoid damage. Apply only the tension required to seat or unseat the cables during insertion or removal from the connector. Handle cables by the connector whenever possible. In all cases, avoid bending or twisting the cables, and ensure that the cables are routed in such a way that they cannot be caught or snagged by parts being removed or replaced.

⚠ **CAUTION:** When servicing this computer, ensure that cables are placed in their proper location during the reassembly process. Improper cable placement can damage the computer.

Hard Drives

Handle hard drives as delicate, precision components, avoiding all physical shock and vibration. This applies to failed drives as well as replacement spares.

- If a drive must be mailed, place the drive in a bubble-pack mailer or other suitable protective packaging and label the package “Fragile: Handle With Care.”
- Do not remove hard drives from the shipping package for storage. Keep hard drives in their protective packaging until they are actually mounted in the computer.
- Avoid dropping drives from any height onto any surface.
- If you are inserting or removing a hard drive, turn off the computer. Do not remove a hard drive while the computer is on or in standby mode.
- Before handling a drive, ensure that you are discharged of static electricity. While handling a drive, avoid touching the connector.
- Do not use excessive force when inserting a drive.
- Avoid exposing a hard drive to liquids, temperature extremes, or products that have magnetic fields such as monitors or speakers.

Lithium coin cell battery

The battery that comes with the computer provides power to the real-time clock and has a minimum lifetime of about three years.

See the appropriate removal and replacement chapter for the chassis you are working on in this guide for instructions on the replacement procedures.

⚠ **WARNING!** This computer contains a lithium battery. There is a risk of fire and chemical burn if the battery is handled improperly. Do not disassemble, crush, puncture, short external contacts, dispose in water or fire, or expose it to temperatures higher than 140ºF (60ºC). Do not attempt to recharge the battery.

NOTE: Batteries, battery packs, and accumulators should not be disposed of together with general household waste. In order to forward them for recycling or proper disposal, please use the public collection system or return them to HP.

SATA hard drives

Serial ATA Hard Drive Characteristics	
Number of pins/conductors in data cable	7/7
Number of pins in power cable	15
Maximum data cable length	39.37 in (100 cm)
Data interface voltage differential	400-700 mV
Drive voltages	3.3 V, 5 V, 12 V
Jumpers for configuring drive	N/A
Data transfer rate	6.0 Gb/s

SMART ATA drives

The Self Monitoring Analysis and Recording Technology (SMART) ATA drives for HP personal computers have built-in drive failure prediction that warns the user or network administrator of an impending failure (crash) of the hard drive. The SMART drive tracks fault prediction and failure indication parameters such as reallocated sector count, spin retry count, and calibration retry count. If the drive determines that a failure is imminent, it generates a fault alert.

4 Removal and replacement procedures

Adherence to the procedures and precautions described in this chapter is essential for proper service. After completing all necessary removal and replacement procedures, run the Diagnostics utility to verify that all components operate properly.

NOTE: Not all features listed in this guide are available on all computers.

Preparation for disassembly

WARNING! Voltage is always present on the system board when the computer is plugged into an active AC outlet. To avoid possible personal injury and damage to the equipment the power cord should be disconnected from the computer and/or the AC outlet before opening the computer.

See Routine care, SATA drive guidelines, and disassembly preparation on page 13 for initial safety procedures.

1. Remove/disengage any security devices that prohibit opening the computer.
2. Remove all removable media, such as compact discs or USB flash drives, from the computer.
3. Turn off the computer properly through the operating system, then turn off any external devices.
4. Disconnect the power cord from the power outlet and disconnect any external devices.

CAUTION: Turn off the computer before disconnecting any cables.

Regardless of the power-on state, voltage is always present on the system board as long as the system is plugged into an active AC outlet. In some systems the cooling fan is on even when the computer is in the “Standby,” or “Suspend” modes. The power cord should always be disconnected before servicing a unit.

NOTE: During disassembly, label each cable as you remove it, noting its position and routing. Keep all screws with the removed components.

Access panel

1. Prepare the computer for disassembly (see Preparation for disassembly on page 20).
2. Position the computer with the rear toward you.
3. Slide the access panel release latch **(1)** to the left.
4. Use the access panel release handle **(2)** to pull the access panel back.
5. Remove the access panel **(3)**.

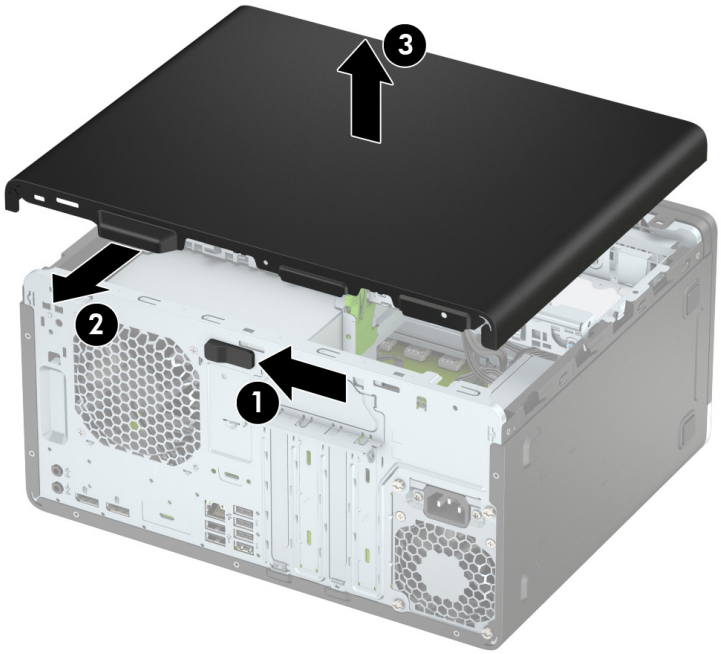

Reverse this procedure to install the access panel.

Dust filter

1. Prepare the computer for disassembly (see Preparation for disassembly on page 20).
2. Remove the access panel (see Access panel on page 21).
3. Stand the computer upright with the front facing toward you.
4. Detach the dust filter from the front of the computer.

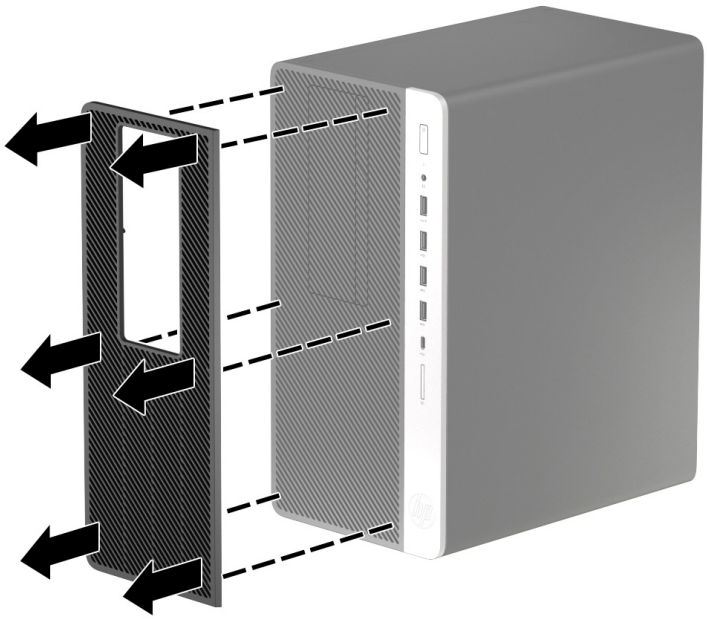

Reverse this procedure to install the dust filter.

Front bezel

1. Prepare the computer for disassembly (see Preparation for disassembly on page 20).
2. Remove the access panel (see Access panel on page 21).
3. Position the computer in the horizontal mode with the front facing toward you.
4. Release the three tabs **(1)** on the top of the front bezel from the computer chassis.
5. Swing the top edge of the front bezel **(2)** away from the computer chassis.

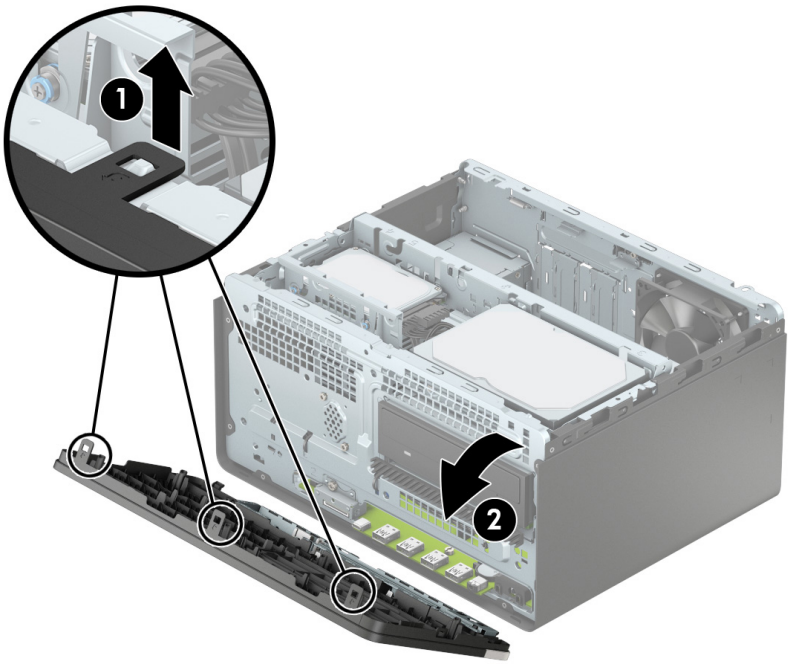

6. Remove the front bezel.

Reverse this procedure to install the front bezel.

Internal drive bezel

1. Prepare the computer for disassembly (see Preparation for disassembly on page 20).
2. Remove the access panel (see Access panel on page 21).
3. Remove the front bezel (see Front bezel on page 23).
4. Release the tab **(1)** on the left side of the internal drive bezel that attaches to the front bezel.
5. Remove the internal drive bezel **(2)**.

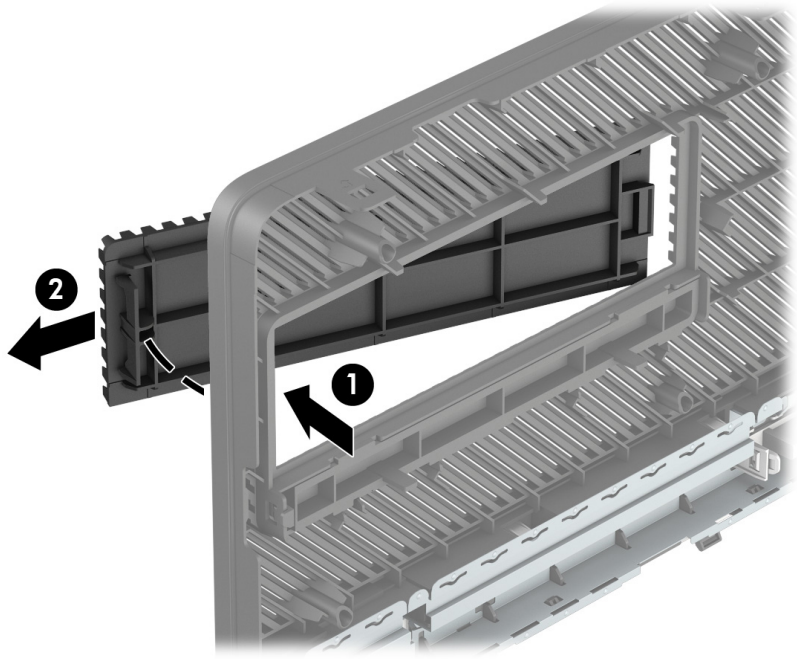

Reverse this procedure to install the internal drive bezel.

Speaker

Follow these steps to remove the speaker:

1. Prepare the computer for disassembly (see Preparation for disassembly on page 20).
2. Remove the access panel (see Access panel on page 21).
3. Position the computer with the front panel toward you.
4. Disconnect the speaker cable **(1)** from the system board.
5. Remove the two Torx-15 M3.5×8.5 screws **(2)** that secure the speaker to the computer chassis.
6. Remove the speaker **(3)**.

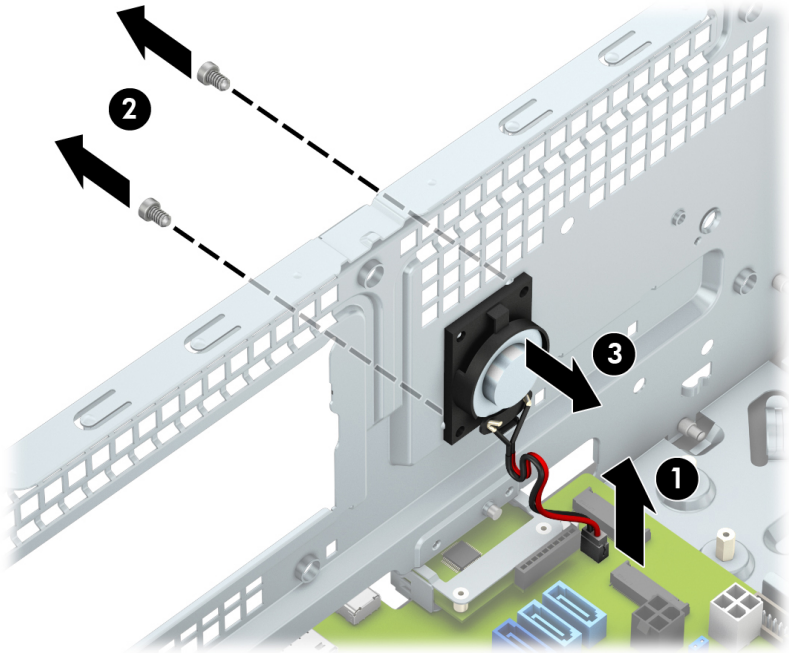

Reverse this procedure to install the speaker.

Card reader module

Follow these steps to remove the card reader module:

1. Prepare the computer for disassembly (see Preparation for disassembly on page 20).
2. Remove the access panel (see Access panel on page 21).
3. Position the computer with the front panel toward you.
4. Disconnect the card reader module cable **(1)** from the system board.
5. Remove the Torx-15 M3.5×8.5 screw **(2)** that secures the card reader module to the computer chassis.
6. Remove the card reader module **(3)**.

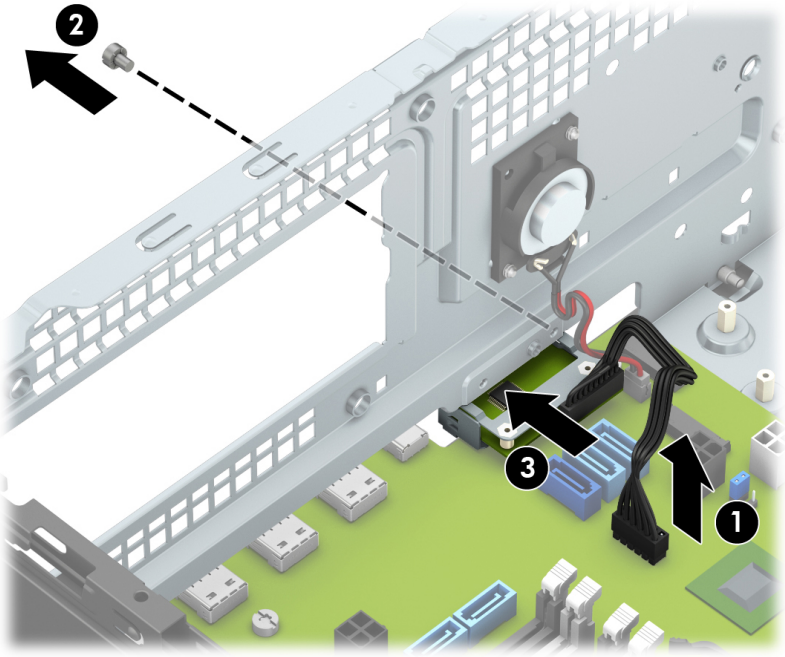

Reverse this procedure to install the card reader module.

Hood sensor module

Follow these steps to remove the hood sensor module:

1. Prepare the computer for disassembly (see Preparation for disassembly on page 20).
2. Remove the access panel (see Access panel on page 21).
3. Position the computer with the rear panel toward you.
4. Disconnect the hood sensor module cable **(1)** from the system board.
5. Release the hood sensor module **(2)** from the retention clip built into the computer chassis.

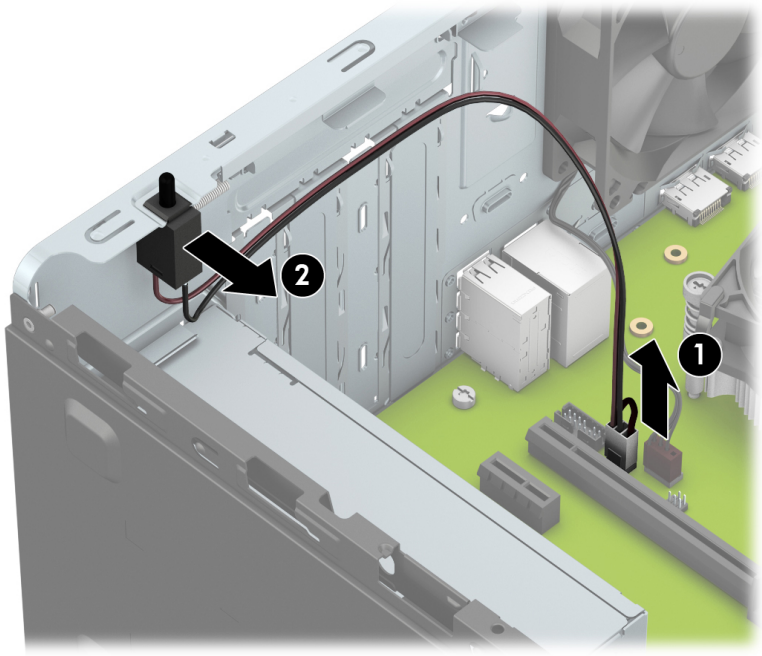

6. Remove the hood sensor module.

Reverse this procedure to install the hood sensor module.

Serial port module

Follow these steps to remove the serial port module:

1. Prepare the computer for disassembly (see Preparation for disassembly on page 20).
2. Remove the access panel (see Access panel on page 21).
3. Position the computer with the rear panel toward you.
4. Disconnect the serial port module cable **(1)** from the system board.
5. Remove the two 3/16” screwlocks **(2)** that secure the serial port module to the computer chassis.
6. Remove the serial port module **(3)**.

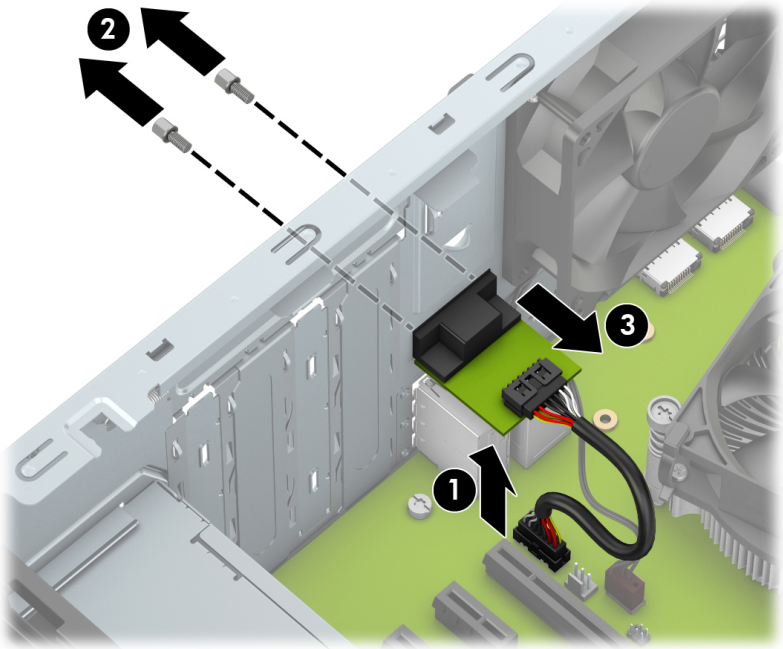

Reverse this procedure to install the serial port module.

Fan

Follow these steps to remove the speaker:

1. Prepare the computer for disassembly (see Preparation for disassembly on page 20).
2. Remove the access panel (see Access panel on page 21).
3. Position the computer with the rear panel toward you.
4. Disconnect the fan cable **(1)** from the system board.
5. Remove the three Phillips PM4.8×12.2 screws **(2)** that secure the fan to the computer chassis.
6. Remove the fan **(3)**.

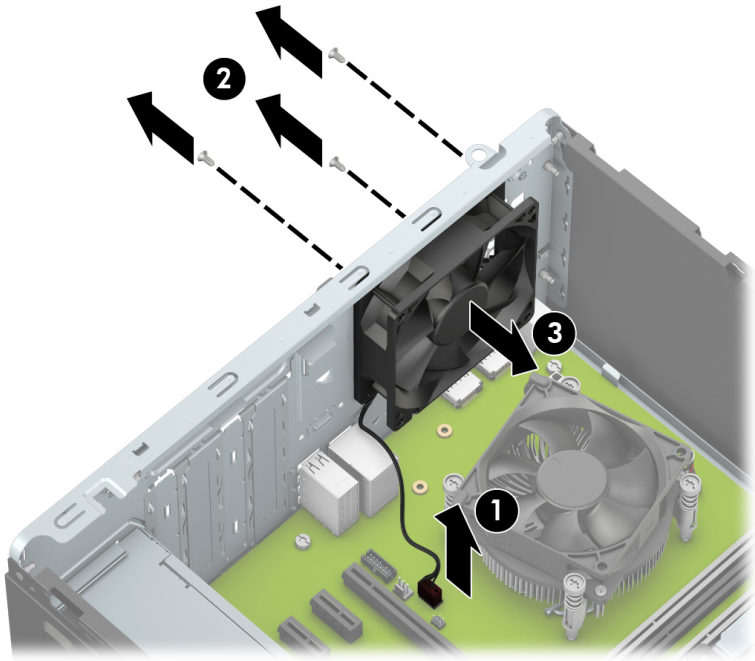

Reverse this procedure to install the fan.

Hard drives

Follow these steps to remove a 2.5-inch hard drive:

1. Prepare the computer for disassembly (see Preparation for disassembly on page 20).
2. Remove the access panel (see Access panel on page 21).
3. Disconnect the hard drive power cable **(1)** from the 2.5-inch hard drive.
4. Disconnect the hard drive data cable **(2)** from the 2.5-inch hard drive.

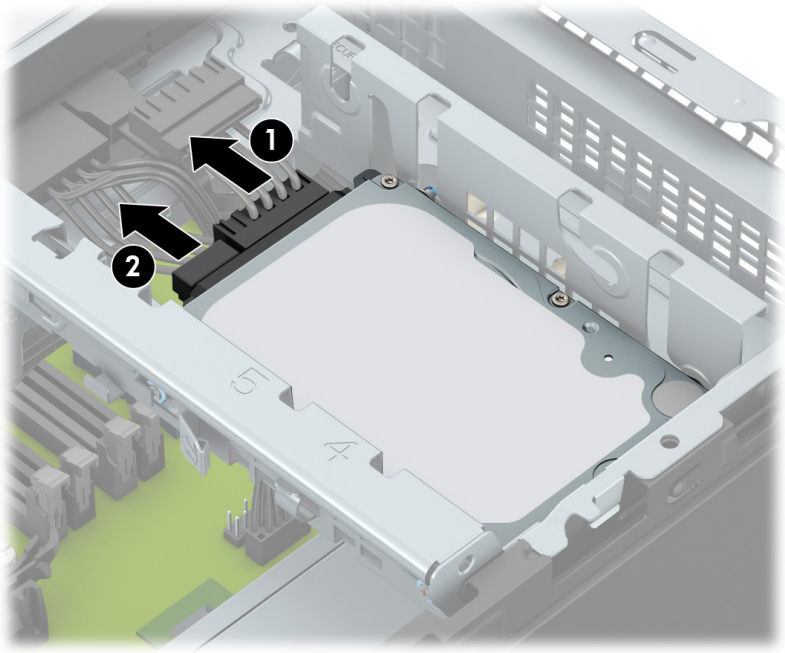

5. Release the retention clip **(1)** that secures the 2.5-inch hard drive to the drive cage.
6. Lift the left side of the 2.5-inch hard drive **(2)** until it releases from the slots in the drive cage.

7. Slide the 2.5-inch hard drive to the left as far as it will go, and then remove the 2.5-inch hard drive **(3)**.

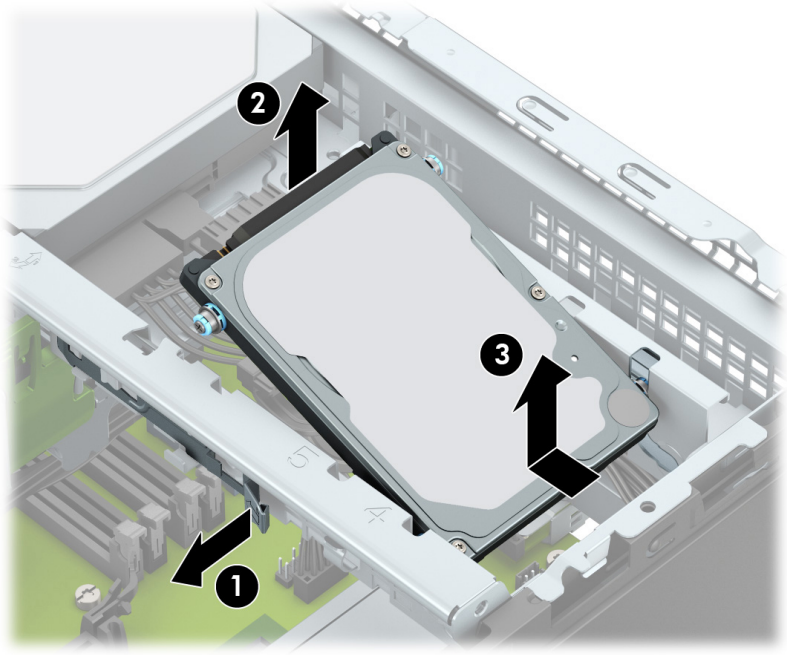

Follow these steps to remove a 3.5-inch hard drive:

1. Prepare the computer for disassembly (see Preparation for disassembly on page 20).
2. Remove the access panel (see Access panel on page 21).
3. Position the computer with the rear panel toward you.
4. Disconnect the hard drive power cable **(1)** from the 3.5-inch hard drive.
5. Disconnect the hard drive data cable **(2)** from the 3.5-inch hard drive.

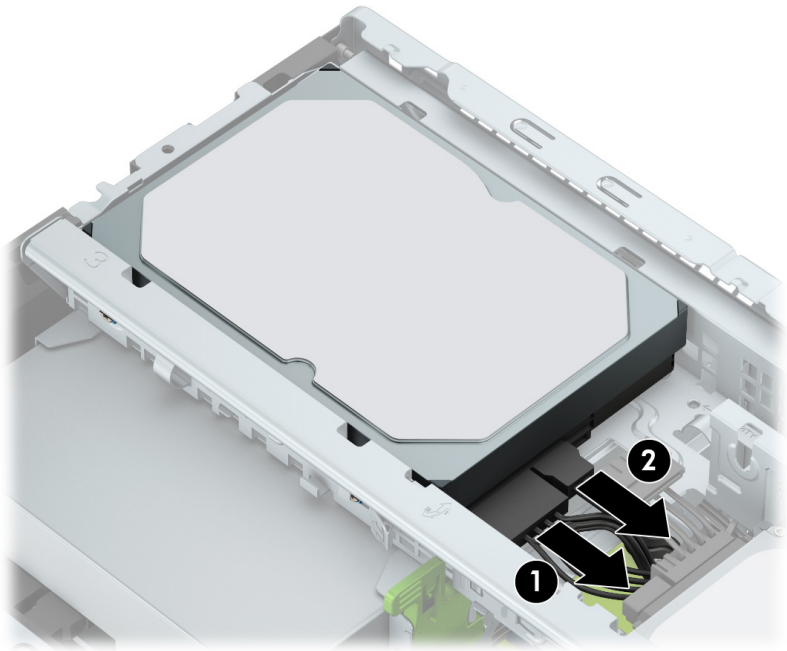

6. Release the retention clip **(1)** that secures the 3.5-inch hard drive to the drive cage.
7. Lift the right side of the 3.5-inch hard drive **(2)** until it releases from the slots in the drive cage.
8. Slide the 3.5-inch hard drive to the right as far as it will go, and then remove the 3.5-inch hard drive **(3)**.

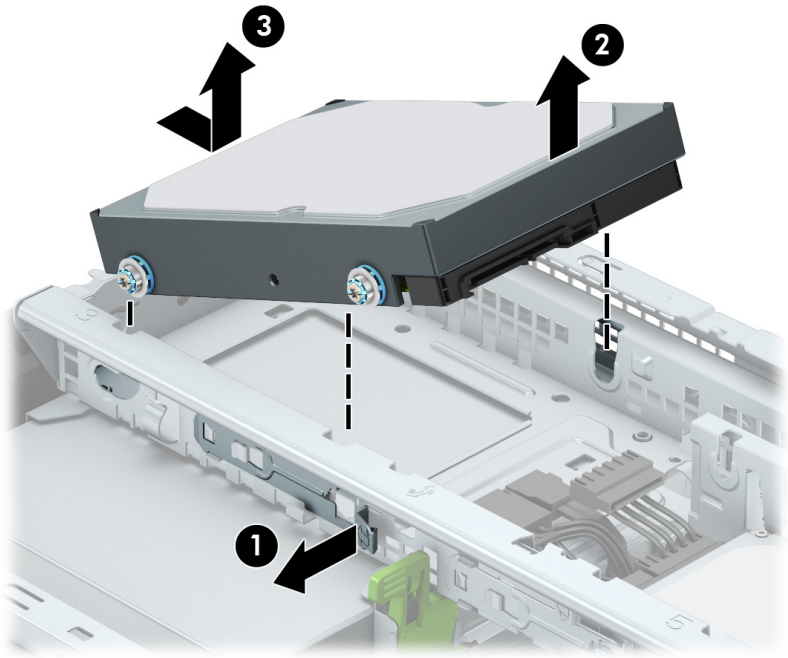

Reverse this procedure to install the hard drives.

Optical drives

Follow these steps to remove a 5.25-inch size optical drive:

1. Prepare the computer for disassembly (see Preparation for disassembly on page 20).
2. Remove the access panel (see Access panel on page 21).
3. Disconnect the optical drive power cable **(1)** from the optical drive.
4. Disconnect the optical drive data cable **(2)** from the optical drive.

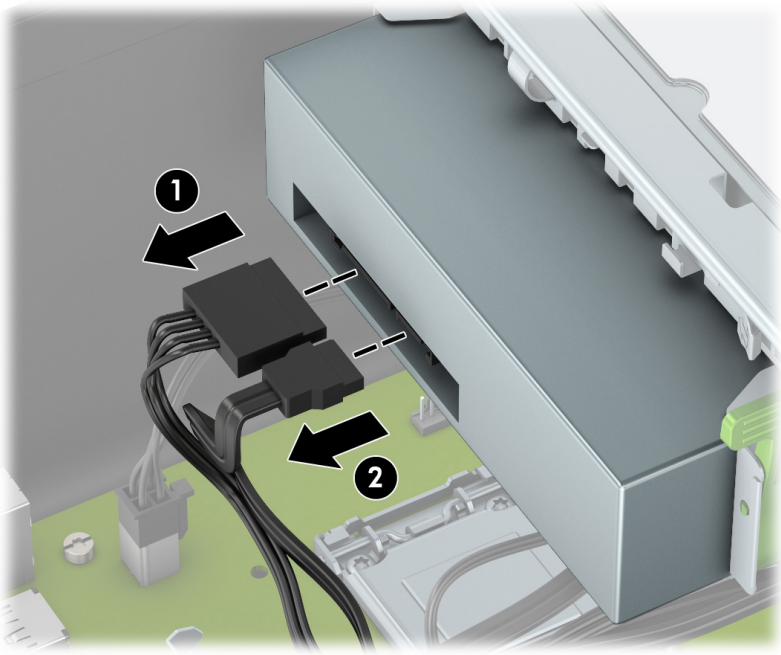

5. Press and hold the optical drive release latch **(1)** that secures the optical drive to the drive cage.

6. Slide the optical drive **(2)** out of the optical drive bay.

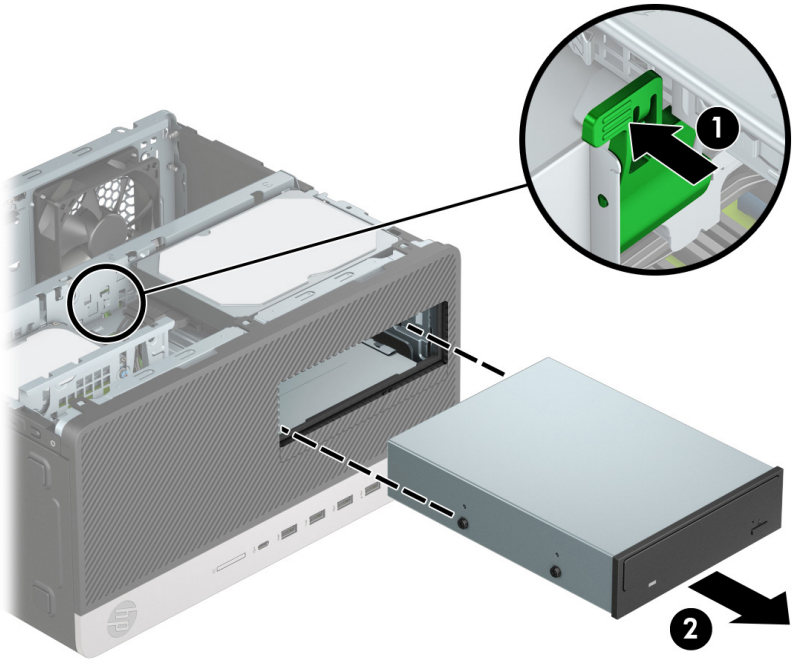

Follow these steps to remove a slim optical drive:

1. Prepare the computer for disassembly (see Preparation for disassembly on page 20).
2. Remove the access panel (see Access panel on page 21).
3. Disconnect the optical drive data cable **(1)** from the optical drive.
4. Disconnect the optical drive power cable **(2)** from the optical drive.

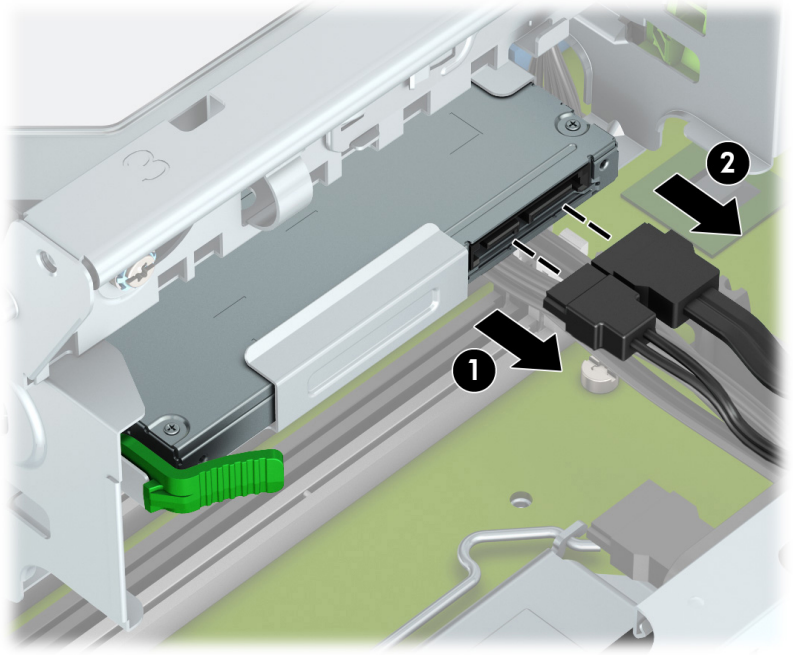

5. Press on the optical drive release latch **(1)** that secures the optical drive to the drive cage.

6. Slide the optical drive **(2)** out of the optical drive bay.

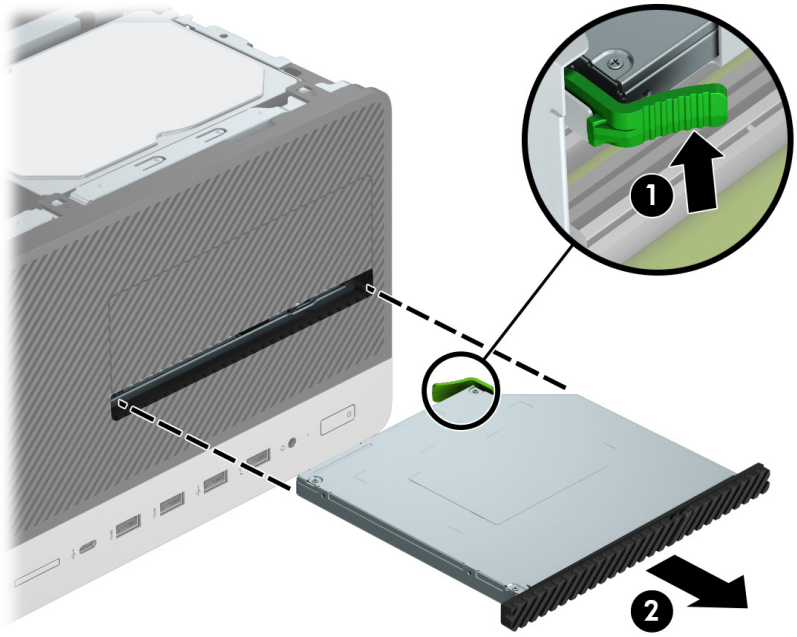

Reverse this procedure to install the optical drives.

Drive cage

1. Prepare the computer for disassembly (see Preparation for disassembly on page 20).
2. Remove the access panel (see Access panel on page 21).
3. Disconnect all cables to drives installed in the drive cage (see Hard drives on page 30 and Optical drives on page 33).
4. Lift the rear edge of the drive cage **(1)** to disengage the cage from the computer chassis.
5. Slide the drive cage **(2)** toward the rear panel.
6. Remove the drive cage **(3)**.

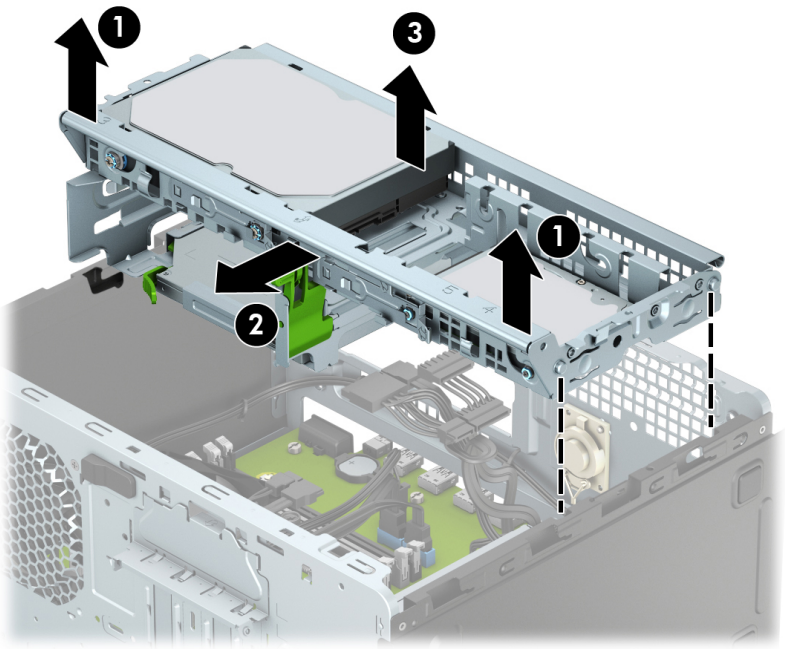

Reverse this procedure to install the drive cage.

Memory module

The computer has three memory module sockets.

⚠ **CAUTION:** You must disconnect the power cord and wait approximately 30 seconds for the power to drain before adding or removing memory modules. Regardless of the power-on state, voltage is always supplied to the memory modules as long as the computer is plugged into an active AC outlet. Adding or removing memory modules while voltage is present may cause irreparable damage to the memory modules or system board.

The memory module sockets have gold-plated metal contacts. When upgrading the memory, it is important to use memory modules with gold-plated metal contacts to prevent corrosion and/or oxidation resulting from having incompatible metals in contact with each other.

Static electricity can damage the electronic components of the computer or optional cards. Before beginning these procedures, ensure that you are discharged of static electricity by briefly touching a grounded metal object.

When handling a memory module, be careful not to touch any of the contacts. Doing so may damage the module.

To remove, replace, or add a memory module:

1. Prepare the computer for disassembly (see Preparation for disassembly on page 20).
2. Remove the access panel (see Access panel on page 21).
3. Remove the drive cage (see Drive cage on page 36).
4. Open both latches **(1)** of the memory module socket.
5. Remove the memory module **(2)** from the socket.

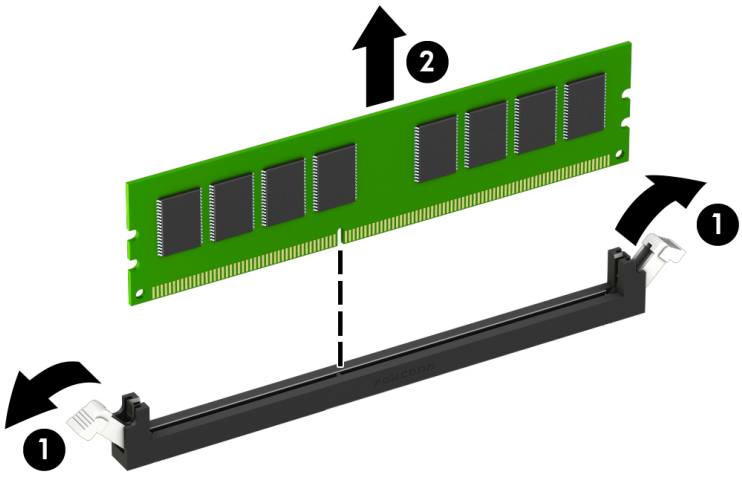

Reverse this procedure to install a memory module. Reconfigure the computer, if necessary.

Expansion card

The computer has two PCI Express x1 expansion sockets and two PCI Express x16 expansion sockets.

NOTE: The PCI Express sockets support only low profile cards.

You can install a PCI Express x1, x4, x8, or x16 expansion card in the PCI Express x16 sockets.

For dual graphics card configurations, the first (primary) card must be installed in the PCI Express x16 sockets.

To remove, replace, or add an expansion card:

1. Prepare the computer for disassembly (see Preparation for disassembly on page 20).
2. Remove the access panel (see Access panel on page 21).
3. Remove the drive cage (see Drive cage on page 36).
4. Locate the correct vacant expansion socket on the system board and the corresponding expansion slot on the back of the computer chassis.
5. Rotate the slot cover release latch to the open position.

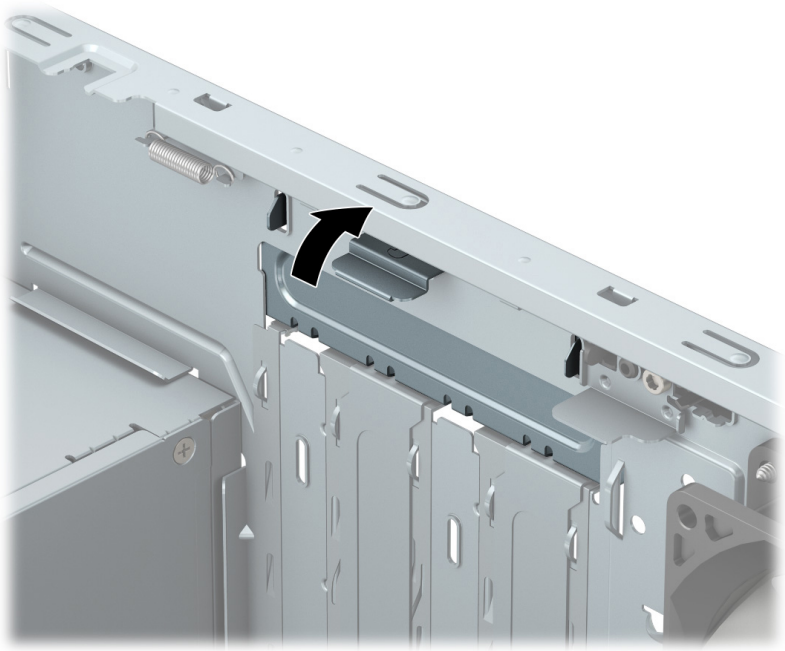

6. Before installing an expansion card, remove the expansion slot cover or the existing expansion card.

NOTE: Before removing an installed expansion card, disconnect any cables that may be attached to the expansion card.

   a. If you are installing an expansion card in a vacant PCI Express x16 socket, remove the appropriate expansion slot cover on the back of the chassis. Pull the slot cover straight up then away from the inside of the chassis.

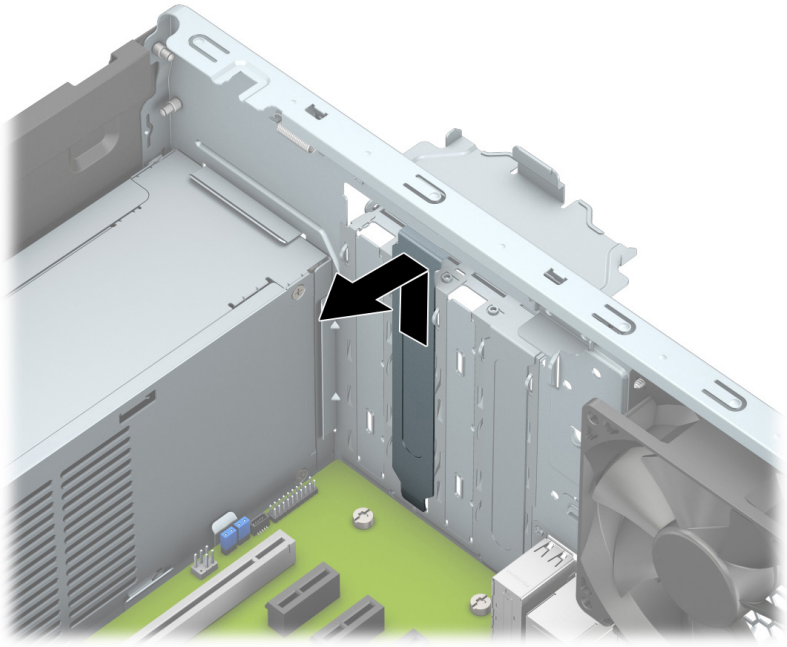

b. If you are installing an expansion card in a vacant PCI Express x1 socket, insert a flatblade screwdriver into the slots on the rear of expansion slot cover **(1)** and rock the slot cover back and forth to break it free from the chassis **(2)**.

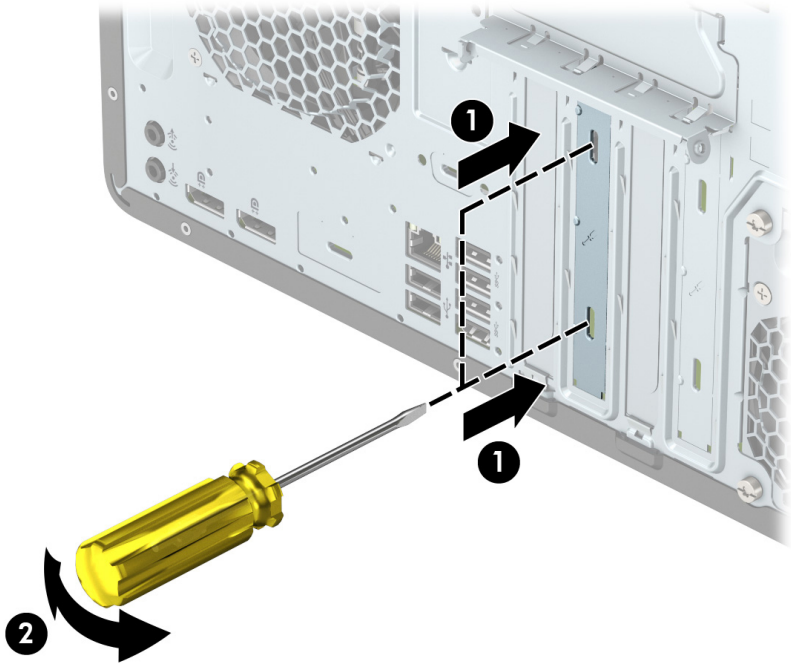

c. If you are installing an expansion card in a vacant PCI Express x16 socket, remove the appropriate expansion slot cover on the back of the chassis. Pull the slot cover straight up then away from the inside of the chassis.

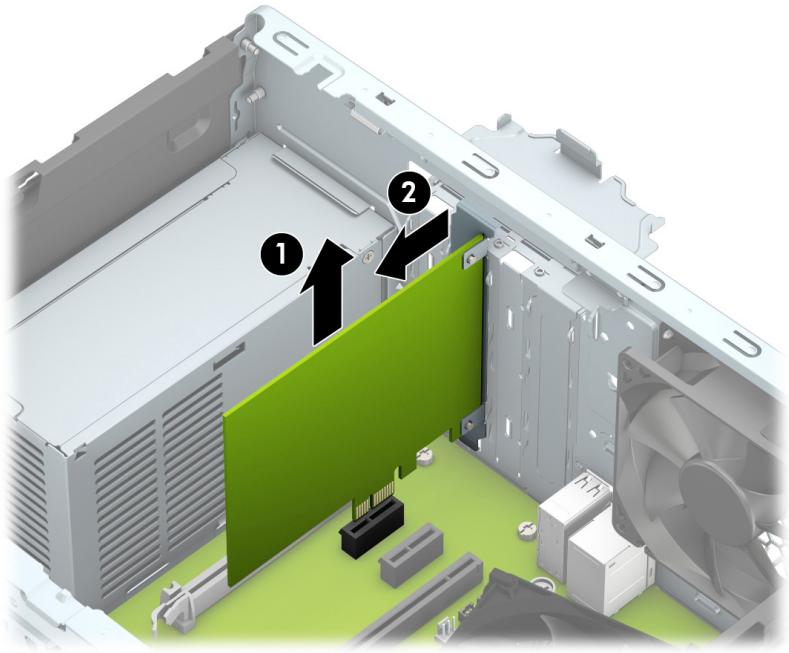

7. Store the removed card in anti-static packaging.
8. If you are not installing a new expansion card, install an expansion slot cover to close the open slot.

⚠ **CAUTION:** After removing an expansion card, you must replace it with a new card or expansion slot cover for proper cooling of internal components during operation.

Reverse this procedure to install an expansion card. Reconfigure the computer, if necessary.

Power supply

Follow these steps to remove the power supply:

1. Prepare the computer for disassembly (see Preparation for disassembly on page 20).
2. Remove the access panel (see Access panel on page 21).
3. Remove the drive cage (see Drive cage on page 36).
4. Position the computer with the rear panel toward you.
5. Disconnect the power supply cables **(1)** from the three power supply cable connectors on the system board.
6. Release the power supply cable from the retention clip **(2)** built into the computer chassis.
7. Release the power supply cable from the two cable tie wraps **(3)**.

NOTE: The cable tie wraps will be destroyed in this step. Replacement cable tie wraps are included in the power supply spare part kit.

8. Remove the three Torx-15 M3.5×9.2 screws **(4)** that secure the power supply to the computer chassis.
9. Slide the power slide forward, and then lift and remove the power supply **(5)**.

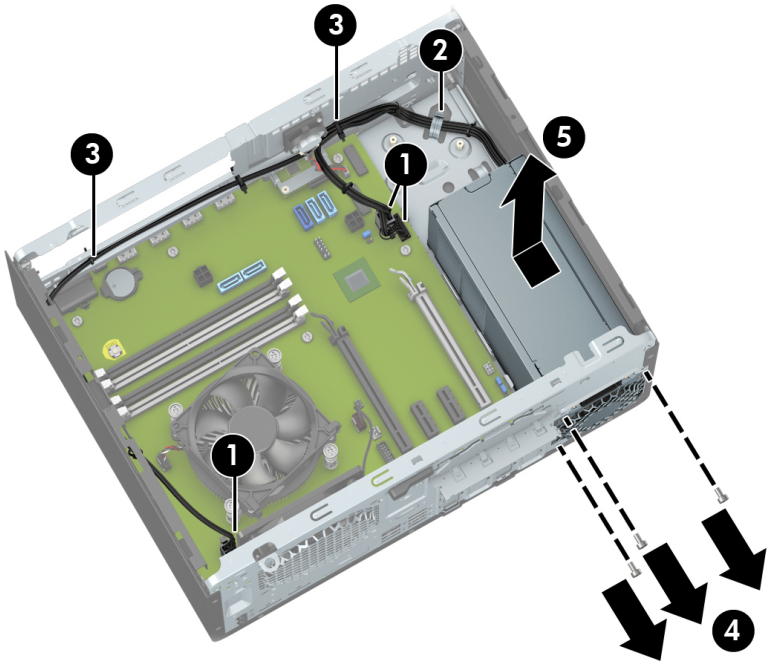

Reverse this procedure to install the power supply.

Fan-sink

NOTE: The fan-sink spare park kit includes replacement thermal material.

Follow these steps to remove the fan-sink:

1. Prepare the computer for disassembly (see Preparation for disassembly on page 20).
2. Remove the access panel (see Access panel on page 21).
3. Remove the drive cage (see Drive cage on page 36).
4. Disconnect the fan-sink cable **(1)** from the system board.
5. Loosen the four slotted Torx-15 captive screws **(2)** that secure the fan-sink to the computer chassis.

   NOTE: Due to the adhesive nature of the thermal material located between the fan-sink and the processor, it may be necessary to move the fan-sink from side to side when removing the it.

6. Remove the fan-sink **(3)**.

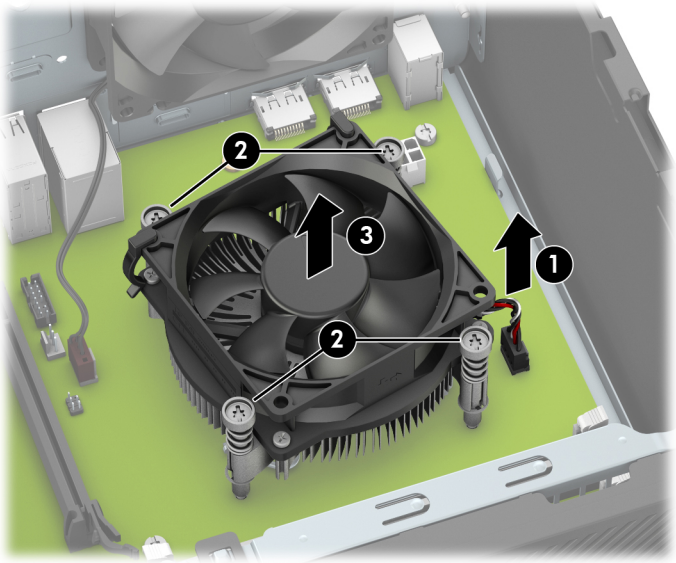

NOTE: The thermal material must be thoroughly cleaned from the surfaces of the fan-sink and the processor each time the fan-sink is removed. Thermal paste is used on the processor **(1)** and the fan-sink section **(2)** that services it.

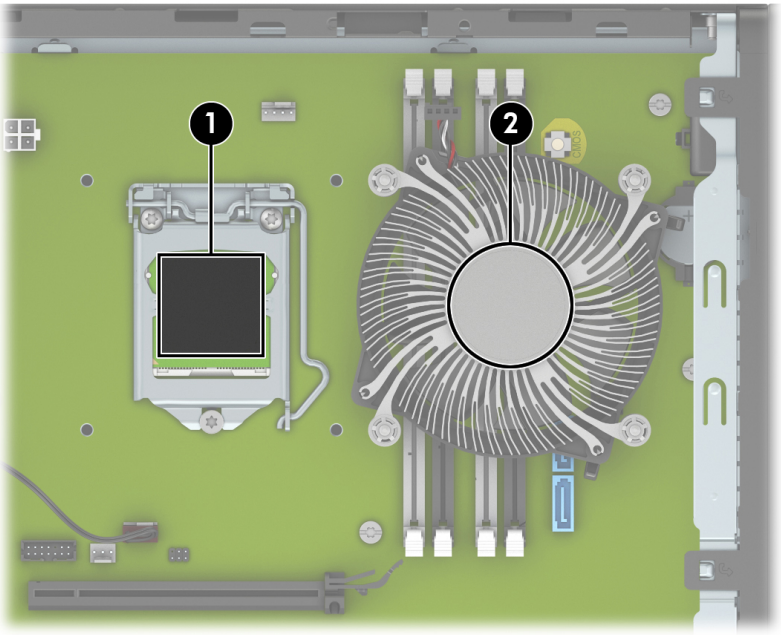

Reverse this procedure to install the fan-sink.

Processor

NOTE: The processor spare park kit includes replacement thermal material.

Follow these steps to remove the processor:

1. Prepare the computer for disassembly (see Preparation for disassembly on page 20).
2. Remove the access panel (see Access panel on page 21).
3. Remove the drive cage (see Drive cage on page 36).
4. Remove the fan-sink (see Fan-sink on page 42).
5. Slide the processor release lever **(1)** to the right until it clears the locking clip.
6. Swing the processor release lever **(2)** up and back as far as it will go.
7. Swing the processor retention bracket **(3)** up and back as far as it will go.
8. Lift the processor **(4)** straight up, and remove it.

NOTE: When installing the processor, the gold triangle **(5)** on the processor must be aligned with the triangle icon **(6)** embossed on the system board.

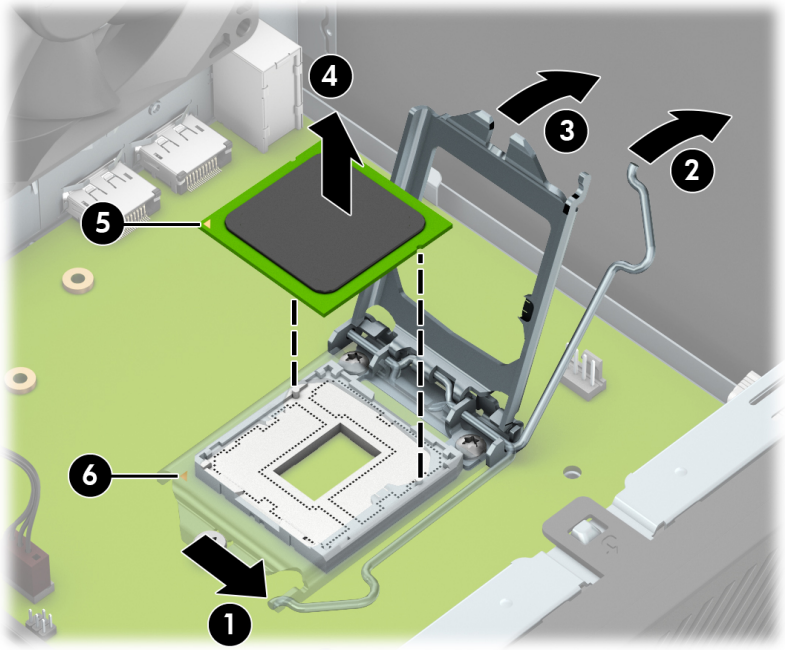

Reverse this procedure to install the processor.

System board

NOTE: The system board spare park kit includes replacement thermal material.

Follow these steps to remove the system board:

1. Prepare the computer for disassembly (see Preparation for disassembly on page 20).
2. Remove the access panel (see Access panel on page 21), and then remove the following components:
   a. Drive cage (see Drive cage on page 36)
   b. Serial port module (see Serial port module on page 28)
   c. Fan-sink (see Fan-sink on page 42)

NOTE: When replacing the system board, be sure that the processor (see Processor on page 44) is removed from the defective system board and installed on the replacement system board.

3. Disconnect the following cables from the system board:

   (1) Power supply cables (from three locations)

   (2) Fan cable

   (3) Speaker cable

   (4) Drive power cables (from two locations)

   (5) Drive SATA cables (from five locations)

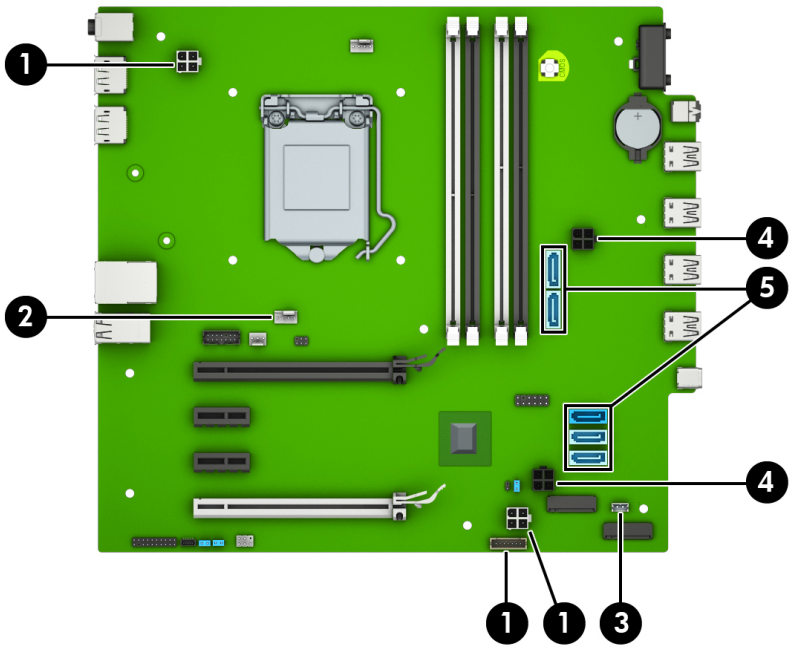

4. Remove the eight Torx-15 M3.3×8.9 screws that secure the system board to the computer chassis.

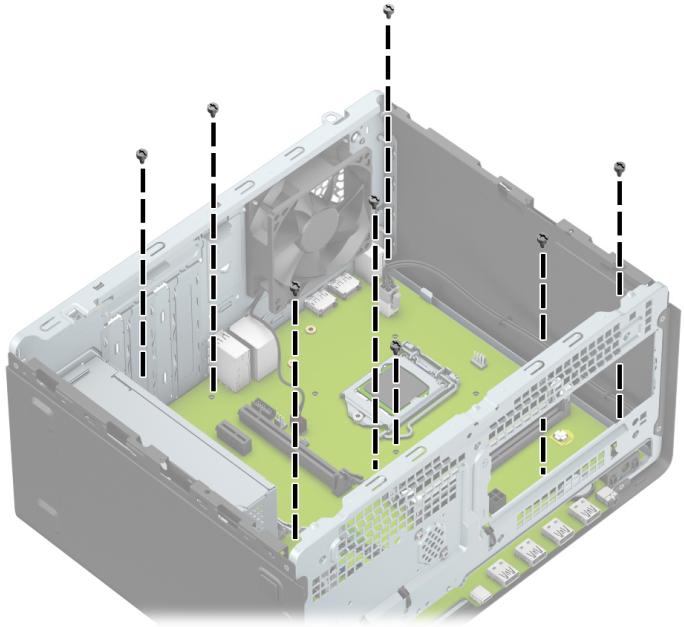

5. Slide the system board **(1)** forward through the opening in the front of the computer chassis.
6. Swing the rear edge of the system board **(2)** up and forward until the components on the rear edge are clear of the rear panel.
7. Remove the system board **(3)** by sliding the rear edge up and back at an angle.

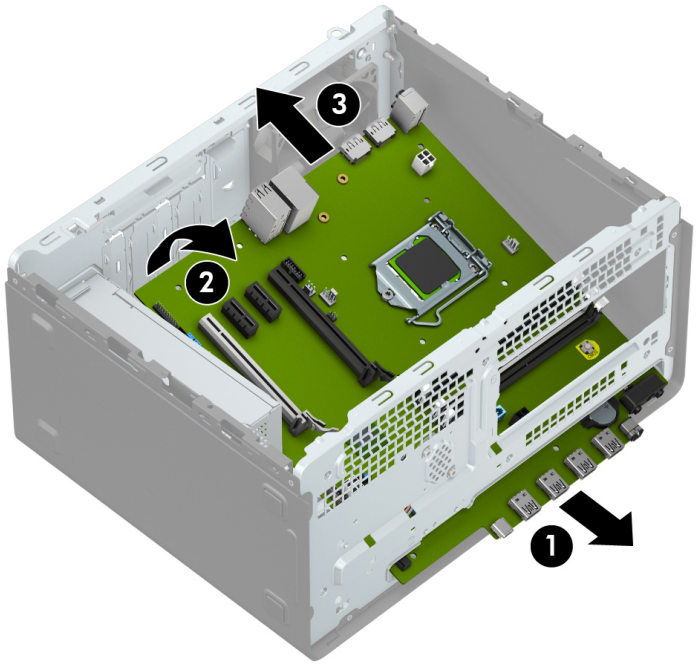

Reverse this procedure to install the system board.

5 Computer Setup (F10) Utility

Computer Setup (F10) Utilities

Use Computer Setup (F10) Utility to do the following:

- Change settings from the defaults or restore the settings to default values.
- View the system configuration, including settings for processor, graphics, memory, audio, storage, communications, and input devices.
- Modify the boot order of bootable devices such as hard drives, optical drives, or USB flash media devices.
- (Windows 7 only) Establish an Ownership Tag, the text of which is displayed each time the system is turned on or restarted.
- Enter the Asset Tag or property identification number assigned by the company to this computer.
- Enable the power-on password prompt during system restarts (warm boots) as well as during power-on.
- Establish an administrator password that controls access to the Computer Setup (F10) Utility and the settings described in this section.
- Establish minimum requirements for valid passwords, including length and required types of characters.
- Secure integrated I/O functionality, including the serial, USB, or audio, or embedded NIC, so that they cannot be used until they are unsecured.
- Enable or disable different types of boot sources.
- Configure features such as Secure Boot, power management, virtualization support, and language and keyboard type used in Setup and POST.
- Replicate the system setup by saving system configuration information on a USB device and restoring it on one or more computers.
- Enable or disable DriveLock security or securely erase a hard drive (when supported by drive).

Using Computer Setup (F10) Utilities

Computer Setup can be accessed only by turning the computer on or restarting the system. To access the Computer Setup Utilities menu, complete the following steps:

1. Turn on or restart the computer.
2. Repeatedly press F10 when the monitor light turns green to access the utility.

   You can also press Esc to a menu that allows you to access different options available at startup, including the Computer Setup utility.

NOTE: If you do not press F10 at the appropriate time, you must restart the computer and again repeatedly press F10 when the monitor light turns green to access the utility.

3. A choice of four headings appears in the Computer Setup Utilities menu: Main, Security, Advanced, and UEFI Drivers.

NOTE: Selecting UEFI Drivers restarts the computer into the 3rd party option ROM management application. You can access this application directly by pressing F3 during startup.

4. Use the arrow (left and right) keys to select the appropriate heading. Use the arrow (up and down) keys to select the option you want, then press Enter. To return to the Computer Setup Utilities menu, press Esc.

5. To apply and save changes, select **Main** > **Save Changes and Exit**.

   - If you have made changes that you do not want applied, select **Ignore Changes and Exit**.
   - To restore settings from the Advanced and Main menus to original values, select **Apply Factory Defaults and Exit**.
   - To restore settings from the Advanced and Main menus to those previously saved by **Save Custom Defaults**, select **Apply Custom Defaults and Exit**. If no custom defaults have been saved, then factory defaults are used.

NOTE: Settings in the **Security** menu are not modified by **Apply Defaults**. Those values are reset by **Restore Security Settings to Default** at the bottom of the **Security** menu.

NOTE: Not all settings shown in the following sections are available for all models

CAUTION: Do NOT turn the computer power OFF while the BIOS is saving the Computer Setup (F10) changes because the settings could become corrupted. It is safe to turn off the computer only after exiting the F10 Setup screen.

Computer Setup–Main

NOTE: Support for specific Computer Setup options may vary depending on the hardware configuration.

Table 5-1 Computer Setup—Main

Option	Description
System Information	Lists all information in following list if **Advanced System Information** is selected. Lists smaller subset if **Basic System Information** is selected. • Product name • Installed memory size • Processor type • Processor cache size (L1/L2/L3) • Processor speed • MicroCode Revision • Processor Stepping • DIMM size (for each installed module) • System BIOS version • ME Firmware version (Intel only) • Video BIOS version • Super I/O Firmware version • Born On Date • Serial Number • SKU number • UUID (Universally Unique Identifier) • Asset Tracking Number • Feature Byte • Build ID • Product Family • System Board ID • System Board CT • Integrated MAC Address
System Diagnostics	If the hard drive has the HP Advanced Diagnostics installed, the application will launch. If HP Advanced Diagnostics is not installed, then a basic version built into the BIOS will provide the capability to perform the following functions: • Memory Test • Hard Drive Check • Language
Update System BIOS	Lets you update the system BIOS from www.hp.com or another network server, from a removable USB drive, or from a file located on the hard drive. • 'Check HP.com for BIOS Updates' or 'Check the Network for BIOS Updates' The string that appears here depends on the setting in 'BIOS Update Preferences'.

Table 5-1 Computer Setup—Main (continued)

Option	Description
	• Lock BIOS Version If this option is checked, the system is locked to the current BIOS version and updates are not allowed. • BIOS Update Preferences Allows the administrator to select the source of network updates (www.hp.com or another network server) and allows configuration of a periodic check for updates, including policies for: ■ Check for updates and prompt the user to accept or reject the update at that time ■ Check for updates and install all new versions ■ Check for updates and install only new versions marked important • Network Configuration Settings • Update BIOS Using Local Media Lets you access files on either USB storage or the hard drive. The HP BIOS Update and Recovery application included in BIOS Softpaqs at www.hp.com will copy the BIOS file to the correct location on the hard drive or USB device.
System IDs	Lets you set the following values: • Asset Tracking Number • Ownership Tag
Replicated Setup	**Backup current settings to USB device** Saves system configuration to a formatted USB flash media device. **Restore current settings from USB device** Restores system configuration from a USB flash media device.
Save Custom Defaults	Saves the current system configuration settings as the custom default set.
Apply Custom Defaults and Exit	Applies the custom default settings to the computer after rebooting. Does not apply to options in the **Security** menu.
Apply Factory Defaults and Exit	Restores the factory system configuration settings to the computer after rebooting. Does not apply to options in the **Security** menu.
Ignore Changes and Exit	Exits Computer Setup without applying or saving any changes.
Save Changes and Exit	Saves changes to current system configuration, exits Computer Setup, and reboots.

Computer Setup—Security

NOTE: Support for specific Computer Setup options may vary depending on the hardware configuration.

Table 5-2 Computer Setup—Security

Option	Description
Set up BIOS Administrator Password	Lets you set and enable a BIOS administrator password, which includes the following privileges: • Manage other BIOS users • Full access to BIOS policy and settings • Unlock the computer when other BIOS users fail the preboot authentication. **NOTE:** Creating a BIOS user disables the Fast Boot option. **NOTE:** If the password is set, it is required to change Computer Setup options, update the BIOS, and make changes to certain plug and play settings under Windows.
Change BIOS Administrator Password (This selection is active only if a BIOS administrator password is set.)	Lets you change the BIOS administrator password. You must know the current password to be able to change it.
Password Policies	Let you set the guidelines for a valid password. Options include: • Password minimum length • Requires at least one symbol • Requires at least one number • Requires at least one upper case character • Requires at least one lower case character • Allow spaces **Clear Password Jumper** Select 'Honor' to allow or 'Ignore' to not allow the absence of the password jumper to clear the passwords at boot up. Default is 'Honor'.
Security Configuration	**TPM Embedded Security** • **TPM Device** Lets you set the Trusted Platform Module as available or hidden. • **TPM State** Select to enable the TPM. • **TPM Clear** Select to reset the TPM to an unowned state. After the TPM is cleared, it is also turned off. To temporarily suspend TPM operations, turn the TPM off instead of clearing it. **CAUTION:** Clearing the TPM resets it to factory defaults and turns it off. You will lose all created keys and data protected by those keys. **BIOS Sure Start** • **Verify Boot Block on every Boot** Select to check validity of boot block region each boot. If not selected, boot block region will be validated on power cycles.

Table 5-2 Computer Setup—Security (continued)

Option	Description
	• **Data Recovery Policy** Select 'Automatic' or 'Manual' to set data recovery policy. 'Manual' lets you select whether or not to execute recovery of a corrupted region if it is detected.
Set Up BIOS Power-On Password	Lets you set and enable a BIOS power-on password. The power-on password prompt appears after a power cycle or reboot. If the user does not enter the correct power-on password, the unit will not boot.
Change BIOS Power-On Password (This selection is active only if a BIOS power-on password is set.)	Lets you change the BIOS power-on password. You must know the current password to be able to change it.
DriveLock	Allows you to assign or modify a master or user password for hard drives. When this feature is enabled, the user is prompted to provide one of the DriveLock passwords during POST. If neither is successfully entered, the hard drive will remain inaccessible until one of the passwords is successfully provided during a subsequent cold-boot sequence. **NOTE:** This selection will only appear when at least one drive that supports the DriveLock feature is attached to the system. **CAUTION:** Be aware that these settings take place immediately. A save is not necessary. **CAUTION:** Be sure to document the DriveLock password. Losing a DriveLock password will render a drive permanently locked. After you select a drive, the following options are available: **Set DriveLock Master Password**. Sets the drive's master password but does not enable DriveLock. **Enable DriveLock**. Sets the drive's user password and enables DriveLock.
Secure Erase	Lets you select a hard drive to completely erase. Once a hard drive has been erased with a program that utilizes Secure Erase firmware commands, no file recovery program, partition recovery program, or other data recovery method will be able to extract data from the drive.
Save/Restore MBR of the system hard drive	**NOTE:** Windows 8.1 and Windows 10 systems are generally not formatted to include an MBR. Instead they use GUID Partition Table (GPT) format, which better supports large hard drives. Enabling this feature will save the Master Boot Record (MBR) of the system hard drive. If the MBR gets changed, the user will be prompted to restore the MBR. Default is disabled. The MBR contains information needed to successfully boot from a disk and to access the data stored on the disk. Master Boot Record Security may prevent unintentional or malicious changes to the MBR, such as those caused by some viruses or by the incorrect use of certain disk utilities. It also allows you to recover the "last known good" MBR, should changes to the MBR be detected when the system is restarted. **NOTE:** Most operating systems control access to the MBR of the current bootable disk; the BIOS cannot prevent changes that may occur while the operating system is running. Restores the backup Master Boot Record to the current bootable disk. Default is disabled. Only appears if all of the following conditions are true: • MBR security is enabled • A backup copy of the MBR has been previously saved • The current bootable disk is the same disk from which the backup copy was saved **CAUTION:** Restoring a previously saved MBR after a disk utility or operating system has modified the MBR, may cause the data on the disk to become inaccessible. Only restore a previously saved MBR if you are confident that the current bootable disk's MBR has been corrupted or infected with a virus.
Smart Cover	**Cover Lock** (Lock/Unlock)

Table 5-2 Computer Setup—Security (continued)

Option	Description
	Default is 'Unlock'. **Cover Removal Sensor** (Disabled/Notify user/Administrator password) Lets you disable the cover sensor or configure what action is taken if the computer cover was removed. Default is 'Disabled'. **NOTE:** **Notify user** alerts the user with a POST error on the first boot after the sensor detects removal of the cover. If the password is set, **Administrator Password** requires that the password be entered to boot the computer if the sensor detects that the cover has been removed.
System Management Command	Allows authorized personnel to reset security settings during a service event. Default is enabled.
Restore Security Settings to Default	This action resets security devices, clears BIOS passwords (not including DriveLock), and restores settings in the **Security menu** to factory defaults.

Computer Setup—Advanced

NOTE: Support for specific Computer Setup options may vary depending on the hardware configuration.

Table 5-3 Computer Setup—Advanced (for advanced users)

Option	Heading
Display Language	Lets you select the language of the menus in F10 Setup and the keyboard layout.
Scheduled Power-On	This feature wakes the system up from a powered off state at a specified date and time.

Boot Options	Select the devices that the computer can boot from, as well as other options, including:
	
	• Startup Menu Delay(sec). Enabling this feature will add a user-specified delay to the POST process. One purpose for the delay is to provide additional time to activate hotkeys such as Esc for the Startup Menu or F10 for Computer Setup.
	• Fast Boot. Default is enabled for Windows 8.1 or later, and disabled for Windows 7 systems.
	• CD-ROM Boot. Default is enabled.
	• Network (PXE) Boot. Default is enabled.
	• Prompt on Memory Size Change. Default is enabled.
	• Prompt on Fixed Storage Change. Default is disabled.
	• After Power Loss. Default is Power Off.
	  ■ Power off—causes the computer to remain powered off when power is restored.
	  ■ Power on—causes the computer to power on automatically as soon as power is restored.
	  ■ Previous state—causes the computer to power on automatically as soon as power is restored, if it was on when power was lost.
	
	NOTE: If the system is configured to 'Power On from Keyboard Ports' (see Power Management Options), then this setting is forced to 'Power On'.
	
	• Audio Alerts During Boot. Default is enabled. When disabled, most audible beeps from errors, warnings, and password prompts during boot up are suppressed.
	• UEFI Boot Order.

Table 5-3 Computer Setup—Advanced (for advanced users) (continued)

Option	Heading
	Default is enabled. Specify the order in which UEFI boot sources (such as a internal hard drive, USB hard drive, USB optical drive, or internal optical drive) are checked for a bootable operating system image. UEFI boot sources always have precedence over legacy boot sources. • Legacy Boot Order Specify the order in which legacy boot sources (such as a network interface card, internal hard drive, USB optical drive, or internal optical drive) are checked for a bootable operating system image. Specify the order of attached hard drives. The first hard drive in the order will have priority in the boot sequence and will be recognized as drive C (if any devices are attached). **NOTE:** To drag a device to a preferred place, press Enter. **NOTE:** MS-DOS drive lettering assignments may not apply after a non-MS-DOS operating system has started. **Shortcut to Temporarily Override Boot Order** To boot **one time** from a device other than the default device specified in Boot Order, restart the computer and press Esc (to access the Startup menu) and then F9 (Boot Menu), or only F9 (skipping the Startup menu) when the monitor light turns green. After POST is completed, a list of bootable devices is displayed. Use the arrow keys to select the preferred bootable device and press Enter. The computer then boots from the selected non-default device for this one time.
Secure Boot Configuration	**Configure Legacy Support and Secure Boot** Legacy Support – Lets you turn off all legacy support on the computer, including booting to DOS, running legacy graphics cards, booting to legacy devices, and so on. Windows 7 for instance requires legacy support, whereas Windows 8 does not. Secure Boot – Lets you make sure an operating system is legitimate before booting to it, making Windows resistant to malicious modification from preboot to full OS booting, preventing firmware attacks. UEFI and Windows Secure Boot only allow code signed by pre-approved digital certificates to run during the firmware and OS boot process. Default is 'Legacy Support Enable and Secure Boot Disable' for Windows 7 and other non-Windows configurations. Default is 'Legacy Support Disable and Secure Boot Enable' for Windows 8.1 and later configurations. **Secure Boot Key Management** Lets you manage the custom key settings. **Clear Secure Boot Keys** Lets you delete any previously loaded custom boot keys. Clearing keys will disable secure boot. Default is disabled. **Reset Secure Boot keys to factory defaults** Default is disabled. **Enable MS UEFI CA key** Disabling this setting alters the Secure Boot key list to further restrict the allowed software components. Set this option to 'disable' to support Device Guard.
System Options	**Configure Storage Controller for RAID** (enable/disable) Lets you enable onboard RAID. Default is disabled. **POST Prompt for RAID Configuration** (Intel only) When disabled, the prompt for 'RAID option ROM' in legacy mode is suppressed. **SVM CPU Virtualization** (AMD only)

Table 5-3 Computer Setup—Advanced (for advanced users) (continued)

Option	Heading
	Controls the virtualization features of the processor. Changing this setting requires turning the computer off and then back on. Default is disabled. **Virtualization Technology (VTx)** (Intel only) Controls the virtualization features of the processor. Changing this setting requires turning the computer off and then back on. Default is disabled. **Virtualization Technology for Directed I/O (VTd)** (Intel only) Controls virtualization DMA remapping features of the chipset. Changing this setting requires turning the computer off and then back on. Default is disabled. **PCI Express Slot x** (enable/disable) Lets you disable individual expansion slots. **Allow PCIe/PCI SERR# Interrupt** (enable/disable) Allows PCI devices to report PCI/PCIe System Error signals, such as address parity errors, data parity errors, and critical errors other than parity. Default is enabled. **Power Button Override** (disable/4 sec/15 sec) Lets you disable or enable and select the number of seconds you have to hold down the power button for it to force the system to power off. Default is '4 sec'.
Built-In Device Options	**Embedded LAN Controller** Select to show the device in the operating system. Default is enabled. **Wake On LAN** Lets you either disable the Wake On LAN feature, or configure where the computer boots, including the network or hard drive. Default is Boot to Network. **Dust Filter** Select to enable the Dust Filter replacement reminder, which can be set for 15, 30, 60, 90, 120, or 180 days. The reminder will show during POST after the reminder timer has expired. **Video Memory Size** Use this option to manage graphics memory allocation. The value you choose is allocated permanently to graphics and is unavailable to the operating system. **Audio Device** Select to show the device in the operating system. Default is enabled. **Internal Speakers** (does not affect external speakers) Clear to disable the chassis speaker or speakers. This function is applicable to normal audio playback in the operating system and does not affect the error or warning beeps during POST. Default is enabled. **Integrated Microphone** Clear to disable the integrated microphone. This does not affect devices plugged into audio jacks. Default is enabled. **Integrated Camera** Clear to disable the integrated webcam. Default is enabled. **Increase Idle Fan Speed(%)** Sets idle fan speed percentage. This setting only changes the minimum fan speed. The fan is still automatically controlled. **Fingerprint Device**

Table 5-3 Computer Setup—Advanced (for advanced users) (continued)

Option	Heading
	Select to show the device in the operating system. Default is enabled. **Touch Panel** Clear to disable the display panel touch feature. Default is enabled.
Port Options	Allows you to hide the following ports from the operating system: • Serial port A • Serial port B • SATA0 • SATA1 • SATA2 • SATA3 • SATA5 • Front USB ports • Rear USB ports • USB charging port function • Media card reader **Restrict USB Devices** Specify the following categories of USB devices to enable: • Allow all USB devices • Allow only keyboard and mouse • Allow all but storage devices and hubs. When some devices are restricted, the system will disable USB ports that do not meet the allowed criteria. This feature is usually combined with similar policies within the operating system since USB devices can be moved to different ports. The ports disabled by the BIOS will remain disabled until the system is restarted.
Option ROM Launch Policy	These policies control whether Legacy Option ROMs or UEFI drivers are loaded. Default is 'All legacy' for Windows 7 and other non-Windows configurations. Default is 'All UEFI' for Windows 8.1 or later. **Configure Option ROM Launch Policy** • All legacy • All UEFI • All UEFI except video
Power Management Options	**Runtime Power Management** (enable/disable) Allows certain operating systems to reduce processor voltage and frequency when the current software load does not require the full capabilities of the processor. Default is enabled. **Extended Idle Power States** (enable/disable) Allows certain operating systems to decrease the processors power consumption when the processor is idle. Default is enabled. **S5 Maximum Power Savings** (enable/disable)

Table 5-3 Computer Setup—Advanced (for advanced users) (continued)

Option	Heading
	Enabling this feature reduces the power of the system as much as possible in the S5 state. Power is removed from the wake up circuitry, the expansion slots, and any management features while in S5. Default is disabled. **SATA Power Management** (enable/disable) Enables or disables SATA bus and/or device power management. Default is enabled. **PCI Express Power Management** (enable/disable) Enabling this option permits the PCI Express links to use Active Power State Management (ASPM) to enter lower power states while not in use. Default is enabled. **Unique Sleep State Blink Rates** (enable/disable) This feature is designed to provide a visual indication of what sleep state the system is in. Each sleep state has a unique blink pattern. Default is disabled. **NOTE:** A normal shutdown goes to the S4 state for Windows 8 or later. S0 (On) = Solid white LED. S3 (Stand By)= 3 blinks at 1Hz (50% duty cycle) followed by a pause of 2 seconds (white LED) — repeated cycles of 3 blinks and a pause. S4 (Hibernation)= 4 blinks at 1Hz (50% duty cycle) followed by a pause of 2 seconds (white LED) — repeated cycles of 4 blinks and a pause. S5 (Soft Off) = LED is off. **Power On from Keyboard Ports** (enable/disable) When enabled, this feature allows a key press to power on the system when it is off (S5 state). If using a USB keyboard, it must be plugged into one of the rear ports labeled with the keyboard icon. Default is disabled.
Remote Management Options	**Active Management (AMT)** (Intel only) (enable/disable). Default is enabled. Allows you to discover, repair, and protect networked computing devices. **USB Key Provisioning Support** (enable/disable) Default is disabled. **USB Redirection Support** (enable/disable). Default is enabled. USB redirection allows USB devices plugged into a client computer to be transparently redirected to the guest operating system. **Unconfigure AMT on next boot** (Do Not Apply/Apply). Default is 'Do Not Apply'. **SOL Terminal Emulation Mode** (ANSI / VT100). Default is ANSI. SOL terminal emulation mode is only activated during remote AMT redirection operations. The emulation options allow administrators to select which mode works best with their console. **Show Unconfigure ME Confirmation Prompt** (enable/disable). Default is enabled. **Verbose Boot Messages** (enable/disable). Default is enabled. Verbose boot shows additional logging information during the boot. mainly for debugging if something goes wrong during bootup. **Watchdog Timer** (enable/disable). Default is enabled. Allows you to set amount of time for a operating system and BIOS watchdog alert to be sent if the timers are not deactivated. BIOS watchdog is deactivated by BIOS and would indicate that a halt occurred during execution if the alert is sent to the management console. An operating system alert is deactivated by the operating system image and would indicate that a hang occurred during its initialization. • OS Watchdog Timer (min.) – (5/10/15/20/25). Default is 5 min.

Table 5-3 Computer Setup—Advanced (for advanced users) (continued)

Option	Heading
	• BIOS Watchdog Timer (min.) – (5/10/15/20/25). Default is 5 min. **CIRA Timeout (min.)** (1/2/3/4/Never) CIRA is Customer Initiated Remote Assistance, an Intel service to help users employing Active Management Technology (AMT).

Recovering the Configuration Settings

This method of recovery requires that you first perform the **Save to Removable Media** command with the Computer Setup (F10) Utility before **Restore** is needed. (See Computer Setup–Main on page 49 in the Computer Setup—File table.)

The **Save to Removable Media** option creates a file named HPSETUP.TXT on an inserted USB flash media device. This file can be edited to change the settings on Restore. An asterisk (*) marks the selected option for a setting.

NOTE: It is recommended that you save any modified computer configuration settings to a USB flash media device and save the device for possible future use.

To restore the configuration, insert the USB flash media device with the saved configuration and perform the **Restore from Removable Media** command with the Computer Setup (F10) Utility. (See Computer Setup–Main on page 49 in the Computer Setup—File table.)

6 Troubleshooting without diagnostics

This chapter provides information on how to identify and correct minor problems, such as USB devices, hard drive, graphics, audio, memory, and software problems. If you encounter problems with the computer, refer to the tables in this chapter for probable causes and recommended solutions.

NOTE: For information on specific error messages that may appear on the screen during Power-On Self-Test (POST) at startup, refer to POST error messages and diagnostic front panel LEDs and audible codes on page 89.

Safety and comfort

WARNING! Misuse of the computer or failure to establish a safe and comfortable work environment may result in discomfort or serious injury. Refer to the *Safety & Comfort Guide* at http://www.hp.com/ergo for more information on choosing a workspace and creating a safe and comfortable work environment. For more information, refer to the *Safety & Regulatory Information* guide.

Before you call for technical support

If you are having problems with the computer, try the appropriate solutions below to try to isolate the exact problem before calling for technical support.

- Run the HP diagnostic tool.
- Run the hard drive self-test in Computer Setup. Refer to Computer Setup (F10) Utility on page 47 for more information.
- Check the Power LED on the front of the computer to see if it is flashing red. The flashing lights are error codes that will help you diagnose the problem. Refer to POST error messages and diagnostic front panel LEDs and audible codes on page 89 for more information.
- If the screen is blank, plug the monitor into a different video port on the computer if one is available. Or, replace the monitor with a monitor that you know is functioning properly.
- If you are working on a network, plug another computer with a different cable into the network connection. There may be a problem with the network plug or cable.
- If you recently added new hardware, remove the hardware and see if the computer functions properly.
- If you recently installed new software, uninstall the software and see if the computer functions properly.
- Boot the computer to the Safe Mode to see if it will boot without all of the drivers loaded. When booting the operating system, use “Last Known Configuration.”
- Refer to the comprehensive online technical support at http://www.hp.com/support.
- Refer to Helpful hints on page 60 in this guide.

To assist you in resolving problems online, HP Instant Support Professional Edition provides you with self-solve diagnostics. If you need to contact HP support, use HP Instant Support Professional Edition's online chat feature. Access HP Instant Support Professional Edition at: http://www.hp.com/go/ispe.

Access the Business Support Center (BSC) at http://www.hp.com/go/bizsupport for the latest online support information, software and drivers, proactive notification, and worldwide community of peers and HP experts.

If it becomes necessary to call for technical assistance, be prepared to do the following to ensure that your service call is handled properly:

- Be in front of your computer when you call.
- Write down the computer serial number, product ID number, and monitor serial number before calling.
- Spend time troubleshooting the problem with the service technician.
- Remove any hardware that was recently added to your system.
- Remove any software that was recently installed.
- Restore the system from the Recovery Disc Set that you created or restore the system to its original factory condition in System Software Requirement Disks (SSRD).

CAUTION: Restoring the system will erase all data on the hard drive. Be sure to back up all data files before running the restore process.

NOTE: For sales information and warranty upgrades (Care Packs), call your local authorized service provider or dealer.

Helpful hints

If you encounter problems with the computer, monitor, or software, see the following list of general suggestions before taking further action:

- Check that the computer and monitor are plugged into a working electrical outlet.
- Check that the voltage select switch (some models) is set to the appropriate voltage for your region (115V or 230V).
- Check that the computer is turned on and the white power light is on.
- Check that the monitor is turned on and the green monitor light is on.
- Check the Power LED on the front of the computer to see if it is flashing red. The flashing lights are error codes that will help you diagnose the problem. Refer to POST error messages and diagnostic front panel LEDs and audible codes on page 89 for more information.
- Turn up the brightness and contrast controls of the monitor if the monitor is dim.
- Press and hold any key. If the system beeps, then the keyboard should be operating correctly.
- Check all cable connections for loose connections or incorrect connections.
- Wake the computer by pressing any key on the keyboard or pressing the power button. If the system remains in suspend mode, shut down the computer by pressing and holding the power button for at least four seconds then press the power button again to restart the computer. If the system will not shut down, unplug the power cord, wait a few seconds, then plug it in again. The computer will restart if it is set to power on automatically as soon as power is restored in Computer Setup. If it does not restart, press the power button to start the computer.
- Reconfigure the computer after installing a non-plug and play expansion board or other option. See Solving hardware installation problems on page 79 for instructions.
- Be sure that all the needed device drivers have been installed. For example, if you are using a printer, you need a driver for that model printer.
- Remove all bootable media (CD/DVD or USB device) from the system before turning it on.

- If you have installed an operating system other than the factory-installed operating system, check to be sure that it is supported on the system.
- If the system has multiple video sources (embedded, PCI, or PCI-Express adapters) installed (embedded video on some models only) and a single monitor, the monitor must be plugged into the monitor connector on the source selected as the primary VGA adapter. During boot, the other monitor connectors are disabled and if the monitor is connected into these ports, the monitor will not function. You can select which source will be the default VGA source in Computer Setup.

⚠ **CAUTION:** When the computer is plugged into an AC power source, there is always voltage applied to the system board. You must disconnect the power cord from the power source before opening the computer to prevent system board or component damage.

Solving general problems

You may be able to easily resolve the general problems described in this section. If a problem persists and you are unable to resolve it yourself or if you feel uncomfortable about performing the operation, contact an authorized dealer or reseller.

⚠ **WARNING!** When the computer is plugged into an AC power source, voltage is always applied to the system board. To reduce the risk of personal injury from electrical shock and/or hot surfaces, be sure to disconnect the power cord from the wall outlet and allow the internal system components to cool before touching.

Cannot access the Computer Setup (F10) Utility when booting the computer.

Cause	Solution
The Computer Setup (F10) Utility is set to “fast boot” causing the F10 access screen to display too briefly when booting the computer.	Before turning on the computer, press and hold F10. Turn on the computer and continue to hold F10 until the Computer Setup (F10) Utility is displayed. - or – Follow the Windows instructions for rebooting the computer into the Computer Setup (F10) Utility.

Computer appears locked up and will not turn off when the power button is pressed.

Cause	Solution
Software control of the power switch is not functional.	1. Press and hold the power button for at least four seconds until the computer turns off. 2. Disconnect the power cord from the electrical outlet.

Computer will not respond to keyboard or mouse.

Cause	Solution
Computer is in Sleep state.	To resume from Sleep state, press the power button. **CAUTION:** When attempting to resume from Sleep state, do not hold down the power button for more than four seconds. Otherwise, the computer will shut down and you will lose any unsaved data.
System has locked up.	Restart computer.

Computer date and time display is incorrect.

Cause	Solution
RTC (real-time clock) battery may need to be replaced. **NOTE:** Connecting the computer to a live AC outlet prolongs the life of the RTC battery.	Reset the date and time under **Control Panel** (Computer Setup can also be used to update the RTC date and time). If the problem persists, replace the RTC battery. See the Removal and Replacement section for instructions on installing a new battery, or contact an authorized dealer or reseller for RTC battery replacement. To access Control Panel in Windows 7, select **Start**, and then select **Control Panel**. To access Control Panel in Windows 10, type `control panel` in the taskbar search box, and then select Control Panel.

There is no sound or sound volume is too low.

Cause	Solution
System volume may be set low or muted.	1. Check the Computer Setup settings to make sure the internal system speaker is not muted (this setting does not affect the external speakers). 2. Make sure the external speakers are properly connected and powered on and that the speakers' volume control is set correctly. 3. Use the system volume control available in the operating system to make sure the speakers are not muted or to increase the volume.

Cannot remove computer cover or access panel.

Cause	Solution
Smart Cover Lock, featured on some computers, is locked.	Unlock the Smart Cover Lock using Computer Setup. In case of forgotten password, power loss, or computer malfunction, you must manually disable the Smart Cover lock . A key to unlock the Smart Cover Lock is not available from HP. Keys are typically available from a hardware store.

Poor performance.

Cause	Solution
Processor is too hot.	1. Make sure airflow to the computer is not blocked. Leave a 10.2-cm (4-inch) clearance on all vented sides of the computer and above the monitor to permit the required airflow. 2. Make sure fans are connected and working properly (some fans only operate when needed). 3. Make sure the processor heat sink is installed properly.
Hard drive is full.	Transfer data from the hard drive to create more space on the hard drive.

Poor performance.

Cause	Solution
Low on memory.	Add more memory.
Hard drive fragmented.	Defragment hard drive.
Program previously accessed did not release reserved memory back to the system.	Restart the computer.
Virus resident on the hard drive.	Run virus protection program.
Too many applications running.	1. Close unnecessary applications to free up memory. 2. Add more memory. 3. Some applications run in the background and can be closed by right-clicking on their corresponding icons in the task tray. To prevent these applications from launching at startup: In Windows 7: a. Go to **Start** > **All Programs** > **Accessories** > **Run** b. Type `msconfig`, and then press Enter. c. On the **Startup** tab of the System Configuration Utility, clear applications that you do not want to launch automatically, and the click **OK**. In Windows 10: a. Type `msconfig` in the taskbar search box, and then select **msconfig**. b. On the **Startup** tab of the System Configuration Utility, click **Open Task Manager**. c. Select applications that you do not want to launch automatically, and the click **Disable**.
Some software applications, especially games, are stressful on the graphics subsystem.	1. Lower the display resolution for the current application or consult the documentation that came with the application for suggestions on how to improve performance by adjusting parameters in the application. 2. Add more memory. 3. Upgrade the graphics solution.
Cause unknown.	Restart the computer.

Computer powered off automatically and the Power LED flashes red four times and then white two times.

Cause	Solution
Processor thermal protection activated: A fan may be blocked or not turning. OR The heat sink is not properly attached to the processor.	1. Ensure that the computer air vents are not blocked and the processor cooling fan is running. 2. Open the access panel, press the power button, and see if the processor fan (or other system fan) spins. If the fan does not spin, make sure the fan cable is plugged onto the system board header. 3. If fan a plugged in and not spinning, replace it.

System does not power on and the LEDs on the front of the computer are not flashing.

Cause	Solution
System unable to power on.	Press and hold the power button for less than 4 seconds. If the hard drive LED turns white, then: 1. If equipped with a voltage selector, check that the voltage selector (located on the rear of the power supply) is set to the appropriate voltage. Proper voltage setting depends on your region. 2. Remove the expansion cards one at a time until the 5V_aux light on the system board turns on. 3. Replace the system board. OR Press and hold the power button for less than 4 seconds. If the hard drive LED does not turn on white then: 1. Check that the unit is plugged into a working AC outlet. 2. Open the access panel and check that the power button cable is properly connected to the system board. 3. Check that the power supply cables are properly connected to the system board. 4. Check to see if the 5V_aux light on the system board is turned on. If it is turned on, then replace the power button assembly. 5. If the 5V_aux light on the system board is off, then replace the power supply. 6. Replace the system board.

Solving power problems

Common causes and solutions for power problems are listed in the following table.

Power supply shuts down intermittently.

Cause	Solution
If equipped with a voltage selector, voltage selector switch on rear of computer chassis (some models) not switched to correct line voltage (115V or 230V).	Select the proper AC voltage using the selector switch.
Power supply will not turn on because of internal power supply fault.	Replace the power supply.

Computer powered off automatically and the Power LED flashes red two times, once every second, followed by a two second pause, and the computer beeps two times. (Beeps stop after fifth iteration but LEDs continue flashing.) Computer powered off automatically and the Power LED flashes red four times and then white two times.

Cause	Solution
Processor thermal protection activated: A fan may be blocked or not turning. OR The heat sink is not properly attached to the processor.	1. Ensure that the computer air vents are not blocked and the processor cooling fan is running. 2. Open the access panel, press the power button, and see if the processor fan (or other system fan) spins. If the fan does not spin, make sure the fan cable is plugged onto the system board header. 3. If fan a plugged in and not spinning, replace it.

Power LED flashes red four times, once every second, followed by a two second pause, and the computer beeps four times. (Beeps stop after fifth iteration but LEDs continue flashing.) Computer powered off automatically and the Power LED flashes red three times and then white four times.

Cause	Solution
Power failure (power supply is overloaded).	1. If equipped with a voltage selector, check that the voltage selector, located on the rear of the power supply (some models), is set to the appropriate voltage. Proper voltage setting depends on your region. 2. Open the access panel and ensure the power supply cable is seated into the connector on the system board. 3. Check if a device is causing the problem by removing ALL attached devices (such as hard drives or optical drives). Power on the system. If the system enters POST, then power off and replace one device at a time and repeat this procedure until failure occurs. Replace the device that is causing the failure. Continue adding devices one at a time to ensure all devices are functioning properly. 4. Replace the power supply. 5. Replace the system board.

Solving hard drive problems

Hard drive error occurs.

Cause	Solution
Hard disk has bad sectors or has failed.	1. In Windows 7, click **Start**, click **Computer**, and right-click on a drive. Select **Properties**, and then select the **Tools** tab. Under **Error-checking** click **Check Now**. In Windows 10, type `file` in the taskbar search box, and then select **File Explorer** from the list of applications. In the left column, expand **This PC**, right-click on a drive, select **Properties**, and then select the **Tools** tab. Under **Error checking** click **Check**. 2. Use a utility to locate and block usage of bad sectors. If necessary, reformat the hard disk.

Disk transaction problem.

Cause	Solution
Either the directory structure is bad or there is a problem with a file.	In Windows 7, click **Start**, expand **Computer**, and right-click on a drive. Select **Properties**, and then select the **Tools** tab. Under **Error-checking** click **Check Now**. In Windows 10, type `file` in the taskbar search box, and then select **File Explorer** from the list of applications. In the left column, expand **This PC**, right-click on a drive, select **Properties**, and then select the **Tools** tab. Under **Error checking** click **Check**.

Drive not found (identified).

Cause	Solution
Cable could be loose.	Check cable connections.
The system may not have automatically recognized a newly installed device.	See reconfiguration directions in the Solving hardware installation problems on page 79 section. If the system still does not recognize the new device, check to see if the device is listed within Computer Setup. If it is listed, the probable cause is a driver problem. If it is not listed, the probable cause is a hardware problem. If this is a newly installed drive, run the Computer Setup utility and try adding a POST delay under **Advanced** > **Boot Options**.
The device is attached to a SATA port that has been hidden in Computer Setup.	Run the Computer Setup utility and ensure **Device Available** is selected for the device's SATA port in **Advanced** > **Port Options**.
Drive responds slowly immediately after power-up.	Run Computer Setup and increase the POST Delay in **Advanced** > **Boot Options**.

Nonsystem disk/NTLDR missing message.

Cause	Solution
The system is trying to start from the hard drive but the hard drive may have been damaged.	▲ Perform Drive Protection System (DPS) testing in system ROM.
System files missing or not properly installed.	1. Insert bootable media and restart the computer. 2. Boot to the windows installation media and select the recovery option. If only a restore kit is available, then select the **File Backup Program** option, and then restore the system. 3. Install system files for the appropriate operating system.
Hard drive boot has been disabled in Computer Setup.	Run the Computer Setup utility and enable the hard drive entry in the **Advanced** > **Boot Options** list.
Bootable hard drive is not attached as first in a multi-hard drive configuration.	If attempting to boot from a hard drive, ensure it is attached to the system board dark blue SATA connector.
Bootable hard drive is not listed first in the Boot Order.	Run the Computer Setup utility and select **Advanced** > **Boot Options** and ensure the bootable hard drive is listed immediately under the **Hard Drive** entry.

Computer will not boot from hard drive.

Cause	Solution
The device is attached to a SATA port that has been hidden in Computer Setup.	1. Check SATA cable connections. 2. Run the Computer Setup utility and ensure **Device Available** is selected for the device's SATA port in **Advanced** > **Port Options**.
Boot order is not correct.	Run the Computer Setup utility and change boot sequence in **Advanced** > **Boot Options**.
Hard drive is damaged.	Observe if the front panel Power LED is blinking RED and if any beeps are heard. See POST error messages and diagnostic front panel LEDs and audible codes on page 89 to determine possible causes for the blinking red and beep codes. See the Worldwide Limited Warranty for terms and conditions.

Computer seems to be locked up.

Cause	Solution
Program in use has stopped responding to commands.	1. Use the task manager to close programs that do not respond. 2. Attempt the normal Windows “Shut Down” procedure. If this fails, press the power button for four or more seconds to turn off the power. To restart the computer, press the power button again.

Solving media card reader problems

Media card will not work in a digital camera after formatting it in Windows.

Cause	Solution
By default, Windows will format any media card with a capacity greater than 32MB with the FAT32 format. Some digital cameras use the FAT (FAT16 & FAT12) format and can not operate with a FAT32 formatted card.	Either format the media card in the digital camera or select FAT file system to format the media card in a computer with Windows.

A write-protected or locked error occurs when attempting to write to the media card.

Cause	Solution
Media card is locked. Locking the media card is a safety feature that prevents writing to and deleting from an SD/Memory Stick/PRO card.	If using an SD card, make sure that the lock tab located on the right of the SD card is not in the locked position. If using a Memory Stick/PRO card, make sure that the lock tab located on the bottom of the Memory Stick/PRO card is not in the locked position.

Can not write to the media card.

Cause	Solution
The media card is a read-only memory (ROM) card.	Check the manufacturer's documentation included with your card to see if it writable. Refer to the previous section for a list of compatible cards.
Media card is locked. Locking the media card is a safety feature that prevents writing to and deleting from an SD/Memory Stick/PRO card.	If using an SD card, make sure that the lock tab located on the right of the SD card is not in the locked position. If using a Memory Stick/PRO card, make sure that the lock tab located on the bottom of the Memory Stick/PRO card is not in the locked position.

Unable to access data on the media card after inserting it into a slot.

Cause	Solution
The media card is not inserted properly, is inserted in the wrong slot, or is not supported.	Ensure that the card is inserted properly with the gold contact on the correct side. The green LED will light if inserted properly.

Do not know how to remove a media card correctly.

Cause	Solution
The computer's software is used to safely eject the card.	In Windows 7, click **Start**, select **Computer**, right-click on the corresponding drive icon, and then select **Eject**. Pull the card out of the slot. In Windows 10, type `file` in the taskbar search box, and then select **File Explorer** from the list of applications. In the left column, expand **This PC**, right-click on the corresponding drive icon, and then select **Eject**. Pull the card out of the slot.

Do not know how to remove a media card correctly.

Cause	Solution
	NOTE: Never remove the card when the green LED is flashing

After installing the media card reader and booting to Windows, the reader and the inserted cards are not recognized by the computer.

Cause	Solution
The operating system needs time to recognize the device if the reader was just installed into the computer and you are turning the PC on for the first time.	Wait a few seconds so that the operating system can recognize the reader and the available ports, and then recognize the media inserted in the reader.

After inserting a media card in the reader, the computer attempts to boot from the media card.

Cause	Solution
The inserted media card has boot capability.	1. If you do not want to boot from the media card, remove it during boot or do not select the option to boot from the inserted media card during the boot process. 2. During POST (Power On Self-Test), press F9 to modify the boot menu. 3. Change the boot sequence in F10 Computer Setup.

Solving display problems

If you encounter display problems, see the documentation that came with the monitor and to the common causes and solutions listed in the following table.

Blank screen (no video).

Cause	Solution
Monitor is not turned on and the monitor light is not on.	Turn on the monitor and check that the monitor light is on.
Bad monitor.	Try a different monitor.
The cable connections are not correct.	Check the cable connection from the monitor to the computer and to the electrical outlet.
You may have a screen blanking utility installed or energy saver features are enabled.	Press any key or click the mouse button and type your password (if set).
System ROM is corrupted; system is running in Boot Block Emergency Recovery Mode (indicated by eight beeps).	Reflash the system ROM with the latest BIOS image.
You are using a fixed-sync monitor and it will not sync at the resolution chosen.	Be sure that the monitor can accept the same horizontal scan rate as the resolution chosen.
Computer is in Sleep state.	Press the power button to resume from Sleep state. **CAUTION:** When attempting to resume from Sleep state, do not hold down the power button for more than four seconds. Otherwise, the computer will shut down and you will lose any unsaved data.

Blank screen (no video).

Cause	Solution
Monitor cable is plugged into the wrong connector.	Systems may have a monitor connection on both the motherboard or an add-in card. Try moving the monitor connection to a different connector on the back of the computer
Monitor settings in the computer are not compatible with the monitor.	1. In Control Panel, select **Category** from the **View by** list, then under **Appearance and Personalization**, select **Adjust screen resolution**. To access Control Panel in Windows 7, click **Start**, and then select **Control Panel**. To access Control Panel in Windows 10, type `control panel` in the taskbar search box, and then select **Control Panel** from the list of applications. 2. Expand the **Resolution** box, and then use the sliding control to reset the resolution.
Monitor is configured to use an input that is not active.	Use the monitor's on-screen menu controls to select the input that is being driven by the system. Refer to the monitor's user documentation for more information on the on-screen controls and settings.

Blank screen and the power LED flashes Red five times, once every second, followed by a two second pause, and the computer beeps five times. (Beeps stop after fifth iteration but LEDs continue flashing.)

Cause	Solution
Pre-video memory error.	1. Reseat DIMMs. Power on the system. 2. Replace DIMMs one at a time to isolate the faulty module. 3. Replace third-party memory with HP memory. 4. Replace the system board.

Blank screen and the power LED flashes Red six times, once every second, followed by a two second pause, and the computer beeps six times. (Beeps stop after fifth iteration but LEDs continue flashing.)

Cause	Solution
Pre-video graphics error.	For systems with a graphics card: 1. Reseat the graphics card (if applicable). Power on the system. 2. Replace the graphics card (if applicable). 3. Replace the system board. For systems with integrated graphics, replace the system board.

Blank screen and the power LED flashes Red seven times, once every second, followed by a two second pause, and the computer beeps seven times. (Beeps stop after fifth iteration but LEDs continue flashing.)

Cause	Solution
System board failure (ROM detected failure prior to video).	Replace the system board.

Monitor does not function properly when used with energy saver features.

Cause	Solution
Monitor without energy saver capabilities is being used with energy saver features enabled.	Disable monitor energy saver feature.

Dim characters.

Cause	Solution
The brightness and contrast controls are not set properly.	Adjust the monitor brightness and contrast controls.
Cables are not properly connected.	Check that the graphics cable is securely connected to the graphics card (if applicable) or video connector and the monitor.

Blurry video or requested resolution cannot be set.

Cause	Solution
If the graphics controller was upgraded, the correct graphics drivers may not be loaded.	Install the video drivers included in the upgrade kit.
Monitor is not capable of displaying requested resolution.	Change requested resolution.
Graphics card is bad.	Replace the graphics card.

The picture is broken up, rolls, jitters, or flashes.

Cause	Solution
The monitor connections may be incomplete or the monitor may be incorrectly adjusted.	1. Be sure the monitor cable is securely connected to the computer. 2. In a two-monitor system or if another monitor is in close proximity, be sure the monitors are not interfering with each other's electromagnetic field by moving them apart. 3. Fluorescent lights or fans may be too close to the monitor.
Monitor needs to be degaussed.	Degauss the monitor. Refer to the documentation that came with the monitor for instructions.

Image is not centered.

Cause	Solution
Position may need adjustment.	Press the monitor's Menu button to access the OSD menu. Select **ImageControl/ Horizontal Position** or **Vertical Position** to adjust the horizontal or vertical position of the image.

“No Connection, Check Signal Cable” displays on screen.

Cause	Solution
Monitor video cable is disconnected.	Connect the video cable between the monitor and computer. **CAUTION:** Ensure that the computer power is off while connecting the video cable.

“Out of Range” displays on screen.

Cause	Solution
Video resolution and refresh rate are set higher than what the monitor supports.	Restart the computer and enter Safe Mode. Change the settings to a supported setting then restart the computer so that the new settings take effect. To enter Safe Mode in Windows 7: 1. Restart the computer. 2. Press and hold the F8 key as your computer restarts, before the Windows logo appears. If the Windows logo appears, you must restart the computer and try again. 3. On the Advanced Boot Options screen, use the arrow keys to highlight the safe mode option you want, and then press Enter. 4. Log on to your computer with a user account that has administrator rights. When your computer is in safe mode, **Safe Mode** displays in the corners of your monitor. To exit safe mode, restart your computer and let Windows start normally. To enter Safe Mode in Windows 10: 1. Log into the computer using an Administrator account. 2. Type `msconfig` in the taskbar search box, and then select **msconfig** from the list of applications. 3. Click the **Boot** tab, select **Safe boot** and then click **OK**.

High pitched noise coming from inside a flat panel monitor.

Cause	Solution
Brightness and/or contrast settings are too high.	Lower brightness and/or contrast settings.

Fuzzy focus; streaking, ghosting, or shadowing effects; horizontal scrolling lines; faint vertical bars; or unable to center the picture on the screen (flat panel monitors using an analog VGA input connection only).

Cause	Solution
Flat panel monitor's internal digital conversion circuits may be unable to correctly interpret the output synchronization of the graphics card.	1. Select the monitor's Auto-Adjustment option in the monitor's on-screen display menu. 2. Manually synchronize the Clock and Clock Phase on-screen display functions. To download a SoftPaq that will assist you with the synchronization, go to the following Web site, select the appropriate monitor, and download either SP32347 or SP32202: http://www.hp.com/support
Graphics card is not seated properly or is bad (some models).	1. Reseat the graphics card. 2. Replace the graphics card.

Certain typed symbols do not appear correct.

Cause	Solution
The font you are using does not support that particular symbol.	Use the Character Map to locate and select the appropriate symbol. You can copy the symbol from the Character Map into a document. In Windows 7, click **Start**, select **All Programs**, select **Accessories**, select **System Tools**, and then select **Character Map**. In Windows 10, type `ch` in the taskbar search box, and then select **Character Map** from the list of applications.

Solving audio problems

If the computer has audio features and you encounter audio problems, see the common causes and solutions listed in the following table.

Sound cuts in and out.

Cause	Solution
Processor resources are being used by other open applications.	Shut down all open processor-intensive applications.

Sound does not come out of the speaker or headphones.

Cause	Solution
Software volume control is turned down or muted.	Double-click the **Speaker** icon on the taskbar, then make sure that **Mute** is not selected and use the volume slider to adjust the volume.
Audio is hidden in Computer Setup.	Enable the audio in Computer Setup: **Advanced** > **Built-in Device Options**.
The external speakers are not turned on.	Turn on the external speakers.
The audio device may be connected to the wrong jack.	Ensure that the device is connected to the correct jack on the computer. The rear audio jack output is the green receptacle.

Sound does not come out of the speaker or headphones.

Cause	Solution
	The speakers should be plugged into the line-out jack and the headphones should be plugged into the headphone jack.
External speakers plugged into the wrong audio jack on a recently installed sound card.	See the sound card documentation for proper speaker connection. The rear audio jack output is the green receptacle.
Headphones or devices connected to the line-out connector mute the internal speaker.	Turn on and use headphones or external speakers, if connected, or disconnect headphones or external speakers.
Computer is in Sleep state.	Press the power button to resume from Sleep state. **CAUTION:** When attempting to resume from Sleep state, do not hold down the power button for more than four seconds. Otherwise, the computer will shut down and you will lose any unsaved data.
Internal speaker is disabled in Computer Setup.	Enable the internal speaker in Computer Setup. Select **Advanced** > **Built-in Device Options**.
The application is set to use a different audio device than speakers.	Some graphics cards support audio over the DisplayPort connection (if applicable), so multiple audio devices may be listed in Device Manager. Make sure the correct device is being used. To access Device Manager in Windows 7, click **Start**, select **Control Panel**, and then select **Device Manager**. To access Device Manager in Windows 10, type `device manager` in the taskbar search box, and then select **Device Manager** from the list of applications.
Some applications can select which audio output device is used.	Make sure the application has selected the correct audio device.
The operating system controls may be set to use a different audio device as the default output device than what is expected.	Set the operating system to use the correct audio device.

Sound from headphones is not clear or muffled.

Cause	Solution
Headphones are plugged into the rear audio output connector. The rear audio output connector is for powered audio devices and is not designed for headphone use.	Plug the headphones into the headphone connector on the front of the computer.

Computer appears to be locked up while recording audio.

Cause	Solution
The hard disk may be full.	Before recording, make sure there is enough free space on the hard disk. You can also try recording the audio file in a compressed format.

Line-in jack is not functioning properly.

Cause	Solution
Jack has been reconfigured in the audio driver or application software.	In the audio driver or application software, reconfigure the jack or set the jack to its default value.

There is no sound or very weak sound is detected by the headset microphone.

Cause	Solution
The incorrect style of headset is being used.	The front headset jack supports only Cellular Telephone Industries Association (CTIA) style headsets. Open Mobile Terminal Platform (OMTP) style headsets are not supported. These styles of headsets differ by the way that the microphone signals are oriented on the connector. To solve the issue, use a CTIA style headset or a commercially available adapter that will convert from OMTP to CTIA signaling.

There is no sound or sound volume is too low.

Cause	Solution
The application is set to use a different audio device than speakers.	Some graphics cards support audio over the DisplayPort connection (if applicable), so multiple audio devices may be listed in Device Manager. Make sure the correct device is being used. To access Device Manager in Windows 7, click **Start**, select **Control Panel**, and then select **Device Manager**. To access Device Manager in Windows 10, type `device manager` in the taskbar search box, and then select **Device Manager** from the list of applications.
Some applications can select which audio output device is used.	Make sure the application has selected the correct audio device.
The operating system controls may be set to use a different audio device as the default output device than what is expected.	Set the operating system to use the correct audio device.

Solving printer problems

If you encounter printer problems, see the documentation that came with the printer and to the common causes and solutions listed in the following table.

Printer will not print.

Cause	Solution
Printer is not turned on and online.	Turn the printer on and make sure it is online.
The correct printer drivers for the application are not installed.	1. Install the correct printer driver for the application. 2. Try printing using the MS-DOS command: `DIR C:\ > [printer port]` where `[printer port]` is the address of the printer being used. If the printer works, reload the printer driver.

Printer will not print.

Cause	Solution
	To run MS-DOS commands, press the Windows key + r, type `cmd` in the **Open** box, and then click **OK**.
If you are on a network, you may not have made the connection to the printer.	Make the proper network connections to the printer.
Printer may have failed.	Run printer self-test.

Printer will not turn on.

Cause	Solution
The cables may not be connected properly.	Reconnect all cables and check the power cord and electrical outlet.

Printer prints garbled information.

Cause	Solution
The correct printer driver for the application is not installed.	Install the correct printer driver for the application.
The cables may not be connected properly.	Reconnect all cables.
Printer memory may be overloaded.	Reset the printer by turning it off for one minute, then turn it back on.

Printer will not print.

Cause	Solution
The printer may be out of paper.	Check the paper tray and refill it if it is empty.

Solving keyboard and mouse problems

If you encounter keyboard or mouse problems, see the documentation that came with the equipment and to the common causes and solutions listed in the following table.

A wireless keyboard/mouse is not working correctly. Symptoms include lagging mouse movement, jumpy mouse/keyboard, or no function of mouse/keyboard and external drive.

Cause	Solution
If your computer is equipped with USB 3.0 ports, connected USB 3.0 devices can interfere with the wireless keyboard USB receiver.	Connect the wireless keyboard USB receiver to a USB 2.0 port that is separated from ports with USB 3.0 devices. If you still experience interference, you may have to place the connectors farther apart using an external USB hub.

Keyboard commands and typing are not recognized by the computer.

Cause	Solution
Keyboard connector is not properly connected.	Shut down the computer, reconnect the keyboard to the back of the computer, and then restart the computer.
Program in use has stopped responding to commands.	Shut down your computer using the mouse and then restart the computer.
Keyboard needs repairs.	See the Worldwide Limited Warranty for terms and conditions.
Computer is in Sleep state.	Press the power button to resume from Sleep state. **CAUTION:** When attempting to resume from Sleep date, do not hold down the power button for more than four seconds. Otherwise, the computer will shut down and you will lose any unsaved data.

Mouse does not respond to movement or is too slow.

Cause	Solution
Mouse connector is not properly plugged into the back of the computer.	Shut down the computer using the keyboard. Windows 7: 1. Press the Ctrl and Esc keys at the same time (or press the Windows logo key) to display the **Start** menu. 2. Use the arrow keys to select **Shut Down** and then press Enter. 3. After the shutdown is complete, plug the mouse connector into the back of the computer (or the keyboard) and restart. Windows 10: 1. Press the Ctrl and Esc keys at the same time (or press the Windows logo key) to display the **Start** menu. 2. Use the arrow keys to scroll to and select the power icon at the top right on the menu, and then press Enter. 3. Use the arrow keys to select **Shut Down**, and then press Enter. 4. After the shutdown is complete, plug the mouse connector into the back of the computer (or the keyboard) and restart.
Program in use has stopped responding to commands.	Shut down the computer using the keyboard then restart the computer.
Mouse may need cleaning.	Remove the roller ball cover on the mouse and clean the internal components.
Mouse may need repair.	See the Worldwide Limited Warranty for terms and conditions.
Computer is in Sleep state.	Press the power button to resume from Sleep state. **CAUTION:** When attempting to resume from Sleep state, do not hold down the power button for more than four seconds. Otherwise, the computer will shut down and you will lose any unsaved data.

Mouse will only move vertically, horizontally, or movement is jerky.

Cause	Solution
Mouse roller ball or the rotating encoder shafts that make contact with the ball are dirty.	Remove roller ball cover from the bottom of the mouse and clean the internal components with a mouse cleaning kit available from most computer stores.

Solving hardware installation problems

You may need to reconfigure the computer when you add or remove hardware, such as an additional drive or expansion card. If you install a plug and play device, Windows automatically recognizes the device and configures the computer. If you install a non-plug and play device, you must reconfigure the computer after completing installation of the new hardware. In Windows, use the **Add Hardware Wizard** and follow the instructions that appear on the screen.

To open the Add Hardware Wizard, open a Command Prompt and open hdwwiz.exe.

⚠ **WARNING!** When the computer is plugged into an AC power source, voltage is always applied to the system board. To reduce the risk of personal injury from electrical shock and/or hot surfaces, be sure to disconnect the power cord from the wall outlet and allow the internal system components to cool before touching.

Table 6-1 Solving hardware installation problems

A new device is not recognized as part of the system.

Cause	Solution
Device is not seated or connected properly.	Ensure that the device is properly and securely connected and that pins in the connector are not bent down.
Cable(s) of new external device are loose or power cables are unplugged.	Ensure that all cables are properly and securely connected and that pins in the cable or connector are not bent down.
Power switch of new external device is not turned on.	Turn off the computer, turn on the external device, then turn on the computer to integrate the device with the computer system.
When the system advised you of changes to the configuration, you did not accept them.	Reboot the computer and follow the instructions for accepting the changes.
A plug and play board may not automatically configure when added if the default configuration conflicts with other devices.	Use Windows Device Manager to deselect the automatic settings for the board and choose a basic configuration that does not cause a resource conflict. You can also use Computer Setup to reconfigure or disable devices to resolve the resource conflict. To access Device Manager in Windows 7, click **Start**, select **Control Panel**, and then select **Device Manager**. To access Device Manager in Windows 10, type `device manager` in the taskbar search box, and then select **Device Manager** from the list of applications.
USB ports on the computer are disabled in Computer Setup.	Run the Computer Setup utility and ensure that **Device available** is selected for appropriate USB ports under **Advanced** > **Port Options**.

Computer will not start.

Cause	Solution
Wrong memory modules were used in the upgrade or memory modules were installed in the wrong location.	1. Review the documentation that came with the system to determine if you are using the correct memory modules and to verify the proper installation. **NOTE:** DIMM1 or XMM1 must always be installed. DIMM1 must be installed before DIMM2, and DIMM3 must be installed before DIMM4.

Computer will not start.

Cause	Solution
	2. Observe the beeps and LED lights on the front of the computer. Beeps and flashing LEDs are codes for specific problems. 3. If you still cannot resolve the issue, contact Customer Support.

Power LED flashes Red three times and then white two times.

Cause	Solution
Memory is installed incorrectly or is bad.	**CAUTION:** To avoid damage to the DIMMs or the system board, you must unplug the computer power cord before attempting to reseat, install, or remove a DIMM module. 1. Reseat DIMMs. Power on the system. 2. Replace DIMMs one at a time to isolate the faulty module. **NOTE:** DIMM1 or XMM1 must always be installed. DIMM1 must be installed before DIMM2, and DIMM3 must be installed before DIMM4 3. Replace third-party memory with HP memory. 4. Replace the system board.

Solving network problems

Some common causes and solutions for network problems are listed in the following table. These guidelines do not discuss the process of debugging the network cabling.

Table 6-2 Solving network problems

Network driver does not detect network controller.

Cause	Solution
Network controller is disabled.	1. Run Computer Setup and enable network controller. 2. Enable the network controller in the operating system using Device Manager. To access Device Manager in Windows 7, click **Start**, select **Control Panel**, and then select **Device Manager**. To access Device Manager in Windows 10, type `device manager` in the taskbar search box, and then select **Device Manager** from the list of applications.
Incorrect network driver.	Check the network controller documentation for the correct driver or obtain the latest driver from the manufacturer's Web site.

Network status link light never flashes.

NOTE: The network status light is supposed to flash when there is network activity.

Cause	Solution
No active network is detected.	Check cabling and network equipment for proper connection.
Network controller is not set up properly.	Check for the device status within Windows, such as Device Manager for driver load and the Network Connections applet within Windows for link status. To access Device Manager in Windows 7, click **Start**, select **Control Panel**, and then select **Device Manager**. To access Device Manager in Windows 10, type `device manager` in the taskbar search box, and then select **Device Manager** from the list of applications.
Network controller is disabled.	1. Run Computer Setup and enable network controller. 2. Enable the network controller in the operating system using Device Manager. To access Device Manager in Windows 7, click **Start**, select **Control Panel**, and then select **Device Manager**. To access Device Manager in Windows 10, type `device manager` in the taskbar search box, and then select **Device Manager** from the list of applications.
Network driver is not properly loaded.	Reinstall network drivers.
System cannot autosense the network.	Disable auto-sensing capabilities and force the system into the correct operating mode.

Diagnostics reports a failure.

Cause	Solution
The cable is not securely connected.	Ensure that the cable is securely attached to the network connector and that the other end of the cable is securely attached to the correct device.
The cable is attached to the incorrect connector.	Ensure that the cable is attached to the correct connector.
There is a problem with the cable or a device at the other end of the cable.	Ensure that the cable and device at the other end are operating correctly.
The network controller is defective.	Contact an authorized service provider.

Diagnostics passes, but the computer does not communicate with the network.

Cause	Solution
Network drivers are not loaded, or driver parameters do not match current configuration.	Make sure the network drivers are loaded and that the driver parameters match the configuration of the network controller. Make sure the correct network client and protocol is installed.
The network controller is not configured for this computer.	Select the **Network and Sharing Center** icon in the **Control Panel** and configure the network controller.

Table 6-2 Solving network problems (continued)

Diagnostics passes, but the computer does not communicate with the network.

Cause	Solution
	To access Control Panel in Windows 7, click **Start**, and then select **Control Panel**. To access Control Panel in Windows 10, type `control panel` in the taskbar search box, and then select **Control Panel** from the list of applications.

Network controller stopped working when an expansion board was added to the computer.

Cause	Solution
The network controller requires drivers.	Verify that the drivers were not accidentally deleted when the drivers for a new expansion board were installed.

Network controller stops working without apparent cause.

Cause	Solution
The files containing the network drivers are corrupted.	Reinstall the network drivers using the Recovery Disc Set in Windows 7 or Windows recovery tools in Windows 10. If necessary, download the softpaq from the web (from a different computer).
The cable is not securely connected.	Ensure that the cable is securely attached to the network connector and that the other end of the cable is securely attached to the correct device.
The network controller is defective.	Contact an authorized service provider.

New network card will not boot.

Cause	Solution
New network card may be defective or may not meet industry-standard specifications.	Install a working, industry-standard NIC, or change the boot sequence to boot from another source.

Cannot connect to network server when attempting Remote System Installation.

Cause	Solution
The network controller is not configured properly.	Verify Network Connectivity, that a DHCP Server is present, and that the Remote System Installation Server contains the NIC drivers for your NIC.

System setup utility reports unprogrammed EEPROM.

Cause	Solution
Unprogrammed EEPROM.	Contact an authorized service provider.

Solving memory problems

If you encounter memory problems, some common causes and solutions are listed in the following table.

CAUTION: Power may still be supplied to the DIMMs when the computer is turned off (depending on the Management Engine (ME) settings). To avoid damage to the DIMMs or the system board, you must unplug the computer power cord before attempting to reseat, install, or remove a memory module.

For those systems that support ECC memory, HP does not support mixing ECC and non-ECC memory. Otherwise, the computer will not boot the operating system.

NOTE: The memory count will be affected by configurations with the Management Engine (ME) enabled. The ME uses 8MB of system memory in single channel mode or 16MB of memory in dual-channel mode to download, decompress, and execute the ME firmware for Out-of-Band (OOB), third-party data storage, and other management functions.

System will not boot or does not function properly after installing additional memory modules.

Cause	Solution
A memory module is not installed in the DIMM1 or XMM1 socket.	Ensure that a memory module is installed in the DIMM1 or XMM1 socket on the system board. This socket must be populated with a memory module.
Memory module is not the correct type or speed grade for the system or the new memory module is not seated properly.	Replace module with the correct industry-standard device for the computer. On some models, ECC and non-ECC memory modules cannot be mixed.

Out of memory error.

Cause	Solution
You have run out of memory to run the application.	Check the application documentation to determine the memory requirements.

Memory count during POST is wrong.

Cause	Solution
The memory modules may not be installed correctly.	Check that the memory modules have been installed correctly and that proper modules are used.
Integrated graphics may use system memory.	No action required.

Insufficient memory error during operation.

Cause	Solution
Too many Terminate and Stay Resident programs (TSRs) are installed.	Delete any TSRs that you do not need.
You have run out of memory for the application.	Check the memory requirements for the application or add more memory to the computer.

Power LED flashes Red five times, once every second, followed by a two second pause, and the computer beeps five times. (Beeps stop after fifth iteration but LEDs continue flashing.)

Cause	Solution
Memory is installed incorrectly or is bad.	1. Reseat DIMMs. Power on the system. 2. Replace DIMMs one at a time to isolate the faulty module. 3. Replace third-party memory with HP memory. 4. Replace the system board.

Solving USB flash drive problems

If you encounter USB flash drive problems, common causes and solutions are listed in the following table.

USB flash drive is not seen as a drive letter in Windows.

Cause	Solution
The drive letter after the last physical drive is not available.	Change the default drive letter for the flash drive in Windows.

USB flash drive not found (identified).

Cause	Solution
The device is attached to a USB port that has been hidden in Computer Setup.	Run the Computer Setup utility and enable USB ports in **Advanced** > **Port Options**.
The device was not properly seated before power-up.	Ensure the device is fully inserted into the USB port before applying power to the system

System will not boot from USB flash drive.

Cause	Solution
Boot order is not correct.	Run the Computer Setup utility and change boot sequence in **Advanced** > **Boot Options**.
Removable Media Boot is disabled in the Computer Setup utility.	Run the Computer Setup utility and enable booting to removable media in **Advanced** > **Boot Options**. Ensure USB is enabled in **Storage** > **Boot Order**.

The computer boots to DOS after making a bootable flash drive.

Cause	Solution
Flash drive is bootable.	Install the flash drive only after the operating system boots.
Flash drive is defective.	Try a different flash drive.

Solving front panel component problems

If you encounter problems with devices connected to the front panel, refer to the common causes and solutions listed in the following table.

A USB device, headphone, or microphone is not recognized by the computer.

Cause	Solution
Device is not properly connected.	1. Turn off the computer. 2. Reconnect the device to the front of the computer and restart the computer.
The device does not have power.	If the USB device requires AC power, be sure one end is connected to the device and one end is connected to a live outlet.
The correct device driver is not installed.	1. Install the correct driver for the device. 2. You might need to reboot the computer.
The cable from the device to the computer does not work.	1. If possible, replace the cable. 2. Restart the computer.
The device is not working.	1. Replace the device. 2. Restart the computer.
USB ports on the computer are disabled in Computer Setup.	Run the Computer Setup utility and ensure that the USB ports are set to **Enabled** in **Security > USB Security**.

Solving Internet access problems

If you encounter Internet access problems, consult your Internet Service Provider (ISP) or refer to the common causes and solutions listed in the following table.

Unable to connect to the Internet.

Cause	Solution
Internet Service Provider (ISP) account is not set up properly.	Verify Internet settings or contact your ISP for assistance.
Web browser is not set up properly.	Verify that the Web browser is installed and set up to work with your ISP.
Cable/DSL modem is not plugged in.	Plug in cable/DSL modem. You should see a “power” LED light on the front of the cable/DSL modem.
Cable/DSL service is not available or has been interrupted due to bad weather.	Try connecting to the Internet at a later time or contact your ISP. (If the cable/DSL service is connected, the “cable” LED light on the front of the cable/DSL modem will be on.)
The CAT5 UTP cable is disconnected.	Connect the CAT5 UTP cable between the cable modem and the computers’s RJ-45 connector. (If the connection is good, the “PC” LED light on the front of the cable/DSL modem will be on.)
IP address is not configured properly.	Contact your ISP for the correct IP address.
Cookies are corrupted. (A “cookie” is a small piece of information that a Web server can store temporarily with the Web browser.	Windows 7: 1. Select **Start** > **Control Panel**.

Unable to connect to the Internet.

Cause	Solution
This is useful for having the browser remember some specific information that the Web server can later retrieve.)	2. Click **Internet Options**. 3. In the **Browsing history** section on the **General** tab, click the **Delete** button. 4. Select the **Cookies** check box and click the **Delete** button. Windows 10: 1. Type `control panel` in the taskbar search box, and then select **Control Panel** from the list of applications. 2. Click **Internet Options**. 3. In the **Browsing history** section, click the **Delete** button. 4. Select the **Cookies and website data** check box and click the **Delete** button.

Cannot automatically launch Internet programs.

Cause	Solution
You must log on to your ISP before some programs will start.	Log on to your ISP and launch the desired program.

Solving software problems

Most software problems occur as a result of the following:

- The application was not installed or configured correctly.
- There is insufficient memory available to run the application.
- There is a conflict between applications.
- Be sure that all the needed device drivers have been installed.
- If you have installed an operating system other than the factory-installed operating system, check to be sure it is supported on the system.

If you encounter software problems, see the applicable solutions listed in the following table.

Computer will not continue and the HP logo does not display.

Cause	Solution
ROM issue - POST error has occurred.	Observe the beeps and LED lights on the front of the computer. See POST error messages and diagnostic front panel LEDs and audible codes on page 89 to determine possible causes. See the Worldwide Limited Warranty for terms and conditions.

“Illegal Operation has Occurred” error message is displayed.

Cause	Solution
Software being used is not Microsoft-certified for your version of Windows.	Verify that the software is certified by Microsoft for your version of Windows (see program packaging for this information).
Configuration files are corrupt.	If possible, save all data, close all programs, and restart the computer.

7 POST error messages and diagnostic front panel LEDs and audible codes

This appendix lists the error codes, error messages, and the various indicator light and audible sequences that you may encounter during Power-On Self-Test (POST) or computer restart, the probable source of the problem, and steps you can take to resolve the error condition.

POST Message Disabled suppresses most system messages during POST, such as memory count and non-error text messages. If a POST error occurs, the screen will display the error message. To manually switch to the POST Messages Enabled mode during POST, press any key (except F10, F11, or F12). The default mode is POST Message Disabled.

The speed at which the computer loads the operating system and the extent to which it is tested are determined by the POST mode selection.

Quick Boot is a fast startup process that does not run all of the system level tests, such as the memory test. Full Boot runs all of the ROM-based system tests and takes longer to complete.

Full Boot may also be enabled to run every 1 to 30 days on a regularly scheduled basis. To establish the schedule, reconfigure the computer to the Full Boot Every x Days mode, using Computer Setup.

NOTE: For more information on Computer Setup, see Computer Setup (F10) Utility on page 47.

POST numeric codes and text messages

This section covers those POST errors that have numeric codes associated with them. The section also includes some text messages that may be encountered during POST.

NOTE: The computer will beep once after a POST text message is displayed on the screen.

Control panel message	Description	Recommended action
002-Option ROM Checksum Error	System ROM or expansion board option ROM checksum.	1. Verify the correct ROM. 2. Flash the ROM if needed. 3. If an expansion board was recently added, remove it to see if the problem remains. 4. Clear CMOS. (See Password security and resetting CMOS on page 96.) 5. If the message disappears, there may be a problem with the expansion card. 6. Replace the system board.
003-System Board Failure	DMA or timers.	1. Clear CMOS. (See Password security and resetting CMOS on page 96.) 2. Remove expansion boards. 3. Replace the system board.
005-Real-Time Clock Power Loss	Invalid time or date in configuration memory.	Reset the date and time under **Control Panel** (Computer Setup can also be used). If

Control panel message	Description	Recommended action
	RTC (real-time clock) battery may need to be replaced.	the problem persists, replace the RTC battery. See the Removal and Replacement section for instructions on installing a new battery.
008–Microcode Patch Error	Processor is not supported by the BIOS.	1. Upgrade BIOS to proper version. 2. Change the processor.
009–PMM Allocation Error during MEBx Download	Memory error during POST execution of the Management Engine (ME) BIOS Extensions option ROM.	1. Reboot the computer. 2. Unplug the power cord, re-seat the memory modules, and reboot the computer. 3. If the memory configuration was recently changed, unplug the computer, restore the original memory configuration, and reboot the computer. 4. If the error persists, replace the system board.
00A-Product Information Not Valid	The product information programmed into the system board is missing or invalid.	Use Computer Setup to update this information.
00B-MEBx Module did not checksum correctly	Memory error during POST execution of the Management Engine (ME) BIOS Extensions option ROM.	1. Reboot the computer. 2. Unplug the power cord, re-seat the memory modules, and reboot the computer. 3. If the memory configuration was recently changed, unplug the power cord, restore the original memory configuration, and reboot the computer. 4. If the error persists, replace the system board.
00C-PMM Deallocation Error during MEBx Cleanup	Memory error during POST execution of the Management Engine (ME) BIOS Extensions option ROM.	1. Reboot the computer. 2. Unplug the power cord, re-seat the memory modules, and reboot the computer. 3. If the memory configuration was recently changed, unplug the power cord, restore the original memory configuration, and reboot the computer. 4. If the error persists, replace the system board.
00D-Setup Error during MEBx Execution	MEBx selection or exit resulted in a setup failure.	1. Reboot the computer. 2. Unplug the power cord, re-seat the memory modules, and reboot the computer. 3. If the memory configuration was recently changed, unplug the power cord, restore the original memory configuration, and reboot the computer. 4. If the error persists, replace the system board.

Control panel message	Description	Recommended action
00E-Inventory Error during MEBx Execution	BIOS information passed to the MEBx resulted in a failure.	1. Reboot the computer. 2. If the error persists, update to the latest BIOS version. 3. If the error still persists, replace the system board.
00F-Interface Error during MEBx Execution	MEBx operation experienced a hardware error during communication with the ME.	1. Reboot the computer. 2. If the error persists, update to the latest BIOS version. 3. If the error still persists, replace the system board.
100-Front Audio Not Connected	Front audio cable has been detached or unseated from system board.	Reconnect or replace front audio cable.
2E1-MemorySize Error	Memory amount has changed since the last boot (memory added or removed).	The system memory size is different from the last startup. The most common reason is the removal of memory from the system board. Press the F1 key to save the memory changes. If this message persists, verify that the memory modules are installed correctly.
2E2-Memory Error	Memory module configuration failed during boot up.	1. Ensure memory modules are correctly installed. 2. Verify proper memory module type. 3. Remove and replace the identified faulty memory module(s). 4. If the error persists after replacing memory modules, replace the system board.
2E3-Incompatible Memory Module in Memory Socket(s) X, X, ...	A memory module in memory socket identified in the error message is missing critical SPD information, or is incompatible with the chipset.	1. Verify proper memory module type. 2. Try another memory socket. 3. Replace with a supported module.
2E4-DIMM Configuration Warning	The current memory configuration is not optimized.	Rearrange the DIMMs so that each channel has the same amount of memory.
2E5-ECC Memory Module Detected on Unsupported Platform	Recently added memory module(s) support ECC memory error correction.	1. If additional memory was recently added, remove it to see if the problem remains. 2. Check product documentation for memory support information.
2E6–Memory Not Configured Correctly for Proper MEBx Execution	DIMM1 is not installed.	Make sure there is a memory module in the DIMM1 socket and that it is properly seated.
300–Configuration Change Warning	The storage device configuration will be updated as shown.	Not applicable
301-Hard Disk 1: SMART Hard Drive Detects Imminent Failure	Hard drive is about to fail. (Some hard drives have a hard drive firmware patch that will fix an erroneous error message.)	1. Determine if hard drive is giving correct error message. Run the Drive Protection System test under using F2 Diagnostics when booting the computer. 2. Apply hard drive firmware patch if applicable. (Available at http://www.hp.com/support.)

Control panel message	Description	Recommended action
		3. Back up contents and replace hard drive.
302-Hard Disk 2: SMART Hard Drive Detects Imminent Failure	Hard drive is about to fail. (Some hard drives have a hard drive firmware patch that will fix an erroneous error message.)	1. Determine if hard drive is giving correct error message. Run the Drive Protection System test under using F2 Diagnostics when booting the computer. 2. Apply hard drive firmware patch if applicable. (Available at http://www.hp.com/support.) 3. Back up contents and replace hard drive.
309 – 30C: Hard Disk 3–6: SMART Hard Drive Detects Imminent Failure	Hard drive is about to fail. (Some hard drives have a hard drive firmware patch that will fix an erroneous error message.)	1. Determine if hard drive is giving correct error message. Run the Drive Protection System test under using F2 Diagnostics when booting the computer. 2. Apply hard drive firmware patch if applicable. (Available at http://www.hp.com/support.) 3. Back up contents and replace hard drive.
3F0–Boot Device Not Found	Boot device not found.	Insert boot device or load operating system.
3F1–Hard Disk 1 Error	Hard disk 1 error.	1. Check and/or replace cables. 2. Clear CMOS. (See Password security and resetting CMOS on page 96.) 3. Replace the hard disk drive.
3F2–Hard Disk 2 Error	Hard disk 2 error.	1. Check and/or replace cables. 2. Clear CMOS. (See Password security and resetting CMOS on page 96.) 3. Replace the hard disk drive.
400-Serial Port A Address Conflict Detected	Both external and internal serial ports are assigned to the same resources.	1. Remove any serial port expansion cards. 2. Clear CMOS. (See Password security and resetting CMOS on page 96.) 3. Reconfigure card resources and/or run Computer Setup or Windows utilities.
401-Serial Port B Address Conflict Detected	Both external and internal serial ports are assigned to the same resources.	1. Remove any serial port expansion cards. 2. Clear CMOS. (See Password security and resetting CMOS on page 96.) 3. Reconfigure card resources and/or run Computer Setup or Windows utilities.
402-Serial Port C Address Conflict Detected	Both external and internal serial ports are assigned to the same resources.	1. Remove any serial port expansion cards. 2. Clear CMOS. (See Password security and resetting CMOS on page 96.) 3. Reconfigure card resources and/or run Computer Setup or Windows utilities.
403-Serial Port D Address Conflict Detected	Both external and internal serial ports are assigned to the same resources.	1. Remove any serial port expansion cards. 2. Clear CMOS. (See Password security and resetting CMOS on page 96.)

Control panel message	Description	Recommended action
		3. Reconfigure card resources and/or run Computer Setup or Windows utilities.
419-Out of Memory Space for Option ROMs	Recently added PCI expansion card contains an option ROM too large to download during POST.	▲ If a PCI expansion card was recently added, remove it to see if the problem remains.
41A-Front USB1/USB2 Not Connected	Front USB cable has been detached or unseated from system board.	Reconnect or replace front USB cable.
41B-Device in PCI Express Slot Failed To Initialize	There is an incompatibility or problem with a PCIe device and the system or PCIe link could not be configured to a valid bus width or speed.	Try rebooting the system. If the error reoccurs, the device may not work with this system
43A-USB Type-C I2C Not Connected	Cable is required between I2C on card and USB-C on the system board.	Install cable between I2C on card and USB-C on the system board.
43B-More Than One USB type-C Cards Are Installed	More than one USB type-C card is installed.	Remove USB type-C card so only one is installed.
500–BIOS Recovery	A system BIOS recovery has occurred.	Not applicable.
70x-Wireless Mode Not Supported	The system has detected a wireless module installed in the system that is not supported and has been disabled.	Replace with a supported module.
800-Keyboard Error	Keyboard failure.	1. Reconnect keyboard with computer turned off. 2. Check connector for bent or missing pins. 3. Ensure that none of the keys are depressed. 4. Replace keyboard.
801-Keyboard or System Unit Error	Keyboard failure.	1. Reconnect the keyboard with computer turned off. 2. Ensure that none of the keys are depressed. 3. Replace the keyboard. 4. Replace the system board.
900-CPU Fan Not Detected	CPU fan is not connected or may have malfunctioned.	1. Reseat CPU fan. 2. Reseat fan cable. 3. Replace CPU fan.
901-Chassis, Rear Chassis, or Front Chassis Fan not Detected	Chassis, rear chassis, or front chassis fan is not connected or may have malfunctioned.	1. Reseat chassis, rear chassis, or front chassis fan. 2. Reseat fan cable. 3. Replace chassis, rear chassis, or front chassis fan.
903-Computer Cover Has Been Removed Since Last System Startup		N/A
904-SATA Cabling Error	One or more SATA devices are improperly attached. For optimal performance, the SATA 0 and SATA 1 ports should be used for hard drives before other ports.	Ensure SATA connectors are used in ascending order. For one device, use SATA 0. For two devices, use SATA 0 and SATA 1. For three devices, use SATA 0, SATA 1, and SATA 2.

Control panel message	Description	Recommended action
90B-Fan Failure	The system has detected that a cooling fan is not operating correctly.	1. Reseat fan. 2. Reseat fan cable. 3. Replace fan.
90D-System Temperature	Thermal shutdown occurred. The system BIOS has detected your machine was previously shut down to avoid overheating. Overheating may occur if the cooling vents are blocked or the operating temperature exceeds the system specifications. The machine should return to normal operation once the situation is resolved.	Make sure system has proper airflow.
90E-Power Supply Fan Not detected	Power supply fan is not connected or may have malfunctioned.	1. Reseat power supply fan. 2. Reseat fan cable. 3. Replace power supply fan.
910–Filter Warning	Airflow filter is dirty.	Replace the airflow filter.

Interpreting system validation diagnostic front panel LEDs and audible codes

During the system validation phase that occurs at system startup, the BIOS validates the functionality of the following subsystems and conditions:

- AC adapter
- System board power
- Processor failure
- BIOS corruption
- Memory failure
- Graphics failure
- System board failure
- BIOS authentication failure

If an error is detected, specific patterns of long and short blinks, accompanied by long and short beeps (where applicable) are used to identify the error. These patterns will make up a two part code:

- Major – the category of the error
- Minor – the specific error within the category

NOTE: Single beep/blink codes are not used.

Number of long beeps/blinks	Error category
1	Not used
2	BIOS
3	Hardware

Number of long beeps/blinks	Error category
4	Thermal
5	System board

Patterns of blink/beep codes are determined by using the following parameters:

- 1 second pause occurs after the last major blink.
- 2 second pause occurs after the last minor blink.
- Beep error code sequences occur for the first 5 iterations of the pattern and then stop.
- Blink error code sequences continue until the computer is unplugged or the power button is pressed.

NOTE: Not all diagnostic lights and audible codes are available on all models.

The red LED blinks to represent the major error category (long blinks). The white LED blinks to represent the minor error category (short blinks). For example, '3.5' indicates 3 long red blinks and 5 short white blinks to communicate the processor is not detected.

Category	Major/minor code	Description
BIOS	2.2	The main area (DXE) of BIOS has become corrupted and there is no recovery binary image available.
	2.3	The embedded controller policy requires the user to enter a key sequence.
	2.4	The embedded controller is checking or recovering the boot block.
Hardware	3.2	The embedded controller has timed out waiting for BIOS to return from memory initialization.
	3.3	The embedded controller has timed out waiting for BIOS to return from graphics initialization.
	3.4	The system board displays a power failure (crowbar).*
	3.5	The processor is not detected.*
	3.6	The processor does not support an enabled feature.
Thermal	4.2	A processor over temperature condition has been detected.*
	4.3	An ambient temperature over temperature condition has been detected.
	4.4	An MXM over temperature condition has been detected.
System board	5.2	The embedded controller cannot find valid firmware.
	5.3	The embedded controller has timed out waiting for the BIOS.
	5.4	The embedded controller has timed out waiting for BIOS to return from system board initialization.
	5.5	The embedded controller rebooted the system after a possible lockup condition had been detected through the use of a System Health Timer, Automated System Recovery Timer, or other mechanism.

* Indicates hardware triggered event; all other events are controlled by the BIOS.

8 Password security and resetting CMOS

This computer supports security password features, which can be established through the Computer Setup Utilities menu.

This computer supports two security password features that are established through the Computer Setup Utilities menu: administrator password and power-on password. When you establish only an administrator password, any user can access all the information on the computer except Computer Setup. When you establish only a power-on password, the power-on password is required to access Computer Setup and any other information on the computer. When you establish both passwords, only the administrator password will give you access to Computer Setup.

When both passwords are set, the administrator password can also be used in place of the power-on password as an override to log in to the computer. This is a useful feature for a network administrator.

If you forget one or both passwords, you can clear all passwords by powering off the system, opening the cover, temporarily removing the CLR_PSWD jumper, and booting once. This will erase the administrator and power-on passwords. You must restore the jumper to create new passwords.

The computer's configuration memory (CMOS) stores information about the computer's configuration.

The CMOS jumper resets CMOS but does not clear the power-on and setup passwords.

⚠ **CAUTION:** Resetting the CMOS with power removed will reset the BIOS settings to factory defaults. It may be useful to back up the BIOS settings or save them as custom defaults before resetting them in case they are needed later. Back up can be performed in Computer Setup or using the BiosConfigUtility tool available from www.hp.com. See Computer Setup (F10) Utility on page 47 for information on backing up the BIOS settings.

Resetting CMOS resets BIOS settings to default, but does not clear the passwords or affect any of the other Security settings. On Intel systems with advanced manageability features, resetting CMOS will also partially unprovision AMT.

⚠ **CAUTION:** Stringent security is a mode where there is no physical bypass of the password function. If enabled, removing the password jumper will be ignored. To enable this mode, change the security setting **Clear Password Jumper** in Password Policies to **Ignore**.

If you lose or forget the password when in stringent security mode, the system can only be reset by System Management Command. This is a way for HP Service and Support to provide a secure method to access the BIOS and command a password reset for a specifically identified unit under the direction of the owner. This scenario may not be covered under warranty.

To prevent needing a customer service event to restore access to the system, record your configured administrator and power-on passwords in a safe place away from your computer.

NOTE: You will receive POST error messages after clearing CMOS and rebooting advising you that configuration changes have occurred. Use Computer Setup to reset any special system setups along with the date and time.

⚠ **CAUTION:** It is important to back up the computer CMOS settings before resetting them in case they are needed later. Back up is easily done through Computer Setup. See Computer Setup (F10) Utility on page 47 for information on backing up the CMOS settings.

Resetting CMOS and/or the password jumper

This computer supports security password features, which can be established through the Computer Setup Utilities menu.

This computer supports two security password features that are established through the Computer Setup Utilities menu: administrator password and power-on password. When you establish only an administrator password, any user can access all the information on the computer except Computer Setup. When you establish only a power-on password, the power-on password is required to access Computer Setup and any other information on the computer. When you establish both passwords, only the administrator password will give you access to Computer Setup.

When both passwords are set, the administrator password can also be used in place of the power-on password as an override to log in to the computer. This is a useful feature for a network administrator.

If you forget one or both passwords, you can clear all passwords by powering off the system, opening the cover, temporarily removing the CMOS/PSWD jumper, and booting once. This will erase the administrator and power-on passwords. You must restore the jumper to create new passwords.

⚠ **CAUTION:** Resetting the CMOS with power removed will reset the BIOS settings to factory defaults. It may be useful to back up the BIOS settings or save them as custom defaults before resetting them in case they are needed later. Back up can be performed in Computer Setup or using the BiosConfigUtility tool available from www.hp.com. See Computer Setup (F10) Utility on page 47 for information on backing up the BIOS settings.

Resetting CMOS resets BIOS settings to default, but does not clear the passwords or affect any of the other Security settings. On Intel systems with advanced manageability features, resetting CMOS will also partially unprovision AMT.

⚠ **CAUTION:** Stringent security is a mode where there is no physical bypass of the password function. If enabled, removing the password jumper will be ignored. To enable this mode, change the security setting **Clear Password Jumper** in Password Policies to **Ignore**.

If you lose or forget the password when in stringent security mode, the system can only be reset by System Management Command. This is a way for HP Service and Support to provide a secure method to access the BIOS and command a password reset for a specifically identified unit under the direction of the owner. This scenario may not be covered under warranty.

To prevent needing a customer service event to restore access to the system, record your configured administrator and power-on passwords in a safe place away from your computer.

NOTE: You will receive POST error messages after clearing CMOS and rebooting advising you that configuration changes have occurred. Use Computer Setup to reset any special system setups along with the date and time.

To clear CMOS, disable the power-on or administrator password features, or to clear the power-on or administrator passwords, complete the following steps:

1. Shut down the operating system properly, then turn off the computer and any external devices, and disconnect the power cord from the power outlet.
2. With the power cord disconnected, press the power button again to drain the system of any residual power.

WARNING! To reduce the risk of personal injury from electrical shock and/or hot surfaces, be sure to disconnect the power cord from the wall outlet, and allow the internal system components to cool before touching.

CAUTION: When the computer is plugged in, the power supply always has voltage applied to the system board even when the unit is turned off. Failure to disconnect the power cord can result in damage to the system.

Static electricity can damage the electronic components of the computer or optional equipment. Before beginning these procedures, ensure that you are discharged of static electricity by briefly touching a grounded metal object. See the *Safety & Regulatory Information* guide for more information.

3. Remove the access panel.
4. Locate the header and jumper labeled CMOS/PSWD.

NOTE: The password jumper is blue so that it can be easily identified.

5. Remove the jumper from pins 1 and 2.
6. Place the jumper on either pin 1 or 2, but not both, so that it does not get lost.
7. Replace the access panel and reconnect the external equipment.
8. Plug in the computer and turn on power. Allow the operating system to start. This clears the current passwords and disables the password features.
9. Shut down the computer, unplug the power, and disconnect the external equipment.
10. Remove the access panel.
11. Place the jumper on pins 1 and 2.
12. Replace the access panel.
13. Reconnect the external equipment and plug in the computer.

Changing a Setup or Power-on password

To change the power-on or setup password, complete the following steps:

1. Turn on or restart the computer.

   To change the Setup password, go to step 2.

   To change the Power-on password, go to step 3.
2. To change the Setup password, as soon as the computer turns on:

   - Press the Esc key while “Press the ESC key for Startup Menu” message is displayed.

   - Press the F10 key to enter Computer Setup.

3. When the key icon appears, type your current password, a slash (/) or alternate delimiter character, your new password, another slash (/) or alternate delimiter character, and your new password again as shown:

   current password/new password/new password

   NOTE: Type the new password carefully since the characters do not appear on the screen.

4. Press Enter.

The new password will take effect the next time the computer is restarted.

Deleting a Setup or Power-on password

To delete the power-on or setup password, complete the following steps:

1. Turn on or restart the computer.

   To delete the Setup password, go to step 2.

   To delete the Power-on password, go to step 3.

2. To delete the Setup password, as soon as the computer turns on:

   - Press the Esc key while “Press the ESC key for Startup Menu” message is displayed.

   - Press the F10 key to enter Computer Setup.

3. When the key icon appears, type your current password, a slash (/) or alternate delimiter character, your new password, another slash (/) or alternate delimiter character, and your new password again as shown:

   current password/

4. Press Enter.

9 Using HP PC Hardware Diagnostics (UEFI)

HP PC Hardware Diagnostics is a Unified Extensible Firmware Interface (UEFI) that allows you to run diagnostic tests to determine whether the computer hardware is functioning properly. The tool runs outside the operating system so that it can isolate hardware failures from issues that are caused by the operating system or other software components.

When HP PC Hardware Diagnostics (UEFI) detects a failure that requires hardware replacement, a 24-digit Failure ID is generated. This ID can then be provided to support to help determine how to correct the problem.

To start HP PC Hardware Diagnostics (UEFI), follow these steps:

1. Turn on or restart the computer, and quickly press esc
2. Press F2.

   The BIOS searches three places for the diagnostic tools, in the following order:

   a. Connected USB drive

   NOTE: To download the HP PC Hardware Diagnostics (UEFI) tool to a USB drive, see Downloading HP PC Hardware Diagnostics (UEFI) to a USB device on page 100.

   b. Hard drive

   c. BIOS
3. When the diagnostic tool opens, select the type of diagnostic test you want to run, and then follow the on-screen instructions.

NOTE: If you need to stop a diagnostic test, press esc.

Downloading HP PC Hardware Diagnostics (UEFI) to a USB device

NOTE: The HP PC Hardware Diagnostics (UEFI) download instructions are provided in English only, and you must use a Windows computer to download and create the HP UEFI support environment because only .exe files are offered.

There are two options to download HP PC Hardward Diagnostics to USB device.

Download the latest UEFI version

1. Go to http://www.hp.com/go/techcenter/pcdiags. The HP PC Diagnostics home page is displayed.
2. In the HP PC Hardware Diagnostics section, click the **Dowload** link, and then select **Run**.

Download any version of UEFI for a specific product

1. Go to http://www.hp.com/support, and then select your country. The HP Support page is displayed. .
2. Click **Drivers & Downloads**.
3. Use the categories listed to find your product.

   – or –

   Click **Find Now** to let HP automatically detect your product.

4. Select your computer, and then select your operating system.
5. In the **Diagnostic** section, follow the on-screen instructions to select and download the UEFI version you want.

10 System backup and recovery

Backing up, restoring, and recovering in Windows 10

This section provides information about the following processes. The information in the section is standard procedure for most products.

- Creating recovery media and backups
- Restoring and recovering your system

For additional information, refer to Help and Support.

▲ Type `help` in the taskbar search box, and then select **Help and Support**.

Creating recovery media and backups

The following methods of creating recovery media and backups are available on select products only. Choose the available method according to your computer model.

- Use HP Recovery Manager to create HP Recovery media after you successfully set up the computer. This step creates a backup of the HP Recovery partition on the computer. The backup can be used to reinstall the original operating system in cases where the hard drive is corrupted or has been replaced. For information on creating recovery media, see Creating HP Recovery media (select products only) on page 102. For information on the recovery options that are available using the recovery media, see What you need to know before you get started on page 104.
- Use Windows tools to create system restore points and create backups of personal information.

  For more information, see Using Windows tools on page 103.

NOTE: If storage is 32 GB or less, Microsoft System Restore is disabled by default.

Creating HP Recovery media (select products only)

If possible, check for the presence of the Recovery partition and the Windows partition. From the Start menu, select **File Explorer**.

- If your computer does not list the Windows partition and the Recovery partition, you can obtain recovery media for your system from support. See the *Worldwide Telephone Numbers* booklet included with the computer. You can also find contact information on the HP website. Go to http://www.hp.com/support, select your country or region, and follow the on-screen instructions.

  You can use Windows tools to create system restore points and create backups of personal information, see Using Windows tools on page 103.
- If your computer does list the Recovery partition and the Windows partition, you can use HP Recovery Manager to create recovery media after you successfully set up the computer. HP Recovery media can be used to perform system recovery if the hard drive becomes corrupted. System recovery reinstalls the original operating system and software programs that were installed at the factory and then configures the settings for the programs. HP Recovery media can also be used to customize the system or restore the factory image if you replace the hard drive.

- Only one set of recovery media can be created. Handle these recovery tools carefully, and keep them in a safe place.
- HP Recovery Manager examines the computer and determines the required storage capacity for the media that will be required.
- To create recovery discs, your computer must have an optical drive with DVD writer capability, and you must use only high-quality blank DVD-R, DVD+R, DVD-R DL, or DVD+R DL discs. Do not use rewritable discs such as CD±RW, DVD±RW, double-layer DVD±RW, or BD-RE (rewritable Blu-ray) discs; they are not compatible with HP Recovery Manager software. Or, instead, you can use a high-quality blank USB flash drive.
- If your computer does not include an integrated optical drive with DVD writer capability, but you would like to create DVD recovery media, you can use an external optical drive (purchased separately) to create recovery discs. If you use an external optical drive, it must be connected directly to a USB port on the computer; the drive cannot be connected to a USB port on an external device, such as a USB hub. If you cannot create DVD media yourself, you can obtain recovery discs for your computer from HP. See the *Worldwide Telephone Numbers* booklet included with the computer. You can also find contact information on the HP website. Go to http://www.hp.com/support, select your country or region, and follow the on-screen instructions.
- Be sure that the computer is connected to AC power before you begin creating the recovery media.
- The creation process can take an hour or more. Do not interrupt the creation process.
- If necessary, you can exit the program before you have finished creating all of the recovery DVDs. HP Recovery Manager will finish burning the current DVD. The next time you start HP Recovery Manager, you will be prompted to continue.

To create HP Recovery media:

1. Type `recovery` in the taskbar search box, and then select **HP Recovery Manager**.
2. Select **Create recovery media**, and then follow the on-screen instructions.

If you ever need to recover the system, see Recovering using HP Recovery Manager on page 104.

Using Windows tools

You can create recovery media, system restore points, and backups of personal information using Windows tools.

NOTE: If storage is 32 GB or less, Microsoft System Restore is disabled by default.

For more information and steps, see Help and Support.

▲ Type `help` in the taskbar search box, and then select Help and Support.

Restore and recovery

There are several options for recovering your system. Choose the method that best matches your situation and level of expertise:

IMPORTANT: Not all methods are available on all products.

- Windows offers several options for restoring from backup, refreshing the computer, and resetting the computer to its original state. For more information see Help and Support.

▲ Type `help` in the taskbar search box, and then select **Help and Support**.

- If you need to correct a problem with a preinstalled application or driver, use the Reinstall drivers and/or applications option (select products only) of HP Recovery Manager to reinstall the individual application or driver.

  ▲ Type `recovery` in the taskbar search box, select **HP Recovery Manager**, select **Reinstall drivers and/or applications**, and then follow the on-screen instructions.

- If you want to recover the Windows partition to original factory content, you can choose the System Recovery option from the HP Recovery partition (select products only) or use the HP Recovery media. For more information, see Recovering using HP Recovery Manager on page 104. If you have not already created recovery media, see Creating HP Recovery media (select products only) on page 102.
- On select products, if you want to recover the computer's original factory partition and content, or if you have replaced the hard drive, you can use the Factory Reset option of HP Recovery media. For more information, see Recovering using HP Recovery Manager on page 104.
- On select products, if you want to remove the recovery partition to reclaim hard drive space, HP Recovery Manager offers the Remove Recovery Partition option.

  For more information, see Removing the HP Recovery partition (select products only) on page 105.

Recovering using HP Recovery Manager

HP Recovery Manager software allows you to recover the computer to its original factory state by using the HP Recovery media that you either created or that you obtained from HP, or by using the HP Recovery partition (select products only). If you have not already created recovery media, see Creating HP Recovery media (select products only) on page 102.

What you need to know before you get started

- HP Recovery Manager recovers only software that was installed at the factory. For software not provided with this computer, you must either download the software from the manufacturer's website or reinstall the software from the media provided by the manufacturer.

IMPORTANT: Recovery through HP Recovery Manager should be used as a final attempt to correct computer issues.

- HP Recovery media must be used if the computer hard drive fails. If you have not already created recovery media, see Creating HP Recovery media (select products only) on page 102.
- To use the Factory Reset option (select products only), you must use HP Recovery media. If you have not already created recovery media, see Creating HP Recovery media (select products only) on page 102.
- If your computer does not allow the creation of HP Recovery media or if the HP Recovery media does not work, you can obtain recovery media for your system from support. See the *Worldwide Telephone Numbers* booklet included with the computer. You can also find contact information from the HP website. Go to http://www.hp.com/support, select your country or region, and follow the on-screen instructions.

IMPORTANT: HP Recovery Manager does not automatically provide backups of your personal data. Before beginning recovery, back up any personal data you want to retain.

Using HP Recovery media, you can choose from one of the following recovery options:

NOTE: Only the options available for your computer display when you start the recovery process.

- System Recovery—Reinstalls the original operating system, and then configures the settings for the programs that were installed at the factory.
- Factory Reset—Restores the computer to its original factory state by deleting all information from the hard drive and re-creating the partitions. Then it reinstalls the operating system and the software that was installed at the factory.

The HP Recovery partition (select products only) allows System Recovery only.

Using the HP Recovery partition (select products only)

The HP Recovery partition allows you to perform a system recovery without the need for recovery discs or a recovery USB flash drive. This type of recovery can be used only if the hard drive is still working.

To start HP Recovery Manager from the HP Recovery partition:

1. Type `recovery` in the taskbar search box, select **Recovery Manager**, and then select **HP Recovery Environment**.

   - or -

   Press f11 while the computer boots, or press and hold f11 as you press the power button.
2. Select **Troubleshoot** from the boot options menu.
3. Select **Recovery Manager**, and then follow the on-screen instructions.

Using HP Recovery media to recover

You can use HP Recovery media to recover the original system. This method can be used if your system does not have an HP Recovery partition or if the hard drive is not working properly.

1. If possible, back up all personal files.
2. Insert the HP Recovery media, and then restart the computer.

   NOTE: If the computer does not automatically restart in HP Recovery Manager, change the computer boot order. See Changing the computer boot order on page 105.
3. Follow the on-screen instructions.

Changing the computer boot order

If your computer does not restart in HP Recovery Manager, you can change the computer boot order, which is the order of devices listed in BIOS where the computer looks for startup information. You can change the selection to an optical drive or a USB flash drive.

To change the boot order:

1. Insert the HP Recovery media.
2. Access BIOS.

   Restart the computer, quickly press esc, and then press f9 for boot options.
3. Select the optical drive or USB flash drive from which you want to boot.
4. Follow the on-screen instructions.

Removing the HP Recovery partition (select products only)

HP Recovery Manager software allows you to remove the HP Recovery partition to free up hard drive space.

IMPORTANT: After you remove the HP Recovery partition, you will not be able to perform System Recovery or create HP recovery media from the HP Recovery partition. So before you remove the Recovery partition, create HP Recovery media; see Creating HP Recovery media (select products only) on page 102.

NOTE: The Remove Recovery Partition option is only available on products that support this function.

Follow these steps to remove the HP Recovery partition:

1. Type `recovery` in the taskbar search box, and then select **HP Recovery Manager**.
2. Select **Remove Recovery Partition**, and then follow the on-screen instructions.

Backing up, restoring, and recovering in Windows 7

Your computer includes tools provided by HP and Windows to help you safeguard your information and retrieve it if you ever need to. These tools will help you return your computer to a proper working state or even back to the original factory state, all with simple steps.

This section provides information about the following processes:

- Creating recovery media and backups
- Restoring and recovering your system

NOTE: This section describes an overview of backing up, restoring, and recovering options. For more details about the Windows Backup and Restore tools provided, see Help and Support. To access Help and Support, select **Start > Help and Support**.

Recovery after a system failure is only as good as your most recent backup.

1. After you successfully set up the computer, create recovery media. This media can be used to reinstall the original operating system in cases where the hard drive is corrupted or has been replaced. See Creating recovery media on page 106.
2. As you add hardware and software programs, create system restore points. A system restore point is a snapshot of certain hard drive contents saved by Windows System Restore at a specific time. A system restore point contains information that Windows uses, such as registry settings. Windows creates a system restore point for you automatically during a Windows update and during other system maintenance (such as a software update, security scanning, or system diagnostics). You can also manually create a system restore point at any time. For more information and steps for creating specific system restore points, see Help and Support. To access Help and Support, select **Start > Help and Support**.
3. As you add photos, video, music, and other personal files, create a backup of your personal information. If files are accidentally deleted from the hard drive and they can no longer be restored from the Recycle Bin, or if files become corrupted, you can restore the files that you backed up. In case of system failure, you can use the backup files to restore the contents of your computer. See Backing up your information on page 108.

NOTE: HP recommends that you print the recovery procedures and save them for later use, in case of system instability.

Creating recovery media

After you successfully set up the computer, create recovery media. The media can be used to reinstall the original operating system in cases where the hard drive is corrupted or has been replaced.

There are two types of recovery media. To determine which steps to follow for your computer:

1. Click the **Start** button.
2. Click **All Programs**.
   - If **Security and Protection** is listed, continue with the steps in Creating recovery media using HP Recovery Manager (select models only) on page 107.
   - If **Productivity and Tools** is listed, continue with the steps in Creating recovery discs with HP Recovery Disc Creator (select models only) on page 108.

Creating recovery media using HP Recovery Manager (select models only)

- To create recovery discs, your computer must have a DVD writer. Use DVD+R or DVD-R discs (purchased separately). The discs you use will depend on the type of optical drive you are using.

NOTE: DVD+R DL, DVD-R DL, or DVD±RW disc are not supported.

- You have the option of creating a recovery USB flash drive instead, using a high-quality USB drive.
- If you are creating recovery discs, be sure to use high-quality discs. It is normal for the system to reject defective discs. You will be prompted to insert a new blank disc to try again.
- The number of discs in the recovery-disc set depends on your computer model (typically 3 to 6 DVDs). The Recovery Media Creation program tells you the specific number of blank discs needed to make the set. If you are using a USB flash drive, the program will tell you the size of the drive required to store all the data (minimum of 8 GB).

NOTE: The process of creating recovery media is lengthy. You can quit the process at any time. The next time you initiate the process, it resumes where it left off.

NOTE: Do not use media cards for creating recovery media. The system may not be able to boot up from a media card and you may not be able to run system recovery.

To create recovery discs:

1. Close all open programs.
2. Click the **Start** button, click **All Programs**, click **Security and Protection**, click **Recovery Manager**, and then click **HP Recovery Media Creation**. If prompted, click **Yes** to allow the program to continue.
3. Click **Create recovery media using blank DVD(s)**, and then click **Next**.
4. Follow the on-screen instructions. Label each disc after you make it (for example, Recovery 1, Recovery 2), and then store the discs in a secure place.

To create a recovery USB flash drive:

NOTE: You must use a USB flash drive with a capacity of at least 8 GB.

NOTE: Recovery Media Creation formats the USB flash drive, deleting any files on it.

1. Close all open programs.
2. Insert the USB flash drive into a USB port on the computer.
3. Click the **Start** button, click **All Programs**, click **Security and Protection**, click **Recovery Manager**, and then click **Recovery Media Creation**.
4. Click **Create recovery media with a USB flash drive**, and then click **Next**.

5. Select the USB flash drive from the list of media. The program will let you know how much storage is required to create the recovery drive. If the USB flash drive does not have enough storage capacity, it will appear grayed out, and you must replace it with a larger USB flash drive. Click **Next**.
6. Follow the on-screen instructions. When the process is complete, label the USB flash drive and store it in a secure place.

Creating recovery discs with HP Recovery Disc Creator (select models only)

HP Recovery Disc Creator is a software program that offers an alternative way to create recovery discs on select models. After you successfully set up the computer, you can create recovery discs using HP Recovery Disc Creator. The recovery discs allow you to reinstall your original operating system as well as select drivers and applications if the hard drive becomes corrupted. HP Recovery Disc Creator creates two kinds of recovery discs:

- Windows 7 operating system DVD—Installs the operating system without additional drivers or applications.
- *Driver Recovery* DVD—Installs specific drivers and applications only, in the same way that the HP Software Setup utility installs drivers and applications.

To create recovery discs, your computer must have a DVD writer. Use any of the following types of discs (purchased separately): DVD+R, DVD+R DL, DVD-R, DVD-R DL, or DVD±RW. The discs you use will depend on the type of optical drive you are using.

Creating recovery discs

NOTE: The Windows 7 operating system DVD can be created only once. The option to create that media will not be available after you create a Windows DVD.

To create the Windows DVD:

1. Select **Start > All Programs > Productivity and Tools > HP Recovery Disc Creator**.
2. Select **Windows disk**.
3. From the drop-down menu, select the drive for burning the recovery media.
4. Click the **Create** button to start the burning process. Label the disc after you create it, and store it in a secure place.

After the Windows 7 operating system DVD has been created, create the *Driver Recovery* DVD:

1. Select **Start > All Programs > Productivity and Tools > HP Recovery Disc Creator**.
2. Select **Driver disk**.
3. From the drop-down menu, select the drive for burning the recovery media.
4. Click the **Create** button to start the burning process. Label the disc after you create it, and store it in a secure place.

Backing up your information

You should create your initial backup immediately after initial system setup. As you add new software and data files, you should continue to back up your system on a regular basis to maintain a reasonably current backup. Your initial and subsequent backups allow you to restore your data and settings if a failure occurs.

You can back up your information to an optional external hard drive, a network drive, or discs.

Note the following when backing up:

- Store personal files in the Documents library, and back it up regularly.
- Back up templates that are stored in their associated directories.
- Save customized settings that appear in a window, toolbar, or menu bar by taking a screen shot of your settings. The screen shot can be a time-saver if you have to reset your preferences.
- When backing up to discs, number each disc after removing it from the drive.

NOTE: For detailed instructions on various backup and restore options, perform a search for these topics in Help and Support. To access Help and Support, select **Start > Help and Support**.

NOTE: You may be prompted by User Account Control for your permission or password when you perform certain tasks. To continue a task, select the appropriate option. For information about User Account Control, see Help and Support: Select **Start > Help and Support**.

To create a backup using Windows Backup and Restore:

NOTE: The backup process may take over an hour, depending on file size and the speed of the computer.

1. Select **Start > All Programs > Maintenance > Backup and Restore**.
2. Follow the on-screen instructions to set up your backup.

System Restore

If you have a problem that might be due to software that you installed on your computer, or if you want to restore the system to a previous state without losing any personal information, use System Restore to return the computer to a previous restore point.

NOTE: Always use this System Restore procedure before you use the System Recovery feature.

To start System Restore:

1. Close all open programs.
2. Click the **Start** button, right-click **Computer**, and then click **Properties**.
3. Click **System protection**, **System Restore**, click **Next**, and then follow the on-screen instructions.

System Recovery

WARNING! This procedure will delete all user information. To prevent loss of information, be sure to back up all user information so you can restore it after recovery.

System Recovery completely erases and reformats the hard disk drive, deleting all data files that you have created, and then reinstalls the operating system, programs, and drivers. However, you must reinstall any software that was not installed on the computer at the factory. This includes software that came on media included in the computer accessory box, and any software programs you installed after purchase. Any personal files must be restored from backups you made.

If you were not able to create system recovery DVDs or USB flash drive, you can order a recovery disc set from support. Go to http://www.hp.com/support, select your country or region, and follow the on-screen instructions.

NOTE: Always use the System Restore procedure before you use the System Recovery program. See System Restore on page 109.

You must choose one of the following methods to perform a System Recovery:

- Recovery image — Run System Recovery from a recovery image stored on your hard disk drive. The recovery image is a file that contains a copy of the original factory-shipped software. To perform a System Recovery from a recovery image, see System Recovery when Windows is responding on page 110 or System Recovery when Windows is not responding on page 110.
- Recovery media — Run System Recovery from recovery media that you have created from files stored on your hard disk drive or purchased separately. See System Recovery using recovery media (select models only) on page 111.

System Recovery when Windows is responding

CAUTION: System Recovery deletes all data and programs you created or installed. Before you begin, back up any important data to a CD or DVD or to a USB flash drive.

NOTE: In some cases, you must use recovery media for this procedure. If you have not already created this media, follow the instructions in Creating recovery media on page 106.

If the computer is working and Windows 7 is responding, use these steps to perform a System Recovery:

1. Turn off the computer.
2. Disconnect all peripheral devices from the computer except the monitor, keyboard, and mouse.
3. Turn on the computer.
4. When Windows has loaded, click the **Start** button, and then click **All Programs**.
   - If **Security and Protection** is listed, continue with step 5.
   - If **Productivity and Tools** is listed, follow the steps in System Recovery when Windows is not responding on page 110.
5. Click **Security and Protection**, click **Recovery Manager**, and then click **Recovery Manager**. If prompted, click **Yes** to allow the program to continue.
6. Under **I need help immediately**, click **System Recovery**.
7. Select **Yes**, and then click **Next**. Your computer restarts.
8. When the computer restarts, you will see the Recovery Manager welcome screen again. Under **I need help immediately**, click **System Recovery**. If you are prompted to back up your files, and you have not done so, select **Back up your files first (recommended)**, and then click **Next**. Otherwise, select **Recover without backing up your files**, and then click **Next**.
9. System Recovery begins. After System Recovery is complete, click **Finish** to restart the computer.
10. When Windows has loaded, shut down the computer, reconnect all peripheral devices, and then turn the computer back on.

System Recovery when Windows is not responding

CAUTION: System Recovery deletes all data and programs you created or installed.

If Windows is not responding, but the computer is working, follow these steps to perform a System Recovery.

1. Turn off the computer. If necessary, press and hold the power button until the computer turns off.
2. Disconnect all peripheral devices from the computer, except the monitor, keyboard, and mouse.
3. Press the power button to turn on the computer.
4. As soon as you see the HP logo screen, repeatedly press the F11 key on your keyboard until the *Windows is Loading Files...* message appears on the screen.

5. At the HP Recovery Manager screen, follow the on-screen instructions to continue.
6. When Windows has loaded, shut down the computer, reconnect all peripheral devices, and then turn the computer back on.

System Recovery using recovery media (select models only)

Use the steps provided in this section if you created recovery media using Creating recovery media using HP Recovery Manager (select models only) on page 107. If you used HP Recovery Disc Creator to create a Windows 7 operating system DVD and a *Driver Recovery* DVD, use the steps in Using HP Recovery Disc operating system discs (select models only) on page 111.

⚠ **CAUTION:** System Recovery deletes all data and programs you have created or installed. Back up any important data to a CD or DVD or to a USB flash drive.

To perform a System Recovery using recovery media:

1. If you are using a set of DVDs, insert the first recovery disc into the DVD drive tray, and close the tray. If you are using a recovery USB flash drive, insert it into a USB port.
2. Click the **Start** button, and then click **Shut Down**.

   or

   If the computer is not responding, press and hold the power button for approximately 5 seconds or until the computer turns off.
3. Disconnect all peripheral devices from the computer except the monitor, keyboard, and mouse.
4. Press the power button to turn on the computer, and press Esc as the computer is powering on to display the startup menu.
5. Use the arrow keys to select the boot menu, and press Enter. Use the arrow keys to select the location where the recovery media is inserted (USB or DVD). Press Enter to boot from that device.
6. If Recovery Manager asks if you want to run System Recovery from Media or Hard Drive, select **Media**. On the Welcome screen, under **I need help immediately**, click **Factory Reset**.
7. If you are prompted to back up your files, and you have not done so, select **Back up your files first (recommended)**, and then click **Next**. Otherwise, select **Recover without backing up your files**, and then click **Next**.
8. If you are prompted to insert the next recovery disc, do so.
9. When Recovery Manager is finished, remove the recovery disc or the recovery USB flash drive from the system.
10. Click **Finish** to restart the computer.

Using HP Recovery Disc operating system discs (select models only)

Use the steps provided in this section if you used HP Recovery Disc Creator to create a Windows 7 operating system DVD and a *Driver Recovery* DVD. If you created recovery media using Creating recovery media using HP Recovery Manager (select models only) on page 107. use the steps in System Recovery using recovery media (select models only) on page 111.

If you cannot use the recovery discs you previously created using the HP Recovery Disc Creator (select models only), you must purchase a Windows 7 operating system DVD to reboot the computer and repair the operating system.

To order a Windows 7 operating system DVD, contact support. Go to http://www.hp.com/support, select your country or region, and follow the on-screen instructions.

CAUTION: Using a Windows 7 operating system DVD completely erases the hard drive contents and reformats the hard drive. All files that you have created and any software that you have installed on the computer are permanently removed. When reformatting is complete, the recovery process helps you restore the operating system, as well as drivers, software, and utilities.

To initiate recovery using a Windows 7 operating system DVD:

NOTE: This process takes several minutes.

1. If possible, back up all personal files.
2. Restart the computer, and then insert the Windows 7 operating system DVD into the optical drive before the Windows operating system loads.

   NOTE: If the computer does not boot to the DVD, restart the computer and press Esc as the computer is powering on to see the startup menu. Use the arrow keys to select the boot menu and press Enter. Use the arrow keys to select the location where the recovery DVD is inserted. Press Enter to boot from that device.
3. When prompted, press any keyboard key.
4. Follow the on-screen instructions.
5. Click **Next**.
6. Select **Install now**.
7. Follow the on-screen instructions.

After the repair is completed:

1. Eject the Windows 7 operating system DVD and then insert the *Driver Recovery* DVD.
2. Follow the on-screen instructions to install the Hardware Enabling Drivers first, and then install Recommended Applications.

A Battery replacement

The battery that comes with the computer provides power to the real-time clock. When replacing the battery, use a battery equivalent to the battery originally installed in the computer. The computer comes with a 3-volt lithium coin cell battery.

⚠ **WARNING!** The computer contains an internal lithium manganese dioxide battery. There is a risk of fire and burns if the battery is not handled properly. To reduce the risk of personal injury:

Do not attempt to recharge the battery.

Do not expose to temperatures higher than 60°C (140ºF).

Do not disassemble, crush, puncture, short external contacts, or dispose of in fire or water.

Replace the battery only with the HP spare designated for this product.

⚠ **CAUTION:** Before replacing the battery, it is important to back up the computer CMOS settings. When the battery is removed or replaced, the CMOS settings will be cleared.

Static electricity can damage the electronic components of the computer or optional equipment. Before beginning these procedures, ensure that you are discharged of static electricity by briefly touching a grounded metal object.

NOTE: The lifetime of the lithium battery can be extended by plugging the computer into a live AC wall socket. The lithium battery is only used when the computer is NOT connected to AC power.

HP encourages customers to recycle used electronic hardware, HP original print cartridges, and rechargeable batteries. For more information about recycling programs, go to http://www.hp.com/recycle.

1. Remove/disengage any security devices that prohibit opening the computer.
2. Remove all removable media, such as compact discs or USB flash drives, from the computer.
3. Turn off the computer properly through the operating system, then turn off any external devices.
4. Disconnect the power cord from the power outlet and disconnect any external devices.

   ⚠ **CAUTION:** Regardless of the power-on state, voltage is always present on the system board as long as the system is plugged into an active AC outlet. You must disconnect the power cord to avoid damage to the internal components of the computer.
5. Remove the access panel.
6. Locate the battery and battery holder on the system board.

   NOTE: On some computer models, it may be necessary to remove an internal component to gain access to the battery.
7. Depending on the type of battery holder on the system board, complete the following instructions to replace the battery.

   Type 1

   a. Lift the battery out of its holder.

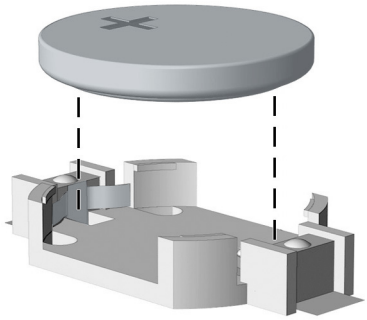

b. Slide the replacement battery into position, positive side up. The battery holder automatically secures the battery in the proper position.

Type 2

a. To release the battery from its holder, squeeze the metal clamp that extends above one edge of the battery. When the battery pops up, lift it out **(1)**.

b. To insert the new battery, slide one edge of the replacement battery under the holder's lip with the positive side up. Push the other edge down until the clamp snaps over the other edge of the battery **(2)**.

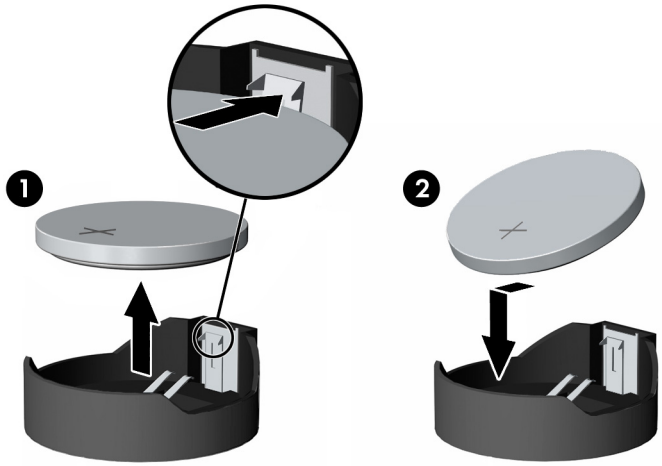

Type 3

a. Pull back on the clip **(1)** that is holding the battery in place, and remove the battery **(2)**.

b. Insert the new battery and position the clip back into place.

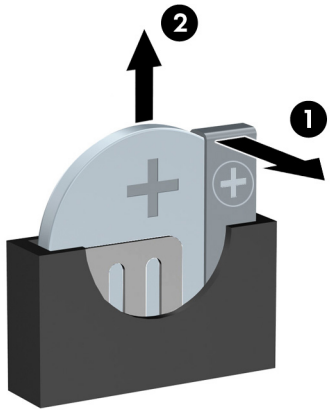

NOTE: After the battery has been replaced, use the following steps to complete this procedure.

8. Replace the access panel.
9. Plug in the computer and turn on power to the computer.
10. Reset the date and time, your passwords, and any special system setups using Computer Setup.
11. Lock any security devices that were disengaged when the access panel was removed.

B Statement of Volatility

HP confirms that business desktop systems contain DDR4 volatile memory (memory amount depends on the customer configuration). In addition, the motherboard in the condition originally shipped without subsequent modification or the addition or installation of any applications, features, or functionality, contain the following nonvolatile memory: Real Time Clock battery backed-up configuration memory (256 Bytes), DIMM Serial Presence Detect (SPD) configuration data (256 Bytes per module, 128 Bytes programmable), Serial Peripheral Interface (SPI) ROM for System BIOS (16M Bytes) and Super I/O's: masked keyboard ROM (overall 2K Bytes). In addition, these units contain a Trusted Platform Module (TPM) that contains 16K Bytes of non-volatile memory for user data. The volatile memory will not hold any user data once power has been removed for 30 seconds or longer.

To restore the Non-Volatile memory:

1. Download the latest BIOS (system ROM) from the HP website.
2. Follow the instructions to flash the BIOS that are found on the website.
3. Turn on the system, and while system is powering on, and after the HP splash screen, press the F10 key to enter BIOS setup screen.
4. Select **Security > Restore Security Settings to Default**. Select **Yes** to confirm. The system will reboot. This action will reset the settings in the Security menu to their defaults, reset the TPM and embedded Fingerprint reader (if present), and clear the passwords.

NOTE: Although the TPM security keys will be cleared, data in the non-volatile memory indices may not be. Data stored in these indices should not contain security sensitive information. If an application locks down and secures the non-volatile indices, these indices cannot be cleared.

5. Re-enter the F10 setup utility.
6. Select **Advanced > Secure Boot Configuration**.
7. Select **Reset Secure Boot Keys to factory defaults**.
8. Press the F10, and the select **Yes** to save changes.
9. Re-enter the F10 setup utility.
10. Select **Apply Factory Defaults and Exit**, and the select **Yes** to confirm.
11. Re-enter the F10 Setup Utility and select **Save Custom Defaults** to erase any custom values previously saved.

If Absolute Persistence Module is enabled on the computer, see the service provider for instructions to disable the feature.

C Power cord set requirements

The power supplies on some computers have external power switches. The voltage select switch feature on the computer permits it to operate from any line voltage between 100-120 or 220-240 volts AC. Power supplies on those computers that do not have external power switches are equipped with internal switches that sense the incoming voltage and automatically switch to the proper voltage.

The power cord set received with the computer meets the requirements for use in the country where you purchased the equipment.

Power cord sets for use in other countries must meet the requirements of the country where you use the computer.

General requirements

The requirements listed below are applicable to all countries:

1. The power cord must be approved by an acceptable accredited agency responsible for evaluation in the country where the power cord set will be installed.
2. The power cord set must have a minimum current capacity of 10A (7A Japan only) and a nominal voltage rating of 125 or 250 volts AC, as required by each country's power system.
3. The diameter of the wire must be a minimum of 0.75 mm_2 or 18AWG, and the length of the cord must be between 1.8 m (6 feet) and 3.6 m (12 feet).

The power cord should be routed so that it is not likely to be walked on or pinched by items placed upon it or against it. Particular attention should be paid to the plug, electrical outlet, and the point where the cord exits from the product.

⚠ **WARNING!** Do not operate this product with a damaged power cord set. If the power cord set is damaged in any manner, replace it immediately.

Japanese power cord requirements

For use in Japan, use only the power cord received with this product.

⚠ **CAUTION:** Do not use the power cord received with this product on any other products.

Country-specific requirements

Additional requirements specific to a country are shown in parentheses and explained below.

Country	Accrediting Agency	Country	Accrediting Agency
Australia (1)	EANSW	Italy (1)	IMQ
Austria (1)	OVE	Japan (3)	METI
Belgium (1)	CEBC	Norway (1)	NEMKO
Canada (2)	CSA	Sweden (1)	SEMKO
Denmark (1)	DEMKO	Switzerland (1)	SEV
Finland (1)	SETI	United Kingdom (1)	BSI
France (1)	UTE	United States (2)	UL
Germany (1)	VDE		

1. The flexible cord must be Type HO5VV-F, 3-conductor, 0.75mm_2 conductor size. Power cord set fittings (appliance coupler and wall plug) must bear the certification mark of the agency responsible for evaluation in the country where it will be used.
2. The flexible cord must be Type SVT or equivalent, No. 18 AWG, 3-conductor. The wall plug must be a two-pole grounding type with a NEMA 5-15P (15A, 125V) or NEMA 6-15P (15A, 250V) configuration.
3. Appliance coupler, flexible cord, and wall plug must bear a “T” mark and registration number in accordance with the Japanese Dentori Law. Flexible cord must be Type VCT or VCTF, 3-conductor, 0.75 mm_2 conductor size. Wall plug must be a two-pole grounding type with a Japanese Industrial Standard C8303 (7A, 125V) configuration.

D Specifications

Unit	Value	
Chassis (in the desktop position)		
Height	3.7 in	95 mm
Width	10.6 in	270 mm
Depth	11.8 in	300 mm
Approximate Weight	9.8 lb	4.43 kg
Weight Supported (maximum distributed load in desktop position)	77 lb	35 kg
Temperature Range		
Operating	50° to 95°F	10° to 35°C
Nonoperating	-22° to 140°F	-30° to 60°C
NOTE: Operating temperature is derated 1.0° C per 300 m (1000 ft) to 3000 m (10,000 ft) above sea level; no direct sustained sunlight. Maximum rate of change is 10° C/Hr. The upper limit may be limited by the type and number of options installed.		
Relative Humidity (noncondensing)		
Operating	10-90%	10-90%
Nonoperating (38.7°C max wet bulb)	5-95%	5-95%
Maximum Altitude (unpressurized)		
Operating	16,404 ft	5,000 m
Nonoperating	50,000 ft	15,240 m
Power Supply		
Operating Voltage Range	90-264 VAC	
Rated Voltage Range[1]	100-240 VAC	
Rated Line Frequency	50-60 Hz	
Operating Line Frequency	47-63 Hz	
Standard Efficiency	180 W / 250 W active PFC	
High Efficiency	82/85/82% efficient at 20/50/100% load (115V)	
Rated Input Current	250 W / 4 A	
	180 W / 2.3 A	

[1] This system utilizes an active power factor corrected power supply. This allows the system to pass the CE mark requirements for use in the countries of the European Union. The active power factor corrected power supply also has the added benefit of not requiring an input voltage range select switch.

Index

Symbols/Numerics

5.25-inch drive
  location 2

A

access panel
  locked 62
  removal and replacement 21
audible codes 94
audio problems 73
audio-in jack 2, 3, 4
audio-out jack 2
audio-out jack jack 3, 4

B

backup and recovery, Windows 7 106
Backup and Restore, Windows 7 109
backups
  creating Windows 7 106, 108
battery
  disposal 18
battery replacement 113
beep codes 94
booting options
  Full Boot 89
  Quick Boot 89
buttons
  power 2

C

card reader module
  removal and replacement 26
cautions
  AC power 13
  cables 18
  electrostatic discharge 13
  keyboard cleaning 16
  keyboard keys 17
changing a Power-On password 98
changing a Setup password 98
cleaning
  computer 16
  mouse 17
  safety precautions 16
CMOS
  backing up 96
components
  front panel 2
  rear panel 3
computer
  serial number 5
  specifications 119
computer cleaning 16
Computer Setup
  access problem 61
connectors
  DisplayPort monitor 3, 4
  power cord 3, 4
country power cord set requirements 118
Customer Support 59

D

deleting a Power-On password 99
deleting a Setup password 99
disassembly preparation 20
DisplayPort monitor connector 3, 4
drive cage
  removal and replacement 36
Driver Recovery DVD,
  creating 108
  using for restore 111
dust filter
  removal and replacement 22

E

electrostatic discharge (ESD) 13
  preventing damage 14
error
  codes 89, 94
  messages 89
expansion card
  removal and replacement 38

F

F10 Setup
  access problem 61
fan
  removal and replacement 29
fan-sink
  removal and replacement 42
flash drive problems 85
flashing LEDs 94
front bezel
  removal and replacement 23
front panel components 2
front panel problems 86

G

general problems 61
grounding methods 14

H

hard drive
  proper handling 18
  SATA characteristics 19
hard drive activity light 2
hard drive problems 66
hard drive recovery
  Windows 7 109
hard drives
  removal and replacement 30
hardware installation problems 79
headphone jack 2
Help and Support
  Windows 7 106
helpful hints 60
hood sensor module
  removal and replacement 27
HP PC Hardware Diagnostics (UEFI)
  downloading 100
HP Recovery Disc Creator, using 108

I

installing
  battery 113
internal drive bezel
  removal and replacement 24
Internet access problems 86

J

jacks
- audio-in 2, 3, 4
- audio-out 2
- audio-out jack 3, 4
- headphone 2
- microphone 2
- network 3, 4
- RJ-45 3, 4

K

keyboard
- cleaning 16

keyboard problems 76

L

lights
- hard drive activity 2

M

media card reader
- problems 68

memory
- problems 84

memory card reader 2

memory module
- removal and replacement 37

microphone jack 2

monitor problems 69

mouse
- cleaning 17
- problems 76

N

network jack 3, 4

network problems 80

numeric error codes 89

O

operating guidelines 15

optical drives
- removal and replacement 33

optional port port 3, 4

overheating, prevention 15

P

password
- clearing 96
- power-on 96
- setup 96

passwords 98, 99

ports
- optional port 3, 4
- serial 3, 4
- USB 2.0 2
- USB 2.0 with HP Sleep and Charge 2
- USB 2.0 with Wake from S4/S5 3, 4
- USB 3.x 2, 3, 4
- USB Type-C charging 2

POST error messages 89

power button 2

power cord connector 3, 4

power cord set requirements
- country specific 118

power problems 65

power supply
- operating voltage range 119
- removal and replacement 20, 41

Power-On password 98, 99

power-on password 96

printer problems 75

problems
- audio 73
- Computer Setup 61
- F10 Setup 61
- flash drive 85
- front panel 86
- general 61
- hard drive 66
- hardware installation 79
- Internet access 86
- keyboard 76
- Media Card Reader 68
- memory 84
- monitor 69
- mouse 76
- network 80
- power 65
- printer 75
- software 88

processor
- removal and replacement 44

R

rear panel components 3

recovery discs, steps for creating Windows 7 107

recovery discs, using for restore 111

recovery media, creating 108

recovery media, creating Windows 7 106

recovery USB flash drive, steps for creating Windows 7 107

removal and replacement
- access panel 21
- card reader module 26
- drive cage 36
- dust filter 22
- expansion card 38
- fan 29
- fan-sink 42
- front bezel 23
- hard drives 30
- hood sensor module 27
- internal drive bezel 24
- memory module 37
- optical drives 33
- power supply 20, 41
- processor 44
- serial port module 28
- speaker 25
- system board 45

removing
- battery 113

resetting
- CMOS 96
- password jumper 96

RJ-45 jack 3, 4

S

safety and comfort 59

safety precautions
- cleaning 16

SATA
- connectors on system board 19
- hard drive characteristics 19

screws, correct size 17

serial port 3, 4

serial port module
- removal and replacement 28

service considerations 17

Setup password 98, 99

setup password 96

slim optical drive
- location 2

software
- problems 88
- servicing computer 17

speaker
removal and replacement 25
specifications
computer 119
static electricity 13
system board
removal and replacement 45
SATA connectors 19
System Recovery using Windows 7 recovery media 111
System Recovery, Windows 7 109
system restore points, creating Windows 7 106
System Restore, Windows 7 109

T

temperature control 15
tools, servicing 17
Torx T-15 screwdriver 17

U

USB 2.0 port 2
USB 2.0 port with HP Sleep and Charge 2
USB 2.0 port with Wake from S4/S5 3, 4
USB 3.x port 2, 3, 4
USB Type-C charging port 2

V

ventilation, proper 15

W

Windows 10
backup and restore 102
Windows 7
backing up information 108
backup and recovery 106
Backup and Restore 109
creating backups 106
creating recovery media 106
creating system restore points 106
hard drive recovery 109
Help and Support 106
steps for creating recovery discs 107
steps for creating recovery media 107
steps for creating recovery USB flash drive 107
System Recovery 109
System Recovery using recovery media 111
System Restore 109
Windows 7 operating system discs
using for restore 111
Windows 7 operating system DVD
creating 108
using for restore 111
Windows 7 operating system media
creating 108