Maintenance and Service Guide

HP EliteDesk 800 G3 SFF Business PC

© Copyright 2017 HP Development Company, L.P.

AMD is a trademark of Advanced Micro Devices, Inc. Bluetooth is a trademark owned by its proprietor and used by HP Inc. under license. Intel, Celeron, and Pentium are trademarks of Intel Corporation in the U.S. and other countries. Microsoft and Windows are trademarks of the Microsoft group of companies.

The information contained herein is subject to change without notice. The only warranties for HP products and services are set forth in the express warranty statements accompanying such products and services. Nothing herein should be construed as constituting an additional warranty. HP shall not be liable for technical or editorial errors or omissions contained herein.

First Edition: January 2017

Document Part Number: 913349-001

Product notices

This user guide describes features that are common to most models. Some features may not be available on your computer.

This guide describes features that are common to most models. Some features may not be available on your computer.

In accordance with Microsoft's support policy, HP does not support the Windows® 8 or Windows 7 operating system on products configured with Intel and AMD 7th generation and forward processors or provide any Windows 8 or Windows 7 drivers on http://www.support.hp.com.

Not all features are available in all editions of Windows. This computer may require upgraded and/or separately purchased hardware, drivers and/or software to take full advantage of Windows functionality. Go to http://www.microsoft.com for details.

Not all features are available in all editions of Windows. This computer may require upgraded and/or separately purchased hardware, drivers and/or software to take full advantage of Windows functionality. Go to http://www.microsoft.com for details.

Software terms

By installing, copying, downloading, or otherwise using any software product preinstalled on this computer, you agree to be bound by the terms of the HP End User License Agreement (EULA). If you do not accept these license terms, your sole remedy is to return the entire unused product (hardware and software) within 14 days for a full refund subject to the refund policy of your seller.

For any further information or to request a full refund of the price of the computer, please contact your seller.

Safety warning notice

⚠ **WARNING!** To reduce the possibility of heat-related injuries or of overheating the device, do not place the device directly on your lap or obstruct the device air vents. Use the device only on a hard, flat surface. Do not allow another hard surface, such as an adjoining optional printer, or a soft surface, such as pillows or rugs or clothing, to block airflow. Also, do not allow the AC adapter to contact the skin or a soft surface, such as pillows or rugs or clothing, during operation. The device and the AC adapter comply with the user-accessible surface temperature limits defined by the International Standard for Safety of Information Technology Equipment (IEC 60950-1).

Table of contents

1 Product features 1

Standard configuration features 1

Front panel components 2

Rear panel components 3

Serial number location 4

2 Illustrated parts catalog 5

Small Form Factor (SFF) chassis spare parts 5

Computer major components 5

Misc parts 7

Cables and adapters 9

Boards, cards, and ports 9

Drives 10

3 Routine care, SATA drive guidelines, and disassembly preparation 12

Electrostatic discharge information 12

Generating static 12

Preventing electrostatic damage to equipment 13

Personal grounding methods and equipment 13

Grounding the work area 13

Recommended materials and equipment 14

Operating guidelines 14

Routine care 15

General cleaning safety precautions 15

Cleaning the Computer Case 15

Cleaning the keyboard 15

Cleaning the monitor 16

Cleaning the mouse 16

Service considerations 16

Power supply fan 16

Tools and software Requirements 16

Screws 17

Cables and connectors 17

Hard Drives 17

Lithium coin cell battery 17

SATA hard drives 18

SATA hard drive cables 18
SATA data cable 18
SMART ATA drives 18
Cable management 19

4 Removal and replacement procedures – small form factor (SFF) chassis 20
Preparation for disassembly 20
Access panel 21
Front bezel 21
Slim optical drive bezel blank 22
Front bezel dust filter 23
System board connections 24
Memory 25
Populating DIMM sockets 25
Removing and installing DIMMs 26
Expansion card 28
Drives 32
Drive positions 32
Installing and Removing Drives 32
Removing a 9.5 mm slim optical drive 33
Installing a 9.5 mm slim optical drive 34
Removing a 3.5-inch hard drive 35
Installing a 3.5-inch hard drive 38
Hard drive cage 41
Removing a 2.5-inch hard drive 42
Installing a 2.5-inch hard drive 43
Removing and installing an M.2 SSD storage card 44
WLAN module 46
Air duct 47
Power supply 49
Fan sink 51
Processor 53
Antennas 54
Option port board 57
Hood lock 58
Hood sensor 59
Card reader 60
Speaker 62
System board 64
System board callouts 65
Changing from desktop to tower orientation 66

5 Computer Setup (F10) Utility 67
Computer Setup (F10) Utilities 67
Using Computer Setup (F10) Utilities 67
Computer Setup–Main 69
Computer Setup—Security 71
Computer Setup—Advanced 73
Computer Setup—UEFI Drivers 78
Recovering the Configuration Settings 78

6 Troubleshooting without diagnostics 79
Safety and comfort 79
Before you call for technical support 79
Helpful hints 80
Solving general problems 81
Solving power problems 85
Solving hard drive problems 86
Solving media card reader problems 88
Solving display problems 89
Solving audio problems 93
Solving printer problems 95
Solving keyboard and mouse problems 96
Solving Hardware Installation Problems 98
Solving Network Problems 99
Solving memory problems 102
Solving CD-ROM and DVD problems 103
Solving USB flash drive problems 105
Solving front panel component problems 107
Solving Internet access problems 107
Solving software problems 109

7 POST error messages and diagnostic front panel LEDs and audible codes 110
POST numeric codes and text messages 110
Interpreting system validation diagnostic front panel LEDs and audible codes 115

8 Password security and resetting CMOS 117
Resetting the password jumper 117
Clearing and resetting the BIOS 119

9 Using HP PC Hardware Diagnostics (UEFI) 120
Downloading HP PC Hardware Diagnostics (UEFI) to a USB device 120

10 Backing up, restoring, and recovering 122
Backing up, restoring, and recovering in Windows 10 122
Creating recovery media and backups 122
Creating HP Recovery media (select products only) 122
Using Windows tools 123
Restore and recovery 124
Recovering using HP Recovery Manager 124
What you need to know before you get started 124
Using the HP Recovery partition (select products only) 125
Using HP Recovery media to recover 125
Changing the computer boot order 126
Removing the HP Recovery partition (select products only) 127
Backing up, restoring, and recovering in Windows 7 127
Creating recovery media and backups 127
Guidelines 128
Creating recovery media with HP Recovery Disc Creator 128
Creating recovery media 128
Backing up your information 128
Performing a system recovery 129
Using the Windows recovery tools 129
Using f11 recovery tools (select products only) 130
Using Windows 7 operating system media 131

Appendix A Battery replacement 132

Appendix B Power Cord Set Requirements 135
General Requirements 135
Japanese Power Cord Requirements 135
Country-Specific Requirements 136

Appendix C Statement of memory volatility 137
Nonvolatile memory usage 139
Questions and answers 141
Using HP Sure Start (select models only) 142

Appendix D Specifications 143
SFF Specifications 143

Index 144

1 Product features

Standard configuration features

Features may vary depending on the model. For support assistance and to learn more about the hardware and software installed on your computer model, run the HP Support Assistant utility.

NOTE: This computer model can be used in a tower orientation or a desktop orientation.

Front panel components

Drive configuration may vary by model. Some models have a bezel blank covering the slim optical drive bay.

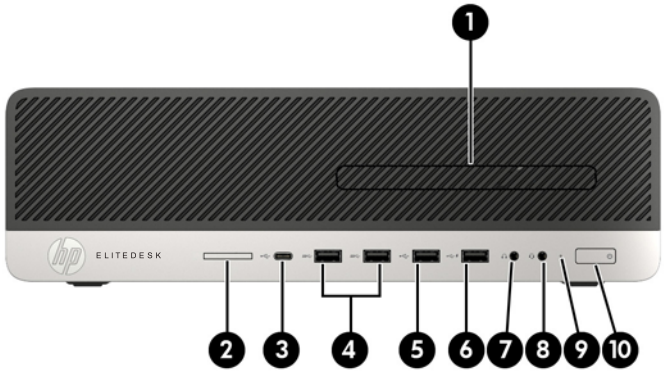

Front panel components			
1	Slim optical drive (optional)	6	USB 2.0 port with HP Sleep and Charge
2	SD card reader (optional)	7	Audio-out (headphone) jack
3	USB Type-C charging port	8	Audio-out (headphone)/Audio-in (microphone) combo jack
4	USB 3.x ports (2)	9	Hard drive activity light
5	USB 2.0 port	10	Power button

NOTE: The light on the power button is normally white when the power is on. If it is flashing red, there is a problem with the computer and it is displaying a diagnostic code. Refer to the *Maintenance and Service Guide* to interpret the code.

Rear panel components

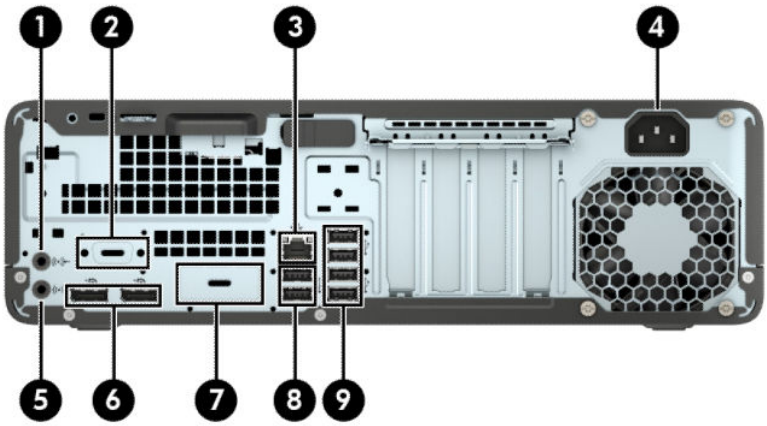

Rear panel components					
1		Audio-in jack	6		DisplayPort monitor connectors (2)
2		Optional serial port	7		Optional port (DisplayPort, HDMI, VGA or USB-C) (USB-C option has alt mode DisplayPort or 15W output)
3		RJ-45 (network) jack	8		USB 2.0 ports (2)
4		Power cord connector	9		USB 3.x ports (4)
5		Audio-out jack for powered audio devices			

NOTE: Your model may have additional optional ports available from HP.

When a device is plugged into either audio jack, a dialog box will appear on the monitor screen asking if you want to use the jack for a microphone or a headphone. You can also reconfigure the jacks at any time by double-clicking the Audio Manager icon in the Windows taskbar.

When a graphics card is installed in one of the system board slots, the video connectors on the graphics card and/or the integrated graphics on the system board may be used. The specific graphics card installed and software configuration will determine the behavior.

The system board graphics can be disabled by changing settings in BIOS F10 Setup.

Serial number location

Each computer has a unique serial number and a product ID number that are located on the exterior of the computer. Keep these numbers available for use when contacting customer service for assistance.

2 Illustrated parts catalog

Small Form Factor (SFF) chassis spare parts

Computer major components

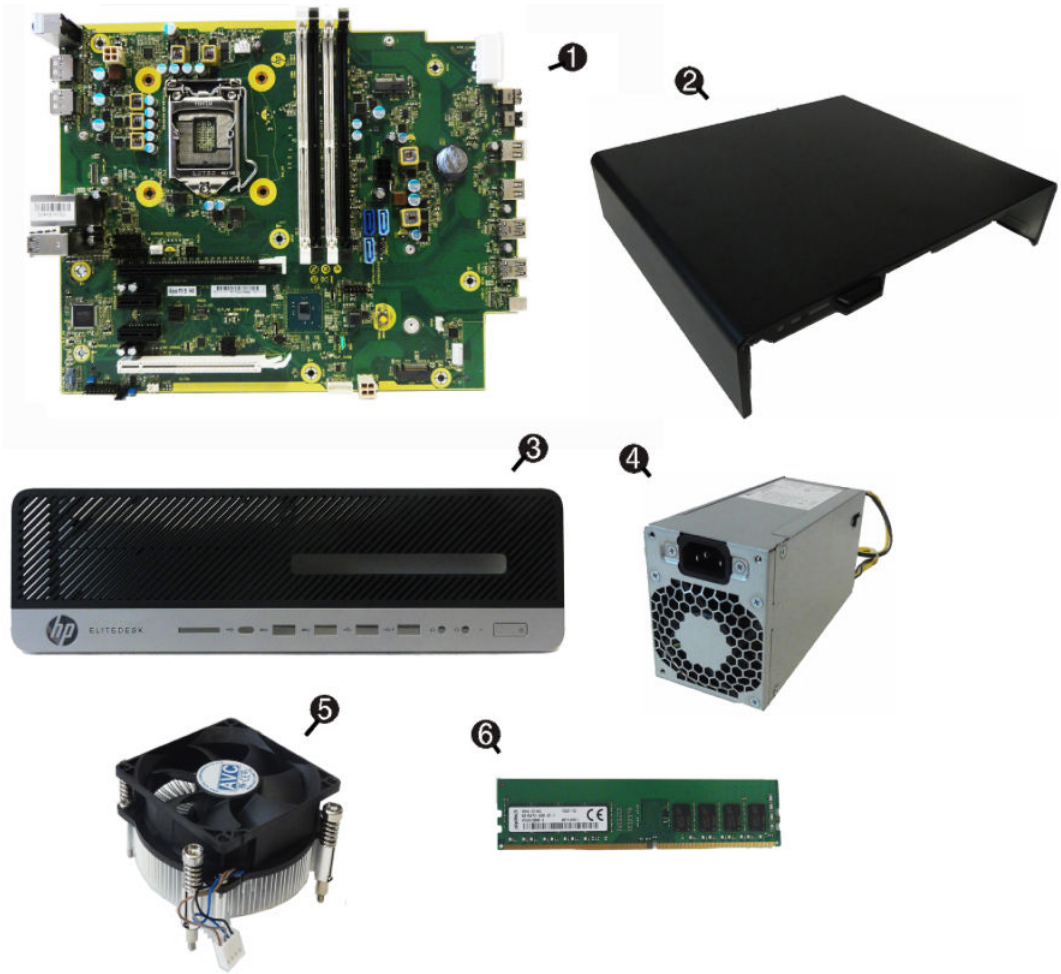

Item	Description
(1)	**System board** (includes replacement thermal material)
(2)	**Access panel**
(3)	**Front bezel**
(4)	**Power supply**
	180W, 92% efficient
	180W, 85% efficient
(5)	**Fan sink** (includes replacement thermal material)

Item	Description
(6)	**Memory modules** (PC4-2400, 2133-MHz)
	16-GB
	8-GB
	4-GB
*	**Processors** (include replacement thermal material; not illustrated)
	Intel Core i7-7700 processor
	Intel Core i5-7600 processor
	Intel Core i5-7500 processor
	Intel Core i3-7320 processor
	Intel Core i3-7300 processor
	Intel Core i3-7100 processor
	Intel Core i7-6700 processor
	Intel Core i5-6600 processor
	Intel Core i5-6500 processor
	Intel Core i3-6100 processor
	Intel Pentium G4620 processor
	Intel Pentium G4600 processor
	Intel Pentium G4560 processor
	Intel Pentium G4400 processor
	Intel Celeron G3950 processor
	Intel Celeron G3930 processor
	Intel Celeron G3900 processor

Misc parts

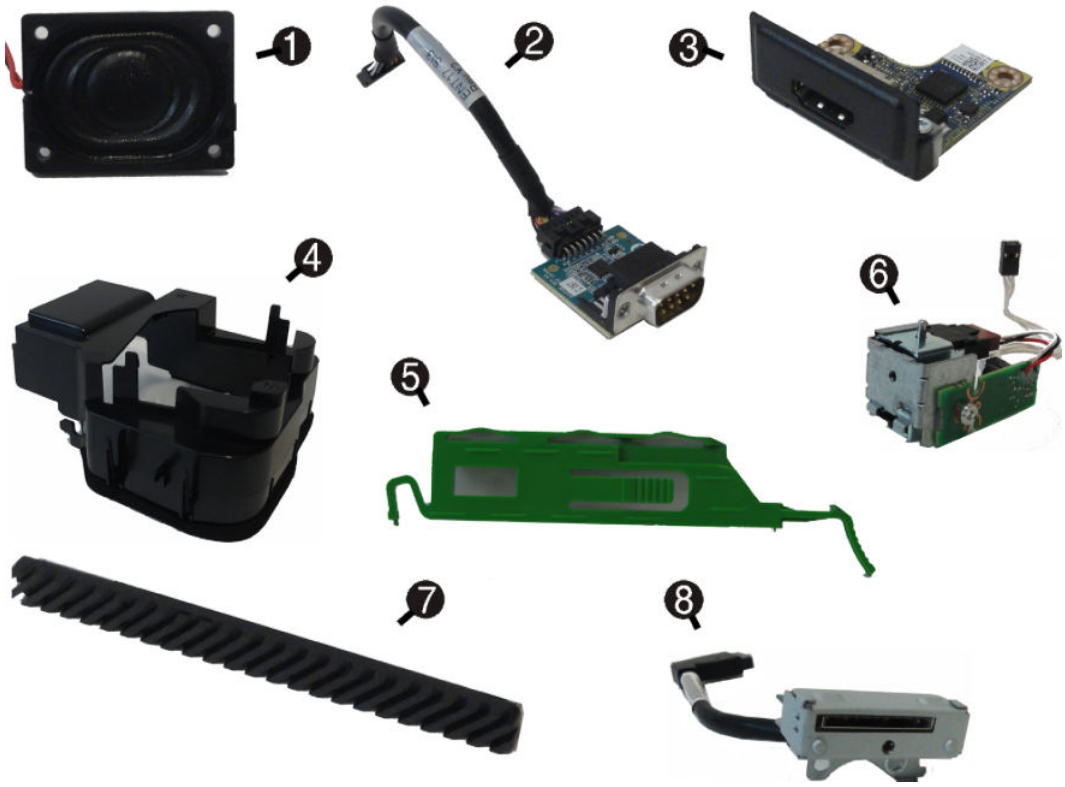

Item	Description
(1)	**Speaker**
(2)	**Optional serial port**
(3)	**Option board, HDMI**
(4)	**Air duct**
(5)	**Optical drive latch**
(6)	**Hood lock** (solenoid)
(7)	**Optical drive bezel**
(8)	**Card reader**
*	**Bezel blank for optical drive slot**
*	**Printer port**, PCIe card
*	**Stand**
*	**Hard drive isolation grommet**
*	**LED holder**
*	**Hood sensor**
*	**Rubber foot**
*	**Mouse**
	PS2, optical

Item	Description
	USB, laser
	USB, optical
	USB,antimicrobial
	USB, washable
	USB, hardened
	USB, grey
	Wireless
*	**Keyboards**
	PS/2 slim
	USB/PS2 washable
	USB antimicrobial
	USB slim
	USB grey
	Wireless keyboard, mouse, and dongle

Cables and adapters

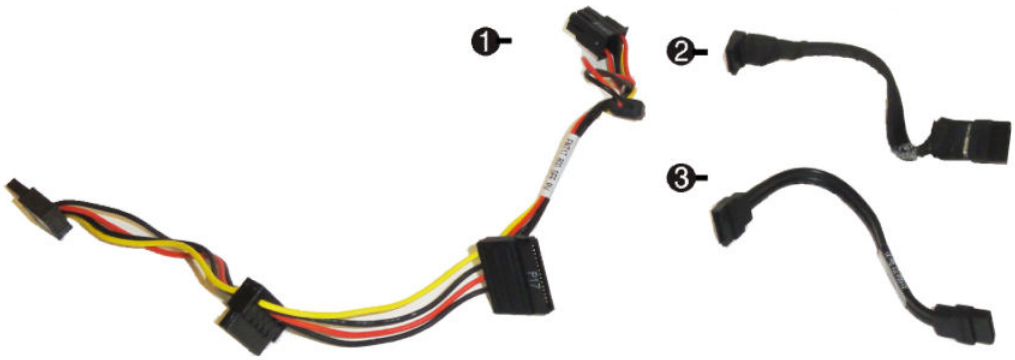

Item	Description
(1)	**SATA drive power cable**
(2)	**SATA data cable**, 6 inch, 1 straight end, 1 angled end
(3)	**SATA data cable**, 6 inch, 2 straight ends
*	**SATA data cable**, 14 inch, 1 straight end, 1 angled end
*	**Serial port cable**
*	**Serial/PS2 port cable**
*	**DisplayPort cable**, 1.8 m
*	**DVI to DVI cable**
*	**Internal antennas**
*	**Antenna cover**
*	**Adapters**
	DisplayPort to HDMI 1.4
	DisplayPort to VGA
	DisplayPort to DVI
	USB-C to USB 3.0
	USB 3.1 Type-C to DisplayPort

Boards, cards, and ports

Description
Graphics cards:
Nvidia GeForce GT730 2 GB PCIe x8
Nvidia GeForce GT720 1 GB PCIe x8
AMD Radeon™ RX 480 2 GB FH PCIe x16
AMD Radeon RX 460 2 GB FH PCIe x16

Description
AMD Radeon R7 450 4 GB FH PCIe x16 G5
Nvidia GTX 1080 8 GB FH PCIe x16
Graphics card holder bracket
NIC, Intel PRO/1000 Single Port GbE
WLAN modules
Intel 8265 802.11AC 2x2 Wi-Fi +Bluetooth M.2 Combo Card non-VPro
Intel 7265 802.11AC 2x2 Wi-Fi +Bluetooth M.2 Combo Card non-VPro
Intel 3168 802.11AC 2x2 Wi-Fi +Bluetooth M.2 Combo Card non-VPro
Option boards:
HDMI option board
DisplayPort option board
USB 3.1 Type C option board
VGA option board
Serial port
Serial/PS2 port
RS-232 module
RS-232 to PS2 module
Printer port, PCIe card
USB 3.1 Type-C connector, PCIe card

Drives

Description
Hard drives
2-TB, 7200-rpm, 3.5-inch
1-TB, 7200-rpm, 3.5-inch
1-TB, 7200-rpm, 2.5-inch
1-TB, 7200-rpm,. hybrid SSD, 3.5-inch
1-TB, 5400-rpm,. hybrid SSD, 3.5-inch
500 GB, 7200 rpm, 3.5-inch
500 GB, 7200 rpm, 7 mm
500-GB, 7200-rpm, OPAL2, self-encrypting drive (SED)
500-GB, 5400-rpm, FIPS
500-GB, 5400-rpm, hybrid SSD

Description
Solid-state drives, 2280, 2.5-inch
512-GB, FIPS-140-2
256-GB, FIPS-140-2
256-GB
128-GB
Solid-state drives, 2280, NVMe, M.2
1 TB, TLC
512-GB, MLC
512-GB, TLC
256-GB, MLC
256-GB, TLC
256-GB, PCIe
Optical drives, 9.5 mm
DVD±RW drive
DVD-ROM drive

3 Routine care, SATA drive guidelines, and disassembly preparation

This chapter provides general service information for the computer. Adherence to the procedures and precautions described in this chapter is essential for proper service.

⚠ **CAUTION:** When the computer is plugged into an AC power source, voltage is always applied to the system board. You must disconnect the power cord from the power source before opening the computer to prevent system board or component damage.

Electrostatic discharge information

A sudden discharge of static electricity from your finger or other conductor can destroy static-sensitive devices or microcircuitry. Often the spark is neither felt nor heard, but damage occurs. An electronic device exposed to electrostatic discharge (ESD) may not appear to be affected at all and can work perfectly throughout a normal cycle. The device may function normally for a while, but it has been degraded in the internal layers, reducing its life expectancy.

Networks built into many integrated circuits provide some protection, but in many cases, the discharge contains enough power to alter device parameters or melt silicon junctions.

Generating static

The following table shows that:

- Different activities generate different amounts of static electricity.
- Static electricity increases as humidity decreases.

	Relative Humidity		
Event	**55%**	**40%**	**10%**
Walking across carpet	7,500 V	15,000 V	35,000 V
Walking across vinyl floor	3,000 V	5,000 V	12,000 V
Motions of bench worker	400 V	800 V	6,000 V
Removing DIPs from plastic tube	400 V	700 V	2,000 V
Removing DIPs from vinyl tray	2,000 V	4,000 V	11,500 V
Removing DIPs from Styrofoam	3,500 V	5,000 V	14,500 V
Removing bubble pack from PCB	7,000 V	20,000 V	26,500 V
Packing PCBs in foam-lined box	5,000 V	11,000 V	21,000 V
These are then multi-packaged inside plastic tubes, trays, or Styrofoam.			

NOTE: 700 volts can degrade a product.

Preventing electrostatic damage to equipment

Many electronic components are sensitive to ESD. Circuitry design and structure determine the degree of sensitivity. The following packaging and grounding precautions are necessary to prevent damage to electric components and accessories.

- To avoid hand contact, transport products in static-safe containers such as tubes, bags, or boxes.
- Protect all electrostatic parts and assemblies with conductive or approved containers or packaging.
- Keep electrostatic sensitive parts in their containers until they arrive at static-free stations.
- Place items on a grounded surface before removing them from their container.
- Always be properly grounded when touching a sensitive component or assembly.
- Avoid contact with pins, leads, or circuitry.
- Place reusable electrostatic-sensitive parts from assemblies in protective packaging or conductive foam.

Personal grounding methods and equipment

Use the following equipment to prevent static electricity damage to equipment:

- **Wrist straps** are flexible straps with a maximum of one-megohm ± 10% resistance in the ground cords. To provide proper ground, a strap must be worn snug against bare skin. The ground cord must be connected and fit snugly into the banana plug connector on the grounding mat or workstation.
- **Heel straps/Toe straps/Boot straps** can be used at standing workstations and are compatible with most types of shoes or boots. On conductive floors or dissipative floor mats, use them on both feet with a maximum of one-megohm ± 10% resistance between the operator and ground.

Static Shielding Protection Levels

Method	Voltage
Antistatic plastic	1,500
Carbon-loaded plastic	7,500
Metallized laminate	15,000

Grounding the work area

To prevent static damage at the work area, use the following precautions:

- Cover the work surface with approved static-dissipative material. Provide a wrist strap connected to the work surface and properly grounded tools and equipment.
- Use static-dissipative mats, foot straps, or air ionizers to give added protection.
- Handle electrostatic sensitive components, parts, and assemblies by the case or PCB laminate. Handle them only at static-free work areas.
- Turn off power and input signals before inserting and removing connectors or test equipment.
- Use fixtures made of static-safe materials when fixtures must directly contact dissipative surfaces.
- Keep work area free of nonconductive materials such as ordinary plastic assembly aids and Styrofoam.
- Use field service tools, such as cutters, screwdrivers, and vacuums, that are conductive.

Recommended materials and equipment

Materials and equipment that are recommended for use in preventing static electricity include:

- Antistatic tape
- Antistatic smocks, aprons, or sleeve protectors
- Conductive bins and other assembly or soldering aids
- Conductive foam
- Conductive tabletop workstations with ground cord of one-megohm +/- 10% resistance
- Static-dissipative table or floor mats with hard tie to ground
- Field service kits
- Static awareness labels
- Wrist straps and footwear straps providing one-megohm +/- 10% resistance
- Material handling packages
- Conductive plastic bags
- Conductive plastic tubes
- Conductive tote boxes
- Opaque shielding bags
- Transparent metallized shielding bags
- Transparent shielding tubes

Operating guidelines

To prevent overheating and to help prolong the life of the computer:

- Keep the computer away from excessive moisture, direct sunlight, and extremes of heat and cold.
- Operate the computer on a sturdy, level surface. Leave a 10.2-cm (4-inch) clearance on all vented sides of the computer and above the monitor to permit the required airflow.
- Never restrict the airflow into the computer by blocking any vents or air intakes. Do not place the keyboard, with the keyboard feet down, directly against the front of the desktop unit as this also restricts airflow.
- Occasionally clean the air vents on all vented sides of the computer. Lint, dust, and other foreign matter can block the vents and limit the airflow. Be sure to unplug the computer before cleaning the air vents.
- Never operate the computer with the cover or side panel removed.
- Do not stack computers on top of each other or place computers so near each other that they are subject to each other's re-circulated or preheated air.
- If the computer is to be operated within a separate enclosure, intake and exhaust ventilation must be provided on the enclosure, and the same operating guidelines listed above will still apply.
- Keep liquids away from the computer and keyboard.

- Never cover the ventilation slots on the monitor with any type of material.
- Install or enable power management functions of the operating system or other software, including sleep states.

Routine care

General cleaning safety precautions

1. Never use solvents or flammable solutions to clean the computer.
2. Never immerse any parts in water or cleaning solutions; apply any liquids to a clean cloth and then use the cloth on the component.
3. Always unplug the computer when cleaning with liquids or damp cloths.
4. Always unplug the computer before cleaning the keyboard, mouse, or air vents.
5. Disconnect the keyboard before cleaning it.
6. Wear safety glasses equipped with side shields when cleaning the keyboard.

Cleaning the Computer Case

Follow all safety precautions in General cleaning safety precautions on page 15 before cleaning the computer.

To clean the computer case, follow the procedures described below:

- To remove light stains or dirt, use plain water with a clean, lint-free cloth or swab.
- For stronger stains, use a mild dishwashing liquid diluted with water. Rinse well by wiping it with a cloth or swab dampened with clear water.
- For stubborn stains, use isopropyl (rubbing) alcohol. No rinsing is needed as the alcohol will evaporate quickly and not leave a residue.
- After cleaning, always wipe the unit with a clean, lint-free cloth.
- Occasionally clean the air vents on the computer. Lint and other foreign matter can block the vents and limit the airflow.

Cleaning the keyboard

Follow all safety precautions in General cleaning safety precautions on page 15 before cleaning the keyboard.

To clean the tops of the keys or the keyboard body, follow the procedures described in Cleaning the Computer Case on page 15.

When cleaning debris from under the keys, review all rules in General cleaning safety precautions on page 15 before following these procedures:

⚠ **CAUTION:** Use safety glasses equipped with side shields before attempting to clean debris from under the keys.

- Visible debris underneath or between the keys may be removed by vacuuming or shaking.
- Canned, pressurized air may be used to clean debris from under the keys. Caution should be used as too much air pressure can dislodge lubricants applied under the wide keys.

- If you remove a key, use a specially designed key puller to prevent damage to the keys. This tool is available through many electronic supply outlets.

⚠ **CAUTION:** Never remove a wide leveled key (like the space bar) from the keyboard. If these keys are improperly removed or installed, the keyboard may not function properly.

- Cleaning under a key may be done with a swab moistened with isopropyl alcohol and squeezed out. Be careful not to wipe away lubricants necessary for proper key functions. Use tweezers to remove any fibers or dirt in confined areas. Allow the parts to air dry before reassembly.

Cleaning the monitor

- Wipe the monitor screen with a clean cloth moistened with water or with a towelette designed for cleaning monitors. Do not use sprays or aerosols directly on the screen; the liquid may seep into the housing and damage a component. Never use solvents or flammable liquids on the monitor.
- To clean the monitor body follow the procedures in Cleaning the Computer Case on page 15.

Cleaning the mouse

Before cleaning the mouse, ensure that the power to the computer is turned off.

- Clean the mouse ball by first removing the retaining plate and the ball from the housing. Pull out any debris from the ball socket and wipe the ball with a clean, dry cloth before reassembly.
- To clean the mouse body, follow the procedures in Cleaning the Computer Case on page 15.

Service considerations

Listed below are some of the considerations that you should keep in mind during the disassembly and assembly of the computer.

Power supply fan

The power supply fan is a variable-speed fan based on the temperature in the power supply.

⚠ **CAUTION:** The cooling fan is always on when the computer is in the “On” mode. The cooling fan is off when the computer is in “Standby,” “Suspend,” or “Off” modes.

You must disconnect the power cord from the power source before opening the computer to prevent system board or component damage.

Tools and software Requirements

To service the computer, you need the following:

- Torx T-15 screwdriver
- Torx T-15 screwdriver with small diameter shank (for certain front bezel removal)
- Flat-bladed screwdriver (may sometimes be used in place of the Torx screwdriver)
- Phillips #2 screwdriver
- Diagnostics software
- Tamper-resistant T-15 wrench

Screws

The screws used in the computer are not interchangeable. They may have standard or metric threads and may be of different lengths. If an incorrect screw is used during the reassembly process, it can damage the unit. HP strongly recommends that all screws removed during disassembly be kept with the part that was removed, then returned to their proper locations.

⚠ **CAUTION:** Metric screws have a black finish. U.S. screws have a silver finish and are used on hard drives only.

CAUTION: As each subassembly is removed from the computer, it should be placed away from the work area to prevent damage.

Cables and connectors

Most cables used throughout the unit are flat, flexible cables. These cables must be handled with care to avoid damage. Apply only the tension required to seat or unseat the cables during insertion or removal from the connector. Handle cables by the connector whenever possible. In all cases, avoid bending or twisting the cables, and ensure that the cables are routed in such a way that they cannot be caught or snagged by parts being removed or replaced.

⚠ **CAUTION:** When servicing this computer, ensure that cables are placed in their proper location during the reassembly process. Improper cable placement can damage the computer.

Hard Drives

Handle hard drives as delicate, precision components, avoiding all physical shock and vibration. This applies to failed drives as well as replacement spares.

- If a drive must be mailed, place the drive in a bubble-pack mailer or other suitable protective packaging and label the package “Fragile: Handle With Care.”
- Do not remove hard drives from the shipping package for storage. Keep hard drives in their protective packaging until they are actually mounted in the computer.
- Avoid dropping drives from any height onto any surface.
- If you are inserting or removing a hard drive, turn off the computer. Do not remove a hard drive while the computer is on or in standby mode.
- Before handling a drive, ensure that you are discharged of static electricity. While handling a drive, avoid touching the connector.
- Do not use excessive force when inserting a drive.
- Avoid exposing a hard drive to liquids, temperature extremes, or products that have magnetic fields such as monitors or speakers.

Lithium coin cell battery

The battery that comes with the computer provides power to the real-time clock and has a minimum lifetime of about three years.

See the appropriate removal and replacement chapter for the chassis you are working on in this guide for instructions on the replacement procedures.

⚠ **WARNING!** This computer contains a lithium battery. There is a risk of fire and chemical burn if the battery is handled improperly. Do not disassemble, crush, puncture, short external contacts, dispose in water or fire, or expose it to temperatures higher than 140ºF (60ºC). Do not attempt to recharge the battery.

NOTE: Batteries, battery packs, and accumulators should not be disposed of together with the general household waste. In order to forward them to recycling or proper disposal, please use the public collection system or return them to HP, their authorized partners, or their agents.

SATA hard drives

Serial ATA Hard Drive Characteristics	
Number of pins/conductors in data cable	7/7
Number of pins in power cable	15
Maximum data cable length	39.37 in (100 cm)
Data interface voltage differential	400-700 mV
Drive voltages	3.3 V, 5 V, 12 V
Jumpers for configuring drive	N/A
Data transfer rate	6.0 Gb/s

SATA hard drive cables

SATA data cable

Always use an HP approved SATA 6.0 Gb/s cable as it is fully backwards compatible with the SATA 1.5 Gb/s drives.

Current HP desktop products ship with SATA 6.0 Gb/s hard drives.

SATA data cables are susceptible to damage if overflexed. Never crease a SATA data cable and never bend it tighter than a 30 mm (1.18 in) radius.

The SATA data cable is a thin, 7-pin cable designed to transmit data for only a single drive.

SMART ATA drives

The Self Monitoring Analysis and Recording Technology (SMART) ATA drives for the HP Personal Computers have built-in drive failure prediction that warns the user or network administrator of an impending failure or crash of the hard drive. The SMART drive tracks fault prediction and failure indication parameters such as reallocated sector count, spin retry count, and calibration retry count. If the drive determines that a failure is imminent, it generates a fault alert.

Cable management

Always follow good cable management practices when working inside the computer.

- Keep cables away from major heat sources like the heat sink.
- Do not jam cables on top of expansion cards or memory modules. Printed circuit cards like these are not designed to take excessive pressure on them.
- Keep cables clear of sliding or moveable parts to prevent them from being cut or crimped when the parts are moved.
- When folding a flat ribbon cable, never fold to a sharp crease. Sharp creases may damage the wires.
- Some flat ribbon cables come prefolded. Never change the folds on these cables.
- Do not bend any cable sharply. A sharp bend can break the internal wires.
- Never bend a SATA data cable tighter than a 30 mm (1.18 in) radius.
- Never crease a SATA data cable.
- Do not rely on components like the drive cage, power supply, or computer cover to push cables down into the chassis. Always position the cables to lay properly by themselves.

4 Removal and replacement procedures – small form factor (SFF) chassis

Adherence to the procedures and precautions described in this chapter is essential for proper service. After completing all necessary removal and replacement procedures, run the Diagnostics utility to verify that all components operate properly.

NOTE: Not all features listed in this guide are available on all computers.

Preparation for disassembly

See Routine care, SATA drive guidelines, and disassembly preparation on page 12 for initial safety procedures.

1. Remove/disengage any security devices that prohibit opening the computer.
2. Close any open software applications.
3. Exit the operating system.
4. Remove any compact disc or media card from the computer.
5. Turn off the computer and any peripheral devices that are connected to it.

CAUTION: Turn off the computer before disconnecting any cables.

Regardless of the power-on state, voltage is always present on the system board as long as the system is plugged into an active AC outlet. In some systems the cooling fan is on even when the computer is in the “Standby,” or “Suspend” modes. The power cord should always be disconnected before servicing a unit.

6. Disconnect the power cord from the electrical outlet and then from the computer.
7. Disconnect all peripheral device cables from the computer.

NOTE: During disassembly, label each cable as you remove it, noting its position and routing. Keep all screws with the units removed.

CAUTION: The screws used in the computer are of different thread sizes and lengths; using the wrong screw in an application may damage the unit.

8. If the computer is on a stand, remove the computer from the stand.

Access panel

1. Prepare the computer for disassembly (Preparation for disassembly on page 20).
2. Slide the access panel release lever to the left **(1)** so that it locks into place. Then slide the access panel back **(2)** and lift it off the computer **(3)**.

To install the access panel, reverse the removal procedure.

Front bezel

1. Prepare the computer for disassembly (Preparation for disassembly on page 20).
2. Remove the access panel (Access panel on page 21).
3. Lift up the three tabs on the top of the bezel **(1)**, and then rotate the bezel off the chassis **(2)**.

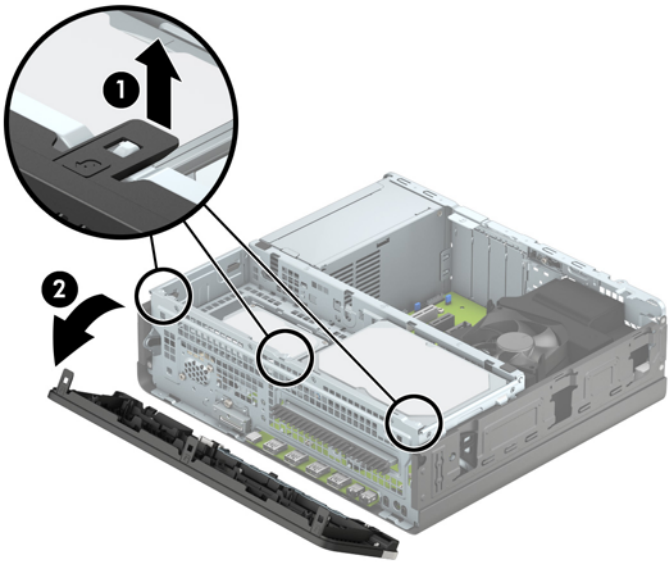

To install the front bezel, reverse the removal procedure.

Slim optical drive bezel blank

On some models, there is a bezel blank covering the slim optical drive bay. Remove the bezel blank before installing an optical drive. To remove the bezel blank:

1. Prepare the computer for disassembly (Preparation for disassembly on page 20).
2. Remove the access panel (Access panel on page 21).
3. Remove the front bezel (Front bezel on page 21).
4. Then press inward on the tab on the left side of the blank **(1)**, and then rotate the blank off the front bezel **(2)**.

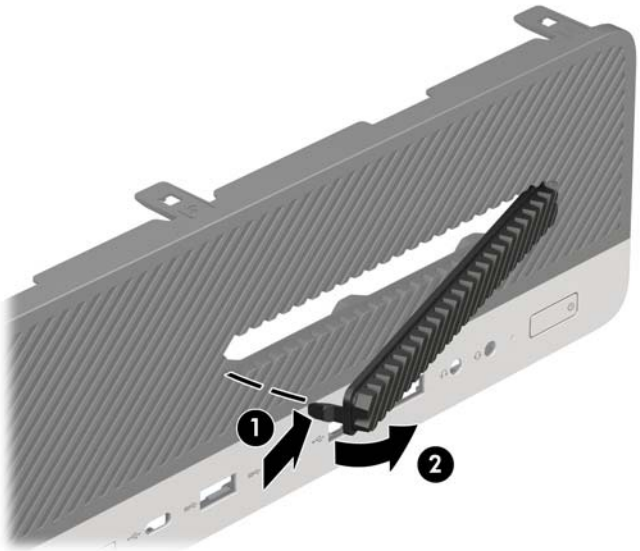

NOTE: After removing the slim optical drive bezel blank and installing a slim optical drive, you can install an optional bezel trim piece (available from HP) that surrounds the front of the slim optical drive.

Front bezel dust filter

Some models are equipped with an optional front bezel dust filter. You must periodically clean the dust filter so that the dust collected on the filter does not impede air flow through the computer.

NOTE: The optional front bezel dust filter is available from HP.

To remove, clean, and replace the dust filter:

1. Prepare the computer for disassembly (Preparation for disassembly on page 20).
2. To remove the dust filter, use your fingers to separate the filter from the front bezel at the tab locations shown below.

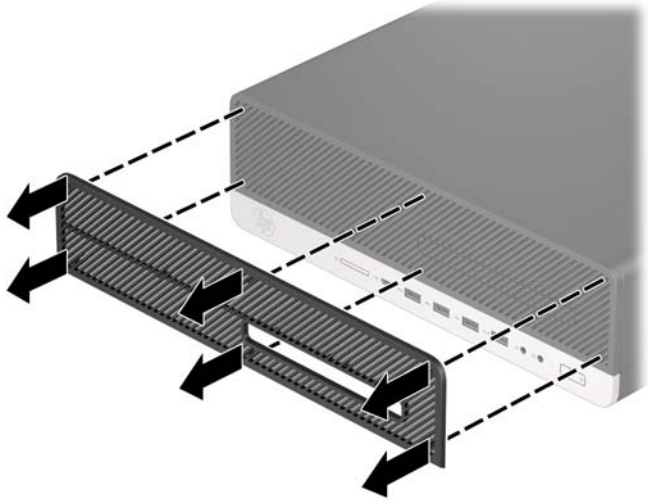

3. Use a soft brush or cloth to clean dust from the filter. If heavily soiled, rinse the filter clean with water.
4. To replace the dust filter, press the filter firmly onto the front bezel at the tab locations shown below.

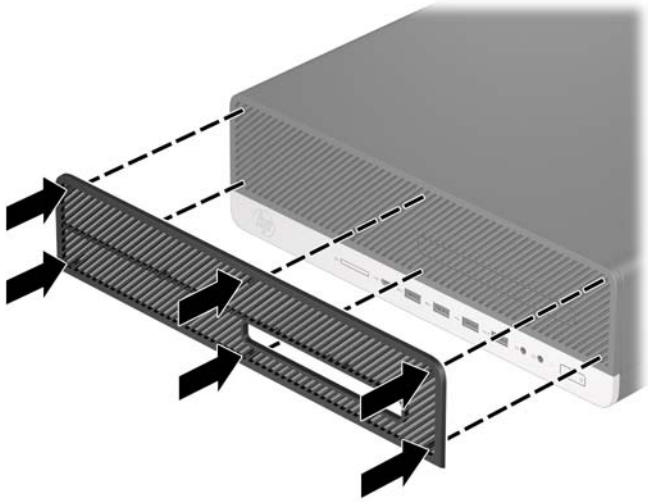

System board connections

Refer to the following illustration and table to identify the system board connectors for your model.

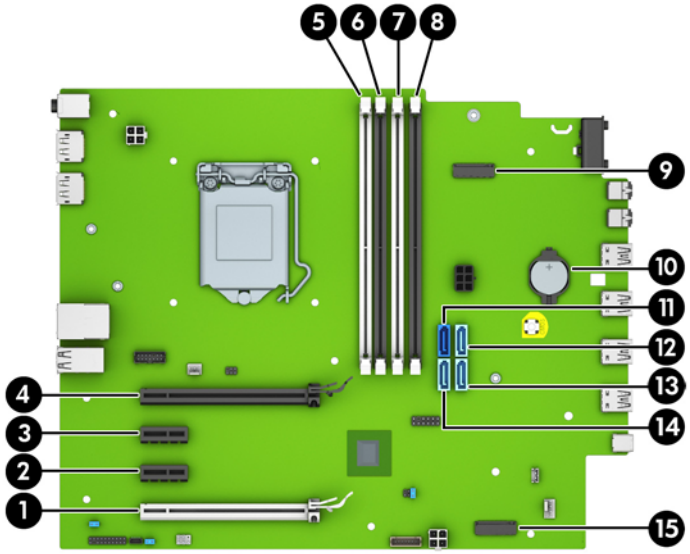

Item	System board connector	System board label	Color	Component
1	PCI Express x16 downshifted to a x4	X4PCIEXP	White	Expansion card
2	PCI Express x1	X1PCIEXP2	Black	Expansion card
3	PCI Express x1	X1PCIEXP1	Black	Expansion card
4	PCI Express x16	X16PCIEXP	Black	Expansion card
5	DIMM4 (Channel A)	DIMM4	White	Memory module
6	DIMM3 (Channel A)	DIMM3	Black	Memory module
7	DIMM2 (Channel B)	DIMM2	White	Memory module
8	DIMM1 (Channel B)	DIMM1	Black	Memory module
9	M.2 WLAN	WLAN	Black	M.2 WLAN card
10	Battery	BAT	Black	Battery
11	SATA 3.0	SATA0	Dark blue	Primary hard drive
12	SATA 3.0	SATA3	Light blue	Any SATA device other than the primary hard drive
13	SATA 3.0	SATA2	Light blue	Any SATA device other than the primary hard drive
14	SATA 3.0	SATA1	Light blue	Any SATA device other than the primary hard drive
15	M.2 SSD	SSD	Black	M.2 SSD storage card

Memory

The computer comes with double data rate 4 synchronous dynamic random access memory (DDR4-SDRAM) dual inline memory modules (DIMMs).

The memory sockets on the system board are populated with at least one preinstalled memory module. To achieve the maximum memory support, you can populate the system board with up to 64 GB of memory configured in a high-performing dual-channel mode.

For proper system operation, the DIMMs must adhere to the following specifications:

- Industry-standard 288-pin
- Unbuffered non-ECC PC4-19200 DDR4-2400 MHz-compliant
- 1.2 volt DDR4-SDRAM memory modules
- CAS latency 17 DDR4 2400 MHz (17-17-17 timing)
- Mandatory JEDEC SPD information

The computer supports the following:

- 512 Mb, 1 Gb, 2 Gb, and 4 Gb non-ECC memory technologies
- Single-sided and double-sided memory modules
- Memory modules constructed with x8 and x16 DDR devices; memory modules constructed with x4 SDRAM are not supported

NOTE: The system does not operate properly if you install unsupported memory modules.

Populating DIMM sockets

There are four memory sockets on the system board, with two sockets per channel. The sockets are labeled DIMM1, DIMM2, DIMM3, and DIMM4. Sockets DIMM1 and DIMM2 operate in memory channel B. Sockets DIMM3 and DIMM4 operate in memory channel A.

The system will automatically operate in single-channel mode, dual-channel mode, or flex mode, depending on how the DIMMs are installed.

NOTE: Single-channel and unbalanced dual-channel memory configurations will result in inferior graphics performance.

- The system will operate in single-channel mode if the DIMM sockets are populated in one channel only.
- The system will operate in a higher-performing dual-channel mode if the total memory capacity of the DIMMs in Channel A is equal to the total memory capacity of the DIMMs in Channel B. The technology and device width can vary between the channels. For example, if Channel A is populated with two 1 GB DIMMs and Channel B is populated with one 2 GB DIMM, the system will operate in dual-channel mode.
- The system will operate in flex mode if the total memory capacity of the DIMMs in Channel A is not equal to the total memory capacity of the DIMMs in Channel B. In flex mode, the channel populated with the least amount of memory describes the total amount of memory assigned to dual channel and the remainder is assigned to single channel. For optimal speed, the channels should be balanced so that the largest amount of memory is spread between the two channels. If one channel will have more memory than the other, the larger amount should be assigned to Channel A. For example, if you are populating the sockets with one 2 GB DIMM, and three 1 GB DIMMs, Channel A should be populated with the 2 GB

DIMM and one 1 GB DIMM, and Channel B should be populated with the other two 1 GB DIMMs. With this configuration, 4 GB will run as dual-channel and 1 GB will run as single-channel.

- In any mode, the maximum operational speed is determined by the slowest DIMM in the system.

Removing and installing DIMMs

CAUTION: You must disconnect the power cord and wait approximately 30 seconds for the power to drain before adding or removing memory modules. Regardless of the power-on state, voltage is always supplied to the memory modules as long as the computer is plugged into an active AC outlet. Adding or removing memory modules while voltage is present may cause irreparable damage to the memory modules or system board.

The memory module sockets have gold-plated metal contacts. When upgrading the memory, it is important to use memory modules with gold-plated metal contacts to prevent corrosion and/or oxidation resulting from having incompatible metals in contact with each other.

Static electricity can damage the electronic components of the computer or optional cards. Before beginning these procedures, ensure that you are discharged of static electricity by briefly touching a grounded metal object.

When handling a memory module, be careful not to touch any of the contacts. Doing so may damage the module.

1. Prepare the computer for disassembly (Preparation for disassembly on page 20).
2. Remove the access panel (Access panel on page 21).
3. To remove a memory module, open both latches of the memory module socket **(1)**, and then remove the memory module from the socket **(2)**.

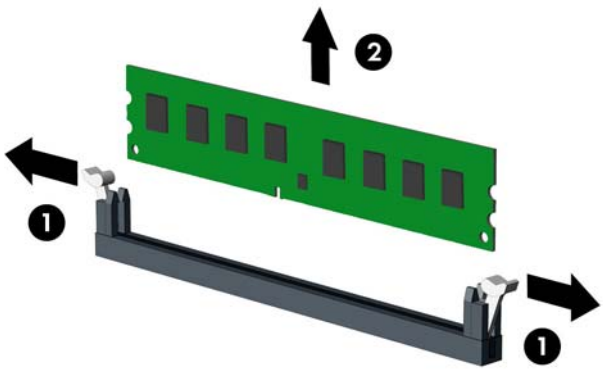

4. To install a memory module, open both latches of the memory module socket **(1)**, and insert the memory module into the socket **(2)**.

NOTE: A memory module can be installed in only one way. Match the notch on the module with the tab on the memory socket.

Populate the black DIMM sockets before the white DIMM sockets.

For maximum performance, populate the sockets so that the memory capacity is spread as equally as possible between Channel A and Channel B.

5. Push the module down into the socket, ensuring that the module is fully inserted and properly seated. Make sure the latches are in the closed position **(3)**.

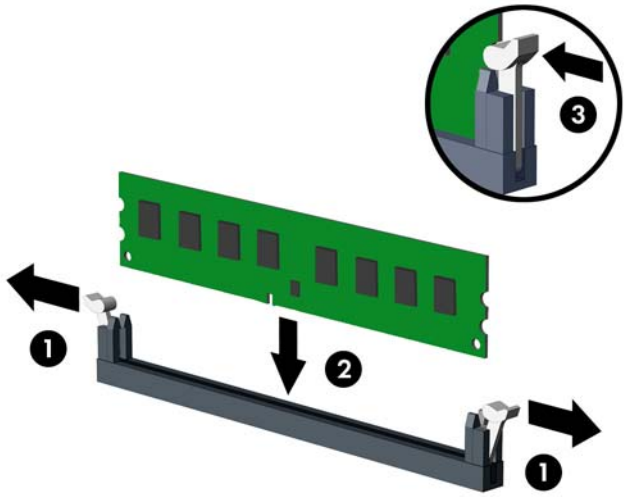

6. Replace the access panel.
7. If the computer was on a stand, replace the stand.
8. Reconnect the power cord and turn on the computer.
9. Lock any security devices that were disengaged when the access panel was removed.

The computer should automatically recognize the additional memory the next time you turn on the computer.

Expansion card

For a list of available expansion cards, see Boards, cards, and ports on page 9.

The computer has two PCI Express x1 expansion sockets, one PCI Express x16 expansion socket, and one PCI Express x16 expansion socket that is downshifted to a x4 socket.

NOTE: The PCI Express sockets support only low profile cards.

You can install a PCI Express x1, x4, x8, or x16 expansion card in the PCI Express x16 socket.

For dual graphics card configurations, the first (primary) card must be installed in the PCI Express x16 socket that is NOT downshifted to a x4.

To remove, replace, or add an expansion card:

1. Prepare the computer for disassembly (Preparation for disassembly on page 20).
2. Remove the access panel (Access panel on page 21).
3. Locate the correct vacant expansion socket on the system board and the corresponding expansion slot on the back of the computer chassis.
4. Release the slot cover retention latch that secures the slot covers by lifting the tab on the latch and rotating the latch to the open position.

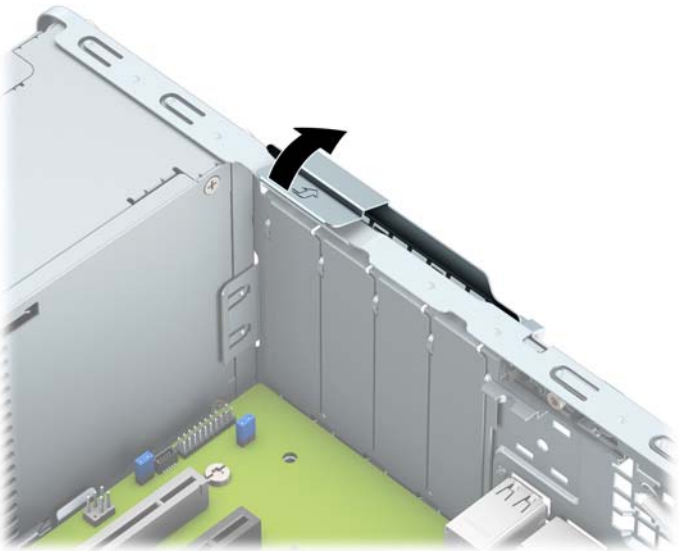

5. Before installing an expansion card, remove the expansion slot cover or the existing expansion card.

NOTE: Before removing an installed expansion card, disconnect any cables that may be attached to the expansion card.

   a. If you are installing an expansion card in a vacant socket, remove the appropriate expansion slot cover on the back of the chassis. Pull the slot cover straight up then away from the inside of the chassis.

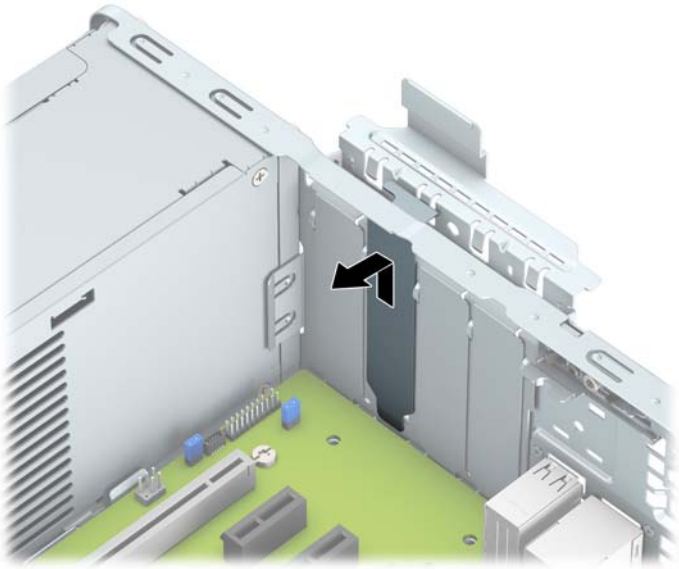

b. If you are removing a PCI Express x1 card, hold the card at each end and carefully rock it back and forth until the connectors pull free from the socket. Lift the card straight up (1), and then away from the inside of the chassis (2) to remove it. Be sure not to scrape the card against other components.

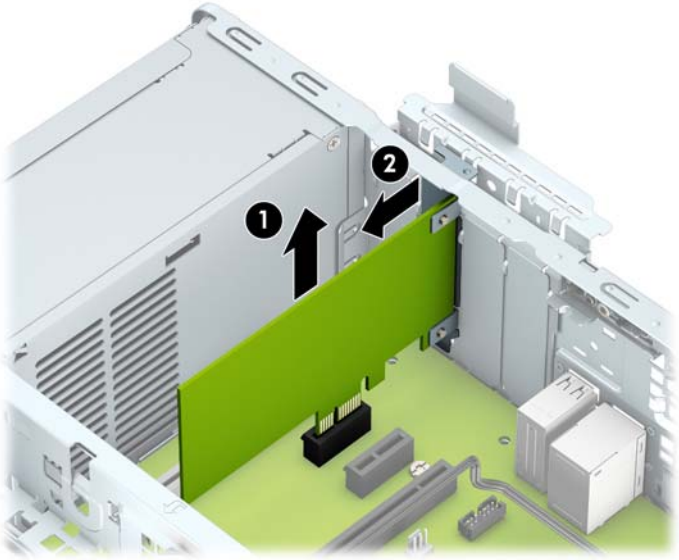

c. If you are removing a PCI Express x16 card, pull the retention arm on the back of the expansion socket away from the card **(1)** and carefully rock the card back and forth until the connectors pull free from the socket. Lift the card straight up **(2)**, and then away from the inside of the chassis **(3)** to remove it. Be sure not to scrape the card against other components.

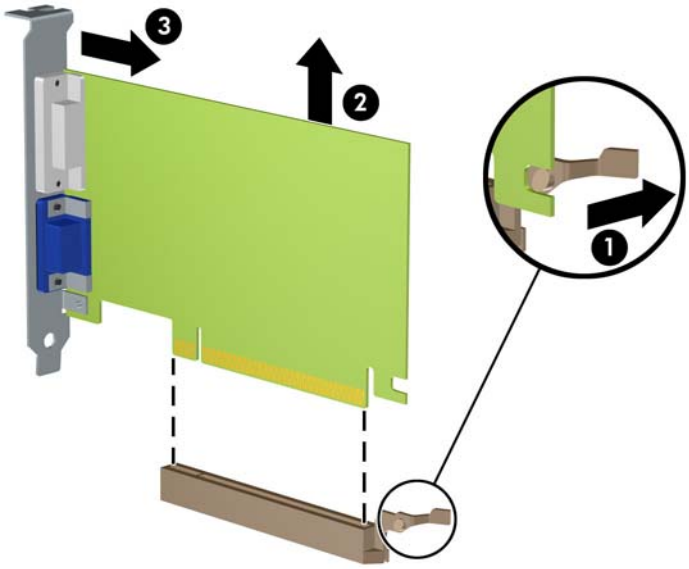

6. Store the removed card in anti-static packaging.
7. If you are not installing a new expansion card, install an expansion slot cover to close the open slot.

IMPORTANT: After removing an expansion card, you must replace it with a new card or expansion slot cover for proper cooling of internal components during operation.

8. To install a new expansion card, hold the card just above the expansion socket on the system board then move the card toward the rear of the chassis **(1)** so that the bottom of the bracket on the card slides into the small slot on the chassis. Press the card straight down into the expansion socket on the system board **(2)**.

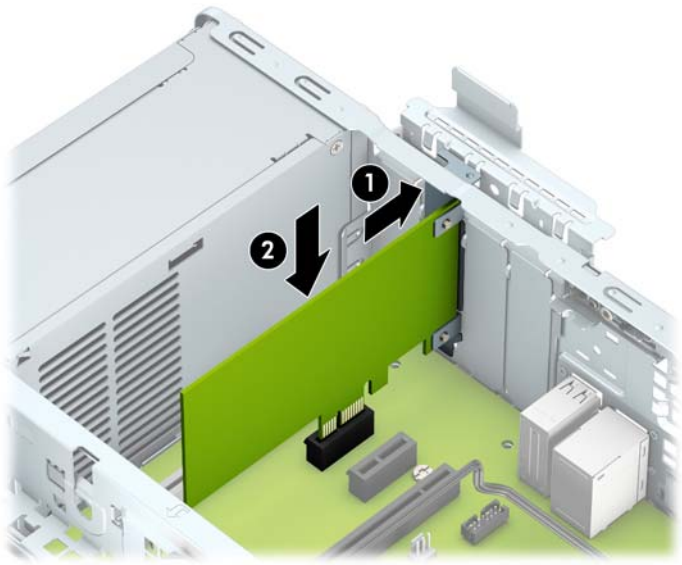

NOTE: When installing an expansion card, press firmly on the card so that the whole connector is seated properly in the expansion card socket.

9. Rotate the slot cover retention latch back in place to secure the expansion card.

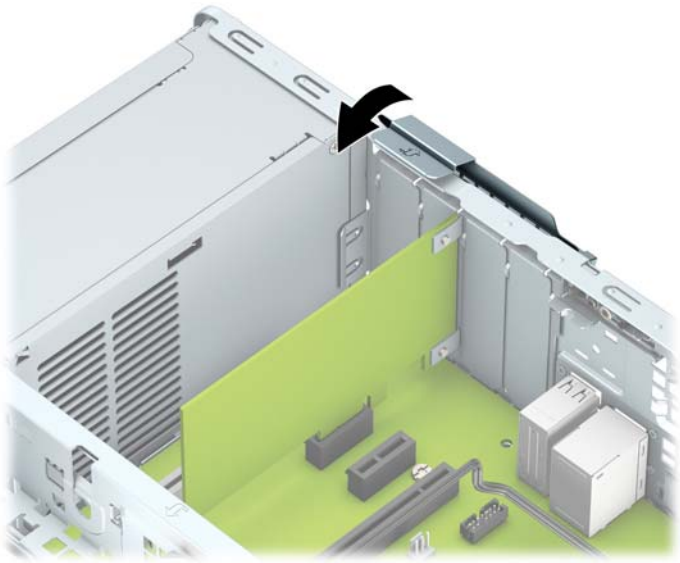

10. Connect external cables to the installed card, if needed. Connect internal cables to the system board, if needed.

Drives

For a list of available drives, see Drives on page 10.

Drive positions

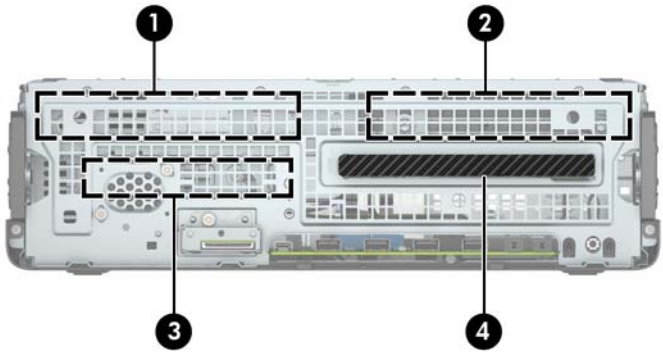

Drive positions	
1	3.5-inch secondary hard drive bay
2	3.5-inch primary hard drive bay
3	2.5-inch hard drive bay
4	9.5 mm slim optical drive bay

NOTE: The drive configuration on your computer may be different than the drive configuration shown above.

Installing and Removing Drives

When installing drives, follow these guidelines:

- The primary Serial ATA (SATA) hard drive must be connected to the dark blue primary SATA connector on the system board labeled SATA0.
- Connect secondary hard drives and optical drives to one of the light blue SATA connectors on the system board (labeled SATA1, SATA2, and SATA3).

IMPORTANT: To prevent loss of work and damage to the computer or drive:

If you are inserting or removing a drive, shut down the operating system properly, turn off the computer, and unplug the power cord. Do not remove a drive while the computer is on or in standby mode.

Before handling a drive, be sure that you are discharged of static electricity. While handling a drive, avoid touching the connector.

Handle a drive carefully; do not drop it.

Do not use excessive force when inserting a drive.

Avoid exposing a hard drive to liquids, temperature extremes, or products that have magnetic fields such as monitors or speakers.

If a drive must be mailed, place the drive in a bubble-pack mailer or other protective packaging and label the package “Fragile: Handle With Care.”

Removing a 9.5 mm slim optical drive

CAUTION: All removable media should be taken out of a drive before removing the drive from the computer.

1. Prepare the computer for disassembly (Preparation for disassembly on page 20).
2. Remove the access panel (Access panel on page 21).
3. Disconnect the power cable (1) and data cable (2) from the rear of the optical drive.

IMPORTANT: When removing the cables, pull the tab or connector instead of the cable itself to avoid damaging the cable.

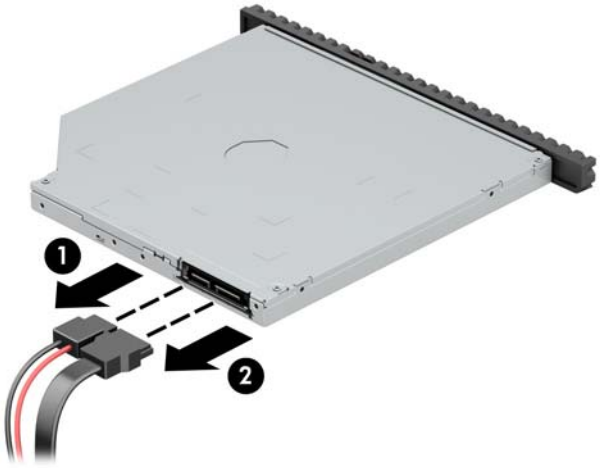

4. Push the green release latch on the right rear side of the drive toward the center of the drive **(1)**, and then slide the drive forward and out of the bay **(2)**.

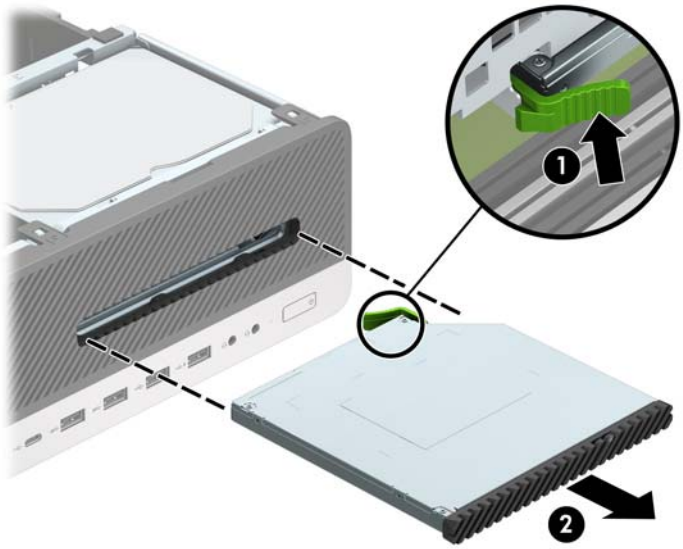

Installing a 9.5 mm slim optical drive

1. Prepare the computer for disassembly (Preparation for disassembly on page 20).
2. Remove the access panel (Access panel on page 21).
3. If you are installing a slim optical drive in a bay covered by a bezel blank, remove the front bezel and then remove the bezel blank. See Slim optical drive bezel blank on page 22 for more information.
4. Align the small pin on the release latch with the small hole on the side of the drive and press the latch firmly onto the drive.

5. Slide the optical drive through the front bezel all the way into the bay **(1)** so that the latch on the rear of the drive locks into place **(2)**.

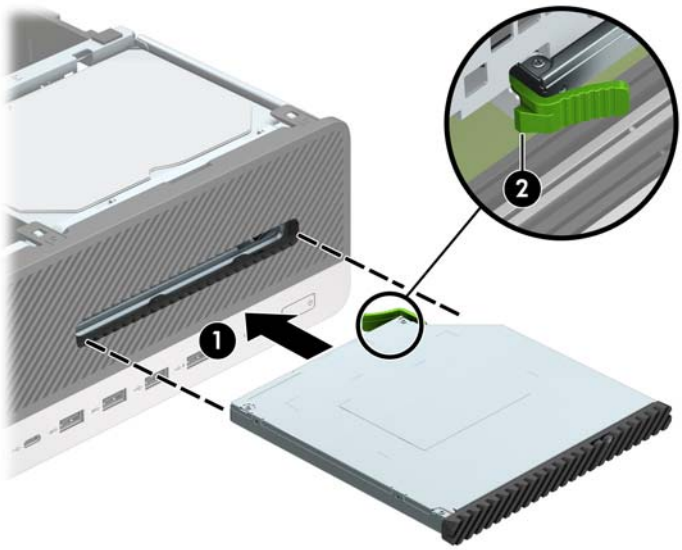

6. Connect the power cable **(1)** and data cable **(2)** to the rear of the drive.

7. Connect the opposite end of the data cable to one of the light blue SATA connectors on the system board labeled SATA1, SATA2, or SATA3.

NOTE: Refer to System board connections on page 24 for an illustration of the system board drive connectors.

8. Reassemble the computer.

Removing a 3.5-inch hard drive

NOTE: Before you remove the old hard drive, be sure to back up the data from the old hard drive so that you can transfer the data to the new hard drive.

There are two 3.5-inch hard drive bays. The procedure for removing a 3.5-inch hard drive is the same for each drive bay.

1. Prepare the computer for disassembly (Preparation for disassembly on page 20).
2. Remove the access panel (Access panel on page 21).

3. Disconnect the power cable **(1)** and data cable **(2)** from the rear of the hard drive.

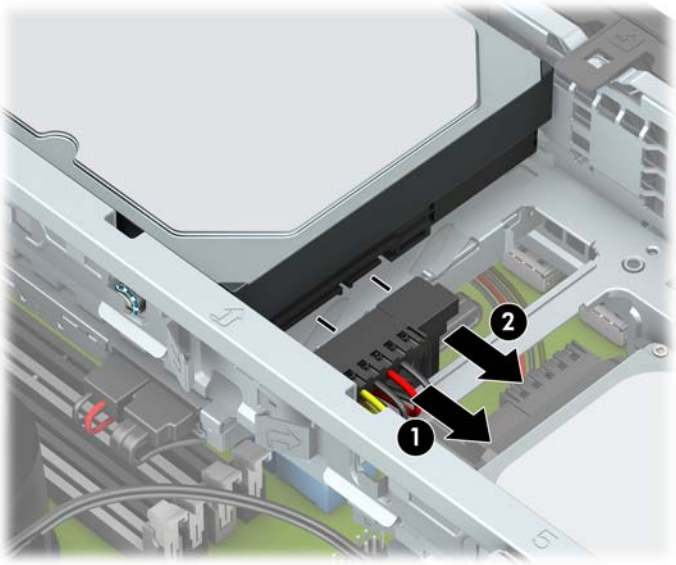

4. Pull the release lever next to the rear of the hard drive outward **(1)**. While pulling the release lever out, lift the rear of the drive up **(2)**, and then slide the front of the drive back and lift it out of the bay **(3)**.

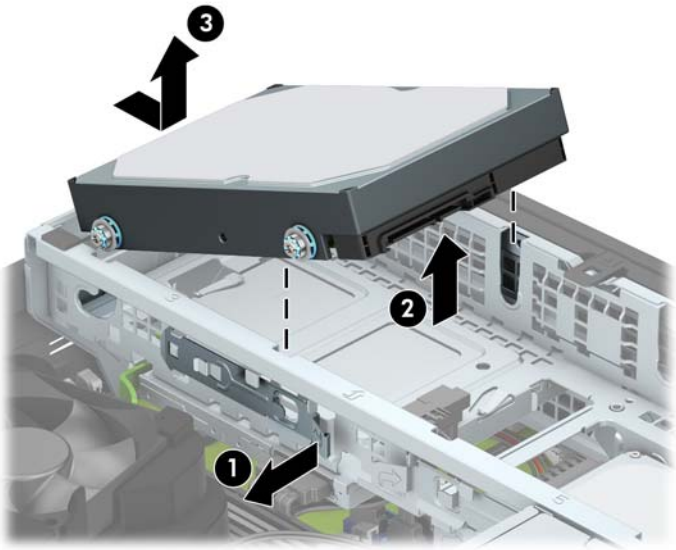

5. Remove the four mounting screws (two on each side) from the old drive. You will need these screws if you install a new drive.

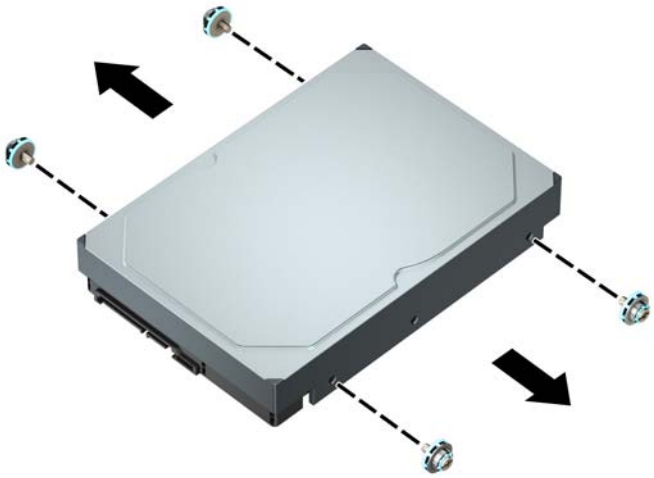

Installing a 3.5-inch hard drive

NOTE: There are two 3.5-inch hard drive bays. The procedure for installing a 3.5-inch hard drive is the same for each drive bay.

1. Prepare the computer for disassembly (Preparation for disassembly on page 20).
2. Remove the access panel (Access panel on page 21).
3. Install mounting screws on the sides of the hard drive using standard 6-32 silver-and-blue mounting screws.

   NOTE: If replacing a 3.5-inch hard drive, transfer the mounting screws from the old hard drive to the new hard drive.

   If you are adding a second 3.5-inch hard drive, you can purchase extra mounting screws from HP.

   - Install four silver-and-blue 6-32 mounting screws (two on each side of the drive).

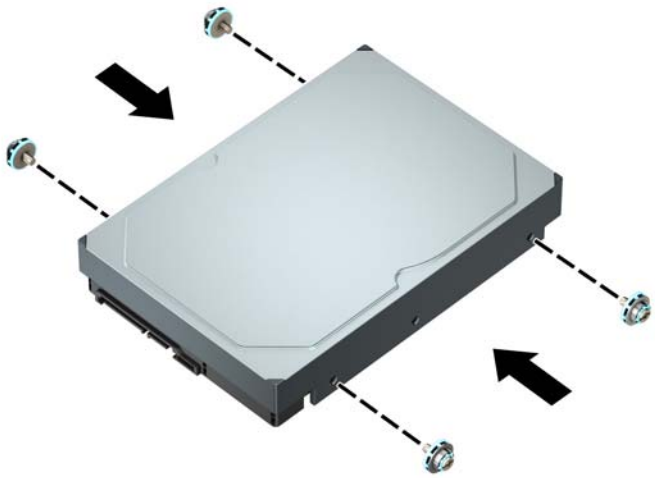

   - You can also install a 2.5-inch hard drive into a 3.5-inch drive bay using an adapter bracket similar to the example shown below.
     – Slide the 2.5-inch drive into the 3.5-inch adapter bracket.

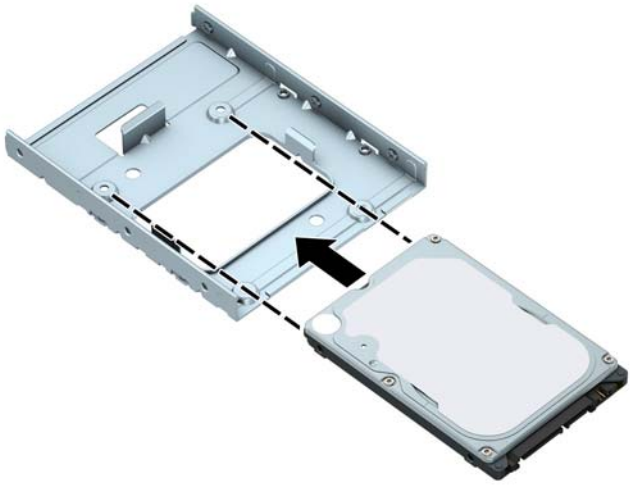

– Secure the drive to the bay adapter bracket by installing four black M3 adapter bracket screws through the underside of the bracket and into the drive.

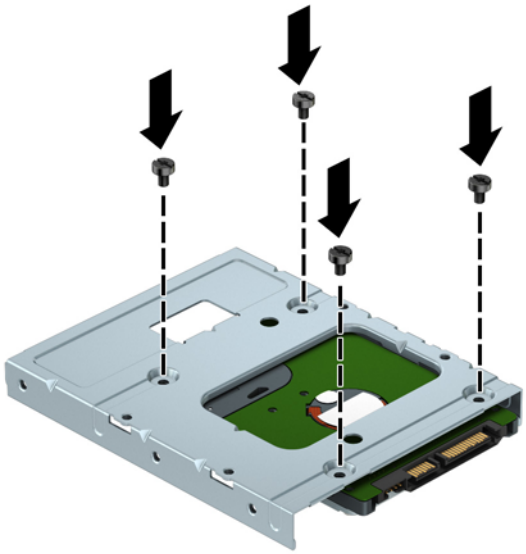

– Install four 6-32 silver-and-blue mounting screws in the adapter bracket (two on each side of the bracket).

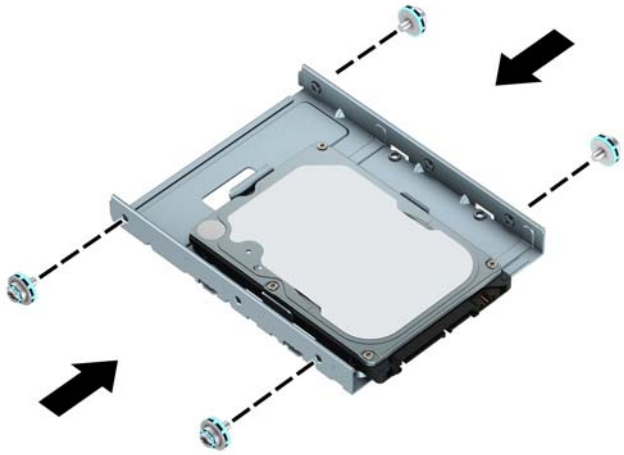

4. Align the mounting screws on the front of the hard drive with the slots on the drive cage and press the front of the drive down and forward into the bay **(1)**. Then press the rear of the drive down into the drive bay **(2)** to lock it in place.

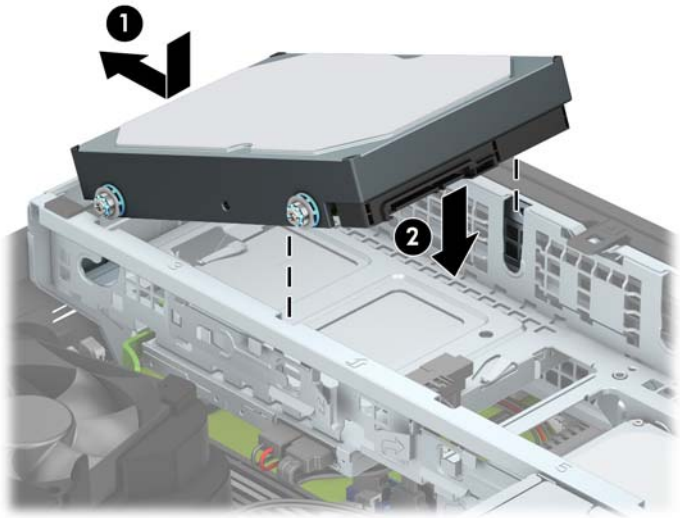

5. Connect the power cable **(1)** and data cable **(2)** to the rear of the hard drive.

NOTE: If the 3.5-inch hard drive is the primary drive, connect the other end of the data cable to the dark blue SATA connector on the system board labeled SATA0. If it is a secondary hard drive, connect the other end of the data cable to one of the light blue SATA connectors on the system board.

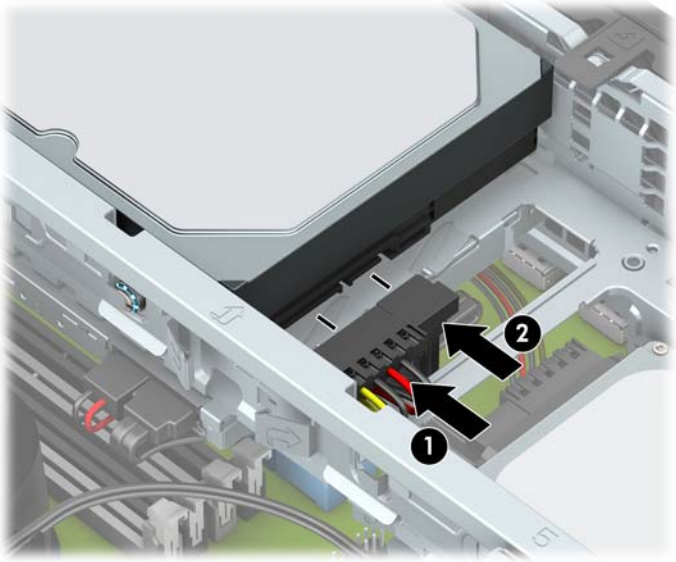

6. Reassemble the computer.

Hard drive cage

1. Prepare the computer for disassembly (Preparation for disassembly on page 20).
2. Remove the access panel (Access panel on page 21).
3. Rotate the drive cage to its upright position.

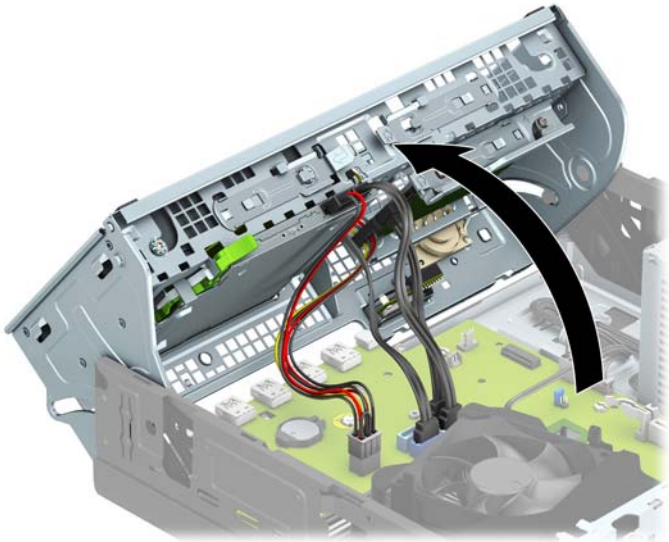

Removing a 2.5-inch hard drive

1. Prepare the computer for disassembly (Preparation for disassembly on page 20).
2. Remove the access panel (Access panel on page 21).
3. Rotate the hard drive cage to its upright position (Hard drive cage on page 41).
4. Disconnect the power cable **(1)** and data cable **(2)** from the rear of the hard drive.

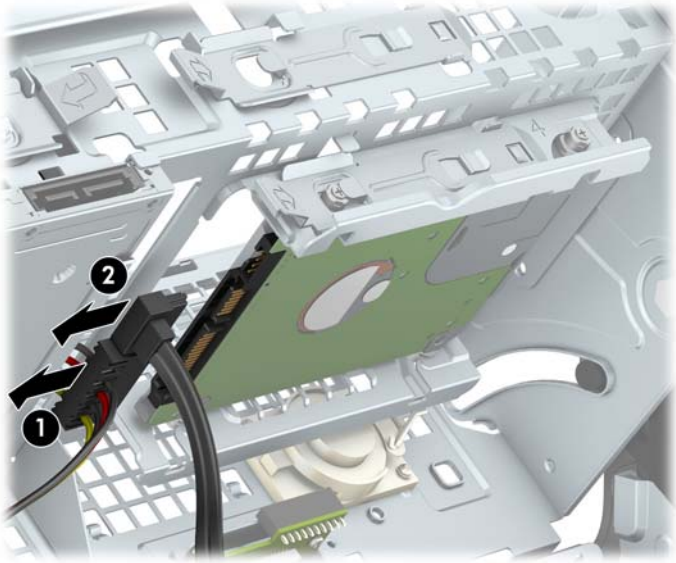

5. Pull the release lever at the rear of the drive outward **(1)**. Then slide the drive back until it stops and pull it down and out of the drive bay **(2)**.

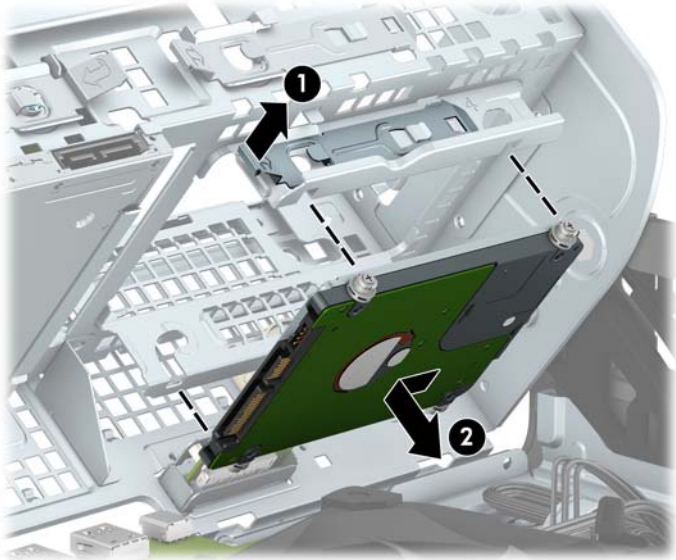

6. If you are installing a new drive, refer to Installing a 2.5-inch hard drive on page 43. If you are not installing a new drive, rotate the drive cage down and replace the front bezel and access panel.

Installing a 2.5-inch hard drive

1. Prepare the computer for disassembly (Preparation for disassembly on page 20).
2. Remove the access panel (Access panel on page 21).
3. Remove the front bezel (Front bezel on page 21).
4. Install four black-and-blue M3 mounting screws (two on each side of the drive).

NOTE: M3 metric mounting screws can be purchased from HP.

When replacing a drive, transfer the four mounting screws from the old drive to the new drive.

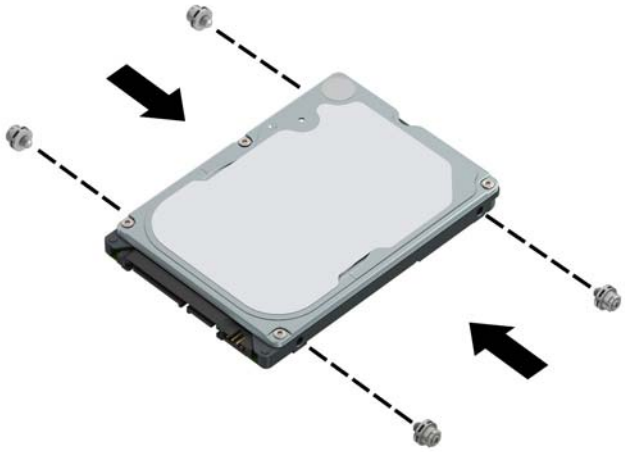

5. Rotate the hard drive cage to its upright position (Hard drive cage on page 41).
6. Align the mounting screws on the drive with the J-slots on the sides of the drive bay. Press the drive into the drive bay, and then slide the drive forward until it locks in place.

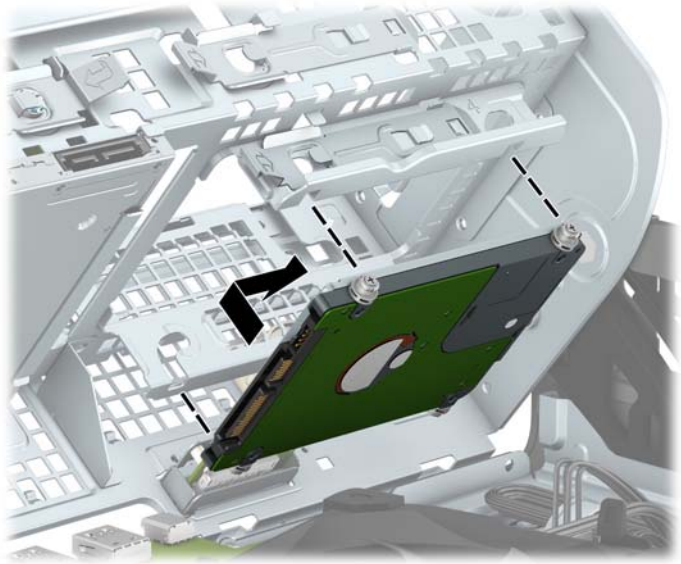

7. Connect the power cable **(1)** and data cable **(2)** to the rear of the hard drive.

NOTE: If the 2.5-inch hard drive is the primary drive, connect the other end of the data cable to the dark blue SATA connector on the system board labeled SATA0. If it is a secondary hard drive, connect the other end of the data cable to one of the light blue SATA connectors on the system board.

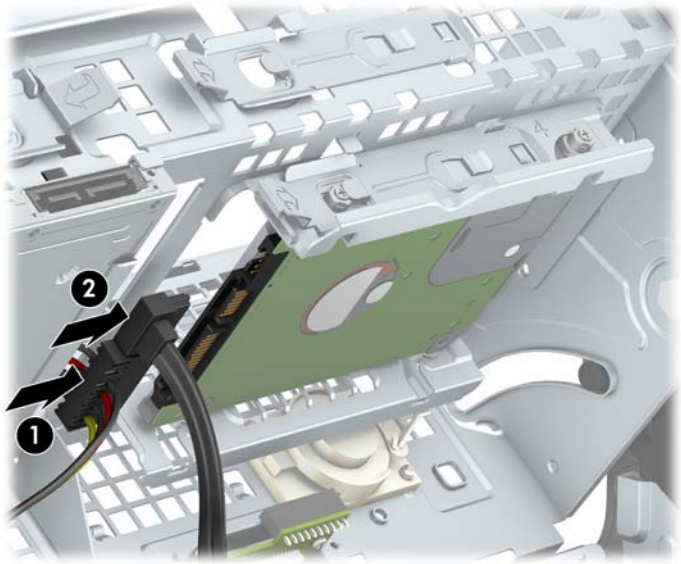

8. Rotate the drive cage back down to its normal position.

IMPORTANT: Be careful not to pinch any cables or wires when rotating the drive cage down.

9. Reassemble the computer.

Removing and installing an M.2 SSD storage card

NOTE: The computer supports 2230 and 2280 M.2 SSD cards.

1. Prepare the computer for disassembly (Preparation for disassembly on page 20).
2. Remove the access panel (Access panel on page 21).
3. Remove the front bezel (Front bezel on page 21).
4. Rotate the hard drive cage to its upright position (Hard drive cage on page 41).

5. To remove an M.2 SSD card, remove the screw that secures the card **(1)**, lift the end of the card up **(2)**, and then slide the card out of the system board connector (3).

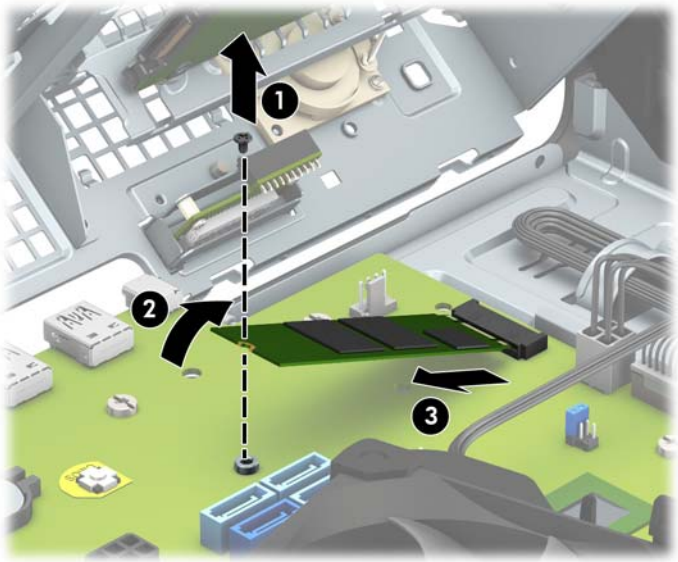

6. To install an M.2 SSD card, slide the pins on the card into the system board connector while holding the card at approximately a 30° angle **(1)**. Press the other end of the card down **(2)**, and then secure the card with the screw **(3)**.

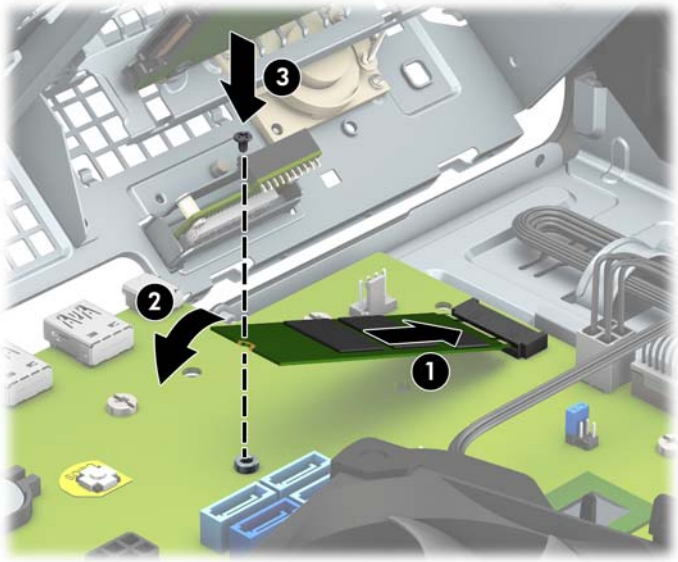

7. Rotate the drive cage back down to its normal position.

IMPORTANT: Be careful not to pinch any cables or wires when rotating the drive cage down.

8. Reassemble the computer.

WLAN module

The WLAN module installs into a connector on the system board.

For a list of available WLAN modules, see Boards, cards, and ports on page 9.

To remove the WLAN module:

1. Prepare the computer for disassembly (Preparation for disassembly on page 20).
2. Remove the access panel (Access panel on page 21).
3. Rotate the hard drive cage to its upright position (Hard drive cage on page 41).
4. Disconnect the WLAN antenna cables **(1)** from the terminals on the WLAN module.

NOTE: The WLAN antenna cable labeled “1” connects to the WLAN module “Main” terminal labeled “1”. The WLAN antenna cable labeled “2” connects to the WLAN module “Aux” terminal labeled “2”.

5. Remove the Phillips PM2.0×3.0 screw **(2)** that secures the WLAN module to the computer. (The edge of the module opposite the slot rises away from the computer.)
6. Remove the WLAN module **(3)** by pulling the module away from the slot at an angle.

NOTE: WLAN modules are designed with a notch to prevent incorrect insertion.

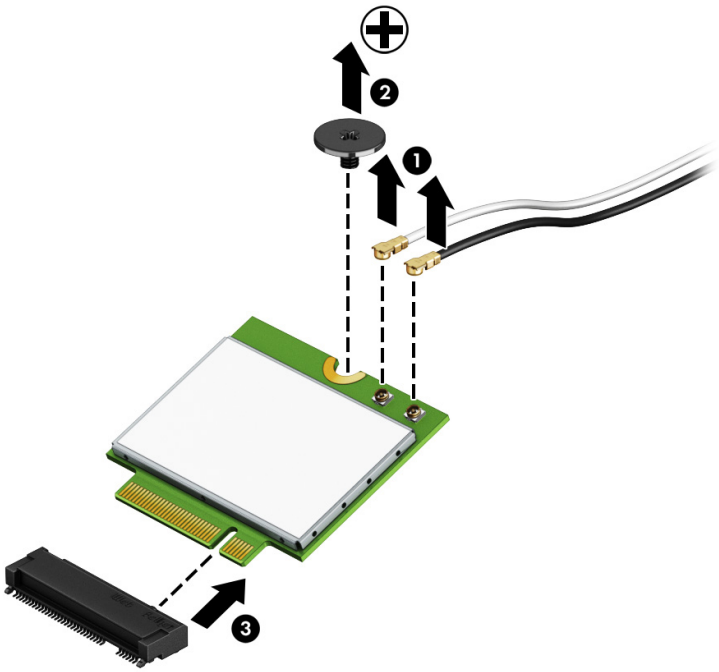

Reverse this procedure to install the WLAN module.

Air duct

The air duct sits over the fan sink.

1. Prepare the computer for disassembly (Preparation for disassembly on page 20).
2. Remove the access panel (Access panel on page 21).
3. Remove the power supply cable from the clips in the air duct.

4. Pull the tabs on the duct away from each other **(1)**, and then lift the duct up to gain access to the cable routing clip at the bottom of the duct **(2)**.

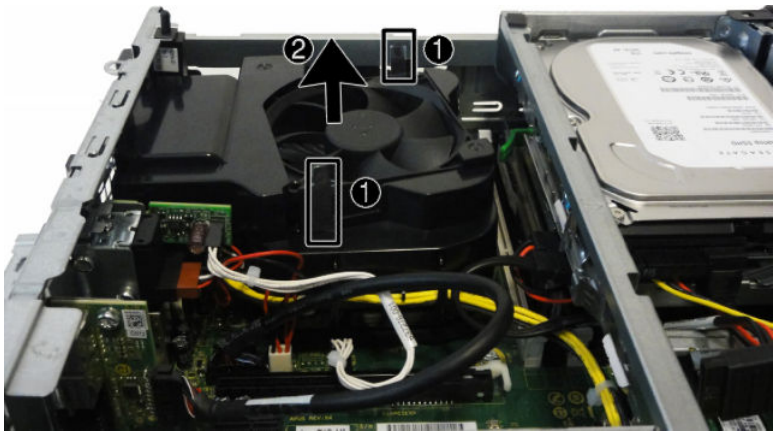

5. Remove the power supply cable and hood sensor cable from the clip near the bottom of the duct, and then remove the duct from the computer.

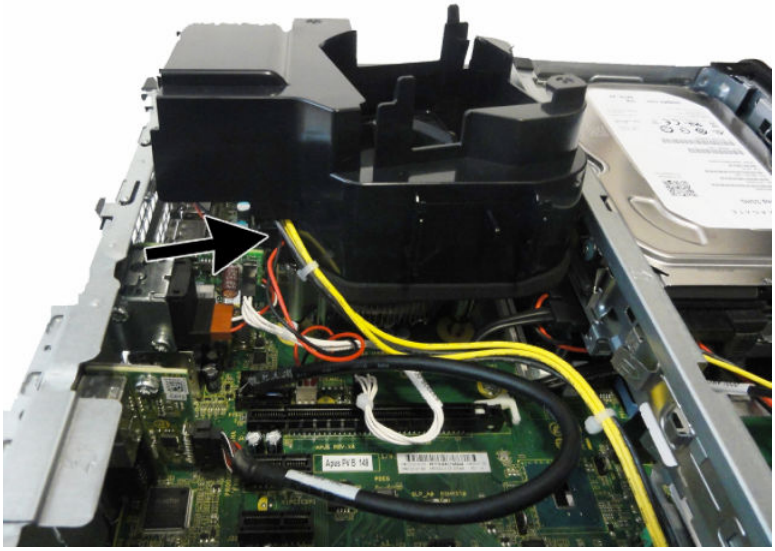

To install the aid duct, reverse the removal procedure.

Power supply

For a list of available power supplies, see Computer major components on page 5.

WARNING! To reduce potential safety issues, only the power supply provided with the computer, a replacement power supply provided by HP, or a power supply purchased as an accessory from HP should be used with the computer.

WARNING! Voltage is always present on the system board when the computer is plugged into an active AC outlet. To avoid possible personal injury and damage to the equipment the power cord should be disconnected from the computer and/or the AC outlet before opening the computer.

1. Prepare the computer for disassembly (Preparation for disassembly on page 20).
2. Remove the access panel (Access panel on page 21).
3. Remove the air duct (Air duct on page 47).
4. Rotate the hard drive cage to its upright position (Hard drive cage on page 41).
5. From the outside, rear of the chassis, remove the three Torx T15 that secure the power supply to the back of the chassis.

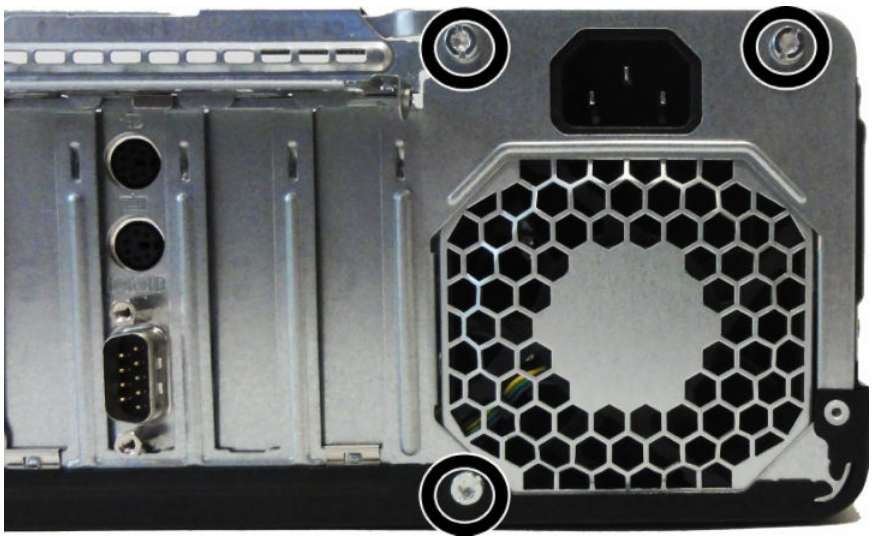

6. From the inside of the chassis, disconnect all power cables from the system board as follows:
   - PWRCMD
   - PWR
   - PWRCPU

7. Push the release lever at the front of the power supply **(1)**, slide the power supply forward, and then remove it from the chassis **(2)**.

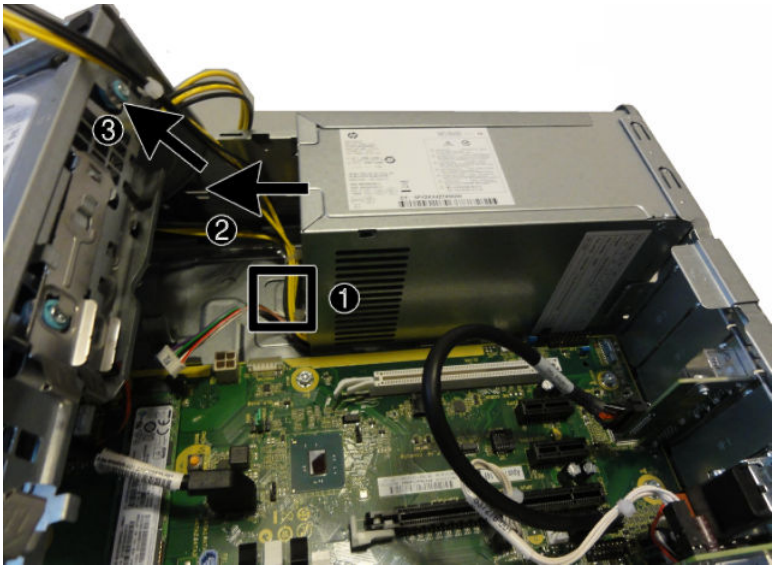

To install the power supply, reverse the removal procedure.

⚠ **CAUTION:** When installing the power supply cables, make sure they are properly positioned so they are not pinched by the drive cage.

Fan sink

⚠ **CAUTION:** The bond between the fan sink and the processor may be very tight.

If the computer will power on, before removing the fan sink, turn on the computer until it warms the fan sink. Warming the heat sink lessens the bond between the fan sink and the processor, thereby making separating them easier.

Make sure not to pull the processor out of the socket when you lift the fan sink, especially if you cannot warm the fan sink prior to removal. Inadvertently removing the processor can damage the pins.

The fan sink is secured atop the processor with four captive Torx screws.

1. Prepare the computer for disassembly (Preparation for disassembly on page 20).
2. Remove the access panel (Access panel on page 21).
3. Remove the air duct (Air duct on page 47).
4. Disconnect the fan cable from the system board connector labeled CPUFAN **(1)**, and then loosen the four captive screws **(2)** that secure the fan sink to the system board tray.

⚠ **CAUTION:** Fan sink retaining screws should be removed in diagonally opposite pairs (as in an X) to even the downward forces on the processor. This is especially important as the pins on the socket are very fragile and any damage to them may require replacing the system board.

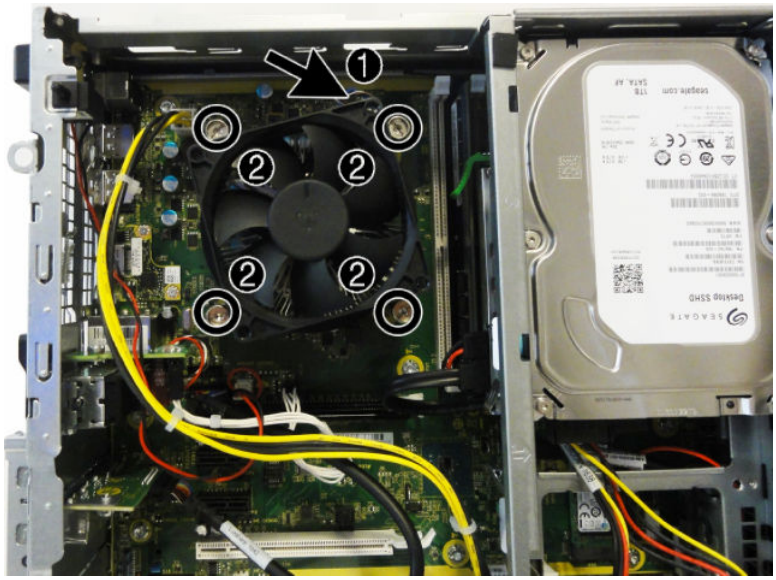

5. Lift the fan sink from atop the processor and set it on its side to keep from contaminating the work area with thermal grease.

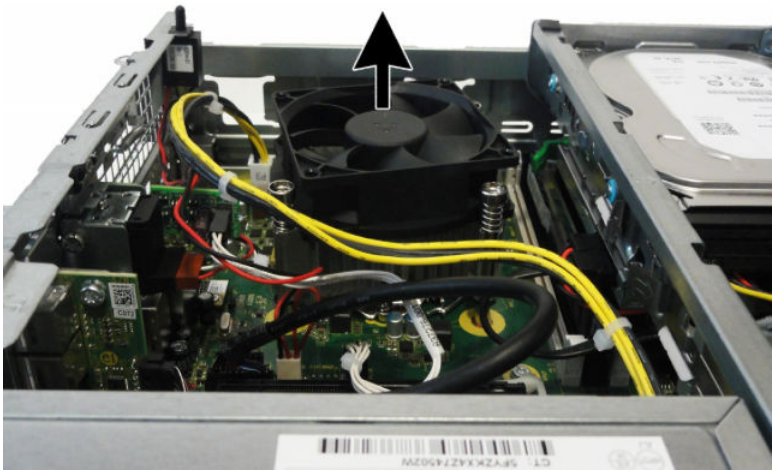

When reinstalling the fan sink, make sure that its bottom has been cleaned with an alcohol wipe and fresh thermal grease has been applied to the top of the processor.

⚠ **CAUTION:** Fan sink retaining screws should be tightened in diagonally opposite pairs (as in an X) to evenly seat the fan sink on the processor to avoid damage that could require replacing the system board.

Failure to install the baffle may cause the computer to overheat.

Processor

For a list of available processors, see Computer major components on page 5.

1. Prepare the computer for disassembly (Preparation for disassembly on page 20).
2. Remove the access panel (Access panel on page 21).
3. Remove the air duct (Air duct on page 47).
4. Remove the fan sink (Fan sink on page 51).
5. Rotate the locking lever to its full open position **(1)**.
6. Raise and rotate the microprocessor retainer to its fully open position **(2)**.
7. Lift the processor **(3)** straight up and remove it.

CAUTION: Do NOT handle the pins in the processor socket. These pins are very fragile and handling them could cause irreparable damage. Once pins are damaged it may be necessary to replace the system board.

The heat sink must be installed within 24 hours of installing the processor to prevent damage to the processor's solder connections.

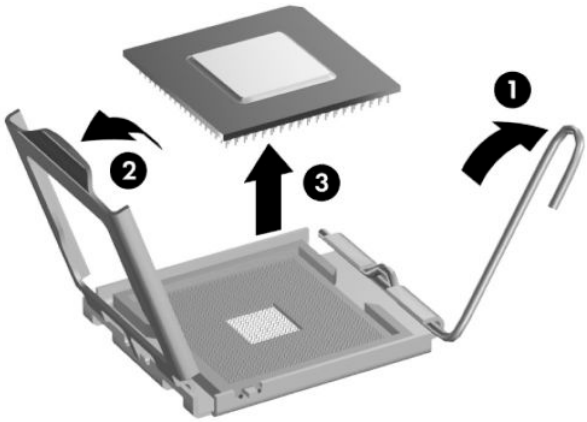

NOTE: After installing a new processor onto the system board, always update the system ROM to ensure that the latest version of the BIOS is being used on the computer. The latest system BIOS can be found on the Web at: http://www8.hp.com/us/en/support-drivers.html.

Antennas

The antennas route from the WLAN module to the front and the rear of the computer.

To replace the antennas:

1. Prepare the computer for disassembly (Preparation for disassembly on page 20).
2. Remove the access panel (Access panel on page 21).
3. Remove the front bezel (Front bezel on page 21).
4. Rotate the hard drive cage to its upright position (Hard drive cage on page 41).
5. Remove the air duct (Air duct on page 47).
6. Remove the fan sink (Fan sink on page 51).
7. Disconnect the internal antennas from the WLAN module (WLAN module on page 46).
8. From the front of the computer, remove the Torx screw that secures the antenna to the front of the computer **(1)**.
9. Remove the antenna wire from the clips that secure it to the computer **(2)**, and then pull the antenna through the hole **(3)** and away from the computer.

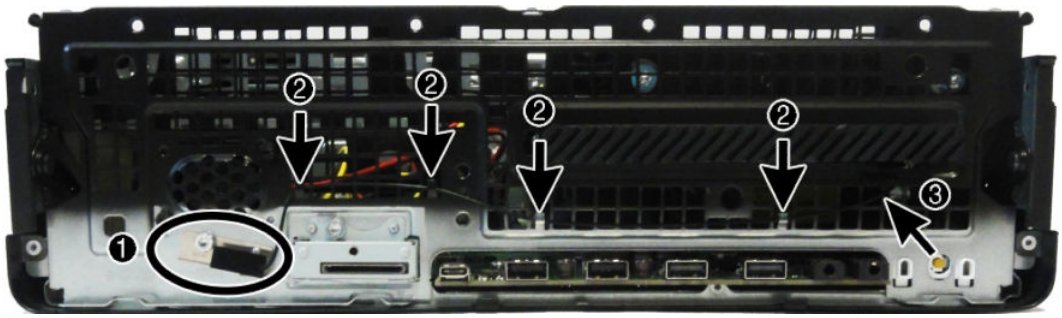

10. From inside the computer, remove the antenna wire from its path next to the system board.

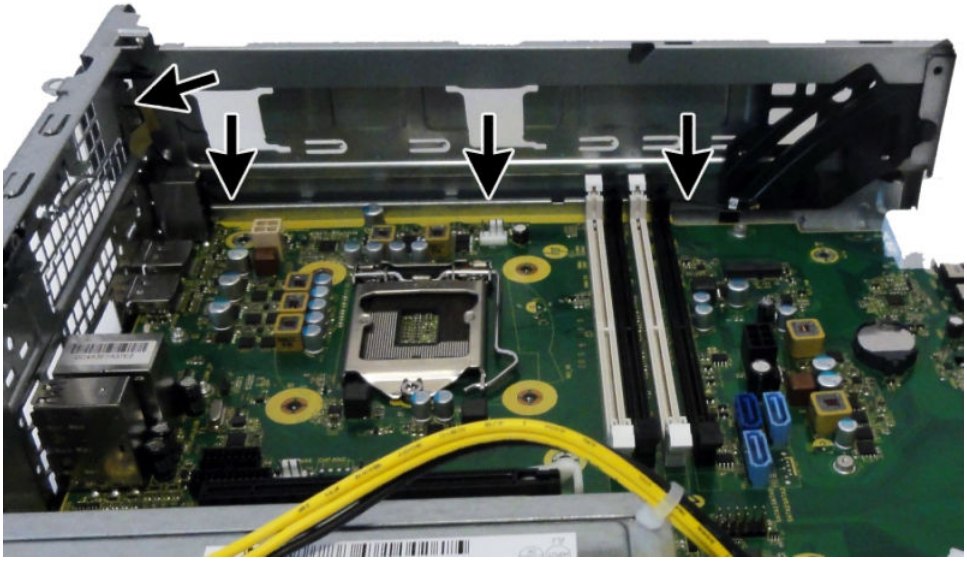

11. From the inside, rear of the computer, press the tab that secures the antenna cover to the computer.

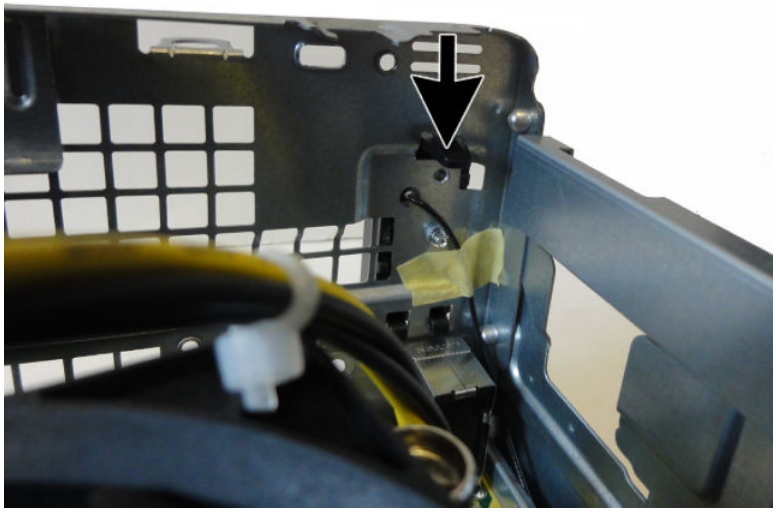

12. From the outside, rear of the computer, rotate the cover downward and off the computer.

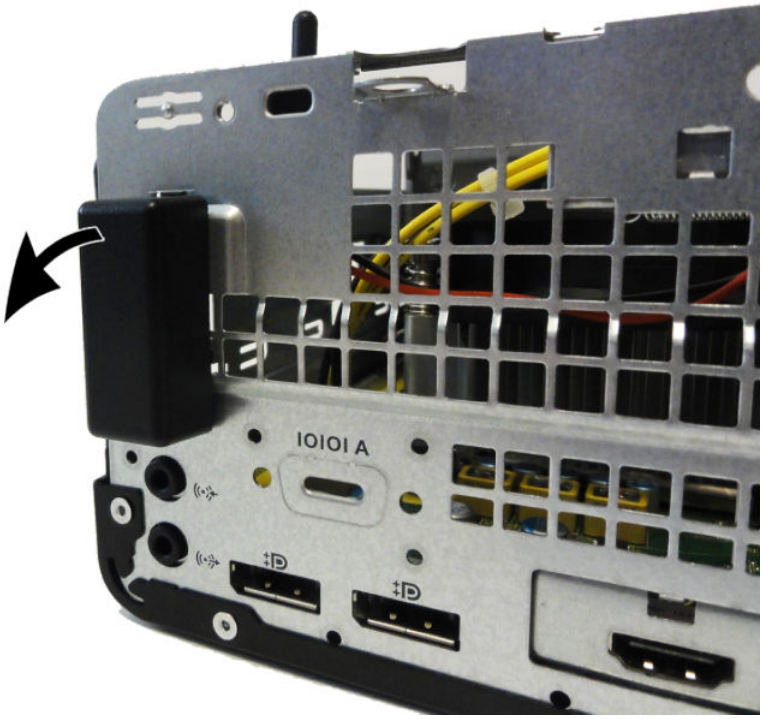

13. From the rear of the computer, remove the Torx T15 screw that secures the antenna to the computer. Pull the antenna cable out through the hole in the chassis.

Reverse the removal procedure to install the WLAN antennas and transceivers.

Option port board

For a list of available option port boards, see Boards, cards, and ports on page 9.

An option port board can be installed near the back of the system board that provides an additional connector on the rear I/O panel.

NOTE: The image in this section shows an HDMI port expansion board.

To remove the option port board:

1. Prepare the computer for disassembly (Preparation for disassembly on page 20).
2. Remove the access panel (Access panel on page 21).
3. Remove the air duct (Air duct on page 47).
4. Remove the two Phillips screws **(1)** that secure the board to the system board.
5. Lift to disengage the board from the system board connector, and then remove the board from the computer **(2)**.

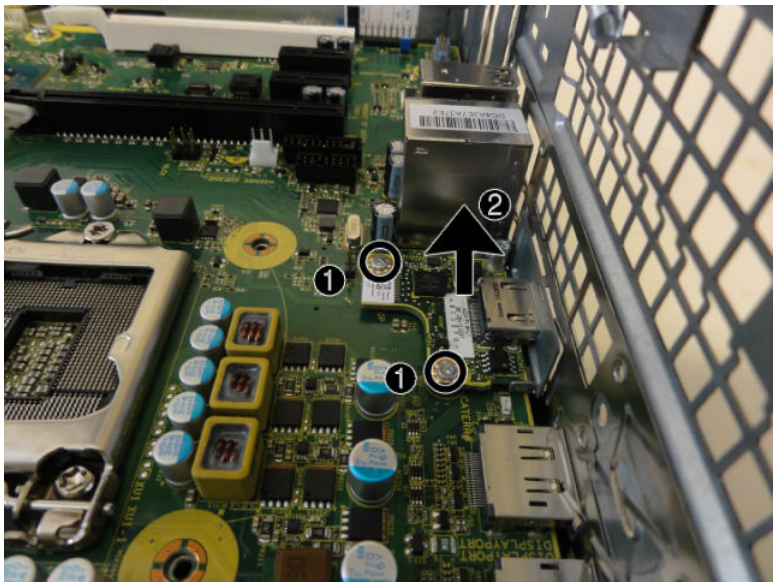

To install the option port board, reverse the removal procedures.

Hood lock

The hood lock is attached to the rear of the chassis.

1. Prepare the computer for disassembly (Preparation for disassembly on page 20).
2. Remove the access panel (Access panel on page 21).
3. On the rear of the computer, remove the security screw that secures the lock.

NOTE: The security screw requires a special security wrench to remove.

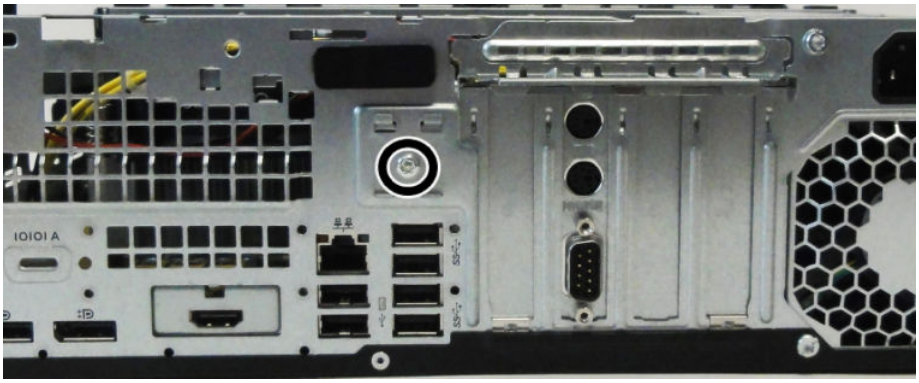

4. From the inside of the computer, disconnect the hood lock cable from the system board connector labeled HLCK **(1)**.
5. Lift the hood lock out of the computer **(2)**.

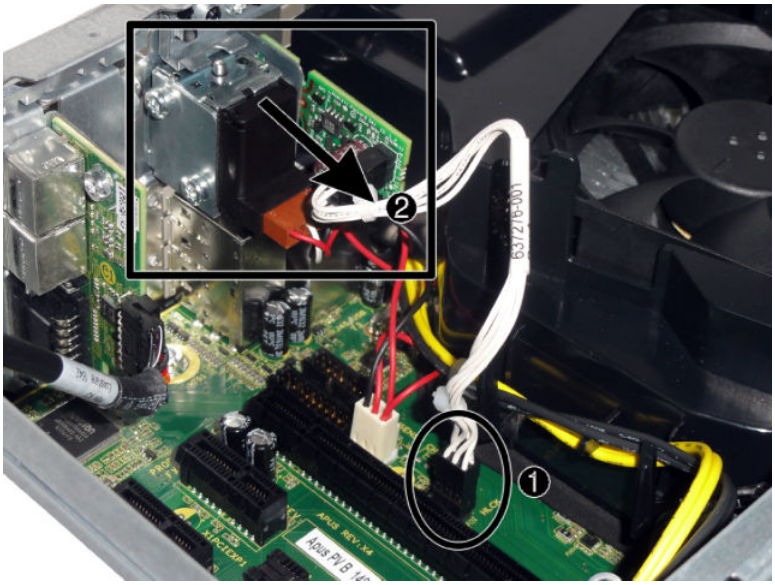

To install the hood lock, reverse the removal procedure.

When installing the hood lock, on the inside rear of the computer, insert the clips on the back of the lock into the slots on the computer rear panel, and then rotate the lock down into place.

Hood sensor

The hood sensor is attached to the rear of the chassis.

1. Prepare the computer for disassembly (Preparation for disassembly on page 20).
2. Remove the access panel (Access panel on page 21).
3. Remove the air duct (Air duct on page 47).
4. Disconnect the hood sensor cable from the system board connector labeled HSENSE **(1)**.
5. Slide the hood sensor out of the slot on the rear of the chassis **(2)**. A tool such as a screwdriver may be required to disengage the hood sensor from the slot.

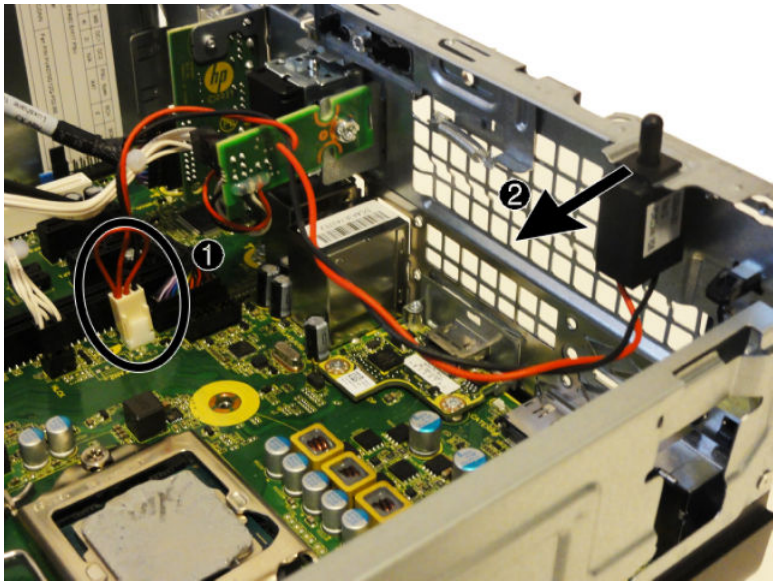

To install the hood sensor, reverse the removal procedure.

Card reader

The card reader is attached to the front of the rotating drive cage.

1. Prepare the computer for disassembly (Preparation for disassembly on page 20).
2. Remove the access panel (Access panel on page 21).
3. Remove the front bezel (Front bezel on page 21).
4. Rotate the hard drive cage to its upright position (Hard drive cage on page 41).
5. From the inside of the chassis, disconnect the card reader cable from the white system board labeled SD RDR.

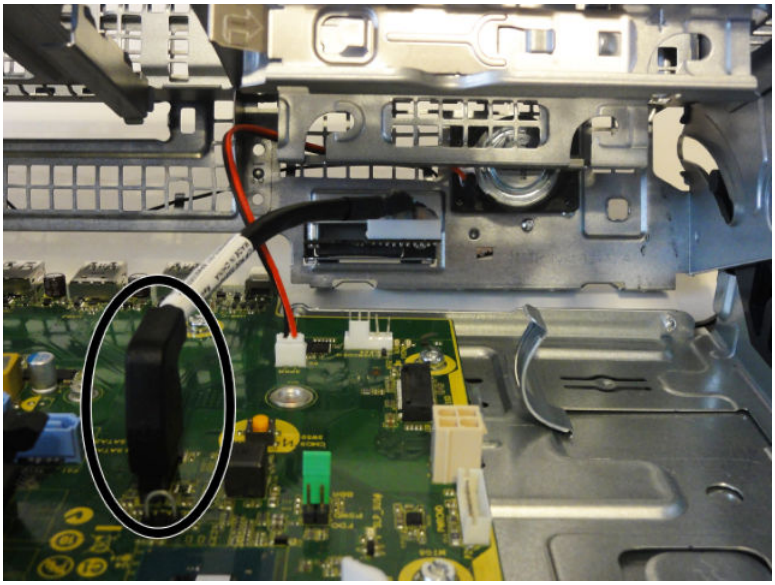

6. Rotate the hard drive cage down to its normal position (Hard drive cage on page 41).

7. From the outside, front of the chassis, remove the Torx T15 screw **(1)** that secures the card reader, and then slide the card reader out the front of the chassis **(2)**.

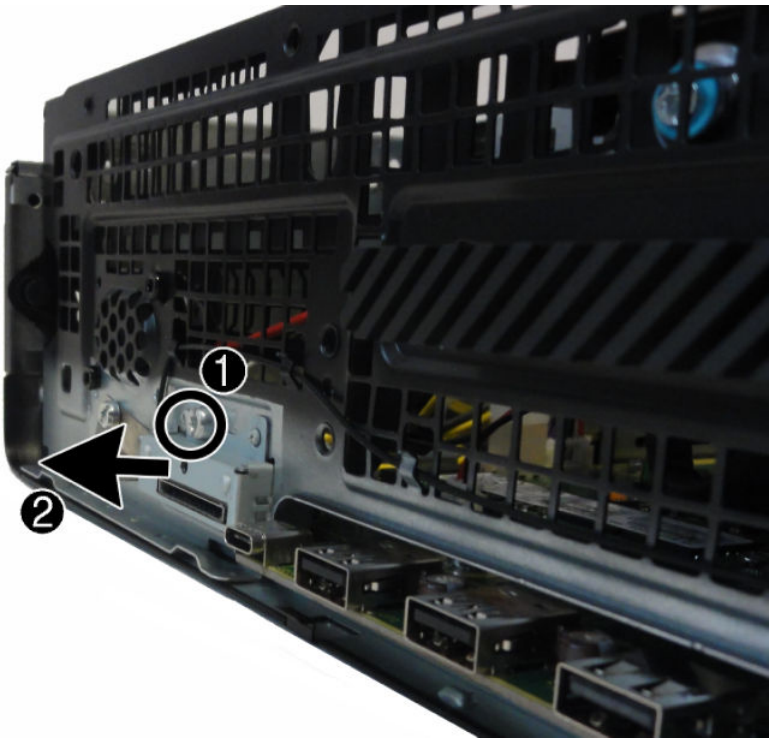

To install the card reader, reverse the removal procedures.

Speaker

The speaker is attached to the front of the rotating drive cage.

1. Prepare the computer for disassembly (Preparation for disassembly on page 20).
2. Remove the access panel (Access panel on page 21).
3. Remove the front bezel (Front bezel on page 21).
4. Rotate the hard drive cage to its upright position (Hard drive cage on page 41).
5. From the outside, front of the chassis, remove the two Torx T15 screws that secure the speaker.

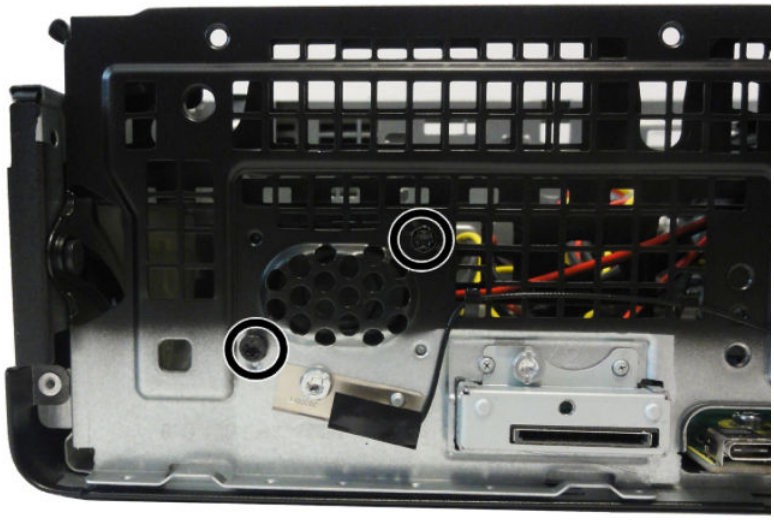

6. From the inside of the chassis, disconnect the speaker cable from the white system board labeled SPKR **(1)**, and then slide the speaker to the right and remove it from the chassis **(2)**.

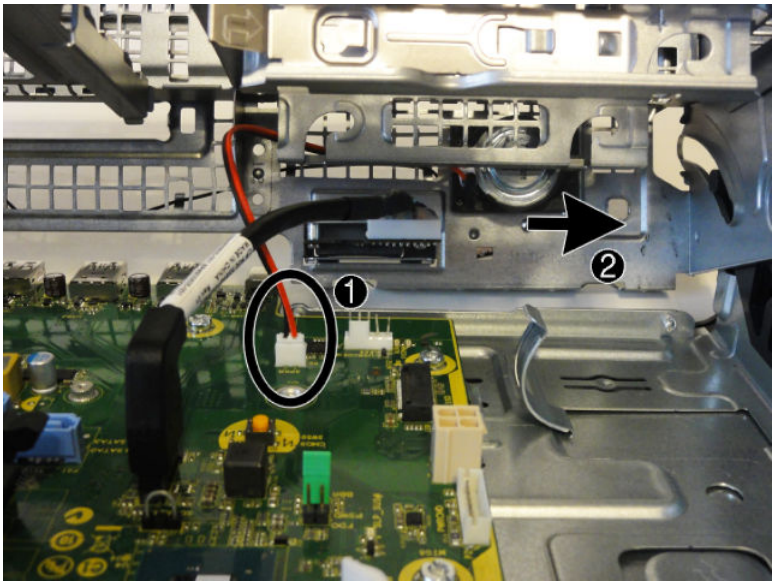

To install the speaker, reverse the removal procedures. The following images shows the installation location inside of the front of the computer.

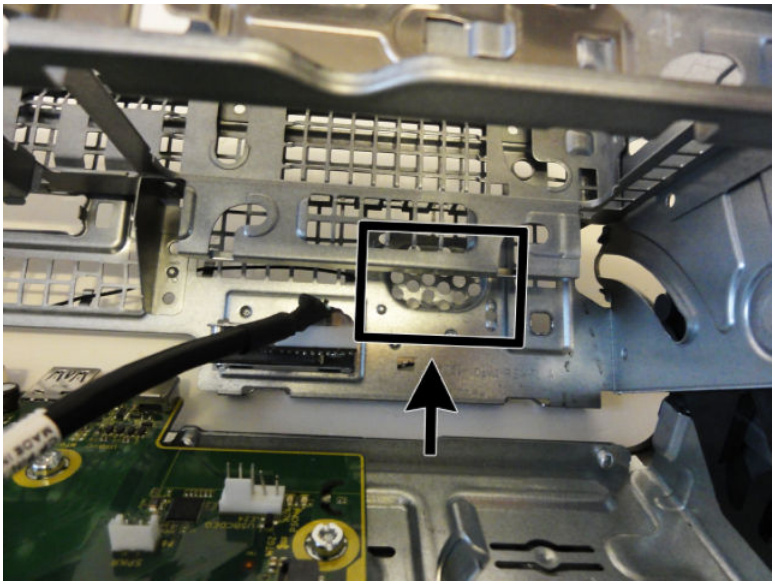

System board

NOTE: All system board spare part kits include replacement thermal material.

NOTE: System board appearance may vary.

1. Prepare the computer for disassembly (Preparation for disassembly on page 20).
2. Remove the access panel (Access panel on page 21).
3. Remove the air duct (Air duct on page 47).
4. Rotate the hard drive cage to its upright position (Hard drive cage on page 41).
5. When replacing the system board, make sure the following components are removed from the defective system board and installed on the replacement system board:
   - Memory modules (Memory on page 25)
   - Expansion cards (Expansion card on page 28)
   - Fan sink (Fan sink on page 51)
   - Processor (Processor on page 53)
   - WLAN module (WLAN module on page 46)
   - Solid-state drive (Removing and installing an M.2 SSD storage card on page 44)
   - Option port board (Option port board on page 57)
6. Disconnect all remaining cables connected to the system board, noting their location for reinstallation.
7. Remove the eight Torx T15 screws that secure the system board to the chassis **(1)**.
8. Slide the system board toward the front of the computer to disengage the I/O panel **(2)**, and then lift the rear of the system board upward and away from the under the drive cage **(3)**.

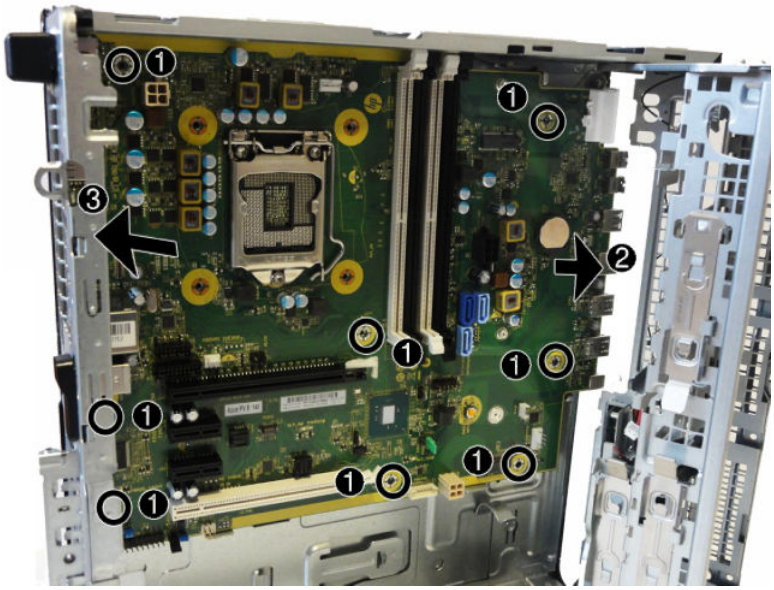

When reinstalling the system board, first insert the I/O panel back into the slots in the rear of the chassis, and then align the board with the chassis screw holes.

NOTE: When replacing the system board, you must change the chassis serial number in the BIOS.

System board callouts

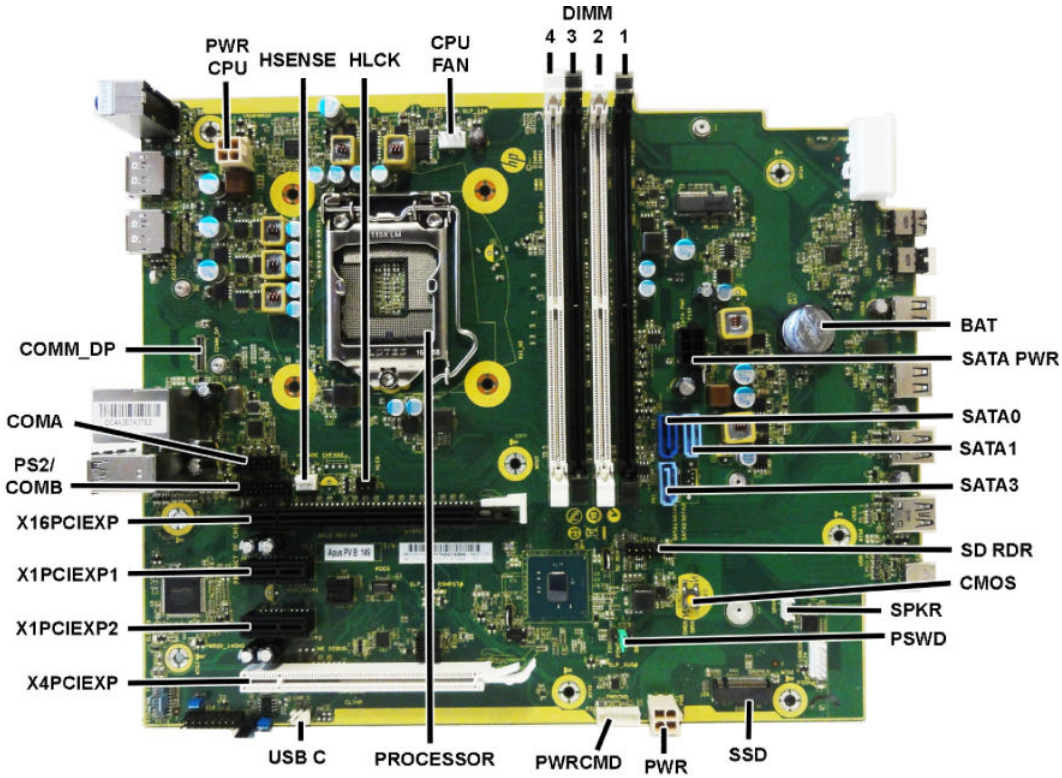

Sys Bd Label	Color	Component	Sys Bd Label	Color	Component
PWRCPU	White	4-pin processor power	SPKR	White	Speaker
HSENSE	White	Hood sensor	PSWD	Green	Clear system passwords
HLCK	Black	Hood lock	SSD	Black	M.2 solid-state drive
CPUFAN	White	Processor fan	PWR	White	6-pin main power
DIMM4	Black	Memory module	PWRCMD	White	Power supply
DIMM3	White	Memory module	PROCESSOR	Black	Processor
DIMM2	Black	Memory module	USB-C	Black	USB-C connector
DIMM1	White	Memory module	X4PCIEXP	Black	Expansion card
BAT	Black	RTC battery	X1PCIEXP2	Black	Expansion card
SATA PWR	Black	Drives	X1PCIEXP1	Black	Expansion card
SATA0	Dark blue	Hard drive	X16PCIEXP	White	Expansion card
SATA1	Light blue	Any SATA Device other than primary hard drive	PS2/COMB	Black	Optional second serial/PS2 combo port
SATA3	Light blue	Any SATA Device other than primary hard drive	COMA	Black	Optional second serial port
SD RDR	Black	Card reader	COMM_DP	Silver	Option port
CMOS	Yellow	Reset CMOS			

Changing from desktop to tower orientation

The Small Form Factor computer can be used in a tower orientation with an optional tower stand that can be purchased from HP.

NOTE: To stabilize the computer in a tower orientation, HP recommends the use of the optional tower stand.

1. Prepare the computer for disassembly (Preparation for disassembly on page 20).
2. Orient the computer so that its right side is facing down and place the computer in the optional stand.

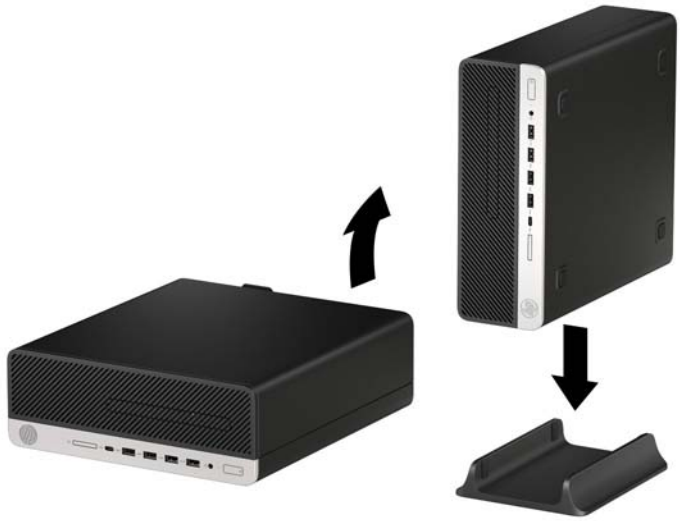

3. Reconnect the power cord and any external devices, and then turn on the computer.

NOTE: Ensure at least 10.2 centimeters (4 inches) of space on all sides of the computer remains clear and free of obstructions.

4. Lock any security devices that were disengaged when the access panel was removed.

5 Computer Setup (F10) Utility

Computer Setup (F10) Utilities

Use Computer Setup (F10) Utility to do the following:

- Change settings from the defaults or restore the settings to default values.
- View the system configuration, including settings for processor, graphics, memory, audio, storage, communications, and input devices.
- Modify the boot order of bootable devices such as hard drives, optical drives, or USB flash media devices.
- (Windows 7 only) Establish an Ownership Tag, the text of which is displayed each time the system is turned on or restarted.
- Enter the Asset Tag or property identification number assigned by the company to this computer.
- Enable the power-on password prompt during system restarts (warm boots) as well as during power-on.
- Establish an administrator password that controls access to the Computer Setup (F10) Utility and the settings described in this section.
- Establish minimum requirements for valid passwords, including length and required types of characters.
- Secure integrated I/O functionality, including the serial, USB, or audio, or embedded NIC, so that they cannot be used until they are unsecured.
- Enable or disable different types of boot sources.
- Configure features such as Secure Boot, power management, virtualization support, and language and keyboard type used in Setup and POST.
- Replicate the system setup by saving system configuration information on a USB device and restoring it on one or more computers.
- Enable or disable DriveLock security or securely erase a hard drive (when supported by drive).

Using Computer Setup (F10) Utilities

Computer Setup can be accessed only by turning the computer on or restarting the system. To access the Computer Setup Utilities menu, complete the following steps:

1. Turn on or restart the computer.
2. Repeatedly press F10 when the monitor light turns green to access the utility.

   You can also press Esc to a menu that allows you to access different options available at startup, including the Computer Setup utility.

NOTE: If you do not press F10 at the appropriate time, you must restart the computer and again repeatedly press F10 when the monitor light turns green to access the utility.

3. A choice of four headings appears in the Computer Setup Utilities menu: Main, Security, Advanced, and UEFI Drivers.

NOTE: Selecting UEFI Drivers restarts the computer into the 3rd party option ROM management application. You can access this application directly by pressing F3 during startup.

4. Use the arrow (left and right) keys to select the appropriate heading. Use the arrow (up and down) keys to select the option you want, then press Enter. To return to the Computer Setup Utilities menu, press Esc.

5. To apply and save changes, select **Main** > **Save Changes and Exit**.

   - If you have made changes that you do not want applied, select **Ignore Changes and Exit**.
   - To restore settings from the Advanced and Main menus to original values, select **Apply Factory Defaults and Exit**.
   - To restore settings from the Advanced and Main menus to those previously saved by **Save Custom Defaults**, select **Apply Custom Defaults and Exit**. If no custom defaults have been saved, then factory defaults are used.

NOTE: Settings in the **Security** menu are not modified by **Apply Defaults**. Those values are reset by **Restore Security Settings to Factory Defaults** at the bottom of the **Security** menu.

NOTE: Not all settings shown in the following sections are available for all models

CAUTION: Do NOT turn the computer power OFF while the BIOS is saving the Computer Setup (F10) changes because the settings could become corrupted. It is safe to turn off the computer only after exiting the F10 Setup screen.

Computer Setup–Main

NOTE: Support for specific Computer Setup options may vary depending on the hardware configuration.

Table 5-1 Computer Setup—Main

Option	Description
System Information	Lists all information in following list if **Advanced System Information** is selected. Lists smaller subset if **Basic System Information** is selected. • Product name • Installed memory size • **Processor** Processor type • Processor cache size (L1/L2/L3) • Processor speed • MicroCode revision • Processor stepping • DIMM size (for each installed module) • **Firmware** System BIOS version • ME Firmware version (Intel only) • Video BIOS version • Reference code version • Super I/O Firmware version • USB Type-C controller(s) firmware version • **Service** Born on date • Serial number • SKU number • UUID (Universally Unique Identifier) • Asset tracking number • Feature byte • Build ID • Product family • System board ID • System board CT number • **Communication** Integrated MAC Address
System Diagnostics	If the hard drive has the HP Advanced Diagnostics installed, the application will launch. If HP Advanced Diagnostics is not installed, then a basic version built into the BIOS will provide the capability to perform the following functions: • Provide detailed system information

Table 5-1 Computer Setup—Main (continued)

Option	Description
	• Hardware subsystem tests • Component tests • Show test logs • Language selection
Update System BIOS	Lets you update the system BIOS from www.hp.com or another network server, from a removable USB drive, or from a file located on the hard drive. Displays current BIOS version information. • 'Check HP.com for BIOS Updates' or 'Check the Network for BIOS Updates' The string that appears here depends on the setting in 'BIOS Update Preferences'. This selection checks for the latest BIOS release revision on the netowrk and lets you choose whether to download the BIOS image and update the computer. **NOTE:** If MS Windows BitLocker Drive Encryption (BDE) is enabled, you must suspend BDE temporarily before flashed. Be sure to obtain the BDE recovery password or recovery PIN before suspending BDE. You can enable BDE after updating the BIOS. • BIOS Rollback Policy Lets you select whether a minimum BIOS version can be allocated. If 'Restricted rollback to older BIOS' is selected, 'Minimum BIOS version' becomes active. Select to enter the minimum BIOS version that can be rolled back to. ▪ Unrestricted rollback to older BIOS ▪ Restricted rollback to older BIOS • Allow BIOS updates using a network • BIOS Update Preferences Allows the administrator to select the source of network updates (www.hp.com or another network server) and allows configuration of a periodic check for updates, including policies for: ▪ Check for updates and prompt the user to accept or reject the update at that time ▪ Check for updates and install all new versions ▪ Check for updates and install only new versions marked important • Network Configuration Settings
Change Date and Time	Allows you to set system time and date.
Set Machine Unique Data	Allows you to set/view data that is unique to each machine such as feature byte, build ID, serial number, SKU number, product family, and product name.
System IDs	Lets you set the following values: • Asset Tracking Number • Ownership Tag
Replicated Setup	**Backup current settings to USB device** Saves system configuration to a formatted USB flash media device. **Restore current settings from USB device** Restores system configuration from a USB flash media device.
Save Custom Defaults	Saves the current system configuration settings as the custom default set.

Table 5-1 Computer Setup—Main (continued)

Option	Description
Apply Custom Defaults and Exit	Applies the custom default settings to the computer after rebooting. Does not apply to options in the **Security** menu.
Apply Factory Defaults and Exit	Restores the factory system configuration settings to the computer after rebooting. Does not apply to options in the **Security** menu.
Ignore Changes and Exit	Exits Computer Setup without applying or saving any changes.
Save Changes and Exit	Saves changes to current system configuration, exits Computer Setup, and reboots.
Suppress POST Errors	Select to suppress most system messages during POST (Power-On Self Test).

Computer Setup—Security

NOTE: Support for specific Computer Setup options may vary depending on the hardware configuration.

Table 5-2 Computer Setup—Security

Option	Description
Set up BIOS Administrator Password	Lets you set and enable a BIOS administrator password, which controls access to the following features: • Setup Menu (F10) • 3rd Party Option ROM Management (F3) • Update system ROM • WMI commands that change system settings • BIOS Configuration Utility (BCU) • Alternative power-on password **NOTE:** Creating a BIOS user disables the Fast Boot option. **NOTE:** If the password is set, it is required to change Computer Setup options, update the BIOS, and make changes to certain plug and play settings under Windows.
Change BIOS Administrator Password (This selection is active only if a BIOS administrator password is set.)	Lets you change the BIOS administrator password. You must know the current password to be able to change it.
Password Policies	Let you set the guidelines for a valid password. Options include: • Password minimum length • Requires at least one symbol • Requires at least one number • Requires at least one upper case character • Requires at least one lower case character • Allow spaces **Clear Password Jumper** Select 'Honor' to allow or 'Ignore' to not allow the absence of the password jumper to clear the passwords at boot up. Default is 'Honor'.

Table 5-2 Computer Setup—Security (continued)

Option	Description
Security Configuration	**TPM Embedded Security** • **TPM Specification Version** Displays the current TPM version. • **TPM Device** Lets you set the Trusted Platform Module as available or hidden. • **TPM State** Select to enable the TPM. • **ClearTPM** Select to reset the TPM to an unowned state. After the TPM is cleared, it is also turned off. To temporarily suspend TPM operations, turn the TPM off instead of clearing it. **CAUTION:** Clearing the TPM resets it to factory defaults and turns it off. You will lose all created keys and data protected by those keys.
Utilities	**Hard Drive Utilities** • **Save/Restore MBR of System Hard Drive** **NOTE:** Windows 10 systems are generally not formatted to include an MBR. Instead they use GUID Partition Table (GPT) format, which better supports large hard drives. Enabling this feature will save the Master Boot Record (MBR) of the system hard drive. If the MBR gets changed, the user will be prompted to restore the MBR. Default is disabled. The MBR contains information needed to successfully boot from a disk and to access the data stored on the disk. Master Boot Record Security may prevent unintentional or malicious changes to the MBR, such as those caused by some viruses or by the incorrect use of certain disk utilities. It also allows you to recover the "last known good" MBR, should changes to the MBR be detected when the system is restarted. **NOTE:** Most operating systems control access to the MBR of the current bootable disk; the BIOS cannot prevent changes that may occur while the operating system is running. Restores the backup Master Boot Record to the current bootable disk. Default is disabled. Only appears if all of the following conditions are true: – MBR security is enabled – A backup copy of the MBR has been previously saved – The current bootable disk is the same disk from which the backup copy was saved **CAUTION:** Restoring a previously saved MBR after a disk utility or operating system has modified the MBR, may cause the data on the disk to become inaccessible. Only restore a previously saved MBR if you are confident that the current bootable disk's MBR has been corrupted or infected with a virus. • **Save/Restore GPT of System Hard Drive** Enabling this feature will save the GUID Partition Table (GPT) of the system hard drive. If the GPT is subsequently changed, the user is prompted to choose whether to restore GPT. • **DriveLock** Allows you to assign or modify a master or user password for hard drives. When this feature is enabled, the user is prompted to provide one of the DriveLock passwords during POST. If neither is successfully entered, the hard drive will remain inaccessible until one of the passwords is successfully provided during a subsequent cold-boot sequence.

Table 5-2 Computer Setup—Security (continued)

Option	Description
	NOTE: This selection will only appear when at least one drive that supports the DriveLock feature is attached to the system. **CAUTION:** Be aware that these settings take place immediately. A save is not necessary. **CAUTION:** Be sure to document the DriveLock password. Losing a DriveLock password will render a drive permanently locked. After you select a drive, the following options are available: **Set DriveLock Master Password**. Sets the drive's master password but does not enable DriveLock. **Enable DriveLock**. Sets the drive's user password and enables DriveLock. • **Secure Erase** Lets you select a hard drive to completely erase. Once a hard drive has been erased with a program that utilizes Secure Erase firmware commands, no file recovery program, partition recovery program, or other data recovery method will be able to extract data from the drive. • **Allow OPAL Hard Drive SID Authentication**
System Management Command	Allows authorized personnel to reset security settings during a service event. Default is enabled.
Restore Security Settings to Default	This action resets security devices, clears BIOS passwords (not including DriveLock), and restores settings in the **Security menu** to factory defaults.

Computer Setup—Advanced

NOTE: Support for specific Computer Setup options may vary depending on the hardware configuration.

Table 5-3 Computer Setup—Advanced (for advanced users)

Option	Heading
Display Language	Lets you select the language of the menus in F10 Setup and the keyboard layout.
Scheduled Power-On	This feature wakes the system up from a powered off state at a specified date and time.
Boot Options	Select the devices that the computer can boot from, as well as other options, including: • Startup Menu Delay(sec). Enabling this feature will add a user-specified delay to the POST process. One purpose for the delay is to provide additional time to activate hotkeys such as Esc for the Startup Menu or F10 for Computer Setup. • Fast Boot. Default is enabled. • CD-ROM Boot. Default is enabled. • USB Storage Boot. Default is enabled. • Network (PXE) Boot. Default is enabled. • After Power Loss. Default is Power Off. ■ Power off—causes the computer to remain powered off when power is restored. ■ Power on—causes the computer to power on automatically as soon as power is restored. ■ Previous state—causes the computer to power on automatically as soon as power is restored, if it was on when power was lost.

Table 5-3 Computer Setup—Advanced (for advanced users) (continued)

Option	Heading
	NOTE: If the system is configured to 'Power On from Keyboard Ports' (see Power Management Options), then this setting is forced to 'Power On'. • Audio Alerts During Boot. Default is enabled. When disabled, most audible beeps from errors, warnings, and password prompts during boot up are suppressed. • Prompt on Memory Size Change. Default is enabled. • Prompt on Fixed Storage Change. Default is disabled. • UEFI Boot Order. Default is enabled. Specify the order in which UEFI boot sources (such as a internal hard drive, USB hard drive, USB optical drive, or internal optical drive) are checked for a bootable operating system image. UEFI boot sources always have precedence over legacy boot sources.
Secure Boot Configuration	**Configure Legacy Support and Secure Boot** Lets you turn off all legacy support on the computer, including booting to DOS, running legacy graphics cards, booting to legacy devices, and so on. Lets you make sure an operating system is legitimate before booting to it, making Windows resistant to malicious modification from preboot to full OS booting, preventing firmware attacks. UEFI and Windows Secure Boot only allow code signed by pre-approved digital certificates to run during the firmware and OS boot process. • Legacy Support Enable and Secure Boot Disable • Legacy Support Disable and Secure Boot Enable • Legacy Support Disable and Secure Boot Disable Default is 'Legacy Support Disable and Secure Boot Disable'. **Secure Boot Key Management** Lets you manage the custom key settings. **Import Custom Secure Boot keys** Default is disabled. **Clear Secure Boot Keys** Lets you delete any previously loaded custom boot keys. Clearing keys will disable secure boot. Default is disabled. **Reset Secure Boot keys to factory defaults** Default is disabled. **Enable MS UEFI CA key** Disabling this setting alters the Secure Boot key list to further restrict the allowed software components. Set this option to 'disable' to support Device Guard.
System Options	**Turbo boost** Intel Turbo Boost Technology (TBT) automatically allows processor cores to run faster than the base operating frequency if it is operating below power, current, and temperature specification limits. Default is enabled. **Multi-processor** Use this option to disable multi-processor support under the operating system. Default is enabled. **Virtualization Technology (VTx)** (Intel only)

Table 5-3 Computer Setup—Advanced (for advanced users) (continued)

Option	Heading
	Controls the virtualization features of the processor. Changing this setting requires turning the computer off and then back on. Default is disabled. **Virtualization Technology for Directed I/O (VTd)** (Intel only) Controls virtualization DMA remapping features of the chipset. Changing this setting requires turning the computer off and then back on. Default is disabled. **PCI Express Slot x** (enable/disable) Lets you disable individual expansion slots. Default is enabled. **M.2 WLAN/BT** Lets you disable the wireless module slot. Default is enabled. **M.2 SSD** Lets you disable the M.2 solid-state drive slot. Default is enabled. **Allow PCIe/PCI SERR# Interrupt** (enable/disable) Allows PCI devices to report PCI/PCIe System Error signals, such as address parity errors, data parity errors, and critical errors other than parity. Default is enabled. **Power Button Override** (disable/4 sec/15 sec) Lets you disable or enable and select the number of seconds you have to hold down the power button for it to force the system to power off. Default is '4 sec'.
Built-In Device Options	**Embedded LAN Controller** Select to show the device in the operating system. Default is enabled. **Wake On LAN** Lets you either disable the Wake On LAN feature, or configure where the computer boots, including the network or hard drive. Default is Boot to Network. **Dust Filter** Select to enable the Dust Filter replacement reminder, which can be set for 15, 30, 60, 90, 120, or 180 days. The reminder will show during POST after the reminder timer has expired. **Video Memory Size** Use this option to manage graphics memory allocation. The value you choose is allocated permanently to graphics and is unavailable to the operating system. **Audio Device** Select to show the device in the operating system. Default is enabled. **Internal Speakers** (does not affect external speakers) Clear to disable the chassis speaker or speakers. This function is applicable to normal audio playback in the operating system and does not affect the error or warning beeps during POST. Default is enabled. **Increase Idle Fan Speed(%)** Sets idle fan speed percentage. This setting only changes the minimum fan speed. The fan is still automatically controlled.
Port Options	**Serial Port B** Lets you disable the port. Default is enabled. **I/O Address B** Lets you specify the address. Default is enabled.

Table 5-3 Computer Setup—Advanced (for advanced users) (continued)

Option	Heading
	Interrupt B Lets you specify the address. Default is enabled. Lets you disable the following ports (default is enabled): • SATA connectors • Front USB ports • Rear USB ports • USB Legacy Port Charging Enables USB charging port capability when the system is in hibernate or shutdown state. • Front USB Type-C Downstream Charging Enables USB charging port capability when the system is in hibernate or shutdown state. **Restrict USB Devices** Specify the following categories of USB devices to enable: • Allow all USB devices (default) • Allow only keyboard and mouse • Allow all but storage devices and hubs. When some devices are restricted, the system will disable USB ports that do not meet the allowed criteria. This feature is usually combined with similar policies within the operating system since USB devices can be moved to different ports. The ports disabled by the BIOS will remain disabled until the system is restarted. **USB Type-C Controller Firmware Update** Default is enabled.
Option ROM Launch Policy	These policies control whether Legacy Option ROMs or UEFI drivers are loaded. Default is 'All legacy' for Windows 7 and other non-Windows configurations. Default is 'All UEFI' for Windows 10 or later. **Configure Option ROM Launch Policy** • All legacy • All UEFI • All UEFI except video
Power Management Options	**Runtime Power Management** (enable/disable) Allows certain operating systems to reduce processor voltage and frequency when the current software load does not require the full capabilities of the processor. Default is enabled. **Extended Idle Power States** (enable/disable) Allows certain operating systems to decrease the processors power consumption when the processor is idle. Default is enabled. **S5 Maximum Power Savings** (enable/disable) Enabling this feature reduces the power of the system as much as possible in the S5 state. Power is removed from the wake up circuitry, the expansion slots, and any management features while in S5. Default is disabled. **SATA Power Management** (enable/disable) Enables or disables SATA bus and/or device power management. Default is enabled.

Table 5-3 Computer Setup—Advanced (for advanced users) (continued)

Option	Heading
	PCI Express Power Management (enable/disable) Enabling this option permits the PCI Express links to use Active Power State Management (ASPM) to enter lower power states while not in use. Default is enabled. **Unique Sleep State Blink Rates** (enable/disable) This feature is designed to provide a visual indication of what sleep state the system is in. Each sleep state has a unique blink pattern. Default is disabled. **NOTE:** A normal shutdown goes to the S4 state for Windows 10 or later. S0 (On) = Solid white LED. S3 (Stand By)= 3 blinks at 1Hz (50% duty cycle) followed by a pause of 2 seconds (white LED) — repeated cycles of 3 blinks and a pause. S4 (Hibernation)= 4 blinks at 1Hz (50% duty cycle) followed by a pause of 2 seconds (white LED) — repeated cycles of 4 blinks and a pause. S5 (Soft Off) = LED is off. **Power On from Keyboard Ports** (enable/disable) When enabled, this feature allows a key press to power on the system when it is off (S5 state). If using a USB keyboard, it must be plugged into one of the rear ports labeled with the keyboard icon. Default is disabled.
Remote Management Options	**Active Management (AMT)** (Intel only) (enable/disable). Default is enabled. Allows you to discover, repair, and protect networked computing devices. **USB Key Provisioning Support** (enable/disable) Default is disabled. **USB Redirection Support** (enable/disable). Default is enabled. USB redirection allows USB devices plugged into a client computer to be transparently redirected to the guest operating system. **Unconfigure AMT on next boot** (Do Not Apply/Apply). Default is 'Do Not Apply'. **SOL Terminal Emulation Mode** (ANSI / VT100). Default is ANSI. SOL terminal emulation mode is only activated during remote AMT redirection operations. The emulation options allow administrators to select which mode works best with their console. **Show Unconfigure ME Confirmation Prompt** (enable/disable). Default is enabled. **Verbose Boot Messages** (enable/disable). Default is enabled. Verbose boot shows additional logging information during the boot. mainly for debugging if something goes wrong during bootup. **Watchdog Timer** (enable/disable). Default is enabled. Allows you to set amount of time for a operating system and BIOS watchdog alert to be sent if the timers are not deactivated. BIOS watchdog is deactivated by BIOS and would indicate that a halt occurred during execution if the alert is sent to the management console. An operating system alert is deactivated by the operating system image and would indicate that a hang occurred during its initialization. • OS Watchdog Timer (min.) – (5/10/15/20/25). Default is 5 min. • BIOS Watchdog Timer (min.) – (5/10/15/20/25). Default is 5 min. **CIRA Timeout (min.)** (1/2/3/4/Never) CIRA is Customer Initiated Remote Assistance, an Intel service to help users employing Active Management Technology (AMT).

Computer Setup—UEFI Drivers

Lets you restart the computer into the 3rd Party Option ROM Management application. You can start this application directly by pressing F3 during startup.

Recovering the Configuration Settings

This method of recovery requires that you first perform the **Save to Removable Media** command with the Computer Setup (F10) Utility before **Restore** is needed. (See Computer Setup–Main on page 69 in the Computer Setup—File table.)

The **Save to Removable Media** option creates a file named HPSETUP.TXT on an inserted USB flash media device. This file can be edited to change the settings on Restore. An asterisk (*) marks the selected option for a setting.

NOTE: It is recommended that you save any modified computer configuration settings to a USB flash media device and save the device for possible future use.

To restore the configuration, insert the USB flash media device with the saved configuration and perform the **Restore from Removable Media** command with the Computer Setup (F10) Utility. (See Computer Setup–Main on page 69 in the Computer Setup—File table.)

6 Troubleshooting without diagnostics

This chapter provides information on how to identify and correct minor problems, such as USB devices, hard drive, optical drive, graphics, audio, memory, and software problems. If you encounter problems with the computer, refer to the tables in this chapter for probable causes and recommended solutions.

NOTE: For information on specific error messages that may appear on the screen during Power-On Self-Test (POST) at startup, refer to POST error messages and diagnostic front panel LEDs and audible codes on page 110.

Safety and comfort

WARNING! Misuse of the computer or failure to establish a safe and comfortable work environment may result in discomfort or serious injury. Refer to the *Safety & Comfort Guide* at http://www.hp.com/ergo for more information on choosing a workspace and creating a safe and comfortable work environment. For more information, refer to the *Safety & Regulatory Information* guide.

Before you call for technical support

If you are having problems with the computer, try the appropriate solutions below to try to isolate the exact problem before calling for technical support.

- Run the HP diagnostic tool.
- Run the hard drive self-test in Computer Setup. Refer to Computer Setup (F10) Utility on page 67 for more information.
- Check the Power LED on the front of the computer to see if it is flashing red. The flashing lights are error codes that will help you diagnose the problem. Refer to POST error messages and diagnostic front panel LEDs and audible codes on page 110 for more information.
- If the screen is blank, plug the monitor into a different video port on the computer if one is available. Or, replace the monitor with a monitor that you know is functioning properly.
- If you are working on a network, plug another computer with a different cable into the network connection. There may be a problem with the network plug or cable.
- If you recently added new hardware, remove the hardware and see if the computer functions properly.
- If you recently installed new software, uninstall the software and see if the computer functions properly.
- Boot the computer to the Safe Mode to see if it will boot without all of the drivers loaded. When booting the operating system, use “Last Known Configuration.”
- Refer to the comprehensive online technical support at http://www.hp.com/support.
- Refer to Helpful hints on page 80 in this guide.

To assist you in resolving problems online, HP Instant Support Professional Edition provides you with self-solve diagnostics. If you need to contact HP support, use HP Instant Support Professional Edition's online chat feature. Access HP Instant Support Professional Edition at: http://www.hp.com/go/ispe.

Access the Business Support Center (BSC) at http://www.hp.com/go/bizsupport for the latest online support information, software and drivers, proactive notification, and worldwide community of peers and HP experts.

If it becomes necessary to call for technical assistance, be prepared to do the following to ensure that your service call is handled properly:

- Be in front of your computer when you call.
- Write down the computer serial number, product ID number, and monitor serial number before calling.
- Spend time troubleshooting the problem with the service technician.
- Remove any hardware that was recently added to your system.
- Remove any software that was recently installed.
- Restore the system from the Recovery Disc Set that you created or restore the system to its original factory condition in System Software Requirement Disks (SSRD).

CAUTION: Restoring the system will erase all data on the hard drive. Be sure to back up all data files before running the restore process.

NOTE: For sales information and warranty upgrades (Care Packs), call your local authorized service provider or dealer.

Helpful hints

If you encounter problems with the computer, monitor, or software, see the following list of general suggestions before taking further action:

- Check that the computer and monitor are plugged into a working electrical outlet.
- Check that the voltage select switch (some models) is set to the appropriate voltage for your region (115V or 230V).
- Check that the computer is turned on and the white power light is on.
- Check that the monitor is turned on and the green monitor light is on.
- Check the Power LED on the front of the computer to see if it is flashing red. The flashing lights are error codes that will help you diagnose the problem. Refer to POST error messages and diagnostic front panel LEDs and audible codes on page 110 for more information.
- Turn up the brightness and contrast controls of the monitor if the monitor is dim.
- Press and hold any key. If the system beeps, then the keyboard should be operating correctly.
- Check all cable connections for loose connections or incorrect connections.
- Wake the computer by pressing any key on the keyboard or pressing the power button. If the system remains in suspend mode, shut down the computer by pressing and holding the power button for at least four seconds then press the power button again to restart the computer. If the system will not shut down, unplug the power cord, wait a few seconds, then plug it in again. The computer will restart if it is set to power on automatically as soon as power is restored in Computer Setup. If it does not restart, press the power button to start the computer.
- Reconfigure the computer after installing a non-plug and play expansion board or other option. See Solving Hardware Installation Problems on page 98 for instructions.
- Be sure that all the needed device drivers have been installed. For example, if you are using a printer, you need a driver for that model printer.
- Remove all bootable media (CD/DVD or USB device) from the system before turning it on.

- If you have installed an operating system other than the factory-installed operating system, check to be sure that it is supported on the system.
- If the system has multiple video sources (embedded, PCI, or PCI-Express adapters) installed (embedded video on some models only) and a single monitor, the monitor must be plugged into the monitor connector on the source selected as the primary VGA adapter. During boot, the other monitor connectors are disabled and if the monitor is connected into these ports, the monitor will not function. You can select which source will be the default VGA source in Computer Setup.

⚠ **CAUTION:** When the computer is plugged into an AC power source, there is always voltage applied to the system board. You must disconnect the power cord from the power source before opening the computer to prevent system board or component damage.

Solving general problems

You may be able to easily resolve the general problems described in this section. If a problem persists and you are unable to resolve it yourself or if you feel uncomfortable about performing the operation, contact an authorized dealer or reseller.

⚠ **WARNING!** When the computer is plugged into an AC power source, voltage is always applied to the system board. To reduce the risk of personal injury from electrical shock and/or hot surfaces, be sure to disconnect the power cord from the wall outlet and allow the internal system components to cool before touching.

Cannot access the Computer Setup (F10) Utility when booting the computer.

Cause	Solution
The Computer Setup (F10) Utility is set to “fast boot” causing the F10 access screen to display too briefly when booting the computer.	Before turning on the computer, press and hold F10. Turn on the computer and continue to hold F10 until the Computer Setup (F10) Utility is displayed. - or – Follow the Windows instructions for rebooting the computer into the Computer Setup (F10) Utility.

Computer appears locked up and will not turn off when the power button is pressed.

Cause	Solution
Software control of the power switch is not functional.	1. Press and hold the power button for at least four seconds until the computer turns off. 2. Disconnect the power cord from the electrical outlet.

Computer will not respond to keyboard or mouse.

Cause	Solution
Computer is in Sleep state.	To resume from Sleep state, press the power button. **CAUTION:** When attempting to resume from Sleep state, do not hold down the power button for more than four seconds. Otherwise, the computer will shut down and you will lose any unsaved data.
System has locked up.	Restart computer.

Computer date and time display is incorrect.

Cause	Solution
RTC (real-time clock) battery may need to be replaced. **NOTE:** Connecting the computer to a live AC outlet prolongs the life of the RTC battery.	Reset the date and time under **Control Panel** (Computer Setup can also be used to update the RTC date and time). If the problem persists, replace the RTC battery. See the Removal and Replacement section for instructions on installing a new battery, or contact an authorized dealer or reseller for RTC battery replacement. To access Control Panel in Windows 7, select **Start**, and then select **Control Panel**. To access Control Panel in Windows 10, type `control panel` in the taskbar search box, and then select Control Panel.

There is no sound or sound volume is too low.

Cause	Solution
System volume may be set low or muted.	1. Check the Computer Setup settings to make sure the internal system speaker is not muted (this setting does not affect the external speakers). 2. Make sure the external speakers are properly connected and powered on and that the speakers' volume control is set correctly. 3. Use the system volume control available in the operating system to make sure the speakers are not muted or to increase the volume.

Cannot remove computer cover or access panel.

Cause	Solution
Smart Cover Lock, featured on some computers, is locked.	Unlock the Smart Cover Lock using Computer Setup. In case of forgotten password, power loss, or computer malfunction, you must manually disable the Smart Cover lock . A key to unlock the Smart Cover Lock is not available from HP. Keys are typically available from a hardware store.

Poor performance.

Cause	Solution
Processor is too hot.	1. Make sure airflow to the computer is not blocked. Leave a 10.2-cm (4-inch) clearance on all vented sides of the computer and above the monitor to permit the required airflow. 2. Make sure fans are connected and working properly (some fans only operate when needed). 3. Make sure the processor heat sink is installed properly.
Hard drive is full.	Transfer data from the hard drive to create more space on the hard drive.

Poor performance.

Cause	Solution
Low on memory.	Add more memory.
Hard drive fragmented.	Defragment hard drive.
Program previously accessed did not release reserved memory back to the system.	Restart the computer.
Virus resident on the hard drive.	Run virus protection program.
Too many applications running.	1. Close unnecessary applications to free up memory. 2. Add more memory. 3. Some applications run in the background and can be closed by right-clicking on their corresponding icons in the task tray. To prevent these applications from launching at startup: In Windows 7: a. Go to **Start** > **All Programs** > **Accessories** > **Run** b. Type `msconfig`, and then press Enter. c. On the **Startup** tab of the System Configuration Utility, clear applications that you do not want to launch automatically, and the click **OK**. In Windows 10: a. Type `msconfig` in the taskbar search box, and then select **msconfig**. b. On the **Startup** tab of the System Configuration Utility, click **Open Task Manager**. c. Select applications that you do not want to launch automatically, and the click **Disable**.
Some software applications, especially games, are stressful on the graphics subsystem.	1. Lower the display resolution for the current application or consult the documentation that came with the application for suggestions on how to improve performance by adjusting parameters in the application. 2. Add more memory. 3. Upgrade the graphics solution.
Cause unknown.	Restart the computer.

Computer powered off automatically and the Power LED flashes red four times and then white two times.

Cause	Solution
Processor thermal protection activated: A fan may be blocked or not turning. OR The heat sink is not properly attached to the processor.	1. Ensure that the computer air vents are not blocked and the processor cooling fan is running. 2. Open the access panel, press the power button, and see if the processor fan (or other system fan) spins. If the fan does not spin, make sure the fan cable is plugged onto the system board header. 3. If fan a plugged in and not spinning, replace it.

System does not power on and the LEDs on the front of the computer are not flashing.

Cause	Solution
System unable to power on.	Press and hold the power button for less than 4 seconds. If the hard drive LED turns white, then: 1. If equipped with a voltage selector, check that the voltage selector (located on the rear of the power supply) is set to the appropriate voltage. Proper voltage setting depends on your region. 2. Remove the expansion cards one at a time until the 5V_aux light on the system board turns on. 3. Replace the system board. OR Press and hold the power button for less than 4 seconds. If the hard drive LED does not turn on white then: 1. Check that the unit is plugged into a working AC outlet. 2. Open the access panel and check that the power button cable is properly connected to the system board. 3. Check that the power supply cables are properly connected to the system board. 4. Check to see if the 5V_aux light on the system board is turned on. If it is turned on, then replace the power button assembly. 5. If the 5V_aux light on the system board is off, then replace the power supply. 6. Replace the system board.

Solving power problems

Common causes and solutions for power problems are listed in the following table.

Power supply shuts down intermittently.

Cause	Solution
If equipped with a voltage selector, voltage selector switch on rear of computer chassis (some models) not switched to correct line voltage (115V or 230V).	Select the proper AC voltage using the selector switch.
Power supply will not turn on because of internal power supply fault.	Replace the power supply.

Computer powered off automatically and the Power LED flashes Red two times, once every second, followed by a two second pause, and the computer beeps two times. (Beeps stop after fifth iteration but LEDs continue flashing.)

Computer powered off automatically and the Power LED flashes red four times and then white two times.

Cause	Solution
Processor thermal protection activated: A fan may be blocked or not turning. OR The heat sink is not properly attached to the processor.	1. Ensure that the computer air vents are not blocked and the processor cooling fan is running. 2. Open the access panel, press the power button, and see if the processor fan (or other system fan) spins. If the fan does not spin, make sure the fan cable is plugged onto the system board header. 3. If fan a plugged in and not spinning, replace it.

Power LED flashes Red four times, once every second, followed by a two second pause, and the computer beeps four times. (Beeps stop after fifth iteration but LEDs continue flashing.)

Computer powered off automatically and the Power LED flashes red three times and then white four times.

Cause	Solution
Power failure (power supply is overloaded).	1. If equipped with a voltage selector, check that the voltage selector, located on the rear of the power supply (some models), is set to the appropriate voltage. Proper voltage setting depends on your region. 2. Open the access panel and ensure the power supply cable is seated into the connector on the system board. 3. Check if a device is causing the problem by removing ALL attached devices (such as hard drives or optical drives and expansion cards). Power on the system. If the system enters POST, then power off and replace one device at a time and repeat this procedure until failure occurs. Replace the device that is causing the failure. Continue adding devices one at a time to ensure all devices are functioning properly. 4. Replace the power supply. 5. Replace the system board.

Solving hard drive problems

Hard drive error occurs.

Cause	Solution
Hard disk has bad sectors or has failed.	1. In Windows 7, click **Start**, click **Computer**, and right-click on a drive. Select **Properties**, and then select the **Tools** tab. Under **Error-checking** click **Check Now**. In Windows 10, type `file` in the taskbar search box, and then select **File Explorer** from the list of applications. In the left column, expand **This PC**, right-click on a drive, select **Properties**, and then select the **Tools** tab. Under **Error checking** click **Check**. 2. Use a utility to locate and block usage of bad sectors. If necessary, reformat the hard disk.

Disk transaction problem.

Cause	Solution
Either the directory structure is bad or there is a problem with a file.	In Windows 7, click **Start**, expand **Computer**, and right-click on a drive. Select **Properties**, and then select the **Tools** tab. Under **Error-checking** click **Check Now**. In Windows 10, type `file` in the taskbar search box, and then select **File Explorer** from the list of applications. In the left column, expand **This PC**, right-click on a drive, select **Properties**, and then select the **Tools** tab. Under **Error checking** click **Check**.

Drive not found (identified).

Cause	Solution
Cable could be loose.	Check cable connections.
The system may not have automatically recognized a newly installed device.	See reconfiguration directions in the Solving Hardware Installation Problems on page 98 section. If the system still does not recognize the new device, check to see if the device is listed within Computer Setup. If it is listed, the probable cause is a driver problem. If it is not listed, the probable cause is a hardware problem. If this is a newly installed drive, run the Computer Setup utility and try adding a POST delay under **Advanced** > **Boot Options**.
The device is attached to a SATA port that has been hidden in Computer Setup.	Run the Computer Setup utility and ensure **Device Available** is selected for the device's SATA port in **Advanced** > **Port Options**.
Drive responds slowly immediately after power-up.	Run Computer Setup and increase the POST Delay in **Advanced** > **Boot Options**.

Nonsystem disk/NTLDR missing message.

Cause	Solution
The system is trying to start from the hard drive but the hard drive may have been damaged.	▲ Perform Drive Protection System (DPS) testing in system ROM.
System files missing or not properly installed.	1. Insert bootable media and restart the computer. 2. Boot to the windows installation media and select the recovery option. If only a restore kit is available, then select the **File Backup Program** option, and then restore the system. 3. Install system files for the appropriate operating system.
Hard drive boot has been disabled in Computer Setup.	Run the Computer Setup utility and enable the hard drive entry in the **Advanced** > **Boot Options** list.
Bootable hard drive is not attached as first in a multi-hard drive configuration.	If attempting to boot from a hard drive, ensure it is attached to the system board dark blue SATA connector.
Bootable hard drive is not listed first in the Boot Order.	Run the Computer Setup utility and select **Advanced** > **Boot Options** and ensure the bootable hard drive is listed immediately under the **Hard Drive** entry.

Computer will not boot from hard drive.

Cause	Solution
The device is attached to a SATA port that has been hidden in Computer Setup.	1. Check SATA cable connections. 2. Run the Computer Setup utility and ensure **Device Available** is selected for the device's SATA port in **Advanced** > **Port Options**.
Boot order is not correct.	Run the Computer Setup utility and change boot sequence in **Advanced** > **Boot Options**.
Hard drive is damaged.	Observe if the front panel Power LED is blinking RED and if any beeps are heard. See POST error messages and diagnostic front panel LEDs and audible codes on page 110 to determine possible causes for the blinking red and beep codes. See the Worldwide Limited Warranty for terms and conditions.

Computer seems to be locked up.

Cause	Solution
Program in use has stopped responding to commands.	1. Use the task manager to close programs that do not respond. 2. Attempt the normal Windows “Shut Down” procedure. If this fails, press the power button for four or more seconds to turn off the power. To restart the computer, press the power button again.

Solving media card reader problems

Media card will not work in a digital camera after formatting it in Windows.

Cause	Solution
By default, Windows will format any media card with a capacity greater than 32MB with the FAT32 format. Some digital cameras use the FAT (FAT16 & FAT12) format and can not operate with a FAT32 formatted card.	Either format the media card in the digital camera or select FAT file system to format the media card in a computer with Windows.

A write-protected or locked error occurs when attempting to write to the media card.

Cause	Solution
Media card is locked. Locking the media card is a safety feature that prevents writing to and deleting from an SD/Memory Stick/PRO card.	If using an SD card, make sure that the lock tab located on the right of the SD card is not in the locked position. If using a Memory Stick/PRO card, make sure that the lock tab located on the bottom of the Memory Stick/PRO card is not in the locked position.

Can not write to the media card.

Cause	Solution
The media card is a read-only memory (ROM) card.	Check the manufacturer's documentation included with your card to see if it writable. Refer to the previous section for a list of compatible cards.
Media card is locked. Locking the media card is a safety feature that prevents writing to and deleting from an SD/Memory Stick/PRO card.	If using an SD card, make sure that the lock tab located on the right of the SD card is not in the locked position. If using a Memory Stick/PRO card, make sure that the lock tab located on the bottom of the Memory Stick/PRO card is not in the locked position.

Unable to access data on the media card after inserting it into a slot.

Cause	Solution
The media card is not inserted properly, is inserted in the wrong slot, or is not supported.	Ensure that the card is inserted properly with the gold contact on the correct side. The green LED will light if inserted properly.

Do not know how to remove a media card correctly.

Cause	Solution
The computer's software is used to safely eject the card.	In Windows 7, click **Start**, select **Computer**, right-click on the corresponding drive icon, and then select **Eject**. Pull the card out of the slot. In Windows 10, type `file` in the taskbar search box, and then select **File Explorer** from the list of applications. In the left column, expand **This PC**, right-click on the corresponding drive icon, and then select **Eject**. Pull the card out of the slot. **NOTE:** Never remove the card when the green LED is flashing

After installing the media card reader and booting to Windows, the reader and the inserted cards are not recognized by the computer.

Cause	Solution
The operating system needs time to recognize the device if the reader was just installed into the computer and you are turning the PC on for the first time.	Wait a few seconds so that the operating system can recognize the reader and the available ports, and then recognize the media inserted in the reader.

After inserting a media card in the reader, the computer attempts to boot from the media card.

Cause	Solution
The inserted media card has boot capability.	1. If you do not want to boot from the media card, remove it during boot or do not select the option to boot from the inserted media card during the boot process. 2. During POST (Power On Self-Test), press F9 to modify the boot menu. 3. Change the boot sequence in F10 Computer Setup.

Solving display problems

If you encounter display problems, see the documentation that came with the monitor and to the common causes and solutions listed in the following table.

Blank screen (no video).

Cause	Solution
Monitor is not turned on and the monitor light is not on.	Turn on the monitor and check that the monitor light is on.
Bad monitor.	Try a different monitor.
The cable connections are not correct.	Check the cable connection from the monitor to the computer and to the electrical outlet.
You may have a screen blanking utility installed or energy saver features are enabled.	Press any key or click the mouse button and type your password (if set).
System ROM is corrupted; system is running in Boot Block Emergency Recovery Mode (indicated by eight beeps).	Reflash the system ROM with the latest BIOS image.
You are using a fixed-sync monitor and it will not sync at the resolution chosen.	Be sure that the monitor can accept the same horizontal scan rate as the resolution chosen.
Computer is in Sleep state.	Press the power button to resume from Sleep state. **CAUTION:** When attempting to resume from Sleep state, do not hold down the power button for more than four seconds. Otherwise, the computer will shut down and you will lose any unsaved data.
Monitor cable is plugged into the wrong connector.	Systems may have a monitor connection on both the motherboard or an add-in card. Try moving the monitor connection to a different connector on the back of the computer
Monitor settings in the computer are not compatible with the monitor.	1. In Control Panel, select **Category** from the **View by** list, then under **Appearance and Personalization**, select **Adjust screen resolution**.

Blank screen (no video).

Cause	Solution
	To access Control Panel in Windows 7, click **Start**, and then select **Control Panel**. To access Control Panel in Windows 10, type `control panel` in the taskbar search box, and then select **Control Panel** from the list of applications. 2. Expand the **Resolution** box, and then use the sliding control to reset the resolution.
Monitor is configured to use an input that is not active.	Use the monitor's on-screen menu controls to select the input that is being driven by the system. Refer to the monitor's user documentation for more information on the on-screen controls and settings.

Blank screen and the power LED flashes Red five times, once every second, followed by a two second pause, and the computer beeps five times. (Beeps stop after fifth iteration but LEDs continue flashing.)

Cause	Solution
Pre-video memory error.	1. Reseat DIMMs. Power on the system. 2. Replace DIMMs one at a time to isolate the faulty module. 3. Replace third-party memory with HP memory. 4. Replace the system board.

Blank screen and the power LED flashes Red six times, once every second, followed by a two second pause, and the computer beeps six times. (Beeps stop after fifth iteration but LEDs continue flashing.)

Cause	Solution
Pre-video graphics error.	For systems with a graphics card: 1. Reseat the graphics card (if applicable). Power on the system. 2. Replace the graphics card (if applicable). 3. Replace the system board. For systems with integrated graphics, replace the system board.

Blank screen and the power LED flashes Red seven times, once every second, followed by a two second pause, and the computer beeps seven times. (Beeps stop after fifth iteration but LEDs continue flashing.)

Cause	Solution
System board failure (ROM detected failure prior to video).	Replace the system board.

Monitor does not function properly when used with energy saver features.

Cause	Solution
Monitor without energy saver capabilities is being used with energy saver features enabled.	Disable monitor energy saver feature.

Dim characters.

Cause	Solution
The brightness and contrast controls are not set properly.	Adjust the monitor brightness and contrast controls.
Cables are not properly connected.	Check that the graphics cable is securely connected to the graphics card (if applicable) or video connector and the monitor.

Blurry video or requested resolution cannot be set.

Cause	Solution
If the graphics controller was upgraded, the correct graphics drivers may not be loaded.	Install the video drivers included in the upgrade kit.
Monitor is not capable of displaying requested resolution.	Change requested resolution.
Graphics card is bad.	Replace the graphics card.

The picture is broken up, rolls, jitters, or flashes.

Cause	Solution
The monitor connections may be incomplete or the monitor may be incorrectly adjusted.	1. Be sure the monitor cable is securely connected to the computer. 2. In a two-monitor system or if another monitor is in close proximity, be sure the monitors are not interfering with each other's electromagnetic field by moving them apart. 3. Fluorescent lights or fans may be too close to the monitor.
Monitor needs to be degaussed.	Degauss the monitor. Refer to the documentation that came with the monitor for instructions.

Image is not centered.

Cause	Solution
Position may need adjustment.	Press the monitor's Menu button to access the OSD menu. Select **ImageControl/ Horizontal Position** or **Vertical Position** to adjust the horizontal or vertical position of the image.

“No Connection, Check Signal Cable” displays on screen.

Cause	Solution
Monitor video cable is disconnected.	Connect the video cable between the monitor and computer. **CAUTION:** Ensure that the computer power is off while connecting the video cable.

“Out of Range” displays on screen.

Cause	Solution
Video resolution and refresh rate are set higher than what the monitor supports.	Restart the computer and enter Safe Mode. Change the settings to a supported setting then restart the computer so that the new settings take effect. To enter Safe Mode in Windows 7: 1. Restart the computer. 2. Press and hold the F8 key as your computer restarts, before the Windows logo appears. If the Windows logo appears, you must restart the computer and try again. 3. On the Advanced Boot Options screen, use the arrow keys to highlight the safe mode option you want, and then press Enter. 4. Log on to your computer with a user account that has administrator rights. When your computer is in safe mode, **Safe Mode** displays in the corners of your monitor. To exit safe mode, restart your computer and let Windows start normally. To enter Safe Mode in Windows 10: 1. Log into the computer using an Administrator account. 2. Type `msconfig` in the taskbar search box, and then select **msconfig** from the list of applications. 3. Click the **Boot** tab, select **Safe boot** and then click **OK**.

High pitched noise coming from inside a flat panel monitor.

Cause	Solution
Brightness and/or contrast settings are too high.	Lower brightness and/or contrast settings.

Fuzzy focus; streaking, ghosting, or shadowing effects; horizontal scrolling lines; faint vertical bars; or unable to center the picture on the screen (flat panel monitors using an analog VGA input connection only).

Cause	Solution
Flat panel monitor’s internal digital conversion circuits may be unable to correctly interpret the output synchronization of the graphics card.	1. Select the monitor’s Auto-Adjustment option in the monitor’s on-screen display menu. 2. Manually synchronize the Clock and Clock Phase on-screen display functions. To download a SoftPaq that will assist you

Fuzzy focus; streaking, ghosting, or shadowing effects; horizontal scrolling lines; faint vertical bars; or unable to center the picture on the screen (flat panel monitors using an analog VGA input connection only).

Cause	Solution
	with the synchronization, go to the following Web site, select the appropriate monitor, and download either SP32347 or SP32202: http://www.hp.com/support
Graphics card is not seated properly or is bad (some models).	1. Reseat the graphics card. 2. Replace the graphics card.

Certain typed symbols do not appear correct.

Cause	Solution
The font you are using does not support that particular symbol.	Use the Character Map to locate and select the appropriate symbol. You can copy the symbol from the Character Map into a document. In Windows 7, click **Start**, select **All Programs**, select **Accessories**, select **System Tools**, and then select **Character Map**. In Windows 10, type `ch` in the taskbar search box, and then select **Character Map** from the list of applications.

Solving audio problems

If the computer has audio features and you encounter audio problems, see the common causes and solutions listed in the following table.

Headset microphone connected to the front is not working or is very quiet.

Cause	Solution
The front Headset connector supports CTIA (Cellular Telephone Industries Association) style headsets and not OMTP (Open Mobile Terminal Platform) style headsets. These differ by the microphone connections.	Make sure that a CTIA style headset is being used or use an OMTP style headset with a commercially available adapter that converts an OMTP headset to the CTIA pinout.

Sound cuts in and out.

Cause	Solution
Processor resources are being used by other open applications.	Shut down all open processor-intensive applications.

Sound does not come out of the speaker or headphones.

Cause	Solution
Software volume control is turned down or muted.	Double-click the **Speaker** icon on the taskbar, then make sure that **Mute** is not selected and use the volume slider to adjust the volume.

Sound does not come out of the speaker or headphones.

Cause	Solution
Audio is hidden in Computer Setup.	Enable the audio in Computer Setup: **Advanced** > **Built-in Device Options**.
The external speakers are not turned on.	Turn on the external speakers.
The audio device may be connected to the wrong jack.	Ensure that the device is connected to the correct jack on the computer. The rear audio jack output is the green receptacle. The speakers should be plugged into the line-out jack and the headphones should be plugged into the headphone jack.
External speakers plugged into the wrong audio jack on a recently installed sound card.	See the sound card documentation for proper speaker connection. The rear audio jack output is the green receptacle.
Headphones or devices connected to the line-out connector mute the internal speaker.	Turn on and use headphones or external speakers, if connected, or disconnect headphones or external speakers.
Computer is in Sleep state.	Press the power button to resume from Sleep state. **CAUTION:** When attempting to resume from Sleep state, do not hold down the power button for more than four seconds. Otherwise, the computer will shut down and you will lose any unsaved data.
Internal speaker is disabled in Computer Setup.	Enable the internal speaker in Computer Setup. Select **Advanced** > **Built-in Device Options**.
The application is set to use a different audio device than speakers.	Some graphics cards support audio over the DisplayPort connection (if applicable), so multiple audio devices may be listed in Device Manager. Make sure the correct device is being used. To access Device Manager in Windows 7, click **Start**, select **Control Panel**, and then select **Device Manager**. To access Device Manager in Windows 10, type `device manager` in the taskbar search box, and then select **Device Manager** from the list of applications.
Some applications can select which audio output device is used.	Make sure the application has selected the correct audio device.
The operating system controls may be set to use a different audio device as the default output device than what is expected.	Set the operating system to use the correct audio device.

Sound from headphones is not clear or muffled.

Cause	Solution
Headphones are plugged into the rear audio output connector. The rear audio output connector is for powered audio devices and is not designed for headphone use.	Plug the headphones into the headphone connector on the front of the computer.

Computer appears to be locked up while recording audio.

Cause	Solution
The hard disk may be full.	Before recording, make sure there is enough free space on the hard disk. You can also try recording the audio file in a compressed format.

Line-in jack is not functioning properly.

Cause	Solution
Jack has been reconfigured in the audio driver or application software.	In the audio driver or application software, reconfigure the jack or set the jack to its default value.

There is no sound or sound volume is too low.

Cause	Solution
The application is set to use a different audio device than speakers.	Some graphics cards support audio over the DisplayPort connection (if applicable), so multiple audio devices may be listed in Device Manager. Make sure the correct device is being used. To access Device Manager in Windows 7, click **Start**, select **Control Panel**, and then select **Device Manager**. To access Device Manager in Windows 10, type `device manager` in the taskbar search box, and then select **Device Manager** from the list of applications.
Some applications can select which audio output device is used.	Make sure the application has selected the correct audio device.
The operating system controls may be set to use a different audio device as the default output device than what is expected.	Set the operating system to use the correct audio device.

Solving printer problems

If you encounter printer problems, see the documentation that came with the printer and to the common causes and solutions listed in the following table.

Printer will not print.

Cause	Solution
Printer is not turned on and online.	Turn the printer on and make sure it is online.
The correct printer drivers for the application are not installed.	1. Install the correct printer driver for the application. 2. Try printing using the MS-DOS command: `DIR C:\ > [printer port]` where `[printer port]` is the address of the printer being used. If the printer works, reload the printer driver. To run MS-DOS commands, press the Windows key + r, type `cmd` in the **Open** box, and then click **OK**.
If you are on a network, you may not have made the connection to the printer.	Make the proper network connections to the printer.
Printer may have failed.	Run printer self-test.

Printer will not turn on.

Cause	Solution
The cables may not be connected properly.	Reconnect all cables and check the power cord and electrical outlet.

Printer prints garbled information.

Cause	Solution
The correct printer driver for the application is not installed.	Install the correct printer driver for the application.
The cables may not be connected properly.	Reconnect all cables.
Printer memory may be overloaded.	Reset the printer by turning it off for one minute, then turn it back on.

Printer will not print.

Cause	Solution
The printer may be out of paper.	Check the paper tray and refill it if it is empty.

Solving keyboard and mouse problems

If you encounter keyboard or mouse problems, see the documentation that came with the equipment and to the common causes and solutions listed in the following table.

A wireless keyboard/mouse is not working correctly. Symptoms include lagging mouse movement, jumpy mouse/keyboard, or no function of mouse/keyboard and external drive.

Cause	Solution
If your computer is equipped with USB 3.0 ports, connected USB 3.0 devices can interfere with the wireless keyboard USB receiver.	Connect the wireless keyboard USB receiver to a USB 2.0 port that is separated from ports with USB 3.0 devices. If you still experience interference, you may have to place the connectors farther apart using an external USB hub.

Keyboard commands and typing are not recognized by the computer.

Cause	Solution
Keyboard connector is not properly connected.	Shut down the computer, reconnect the keyboard to the back of the computer, and then restart the computer.
Program in use has stopped responding to commands.	Shut down your computer using the mouse and then restart the computer.
Keyboard needs repairs.	See the Worldwide Limited Warranty for terms and conditions.
Computer is in Sleep state.	Press the power button to resume from Sleep state.

Keyboard commands and typing are not recognized by the computer.

Cause	Solution
	CAUTION: When attempting to resume from Sleep date, do not hold down the power button for more than four seconds. Otherwise, the computer will shut down and you will lose any unsaved data.

Mouse does not respond to movement or is too slow.

Cause	Solution
Mouse connector is not properly plugged into the back of the computer.	Shut down the computer using the keyboard. Windows 7: 1. Press the Ctrl and Esc keys at the same time (or press the Windows logo key) to display the **Start** menu. 2. Use the arrow keys to select **Shut Down** and then press Enter. 3. After the shutdown is complete, plug the mouse connector into the back of the computer (or the keyboard) and restart. Windows 10: 1. Press the Ctrl and Esc keys at the same time (or press the Windows logo key) to display the **Start** menu. 2. Use the arrow keys to scroll to and select the power icon at the top right on the menu, and then press Enter. 3. Use the arrow keys to select **Shut Down**, and then press Enter. 4. After the shutdown is complete, plug the mouse connector into the back of the computer (or the keyboard) and restart.
Program in use has stopped responding to commands.	Shut down the computer using the keyboard then restart the computer.
Mouse may need cleaning.	Remove the roller ball cover on the mouse and clean the internal components.
Mouse may need repair.	See the Worldwide Limited Warranty for terms and conditions.
Computer is in Sleep state.	Press the power button to resume from Sleep state. **CAUTION:** When attempting to resume from Sleep state, do not hold down the power button for more than four seconds. Otherwise, the computer will shut down and you will lose any unsaved data.

Mouse will only move vertically, horizontally, or movement is jerky.

Cause	Solution
Mouse roller ball or the rotating encoder shafts that make contact with the ball are dirty.	Remove roller ball cover from the bottom of the mouse and clean the internal components with a mouse cleaning kit available from most computer stores.

Solving Hardware Installation Problems

You may need to reconfigure the computer when you add or remove hardware, such as an additional drive or expansion card. If you install a plug and play device, Windows automatically recognizes the device and configures the computer. If you install a non-plug and play device, you must reconfigure the computer after completing installation of the new hardware. In Windows, use the **Add Hardware Wizard** and follow the instructions that appear on the screen.

To open the Add Hardware Wizard, open a Command Prompt and open hdwwiz.exe.

⚠ **WARNING!** When the computer is plugged into an AC power source, voltage is always applied to the system board. To reduce the risk of personal injury from electrical shock and/or hot surfaces, be sure to disconnect the power cord from the wall outlet and allow the internal system components to cool before touching.

Table 6-1 Solving Hardware Installation Problems

A new device is not recognized as part of the system.

Cause	Solution
Device is not seated or connected properly.	Ensure that the device is properly and securely connected and that pins in the connector are not bent down.
Cable(s) of new external device are loose or power cables are unplugged.	Ensure that all cables are properly and securely connected and that pins in the cable or connector are not bent down.
Power switch of new external device is not turned on.	Turn off the computer, turn on the external device, then turn on the computer to integrate the device with the computer system.
When the system advised you of changes to the configuration, you did not accept them.	Reboot the computer and follow the instructions for accepting the changes.
A plug and play board may not automatically configure when added if the default configuration conflicts with other devices.	Use Windows Device Manager to deselect the automatic settings for the board and choose a basic configuration that does not cause a resource conflict. You can also use Computer Setup to reconfigure or disable devices to resolve the resource conflict. To access Device Manager in Windows 7, click **Start**, select **Control Panel**, and then select **Device Manager**. To access Device Manager in Windows 10, type `device manager` in the taskbar search box, and then select **Device Manager** from the list of applications.
USB ports on the computer are disabled in Computer Setup.	Run the Computer Setup utility and ensure that **Device available** is selected for appropriate USB ports under **Advanced** > **Port Options**.

Computer will not start.

Cause	Solution
Wrong memory modules were used in the upgrade or memory modules were installed in the wrong location.	1. Review the documentation that came with the system to determine if you are using the correct memory modules and to verify the proper installation. **NOTE:** DIMM1 or XMM1 must always be installed. DIMM1 must be installed before DIMM2, and DIMM3 must be installed before DIMM4.

Computer will not start.

Cause	Solution
	2. Observe the beeps and LED lights on the front of the computer. Beeps and flashing LEDs are codes for specific problems. 3. If you still cannot resolve the issue, contact Customer Support.

Power LED flashes Red three times and then white two times.

Cause	Solution
Memory is installed incorrectly or is bad.	**CAUTION:** To avoid damage to the DIMMs or the system board, you must unplug the computer power cord before attempting to reseat, install, or remove a DIMM module. 1. Reseat DIMMs. Power on the system. 2. Replace DIMMs one at a time to isolate the faulty module. **NOTE:** DIMM1 or XMM1 must always be installed. DIMM1 must be installed before DIMM2, and DIMM3 must be installed before DIMM4 3. Replace third-party memory with HP memory. 4. Replace the system board.

Solving Network Problems

Some common causes and solutions for network problems are listed in the following table. These guidelines do not discuss the process of debugging the network cabling.

Table 6-2 Solving Network Problems

Network driver does not detect network controller.

Cause	Solution
Network controller is disabled.	1. Run Computer Setup and enable network controller. 2. Enable the network controller in the operating system using Device Manager. To access Device Manager in Windows 7, click **Start**, select **Control Panel**, and then select **Device Manager**. To access Device Manager in Windows 10, type `device manager` in the taskbar search box, and then select **Device Manager** from the list of applications.
Incorrect network driver.	Check the network controller documentation for the correct driver or obtain the latest driver from the manufacturer's Web site.

Network status link light never flashes.

NOTE: The network status light is supposed to flash when there is network activity.

Cause	Solution
No active network is detected.	Check cabling and network equipment for proper connection.
Network controller is not set up properly.	Check for the device status within Windows, such as Device Manager for driver load and the Network Connections applet within Windows for link status. To access Device Manager in Windows 7, click **Start**, select **Control Panel**, and then select **Device Manager**. To access Device Manager in Windows 10, type `device manager` in the taskbar search box, and then select **Device Manager** from the list of applications.
Network controller is disabled.	1. Run Computer Setup and enable network controller. 2. Enable the network controller in the operating system using Device Manager. To access Device Manager in Windows 7, click **Start**, select **Control Panel**, and then select **Device Manager**. To access Device Manager in Windows 10, type `device manager` in the taskbar search box, and then select **Device Manager** from the list of applications.
Network driver is not properly loaded.	Reinstall network drivers.
System cannot autosense the network.	Disable auto-sensing capabilities and force the system into the correct operating mode.

Diagnostics reports a failure.

Cause	Solution
The cable is not securely connected.	Ensure that the cable is securely attached to the network connector and that the other end of the cable is securely attached to the correct device.
The cable is attached to the incorrect connector.	Ensure that the cable is attached to the correct connector.
There is a problem with the cable or a device at the other end of the cable.	Ensure that the cable and device at the other end are operating correctly.
The network controller is defective.	Contact an authorized service provider.

Diagnostics passes, but the computer does not communicate with the network.

Cause	Solution
Network drivers are not loaded, or driver parameters do not match current configuration.	Make sure the network drivers are loaded and that the driver parameters match the configuration of the network controller. Make sure the correct network client and protocol is installed.
The network controller is not configured for this computer.	Select the **Network and Sharing Center** icon in the **Control Panel** and configure the network controller.

Table 6-2 Solving Network Problems (continued)

Diagnostics passes, but the computer does not communicate with the network.

Cause	Solution
	To access Control Panel in Windows 7, click **Start**, and then select **Control Panel**. To access Control Panel in Windows 10, type `control panel` in the taskbar search box, and then select **Control Panel** from the list of applications.

Network controller stopped working when an expansion board was added to the computer.

Cause	Solution
The network controller requires drivers.	Verify that the drivers were not accidentally deleted when the drivers for a new expansion board were installed.

Network controller stops working without apparent cause.

Cause	Solution
The files containing the network drivers are corrupted.	Reinstall the network drivers using the Recovery Disc Set in Windows 7. If necessary, download the softpaq from the web (from a different computer).
The cable is not securely connected.	Ensure that the cable is securely attached to the network connector and that the other end of the cable is securely attached to the correct device.
The network controller is defective.	Contact an authorized service provider.

New network card will not boot.

Cause	Solution
New network card may be defective or may not meet industry-standard specifications.	Install a working, industry-standard NIC, or change the boot sequence to boot from another source.

Cannot connect to network server when attempting Remote System Installation.

Cause	Solution
The network controller is not configured properly.	Verify Network Connectivity, that a DHCP Server is present, and that the Remote System Installation Server contains the NIC drivers for your NIC.

System setup utility reports unprogrammed EEPROM.

Cause	Solution
Unprogrammed EEPROM.	Contact an authorized service provider.

Solving memory problems

If you encounter memory problems, some common causes and solutions are listed in the following table.

CAUTION: Power may still be supplied to the DIMMs when the computer is turned off (depending on the Management Engine (ME) settings). To avoid damage to the DIMMs or the system board, you must unplug the computer power cord before attempting to reseat, install, or remove a memory module.

For those systems that support ECC memory, HP does not support mixing ECC and non-ECC memory. Otherwise, the computer will not boot the operating system.

NOTE: The memory count will be affected by configurations with the Management Engine (ME) enabled. The ME uses 8MB of system memory in single channel mode or 16MB of memory in dual-channel mode to download, decompress, and execute the ME firmware for Out-of-Band (OOB), third-party data storage, and other management functions.

System will not boot or does not function properly after installing additional memory modules.

Cause	Solution
A memory module is not installed in the DIMM1 or XMM1 socket.	Ensure that a memory module is installed in the DIMM1 or XMM1 socket on the system board. This socket must be populated with a memory module.
Memory module is not the correct type or speed grade for the system or the new memory module is not seated properly.	Replace module with the correct industry-standard device for the computer. On some models, ECC and non-ECC memory modules cannot be mixed.

Out of memory error.

Cause	Solution
You have run out of memory to run the application.	Check the application documentation to determine the memory requirements.

Memory count during POST is wrong.

Cause	Solution
The memory modules may not be installed correctly.	Check that the memory modules have been installed correctly and that proper modules are used.
Integrated graphics may use system memory.	No action required.

Insufficient memory error during operation.

Cause	Solution
Too many Terminate and Stay Resident programs (TSRs) are installed.	Delete any TSRs that you do not need.
You have run out of memory for the application.	Check the memory requirements for the application or add more memory to the computer.

Power LED flashes Red five times, once every second, followed by a two second pause, and the computer beeps five times. (Beeps stop after fifth iteration but LEDs continue flashing.)

Cause	Solution
Memory is installed incorrectly or is bad.	1. Reseat DIMMs. Power on the system. 2. Replace DIMMs one at a time to isolate the faulty module. 3. Replace third-party memory with HP memory. 4. Replace the system board.

Solving CD-ROM and DVD problems

If you encounter CD-ROM or DVD problems, see the common causes and solutions listed in the following table or to the documentation that came with the optional device.

System will not boot from CD-ROM or DVD drive.

Cause	Solution
The device is attached to a SATA port that has been hidden in the Computer Setup utility.	Run the Computer Setup utility and ensure **Device Available** is selected for the device's SATA port in **Advanced** > **Port Options**.
Removable Media Boot is disabled in the Computer Setup utility.	Run the Computer Setup utility and enable booting to removable media in **Advanced** > **Boot Options**.
Network Boot is enabled in Computer Setup.	Run the Computer Setup utility and disable Network Boot in **Advanced** > **Boot Options**.
Non-bootable CD in drive.	Try a bootable CD in the drive.
Boot order not correct.	Run the Computer Setup utility and change boot sequence in **Advanced** > **Boot Options**.

Drive not found (identified).

Cause	Solution
Cable could be loose.	Check cable connections.
The system may not have automatically recognized a newly installed device.	See reconfiguration directions in the Solving Hardware Installation Problems on page 98 section. If the system still does not recognize the new device, check to see if the device is listed within Computer Setup. If it is listed, the probable cause is a driver problem. If it is not listed, the probable cause is a hardware problem.

Drive not found (identified).

Cause	Solution
	If this is a newly installed drive, run the Computer Setup utility and try adding a POST delay under **Advanced** > **Power-On Options**.
The device is attached to a SATA port that has been hidden in Computer Setup.	Run the Computer Setup utility and ensure **Device Available** is selected for the device's SATA port in **Advanced** > **Port Options**.
Drive responds slowly immediately after power-up.	Run Computer Setup and increase the POST Delay in **Advanced** > **Power-On Options**.

CD-ROM or DVD devices are not detected or driver is not loaded.

Cause	Solution
Drive is not connected properly or not properly configured.	See the documentation that came with the optional device.

Movie will not play in the DVD drive.

Cause	Solution
Movie may be regionalized for a different country.	See the documentation that came with the DVD drive.
Decoder software is not installed.	Install decoder software.
Damaged media.	Replace media.
Movie rating locked out by parental lock.	Use DVD software to remove parental lock.
Media installed upside down.	Reinstall media.

Cannot eject compact disc (tray-load unit).

Cause	Solution
Disc not properly seated in the drive.	Turn off the computer and insert a thin metal rod into the emergency eject hole and push firmly. Slowly pull the tray out from the drive until the tray is fully extended, then remove the disc.

CD-ROM, CD-RW, DVD-ROM, or DVD-R/RW drive cannot read a disc or takes too long to start.

Cause	Solution
Media is corrupt.	Try different media to confirm whether media is valid.
Media has been inserted upside down.	Re-insert the media with the label facing up.
The DVD-ROM drive takes longer to start because it has to determine the type of media played, such as audio or video.	Wait at least 30 seconds to let the DVD-ROM drive determine the type of media being played. If the disc still does not start, read the other solutions listed for this topic.

CD-ROM, CD-RW, DVD-ROM, or DVD-R/RW drive cannot read a disc or takes too long to start.

Cause	Solution
CD or DVD disc is dirty.	Clean CD or DVD with a CD cleaning kit, available from most computer stores.
Windows does not detect the CD-ROM or DVD-ROM drive.	1. Use Device Manager to remove or uninstall the device. To access Device Manager in Windows 7, click **Start**, select **Control Panel**, and then select **Device Manager**. To access Device Manager in Windows 10, type `device manager` in the taskbar search box, and then select **Device Manager** from the list of applications. 2. Restart the computer and let Windows detect the CD or DVD driver.

Recording or copying CDs is difficult or impossible.

Cause	Solution
Wrong or poor quality media type.	1. Try using a slower speed when recording. 2. Verify that you are using the correct media for the drive. 3. Try a different brand of media. Quality varies widely between manufacturers.

Solving USB flash drive problems

If you encounter USB flash drive problems, common causes and solutions are listed in the following table.

USB flash drive is not seen as a drive letter in Windows.

Cause	Solution
The drive letter after the last physical drive is not available.	Change the default drive letter for the flash drive in Windows.

USB flash drive not found (identified).

Cause	Solution
The device is attached to a USB port that has been hidden in Computer Setup.	Run the Computer Setup utility and enable USB ports in **Advanced** > **Port Options**.
The device was not properly seated before power-up.	Ensure the device is fully inserted into the USB port before applying power to the system

System will not boot from USB flash drive.

Cause	Solution
Boot order is not correct.	Run the Computer Setup utility and change boot sequence in **Advanced** > **Boot Options**.
Removable Media Boot is disabled in the Computer Setup utility.	Run the Computer Setup utility and enable booting to removable media in **Advanced** > **Boot Options**. Ensure USB is enabled in **Storage** > **Boot Order**.

The computer boots to DOS after making a bootable flash drive.

Cause	Solution
Flash drive is bootable.	Install the flash drive only after the operating system boots.
Flash drive is defective.	Try a different flash drive.

Solving front panel component problems

If you encounter problems with devices connected to the front panel, refer to the common causes and solutions listed in the following table.

A USB device, headphone, or microphone is not recognized by the computer.

Cause	Solution
Device is not properly connected.	1. Turn off the computer. 2. Reconnect the device to the front of the computer and restart the computer.
The device does not have power.	If the USB device requires AC power, be sure one end is connected to the device and one end is connected to a live outlet.
The correct device driver is not installed.	1. Install the correct driver for the device. 2. You might need to reboot the computer.
The cable from the device to the computer does not work.	1. If possible, replace the cable. 2. Restart the computer.
The device is not working.	1. Replace the device. 2. Restart the computer.
USB ports on the computer are disabled in Computer Setup.	Run the Computer Setup utility and ensure that the USB ports are set to **Enabled** in **Security > USB Security**.

Solving Internet access problems

If you encounter Internet access problems, consult your Internet Service Provider (ISP) or refer to the common causes and solutions listed in the following table.

Unable to connect to the Internet.

Cause	Solution
Internet Service Provider (ISP) account is not set up properly.	Verify Internet settings or contact your ISP for assistance.
Web browser is not set up properly.	Verify that the Web browser is installed and set up to work with your ISP.
Cable/DSL modem is not plugged in.	Plug in cable/DSL modem. You should see a “power” LED light on the front of the cable/DSL modem.
Cable/DSL service is not available or has been interrupted due to bad weather.	Try connecting to the Internet at a later time or contact your ISP. (If the cable/DSL service is connected, the “cable” LED light on the front of the cable/DSL modem will be on.)
The CAT5 UTP cable is disconnected.	Connect the CAT5 UTP cable between the cable modem and the computers’s RJ-45 connector. (If the connection is good, the “PC” LED light on the front of the cable/DSL modem will be on.)
IP address is not configured properly.	Contact your ISP for the correct IP address.
Cookies are corrupted. (A “cookie” is a small piece of information that a Web server can store temporarily with the Web browser. This is useful for having the browser remember some specific information that the Web server can later retrieve.)	Windows 7: 1. Select **Start** > **Control Panel**. 2. Click **Internet Options**.

Unable to connect to the Internet.

Cause	Solution
	3. In the **Browsing history** section on the **General** tab, click the **Delete** button. 4. Select the **Cookies** check box and click the **Delete** button. Windows 10: 1. Type `control panel` in the taskbar search box, and then select **Control Panel** from the list of applications. 2. Click **Internet Options**. 3. In the **Browsing history** section, click the **Delete** button. 4. Select the **Cookies and website data** check box and click the **Delete** button.

Cannot automatically launch Internet programs.

Cause	Solution
You must log on to your ISP before some programs will start.	Log on to your ISP and launch the desired program.

Solving software problems

Most software problems occur as a result of the following:

- The application was not installed or configured correctly.
- There is insufficient memory available to run the application.
- There is a conflict between applications.
- Be sure that all the needed device drivers have been installed.
- If you have installed an operating system other than the factory-installed operating system, check to be sure it is supported on the system.

If you encounter software problems, see the applicable solutions listed in the following table.

Computer will not continue and the HP logo does not display.

Cause	Solution
ROM issue - POST error has occurred.	Observe the beeps and LED lights on the front of the computer. See POST error messages and diagnostic front panel LEDs and audible codes on page 110 to determine possible causes. See the Worldwide Limited Warranty for terms and conditions.

“Illegal Operation has Occurred” error message is displayed.

Cause	Solution
Software being used is not Microsoft-certified for your version of Windows.	Verify that the software is certified by Microsoft for your version of Windows (see program packaging for this information).
Configuration files are corrupt.	If possible, save all data, close all programs, and restart the computer.

7 POST error messages and diagnostic front panel LEDs and audible codes

This appendix lists the error codes, error messages, and the various indicator light and audible sequences that you may encounter during Power-On Self-Test (POST) or computer restart, the probable source of the problem, and steps you can take to resolve the error condition.

POST Message Disabled suppresses most system messages during POST, such as memory count and non-error text messages. If a POST error occurs, the screen will display the error message. To manually switch to the POST Messages Enabled mode during POST, press any key (except F10, F11, or F12). The default mode is POST Message Disabled.

The speed at which the computer loads the operating system and the extent to which it is tested are determined by the POST mode selection.

Quick Boot is a fast startup process that does not run all of the system level tests, such as the memory test. Full Boot runs all of the ROM-based system tests and takes longer to complete.

Full Boot may also be enabled to run every 1 to 30 days on a regularly scheduled basis. To establish the schedule, reconfigure the computer to the Full Boot Every x Days mode, using Computer Setup.

NOTE: For more information on Computer Setup, see Computer Setup (F10) Utility on page 67.

POST numeric codes and text messages

This section covers those POST errors that have numeric codes associated with them. The section also includes some text messages that may be encountered during POST.

NOTE: The computer will beep once after a POST text message is displayed on the screen.

Control panel message	Description	Recommended action
002-Option ROM Checksum Error	System ROM or expansion board option ROM checksum.	1. Verify the correct ROM. 2. Flash the ROM if needed. 3. If an expansion board was recently added, remove it to see if the problem remains. 4. Clear CMOS. (See Password security and resetting CMOS on page 117.) 5. If the message disappears, there may be a problem with the expansion card. 6. Replace the system board.
003-System Board Failure	DMA or timers.	1. Clear CMOS. (See Password security and resetting CMOS on page 117.) 2. Remove expansion boards. 3. Replace the system board.
005-Real-Time Clock Power Loss	Invalid time or date in configuration memory.	Reset the date and time under **Control Panel** (Computer Setup can also be used). If the

Control panel message	Description	Recommended action
	RTC (real-time clock) battery may need to be replaced.	problem persists, replace the RTC battery. See the Removal and Replacement section for instructions on installing a new battery.
008–Microcode Patch Error	Processor is not supported by the BIOS.	1. Upgrade BIOS to proper version. 2. Change the processor.
009–PMM Allocation Error during MEBx Download	Memory error during POST execution of the Management Engine (ME) BIOS Extensions option ROM.	1. Reboot the computer. 2. Unplug the power cord, re-seat the memory modules, and reboot the computer. 3. If the memory configuration was recently changed, unplug the computer, restore the original memory configuration, and reboot the computer. 4. If the error persists, replace the system board.
00A-Product Information Not Valid	The product information programmed into the system board is missing or invalid.	Use Computer Setup to update this information.
00B-MEBx Module did not checksum correctly	Memory error during POST execution of the Management Engine (ME) BIOS Extensions option ROM.	1. Reboot the computer. 2. Unplug the power cord, re-seat the memory modules, and reboot the computer. 3. If the memory configuration was recently changed, unplug the power cord, restore the original memory configuration, and reboot the computer. 4. If the error persists, replace the system board.
00C-PMM Deallocation Error during MEBx Cleanup	Memory error during POST execution of the Management Engine (ME) BIOS Extensions option ROM.	1. Reboot the computer. 2. Unplug the power cord, re-seat the memory modules, and reboot the computer. 3. If the memory configuration was recently changed, unplug the power cord, restore the original memory configuration, and reboot the computer. 4. If the error persists, replace the system board.
00D-Setup Error during MEBx Execution	MEBx selection or exit resulted in a setup failure.	1. Reboot the computer. 2. Unplug the power cord, re-seat the memory modules, and reboot the computer. 3. If the memory configuration was recently changed, unplug the power cord, restore the original memory configuration, and reboot the computer. 4. If the error persists, replace the system board.

Control panel message	Description	Recommended action
00E-Inventory Error during MEBx Execution	BIOS information passed to the MEBx resulted in a failure.	1. Reboot the computer. 2. If the error persists, update to the latest BIOS version. 3. If the error still persists, replace the system board.
00F-Interface Error during MEBx Execution	MEBx operation experienced a hardware error during communication with the ME.	1. Reboot the computer. 2. If the error persists, update to the latest BIOS version. 3. If the error still persists, replace the system board.
100-Front Audio Not Connected	Front audio cable has been detached or unseated from system board.	Reconnect or replace front audio cable.
2E1-MemorySize Error	Memory amount has changed since the last boot (memory added or removed).	The system memory size is different from the last startup. The most common reason is the removal of memory from the system board. Press the F1 key to save the memory changes. If this message persists, verify that the memory modules are installed correctly.
2E2-Memory Error	Memory module configuration failed during boot up.	1. Ensure memory modules are correctly installed. 2. Verify proper memory module type. 3. Remove and replace the identified faulty memory module(s). 4. If the error persists after replacing memory modules, replace the system board.
2E3-Incompatible Memory Module in Memory Socket(s) X, X, ...	A memory module in memory socket identified in the error message is missing critical SPD information, or is incompatible with the chipset.	1. Verify proper memory module type. 2. Try another memory socket. 3. Replace with a supported module.
2E4-DIMM Configuration Warning	The current memory configuration is not optimized.	Rearrange the DIMMs so that each channel has the same amount of memory.
2E5-ECC Memory Module Detected on Unsupported Platform	Recently added memory module(s) support ECC memory error correction.	1. If additional memory was recently added, remove it to see if the problem remains. 2. Check product documentation for memory support information.
2E6–Memory Not Configured Correctly for Proper MEBx Execution	DIMM1 is not installed.	Make sure there is a memory module in the DIMM1 socket and that it is properly seated.
300–Configuration Change Warning	The storage device configuration will be updated as shown.	Not applicable
301-Hard Disk 1: SMART Hard Drive Detects Imminent Failure	Hard drive is about to fail. (Some hard drives have a hard drive firmware patch that will fix an erroneous error message.)	1. Determine if hard drive is giving correct error message. Run the Drive Protection System test under using F2 Diagnostics when booting the computer. 2. Apply hard drive firmware patch if applicable. (Available at http://www.hp.com/support.)

Control panel message	Description	Recommended action
		3. Back up contents and replace hard drive.
302-Hard Disk 2: SMART Hard Drive Detects Imminent Failure	Hard drive is about to fail. (Some hard drives have a hard drive firmware patch that will fix an erroneous error message.)	1. Determine if hard drive is giving correct error message. Run the Drive Protection System test under using F2 Diagnostics when booting the computer. 2. Apply hard drive firmware patch if applicable. (Available at http://www.hp.com/support.) 3. Back up contents and replace hard drive.
309 – 30C: Hard Disk 3–6: SMART Hard Drive Detects Imminent Failure	Hard drive is about to fail. (Some hard drives have a hard drive firmware patch that will fix an erroneous error message.)	1. Determine if hard drive is giving correct error message. Run the Drive Protection System test under using F2 Diagnostics when booting the computer. 2. Apply hard drive firmware patch if applicable. (Available at http://www.hp.com/support.) 3. Back up contents and replace hard drive.
3F0–Boot Device Not Found	Boot device not found.	Insert boot device or load operating system.
3F1–Hard Disk 1 Error	Hard disk 1 error.	1. Check and/or replace cables. 2. Clear CMOS. (See Password security and resetting CMOS on page 117.) 3. Replace the hard disk drive.
3F2–Hard Disk 2 Error	Hard disk 2 error.	1. Check and/or replace cables. 2. Clear CMOS. (See Password security and resetting CMOS on page 117.) 3. Replace the hard disk drive.
400-Serial Port A Address Conflict Detected	Both external and internal serial ports are assigned to the same resources.	1. Remove any serial port expansion cards. 2. Clear CMOS. (See Password security and resetting CMOS on page 117.) 3. Reconfigure card resources and/or run Computer Setup or Windows utilities.
401-Serial Port B Address Conflict Detected	Both external and internal serial ports are assigned to the same resources.	1. Remove any serial port expansion cards. 2. Clear CMOS. (See Password security and resetting CMOS on page 117.) 3. Reconfigure card resources and/or run Computer Setup or Windows utilities.
402-Serial Port C Address Conflict Detected	Both external and internal serial ports are assigned to the same resources.	1. Remove any serial port expansion cards. 2. Clear CMOS. (See Password security and resetting CMOS on page 117.) 3. Reconfigure card resources and/or run Computer Setup or Windows utilities.
403-Serial Port D Address Conflict Detected	Both external and internal serial ports are assigned to the same resources.	1. Remove any serial port expansion cards. 2. Clear CMOS. (See Password security and resetting CMOS on page 117.)

Control panel message	Description	Recommended action
		3. Reconfigure card resources and/or run Computer Setup or Windows utilities.
419-Out of Memory Space for Option ROMs	Recently added PCI expansion card contains an option ROM too large to download during POST.	▲ If a PCI expansion card was recently added, remove it to see if the problem remains.
41A-Front USB1/USB2 Not Connected	Front USB cable has been detached or unseated from system board.	Reconnect or replace front USB cable.
41B-Device in PCI Express Slot Failed To Initialize	There is an incompatibility or problem with a PCIe device and the system or PCIe link could not be configured to a valid bus width or speed.	Try rebooting the system. If the error reoccurs, the device may not work with this system
43A-USB Type-C I2C Not Connected	Cable is required between I2C on card and USB-C on the system board.	Install cable between I2C on card and USB-C on the system board.
43B-More Than One USB type-C Cards Are Installed	More than one USB type-C card is installed.	Remove USB type-C card so only one is installed.
500–BIOS Recovery	A system BIOS recovery has occurred.	Not applicable.
70x-Wireless Mode Not Supported	The system has detected a wireless module installed in the system that is not supported and has been disabled.	Replace with a supported module.
800-Keyboard Error	Keyboard failure.	1. Reconnect keyboard with computer turned off. 2. Check connector for bent or missing pins. 3. Ensure that none of the keys are depressed. 4. Replace keyboard.
801-Keyboard or System Unit Error	Keyboard failure.	1. Reconnect the keyboard with computer turned off. 2. Ensure that none of the keys are depressed. 3. Replace the keyboard. 4. Replace the system board.
900-CPU Fan Not Detected	CPU fan is not connected or may have malfunctioned.	1. Reseat CPU fan. 2. Reseat fan cable. 3. Replace CPU fan.
901-Chassis, Rear Chassis, or Front Chassis Fan not Detected	Chassis, rear chassis, or front chassis fan is not connected or may have malfunctioned.	1. Reseat chassis, rear chassis, or front chassis fan. 2. Reseat fan cable. 3. Replace chassis, rear chassis, or front chassis fan.
903-Computer Cover Has Been Removed Since Last System Startup		N/A
904-SATA Cabling Error	One or more SATA devices are improperly attached. For optimal performance, the SATA 0 and SATA 1 ports should be used for hard drives before other ports.	Ensure SATA connectors are used in ascending order. For one device, use SATA 0. For two devices, use SATA 0 and SATA 1. For three devices, use SATA 0, SATA 1, and SATA 2.

Control panel message	Description	Recommended action
90B-Fan Failure	The system has detected that a cooling fan is not operating correctly.	1. Reseat fan. 2. Reseat fan cable. 3. Replace fan.
90D-System Temperature	Thermal shutdown occurred. The system BIOS has detected your machine was previously shut down to avoid overheating. Overheating may occur if the cooling vents are blocked or the operating temperature exceeds the system specifications. The machine should return to normal operation once the situation is resolved.	Make sure system has proper airflow.
90E-Power Supply Fan Not detected	Power supply fan is not connected or may have malfunctioned.	1. Reseat power supply fan. 2. Reseat fan cable. 3. Replace power supply fan.
910–Filter Warning	Airflow filter is dirty.	Replace the airflow filter.

Interpreting system validation diagnostic front panel LEDs and audible codes

During the system validation phase that occurs at system startup, the BIOS validates the functionality of the following subsystems and conditions:

- AC adapter
- System board power
- Processor failure
- BIOS corruption
- Memory failure
- Graphics failure
- System board failure
- BIOS authentication failure

If an error is detected, specific patterns of long and short blinks, accompanied by long and short beeps (where applicable) are used to identify the error. These patterns will make up a two part code:

- Major – the category of the error
- Minor – the specific error within the category

NOTE: Single beep/blink codes are not used.

Number of long beeps/blinks	Error category
1	Not used
2	BIOS
3	Hardware

4	Thermal
5	System board

Patterns of blink/beep codes are determined by using the following parameters:

- 1 second pause occurs after the last major blink.
- 2 second pause occurs after the last minor blink.
- Beep error code sequences occur for the first 5 iterations of the pattern and then stop.
- Blink error code sequences continue until the computer is unplugged or the power button is pressed.

NOTE: Not all diagnostic lights and audible codes are available on all models.

The red LED blinks to represent the major error category (long blinks). The white LED blinks to represent the minor error category (short blinks). For example, '3.5' indicates 3 long red blinks and 5 short white blinks to communicate the processor is not detected.

Category	Major/minor code	Description
BIOS	2.2	The main area (DXE) of BIOS has become corrupted and there is no recovery binary image available.
	2.3	The embedded controller policy requires the user to enter a key sequence.
	2.4	The embedded controller is checking or recovering the boot block.
Hardware	3.2	The embedded controller has timed out waiting for BIOS to return from memory initialization.
	3.3	The embedded controller has timed out waiting for BIOS to return from graphics initialization.
	3.4	The system board displays a power failure (crowbar).*
	3.5	The processor is not detected.*
	3.6	The processor does not support an enabled feature.
Thermal	4.2	A processor over temperature condition has been detected.*
	4.3	An ambient temperature over temperature condition has been detected.
	4.4	An MXM over temperature condition has been detected.
System board	5.2	The embedded controller cannot find valid firmware.
	5.3	The embedded controller has timed out waiting for the BIOS.
	5.4	The embedded controller has timed out waiting for BIOS to return from system board initialization.
	5.5	The embedded controller rebooted the system after a possible lockup condition had been detected through the use of a System Health Timer, Automated System Recovery Timer, or other mechanism.

* Indicates hardware triggered event; all other events are controlled by the BIOS.

8 Password security and resetting CMOS

This computer supports security password features, which can be established through the Computer Setup Utilities menu.

This computer supports two security password features that are established through the Computer Setup Utilities menu: administrator password and power-on password. When you establish only an administrator password, any user can access all the information on the computer except Computer Setup. When you establish only a power-on password, the power-on password is required to access Computer Setup and any other information on the computer. When you establish both passwords, only the administrator password will give you access to Computer Setup.

When both passwords are set, the administrator password can also be used in place of the power-on password as an override to log in to the computer. This is a useful feature for a network administrator.

If you forget one or both passwords, you can clear all passwords by powering off the system, opening the cover, temporarily removing the PSWD jumper, and booting once. This will erase the administrator and power-on passwords. You must restore the jumper to create new passwords.

⚠ **CAUTION:** Pushing the CMOS button with power removed will reset the BIOS settings to factory defaults. It may be useful to back up the BIOS settings or save them as custom defaults before resetting them in case they are needed later. Back up can be performed in Computer Setup or using the BiosConfigUtility tool available from www.hp.com. See Computer Setup (F10) Utility on page 67 for information on backing up the BIOS settings.

Resetting the password jumper

⚠ **CAUTION:** Stringent security is a mode where there is no physical bypass of the password function. If enabled, removing the password jumper will be ignored. To enable this mode, change the security setting **Clear Password Jumper** in Password Policies to **Ignore**.

If you lose or forget the password when in stringent security mode, the system can only be reset by System Management Command. This is a way for HP Service and Support to provide a secure method to access the BIOS and command a password reset for a specifically identified unit under the direction of the owner. This scenario may not be covered under warranty.

To prevent needing a customer service event to restore access to the system, record your configured administrator and power-on passwords in a safe place away from your computer.

To disable the power-on or administrator password features, or to clear the power-on or administrator passwords, complete the following steps:

1. Shut down the operating system properly, then turn off the computer and any external devices, and disconnect the power cord from the power outlet.
2. With the power cord disconnected, press the power button again to drain the system of any residual power.

WARNING! To reduce the risk of personal injury from electrical shock and/or hot surfaces, be sure to disconnect the power cord from the wall outlet, and allow the internal system components to cool before touching.

CAUTION: When the computer is plugged in, the power supply always has voltage applied to the system board even when the unit is turned off. Failure to disconnect the power cord can result in damage to the system.

Static electricity can damage the electronic components of the computer or optional equipment. Before beginning these procedures, ensure that you are discharged of static electricity by briefly touching a grounded metal object. See the *Safety & Regulatory Information* guide for more information.

3. Remove the access panel.
4. Locate the header and jumper.

NOTE: The password jumper is green so that it can be easily identified. For assistance locating the password jumper and other system board components, see the system board components image at System board callouts on page 65.

5. Remove the jumper from pins 1 and 2.
6. Place the jumper on either pin 1 or 2, but not both, so that it does not get lost.
7. Replace the access panel and reconnect the external equipment.
8. Plug in the computer and turn on power. Allow the operating system to start. This clears the current passwords and disables the password features.
9. Shut down the computer, unplug the power, and disconnect the external equipment.
10. Remove the access panel.
11. Place the jumper on pins 1 and 2.
12. Replace the access panel.
13. Reconnect the external equipment and plug in the computer.

Clearing and resetting the BIOS

The CMOS button resets BIOS settings to default, but does not clear the passwords or affect any of the other Security settings. On Intel systems with advanced manageability features, the CMOS button will also partially unprovision AMT.

1. Turn off the computer and any external devices, and disconnect the power cord from the power outlet.
2. Disconnect the keyboard, monitor, and any other external equipment connected to the computer.

WARNING! To reduce the risk of personal injury from electrical shock and/or hot surfaces, be sure to disconnect the power cord from the wall outlet, and allow the internal system components to cool before touching.

CAUTION: When the computer is plugged in, the power supply always has voltage applied to the system board even when the unit is turned off. Failure to disconnect the power cord can result in damage to the system.

Static electricity can damage the electronic components of the computer or optional equipment. Before beginning these procedures, ensure that you are discharged of static electricity by briefly touching a grounded metal object. See the *Safety & Regulatory Information* guide for more information.

3. Remove the access panel.

CAUTION: Pushing the CMOS button will reset CMOS values to factory defaults. It is important to back up the computer CMOS settings before resetting them in case they are needed later. Back up is easily done through Computer Setup. See Computer Setup (F10) Utility on page 67 for information on backing up the CMOS settings.

4. Locate, press, and hold the CMOS button in for five seconds.

NOTE: Make sure you have disconnected the AC power cord from the wall outlet. The CMOS button will not clear CMOS if the power cord is connected.

NOTE: For assistance locating the CMOS button and other system board components, see the system board components image at System board callouts on page 65.

5. Replace the access panel.
6. Reconnect the external devices.
7. Plug in the computer and turn on power.

NOTE: You will receive POST error messages after clearing CMOS and rebooting advising you that configuration changes have occurred. Use Computer Setup to reset any special system setups along with the date and time.

For instructions on Computer Setup, see Computer Setup (F10) Utility on page 67.

9 Using HP PC Hardware Diagnostics (UEFI)

HP PC Hardware Diagnostics is a Unified Extensible Firmware Interface (UEFI) that allows you to run diagnostic tests to determine whether the computer hardware is functioning properly. The tool runs outside the operating system so that it can isolate hardware failures from issues that are caused by the operating system or other software components.

When HP PC Hardware Diagnostics (UEFI) detects a failure that requires hardware replacement, a 24-digit Failure ID code is generated. This ID code can then be provided to support to help determine how to correct the problem.

NOTE: To start diagnostics on a convertible computer, your computer must be in notebook mode and you must use the keyboard attached.

To start HP PC Hardware Diagnostics (UEFI), follow these steps:

1. Turn on or restart the computer, and quickly press esc.
2. Press f2.

   The BIOS searches three places for the diagnostic tools, in the following order:

   a. Connected USB drive

      NOTE: To download the HP PC Hardware Diagnostics (UEFI) tool to a USB drive, see Downloading HP PC Hardware Diagnostics (UEFI) to a USB device on page 120.

   b. Hard drive

   c. BIOS
3. When the diagnostic tool opens, select the type of diagnostic test you want to run, and then follow the on-screen instructions.

NOTE: If you need to stop a diagnostic test, press esc.

Downloading HP PC Hardware Diagnostics (UEFI) to a USB device

NOTE: The HP PC Hardware Diagnostics (UEFI) download instructions are provided in English only, and you must use a Windows computer to download and create the HP UEFI support environment because only .exe files are offered.

There are two options to download HP PC Hardware Diagnostics to a USB device.

Download the latest UEFI version

1. Go to http://www.hp.com/go/techcenter/pcdiags. The HP PC Diagnostics home page is displayed.
2. In the HP PC Hardware Diagnostics section, select the **Download** link, and then select **Run**.

Download any version of UEFI for a specific product

1. Go to http://www.hp.com/support.
2. Select **Get software and drivers**.

3. Enter the product name or number.

   – or –

   Select **Identify now** to let HP automatically detect your product.

4. Select your computer, and then select your operating system.

5. In the **Diagnostic** section, follow the on-screen instructions to select and download the UEFI version you want.

10 Backing up, restoring, and recovering

Backing up, restoring, and recovering in Windows 10

This chapter provides information about the following processes. The information in the chapter is standard procedure for most products.

- Creating recovery media and backups
- Restoring and recovering your system

For additional information, refer to the HP support assistant app.

▲ Type `support` in the taskbar search box, and then select the **HP Support Assistant** app.

– or –

Click the question mark icon in the taskbar.

IMPORTANT: If you will be performing recovery procedures on a tablet, the tablet battery must be at least 70% charged before you start the recovery process.

IMPORTANT: For a tablet with a detachable keyboard, connect the keyboard to the keyboard dock before beginning any recovery process.

Creating recovery media and backups

The following methods of creating recovery media and backups are available on select products only. Choose the available method according to your computer model.

- Use HP Recovery Manager to create HP Recovery media after you successfully set up the computer. This step creates a backup of the HP Recovery partition on the computer. The backup can be used to reinstall the original operating system in cases where the hard drive is corrupted or has been replaced. For information on creating recovery media, see Creating HP Recovery media (select products only) on page 122. For information on the recovery options that are available using the recovery media, see Using Windows tools on page 123.
- Use Windows tools to create system restore points and create backups of personal information.

  For more information, see Recovering using HP Recovery Manager on page 124.

NOTE: If storage is 32 GB or less, Microsoft System Restore is disabled by default.

Creating HP Recovery media (select products only)

If possible, check for the presence of the Recovery partition and the Windows partition. From the **Start** menu, select **File Explorer**, and then select **This PC**.

- If your computer does not list the Windows partition and the Recovery partition, you can obtain recovery media for your system from support. See the *Worldwide Telephone Numbers* booklet included with the computer. You can also find contact information on the HP website. Go to http://www.hp.com/support, select your country or region, and follow the on-screen instructions.

You can use Windows tools to create system restore points and create backups of personal information, see Using Windows tools on page 123.

- If your computer does list the Recovery partition and the Windows partition, you can use HP Recovery Manager to create recovery media after you successfully set up the computer. HP Recovery media can be used to perform system recovery if the hard drive becomes corrupted. System recovery reinstalls the original operating system and software programs that were installed at the factory and then configures the settings for the programs. HP Recovery media can also be used to customize the system or restore the factory image if you replace the hard drive.
  - Only one set of recovery media can be created. Handle these recovery tools carefully, and keep them in a safe place.
  - HP Recovery Manager examines the computer and determines the required storage capacity for the media that will be required.
  - To create recovery discs, your computer must have an optical drive with DVD writer capability, and you must use only high-quality blank DVD-R, DVD+R, DVD-R DL, or DVD+R DL discs. Do not use rewritable discs such as CD±RW, DVD±RW, double-layer DVD±RW, or BD-RE (rewritable Blu-ray) discs; they are not compatible with HP Recovery Manager software. Or, instead, you can use a high-quality blank USB flash drive.
  - If your computer does not include an integrated optical drive with DVD writer capability, but you would like to create DVD recovery media, you can use an external optical drive (purchased separately) to create recovery discs. If you use an external optical drive, it must be connected directly to a USB port on the computer; the drive cannot be connected to a USB port on an external device, such as a USB hub. If you cannot create DVD media yourself, you can obtain recovery discs for your computer from HP. See the *Worldwide Telephone Numbers* booklet included with the computer. You can also find contact information on the HP website. Go to http://www.hp.com/support, select your country or region, and follow the on-screen instructions.
  - Be sure that the computer is connected to AC power before you begin creating the recovery media.
  - The creation process can take an hour or more. Do not interrupt the creation process.
  - If necessary, you can exit the program before you have finished creating all of the recovery DVDs. HP Recovery Manager will finish burning the current DVD. The next time you start HP Recovery Manager, you will be prompted to continue.

To create HP Recovery media:

IMPORTANT: For a tablet with a detachable keyboard, connect the keyboard to the keyboard dock before beginning these steps.

1. Type `recovery` in the taskbar search box, and then select **HP Recovery Manager**.
2. Select **Create recovery media**, and then follow the on-screen instructions.

If you ever need to recover the system, see Recovering using HP Recovery Manager on page 124.

Using Windows tools

You can create recovery media, system restore points, and backups of personal information using Windows tools.

NOTE: If storage is 32 GB or less, Microsoft System Restore is disabled by default.

For more information and steps, see the Get started app.

- Select the **Start** button, and then select the **Get started** app.

Restore and recovery

There are several options for recovering your system. Choose the method that best matches your situation and level of expertise:

IMPORTANT: Not all methods are available on all products.

- Windows offers several options for restoring from backup, refreshing the computer, and resetting the computer to its original state. For more information see the Get started app.

  ▲ Select the **Start** button, and then select the **Get started** app.

- If you need to correct a problem with a preinstalled application or driver, use the Reinstall drivers and/or applications option (select products only) of HP Recovery Manager to reinstall the individual application or driver.

  ▲ Type `recovery` in the taskbar search box, select **HP Recovery Manager**, select **Reinstall drivers and/or applications**, and then follow the on-screen instructions.

- If you want to recover the Windows partition to original factory content, you can choose the System Recovery option from the HP Recovery partition (select products only) or use the HP Recovery media. For more information, see Recovering using HP Recovery Manager on page 124. If you have not already created recovery media, see Creating HP Recovery media (select products only) on page 122.

- On select products, if you want to recover the computer's original factory partition and content, or if you have replaced the hard drive, you can use the Factory Reset option of HP Recovery media. For more information, see Recovering using HP Recovery Manager on page 124.

- On select products, if you want to remove the recovery partition to reclaim hard drive space, HP Recovery Manager offers the Remove Recovery Partition option.

  For more information, see Removing the HP Recovery partition (select products only) on page 127.

Recovering using HP Recovery Manager

HP Recovery Manager software allows you to recover the computer to its original factory state by using the HP Recovery media that you either created or that you obtained from HP, or by using the HP Recovery partition (select products only). If you have not already created recovery media, see Creating HP Recovery media (select products only) on page 122.

What you need to know before you get started

- HP Recovery Manager recovers only software that was installed at the factory. For software not provided with this computer, you must either download the software from the manufacturer's website or reinstall the software from the media provided by the manufacturer.

  IMPORTANT: Recovery through HP Recovery Manager should be used as a final attempt to correct computer issues.

- HP Recovery media must be used if the computer hard drive fails. If you have not already created recovery media, see Creating HP Recovery media (select products only) on page 122.

- To use the Factory Reset option (select products only), you must use HP Recovery media. If you have not already created recovery media, see Creating HP Recovery media (select products only) on page 122.

- If your computer does not allow the creation of HP Recovery media or if the HP Recovery media does not work, you can obtain recovery media for your system from support. See the *Worldwide Telephone Numbers* booklet included with the computer. You can also find contact information from the HP website. Go to http://www.hp.com/support, select your country or region, and follow the on-screen instructions.

IMPORTANT: HP Recovery Manager does not automatically provide backups of your personal data. Before beginning recovery, back up any personal data you want to retain.

Using HP Recovery media, you can choose from one of the following recovery options:

NOTE: Only the options available for your computer display when you start the recovery process.

- System Recovery—Reinstalls the original operating system, and then configures the settings for the programs that were installed at the factory.
- Factory Reset—Restores the computer to its original factory state by deleting all information from the hard drive and re-creating the partitions. Then it reinstalls the operating system and the software that was installed at the factory.

The HP Recovery partition (select products only) allows System Recovery only.

Using the HP Recovery partition (select products only)

The HP Recovery partition allows you to perform a system recovery without the need for recovery discs or a recovery USB flash drive. This type of recovery can be used only if the hard drive is still working.

To start HP Recovery Manager from the HP Recovery partition:

IMPORTANT: For a tablet with a detachable keyboard, connect the keyboard to the keyboard dock before beginning these steps (select products only).

1. Type `recovery` in the taskbar search box, select **Recovery Manager**, and then select **HP Recovery Environment**.

   - or-

   For computers or tablets with keyboards attached, press f11 while the computer boots, or press and hold f11 as you press the power button.

   For tablets without keyboards:

   Turn on or restart the tablet, and then quickly hold down the volume up button; then select **f11**.

   - or -

   Turn on or restart the tablet, and then quickly hold down the volume down button; then select **f11**.

   - or -

   Turn on or restart the tablet, and then quickly hold down the Windows button; then select **f11**.
2. Select **Troubleshoot** from the boot options menu.
3. Select **Recovery Manager**, and then follow the on-screen instructions.

Using HP Recovery media to recover

You can use HP Recovery media to recover the original system. This method can be used if your system does not have an HP Recovery partition or if the hard drive is not working properly.

1. If possible, back up all personal files.
2. Insert the HP Recovery media, and then restart the computer.

   NOTE: If the computer does not automatically restart in HP Recovery Manager, change the computer boot order. See Changing the computer boot order on page 126.
3. Follow the on-screen instructions.

Changing the computer boot order

If your computer does not restart in HP Recovery Manager, you can change the computer boot order, which is the order of devices listed in BIOS where the computer looks for startup information. You can change the selection to an optical drive or a USB flash drive.

To change the boot order:

IMPORTANT: For a tablet with a detachable keyboard, connect the keyboard to the keyboard dock before beginning these steps.

1. Insert the HP Recovery media.
2. Access the system **Startup** menu.

   For computers or tablets with keyboards attached:

   - Turn on or restart the computer or tablet, quickly press esc, and then press f9 for boot options.

   For tablets without keyboards:

   - Turn on or restart the tablet, and then quickly hold down the volume up button; then select **f9**.

     - or -

     Turn on or restart the tablet, and then quickly hold down the volume down button; then select **f9**.

     - or -

     Turn on or restart the tablet, and then quickly hold down the Windows button; then select **f9**.
3. Select the optical drive or USB flash drive from which you want to boot.
4. Follow the on-screen instructions.

Removing the HP Recovery partition (select products only)

HP Recovery Manager software allows you to remove the HP Recovery partition to free up hard drive space.

IMPORTANT: After you remove the HP Recovery partition, you will not be able to perform System Recovery or create HP recovery media from the HP Recovery partition. So before you remove the Recovery partition, create HP Recovery media; see Creating HP Recovery media (select products only) on page 122.

NOTE: The Remove Recovery Partition option is only available on products that support this function.

Follow these steps to remove the HP Recovery partition:

1. Type `recovery` in the taskbar search box, and then select **HP Recovery Manager**.
2. Select **Remove Recovery Partition**, and then follow the on-screen instructions.

Backing up, restoring, and recovering in Windows 7

Your computer includes HP and Windows tools to help you safeguard your information and retrieve it if you ever need to. These tools will help you return your computer to a proper working state, all with simple steps. This section provides information about the following processes:

- Creating recovery media and backups
- Restoring and recovering your system

Creating recovery media and backups

Recovery after a system failure is only as good as your most recent backup.

1. After you successfully set up the computer, create HP Recovery media. This step creates a Windows 7 operating system DVD and a *Driver Recovery* DVD. The Windows DVD can be used to reinstall the original operating system in cases where the hard drive is corrupted or has been replaced. The *Driver Recovery* DVD installs specific drivers and applications. See Creating recovery media with HP Recovery Disc Creator on page 128.
2. Use Windows Backup and Recovery tools to perform the following:
   - Back up individual files and folders
   - Back up your entire hard drive (select products only)
   - Create system repair discs (select products only) with the installed optical drive (select products only) or an optional external optical drive
   - Create system restore points

NOTE: This guide describes an overview of backing up, restoring, and recovering options. For more details about the tools provided, see Help and Support. To access Help and Support, select **Start**, and then select **Help and Support**.

NOTE: HP recommends that you print the recovery procedures and save them for later use, in case of system instability.

In case of system failure, you can use the backup files to restore the contents of your computer. See Backing up your information on page 128.

Guidelines

- When creating recovery media or backing up to discs, use any of the following types of discs (purchased separately): DVD+R, DVD+R DL, DVD-R, DVD-R DL, or DVD±RW. The discs you use will depend on the type of optical drive you are using.
- Be sure that the computer is connected to AC power before you start the recovery media creation process or the backup process.

Creating recovery media with HP Recovery Disc Creator

HP Recovery Disc Creator is a software program that offers an alternative way to create recovery media. After you successfully set up the computer, you can create recovery media using HP Recovery Disc Creator. This recovery media allows you to reinstall your original operating system as well as select drivers and applications if the hard drive becomes corrupted. HP Recovery Disc Creator can create two kinds of recovery DVDs:

- Windows 7 operating system DVD—Installs the operating system without additional drivers or applications.
- *Driver Recovery* DVD—Installs specific drivers and applications only, in the same way that the HP Software Setup utility installs drivers and applications.

Creating recovery media

NOTE: The Windows 7 operating system DVD can be created only once. Thereafter, the option to create that media will not be available after you create a Windows DVD.

To create the Windows DVD:

1. Select **Start**, select **All Programs**, select **Productivity and Tools**, and then select **HP Recovery Disc Creator**.
2. Select **Windows disk**.
3. From the drop-down menu, select the drive for burning the recovery media.
4. Click the **Create** button to start the burning process.

After the Windows 7 operating system DVD has been created, create the *Driver Recovery* DVD:

1. Select **Start**, select **All Programs**, select **Productivity and Tools**, and then select **HP Recovery Disc Creator**.
2. Select **Driver disk**.
3. From the drop-down menu, select the drive for burning the recovery media.
4. Click the **Create** button to start the burning process.

Backing up your information

You should create system repair media and your initial backup immediately after initial system setup. As you add new software and data files, you should continue to back up your system on a regular basis to maintain a reasonably current backup. You should also create Windows system repair media (select products only) which can be used to start up (boot) the computer and repair the operating system in case of system instability or failure. Your initial and subsequent backups allow you to restore your data and settings if a failure occurs.

You can back up your information to an optional external hard drive, a network drive, or discs.

Note the following when backing up:

- Store personal files in the Documents library, and back it up regularly.
- Back up templates that are stored in their associated directories.
- Save customized settings that appear in a window, toolbar, or menu bar by taking a screen shot of your settings. The screen shot can be a time-saver if you have to reset your preferences.
- When backing up to discs, number each disc after removing it from the drive.

NOTE: For detailed instructions on various backup and restore options, perform a search for these topics in Help and Support. To access Help and Support, select **Start**, and then select **Help and Support**.

NOTE: Windows includes the User Account Control feature to improve the security of your computer. You may be prompted for your permission or password for tasks such as installing software, running utilities, or changing Windows settings. Refer to Help and Support. To access Help and Support, select **Start**, and then select **Help and Support**.

To create a backup using Windows Backup and Restore:

NOTE: The backup process may take over an hour, depending on file size and the speed of the computer.

1. Select **Start**, select **All Programs**, select **Maintenance**, and then select **Backup and Restore**.
2. Follow the on-screen instructions to set up your backup, create a system image (select products only), or create system repair media (select products only).

Performing a system recovery

In case of system failure or instability, the computer provides the following tools to recover your files:

- Windows recovery tools: You can use Windows Backup and Restore to recover information you have previously backed up. You can also use Windows Startup Repair to fix problems that might prevent Windows from starting correctly.
- f11 recovery tools (select products only): You can use the f11 recovery tools to recover your original hard drive image. The image includes the Windows operating system and software programs installed at the factory.

NOTE: If you are unable to boot (start up) your computer and you cannot use the system repair media you previously created (select products only), you must purchase Windows 7 operating system media to reboot the computer and repair the operating system. For additional information, see Using Windows 7 operating system media on page 131.

Using the Windows recovery tools

Using the Windows recovery tools, you can:

- Recover individual files
- Restore the computer to a previous system restore point
- Recover information using recovery tools

NOTE: For detailed instructions on various recovery and restore options, perform a search for these topics in Help and Support. To access Help and Support, select **Start**, and then select **Help and Support**.

NOTE: Windows includes the User Account Control feature to improve the security of your computer. You may be prompted for your permission or password for tasks such as installing software, running utilities, or changing Windows settings. Refer to Help and Support. To access Help and Support, select **Start**, and then select **Help and Support**.

To recover information you previously backed up:

1. Select **Start**, select **All Programs**, select **Maintenance**, and then select **Backup and Restore**.
2. Follow the on-screen instructions to recover your system settings, your computer (select products only), or your files.

To recover your information using Startup Repair, follow these steps:

CAUTION: Some Startup Repair options will completely erase and reformat the hard drive. All files you have created and any software installed on the computer are permanently removed. When reformatting is complete, the recovery process restores the operating system, as well as the drivers, software, and utilities from the backup used for recovery.

1. If possible, back up all personal files.
2. If possible, check for the presence of the Windows partition.

   To check for the Windows partition, select **Start**, and then select **Computer**.

   NOTE: If the Windows partition is not listed, you must recover your operating system and programs using the Windows 7 operating system DVD and the *Driver Recovery* media. For additional information, see Using Windows 7 operating system media on page 131.
3. If the Windows partition is listed, restart the computer, and then press f8 before the Windows operating system loads.
4. Select **Startup Repair**.
5. Follow the on-screen instructions.

NOTE: For additional information on recovering information using the Windows tools, select **Start**, and then select **Help and Support**.

Using f11 recovery tools (select products only)

CAUTION: Using f11 completely erases hard drive contents and reformats the hard drive. All files that you have created and any software that you have installed on the computer are permanently removed. The f11 recovery tool reinstalls the operating system and HP programs and drivers that were installed at the factory. Software not installed at the factory must be reinstalled.

To recover the original hard drive image using f11:

1. If possible, back up all personal files.
2. If possible, check for the presence of the HP Recovery partition: click **Start**, right-click **Computer**, click **Manage**, and then click **Disk Management**.

   NOTE: If the HP Recovery partition is not listed, you must recover your operating system and programs using the Windows 7 operating system media and the *Driver Recovery* media. For additional information, see Using Windows 7 operating system media on page 131.
3. If the HP Recovery partition is listed, restart the computer, and then press f11 before the Windows operating system loads.
4. Follow the on-screen instructions.

Using Windows 7 operating system media

If you cannot use the recovery media you previously created using the HP Recovery Disc Creator (select products only), you must purchase a Windows 7 operating system DVD to reboot the computer and repair the operating system.

To order a Windows 7 operating system DVD, go to the HP website. For U.S. support, go to http://www.hp.com/support. For worldwide support, go to http://welcome.hp.com/country/us/en/wwcontact_us.html. You can also order the DVD by calling support. For contact information, see the *Worldwide Telephone Numbers* booklet included with the computer.

CAUTION: Using a Windows 7 operating system DVD completely erases hard drive contents and reformats the hard drive. All files that you have created and any software that you have installed on the computer are permanently removed. When reformatting is complete, the recovery process helps you restore the operating system, as well as drivers, software, and utilities.

To initiate recovery using a Windows 7 operating system DVD:

NOTE: This process takes several minutes.

1. If possible, back up all personal files.
2. Restart the computer, and then insert the Windows 7 operating system DVD into the optical drive before the Windows operating system loads.
3. When prompted, press any keyboard key.
4. Follow the on-screen instructions.
5. Click **Next**.
6. Select **Repair your computer**.
7. Follow the on-screen instructions.

After the repair is completed:

1. Eject the Windows 7 operating system DVD and then insert the *Driver Recovery* DVD.
2. Install the Hardware Enabling Drivers first, and then install Recommended Applications.

A Battery replacement

The battery installed on the computer provides power to the real-time clock. When replacing the battery, use a battery equivalent to the battery originally installed on the computer. The computer has a 3-volt lithium coin cell battery installed.

⚠ **WARNING!** The computer contains an internal lithium manganese dioxide battery. There is a risk of fire and burns if the battery is not handled properly. To reduce the risk of personal injury:

Do not attempt to recharge the battery.

Do not expose to temperatures higher than 60°C (140ºF).

Do not disassemble, crush, puncture, short external contacts, or dispose of in fire or water.

Replace the battery only with the HP spare designated for this product.

⚠ **CAUTION:** Before replacing the battery, it is important to back up the computer CMOS settings. When the battery is removed or replaced, the CMOS settings will be cleared.

Static electricity can damage the electronic components of the computer or optional equipment. Before beginning these procedures, ensure that you are discharged of static electricity by briefly touching a grounded metal object.

NOTE: The lifetime of the lithium battery can be extended by plugging the computer into a live AC wall socket. The lithium battery is only used when the computer is NOT connected to AC power.

HP encourages customers to recycle used electronic hardware, HP original print cartridges, and rechargeable batteries. For more information about recycling programs, go to http://www.hp.com/recycle.

1. Remove/disengage any security devices that prohibit opening the computer.
2. Remove all removable media, such as compact discs or USB flash drives, from the computer.
3. Turn off the computer properly through the operating system, then turn off any external devices.
4. Disconnect the power cord from the power outlet and disconnect any external devices.

   ⚠ **CAUTION:** Regardless of the power-on state, voltage is always present on the system board as long as the system is plugged into an active AC outlet. You must disconnect the power cord to avoid damage to the internal components of the computer.

5. Remove the computer access panel.
6. Locate the battery and battery holder on the system board.

   NOTE: On some computer models, it may be necessary to remove an internal component to gain access to the battery.

7. Depending on the type of battery holder on the system board, complete the following instructions to replace the battery.

   Type 1

   a. Lift the battery out of its holder.

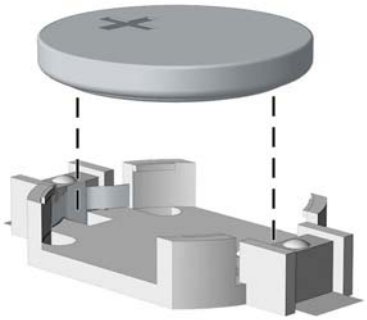

b. Slide the replacement battery into position, positive side up. The battery holder automatically secures the battery in the proper position.

Type 2

a. To release the battery from its holder, squeeze the metal clamp that extends above one edge of the battery. When the battery pops up, lift it out (1).

b. To insert the new battery, slide one edge of the replacement battery under the lip of the holder with the positive side up. Push the other edge down until the clamp snaps over the other edge of the battery (2).

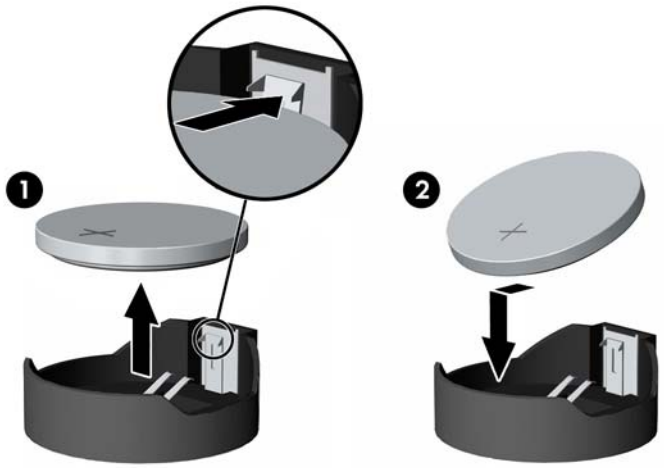

Type 3

a. Pull back on the clip (1) that is holding the battery in place, and remove the battery (2).

b. Insert the new battery and position the clip back into place.

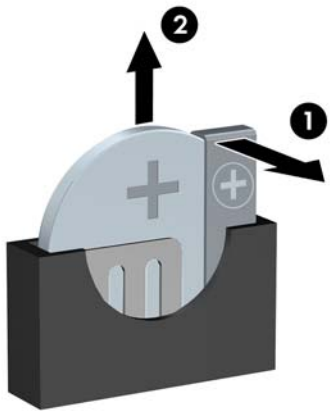

NOTE: After the battery has been replaced, use the following steps to complete this procedure.

8. Replace the computer access panel.
9. Plug in the computer and turn on power to the computer.
10. Reset the date and time, your passwords, and any special system setups using Computer Setup.
11. Lock any security devices that were disengaged when the computer access panel was removed.

B Power Cord Set Requirements

The power supplies on some computers have external power switches. The voltage select switch feature on the computer permits it to operate from any line voltage between 100-120 or 220-240 volts AC. Power supplies on those computers that do not have external power switches are equipped with internal switches that sense the incoming voltage and automatically switch to the proper voltage.

The power cord set received with the computer meets the requirements for use in the country where you purchased the equipment.

Power cord sets for use in other countries must meet the requirements of the country where you use the computer.

General Requirements

The requirements listed below are applicable to all countries:

1. The power cord must be approved by an acceptable accredited agency responsible for evaluation in the country where the power cord set will be installed.
2. The power cord set must have a minimum current capacity of 10A (7A Japan only) and a nominal voltage rating of 125 or 250 volts AC, as required by each country's power system.
3. The diameter of the wire must be a minimum of 0.75 mm_2 or 18AWG, and the length of the cord must be between 1.8 m (6 feet) and 3.6 m (12 feet).

The power cord should be routed so that it is not likely to be walked on or pinched by items placed upon it or against it. Particular attention should be paid to the plug, electrical outlet, and the point where the cord exits from the product.

⚠ **WARNING!** Do not operate this product with a damaged power cord set. If the power cord set is damaged in any manner, replace it immediately.

Japanese Power Cord Requirements

For use in Japan, use only the power cord received with this product.

⚠ **CAUTION:** Do not use the power cord received with this product on any other products.

Country-Specific Requirements

Additional requirements specific to a country are shown in parentheses and explained below.

Country	Accrediting Agency	Country	Accrediting Agency
Australia (1)	EANSW	Italy (1)	IMQ
Austria (1)	OVE	Japan (3)	METI
Belgium (1)	CEBC	Norway (1)	NEMKO
Canada (2)	CSA	Sweden (1)	SEMKO
Denmark (1)	DEMKO	Switzerland (1)	SEV
Finland (1)	SETI	United Kingdom (1)	BSI
France (1)	UTE	United States (2)	UL
Germany (1)	VDE		

1. The flexible cord must be Type HO5VV-F, 3-conductor, 0.75mm_2 conductor size. Power cord set fittings (appliance coupler and wall plug) must bear the certification mark of the agency responsible for evaluation in the country where it will be used.
2. The flexible cord must be Type SVT or equivalent, No. 18 AWG, 3-conductor. The wall plug must be a two-pole grounding type with a NEMA 5-15P (15A, 125V) or NEMA 6-15P (15A, 250V) configuration.
3. Appliance coupler, flexible cord, and wall plug must bear a “T” mark and registration number in accordance with the Japanese Dentori Law. Flexible cord must be Type VCT or VCTF, 3-conductor, 0.75 mm_2 conductor size. Wall plug must be a two-pole grounding type with a Japanese Industrial Standard C8303 (7A, 125V) configuration.

C Statement of memory volatility

The purpose of this chapter is to provide general information regarding nonvolatile memory in HP Business computers. This chapter also provides general instructions for restoring nonvolatile memory that can contain personal data after the system has been powered off and the hard drive has been removed.

HP Business computer products that use Intel®-based or AMD®-based system boards contain volatile DDR memory. The amount of nonvolatile memory present in the system depends upon the system configuration. Intel-based and AMD-based system boards contain nonvolatile memory subcomponents as originally shipped from HP, assuming that no subsequent modifications have been made to the system and assuming that no applications, features, or functionality have been added to or installed on the system.

Following system shutdown and removal of all power sources from an HP Business computer system, personal data can remain on volatile system memory (DIMMs) for a finite period of time and will also remain in nonvolatile memory. Use the steps below to remove personal data from the computer, including the nonvolatile memory found in Intel-based and AMD-based system boards.

NOTE: If your tablet has a keyboard base, connect to the keyboard base before beginning steps in this chapter.

Current BIOS steps

1. Follow steps (a) through (l) below to restore the nonvolatile memory that can contain personal data. Restoring or reprogramming nonvolatile memory that does not store personal data is neither necessary nor recommended.

   a. Turn on or restart the computer, and then press esc while the “Press the ESC key for Startup Menu” message is displayed at the bottom of the screen.

   NOTE: If the system has a BIOS administrator password, enter the password at the prompt.

   b. Select **Main**, select **Apply Factory Defaults and Exit**, and then select **Yes** to load defaults.

   The computer will reboot.

   c. During the reboot, press esc while the “Press the ESC key for Startup Menu” message is displayed at the bottom of the screen.

   NOTE: If the system has a BIOS administrator password, enter the password at the prompt.

   d. Select the **Security** menu, select **Restore Security Settings to Factory Defaults**, and then select **Yes** to restore security level defaults.

   The computer will reboot.

   e. During the reboot, press esc while the “Press the ESC key for Startup Menu” message is displayed at the bottom of the screen.

   NOTE: If the system has a BIOS administrator password, enter the password at the prompt.

   f. If an asset or ownership tag is set, select the **Security** menu and scroll down to the **Utilities** menu. Select **System IDs**, and then select **Asset Tracking Number**. Clear the tag, and then make the selection to return to the prior menu.

g. If a DriveLock password is set, select the **Security** menu, and scroll down to **Hard Drive Utilities** under the **Utilities** menu. Select **Hard Drive Utilities**, select **DriveLock**, then uncheck the checkbox for **DriveLock password on restart**. Select **OK** to proceed.

h. Select the **Main** menu, and then select **Reset BIOS Security to factory default**. Click **Yes** at the warning message.

   The computer will reboot.

i. During the reboot, press esc while the “Press the ESC key for Startup Menu” message is displayed at the bottom of the screen.

NOTE: If the system has a BIOS administrator password, enter the password at the prompt.

j. Select the **Main** menu, select **Apply Factory Defaults and Exit**, select **Yes** to save changes and exit, and then select **Shutdown**.

k. Reboot the system. If the system has a Trusted Platform Module (TPM) and/or fingerprint reader, one or two prompts will appear—one to clear the TPM and the other to Reset Fingerprint Sensor; press or tap F1 to accept or F2 to reject.

l. Remove all power and system batteries for at least 24 hours.

2. Complete one of the following:

- Remove and retain the storage drive.

– or –

- Clear the drive contents by using a third party utility designed to erase data from an SSD.

– or –

- Clear the contents of the drive by using the following BIOS Setup Secure Erase command option steps:

IMPORTANT: If you clear data using Secure Erase, it cannot be recovered.

a. Turn on or restart the computer, and then press esc while the “Press the ESC key for Startup Menu” message is displayed at the bottom of the screen.

b. Select the **Security** menu and scroll down to the **Utilities** menu.

c. Select **Hard Drive Utilities**.

d. Under **Utilities**, select **Secure Erase**, select the hard drive storing the data you want to clear, and then follow the on-screen instructions to continue.

Nonvolatile memory usage

Nonvolatile Memory Type	Amount (Size)	Does this memory store customer data?	Does this memory retain data when power is removed?	What is the purpose of this memory?	How is data input into this memory?	How is this memory write-protected?
HP Sure Start flash (select models only)	8 MBytes	No	Yes	Provides protected backup of critical System BIOS code, EC firmware, and critical computer configuration data for select platforms that support HP Sure Start. For more information, see Using HP Sure Start (select models only) on page 142.	Data cannot be written to this device via the host processor. The content is managed solely by the HP Sure Start Embedded Controller.	This memory is protected by the HP Sure Start Embedded Controller.
Real Time Clock (RTC) battery backed-up CMOS configuration memory	256 Bytes	No	Yes	Stores system date and time and noncritical data.	RTC battery backed-up CMOS is programmed using the Computer Setup (BIOS), or changing the Microsoft Windows date & time.	This memory is not write-protected.
Controller (NIC) EEPROM	64 KBytes (not customer accessible)	No	Yes	Stores NIC configuration and NIC firmware.	NIC EEPROM is programmed using a utility from the NIC vendor that can be run from DOS.	A utility is required to write data to this memory and is available from the NIC vendor. Writing data to this ROM in an inappropriate manner will render the NIC non-functional.
DIMM Serial Presence Detect (SPD) configuration data	256 Bytes per memory module, 128 Bytes programmable (not customer accessible)	No	Yes	Stores memory module information.	DIMM SPD is programmed by the memory vendor.	Data cannot be written to this memory when the module is installed in a computer. The specific write-protection method varies by memory vendor.
System BIOS	9 MBytes	Yes	Yes	Stores system BIOS code and computer configuration data.	System BIOS code is programmed at the factory. Code is updated when the system BIOS is updated. Configuration data and settings are input using the Computer Setup (BIOS) or a custom utility.	**NOTE:** Writing data to this ROM in an inappropriate manner can render the computer non-functional. A utility is required for writing data to this memory and is available on the HP website; go to http://www.hp.com/support. Select **Find your**

Nonvolatile Memory Type	Amount (Size)	Does this memory store customer data?	Does this memory retain data when power is removed?	What is the purpose of this memory?	How is data input into this memory?	How is this memory write-protected?
						product, and then follow the on-screen instructions.
Intel Management Engine Firmware (present only in select Elite or Z models. For more information, go to http://www.hp.com/support. Select **Find your product**, and then follow the on-screen instructions.)	1.5 MBytes or 7 MBytes	Yes	Yes	Stores Management Engine Code, Settings, Provisioning Data and iAMT third-party data store.	Management Engine Code is programmed at the factory. Code is updated via Intel secure firmware update utility. Unique Provisioning Data can be entered at the factory or by an administrator using the Management Engine (MEBx) setup utility. The third party data store contents can be populated by a remote management console or local applications that have been registered by an administrator to have access to the space.	The Intel chipset is configured to enforce hardware protection to block all direct read/write access to this area. An Intel utility is required for updating the firmware. Only firmware updates digitally signed by Intel can be applied using this utility.
Bluetooth flash (select products only)	2 Mbit	No	Yes	Stores Bluetooth configuration and firmware.	Bluetooth flash is programmed at the factory. Tools for writing data to this memory are not publicly available but can be obtained from the silicon vendor.	A utility is required for writing data to this memory and is made available through newer versions of the driver whenever the flash requires an upgrade.
802.11 WLAN EEPROM	4 Kbit to 8 Kbit	No	Yes	Stores configuration and calibration data.	802.11 WLAN EEPROM is programmed at the factory. Tools for writing data to this memory are not made public.	A utility is required for writing data to this memory and is typically not made available to the public unless a firmware upgrade is necessary to address a unique issue.
Webcam (select products only)	64 Kbit	No	Yes	Stores webcam configuration and firmware.	Webcam memory is programmed using a utility from the device manufacturer that can be run from Windows.	A utility is required for writing data to this memory and is typically not made available to the public unless a firmware upgrade is necessary to address a unique issue.
Fingerprint reader (select products only)	512 KByte flash	Yes	Yes	Stores fingerprint templates.	Fingerprint reader memory is programmed by user enrollment in HP ProtectTools Security Manager.	Only a digitally signed application can make the call to write to the flash.

Questions and answers

1. **How can the BIOS settings be restored (returned to factory settings)?**

   IMPORTANT: Restore defaults does not securely erase any data on your hard drive. See question and answer 6 for steps to securely erase data.

   Restore defaults does not reset the Custom Secure Boot keys. See question and answer 7 for information about resetting the keys.

   a. Turn on or restart the computer, and then press esc while the “Press the ESC key for Startup Menu” message is displayed at the bottom of the screen.

   b. Select **Main**, and then select **Apply Factory Defaults and Exit**.

   c. Follow the on-screen instructions.

   d. Select **Main**, select **Save Changes and Exit**, and then follow the on-screen instructions.

2. **What is a UEFI BIOS, and how is it different from a legacy BIOS?**

   The Unified Extensible Firmware Interface (UEFI) BIOS is an industry-standard software interface between the platform firmware and an operating system (OS). It is a replacement for the older BIOS architecture, but supports much of the legacy BIOS functionality.

   Like the legacy BIOS, the UEFI BIOS provides an interface to display the system information and configuration settings and to change the configuration of your computer before an OS is loaded. BIOS provides a secure run-time environment that supports a Graphic User Interface (GUI). In this environment, you can use either a pointing device (Touchscreen, TouchPad, pointing stick, or USB mouse) or the keyboard to navigate and make menu and configuration selections. The UEFI BIOS also contains basic system diagnostics.

   The UEFI BIOS provides functionality beyond that of the legacy BIOS. In addition, the UEFI BIOS works to initialize the computer’s hardware before loading and executing the OS; the run-time environment allows the loading and execution of software programs from storage devices to provide more functionality, such as advanced hardware diagnostics (with the ability to display more detailed system information) and advanced firmware management and recovery software.

   HP has provided options in Computer Setup (BIOS) to allow you to run in legacy BIOS, if required by the operating system. Examples of this requirement would be if you upgrade or downgrade the OS.

3. **Where does the UEFI BIOS reside?**

   The UEFI BIOS resides on a flash memory chip. A utility is required to write to the chip.

4. **What kind of configuration data is stored on the DIMM Serial Presence Detect (SPD) memory module? How would this data be written?**

   The DIMM SPD memory contains information about the memory module, such as size, serial number, data width, speed/timing, voltage, and thermal information. This information is written by the module manufacturer and stored on an EEPROM. This EEPROM cannot be written to when the memory module is installed in a computer. Third-party tools do exist that can write to the EEPROM when the memory module is not installed in a computer. Various third-party tools are available to read SPD memory.

5. **What is meant by “Restore the nonvolatile memory found in Intel-based system boards”?**

   This message relates to clearing the Real Time Clock (RTC) CMOS memory that contains computer configuration data.

6. **How can the BIOS security be reset to factory defaults and data erased?**

IMPORTANT: Resetting will result in the loss of information.

These steps will not reset Custom Secure Boot Keys. See question and answer 7 for information about resetting the keys.

a. Turn on or restart the computer, and then press esc while the “Press the ESC key for Startup Menu” message is displayed at the bottom of the screen.

b. Select **Main**, and then select **Reset Security to Factory Defaults**.

c. Follow the on-screen instructions.

d. Select **Main**, select **Save Changes and Exit**, and then follow the on-screen instructions.

7. **How can the Custom Secure Boot Keys be reset?**

Secure Boot is a feature to ensure that only authenticated code can start on a platform. If you enabled Secure Boot and created Custom Secure Boot Keys, simply disabling Secure Boot will not clear the keys. You must also select to clear the Custom Secure Boot Keys. Use the same Secure Boot access procedure you used to create the Custom Secure Boot Keys, but make the selection to clear or delete all Secure Boot Keys.

a. Turn on or restart the computer, and then press esc while the “Press the ESC key for Startup Menu” message is displayed at the bottom of the screen.

b. Select the **Security** menu, select **Secure Boot Configuration**, and then follow the on-screen instructions.

c. At the **Secure Boot Configuration** window, select **Secure Boot**, select **Clear Secure Boot Keys**, and then follow the on-screen instructions to continue.

Using HP Sure Start (select models only)

Select computer models are configured with HP Sure Start, a technology that continuously monitors your computer's BIOS for attacks or corruption. If the BIOS becomes corrupted or is attacked, HP Sure Start restores the BIOS to its previously safe state, without user intervention. Those select computer models ship with HP Sure Start configured and enabled. HP Sure Start is configured and already enabled so that most users can use the HP Sure Start default configuration. The default configuration can be customized by advanced users.

To access the latest documentation on HP Sure Start, go to http://www.hp.com/support. Select **Find your product**, and then follow the on-screen instructions.

D Specifications

SFF Specifications

Table D-1 Specifications

Chassis (in the desktop position)		
Height	3.74 in	95 mm
Width	10.63 in	270 mm
Depth	11.65 in	296 mm
Approximate Weight	9.92 lb	4.5 kg
Weight Supported (maximum distributed load in desktop position)	77 lb	35 kg
Temperature Range		
Operating	50° to 95°F	10° to 35°C
Nonoperating	-22° to 140°F	-30° to 60°C
NOTE: Operating temperature is derated 1.0° C per 300 m (1000 ft) to 3000 m (10,000 ft) above sea level; no direct sustained sunlight. Maximum rate of change is 10° C/Hr. The upper limit may be limited by the type and number of options installed.		
Relative Humidity (noncondensing)		
Operating	10-90%	10-90%
Nonoperating (38.7°C max wet bulb)	5-95%	5-95%
Maximum Altitude (unpressurized)		
Operating	16,404 ft	5000 m
Nonoperating	50,000 ft	15,240 m
Power Supply		
Operating Voltage Range	90-264 VAC	
Rated Voltage Range	100-240 VAC	
Rated Line Frequency	50-60 Hz	
Operating Line Frequency	47-63 Hz	
Standard Efficiency	200W active PFC	
80 PLUS Bronze	200W active PFC; 82/85/82% efficient at 20/50/100% load (115V)	
80 PLUS Platinum	200W active PFC; 90/92/89% efficient at 20/50/100% load (115V) 200W active PFC; 91/93/90% efficient at 20/50/100% load (230V)	
Rated Input Current	3.5A/Max	
Current Leakage (NFPA 99)	< 275 µA	

Index

A

access pane
  illustrated 5
access panel
  locked 82
  removal and replacement 21
administrator password 117
air duct
  illustrated 7
  removal and replacement 47
antennas
  disconnecting 46
  removal and replacement 54
audible codes 115
audio problems 93

B

backup and recovery, Windows 7 127
Backup and Restore 129
backups
  creating 128
  recovering 129
battery
  disposal 17
battery replacement 132
beep codes 115
BIOS
  clearing and resetting 119
boot order
  changing 126
booting options
  Full Boot 110
  Quick Boot 110

C

cable management 19
cable pinouts, SATA data 18
card reader
  illustrated 7
  removal and replacement 60
cautions
  AC power 12
  cables 17
  cooling fan 16
  electrostatic discharge 12
  keyboard cleaning 15
  keyboard keys 16
CD-ROM or DVD problems 103
cleaning
  computer 15
  mouse 16
  safety precautions 15
CMOS
  backing up 117
computer
  specifications 143
computer cleaning 15
Computer Setup
  access problem 81
country power cord set requirements 136
Customer Support 79

D

disassembly preparation 20
Driver Recovery DVD,
  creating 128
  using for restore 131
drives
  cable connections 32
  installation 32
  locations 32
dust filter 23

E

electrostatic discharge (ESD) 12
  preventing damage 13
error
  codes 110, 115
  messages 110
expansion card
  installation 28
  removal 28

F

F10 Setup
  access problem 81
f11 recovery 130
fan sink
  illustrated 5
fan, power supply 16
flash drive problems 105
flashing LEDs 115
front bezel
  illustrated 5
  removal and replacement 21
  removing blanks 22
front panel components 2
front panel problems 107

G

general problems 81
grounding methods 13

H

hard drive
  proper handling 17
  SATA characteristics 18
hard drive (2.5-inch)
  installation 43
  removal 42
hard drive (3.5-inch)
  installation 38
  removal 35
hard drive cage
  rotating 41
hard drive problems 86
hard drive recovery 130
hard drives
  sizes 10
hardware installation problems 98
heat sink
  removal and replacement 51, 53
helpful hints 80
hood lock
  illustrated 7
  removal and replacement 58
hood sensor
  removal and replacement 59
HP PC Hardware Diagnostics (UEFI)
  using 120
HP Recovery Disc Creator, using 128

HP Recovery Manager
correcting boot problems 126
starting 125
HP Recovery media
creating 122
recovery 125
HP Recovery partition
checking for presence 130
recovery 125
removing 127
using for recovery 130
HP Sure Start 142

I
installing
2.5-inch hard drive 43
battery 132
drive cables 32
dust filter 23
expansion card 28
M.2 SSD card 44
memory 25
secondary 3.5-inch hard drive 38
slim optical drive 34
Internet access problems 107

K
keyboard
cleaning 15
keyboard problems 96

M
M.2 SSD card
installation 44
removal 44
media card reader
problems 88
memory
installation 25
nonvolatile 137
problems 102
socket population 25
volatile 137
memory modules
illustrated 6
minimized image recovery 125
minimized image, creating 124
monitor problems 89
mouse
cleaning 16
problems 96

N
network problems 99
nonvolatile memory 137
numeric error codes 110

O
operating guidelines 14
optical drive
installation 34
options 11
problems 103
removal 33
optical drive bezel
illustrated 7
optical drive latch
illustrated 7
option board, HDMI
illustrated 7
option port board
removal and replacement 57
original system recovery 124
overheating, prevention 14

P
password
administrator 117
clearing 117
power-on 117
POST error messages 110
power cord set requirements
country specific 136
power problems 85
power supply
fan 16
illustrated 5
operating voltage range 143
removal and replacement 49
power-on password 117
printer port
illustrated 10
printer problems 95
problems
audio 93
CD-ROM or DVD 103
Computer Setup 81
F10 Setup 81
flash drive 105
front panel 107
general 81
hard drive 86
hardware installation 98
Internet access 107
keyboard 96
Media Card Reader 88
memory 102
monitor 89
mouse 96
network 99
power 85
printer 95
software 109
product ID location 4

R
rear panel components 3
recover
options 124
recovery
discs 123, 125
HP Recovery Manager 124
media 125
starting 125
supported discs 123
system 124
USB flash drive 125
using HP Recovery media 123
recovery media
creating 122
creating using HP Recovery Manager 123
recovery media, creating 128
recovery media, using for restore 131
recovery partition 130
removing 127
recovery tools, Windows 129
recovery, system 129
removal and replacement
air duct 47
antennas 54
card reader 60
front bezel 21
heat sink 51, 53
hood lock 58
hood sensor 59
option port board 57
power supply 49

speaker 62
system board 64
removing
2.5-inch hard drive 42
battery 132
bezel blanks 22
dust filter 23
expansion card 28
M.2 SSD card 44
secondary 3.5-inch hard drive 35
slim optical drive 33
removing personal data from volatile system memory 137
resetting
CMOS 117
password jumper 117
restoring the hard drive 130
rotating
hard drive cage 41

S
safety and comfort 79
safety precautions
cleaning 15
SATA
connectors on system board 18
data cable pinouts 18
hard drive characteristics 18
SATA data cable
illustrated 9
SATA drive cable
illustrated 9
screws, correct size 17
serial number location 4
serial port, optional
illustrated 7
service considerations 16
software
problems 109
servicing computer 16
solid-state drives
sizes 11
speaker
illustrated 7
removal and replacement 62
specifications
computer 143
Startup Repair, using 129
static electricity 12
supported discs, recovery 123
system board
illustrated 5
removal and replacement 64
SATA connectors 18
system board connections 24
system memory, removing personal data from volatile 137
system recovery 124
system restore point
creating 123
system restore point, creating 122

T
tamper-proof screws
tool 16
temperature control 14
tools, servicing 16
Torx T15 screwdriver 16
tower orientation 66

V
ventilation, proper 14

W
Windows
system restore point 122, 123
Windows 10
backup and restore 122
Windows 7
backup and recovery 127
Windows 7 operating system DVD
creating 128
using for restore 131
Windows 7 operating system media
creating 128
using for restore 131
Windows Startup Repair, using 129
Windows tools
using 123
wireless antennas
disconnecting 46
WLAN module
removal 46
spare part number 46