HP 640 ProBook G3 Notebook PC
HP 650 ProBook G3 Notebook PC

Maintenance and Service Guide
IMPORTANT! This document is intended for HP authorized service providers only.

© Copyright 2016 HP Development Company, L.P.

AMD is a trademark of Advanced Micro Devices, Inc. Bluetooth is a trademark owned by its proprietor and used by HP Inc. under license. Intel is a trademark of Intel Corporation in the U.S. and other countries. Windows is either a registered trademark or trademark of Microsoft Corporation in the United States and/or other countries.

Product notice

This guide describes features that are common to most models. Some features may not be available on your computer.

Not all features are available in all editions of Windows. This computer may require upgraded and/or separately purchased hardware, drivers and/or software to take full advantage of Windows functionality. Windows 10 is automatically updated, which is always enabled. ISP fees may apply and additional requirements may apply over time for updates. See http://www.microsoft.com.

The information contained herein is subject to change without notice. The only warranties for HP products and services are set forth in the express warranty statements accompanying such products and services. Nothing herein should be construed as constituting an additional warranty. HP shall not be liable for technical or editorial errors or omissions contained herein.

First Edition: December 2016

Document Part Number: 912636-001

Safety warning notice

⚠ **WARNING!** To reduce the possibility of heat-related injuries or of overheating the device, do not place the device directly on your lap or obstruct the device air vents. Use the device only on a hard, flat surface. Do not allow another hard surface, such as an adjoining optional printer, or a soft surface, such as pillows or rugs or clothing, to block airflow. Also, do not allow the AC adapter to contact the skin or a soft surface, such as pillows or rugs or clothing, during operation. The device and the AC adapter comply with the user-accessible surface temperature limits defined by the International Standard for Safety of Information Technology Equipment (IEC 60950-1).

Table of contents

1 Product description 1

2 External component identification 7

Right 7

Left 9

Display 10

Top 11

TouchPad 11

Lights 12

Buttons, speakers, and fingerprint reader 13

Keys 15

Using the hot keys 17

Bottom 18

Front 19

Rear 20

Locating system information 20

3 Illustrated parts catalog 22

Computer major components 22

Display assembly subcomponents 27

Mass storage devices 29

Miscellaneous parts 30

4 Removal and replacement procedures preliminary requirements 32

Tools required 32

Service considerations 32

Plastic parts 32

Cables and connectors 33

Drive handling 33

Grounding guidelines 34

Electrostatic discharge damage 34

Packaging and transporting guidelines 35

Workstation guidelines 35

Equipment guidelines 36

5 Removal and replacement procedures for Authorized Service Provider parts 37
Component replacement procedures 37
Service door 37
Battery 38
Hard drive 39
Solid-state drive (select products only) 41
WWAN module (select products only) 42
WLAN module 43
Optical drive 45
Keyboard 47
Memory 50
Hinge cover 53
Base enclosure 55
System board 57
Fan and heat sink assembly 59
Optical drive board 62
Top cover and TouchPad 63
RTC battery 66
Speaker 68
Power button board 69
Fingerprint reader (select products only) 70
Smart card reader 72
Near Field Communication module 74
Audio board 76
Serial board 78
Display assembly 80

6 Computer Setup (BIOS), TPM, and HP Sure Start 86
Using Computer Setup 86
Starting Computer Setup 86
Using a USB keyboard or USB mouse to start Computer Setup (BIOS) 86
Navigating and selecting in Computer Setup 86
Restoring factory settings in Computer Setup 87
Updating the BIOS 87
Determining the BIOS version 87
Downloading a BIOS update 88
Changing the boot order using the f9 prompt 89
TPM BIOS settings (select products only) 89
Using HP Sure Start (select products only) 89

7 Using HP PC Hardware Diagnostics (UEFI) 90
Downloading HP PC Hardware Diagnostics (UEFI) to a USB device 90

8 Backing up, restoring, and recovering 92
Creating recovery media and backups 92
Creating HP Recovery media (select products only) 92
Using Windows tools 93
Restore and recovery 94
Recovering using HP Recovery Manager 94
What you need to know before you get started 94
Using the HP Recovery partition (select products only) 95
Using HP Recovery media to recover 95
Changing the computer boot order 96
Removing the HP Recovery partition (select products only) 97

9 Specifications 98
Computer specifications 98
35.56 cm (14-in) display specifications 100
39.62 cm (15.6-in) display specifications 103
Hard drive specifications 104
Solid-state drive specifications 107

10 Power cord set requirements 110
Requirements for all countries 110
Requirements for specific countries and regions 110

11 Statement of memory volatility 112
Nonvolatile memory usage 114
Questions and answers 116
Using HP Sure Start (select models only) 117

12 Recycling 118

Index 119

1 Product description

Category	Description
Product Name	HP 640 ProBook G3 Notebook PC HP 650 ProBook G3 Notebook PC
Processors	**7th Generation Intel® Core™ i3 Processor, Kabylake U, dual-core, BGA:** i3-7100U (Kit processor) **7th Generation Intel® Core™ i5 Processor, Kabylake U, dual-core, BGA:** i5-7200U (Kit processor) i5-7300U (Roadmap processor) **7th Generation Intel® Core™ i7 Processor, Kabylake U, dual-core, BGA:** i7-7600U (Roadmap processor) **7th Generation Intel® Core i5 Processor, Kabylake H, Quad Core, BGA ULT: (select products only)** i5-7440HQ (Roadmap processor) 45w/35w cTDP (select products only) **7th Generation Intel® Core i7 Processor, Kabylake H, Quad Core, BGA ULT: (select products only)** i7-7820HQ (Roadmap processor) 45w 45w/35w cTDP (select products only)
Chipset	**Intel Kabylake Chipset**—The chipset is integrated with the processor. Skylake PCH QM175 (select products only)
Graphics	**Intel UMA Graphics (GT2) - with shared video memory** AMD Radeon R7 M465 (128-bit) w/2 GB GDDR5 (128Mb x 32, 1.35V, 5Gbps, Qty 4) Supporting 2 display port and 1 D-sub through docking Supports 3 independent displays when on the Quest 2 dock
Panel	**Anti-glare panels for 14” products:** 14.0" HD AG SVA 45% CG 220 nits eDP 1.2 Slim (1366x768) 14.0" HD AG SVA 45% CG 220 nits eDP 1.2 Slim (1366x768) with camera 14.0" HD AG SVA 45% CG 220 nits eDP 1.2 Slim (1366x768) with WWAN 14.0" HD AG SVA 45% CG 220 nits eDP 1.2 Slim (1366x768) with camera and with WWAN 14.0" FHD AG SVA 60% CG 300 nits eDP 1.2 + PSR slim (1920x1080) 14.0" FHD AG SVA 60% CG 300 nits eDP 1.2 + PSR slim (1920x1080) with camera 14.0" FHD AG SVA 60% CG 300 nits eDP 1.2 + PSR slim (1920x1080) with WWAN 14.0" FHD AG SVA 60% CG 300 nits eDP 1.2 + PSR slim (1920x1080) with camera and WWAN

Category	Description
	14.0" FHD Slim eDP SVA 60% 300 nits (1920 x 1080) Touch with camera and with WWAN
	Chemically Strengthened Soda Lime Glass, GF2-MM - Air-Gap Bonded
	Anti-glare panels for 15" products with LED backlight:
	15.6" HD AG SVA 45% CG 220 nits eDP 1.2 Slim (1366x768)
	S15.6" HD AG SVA 45% CG 220 nits eDP 1.2 Slim (1366x768) with camera
	15.6" HD AG SVA 45% CG 220 nits eDP 1.2 Slim (1366x768) with WWAN
	15.6" HD AG SVA 45% CG 220 nits eDP 1.2 Slim (1366x768) with camera and with WWAN
	15.6" FHD AG SVA 60% CG 300 nits eDP 1.2 + slim (1920x1080)
	15.6" FHD AG SVA 60% CG 300 nits eDP 1.2 + slim (1920x1080) with camera
	15.6" FHD AG SVA 60% CG 300 nits eDP 1.2 + slim (1920x1080) with WWAN
	15.6" FHD AG SVA 60% CG 300 nits eDP 1.2 + slim (1920x1080) with camera and WWAN
	14.0" FHD Slim eDP SVA 60% 300 nits (1920 x 1080) Touch with camera and with WWAN
	Chemically Strengthened Soda Lime Glass, GF2-MM - Air-Gap Bonded
Memory	Two SODIMM slots
	Both slots are customer accessible / upgradeable
	DDR4 PC4 SODIMMS - System supports run rate at 2133—Supports Dual Channel Memory up to 16 GB.
	DDR4 PC4 SODIMMS - System supports run rate at 2400 (select products only)
	4096 MB Total System Memory (4096 MB x 1)
	8192 MB Total System Memory (4096 MB x 2)
	8192 MB Total System Memory (8192 MB x 1)
	12288 MB Total System Memory (8192 MB + 4096 MB)
	16384 MB Total System Memory (8192 MB x 2)
Hard drive	**Supports SATA3, 7mm, 2.5" HDDs:**
	500GB 7200 RPM
	500GB 7200 RPM self-encrypting drive (Opal 2)
	500GB 7200 RPM (FIPS-140-2) (Opal 2)
	1TB 5400 RPM
	500GB 5400 rpm Hybrid
Solid-state drive	**M.2 (2280) Solid State Drive**
	128GB M2 SATA-3 SS Value
	256GB SATA-3 SS TLC (Opal 2)
	512GB PCIe Value
	256GB PCIe Gen3x4 NVMe SS TLC

Category	Description
	360GB PCIe Gen3x4 SS TLC (Intel)
	512GB PCIe Value
	512GB PCIe Gen3x4 NVMe SS TLC
	512GB SATA SS TLC (FIPS)
	512GB PCIe Gen3x4 NVMe SS TLC (Opal 2)
	512GB PCIe Gen3x4 NVMe SS MLC
Optical drive (select products only)	**SATA 9.0mm optical drives:**
	DVD-ROM (defeatured combo)
	DVD+/-RW SuperMulti DL
	Blu-ray WriterSATA
	Supports "No Optical weight saver" option
Audio and video	Microphone (Dual Array) only for products without a webcam
	Microphone (Dual Array) only for products with a webcam
	Camera (720p)
	Supports “no camera” option
	Stereo Speakers (2)
Serial port	**15” products only**
	RS-232 /Serial Port
	Supports "no serial port" option”
Ethernet	Intel I219LM (Jacksonville-LM) 10/100/1000 Ethernet NIC with dash Support - supports roadmap processors
	Intel I219V (Jacksonville-V) 10/100/1000 Ethernet NIC with dash Support - supports kit processors
	The following support HBMA (via UEFI PXE boot and Windows OS): embedded NIC, Quest, HP3005, Ace Plus, Bert, and Ernie
	The following dongles only support S3 wake on LAN: Ace Plus
	S3/S4/S5 wake on LAN
Wireless LAN	**WPAN Bluetooth:**
	BT 4.0 only supported via Realtek Sanji2
	BT 4.2 only supported via Intel Sandy Peak, Windstorm Peak vPro & Winstorm Peak non-vPro
	WLAN:
	WLAN options via Minicard connector:
	Intel Dual band wireless-AC 8265 802.11AC 2x2 WiFi + BT 4.2 Combo Adaptor (vPro) (Windstorm Peak)
	Intel Dual band wireless-AC 8265 802.11AC 2x2 WiFi + BT 4.2 Combo Adaptor (non-vPro) (Windstorm Peak non-vPro)
	Intel Dual band wireless-AC 3168 802.11AC 1x1 WiFi + BT 4.2 Combo Adaptor (non-vPro) (Sandy Peak 1)

Category	Description
	Realtek RTL8723BE-VB 802.11b/g/n 1x1 Wi-Fi + BT4.0 Combo Adapter (Sanji2)
	Intel Dual Band Wireless-AC 7265 D1 802.11 AC 2x2 WiFi + BT 4.2 Combo Adapter (non-vPro) Stone Peak 2 D1
	WLAN Antennas (2) (configured at top of panel on all units)
	Bluetooth Disabled IOPT
	Support "No WLAN/No BT" option
	Support for Miracast
	Support for S3/S4 wake on Wireless LAN (Intel Only.)
	Support for WiFi SAR in BIOS (Intel Card Only.)
	Support for HP Sure Connect
	NFC (select products only)
	Integrated NFC Galapagos NXP NPC100 I2C NCI 10mmx25mm module
	NFC Antenna (configured on NFC SKUs only)
	NFC Cable
	Supports "No NFC" option
Wireless WAN (select products only)	SIM Module (3FF/micro SIM): (user accessible on side of unit)
	WWAN options via connector:
	Foxconn HP lt4120 LTE/EVDO/HSPA+ w/GPS M.2 (Amstel) (WW, except Indonesia, China, India, Japan)
	Huawei HP lt4132, LTE/HSPA+ w/GPS M.2 (Macan) (APJ, LA, EMEA)
	Fibocom HP hs3210 WW HSPA+ w/o GPS (Wrangler 2)
	WWAN Antennas (2) (world wide 5 band, configured at top of panel on all units)
	Supports "No WWAN" option
	Supports WWAN After Market Option (for Europe, Middle East, and Africa only)
External media cards	SD Media Reader slot supports SD, SDHC, and SDXC.
Ports	VGA (Dsub 15 pin) supporting 1920 x 1200 external resolution @ 60Hz
	Hot Plug / Unplug and auto detect
	DisplayPort 1.2
	(1) USB Type C Charging Port
	(2) USB 3.0 Port (1 Charging)
	RJ-45 / Ethernet
	Docking connector
	Headphone / Microphone (Combo jack)
	RS-232 /Serial Port (select products only)
	AC Port (4.5mm)
Docking	Quest 2 dock support

Category	Description
Keyboard/pointing devices	HP Advanced Keyboard Touchpad, Spill-resistant with drain Touchpad, Spill-resistant with drain, DuraKeys and backlit Dual Point, Spill-resistant with drain, DuraKeys and backlit
Power requirements	**Battery:** 3-cell HP Long Life Prismatic 48 WHr (4.21 Ahr) Battery
	AC adapter: 45 Watt Smart nPFC 3 pin RC 4.5mm connector - non slim 45 Watt Smart nPFC 3 pin RC 4.5mm connector - non slim 2 prong 65 Watt Smart nPFC 3 pin RC 4.5mm connector 65 Watt Smart nPFC EM 4.5mm connector 90 Watt Smart PFC 3 pin 4.5mm (select products only)
	Power Cord (localized): 2-wire plug - 1m 3-wire plug - 1.8m 3-wire plug - 1m
Security	Supports Security Lock TPM 2.0 (Infineon; soldered down) Fingerprint Reader (select products only) Integrated Smart Card Reader (Active) Preboot Authentication (Password, Smart Card)
Operating system	**Operating System Version:** Windows 10: Redstone 1 **Preinstalled:** • Win 10 Home 64 • Win 10 Home 64 Single Language • Win 10 Home 64 CPPP • Win 10 Home 64 High-end CPPP • Win 10 Home 64 High-end • Win 10 Home 64 High-end Single Language • Win 10 Home 64 StF MSNA for Higher Education Strategic • Win 10 Pro 64 • Win 10 Pro 64 Shape the Future MSNA High End • Win 10 Pro 64 Shape the Future Standard • Win 10 Pro 64 Shape the Future Strategic

Category	Description
	• FreeDOS 2.0
Serviceability	**End user replaceable parts:** AC adapter

2 External component identification

Right

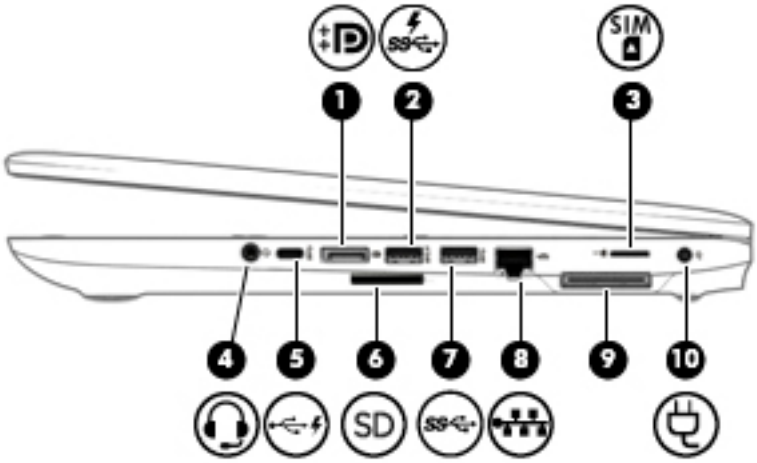

Component		Description
(1)	Dual-Mode DisplayPort	Connects an optional digital display device, such as a high-performance monitor or projector.
(2)	USB 3.x charging port	When the computer is on, connects and charges a USB device, such as a cell phone, camera, activity tracker, or smartwatch, and provides high-speed data transfer.
(3)	Micro SIM card slot (select products only)	Supports a wireless micro subscriber identity module (micro SIM) card.
(4)	Audio-out (headphone)/Audio-in (microphone) combo jack	Connects optional powered stereo speakers, headphones, earbuds, a headset, or a television audio cable. Also connects an optional headset microphone. This jack does not support optional microphone-only devices. **WARNING!** To reduce the risk of personal injury, adjust the volume before putting on headphones, earbuds, or a headset. For additional safety information, refer to the *Regulatory, Safety, and Environmental Notices*. To access this guide: 1. Type `support` in the taskbar search box, and then select the **HP Support Assistant** app. – or – Click the question mark icon in the taskbar. 2. Select **My PC**, select the **Specifications** tab, and then select **User Guides**. **NOTE:** When a device is connected to the jack, the computer speakers are disabled.

Component		Description
(5)	USB Type-C charging port	When the computer is on, connects and charges a USB device that has a Type-C connector, such as a cell phone, camera, activity tracker, or smartwatch, and provides data transfer.
(6)	Memory card reader	Reads optional memory cards that store, manage, share, or access information. To insert a card: 1. Hold the card label-side up, with the connectors facing the computer. 2. Insert the card into the memory card reader, and then press in on the card until it is firmly seated. To remove a card: ▲ Press in on the card, and then remove it from the memory card reader.
(7)	USB 3.x port	Connects a USB device, such as a cell phone, camera, activity tracker, or smartwatch, and provides data transfer.
(8)	RJ-45 (network) jack/status lights	Connects a network cable. • Green (right): The network is connected. • Amber (left): Activity is occurring on the network.
(9)	Docking port	Connects an optional docking device.
(10)	Power connector	Connects an AC adapter.

Left

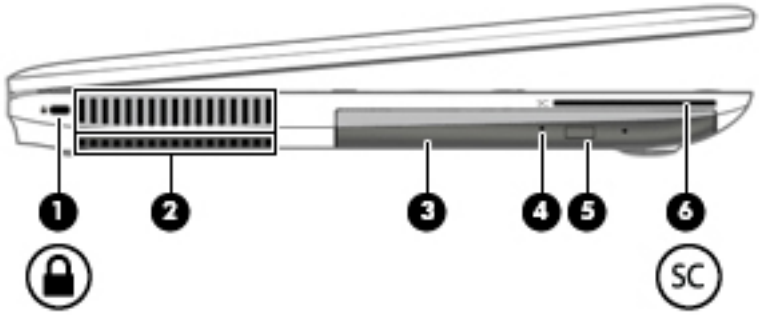

Component		Description
(1)	Security cable slot	Attaches an optional security cable to the computer. **NOTE:** The security cable is designed to act as a deterrent, but it may not prevent the computer from being mishandled or stolen.
(2)	Vent	Enables airflow to cool internal components. **NOTE:** The computer fan starts up automatically to cool internal components and prevent overheating. It is normal for the internal fan to cycle on and off during routine operation.
(3)	Optical drive (select products only)	Depending on your computer model, reads an optical disc or reads and writes to an optical disc.
(4)	Optical drive light (select products only)	On: The optical drive is in use. Off: The optical drive is not in use.
(5)	Optical drive eject button (select products only)	Releases the optical drive disc tray.
(6)	Smart card reader (depending on the configuration)	Supports optional smart cards.

Display

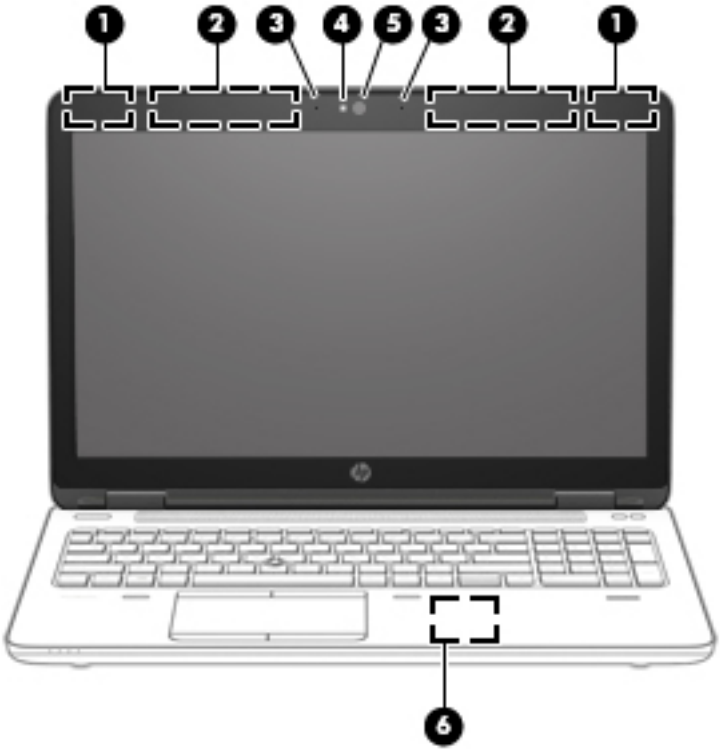

Component		Description
(1)	WLAN antennas*	Send and receive wireless signals to communicate with wireless local area networks (WLANs).
(2)	WWAN antennas*	Send and receive wireless signals to communicate with wireless wide area networks (WWANs).
(3)	Internal microphones	Record sound.
(4)	Webcam light (select products only)	On: The webcam is in use.
(5)	Webcam (select products only)	Records video and captures photographs. Some models allow you to video conference and chat online using streaming video. To use the webcam: ▲ Type `camera` in the taskbar search box, and then select **Camera**.
(6)	Near Field Communication (NFC) tapping area* (select products only)	Tap another NFC-enabled device to the NFC tapping area to transfer files.

*The antennas are not visible from the outside of the computer. For optimal transmission, keep the areas immediately around the antennas free from obstructions.

For wireless regulatory notices, see the section of the *Regulatory, Safety, and Environmental Notices* that applies to your country or region.

To access this guide:

1. Type `support` in the taskbar search box, and then select the **HP Support Assistant** app.

   – or –

   Click the question mark icon in the taskbar.

Component	Description
2. Select **My PC**, select the **Specifications** tab, and then select **User Guides**.	

Top

TouchPad

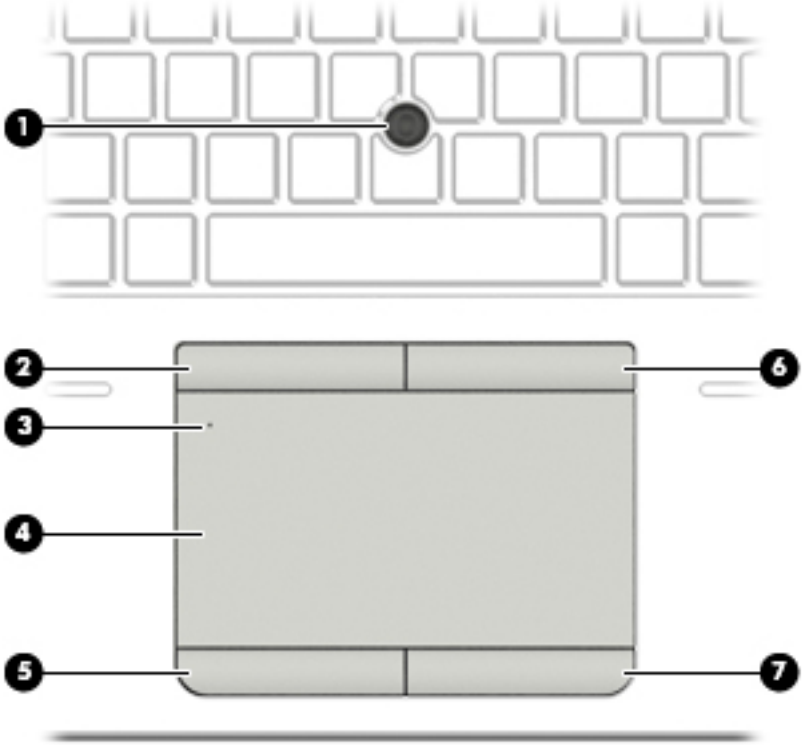

Component		Description
(1)	Pointing stick (select products only)	Moves the pointer and selects or activates items on the screen.
(2)	Left pointing stick button (select products only)	Functions like the left button on an external mouse.
(3)	TouchPad light	• On: The TouchPad is off. • Off: The TouchPad is on.
(4)	TouchPad zone	Reads your finger gestures to move the pointer or activate items on the screen.
(5)	Left TouchPad button	Functions like the left button on an external mouse.
(6)	Right pointing stick button (select products only)	Functions like the right button on an external mouse.
(7)	Right TouchPad button	Functions like the right button on an external mouse.

Lights

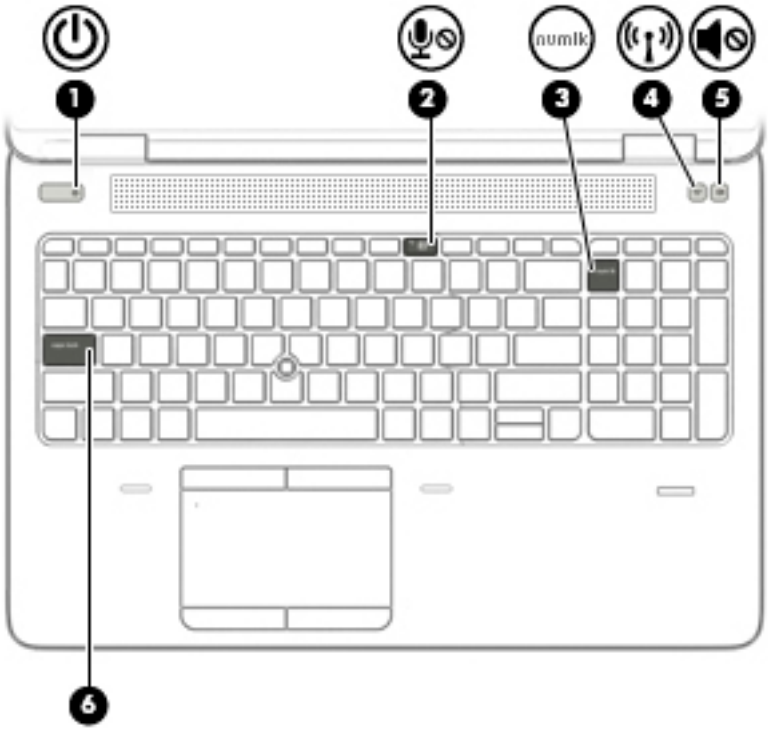

Component			Description
(1)		Power light	• On: The computer is on. • Blinking: The computer is in the Sleep state, a power-saving state. The computer shuts off power to the display and other unneeded components. • Off: The computer is off or in Hibernation. Hibernation is a power-saving state that uses the least amount of power.
(2)		Microphone mute light	• Amber: Microphone sound is off. • Off: Microphone sound is on.
(3)		Num lk light	On: Num lk is on.
(4)		Wireless light	On: An integrated wireless device, such as a wireless local area network (WLAN) device and/or a Bluetooth® device, is on. **NOTE:** On some models, the wireless light is amber when all wireless devices are off.
(5)		Mute light	• Amber: Computer sound is off. • White: Computer sound is on.
(6)		Caps lock light	On: Caps lock is on, which switches the key input to all capital letters.

Buttons, speakers, and fingerprint reader

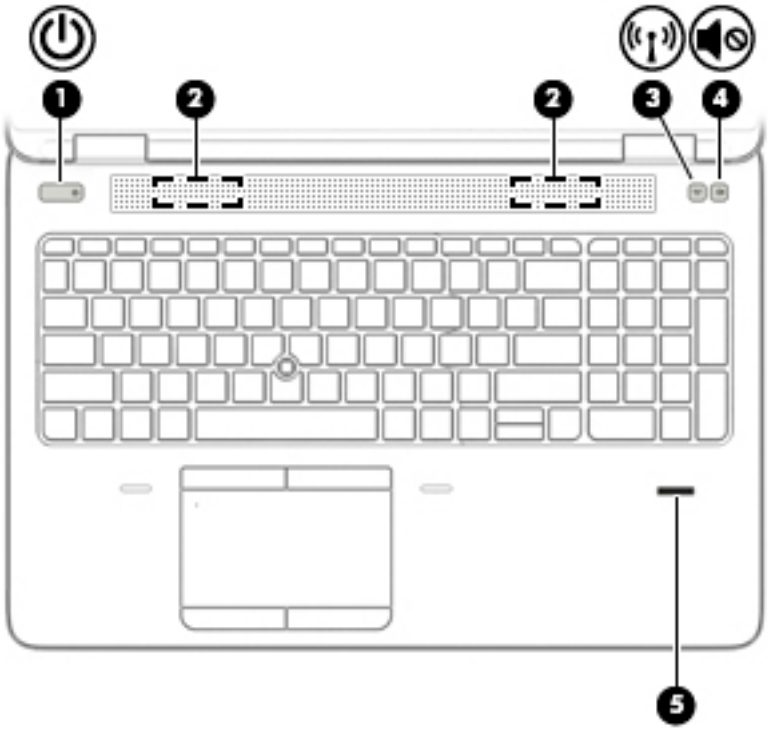

Component		Description
(1)	Power button	• When the computer is off, press the button to turn on the computer. • When the computer is on, press the button briefly to initiate Sleep. • When the computer is in the Sleep state, press the button briefly to exit Sleep. • When the computer is in Hibernation, press the button briefly to exit Hibernation. **CAUTION:** Pressing and holding down the power button results in the loss of unsaved information. If the computer has stopped responding and shutdown procedures are ineffective, press and hold the power button for at least 5 seconds to turn off the computer. To learn more about your power settings, see your power options. ▲ Type `power options` in the taskbar search box, and then select **Power Options**. – or – Right-click the **Power meter** icon, and then select **Power Options**.
(2)	Speakers	Produce sound.

Component		Description
(3)	Wireless button	Turns the wireless feature on or off but does not establish a wireless connection. A wireless network must be set up before a wireless connection is possible.
(4)	Volume mute button	Mutes and restores speaker sound.
(5)	Fingerprint reader (select products only)	Allows a fingerprint logon to Windows®, instead of a password logon.

Keys

NOTE: Refer to the illustration that most closely matches your computer.

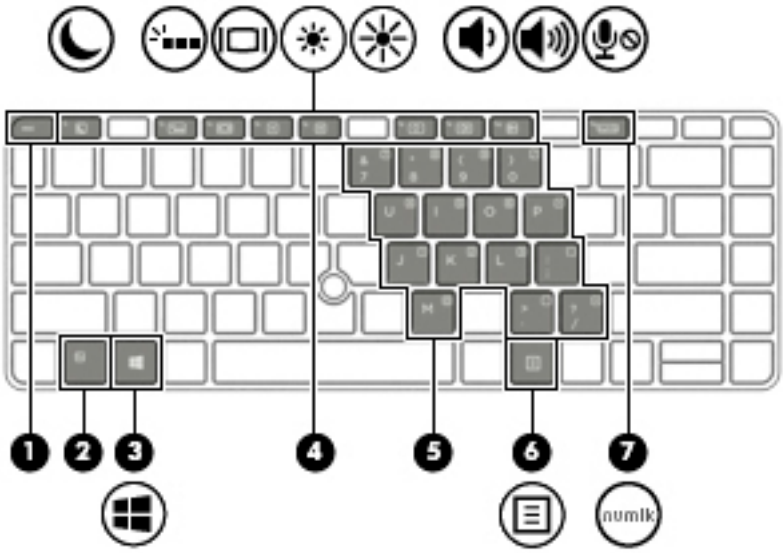

Component			Description
(1)		esc key	Displays system information when pressed in combination with the fn key.
(2)		fn key	Executes frequently used system functions when pressed in combination with a function key, the num lk key, the esc key, or other key. See Using the hot keys on page 17
(3)		Windows key	Opens the **Start** menu. **NOTE:** Pressing the Windows key again will close the **Start** menu.
(4)		Function keys	Execute frequently used system functions in combination with the fn key. See Using the hot keys on page 17.
(5)		Embedded numeric keypad	A numeric keypad superimposed over the keyboard alphabet keys that enables you to add, subtract, and perform other numeric tasks. When num lk is pressed, the keypad can be used like an external numeric keypad. Each key on the keypad performs the function indicated by the icon in the upper-right corner of the key. **NOTE:** If the keypad function is active when the computer is turned off, that function is reinstated when the computer is turned back on.
(6)		Windows application key	Displays options for a selected object.
(7)		num lk key	Turns the embedded numeric keypad on and off.

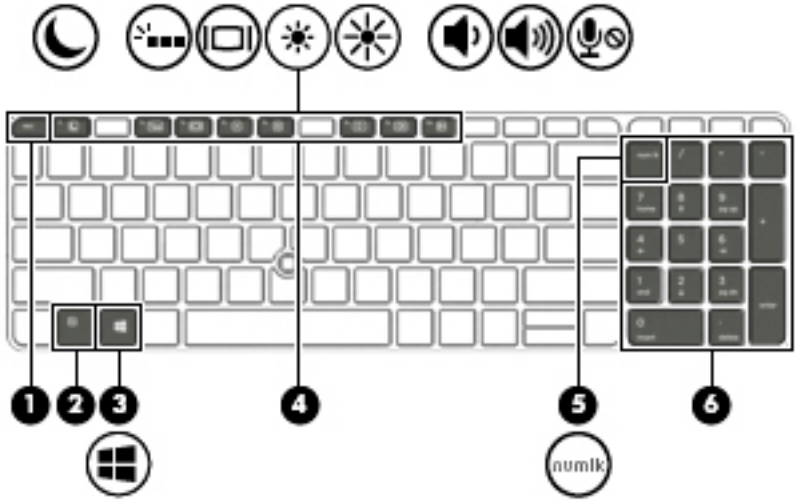

Component		Description
(1)	esc key	Displays system information when pressed in combination with the fn key.
(2)	fn key	Executes frequently used system functions when pressed in combination with a function key, the num lk key, the esc key, or other key. See Using the hot keys on page 17
(3)	Windows key	Opens the **Start** menu. **NOTE:** Pressing the Windows key again will close the **Start** menu.
(4)	Function keys	Execute frequently used system functions in combination with the fn key. See Using the hot keys on page 17.
(5)	num lk key	Alternates between the navigational and numeric functions on the integrated numeric keypad.
(6)	Integrated numeric keypad	A separate keypad to the right of the alphabet keyboard that enables you to add, subtract, and perform other numeric tasks. When num lk is on, the integrated keypad can be used like an external numeric keypad.

Using the hot keys

To use a hot key:

▲ Press the fn key, and then press one of the keys listed in the following table.

Press fn+function key	Description
	Initiates Sleep, which saves your information in system memory. The display and other system components turn off and power is conserved. To exit Sleep, briefly press the power button. **CAUTION:** To reduce the risk of information loss, save your work before initiating Sleep.
	Turns the keyboard backlight off or on. **NOTE:** To conserve battery power, turn off this feature.
	Switches the screen image between display devices connected to the system. For example, if a monitor is connected to the computer, repeatedly pressing this key alternates the screen image from the computer display to the monitor display to a simultaneous display on both the computer and the monitor.
	Decreases the screen brightness incrementally as long as you hold down the key.
	Increases the screen brightness incrementally as long as you hold down the key.
	Decreases speaker volume incrementally while you hold down the key.
	Increases speaker volume incrementally while you hold down the key.
	Mutes the microphone.

Bottom

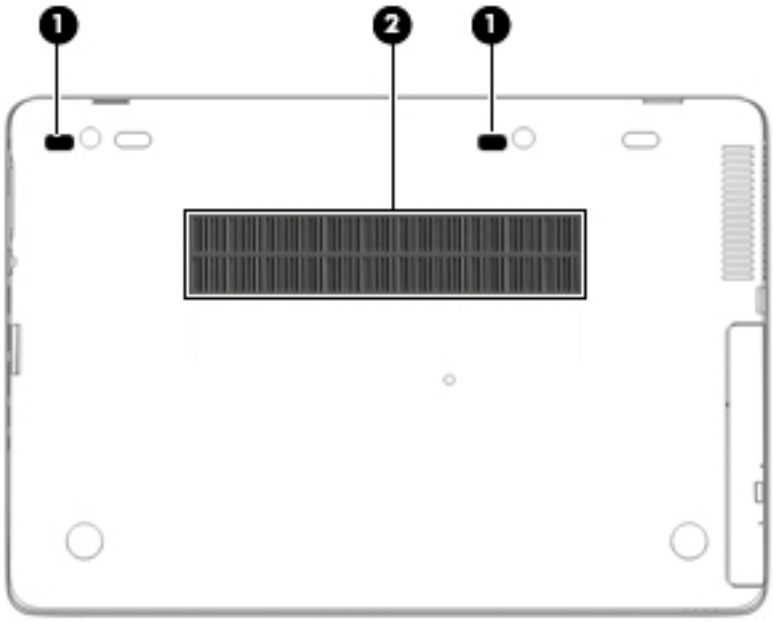

Component		Description
(1)	Docking station support holes	Support an optional docking station.
(2)	Vent	Enables airflow to cool internal components. **NOTE:** The computer fan starts up automatically to cool internal components and prevent overheating. It is normal for the internal fan to cycle on and off during routine operation.

Front

Component			Description
(1)		Wireless light	On: An integrated wireless device, such as a wireless local area network (WLAN) device and/or a Bluetooth® device and/or a WWAN device, is on. **NOTE:** On some models, the wireless light is amber when all wireless devices are off.
(2)		Power light	• On: The computer is on. • Blinking: The computer is in the Sleep state, a power-saving state. The computer shuts off power to the display and other unneeded components. • Off: The computer is off or in Hibernation. Hibernation is a power-saving state that uses the least amount of power.
(3)		Battery light	When AC power is connected: • White: The battery charge is greater than 90 percent. • Amber: The battery charge is from 0 to 90 percent. • Off: The battery is not charging. When AC power is disconnected (battery not charging): • Blinking amber: The battery has reached a low battery level. When the battery has reached a critical battery level, the battery light begins blinking rapidly. • Off: The battery is not charging.
(4)		Drive light	• Blinking white: The hard drive is being accessed. • Amber: HP 3D DriveGuard has temporarily parked the hard drive.

Rear

Component		Description
(1)	External monitor port	Connects an external VGA monitor or projector.
(2)	Serial port (select products only)	Connects an optional device such as a serial modem, mouse, or printer.

Locating system information

Important system information is located on the bottom edge of the tablet or on the keyboard base. You may need the information when travelling internationally or when you contact support:

(1): Serial number

(2): Product number

(3): Model number

(4): Warranty period

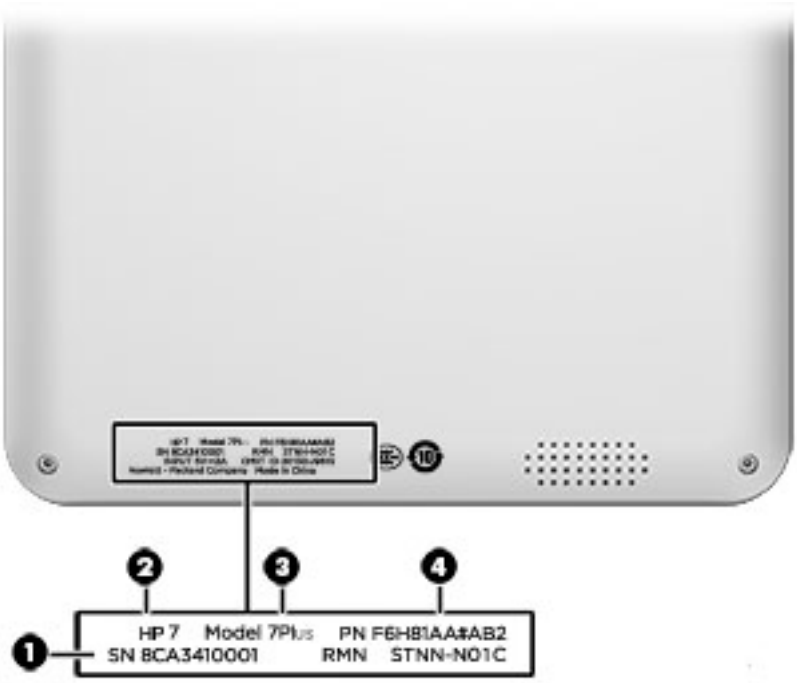

Using Windows, briefly press the fn+esc key combination to display the System Information screen, which provides the product name and serial number of your computer, as well as information about the memory, processor, BIOS, and keyboard.

3 Illustrated parts catalog

Computer major components

NOTE: HP continually improves and changes product parts. For complete and current information on supported parts for your computer, go to http://partsurfer.hp.com, select your country or region, and then follow the on-screen instructions.

NOTE: Details about your computer, including model, serial number, product key, and length of warranty, are on the service tag at the bottom of your computer. See Locating system information on page 20 for details.

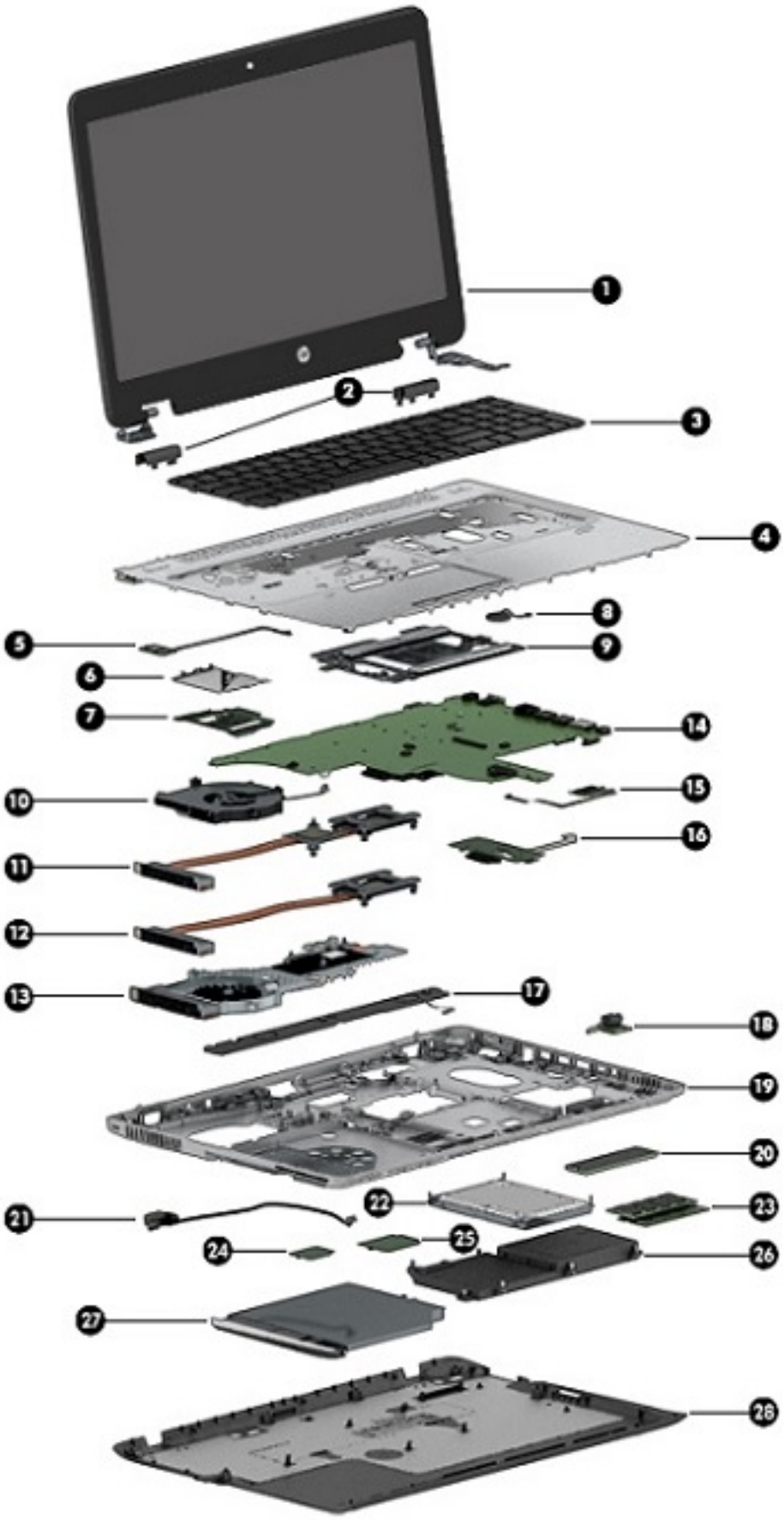
1
2
3
4
5
6
7
8
9
10
11
12
13
14
15
16
17
18
19
20
21
22
23
24
25
26
27
28

Item	Component	Spare part number
(1)	**Display** **NOTE:** For spare part information, see Display assembly subcomponents on page 27.	
(2)	**Hinge covers**	
	For 14” products	840685-001
	For 15” products	840738-001
(3)	**Keyboard** **NOTE:** For a detailed list of country codes, see Keyboard on page 47.	
	Keyboard for 14” products (includes keyboard cable)	840791-001
	Keyboard for 14” products for use in Japan	923241-291
	Backlit keyboard for 14” products (includes keyboard cable and backlight cable)	840800-001 840801-001
	Backlit keyboard for 14” products (includes keyboard cable and backlight cable) for use in Japan	923242-291 923243-291
	Keyboard for 15” products (includes keyboard cable)	841136-001
	Keyboard for 15” products (includes keyboard cable) for use in Japan	923244-291
	Backlit keyboard for 15” products (includes keyboard cable and backlight cable)	841137-001
	Backlit keyboard for 15” products (includes keyboard cable and backlight cable) for use in Japan	923245-291 923246-291
(4)	**Top cover** (includes TouchPad, bracket, and pointing stick (select products only))	
	Top cover for 14" products with a TouchPad	840719-001
	Top cover for 14" products with a TouchPad and pointing stick	840720-001
	Top cover for 14" products with a TouchPad, TouchPad on/off button, and TouchPad bracket	840721-001
	Top cover for 14" products with a TouchPad, pointing stick, TouchPad on/off button, and bracket	845170-001
	Top cover for 15" products with a TouchPad	840751-001
	Top cover for 15" products with a TouchPad and pointing stick	840752-001
	Top cover for 15" products with a TouchPad, TouchPad on/off button, and bracket	840753-001
	Top cover for 15" products with a TouchPad, pointing stick, TouchPad on/off button, and bracket	845172-001
(5)	**Power button board** (includes cable)	
	For 14" products	840693-001
	For 15" products	840744-001
(6)	**Smart card reader metal shield** (included with Smart card reader)	
(7)	**Smart card reader board** (includes metal shield)	
	For 14” products	920194-001

Item	Component	Spare part number
	For 15” products	920193-001
(8)	**RTC battery** (includes cable)	651948-001
(9)	**TouchPad bracket** (included with spare part numbers 840721-001, 840753-001, 845170-001, and 845172-001)	
(10)	**Fan** (included with heat sink)	
(11)	**Heat sink** for 14" products with discrete graphics	840663-001
	Heat sink for 15" products with discrete graphics	840733-001
(12)	**Heat sink** for 14" products with integrated graphics	840662-001
	Heat sink for 15" products with integrated graphics	840732-001
(13)	**Heat sink** for 15" products with high-quality integrated graphics (select products only)	920191-001
(14)	**System board**	
	Discrete memory, Intel i5-7300U processor, and WWAN capability	916828-001
	Discrete memory, Intel i5-7300U processor, Windows, and WWAN capability	916828-601
	Discrete memory, Intel i7-7600U processor, and WWAN capability	916829-001
	Discrete memory, Intel i7-7600U processor, Windows, and WWAN capability	916829-601
	UMA memory, Intel i3-7100U processor	916830-001
	UMA memory, Intel i3-7100U processor, and Windows	916830-601
	UMA memory, Intel i3-7100U processor, and WWAN capability	916831-001
	UMA memory, Intel i3-7100U processor, Windows, and WWAN capability	916831-601
	UMA memory, Intel i5-7200U processor	916832-001
	UMA memory, Intel i5-7200U processor, and Windows	916832-601
	UMA memory, Intel i5-7200U processor, and WWAN capability	916833-001
	UMA memory, Intel i5-7200U processor, Windows, and WWAN capability	916833-601
	UMA memory, Intel i5-7300U processor, and WWAN capability	916834-001
	UMA memory, Intel i5-7300U processor, Windows, and WWAN capability	916834-601
	UMA memory, Intel i7-7600U processor, and WWAN capability	916835-001
	UMA memory, Intel i7-7600U processor, Windows, and WWAN capability	916835-601
	UMA memory, Inteli 5-7440HQ processor, and WWAN capability	918109-001
	UMA memory, Intel i5-7440HQ processor, Windows, and WWAN capability	918109-601
	UMA memory, Inte li7-7820HQ processor, and WWAN capability	918110-001
	UMA memory, Inte li7-7820HQ processor, Windows, and WWAN capability	918110-601
(15)	**Fingerprint reader board** (includes cable)	
	For 14" products	840664-001
	For 15" products	840735-001
(16)	**Optical drive board** (includes cable)	

Item	Component	Spare part number
	NOTE: For spare part information, see Mass storage devices on page 29.	
(17)	**Speaker** (includes cable)	840700-001
(18)	**Audio board** (includes cable)	917458-001
(19)	**Base enclosure**	
	For 14" products	840657-001
	For 15" products	840725-001
(20)	**Solid-state drive**	
	NOTE: For spare part information, see Mass storage devices on page 29.	
(21)	**Serial port** (includes cable) (select products only)	840746-001
(22)	**Hard drive**	
	NOTE: For spare part information, see Mass storage devices on page 29.	
(23)	**Memory**	
	4GB 2133MHz 1.2v DDR4 shared memory	820569-002
	8GB 2133MHz 1.2v DDR4 shared memory	820570-002
(24)	**WLAN module**	
	Realtek 11BGN+BT4 1x1 SANJI2 CB	855106-852
	11AC+BT 1x1 3168.NGWG M.2 MOW	863934-852
	11AC+BT INT 7265NV M.2 D1 MOW	901229-852
	11AC 2x2 INT 8265NGWMG	910264-852
	11AC 2x2 INT 8265NGWMG.NV	918855-852
(25)	**WWAN module** (select products only)	
	T77W595 LTE M.2 with GPS	800870-002
	Huawei Wrangler 2 HSPA+M.2	918670-852
	Macan ME906S LTE with GPS M.2	918671-852
(26)	**Battery**—3-cell HP Long Life Prismatic 48 WHr (4.21 Ahr)	801554-001
(27)	**Optical drive**	
	NOTE: For spare part information, see Mass storage devices on page 29.	
(28)	**Service door**	
	For 14" products	840657-001
	For 15" products	840725-001

Display assembly subcomponents

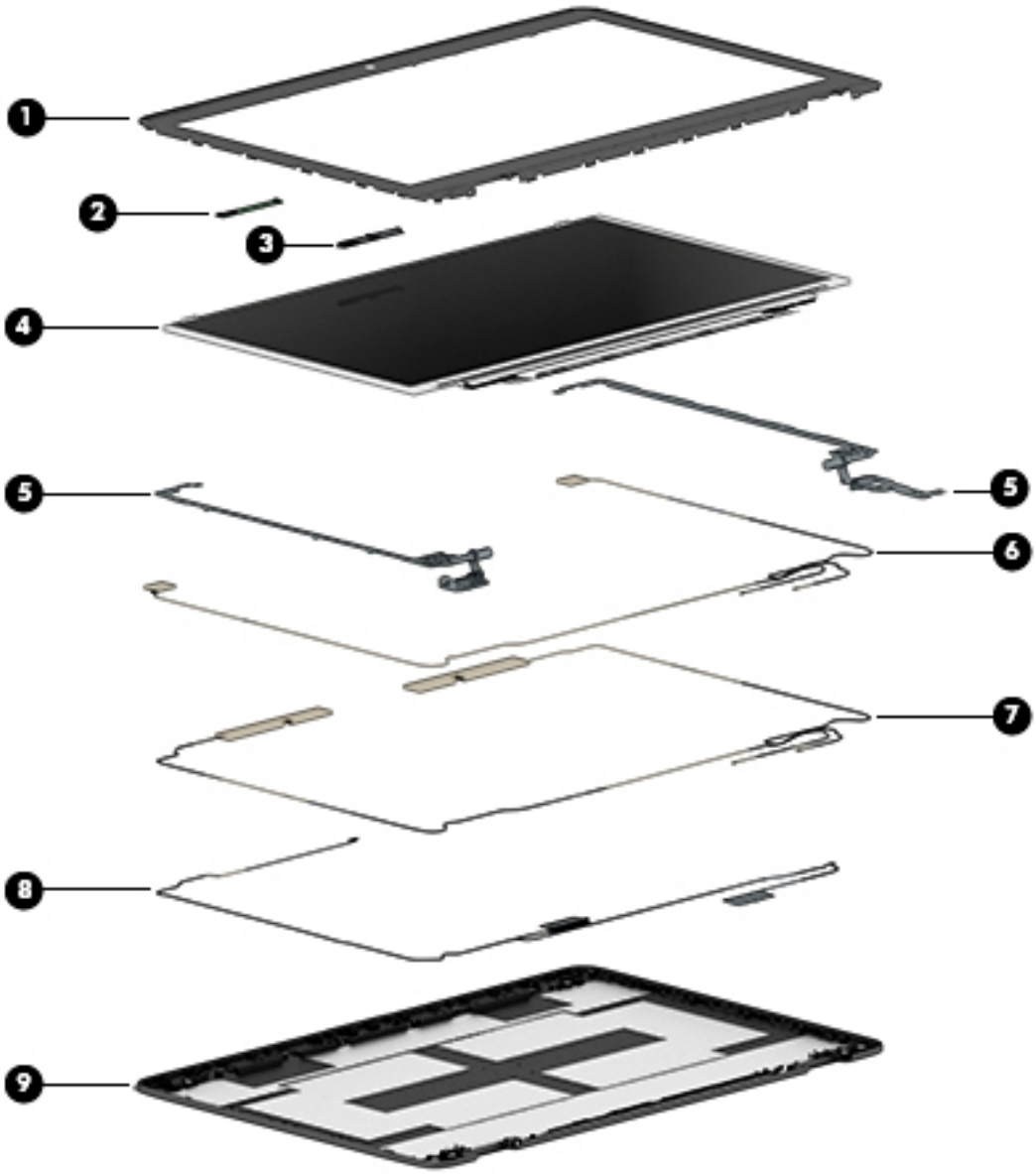

Item	Component	Spare part number
(1)	**Display bezel**	
	For 14" HP 640 products	840686-001
	For 15" HP 650 products	840396-001
(2)	**Hinge cover** for 14" products	840685-001
	Hinge cover for 14" products with a touch screen	840686-001
(3)	**Hinge cover** for 15" products	840738-001
	Hinge cover for 15" products with a touch screen	840739-001
(4)	**Display panel**	

Item	Component	Spare part number
	Slim panel for 14" products	806860-009
		919315-001
	Touch screen for 14" products (with camera and WWAN capability)	917521-001
	Slim panel for 15" products	721363-017
		919316-001
	Touch screen for 15" products (with camera and WWAN capability)	917522-001
(5)	**Hinge Kit**	
	For 14" products	840684-001
	For 15" products	840737-001
(6)	**WLAN cable** included in Cable Kit	
	For 14" products	840659-001
	For 15" products	840727-001
(7)	**WWAN cable**, included in Cable Kit	
	For 14" products	840659-001
	For 15" products	840727-001
(8)	**Display cable**	
	For 14" products	840660-001
	For 15" products	840728-001
(9)	**Back cover**	
	For 14" products	845171-001
	For 15" products	8405169-001

Mass storage devices

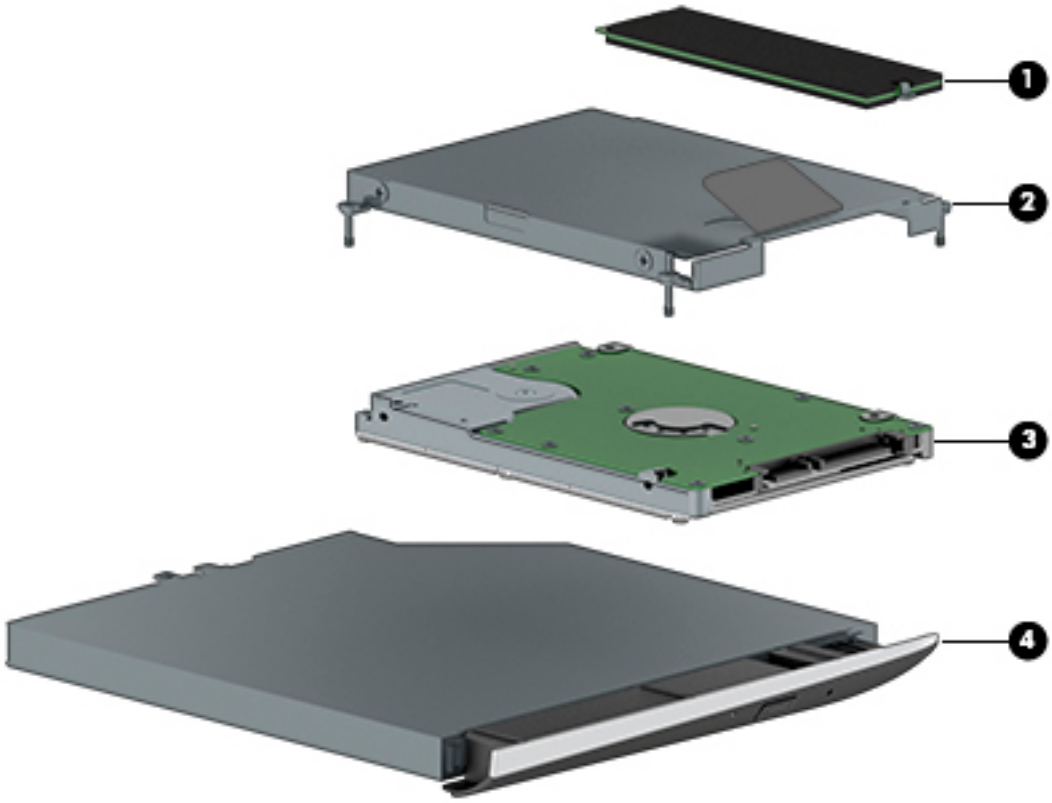

Item	Component	Spare part number
(1)	**Solid-state drive**	
	360 GB PCIe TLC	922249-001
	128 GB M2 SATA-3 Value	922250-001
	256 GB Turbo G2 TLC	922251-001
	256 GB SATA-3 self-encrypting drive Opal2 TLC	922252-001
	512 GB Turbo G2 TLC	922253-001
	512 GB Turbo G2 self-encrypting drive Opal2 TLC	922254-001
(2)	**Hard Drive Hardware Kit**	917460-001
(3)	**Hard drive**	
	500GB 7200RPM RAW 7mm	703267-002
	1TB 5400RPM RAW 7mm	762990-002
	500GB 7200RPM SATA FIPS RAW 7mm	820572-002
	500GB 7200RPM SATA self-encrypting RAW 7mm	820573-002
	500 GB 5400 RPM SATA RAW Hybrid 7 mm	732000-002
(4)	**Optical drive (select products only)**	

Item	Component	Spare part number
	Optical drive/DVD ROM combo	918775-001
	Optical drive SATA /DVD ROM combo	918777-001
	Optical drive BDXL Blu-ray writer	918777-001
	Optical drive board for products with an optical drive	840745-001
	Optical drive board for products with an optical drive and a serial port (select products only)	840746-001
	Optical drive hardware kit for 14” products	920061-001
	Optical drive hardware kit for 15” products	920062-001

Miscellaneous parts

Component	Spare part number
AC adapter	
65 W AC adapter nPFC S-3P 4.5MM	710412-001
65 W AC adapter nPFC SMART 4.5mm EM	714657-001
45 W AC adapter NPFC SMART RC 4.5mm NSLIM	741727-001
45 W AC adapter NPFC SMART RC 4.5mm 2P	742436-001
90 W AC adapter PFC S-3P 4.5mm (select products only)	710413-001
Antenna Kit	
For 14" products	840655-001
For 15" products	840723-001
Bracket Kit (includes fingerprint reader bracket, WLAN module bracket, and smart card reader bracket for 14" products)	
For 14" products	840683-001
For 15" products	840736-001
Cable Kit	
For 14" products	840659-001
For 15" products	840727-001
Microphone board	920192-001
Near Field Communication (NFC) module	840695-001
Near Field Communication (NFC) cable	
For 14" products	840661-001
For 15" products	840729-001
Power cord	
For use in Japan	190548-003
For use in NEMA	213349-009

Component	Spare part number
For use in Europe	213350-009
For use in the United Kingdom	213351-009
For use in Italy	213352-008
For use in Denmark	213353-008
For use in Switzerland	213354-008
For use in Switzerland	213356-008
For use in South Korea	267836-008
For use in Thailand	285096-008
For use in the People's Republic of China	286497-008
For use in Japan	349756-002
For use in LG RoHS	361240-001
For use in Taiwan	393313-003
For use in Israel	398063-003
For use in Argentina	401300-0007
For use in India	404827-003
For use in Brazil	438722-004
Plastic/Rubber Kit	
For 14" products	917457-001
For 15" products	917461-001
Rubber Kit	828884-001
Screw Kit	
For 14" products	917459-001
For 15" products	919558-001
Speaker Kit	840700-001

4 Removal and replacement procedures preliminary requirements

Tools required

You will need the following tools to complete the removal and replacement procedures:

- Flat-bladed screwdriver
- Magnetic screwdriver
- Phillips P0 and P1 screwdrivers

Service considerations

The following sections include some of the considerations that you must keep in mind during disassembly and assembly procedures.

NOTE: As you remove each subassembly from the computer, place the subassembly (and all accompanying screws) away from the work area to prevent damage.

Plastic parts

CAUTION: Using excessive force during disassembly and reassembly can damage plastic parts. Use care when handling the plastic

Cables and connectors

⚠ **CAUTION:** When servicing the computer, be sure that cables are placed in their proper locations during the reassembly process. Improper cable placement can damage the computer.

Cables must be handled with extreme care to avoid damage. Apply only the tension required to unseat or seat the cables during removal and insertion. Handle cables by the connector whenever possible. In all cases, avoid bending, twisting, or tearing cables. Be sure that cables are routed in such a way that they cannot be caught or snagged by parts being removed or replaced. Handle flex cables with extreme care; these cables tear easily.

Drive handling

⚠ **CAUTION:** Drives are fragile components that must be handled with care. To prevent damage to the computer, damage to a drive, or loss of information, observe these precautions:

Before removing or inserting a hard drive, shut down the computer. If you are unsure whether the computer is off or in Hibernation, turn the computer on, and then shut it down through the operating system.

Before handling a drive, be sure that you are discharged of static electricity. While handling a drive, avoid touching the connector.

Before removing an optical drive, be sure that a disc is not in the drive and be sure that the optical drive tray is closed.

Handle drives on surfaces covered with at least one inch of shock-proof foam.

Avoid dropping drives from any height onto any surface.

After removing a hard drive or an optical drive, place it in a static-proof bag.

Avoid exposing an internal hard drive to products that have magnetic fields, such as monitors or speakers.

Avoid exposing a drive to temperature extremes or liquids.

If a drive must be mailed, place the drive in a bubble pack mailer or other suitable form of protective packaging and label the package “FRAGILE.”

Grounding guidelines

Electrostatic discharge damage

Electronic components are sensitive to electrostatic discharge (ESD). Circuitry design and structure determine the degree of sensitivity. Networks built into many integrated circuits provide some protection, but in many cases, ESD contains enough power to alter device parameters or melt silicon junctions.

A discharge of static electricity from a finger or other conductor can destroy static-sensitive devices or microcircuitry. Even if the spark is neither felt nor heard, damage may have occurred.

An electronic device exposed to ESD may not be affected at all and can work perfectly throughout a normal cycle. Or the device may function normally for a while, then degrade in the internal layers, reducing its life expectancy.

⚠ **CAUTION:** To prevent damage to the computer when you are removing or installing internal components, observe these precautions:

Keep components in their electrostatic-safe containers until you are ready to install them.

Before touching an electronic component, discharge static electricity by using the guidelines described in this section.

Avoid touching pins, leads, and circuitry. Handle electronic components as little as possible.

If you remove a component, place it in an electrostatic-safe container.

The following table shows how humidity affects the electrostatic voltage levels generated by different activities.

⚠ **CAUTION:** A product can be degraded by as little as 700 V.

Typical electrostatic voltage levels

	Relative humidity		
Event	**10%**	**40%**	**55%**
Walking across carpet	35,000 V	15,000 V	7,500 V
Walking across vinyl floor	12,000 V	5,000 V	3,000 V
Motions of bench worker	6,000 V	800 V	400 V
Removing DIPS from plastic tube	2,000 V	700 V	400 V
Removing DIPS from vinyl tray	11,500 V	4,000 V	2,000 V
Removing DIPS from plastic foam	14,500 V	5,000 V	3,500 V
Removing bubble pack from PCB	26,500 V	20,000 V	7,000 V
Packing PCBs in foam-lined box	21,000 V	11,000 V	5,000 V

Packaging and transporting guidelines

Follow these grounding guidelines when packaging and transporting equipment:

- To avoid hand contact, transport products in static-safe tubes, bags, or boxes.
- Protect ESD-sensitive parts and assemblies with conductive or approved containers or packaging.
- Keep ESD-sensitive parts in their containers until the parts arrive at static-free workstations.
- Place items on a grounded surface before removing items from their containers.
- Always be properly grounded when touching a component or assembly.
- Store reusable ESD-sensitive parts from assemblies in protective packaging or nonconductive foam.
- Use transporters and conveyors made of antistatic belts and roller bushings. Be sure that mechanized equipment used for moving materials is wired to ground and that proper materials are selected to avoid static charging. When grounding is not possible, use an ionizer to dissipate electric charges.

Workstation guidelines

Follow these grounding workstation guidelines:

- Cover the workstation with approved static-shielding material.
- Use a wrist strap connected to a properly grounded work surface and use properly grounded tools and equipment.
- Use conductive field service tools, such as cutters, screwdrivers, and vacuums.
- When fixtures must directly contact dissipative surfaces, use fixtures made only of static safe materials.
- Keep the work area free of nonconductive materials, such as ordinary plastic assembly aids and plastic foam.
- Handle ESD-sensitive components, parts, and assemblies by the case or PCM laminate. Handle these items only at static-free workstations.
- Avoid contact with pins, leads, or circuitry.
- Turn off power and input signals before inserting or removing connectors or test equipment.

Equipment guidelines

Grounding equipment must include either a wrist strap or a foot strap at a grounded workstation.

- When seated, wear a wrist strap connected to a grounded system. Wrist straps are flexible straps with a minimum of one megohm ±10% resistance in the ground cords. To provide proper ground, wear a strap snugly against the skin at all times. On grounded mats with banana-plug connectors, use alligator clips to connect a wrist strap.
- When standing, use foot straps and a grounded floor mat. Foot straps (heel, toe, or boot straps) can be used at standing workstations and are compatible with most types of shoes or boots. On conductive floors or dissipative floor mats, use foot straps on both feet with a minimum of one megohm resistance between the operator and ground. To be effective, the conductive equipment must be worn in contact with the skin.

The following grounding equipment is recommended to prevent electrostatic damage:

- Antistatic tape
- Antistatic smocks, aprons, and sleeve protectors
- Conductive bins and other assembly or soldering aids
- Nonconductive foam
- Conductive tabletop workstations with ground cords of one megohm resistance
- Static-dissipative tables or floor mats with hard ties to the ground
- Field service kits
- Static awareness labels
- Material-handling packages
- Nonconductive plastic bags, tubes, or boxes
- Metal tote boxes
- Electrostatic voltage levels and protective materials

The following table lists the shielding protection provided by antistatic bags and floor mats.

Material	Use	Voltage protection level
Antistatic plastics	Bags	1,500 V
Carbon-loaded plastic	Floor mats	7,500 V
Metallized laminate	Floor mats	5,000 V

5 Removal and replacement procedures for Authorized Service Provider parts

This chapter provides removal and replacement procedures for Authorized Service Provider only parts.

CAUTION: Components described in this chapter should only be accessed by an authorized service provider. Accessing these parts can damage the computer or void the warranty.

CAUTION: This computer does not have user-replaceable parts. Only HP authorized service providers should perform the removal and replacement procedures described here. Accessing the internal part could damage the computer or void the warranty.

Component replacement procedures

NOTE: Details about your computer, including model, serial number, product key, and length of warranty, are on the service tag at the bottom of your computer. See Locating system information on page 20 for details.

NOTE: HP continually improves and changes product parts. For complete and current information on supported parts for your computer, go to http://partsurfer.hp.com, select your country or region, and then follow the on-screen instructions.

There are as many as xx screws that must be removed, replaced, and/or loosened when servicing Authorized Service Provider only parts. Make special note of each screw size and location during removal and replacement.

Service door

Description	Spare part number
Service door	
For 14" products	840657-001
For 15" products	840725-001

1. Turn off the computer. If you are unsure whether the computer is off or in Hibernation, turn the computer on, and then shut it down through the operating system.
2. Disconnect the power from the computer by unplugging the power cord from the computer.
3. Disconnect all external devices from the computer.

Remove the service door:

1. Depending on the product, remove 8 (for 14 products) or 10 (for 15 products) M2.5x6L P1 screws **(1)**.

2. Lift the service door to remove it **(2)**.

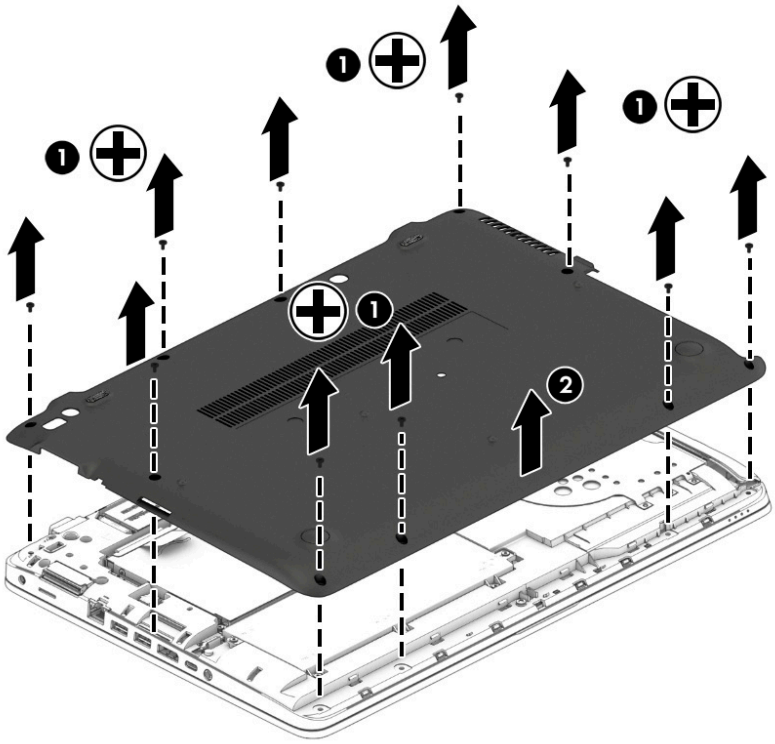

Battery

Description	Spare part number
Battery— 3-cell HP Long Life Prismatic 48 WHr (4.21 Ahr)	801554-001

IMPORTANT: Make special note of each screw and screw lock size and location during removal and replacement

Before removing the battery, follow these steps:

1. Shut down the computer.
2. Disconnect all external devices connected to the computer.
3. Disconnect the power from the computer by first unplugging the power cord from the AC outlet and then unplugging the AC adapter from the computer.
4. Remove the service door (see Service door on page 37).

Remove the battery:

1. Loosen 6 P1 captive screws **(1)**.

2. Lift the battery **(2)**, and then remove it **(3)**.

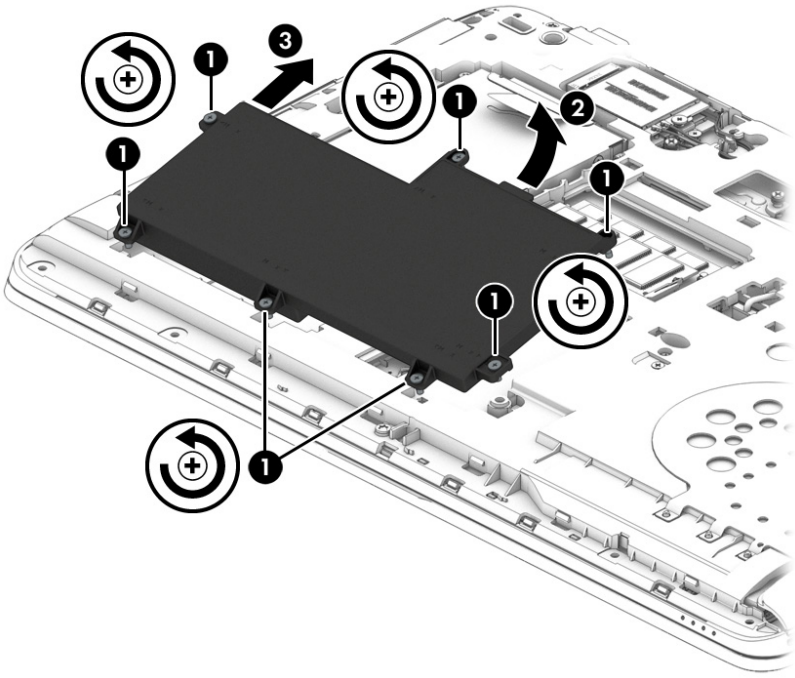

Reverse this procedure to install the battery.

Hard drive

Description	Spare part number
Hard drive	
500 GB 7200RPM RAW 7mm	703267-002
1 TB 5400RPM RAW 7mm	762990-002
500 GB 7200RPM SATA FIPS RAW 7mm	820572-002
500 GB 7200RPM SATA self-encrypting RAW 7mm	820573-002
500 GB 5400 RPM SATA RAW Hybrid 7mm	732000-002
HDD Hardware Kit	917460-001

IMPORTANT: Make special note of each screw and screw lock size and location during removal and replacement

Before removing the hard drive, follow these steps:

1. Shut down the computer.
2. Disconnect all external devices connected to the computer.
3. Disconnect the power from the computer by first unplugging the power cord from the AC outlet and then unplugging the AC adapter from the computer.
4. Remove the following components:

a. Service door (see Service door on page 37).

b. Battery (see Battery on page 38).

Remove the hard drive:

1. Loosen 4 P1 captive screws or remove 4 M 2.0x8L P1 screws **(1)**.
2. Pull the plastic tab **(2)**, and then remove the hard drive **(3)**.

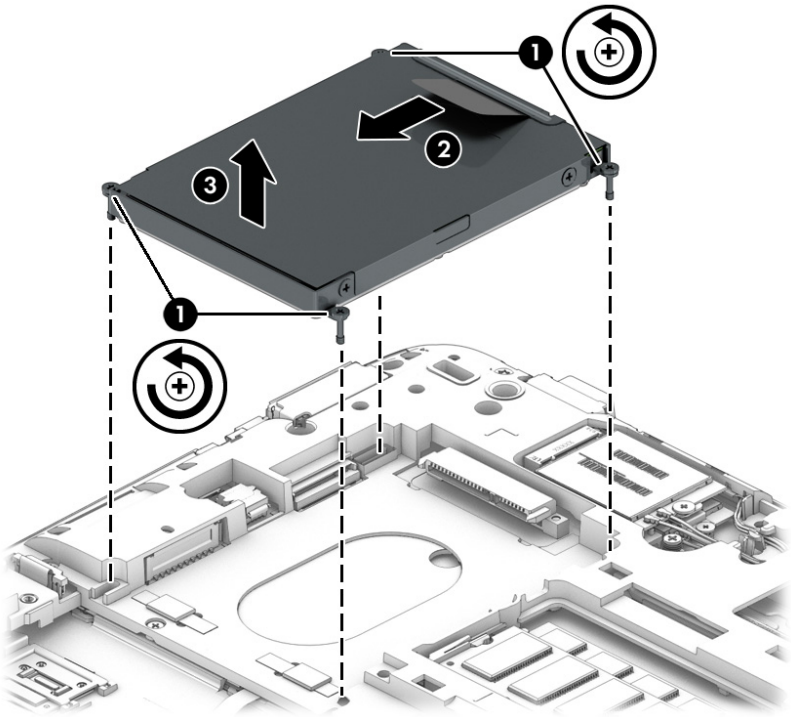

3. If it is necessary to disassemble the hard drive, remove the 4 screws **(1)**, and then remove pull the tab **(2)** to remove the cover from the hard drive.

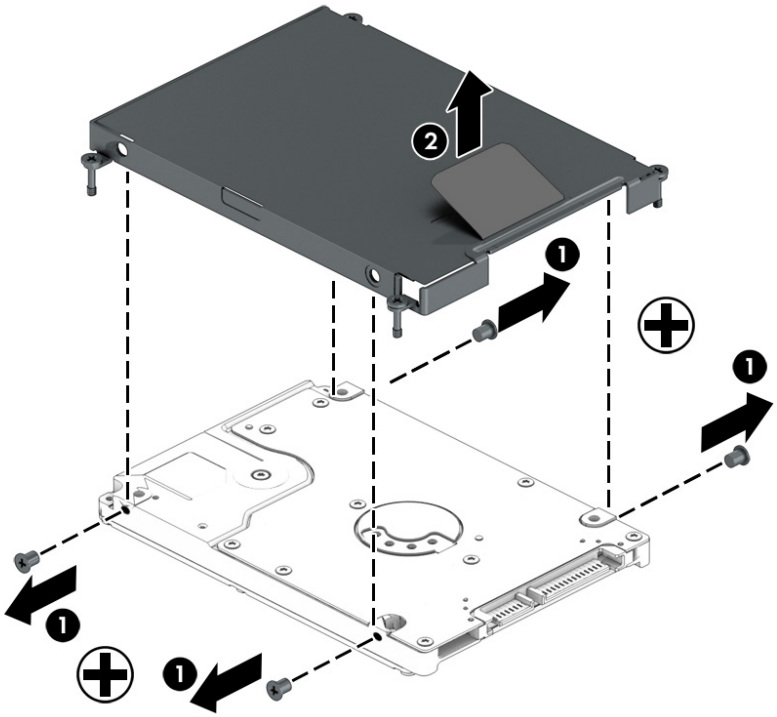

Reverse this procedure to reassemble and install the hard drive.

Solid-state drive (select products only)

Description	Spare part number
Solid-state drive	
360 GB PCIe TLC	922249-001
128 GB M2 SATA-3 Value	922250-001
256 GB Turbo G2 TLC	922251-001
256 GB SATA-3 self-encrypting drive Opal2 TLC	922252-001
512 GB Turbo G2 TLC	922253-001
512 GB Turbo G2 self-encrypting drive Opal2 TLC	922254-001

IMPORTANT: Make special note of each screw and screw lock size and location during removal and replacement

Before removing the solid-state drive, follow these steps:

1. Shut down the computer.
2. Disconnect all external devices connected to the computer.

3. Disconnect the power from the computer by first unplugging the power cord from the AC outlet and then unplugging the AC adapter from the computer.
4. Remove the following components:
   a. Service door (see Service door on page 37).
   b. Remove the battery (see Battery on page 38)
   c. Hard drive (see Hard drive on page 39).

Remove the solid-state drive:

▲ Remove 1 Phillips M2.0x8 screw **(1)**, and then remove the solid-state drive **(2)**.

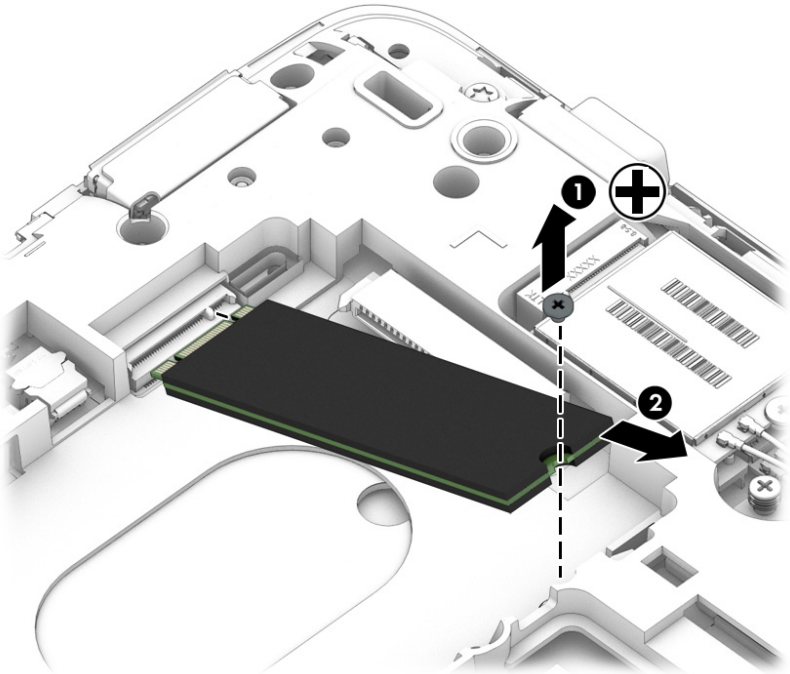

Reverse this procedure to install the solid-state drive.

WWAN module (select products only)

NOTE: The WWAN module spare part kit includes the cable.

Description	Spare part number
WWAN module	
T77W595 LTE M.2 with GPS	800870-002
Huawei Wrangler 2 HSPA+M.2	918670-852
Macan ME906S LTE with GPS M.2	918671-852

IMPORTANT: Make special note of each screw and screw lock size and location during removal and replacement

Before removing the WWAN module, follow these steps:

1. Shut down the computer.
2. Disconnect all external devices connected to the computer.
3. Disconnect the power from the computer by first unplugging the power cord from the AC outlet and then unplugging the AC adapter from the computer.
4. Remove the following components:
   a. Service door (see Service door on page 37).
   b. Remove the battery (see Battery on page 38)
   c. Hard drive (see Hard drive on page 39).
   d. Solid state drive (see Solid-state drive (select products only) on page 41).

Remove the WWAN module:

1. Disconnect the two cables **(1)**.
2. Remove 1 M 2.0x 3L P1screw **(2)**, and then remove the WWAN module.

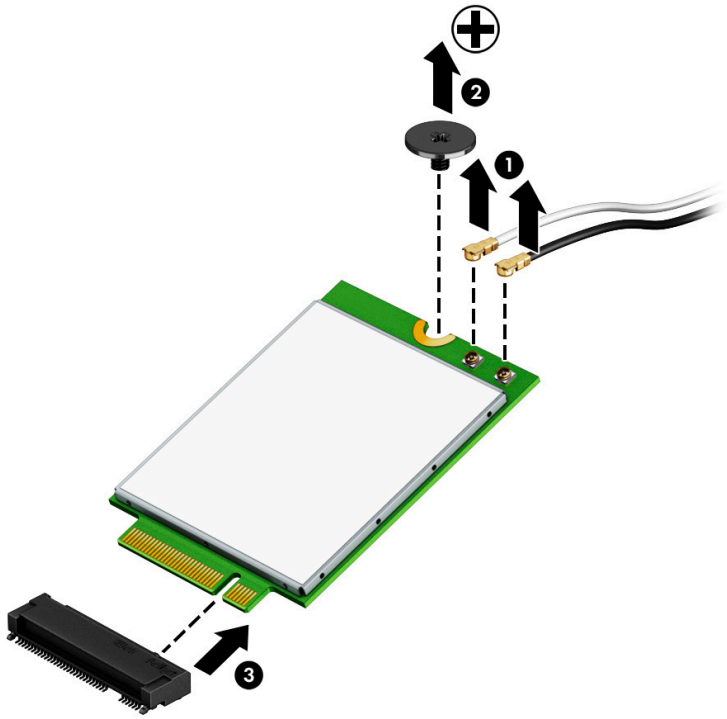

Reverse this procedure to install the WWAN module.

WLAN module

NOTE: The WLAN module spare part kit includes the cable.

Description	Spare part number
WLAN module	

Description	Spare part number
Realtek 11BGN+BT4 1x1 SANJI2 CB	855106-852
11AC+BT 1x1 3168.NGWG M.2 MOW	863934-852
11AC+BT INT 7265NV M.2 D1 MOW	901229-852
11AC 2x2 INT 8265NGWMG	910264-852
11AC 2x2 INT 8265NGWMG.NV	918855-852

IMPORTANT: Make special note of each screw and screw lock size and location during removal and replacement

Before removing the WLAN, follow these steps:

1. Shut down the computer.
2. Disconnect all external devices connected to the computer.
3. Disconnect the power from the computer by first unplugging the power cord from the AC outlet and then unplugging the AC adapter from the computer.
4. Remove the following components:
   a. Service door (see Service door on page 37).
   b. Remove the battery (see Battery on page 38)
   c. Hard drive (see Hard drive on page 39).
   d. Solid state drive (see Solid-state drive (select products only) on page 41).
   e. WWAN module (see WWAN module (select products only) on page 42).

Remove the WLAN module:

1. Disconnect the two cables **(1)**.
2. Remove 1 M 2.0x3L P1 screw **(2)**.

3. Remove the bracket **(3)**, and then remove the WLAN module.

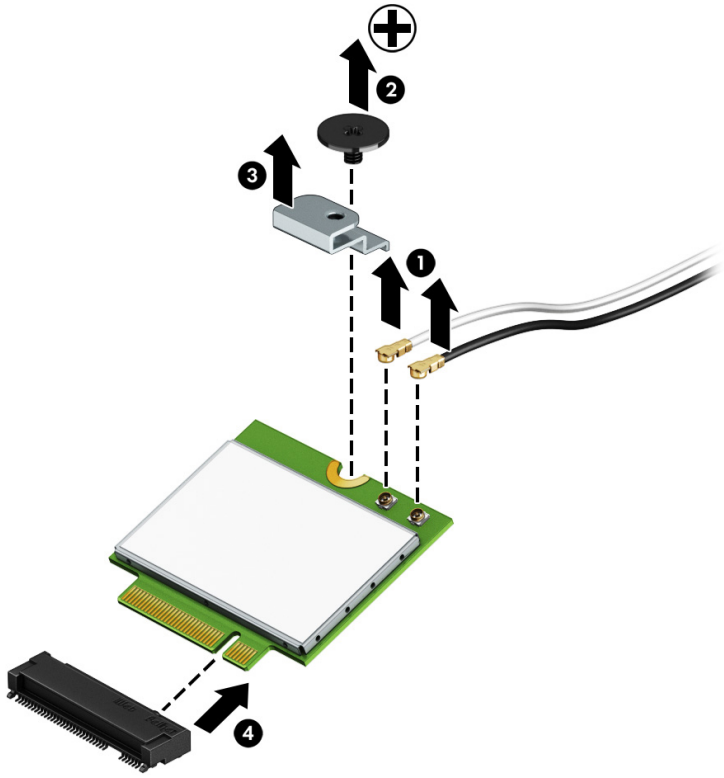

Reverse this procedure to install the WLAN module.

Optical drive

Description	Spare part number
Optical drive (select products only)	
Optical drive/DVD ROM combo	918775-001
Optical drive SATA /DVD ROM combo	918777-001
Optical drive BDXL Blu-ray writer	918777-001
Optical drive board for products with an optical drive	840745-001
Optical drive board for products with an optical drive and a serial port (select products only)	840746-001
Optical drive hardware kit for 14” products	920061-001
Optical drive hardware kit for 15” products	920062-001

IMPORTANT: Make special note of each screw and screw lock size and location during removal and replacement

Before removing the optical drive, follow these steps:

1. Shut down the computer.
2. Disconnect all external devices connected to the computer.
3. Disconnect the power from the computer by first unplugging the power cord from the AC outlet and then unplugging the AC adapter from the computer.
4. Remove the following components:
   a. Service door (see Service door on page 37).
   b. Battery (see Battery on page 38).
   c. Hard drive (see Hard drive on page 39).
   d. Solid-state drive (see Solid-state drive (select products only) on page 41).
   e. WWAN module (see WWAN module (select products only) on page 42).
   f. WLAN module (see WLAN module on page 43).

Remove the optical drive:

1. Remove 1 Phillips M2.0x8 screw **(1)**.
2. Remove the optical drive **(2)**.

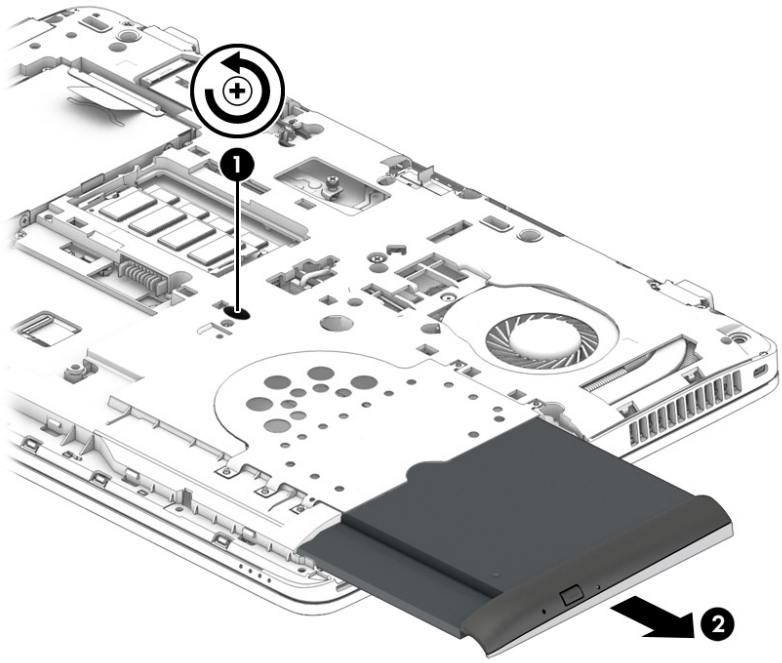

Reverse this procedure to install the optical drive.

Keyboard

In this section, the first table provides the main spare part number for the keyboard. The second table provides the country codes.

Description	Spare part number
Keyboard for 14” products (includes keyboard cable)	840791-001
Keyboard for 14” products for use in Japan	923241-291
Backlit keyboard for 14” products (includes keyboard cable and backlight cable)	840800-001 840801-001
Backlit keyboard for 14” products (includes keyboard cable and backlight cable) for use in Japan	923242-291 923243-291
Keyboard for 15” products (includes keyboard cable)	841136-001
Keyboard for 15” products (includes keyboard cable) for use in Japan	923244-291
Backlit keyboard for 15” products (includes keyboard cable and backlight cable)	841137-001
Backlit keyboard for 15” products (includes keyboard cable and backlight cable) for use in Japan	923245-291 923246-291

For use in country or region	Spare part number	For use in country or region	Spare part number	For use in country or region	Spare part number
Belgium	-A41	India	-D61	Saudi Arabia	-171
Brazil	-201	Israel	-BB1	Slovenia	-BA1
Bulgaria	-261	Italy	-061	South Korea	-AD1
Canada	-DB1	Japan	-291	Spain	-071
Czech Republic and Slovakia	-FL1	Latin America	-161	Sweden and Finland	-B71
Denmark	-081	The Netherlands	-B31	Switzerland	-BG1
Denmark, Finland, and Norway	-DH1	Northern Africa	-FP1	Taiwan	-AB1
France	-051	Norway	-091	Thailand	-281
Germany	-041	Portugal	-131	Turkey	-141
Greece	-151	Romania	-271	United Kingdom	-031
Hungary	-211	Russia	-251	United States	-001
Iceland	-DD1				

Before removing the keyboard, follow these steps:

1. Turn off the computer. If you are unsure whether the computer is off or in Hibernation, turn the computer on, and then shut it down through the operating system.
2. Disconnect the power from the computer by unplugging the power cord from the computer.
3. Disconnect all external devices from the computer.
4. Remove the following components:
   a. Service door (see Service door on page 37).
   b. Remove the battery (see Battery on page 38)
   c. Hard drive (see Hard drive on page 39).
   d. Solid-state drive (see Solid-state drive (select products only) on page 41).
   e. WWAN module (see WWAN module (select products only) on page 42).
   f. WLAN module (see WLAN module on page 43).
   g. Optical drive (see Optical drive on page 45).

Remove the keyboard:

1. Remove the 3 M 2x4L screws that secure the keyboard to the computer.

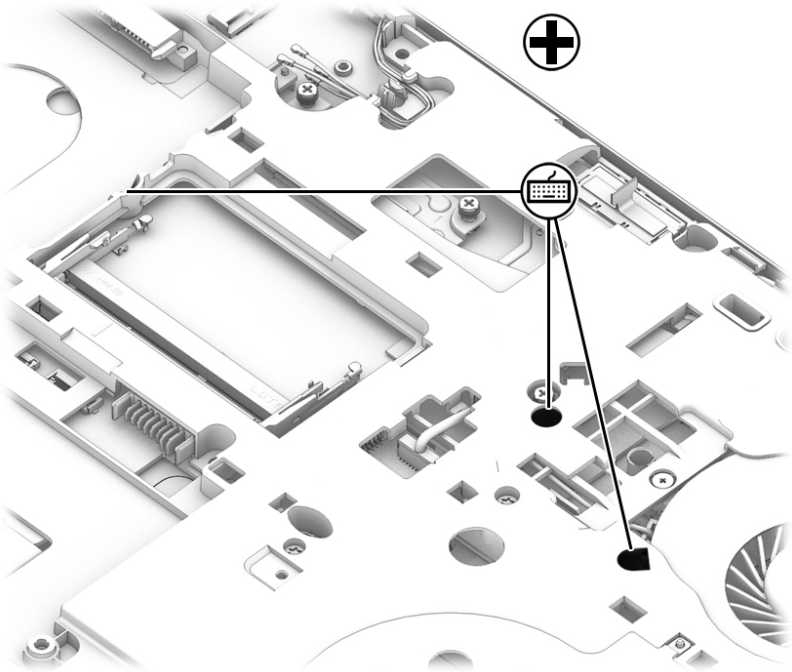

2. Position the computer open and on its side.

3. Gently insert a Torx screwdriver or other blunt tool into the keyboard release opening under the memory module, and then press gently on the back of the keyboard until the keyboard disengages from the computer.

CAUTION: Press gently to avoid damaging the mylar on the back of the keyboard.

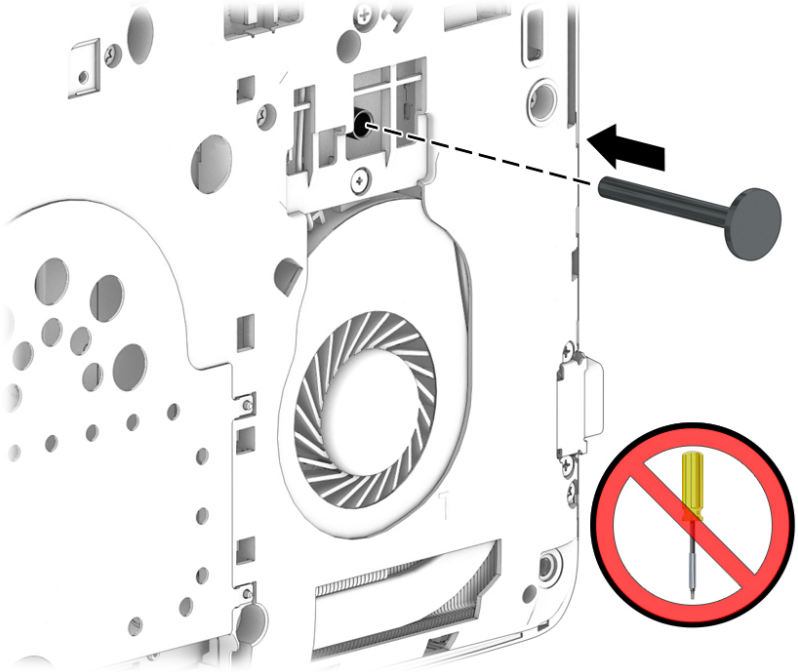

4. Rotate the keyboard downward **(1)** onto the top cover **(1)**, and then release and disconnect the following connectors and cables:

   - Release the keyboard connector **(2)** and then remove the cable **(3)**.
   - For products with a backlit keyboard, release the backlight connectors **(4)** and **(6)**, and then remove the cables **(5)** and **(7)**.

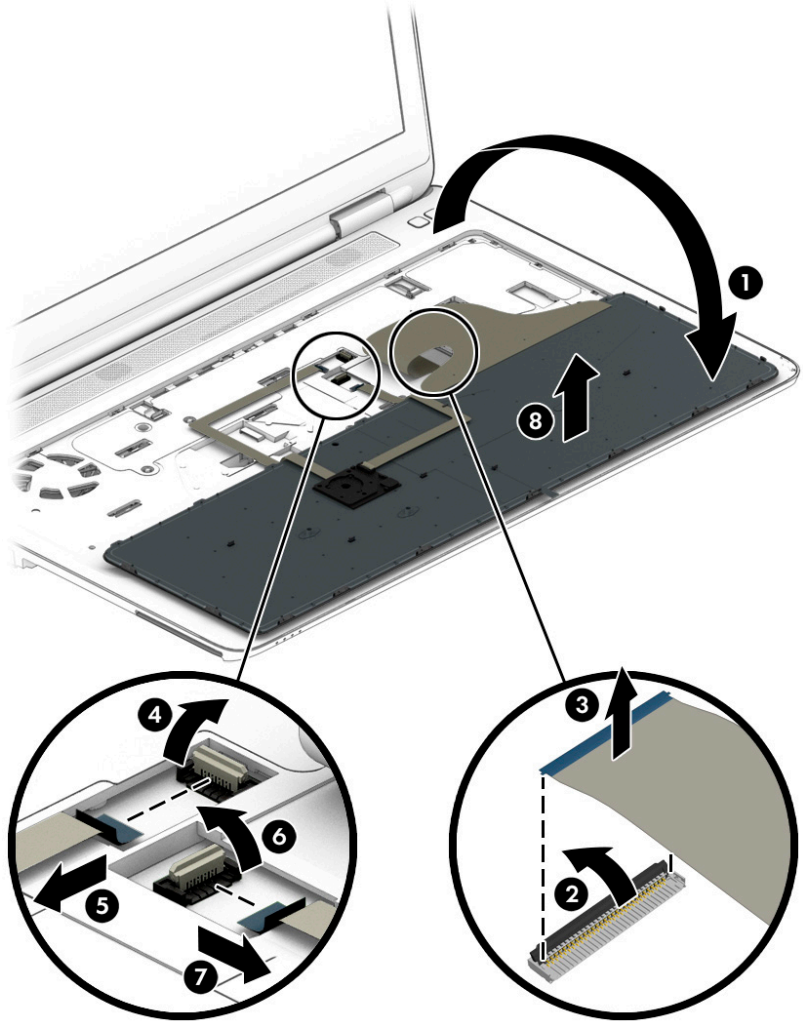

5. Remove the keyboard **(8)**.

Reverse this procedure to install the keyboard.

Memory

Description	Spare part number
Memory	
4GB 2133MHz 1.2v DDR4 shared memory	820569-002
8GB 2133MHz 1.2v DDR4 shared memory	820570-002

IMPORTANT: Make special note of each screw and screw lock size and location during removal and replacement

Before removing the memory module, follow these steps:

1. Shut down the computer.
2. Disconnect all external devices connected to the computer.

3. Disconnect the power from the computer by first unplugging the power cord from the AC outlet and then unplugging the AC adapter from the computer.
4. Remove the following components:
   a. Service door (see Service door on page 37).
   b. Battery (see Battery on page 38).
   c. Hard drive (see Hard drive on page 39).
   d. Solid-state drive (see Solid-state drive (select products only) on page 41).
   e. WWAN module (see WWAN module (select products only) on page 42).
   f. WLAN module (see WLAN module on page 43).
   g. Optical drive (see Optical drive on page 45).
   h. Keyboard (see Keyboard on page 47).

▲ If you are replacing a memory module, remove the existing memory module:.

▲ Pull away the retention clips **(1)** on each side of the memory module.

The memory module tilts up.

▲ Grasp the edge of the memory module **(2)**, and then gently pull the memory module out of the memory module slot.

⚠ **CAUTION:** To prevent damage to the memory module, hold the memory module by the edges only. Do not touch the components on the memory module.

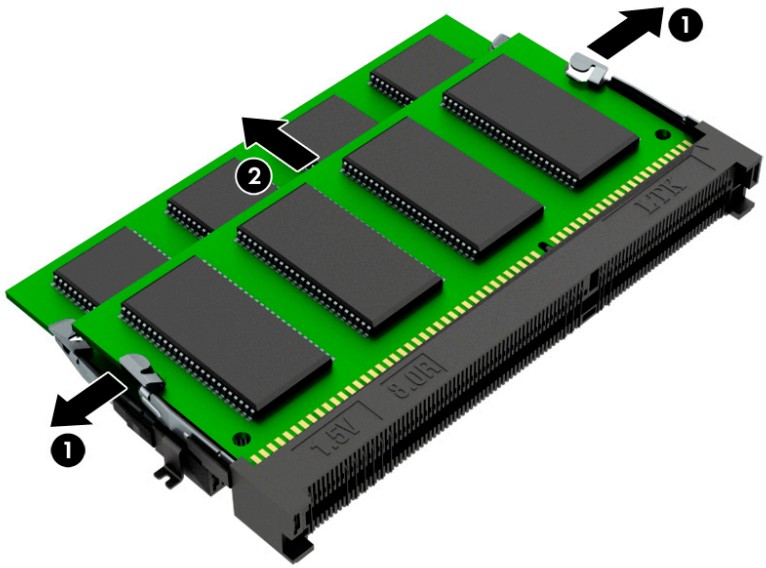

To protect a memory module after removal, place it in an electrostatic-safe container.

To install a memory module:

⚠ **CAUTION:** To prevent damage to the memory module, hold the memory module by the edges only. Do not touch the components on the memory module.

1. Align the notched edge **(1)** of the memory module with the tab in the memory module slot.

2. With the memory module at a 45-degree angle from the surface of the memory module compartment, press the module **(2)** into the memory module slot until it is seated.

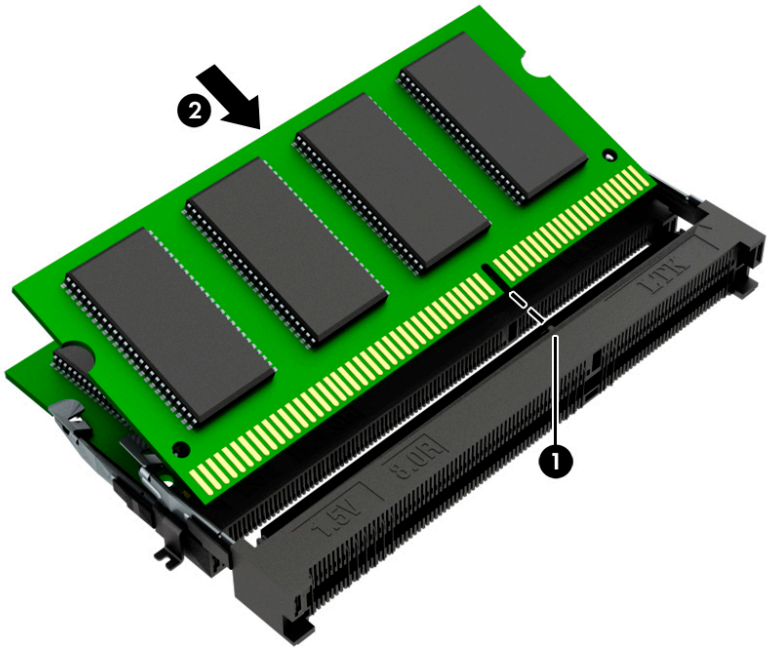

3. Gently press the memory module down, applying pressure to both the left and right edges of the memory module, until the retention clips snap into place.

CAUTION: To prevent damage to the memory module, be sure that you do not bend the memory module.

Hinge cover

Description	Spare part number
Hinge Kit for 14" products	840684-001
Hinge Kit for 15" products	840737-001
Hinge cover for 14" products	840685-001
Hinge cover for 15" products	840738-001
Hinge cover for 14" products with a touch screen	840686-001
Hinge cover for 15" products with a touch screen	840739-001

IMPORTANT: Make special note of each screw and screw lock size and location during removal and replacement

Before removing the hinge covers, follow these steps:

1. Turn off the computer. If you are unsure whether the computer is off or in Hibernation, turn the computer on, and then shut it down through the operating system.
2. Disconnect the power from the computer by unplugging the power cord from the computer.
3. Disconnect all external devices from the computer.
4. Remove the following components:
   a. Service door (see Service door on page 37).
   b. Remove the battery (see Battery on page 38)
   c. Hard drive (see Hard drive on page 39).
   d. Solid-state drive (see Solid-state drive (select products only) on page 41).
   e. WWAN module (see WWAN module (select products only) on page 42).
   f. WLAN module (see WLAN module on page 43).
   g. Optical drive (see Optical drive on page 45).
   h. Keyboard (see Keyboard on page 47).
   i. Memory (see Memory on page 50).

Remove the hinge covers:

▲ Remove the 2 M2x5L P1 screws **(1)**, and then remove the hinge covers **(2)**.

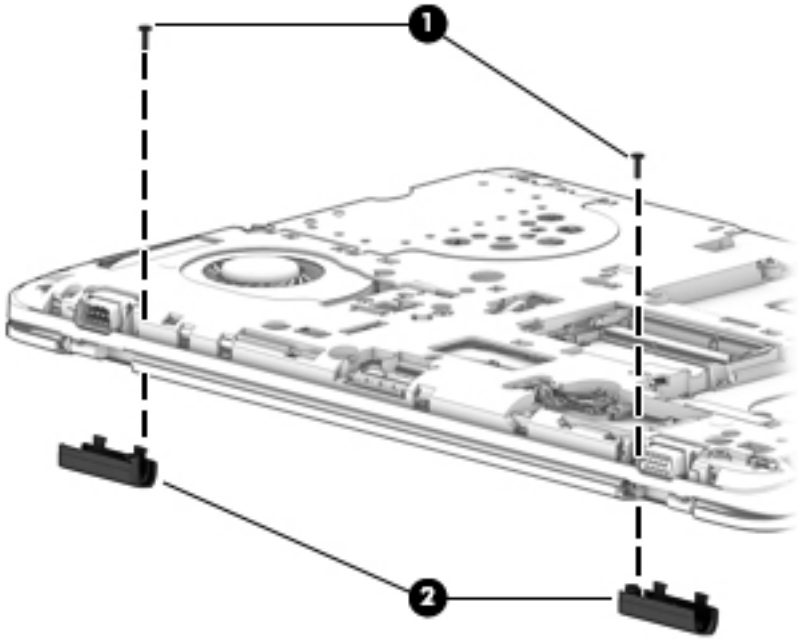

Reverse this procedure to replace the hinge covers.

Base enclosure

IMPORTANT: Make special note of each screw and screw lock size and location during removal and replacement.

Description	Spare part number
Base enclosure	
For 14" products	840657-001
For 15" products	840725-001

Before removing the base enclosure, follow these steps:

1. Shut down the computer.
2. Disconnect all external devices connected to the computer.
3. Disconnect the power from the computer by first unplugging the power cord from the AC outlet and then unplugging the AC adapter from the computer.
4. Remove the following components:
   a. Service door (see Service door on page 37).
   b. Remove the battery (see Battery on page 38)
   c. Hard drive (see Hard drive on page 39).
   d. Solid-state drive (see Solid-state drive (select products only) on page 41).
   e. WWAN module (see WWAN module (select products only) on page 42).
   f. WLAN module (see WLAN module on page 43).
   g. Optical drive (see Optical drive on page 45).
   h. Keyboard (see Keyboard on page 47).
   i. Memory (see Memory on page 50).
   j. Hinge covers (see Hinge cover on page 53).

Remove the base enclosure:

1. Disconnect the fingerprint reader cable **(1)**, the speaker cable **(2)**, the display cable **(3)**, and the pointing stick cable **(4)**.

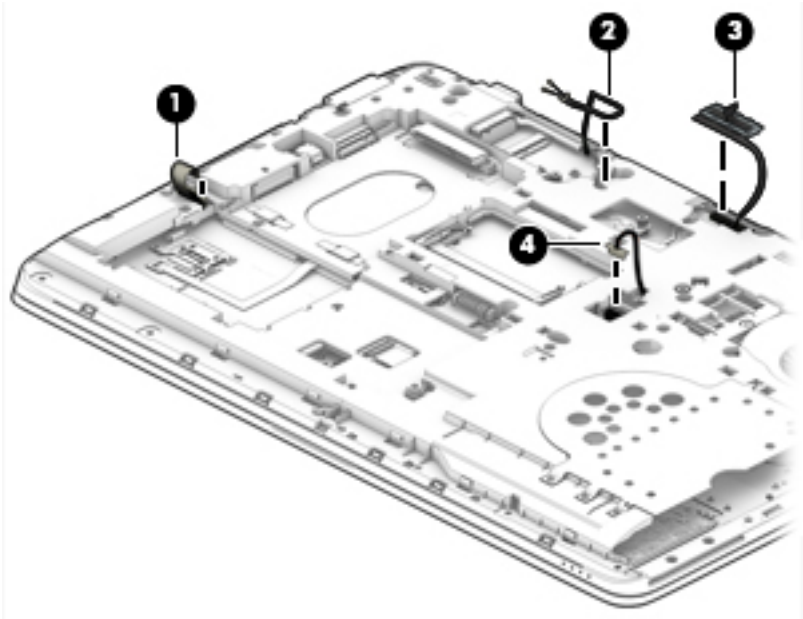

2. Remove the two M2x3L screws **(1)**, the two M2x1.5L 1 P0 screws **(2)**, 1 M2.5x8L T8 screw **(3)**, and 9 M2.6x6L T8 screws **(4)**.

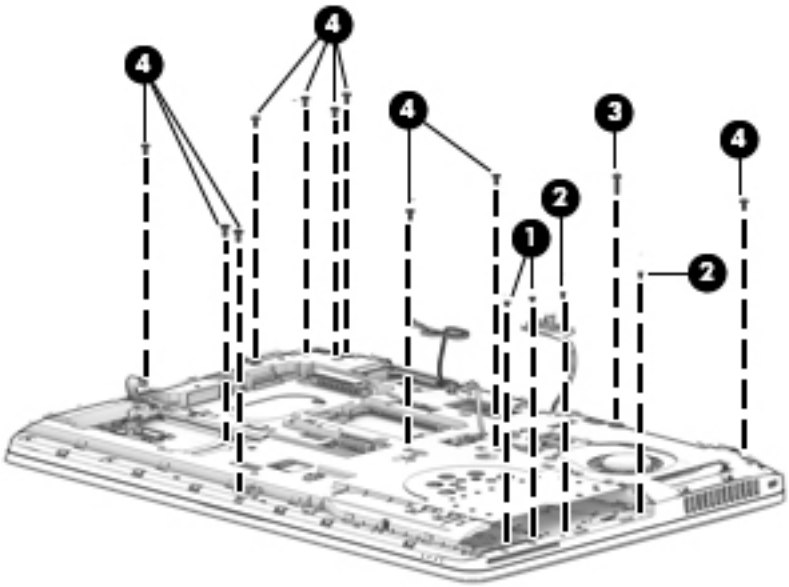

Reverse this procedure to install the base enclosure.

System board

Description	Spare part number
System board	
Discrete memory, Intel i5-7300U processor, and WWAN capability	916828-001
Discrete memory, Intel i5-7300U processor, Windows, and WWAN capability	916828-601
Discrete memory, Intel i7-7600U processor, and WWAN capability	916829-001
Discrete memory, Intel i7-7600U processor, Windows, and WWAN capability	916829-601
UMA memory, Intel i3-7100U processor	916830-001
UMA memory, Intel i3-7100U processor, and Windows	916830-601
UMA memory, Intel i3-7100U processor, and WWAN capability	916831-001
UMA memory, Intel i3-7100U processor, Windows, and WWAN capability	916831-601
UMA memory, Intel i5-7200U processor	916832-001
UMA memory, Intel i5-7200U processor, and Windows	916832-601
UMA memory, Intel i5-7200U processor, and WWAN capability	916833-001
UMA memory, Intel i5-7200U processor, Windows, and WWAN capability	916833-601
UMA memory, Intel i5-7300U processor, and WWAN capability	916834-001
UMA memory, Intel i5-7300U processor, Windows, and WWAN capability	916834-601
UMA memory, Intel i7-7600U processor, and WWAN capability	916835-001
UMA memory, Intel i7-7600U processor, Windows, and WWAN capability	916835-601
UMA memory, Inteli 5-7440HQ processor, and WWAN capability	918109-001
UMA memory, Intel i5-7440HQ processor, Windows, and WWAN capability	918109-601
UMA memory, Inte li7-7820HQ processor, and WWAN capability	918110-001
UMA memory, Inte li7-7820HQ processor, Windows, and WWAN capability	918110-601

IMPORTANT: Make special note of each screw and screw lock size and location during removal and replacement

Before removing the system board, follow these steps:

1. Shut down the computer.
2. Disconnect all external devices connected to the computer.
3. Disconnect the power from the computer by first unplugging the power cord from the AC outlet and then unplugging the AC adapter from the computer.
4. Remove the following components:
   a. Service door (see Service door on page 37).
   b. Battery (see Battery on page 38).
   c. Hard drive (see Hard drive on page 39).

d. Solid-state drive (see Solid-state drive (select products only) on page 41).

e. WWAN module (see WWAN module (select products only) on page 42).

f. WLAN module (see WLAN module on page 43).

g. Optical drive (see Optical drive on page 45).

h. Keyboard (see Keyboard on page 47).

i. Hinge covers (see Hinge cover on page 53).

j. Base enclosure (see Base enclosure on page 55).

Remove the system board:

1. Disconnect the RTC battery cable **(2)** and the power button board cable **(2)**.

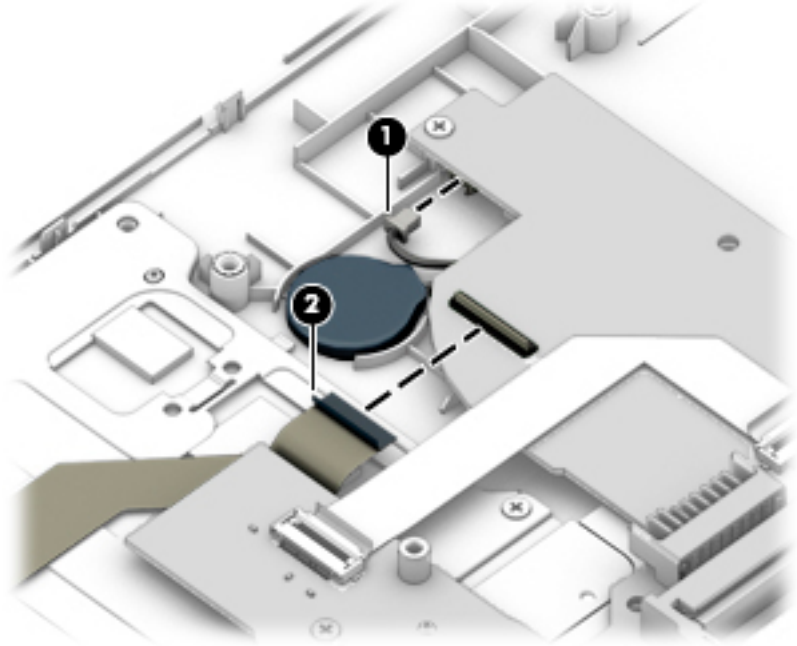

2. Loosen 3 P1 captive screws **(1)** on the fan, remove 4 M2x3L P1 screws **(2)** from the system board, and remove 2 M2x3L screws from the ODD board **(3)**.

3. Lift the system board **(4)**, and then remove it **(5)**.

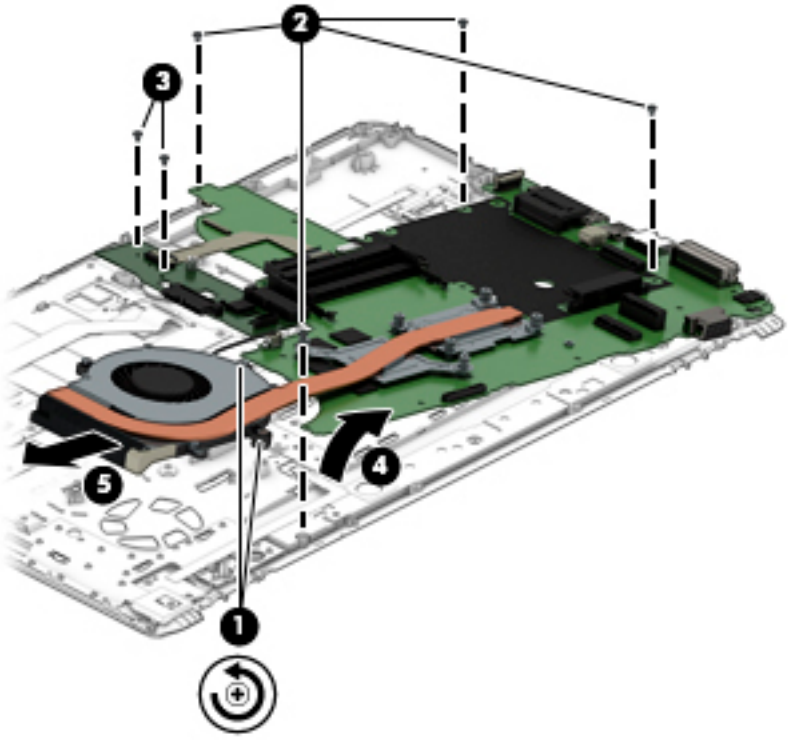

Reverse this procedure to install the system board.

Fan and heat sink assembly

Description	Spare part number
Fan and heat sink assembly	
For 14" products with integrated graphics	840662-001
For 15" products with integrated graphics	840732-001
For 15" products with high-quality integrated graphics (select products only)	920191-001

IMPORTANT: Make special note of each screw and screw lock size and location during removal and replacement

Before removing the fan and heat sink, follow these steps:

1. Shut down the computer.
2. Disconnect all external devices connected to the computer.
3. Disconnect the power from the computer by first unplugging the power cord from the AC outlet and then unplugging the AC adapter from the computer.
4. Remove the following components:
   a. Service door (see Service door on page 37).
   b. Remove the battery (see Battery on page 38)

c. Hard drive (see Hard drive on page 39).

d. Solid-state drive (see Solid-state drive (select products only) on page 41).

e. WWAN module (see WWAN module (select products only) on page 42).

f. WLAN module (see WLAN module on page 43).

g. Optical drive (see Optical drive on page 45).

h. Keyboard (see Keyboard on page 47).

i. Hinge covers (see Hinge cover on page 53).

j. Base enclosure (see Base enclosure on page 55).

k. System board (see System board on page 57).

To remove the fan and heat sink assembly for products with discrete graphics:

1. Disconnect the cable **(1)** from the system board.
2. Loosen 6 Phillips captive screws **(2)**.
3. Lift the fan and heat sink assembly **(3)** to remove it .

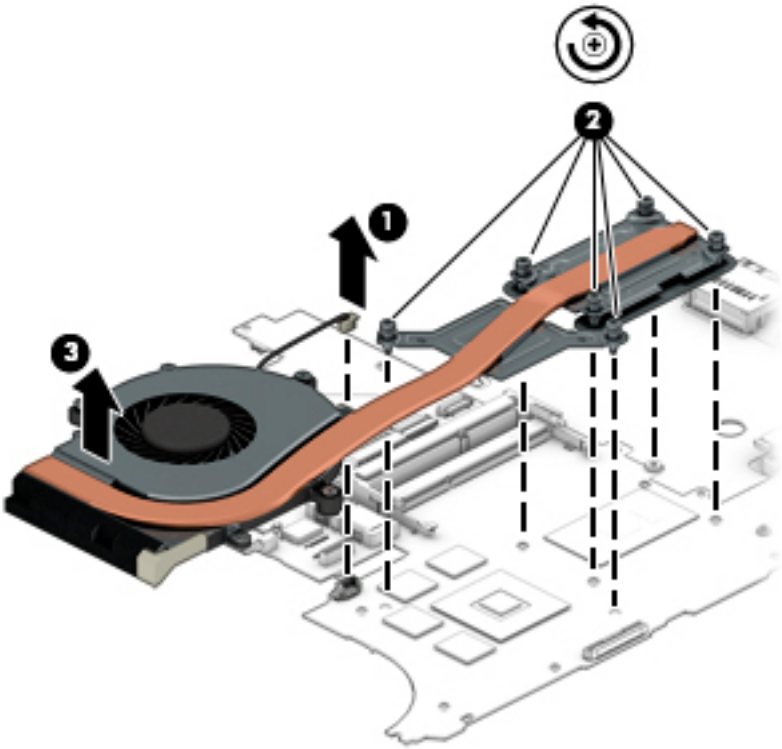

To remove the fan and heat sink assembly for products with integrated graphics:

1. Disconnect the cable **(1)** from the system board.
2. Loosen 4 Phillips captive screws **(2)**.

3. Lift the fan and heat sink assembly **(3)** to remove it.

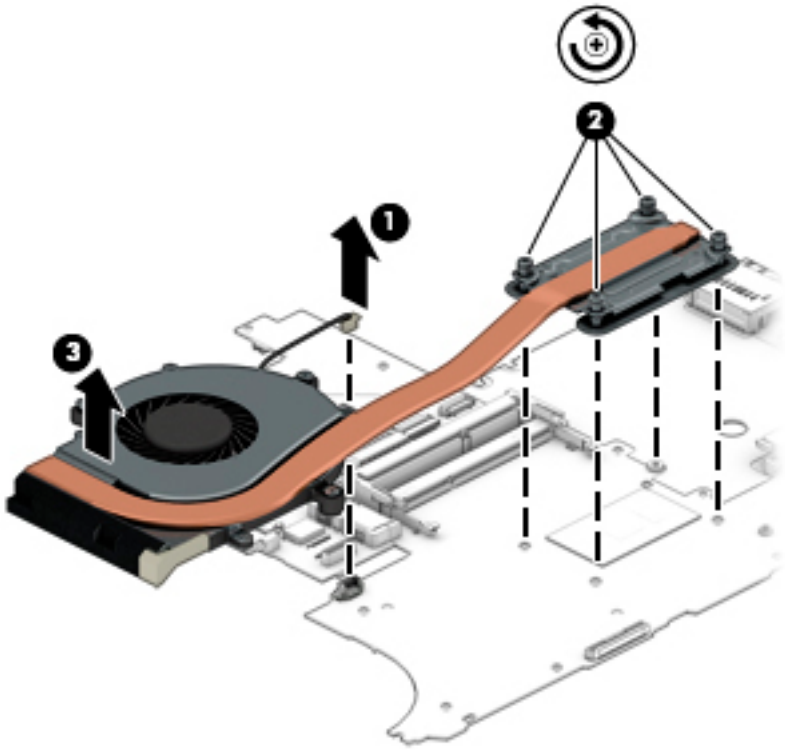

Reverse this procedure to install the fan and heat sink assembly.

Optical drive board

Description	Spare part number
Optical drive board	
For products with an optical drive	840745-001
For products with an optical drive and a serial port (select products only)	840746-001

IMPORTANT: Make special note of each screw and screw lock size and location during removal and replacement

Before removing the optical drive board, follow these steps:

1. Shut down the computer.
2. Disconnect all external devices connected to the computer.
3. Disconnect the power from the computer by first unplugging the power cord from the AC outlet and then unplugging the AC adapter from the computer.
4. Remove the following components:
   a. Service door (see Service door on page 37).
   b. Remove the battery (see Battery on page 38)
   c. Hard drive (see Hard drive on page 39).
   d. Solid-state drive (see Solid-state drive (select products only) on page 41).
   e. WWAN module (see WWAN module (select products only) on page 42).
   f. WLAN module (see WLAN module on page 43).
   g. Optical drive (see Optical drive on page 45).
   h. Keyboard (see Keyboard on page 47).
   i. Hinge covers (see Hinge cover on page 53).
   j. Base enclosure (see Base enclosure on page 55).
   k. System board (see System board on page 57).
   l. Fan/heat sink assembly (see Fan and heat sink assembly on page 59).

Remove the optical drive board:

▲ Disconnect the optical drive board cable **(1)**, and then remove the optical drive board **(2)**.

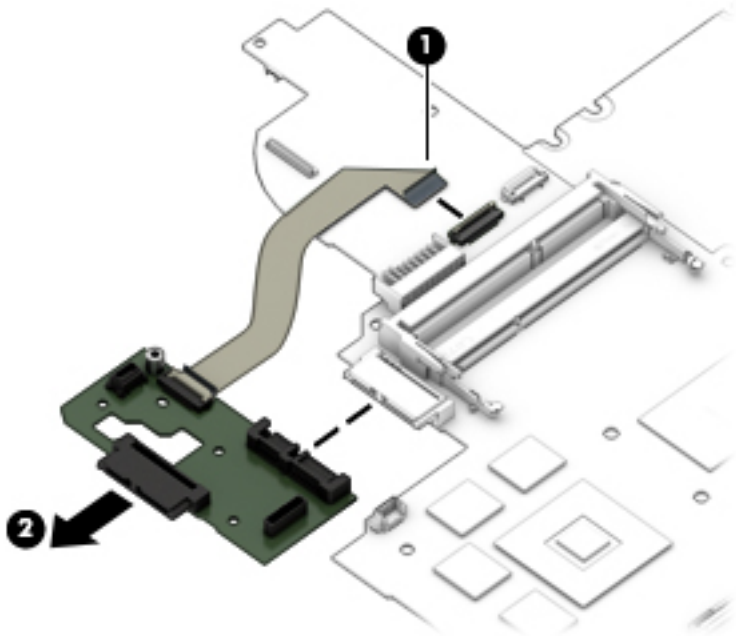

Reverse this procedure to install the optical drive board.

Top cover and TouchPad

NOTE: The top cover spare part kit includes the TouchPad.

Description	Spare part number
Top cover (includes TouchPad)	
Top cover for 14" products with a TouchPad	840719-001
Top cover for 14" products with a TouchPad	840720-001
Top cover for 14" products with a TouchPad, TouchPad on/off button, and bracket	840721-001
Top cover for 14" products with a TouchPad, TouchPad on/off button, and bracket	845170-001
Top cover for 15" products with a TouchPad	840751-001
Top cover for 15" products with a TouchPad and pointing stick	840752-001
Top cover for 15" products with a TouchPad, TouchPad on/off button, and bracket	840753-001
Top cover for 15" products with a TouchPad, TouchPad on/off button, pointing stick, and bracket	845172-001

IMPORTANT: Make special note of each screw and screw lock size and location during removal and replacement

Before removing the top cover, follow these steps:

1. Shut down the computer.
2. Disconnect all external devices connected to the computer.

3. Disconnect the power from the computer by first unplugging the power cord from the AC outlet and then unplugging the AC adapter from the computer.
4. Remove the following components:
   a. Service door (see Service door on page 37).
   b. Remove the battery (see Battery on page 38)
   c. Hard drive (see Hard drive on page 39).
   d. Solid-state drive (see Solid-state drive (select products only) on page 41).
   e. WWAN module (see WWAN module (select products only) on page 42).
   f. WLAN module (see WLAN module on page 43).
   g. Optical drive (see Optical drive on page 45).
   h. Keyboard (see Keyboard on page 47).
   i. Hinge covers (see Hinge cover on page 53).
   j. Base enclosure (see Base enclosure on page 55).
   k. System board (see System board on page 57).
   l. Fan/heat sink assembly (see Fan and heat sink assembly on page 59).

Remove the top cover:

1. If the computer is equipped with a pointing stick (select products only), remove 2 M2x1.5L P0 pointing stick screws.

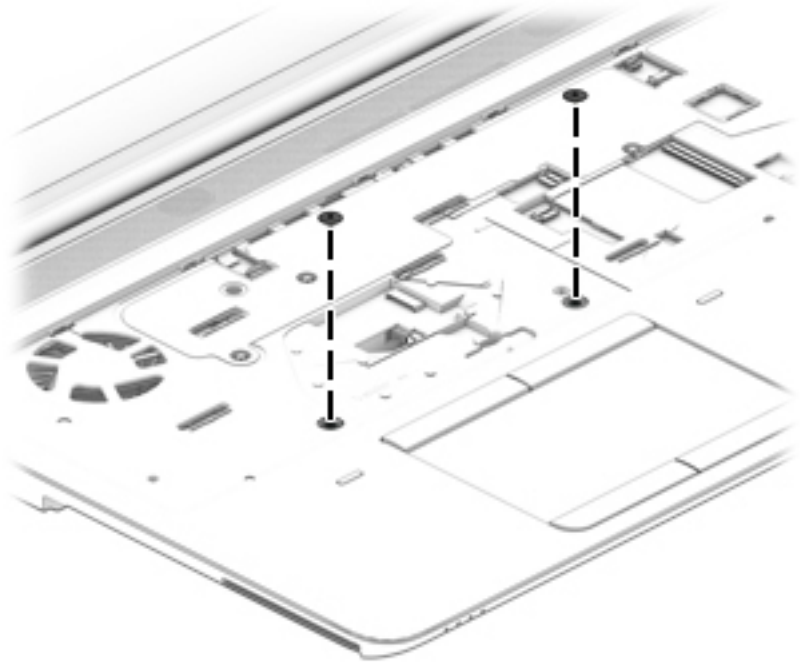

2. Turn the computer over, and then disconnect the power button board cable **(1)**, the speaker cable **(2)**, and the fingerprint reader board cable **(3)**.

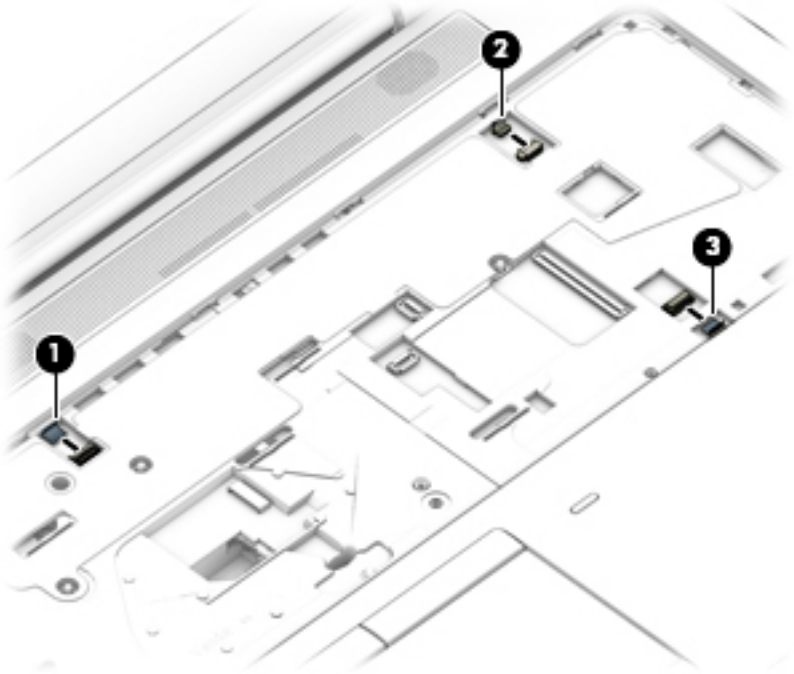

3. Carefully disconnect the plastic clips **(1)** on the front edge, and then remove the top cover **(1)**.

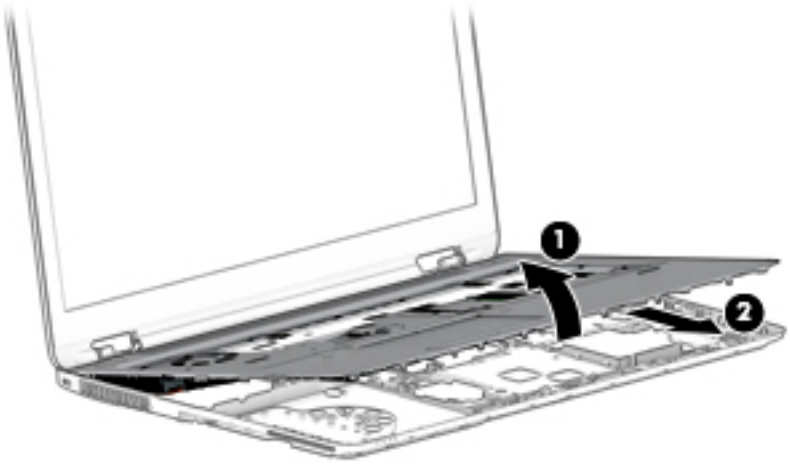

Reverse this procedure to install the top cover.

To remove the TouchPad:

1. Disconnect the TouchPad cables **(1)** and **(2)**.

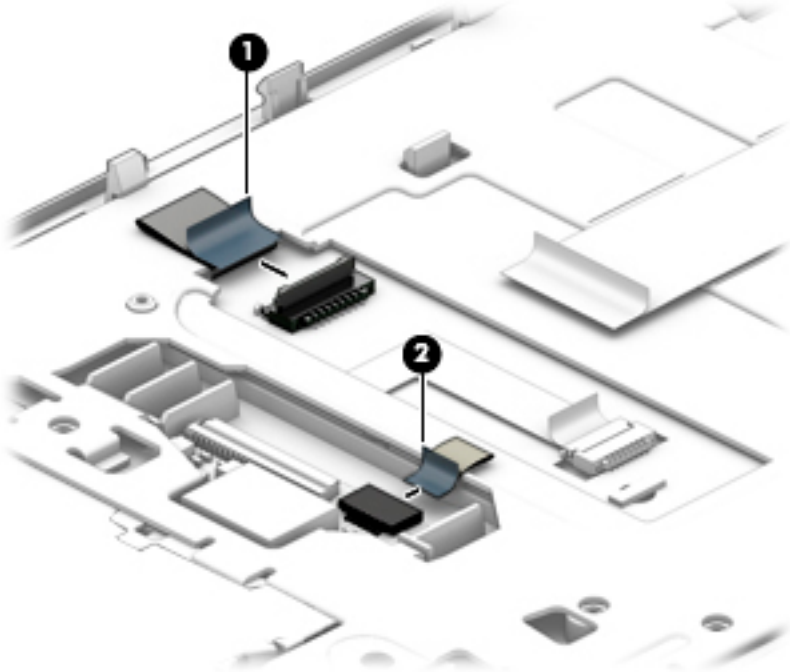

2. Remove 4 Phillips screws **(1)**, and then lift the TouchPad bracket **(2)** to remove it.

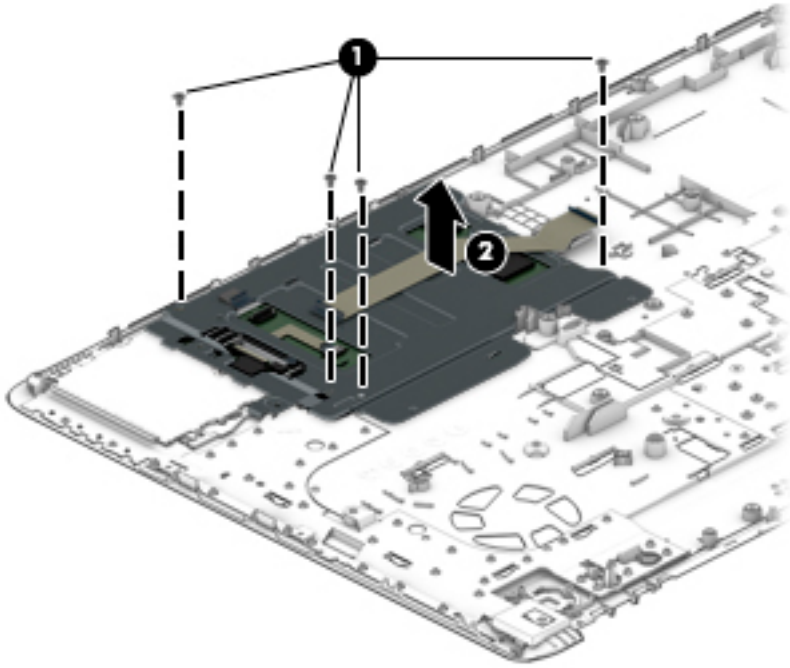

RTC battery

Description	Spare part number
RTC battery	651948-001

IMPORTANT: Make special note of each screw and screw lock size and location during removal and replacement

Before removing the RTC battery, follow these steps:

1. Shut down the computer.
2. Disconnect all external devices connected to the computer.
3. Remove the following components:
   a. Service door (see Service door on page 37).
   b. Remove the battery (see Battery on page 38)
   c. Hard drive (see Hard drive on page 39).
   d. Solid-state drive (see Solid-state drive (select products only) on page 41).
   e. WWAN module (see WWAN module (select products only) on page 42).
   f. WLAN module (see WLAN module on page 43).
   g. Optical drive (see Optical drive on page 45).
   h. Keyboard (see Keyboard on page 47).
   i. Hinge covers (see Hinge cover on page 53).
   j. Base enclosure (see Base enclosure on page 55).
   k. System board (see System board on page 57).
   l. Fan/heat sink assembly (see Fan and heat sink assembly on page 59).
   m. Top cover (see Top cover and TouchPad on page 63).

To remove the RTC battery:

▲ If not already disconnected, disconnect the cable, and then remove the RTC battery.

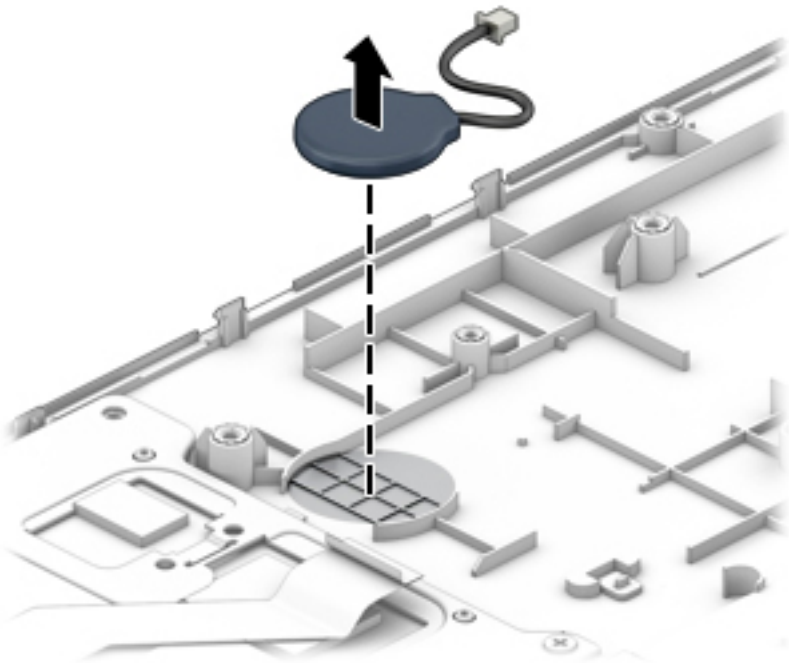

Reverse this procedure to install the RTC battery.

Speaker

NOTE: The speaker spare part kit includes the speaker cable.

Description	Spare part number
Speaker Kit	840700-001

IMPORTANT: Make special note of each screw and screw lock size and location during removal and replacement

Before removing the speaker, follow these steps:

1. Shut down the computer.
2. Disconnect all external devices connected to the computer.
3. Disconnect the power from the computer by first unplugging the power cord from the AC outlet and then unplugging the AC adapter from the computer.
4. Remove the following components:
   a. Service door (see Service door on page 37).
   b. Remove the battery (see Battery on page 38)
   c. Hard drive (see Hard drive on page 39).
   d. Solid-state drive (see Solid-state drive (select products only) on page 41).
   e. WWAN module (see WWAN module (select products only) on page 42).
   f. WLAN module (see WLAN module on page 43).
   g. Optical drive (see Optical drive on page 45).
   h. Keyboard (see Keyboard on page 47).
   i. Hinge covers (see Hinge cover on page 53).
   j. Base enclosure (see Base enclosure on page 55).
   k. System board (see System board on page 57).
   l. Fan/heat sink assembly (see Fan and heat sink assembly on page 59).
   m. Top cover (see Top cover and TouchPad on page 63).

Remove the speaker:

1. Disconnect the speaker cable **(1)**...
2. Remove 2 Phillips screws **(2)**.

3. Lift the speaker assembly to remove it.**(3)**.

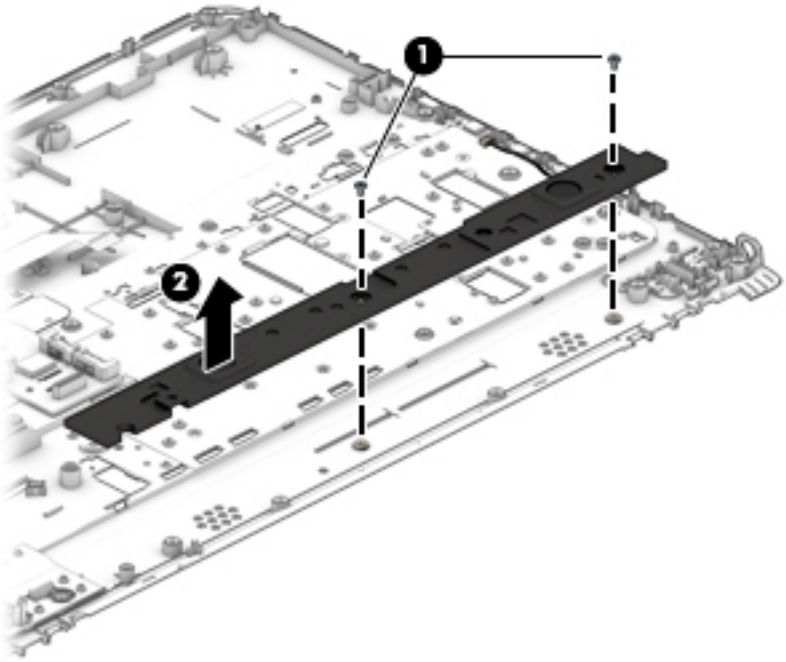

Reverse this procedure to install the speaker.

Power button board

NOTE: The power button board spare part kit includes the cable.

Description	Spare part number
Power button board	
For 14" products	840693-001
For 15" products	840744-001

IMPORTANT: Make special note of each screw and screw lock size and location during removal and replacement.

Before removing the power button board, follow these steps:

1. Shut down the computer.
2. Disconnect all external devices connected to the computer.
3. Remove the following components:
   a. Service door (see Service door on page 37).
   b. Remove the battery (see Battery on page 38)
   c. Hard drive (see Hard drive on page 39).
   d. Solid-state drive (see Solid-state drive (select products only) on page 41).
   e. WWAN module (see WWAN module (select products only) on page 42).

f. WLAN module (see WLAN module on page 43).

g. Optical drive (see Optical drive on page 45).

h. Keyboard (see Keyboard on page 47).

i. Hinge covers (see Hinge cover on page 53).

j. Base enclosure (see Base enclosure on page 55).

k. System board (see System board on page 57).

l. Fan/heat sink assembly (see Fan and heat sink assembly on page 59).

m. Top cover (see Top cover and TouchPad on page 63).

Remove the power button board:

▲ Remove the 2 M2x3L, P1 screws **(1)**, release the power button power button board cable **(2)**, and them remove the power button board **(3)**:

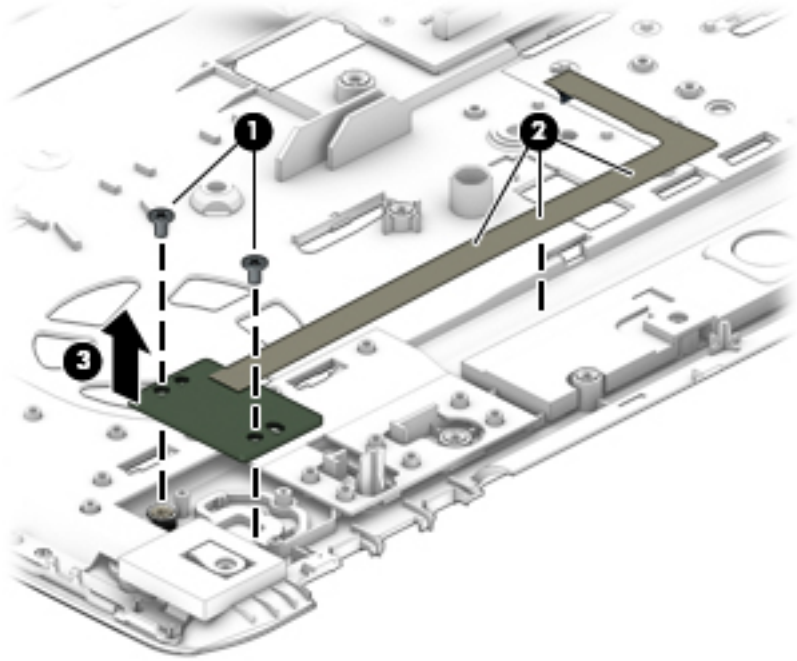

Reverse this procedure to install the power button board.

Fingerprint reader (select products only)

NOTE: The fingerprint reader spare part kit includes the cable

Description	Spare part number
Fingerprint reader	
For 14" products	840664-001
For 15" products	840735-001

IMPORTANT: Make special note of each screw and screw lock size and location during removal and replacement

Before removing the fingerprint reader, follow these steps:

1. Shut down the computer.
2. Disconnect all external devices connected to the computer.
3. Disconnect the power from the computer by first unplugging the power cord from the AC outlet and then unplugging the AC adapter from the computer.
4. Remove the following components:
   a. Service door (see Service door on page 37).
   b. Remove the battery (see Battery on page 38)
   c. Hard drive (see Hard drive on page 39).
   d. Solid-state drive (see Solid-state drive (select products only) on page 41).
   e. WWAN module (see WWAN module (select products only) on page 42).
   f. WLAN module (see WLAN module on page 43).
   g. Optical drive (see Optical drive on page 45).
   h. Keyboard (see Keyboard on page 47).
   i. Hinge covers (see Hinge cover on page 53).
   j. Base enclosure (see Base enclosure on page 55).
   k. System board (see System board on page 57).
   l. Fan/heat sink assembly (see Fan and heat sink assembly on page 59).
   m. Top cover (see Top cover and TouchPad on page 63).

Remove the fingerprint reader:

1. Remove the Phillips screw from the fingerprint reader bracket**(1)**.
2. Remove the bracket**(2)**.

3. Remove the cable **(3)**, and then remove the fingerprint reader **(4)**.

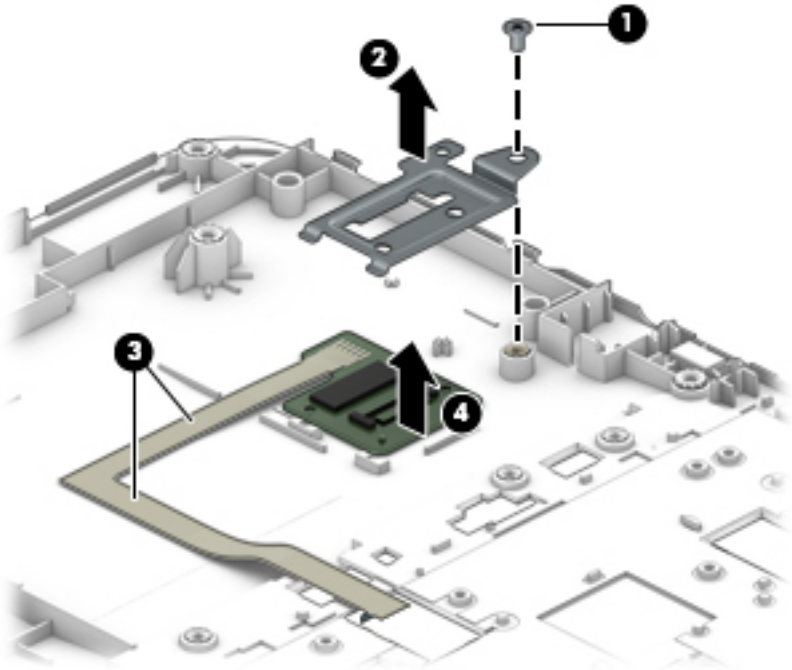

Reverse this procedure to install the fingerprint reader.

Smart card reader

NOTE: The smart card reader spare part kit includes the metal shield

Description	Spare part number
Smart card reader board (includes metal shield)	
For 14” products	920194-001
For 15” products	920193-001

IMPORTANT: Make special note of each screw and screw lock size and location during removal and replacement

Before removing the smart card reader, follow these steps:

1. Shut down the computer.
2. Disconnect all external devices connected to the computer.
3. Disconnect the power from the computer by first unplugging the power cord from the AC outlet and then unplugging the AC adapter from the computer.
4. Remove the following components:
   a. Service door (see Service door on page 37).
   b. Remove the battery (see Battery on page 38)
   c. Hard drive (see Hard drive on page 39).

d. Solid-state drive (see Solid-state drive (select products only) on page 41).

e. WWAN module (see WWAN module (select products only) on page 42).

f. WLAN module (see WLAN module on page 43).

g. Optical drive (see Optical drive on page 45).

h. Keyboard (see Keyboard on page 47).

i. Hinge covers (see Hinge cover on page 53).

j. Base enclosure (see Base enclosure on page 55).

k. System board (see System board on page 57).

l. Fan/heat sink assembly (see Fan and heat sink assembly on page 59).

m. Top cover (see Top cover and TouchPad on page 63).

Remove the smart card reader:

▲ Remove the metal shield, and then lift the smart card reader to remove it.

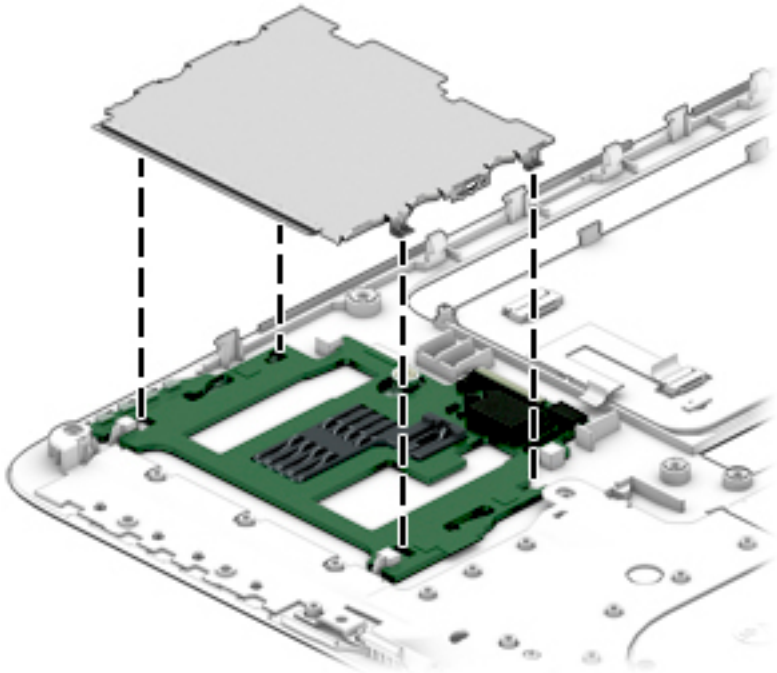

Reverse this procedure to install the smart card reader.

Near Field Communication module

Description	Spare part number
Near Field Communication (NFC) module	840695-001
Near Field Communication (NFC) cable	
For 14" products	840661-001
For 15" products	840729-001

IMPORTANT: Make special note of each screw and screw lock size and location during removal and replacement

Before removing the NFC module, follow these steps:

1. Turn off the computer. If you are unsure whether the computer is off or in Hibernation, turn the computer on, and then shut it down through the operating system.
2. Disconnect the power from the computer by unplugging the power cord from the computer.
3. Disconnect all external devices from the computer.
4. Remove the following components:
   a. Service door (see Service door on page 37).
   b. Remove the battery (see Battery on page 38)
   c. Hard drive (see Hard drive on page 39).
   d. Solid-state drive (see Solid-state drive (select products only) on page 41).
   e. WWAN module (see WWAN module (select products only) on page 42).
   f. WLAN module (see WLAN module on page 43).
   g. Optical drive (see Optical drive on page 45).
   h. Keyboard (see Keyboard on page 47).
   i. Hinge covers (see Hinge cover on page 53).
   j. Base enclosure (see Base enclosure on page 55).
   k. System board (see System board on page 57).
   l. Fan/heat sink assembly (see Fan and heat sink assembly on page 59).
   m. Top cover (see Top cover and TouchPad on page 63).

Remove the NFC module:

▲ Disconnect the NFC module **(1)**, and then remove it **(2)**.

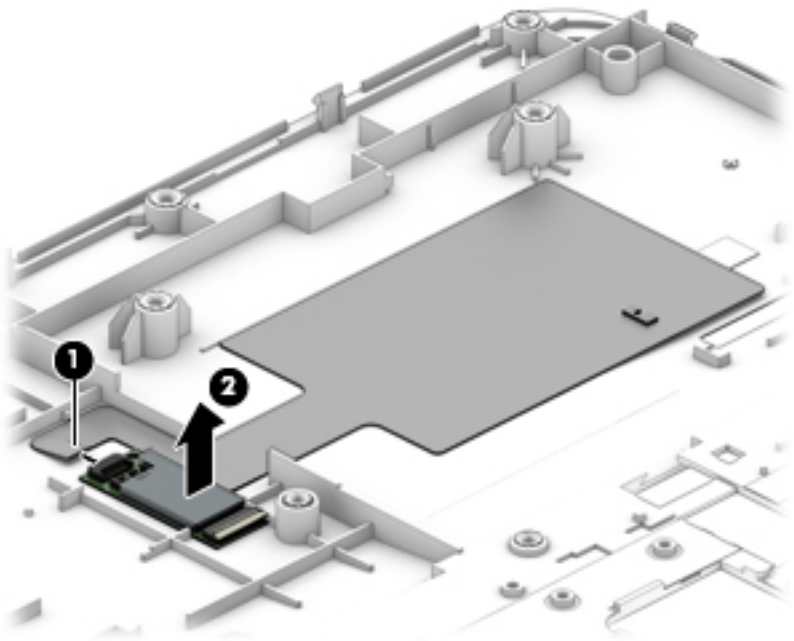

Reverse this procedure to replace the panel.

Audio board

Description	Spare part number
Audio board	917458-001

IMPORTANT: Make special note of each screw and screw lock size and location during removal and replacement

Before removing the audio board, follow these steps:

1. Turn off the computer. If you are unsure whether the computer is off or in Hibernation, turn the computer on, and then shut it down through the operating system.
2. Disconnect the power from the computer by unplugging the power cord from the computer.
3. Disconnect all external devices from the computer.
4. Remove the following components:
   a. Service door (see Service door on page 37).
   b. Remove the battery (see Battery on page 38)
   c. Hard drive (see Hard drive on page 39).
   d. Solid-state drive (see Solid-state drive (select products only) on page 41).
   e. Optical drive (see Optical drive on page 45).
   f. Keyboard (see Keyboard on page 47).
   g. Hinge covers (see Hinge cover on page 53).
   h. Base enclosure (see Base enclosure on page 55).
   i. System board (see System board on page 57).
   j. Fan/heat sink assembly (see Fan and heat sink assembly on page 59).
   k. Top cover (see Top cover and TouchPad on page 63).

Remove the audio board:

▲ Remove 2 M2x3L P1 screws **(1)**, and then remove the audio board **(2)**.

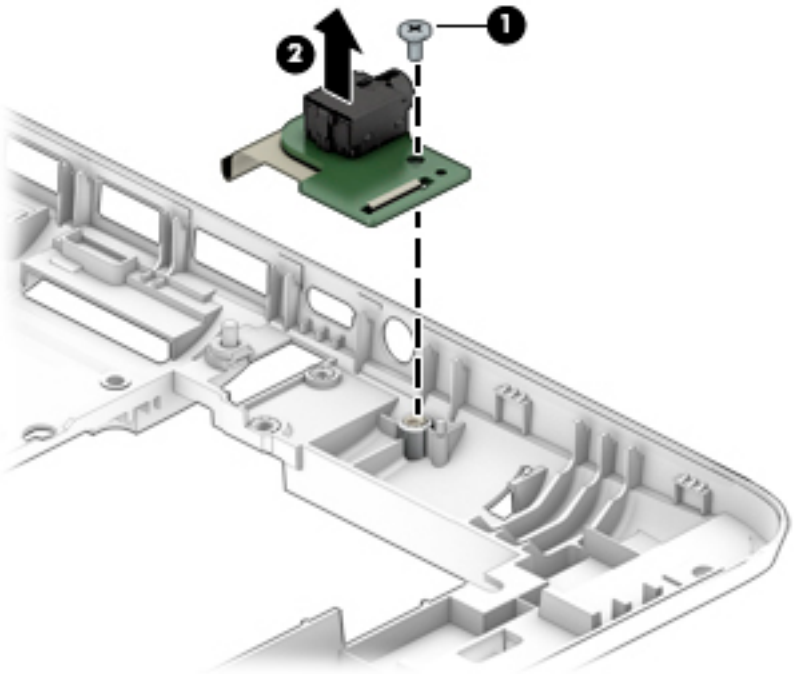

Reverse this procedure to replace the audio board.

Serial board

Description	Spare part number
Serial board (select products only)	840746-001

IMPORTANT: Make special note of each screw and screw lock size and location during removal and replacement

Before removing the serial board, follow these steps:

1. Turn off the computer. If you are unsure whether the computer is off or in Hibernation, turn the computer on, and then shut it down through the operating system.
2. Disconnect the power from the computer by unplugging the power cord from the computer.
3. Disconnect all external devices from the computer.
4. Remove the following components:
   a. Service door (see Service door on page 37).
   b. Remove the battery (see Battery on page 38)
   c. Hard drive (see Hard drive on page 39).
   d. Solid-state drive (see Solid-state drive (select products only) on page 41).
   e. WWAN module (see WWAN module (select products only) on page 42).
   f. WLAN module (see WLAN module on page 43).
   g. Optical drive (see Optical drive on page 45).
   h. Keyboard (see Keyboard on page 47).
   i. Hinge covers (see Hinge cover on page 53).
   j. Base enclosure (see Base enclosure on page 55).
   k. System board (see System board on page 57).
   l. Fan/heat sink assembly (see Fan and heat sink assembly on page 59).
   m. Top cover (see Top cover and TouchPad on page 63).

Remove the serial board:

▲ Remove 2 M2x3L P1 screws**(1)**, remove the cable from the routing channels **(2)**, and then remove the serial board **(3)**.

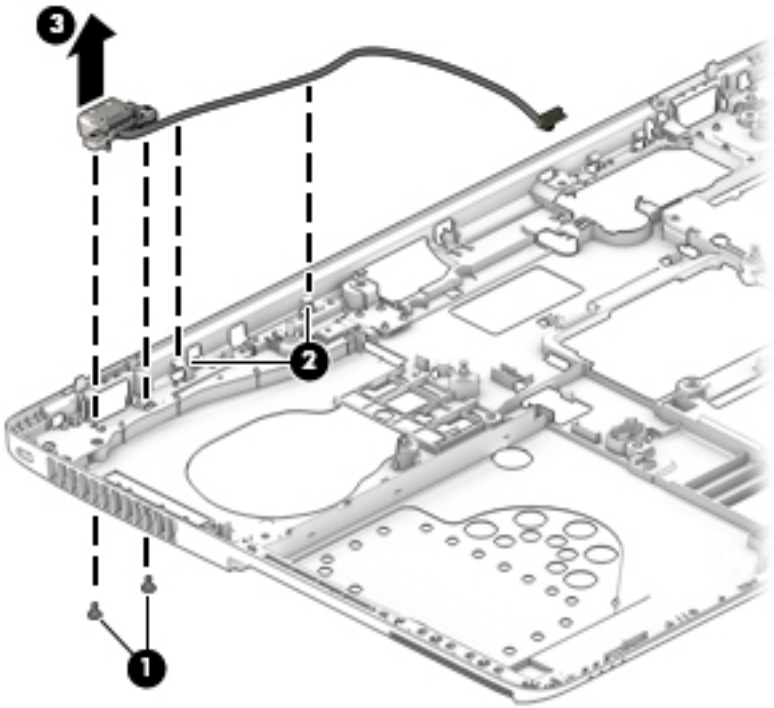

Reverse this procedure to replace the serial board.

Display assembly

All display assemblies include WLAN antenna transceivers and cables. WWAN models also include 2 WWAN antenna transceivers and cables.

Full hinge-up displays are not spared.

This section describes removing components that do not require that you entirely remove the display assembly from the computer. You can remove the display bezel, webcam/microphone module, and display panel with the display assembly still attached to the computer.

To remove the remaining display components, including the display brackets, antennas, and enclosure, you must remove the entire display assembly from the computer. See Display assembly subcomponents on page 27 for more information about removing the remaining components.

Description	Spare part number
Display panel ([14.0-in], anti-glare, LED)	
Slim panel for 14" products	806860-009
	919315-001
Touch screen for 14" products (with camera and WWAN capability)	917521-001
Slim panel for 15" products	721363-017
	919316-001
Touch screen for 15" products (with camera and WWAN capability)	917522-001
Display bezel	
For 14" HP 640 products	840658-001
For 15" HP 650 products	840726-001
Webcam	800575-020

Before removing the display panel, follow these steps:

1. Shut down the computer. If you are unsure whether the computer is off or in Hibernation, turn the computer on, and then shut it down through the operating system.
2. Disconnect all external devices connected to the computer.
3. Disconnect the power from the computer by first unplugging the power cord from the AC outlet, and then unplugging the AC adapter from the computer.
4. Remove the service door (see Service door on page 37).
5. Remove the battery (see Battery on page 38).
6. Remove the battery (see Battery on page 38)
7. Hard drive (see Hard drive on page 39).
8. Solid-state drive (see Solid-state drive (select products only) on page 41).
9. WWAN module (see WWAN module (select products only) on page 42).
10. WLAN module (see WLAN module on page 43).
11. Optical drive (see Optical drive on page 45).

12. Keyboard (see Keyboard on page 47).
13. Hinge covers (see Hinge cover on page 53).
14. Base enclosure (see Base enclosure on page 55).
15. System board (see System board on page 57).
16. Fan/heat sink assembly (see Fan and heat sink assembly on page 59).
17. Top cover (see Top cover and TouchPad on page 63).

Remove the display assembly:

1. Position the computer upright, with the front toward you.
2. Open the computer.
3. Remove 2 screws from each hinge **(1)** and then remove the display **(2)**:

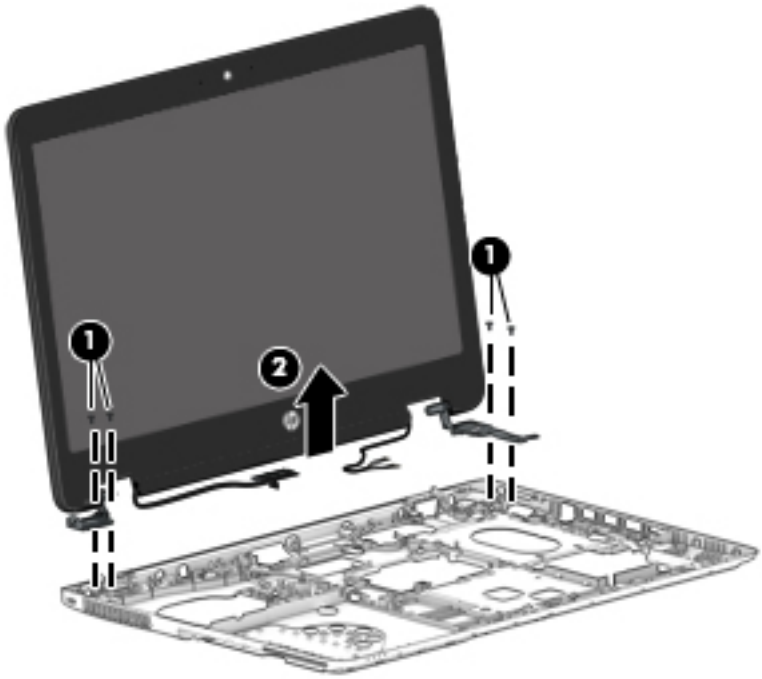

Remove the display assembly components:

1. If it is necessary to replace the display bezel:
   a. Close the computer, position it so you can access the bottom of the display, and then open the computer slightly.

b. Flex the inside edges of the top edge **(1)**, the left and right sides **(2)**, and the bottom edge **(3)** of the display bezel until the bezel disengages from the display enclosure.

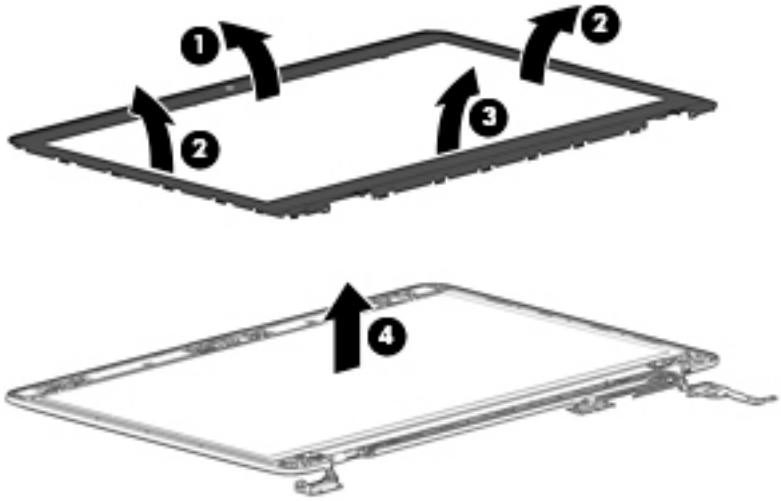

2. If it is necessary to replace the display panel:

   a. Remove the four M2x3L P1 screws that secure the display panel to the display enclosure.

   - 781959-001—**35.6-cm** (14.0-in), LED, AntiGlare display panel, UWVA
   - 784476-001—**35.6-cm** (14.0-in), LED, AntiGlare display panel, SVA HD+

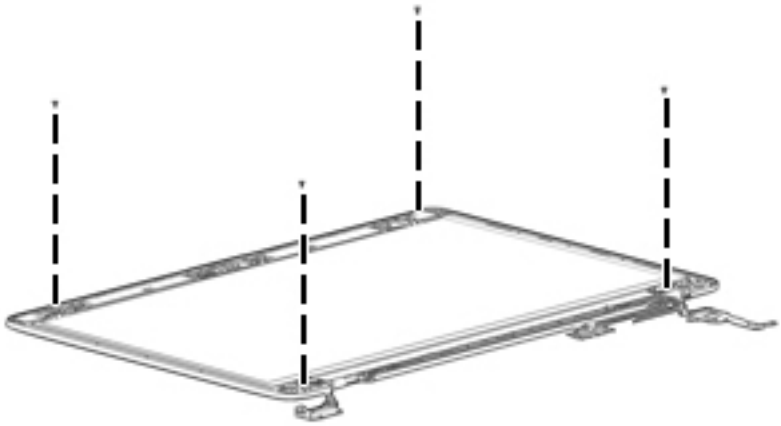

b. Rotate the top of the display panel downward **(1)** onto the keyboard.

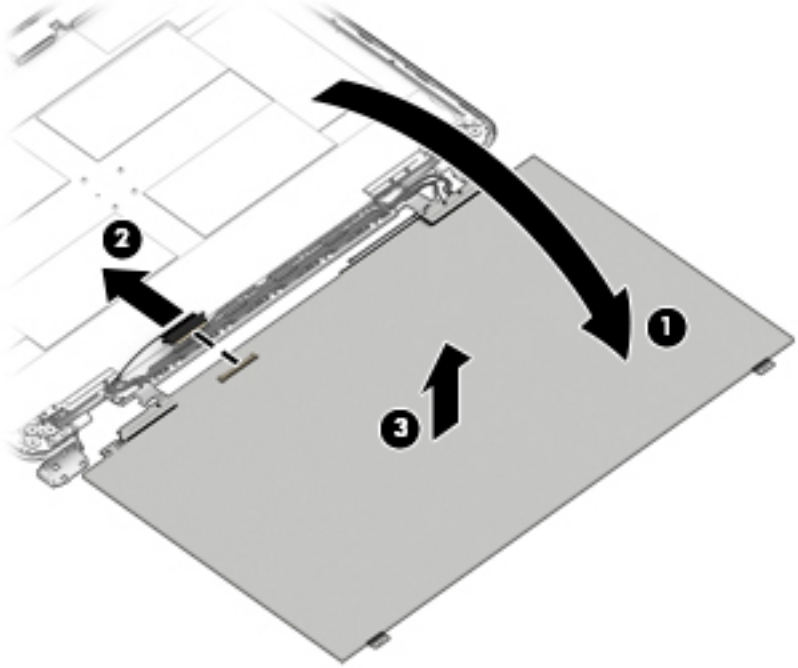

c. Disconnect the cable from the connector **(2)**, and then remove the panel **(3)**.

3. If it is necessary to replace the hinge brackets, remove the M2.5x2.5L P1 screws from each side **(1)**, and then remove the hinge brackets **(2)**.

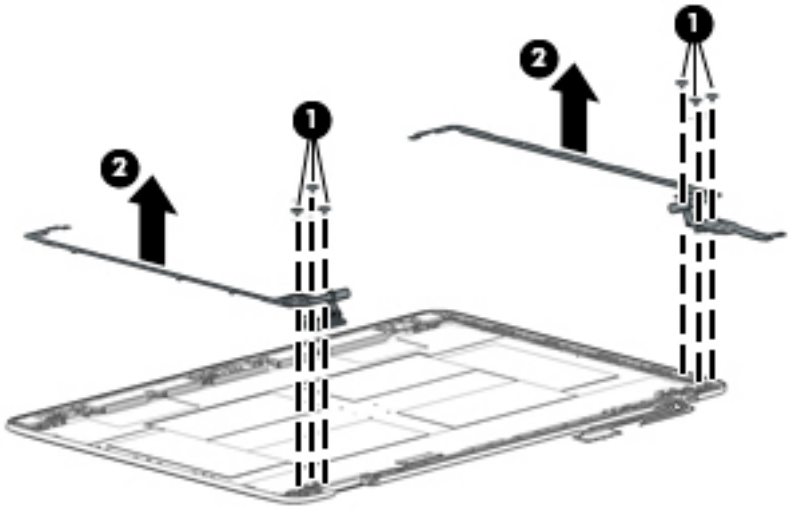

4. If it is necessary to replace the WLAN antenna cables, remove the 3 screws from each side **(1)**, and then remove the WLAN antenna cables **(2)**.

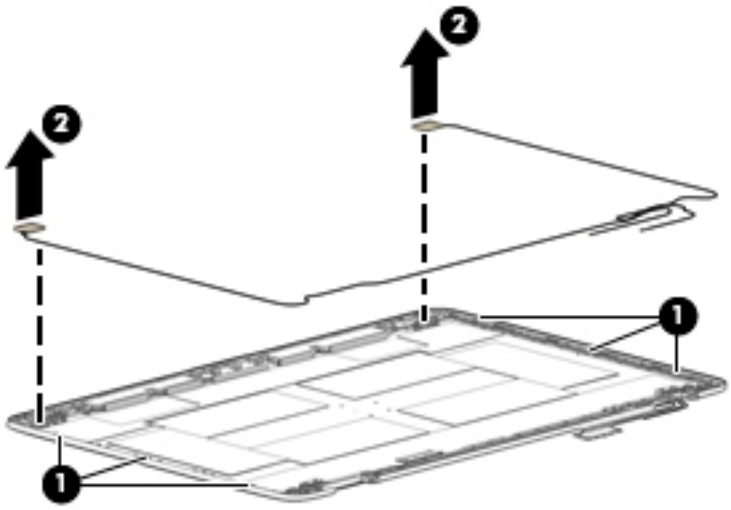

5. If it is necessary to replace the WWAN antenna cables (select products only, remove the 3 screws from each side **(1)**, and then remove the WWAN antenna cables **(2)**.

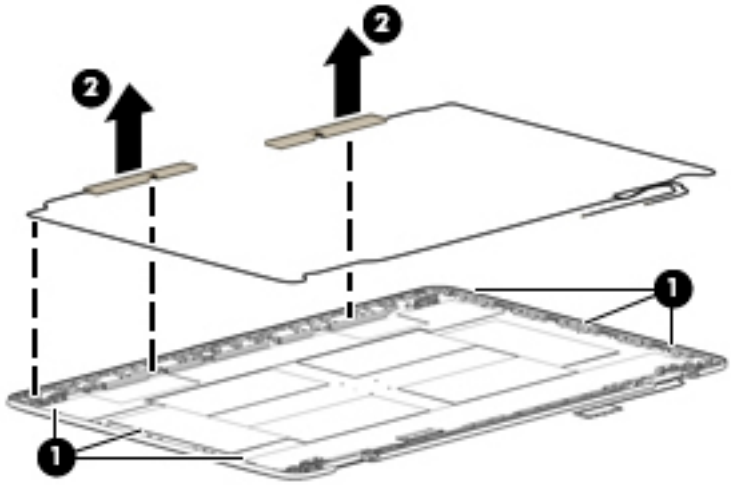

6. If it is necessary to replace the webcam:

   a. Disconnect the cable **(1)** from the webcam.

b. Detach the webcam **(2)** from the display enclosure.

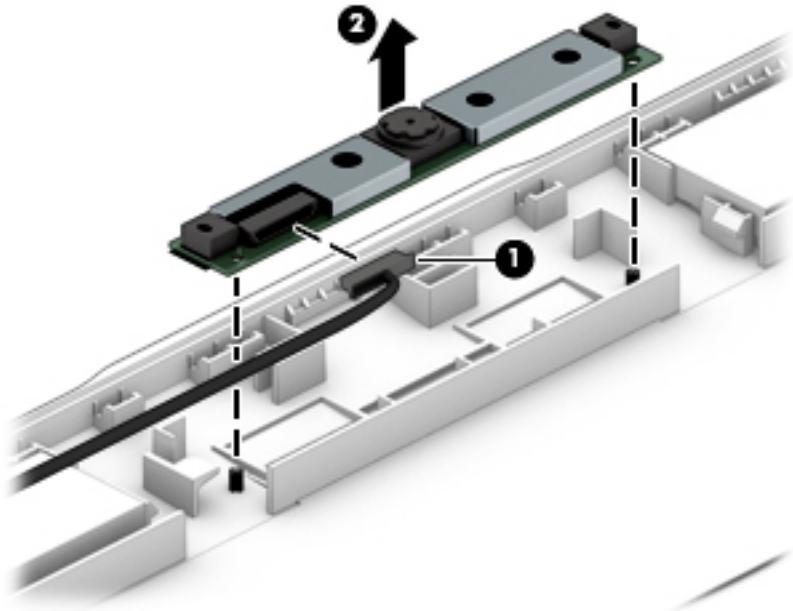

7. If it is necessary to replace the microphone board:

   a. Disconnect the cable **(1)** from the microphone board.

   b. Detach the microphone board **(2)** from the display enclosure.

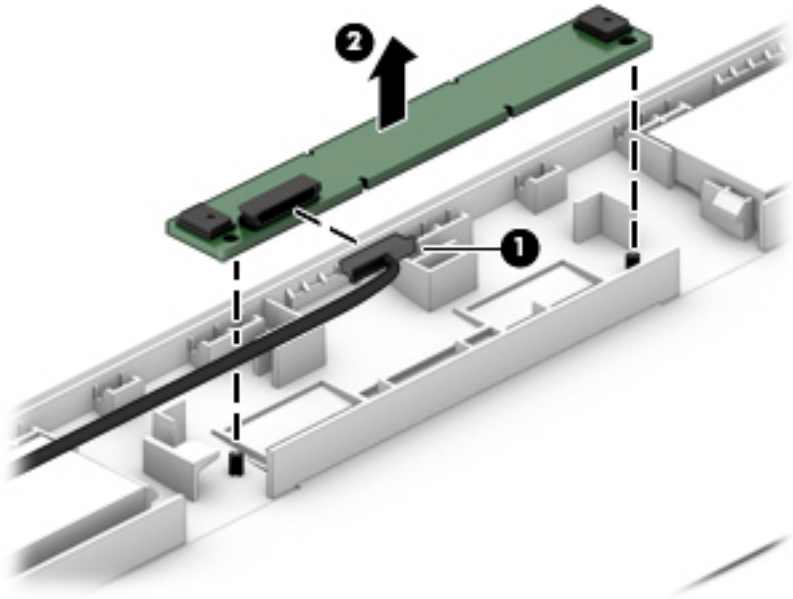

Reverse these procedures to reassemble and install the display assembly components.

6 Computer Setup (BIOS), TPM, and HP Sure Start

Using Computer Setup

Computer Setup, or Basic Input/Output System (BIOS), controls communication between all the input and output devices on the system (such as disk drives, display, keyboard, mouse, and printer). Computer Setup includes settings for the types of devices installed, the startup sequence of the computer, and the amount of system and extended memory.

NOTE: Use extreme care when making changes in Computer Setup. Errors can prevent the computer from operating properly.

Starting Computer Setup

▲ Turn on or restart the computer, and when the HP logo appears, press f10 to enter Computer Setup.

Using a USB keyboard or USB mouse to start Computer Setup (BIOS)

You can start Computer Setup by using a keyboard or mouse connected to a USB port, but you must first disable FastBoot.

1. Turn on or restart the computer, and when the HP logo appears, press f9 to enter the Boot Device Options menu.
2. Clear the check box for **Fast Boot**.
3. To save your changes and exit, select the **Save** icon in the lower-right corner of the screen, and then follow the on-screen instructions.

– or –

Select **Main**, select **Save Changes and Exit**, and then press enter.

Your changes go into effect when the computer restarts.

Navigating and selecting in Computer Setup

- To select a menu or a menu item, use the tab key and the keyboard arrow keys and then press enter, or use a pointing device to select the item.
- To scroll up and down, select the up arrow or the down arrow in the upper-right corner of the screen, or use the up arrow key or the down arrow key on the keyboard.
- To close open dialog boxes and return to the main Computer Setup screen, press esc, and then follow the on-screen instructions.

To exit Computer Setup menus, choose one of the following methods:

- To exit Computer Setup menus without saving your changes:

  Select the **Exit** icon in the lower-right corner of the screen, and then follow the on-screen instructions.

  – or –

  Select **Main**, select **Ignore Changes and Exit**, and then press enter.

- To save your changes and exit Computer Setup menus:

  Select the **Save** icon in the lower-right corner of the screen, and then follow the on-screen instructions.

  – or –

  Select **Main**, select **Save Changes and Exit**, and then press enter.

Your changes go into effect when the computer restarts.

Restoring factory settings in Computer Setup

NOTE: Restoring defaults will not change the hard drive mode.

To return all settings in Computer Setup to the values that were set at the factory, follow these steps:

1. Start Computer Setup. See Starting Computer Setup on page 86.
2. Select **Main**, and then select **Apply Factory Defaults and Exit**.

   NOTE: On select products, the selections may display **Restore Defaults** instead of **Apply Factory Defaults and Exit**.

3. Follow the on-screen instructions.
4. To save your changes and exit, select the **Save** icon in the lower-right corner of the screen, and then follow the on-screen instructions.

   – or –

   Select **Main**, select **Save Changes and Exit**, and then press enter.

Your changes go into effect when the computer restarts.

NOTE: Your password settings and security settings are not changed when you restore the factory settings.

Updating the BIOS

Updated versions of the BIOS may be available on the HP website.

Most BIOS updates on the HP website are packaged in compressed files called *SoftPaqs*.

Some download packages contain a file named Readme.txt, which contains information regarding installing and troubleshooting the file.

Determining the BIOS version

To decide whether you need to update Computer Setup (BIOS), first determine the BIOS version on your computer.

BIOS version information (also known as *ROM date* and *System BIOS*) can be accessed by pressing fn+esc (if you are already in Windows) or by using Computer Setup.

1. Start Computer Setup. See Starting Computer Setup on page 86.
2. Select **Main**, and then select **System Information**.
3. To exit Computer Setup without saving your changes, select the **Exit** icon in the lower-right corner of the screen, and then follow the on-screen instructions.

   – or –

   Select **Main**, select **Ignore Changes and Exit**, and then press enter.

To check for later BIOS versions, see Downloading a BIOS update on page 88.

Downloading a BIOS update

CAUTION: To reduce the risk of damage to the computer or an unsuccessful installation, download and install a BIOS update only when the computer is connected to reliable external power using the AC adapter. Do not download or install a BIOS update while the computer is running on battery power, docked in an optional docking device, or connected to an optional power source. During the download and installation, follow these instructions:

Do not disconnect power on the computer by unplugging the power cord from the AC outlet.

Do not shut down the computer or initiate Sleep.

Do not insert, remove, connect, or disconnect any device, cable, or cord.

1. Type `support` in the taskbar search box, and then select the HP Support Assistant app.

   – or –

   Select the question mark icon in the taskbar.
2. Select **Updates**, and then select **Check for updates and messages**.
3. Follow the on-screen instructions.
4. At the download area, follow these steps:
   a. Identify the most recent BIOS update and compare it to the BIOS version currently installed on your computer. Make a note of the date, name, or other identifier. You may need this information to locate the update later, after it has been downloaded to your hard drive.
   b. Follow the on-screen instructions to download your selection to the hard drive.

      Make a note of the path to the location on your hard drive where the BIOS update is downloaded. You will need to access this path when you are ready to install the update.

NOTE: If you connect your computer to a network, consult the network administrator before installing any software updates, especially system BIOS updates.

BIOS installation procedures vary. Follow any instructions that are displayed on the screen after the download is complete. If no instructions are displayed, follow these steps:

1. Type `file` in the taskbar search box, and then select **File Explorer**.
2. Select your hard drive designation. The hard drive designation is typically Local Disk (C:).
3. Using the hard drive path you recorded earlier, open the folder that contains the update.
4. Double-click the file that has an .exe extension (for example, *filename*.exe).

   The BIOS installation begins.
5. Complete the installation by following the on-screen instructions.

NOTE: After a message on the screen reports a successful installation, you can delete the downloaded file from your hard drive.

Changing the boot order using the f9 prompt

To dynamically choose a boot device for the current startup sequence, follow these steps:

1. Access the Boot Device Options menu:
   - Turn on or restart the computer, and when the HP logo appears, press f9 to enter the Boot Device Options menu.
2. Select a boot device, press enter, and then follow the on-screen instructions.

TPM BIOS settings (select products only)

IMPORTANT: Before enabling Trusted Platform Module (TPM) functionality on this system, you must ensure that your intended use of TPM complies with relevant local laws, regulations and policies, and approvals or licenses must be obtained if applicable. For any compliance issues arising from your operation/usage of TPM which violates the above mentioned requirement, you shall bear all the liabilities wholly and solely. HP will not be responsible for any related liabilities.

TPM provides additional security for your computer. You can modify the TPM settings in Computer Setup (BIOS).

NOTE: If you change the TPM setting to Hidden, TPM is not visible in the operating system.

To access TPM settings in Computer Setup:

1. Start Computer Setup. See Starting Computer Setup on page 86.
2. Select **Security**, select **TPM Embedded Security**, and then follow the on-screen instructions.

Using HP Sure Start (select products only)

Select computer models are configured with HP Sure Start, a technology that monitors the computer's BIOS for attacks or corruption. If the BIOS becomes corrupted or is attacked, HP Sure Start automatically restores the BIOS to its previously safe state, without user intervention.

HP Sure Start is configured and already enabled so that most users can use the HP Sure Start default configuration. The default configuration can be customized by advanced users.

To access the latest documentation on HP Sure Start, go to http://www.hp.com/support. Select **Find your product**, and then follow the on-screen instructions.

7 Using HP PC Hardware Diagnostics (UEFI)

HP PC Hardware Diagnostics is a Unified Extensible Firmware Interface (UEFI) that allows you to run diagnostic tests to determine whether the computer hardware is functioning properly. The tool runs outside the operating system so that it can isolate hardware failures from issues that are caused by the operating system or other software components.

When HP PC Hardware Diagnostics (UEFI) detects a failure that requires hardware replacement, a 24-digit Failure ID code is generated. This ID code can then be provided to support to help determine how to correct the problem.

NOTE: To start diagnostics on a convertible computer, your computer must be in notebook mode and you must use the keyboard attached.

To start HP PC Hardware Diagnostics (UEFI), follow these steps:

1. Turn on or restart the computer, and quickly press esc.
2. Press f2.

   The BIOS searches three places for the diagnostic tools, in the following order:

   a. Connected USB drive

      NOTE: To download the HP PC Hardware Diagnostics (UEFI) tool to a USB drive, see Downloading HP PC Hardware Diagnostics (UEFI) to a USB device on page 90.

   b. Hard drive

   c. BIOS
3. When the diagnostic tool opens, select the type of diagnostic test you want to run, and then follow the on-screen instructions.

NOTE: If you need to stop a diagnostic test, press esc.

Downloading HP PC Hardware Diagnostics (UEFI) to a USB device

NOTE: The HP PC Hardware Diagnostics (UEFI) download instructions are provided in English only, and you must use a Windows computer to download and create the HP UEFI support environment because only .exe files are offered.

There are two options to download HP PC Hardware Diagnostics to a USB device.

Download the latest UEFI version

1. Go to http://www.hp.com/go/techcenter/pcdiags. The HP PC Diagnostics home page is displayed.
2. In the HP PC Hardware Diagnostics section, select the **Download** link, and then select **Run**.

Download any version of UEFI for a specific product

1. Go to http://www.hp.com/support.
2. Select **Get software and drivers**.

3. Enter the product name or number.

   – or –

   Select **Identify now** to let HP automatically detect your product.

4. Select your computer, and then select your operating system.

5. In the **Diagnostic** section, follow the on-screen instructions to select and download the UEFI version you want.

8 Backing up, restoring, and recovering

This chapter provides information about the following processes. The information in the chapter is standard procedure for most products.

- Creating recovery media and backups
- Restoring and recovering your system

For additional information, refer to the HP Support Assistant app.

▲ Type `support` in the taskbar search box, and then select the **HP Support Assistant** app.

– or –

Select the question mark icon in the taskbar.

IMPORTANT: If you will be performing recovery procedures on a tablet, the tablet battery must be at least 70% charged before you start the recovery process.

IMPORTANT: For a tablet with a detachable keyboard, connect the tablet to the keyboard base before beginning any recovery process.

Creating recovery media and backups

The following methods of creating recovery media and backups are available on select products only. Choose the available method according to your computer model.

- Use HP Recovery Manager to create HP Recovery media after you successfully set up the computer. This step creates a backup of the HP Recovery partition on the computer. The backup can be used to reinstall the original operating system in cases where the hard drive is corrupted or has been replaced. For information on creating recovery media, see Creating HP Recovery media (select products only) on page 92. For information on the recovery options that are available using the recovery media, see Using Windows tools on page 93.
- Use Windows tools to create system restore points and create backups of personal information.

  For more information, see Recovering using HP Recovery Manager on page 94.

NOTE: If storage is 32 GB or less, Microsoft System Restore is disabled by default.

Creating HP Recovery media (select products only)

If possible, check for the presence of the Recovery partition and the Windows partition. From the **Start** menu, select **File Explorer**, and then select **This PC**.

- If your computer does not list the Windows partition and the Recovery partition, you can obtain recovery media for your system from support. See the *Worldwide Telephone Numbers* booklet included with the computer. You can also find contact information on the HP website. Go to http://www.hp.com/support, select your country or region, and follow the on-screen instructions.

You can use Windows tools to create system restore points and create backups of personal information, see Using Windows tools on page 93.

- If your computer does list the Recovery partition and the Windows partition, you can use HP Recovery Manager to create recovery media after you successfully set up the computer. HP Recovery media can be used to perform system recovery if the hard drive becomes corrupted. System recovery reinstalls the original operating system and software programs that were installed at the factory and then configures the settings for the programs. HP Recovery media can also be used to customize the system or restore the factory image if you replace the hard drive.
  - Only one set of recovery media can be created. Handle these recovery tools carefully, and keep them in a safe place.
  - HP Recovery Manager examines the computer and determines the required storage capacity for the media that will be required.
  - To create recovery discs, your computer must have an optical drive with DVD writer capability, and you must use only high-quality blank DVD-R, DVD+R, DVD-R DL, or DVD+R DL discs. Do not use rewritable discs such as CD±RW, DVD±RW, double-layer DVD±RW, or BD-RE (rewritable Blu-ray) discs; they are not compatible with HP Recovery Manager software. Or, instead, you can use a high-quality blank USB flash drive.
  - If your computer does not include an integrated optical drive with DVD writer capability, but you would like to create DVD recovery media, you can use an external optical drive (purchased separately) to create recovery discs. If you use an external optical drive, it must be connected directly to a USB port on the computer; the drive cannot be connected to a USB port on an external device, such as a USB hub. If you cannot create DVD media yourself, you can obtain recovery discs for your computer from HP. See the *Worldwide Telephone Numbers* booklet included with the computer. You can also find contact information on the HP website. Go to http://www.hp.com/support, select your country or region, and follow the on-screen instructions.
  - Be sure that the computer is connected to AC power before you begin creating the recovery media.
  - The creation process can take an hour or more. Do not interrupt the creation process.
  - If necessary, you can exit the program before you have finished creating all of the recovery DVDs. HP Recovery Manager will finish burning the current DVD. The next time you start HP Recovery Manager, you will be prompted to continue.

To create HP Recovery media:

IMPORTANT: For a tablet with a detachable keyboard, connect the tablet to the keyboard base before beginning these steps.

1. Type `recovery` in the taskbar search box, and then select **HP Recovery Manager**.
2. Select **Create recovery media**, and then follow the on-screen instructions.

If you ever need to recover the system, see Recovering using HP Recovery Manager on page 94.

Using Windows tools

You can create recovery media, system restore points, and backups of personal information using Windows tools.

NOTE: If storage is 32 GB or less, Microsoft System Restore is disabled by default.

For more information and steps, see the Get started app.

- Select the **Start** button, and then select the **Get started** app.

Restore and recovery

There are several options for recovering your system. Choose the method that best matches your situation and level of expertise:

IMPORTANT: Not all methods are available on all products.

- Windows offers several options for restoring from backup, refreshing the computer, and resetting the computer to its original state. For more information see the Get started app.

  ▲ Select the **Start** button, and then select the **Get started** app.

- If you need to correct a problem with a preinstalled application or driver, use the Reinstall drivers and/or applications option (select products only) of HP Recovery Manager to reinstall the individual application or driver.

  ▲ Type `recovery` in the taskbar search box, select **HP Recovery Manager**, select **Reinstall drivers and/or applications**, and then follow the on-screen instructions.

- If you want to recover the Windows partition to original factory content, you can choose the System Recovery option from the HP Recovery partition (select products only) or use the HP Recovery media. For more information, see Recovering using HP Recovery Manager on page 94. If you have not already created recovery media, see Creating HP Recovery media (select products only) on page 92.

- On select products, if you want to recover the computer's original factory partition and content, or if you have replaced the hard drive, you can use the Factory Reset option of HP Recovery media. For more information, see Recovering using HP Recovery Manager on page 94.

- On select products, if you want to remove the Recovery partition to reclaim hard drive space, HP Recovery Manager offers the Remove Recovery Partition option.

  For more information, see Removing the HP Recovery partition (select products only) on page 97.

Recovering using HP Recovery Manager

HP Recovery Manager software allows you to recover the computer to its original factory state by using the HP Recovery media that you either created or that you obtained from HP, or by using the HP Recovery partition (select products only). If you have not already created recovery media, see Creating HP Recovery media (select products only) on page 92.

What you need to know before you get started

- HP Recovery Manager recovers only software that was installed at the factory. For software not provided with this computer, you must either download the software from the manufacturer's website or reinstall the software from the media provided by the manufacturer.

  IMPORTANT: Recovery through HP Recovery Manager should be used as a final attempt to correct computer issues.

- HP Recovery media must be used if the computer hard drive fails. If you have not already created recovery media, see Creating HP Recovery media (select products only) on page 92.

- To use the Factory Reset option (select products only), you must use HP Recovery media. If you have not already created recovery media, see Creating HP Recovery media (select products only) on page 92.

- If your computer does not allow the creation of HP Recovery media or if the HP Recovery media does not work, you can obtain recovery media for your system from support. See the *Worldwide Telephone Numbers* booklet included with the computer. You can also find contact information from the HP

website. Go to http://www.hp.com/support, select your country or region, and follow the on-screen instructions.

IMPORTANT: HP Recovery Manager does not automatically provide backups of your personal data. Before beginning recovery, back up any personal data you want to retain.

Using HP Recovery media, you can choose from one of the following recovery options:

NOTE: Only the options available for your computer display when you start the recovery process.

- System Recovery—Reinstalls the original operating system, and then configures the settings for the programs that were installed at the factory.
- Factory Reset—Restores the computer to its original factory state by deleting all information from the hard drive and re-creating the partitions. Then it reinstalls the operating system and the software that was installed at the factory.

The HP Recovery partition (select products only) allows System Recovery only.

Using the HP Recovery partition (select products only)

The HP Recovery partition allows you to perform a system recovery without the need for recovery discs or a recovery USB flash drive. This type of recovery can be used only if the hard drive is still working.

To start HP Recovery Manager from the HP Recovery partition:

IMPORTANT: For a tablet with a detachable keyboard, connect the tablet to the keyboard base before beginning these steps (select products only).

1. Type `recovery` in the taskbar search box, select **Recovery Manager**, and then select **HP Recovery Environment**.

   – or –

   For computers or tablets with keyboards attached, press f11 while the computer boots, or press and hold f11 as you press the power button.

   For tablets without keyboards:

   - Turn on or restart the tablet, and then quickly hold down the volume up button; then select **f11**.

   – or –

   - Turn on or restart the tablet, and then quickly hold down the volume down button; then select **f11**.
2. Select **Troubleshoot** from the boot options menu.
3. Select **Recovery Manager**, and then follow the on-screen instructions.

Using HP Recovery media to recover

You can use HP Recovery media to recover the original system. This method can be used if your system does not have an HP Recovery partition or if the hard drive is not working properly.

1. If possible, back up all personal files.
2. Insert the HP Recovery media, and then restart the computer.

   NOTE: If the computer does not automatically restart in HP Recovery Manager, change the computer boot order. See Changing the computer boot order on page 96.
3. Follow the on-screen instructions.

Changing the computer boot order

If your computer does not restart in HP Recovery Manager, you can change the computer boot order, which is the order of devices listed in BIOS where the computer looks for startup information. You can change the selection to an optical drive or a USB flash drive.

To change the boot order:

IMPORTANT: For a tablet with a detachable keyboard, connect the tablet to the keyboard base before beginning these steps.

1. Insert the HP Recovery media.
2. Access the system **Startup** menu.

   For computers or tablets with keyboards attached:

   - Turn on or restart the computer or tablet, quickly press esc, and then press f9 for boot options.

   For tablets without keyboards:

   - Turn on or restart the tablet, and then quickly hold down the volume up button; then select **f9**.

     – or –

     Turn on or restart the tablet, and then quickly hold down the volume down button; then select **f9**.
3. Select the optical drive or USB flash drive from which you want to boot.
4. Follow the on-screen instructions.

Removing the HP Recovery partition (select products only)

HP Recovery Manager software allows you to remove the HP Recovery partition to free up hard drive space.

IMPORTANT: After you remove the HP Recovery partition, you will not be able to perform System Recovery or create HP Recovery media from the HP Recovery partition. So before you remove the Recovery partition, create HP Recovery media; see Creating HP Recovery media (select products only) on page 92.

NOTE: The Remove Recovery Partition option is only available on products that support this function.

Follow these steps to remove the HP Recovery partition:

1. Type `recovery` in the taskbar search box, and then select **HP Recovery Manager**.
2. Select **Remove Recovery Partition**, and then follow the on-screen instructions.

9 Specifications

Computer specifications

14” products	Metric	U.S.
Dimensions		
Width	**34 cm**	13.39 in
Depth	**23.7 cm**	9.33 in
Height (front to back)	**2.7 cm**	1.06 in
Weight	**1.95 or 2.07 kg** (depending on configuration)	4.3 lb or 4.57(depending on configuration)
Input power		
Operating voltage and current	19.5 V dc @ 2.31 – 45 W 19.5 V dc @ 3.33 A – 65 W	
Temperature		
Operating	**5°C to 35°C**	41°F to 95°F
Nonoperating	**-20°C to 60°C**	-4°F to 140°F
Relative humidity (noncondensing)		
Operating	10% to 90%	
Nonoperating	5% to 95%	
Maximum altitude (unpressurized)		
Operating	**-15 m to 3,048 m**	-50 ft to 10,000 ft
Nonoperating	**-15 m to 12,192 m**	-50 ft to 40,000 ft
NOTE: Applicable product safety standards specify thermal limits for plastic surfaces. The device operates well within this range of temperatures.		

15” products	Metric	U.S.
Dimensions		
Width	**37.8 cm**	14.88 in
Depth	**25.7 cm**	10.11 in
Height (front to back)	**2.74 cm**	1.07 in
Weight	**2.31 or 2.44 kg** (depending on configuration)	5.1 lb or 5.37(depending on configuration)
Input power		

15” products	Metric	U.S.
Operating voltage and current	19.5 V dc @ 2.31 – 45 W 19.5 V dc @ 3.33 A – 65 W 19.5V@4.6A– 90W (select products only)	
Temperature		
Operating	**5°C to 35°C**	41°F to 95°F
Nonoperating	**-20°C to 60°C**	-4°F to 140°F
Relative humidity (noncondensing)		
Operating	10% to 90%	
Nonoperating	5% to 95%	
Maximum altitude (unpressurized)		
Operating	**-15 m to 3,048 m**	-50 ft to 10,000 ft
Nonoperating	**-15 m to 12,192 m**	-50 ft to 40,000 ft
NOTE: Applicable product safety standards specify thermal limits for plastic surfaces. The device operates well within this range of temperatures.		

35.56 cm (14-in) display specifications

14.0 FHD AG WLED SVA 60%cg 300nits eDP Slim Touch

	Metric	U.S.
Active Area (W x H)	309.40 x 173.95 (mm)	12.18 x 6.85 in
Dimensions (W x H)	**320.9 x 205.6 mm**	12.634 x 8.094 in
Diagonal	**35.56 cm**	14 in
Thickness	3.0 mm max	
Weight	270 g max	
Interface	eDP 1.2	
Surface Treatment	Anti-Glare (AG)	
Contrast Ratio	300:1 (typical)	
Refresh Rate	60 Hz	
Brightness	300 nits	
Pixel Resolution - Format	1920 x 1080 (FHD)	
PPI	157	
Pixel Resolution - Configuration	RGB	
Backlight	LED	
Color Gamut Coverage	60%	
Color Depth	6 bits + Hi FRC	
Viewing angle	SVA 45/45/25/35	
Touch Enabled	Optional	
Touch Point Supported	10-point multi-touch	
Other Features	AS	
Pen Enabled	No	

14.0 HD AG WLED SVA 45%cg 220nits eDP Slim

	Metric	U.S.
Active Area (W x H)	309.40 x 173.95 (mm)	12.18 x 6.85 in
Dimensions (W x H)	**320.9 x 205.6 (mm) max**	12.634 x 8.094 in
Diagonal	**35.56 cm**	14 in
Thickness	3.0 mm max	
Weight	290 g max	
Interface	eDP 1.2	
Surface Treatment	Anti-Glare (AG)	

	Metric	U.S.
Contrast Ratio	300:1 (typical)	
Refresh Rate	60 Hz	
Brightness	220 nits	
Pixel Resolution - Format	1366 x 768 (HD)	
PPI	112	
Pixel Resolution - Configuration	RGB	
Backlight	LED	
Color Gamut Coverage	45%	
Color Depth	6 bits + Hi FRC	
Viewing angle	SVA 45/45/25/35	
Touch Enabled	Optional	
Touch Point Supported	10-point multi-touch	
Other Features	AS	
Pen Enabled	No	

14.0 HD AG WLED SVA 45%cg 220nits eDP Slim

	Metric	U.S.
Active Area (W x H)	309.40 x 173.95 (mm)	12.18 x 6.85 in
Dimensions (W x H)	**320.9 x 205.6 (mm) max**	12.634 x 8.094 in
Diagonal	**35.56 cm**	14 in
Thickness	3.0 mm max	
Weight	290 g max	
Interface	eDP 1.2	
Surface Treatment	Anti-Glare (AG)	
Contrast Ratio	300:1 (typical)	
Refresh Rate	60 Hz	
Brightness	220 nits	
Pixel Resolution - Format	1366 x 768 (HD)	
PPI	112	
Pixel Resolution - Configuration	RGB	
Backlight	LED	
Color Gamut Coverage	45%	
Color Depth	6 bits + Hi FRC	
Viewing angle	SVA 45/45/25/35	

	Metric	U.S.
Touch Enabled	Optional	
Touch Point Supported	10-point multi-touch	
Other Features	AS	
Pen Enabled	No	

39.62 cm (15.6-in) display specifications

15.6 FHD AG WLED SVA 60%cg 300nits eDP Slim 3.2mm Touch

	Metric	U.S.
Active Area (W x H)	344.2 x 193.5 (mm)	13.55 x 7.62
Dimensions (W x H)	**360 x 224.3 (mm) max**	14.17 x 8.83 in
Diagonal	**39.62 cm**	15.6 in
Thickness	3.2 mm max	
Weight	360 g max	
Interface	eDP 1.2	
Surface Treatment	Anti-Glare (AG)	
Contrast Ratio	400:1 (typical)	
Refresh Rate	60 Hz	
Brightness	220 nits	
Pixel Resolution - Format	1920 x 1080 (FHD)	
PPI	142	
Pixel Resolution - Configuration	RGB	
Backlight	LED	
Color Gamut Coverage	60%	
Color Depth	6 bits	
Viewing angle	SVA 45/45/25/35	
Touch Point Supported	Optional	
Other Features	10-point multi-touch	
Pen Enabled	AS	

15.6 HD AG WLED SVA 45%cg 220nits eDP Slim

	Metric	U.S.
Active Area (W x H)	344.2 x 193.5 (mm)	13.55 x 7.62
Dimensions (W x H)	**360 x 224.3 (mm) max**	14.17 x 8.83 in
Diagonal	**39.62 cm**	15.6 in
Thickness	3.2 mm max	
Weight	370 g max	
Interface	eDP 1.2	
Surface Treatment	Anti-Glare (AG)	
Contrast Ratio	300:1 (typical)	

	Metric	U.S.
Refresh Rate	60 Hz	
Brightness	220 nits	
Pixel Resolution - Format	1366 x 768 (HD)	
PPI	101	
Pixel Resolution - Configuration	RGB	
Backlight	LED	
Color Gamut Coverage	45%	
Color Depth	6 bits + Hi FRC	
Viewing angle	SVA 45/45/25/35	

Hard drive specifications

HDD 500GB 7200RPM 7mm SATA

Capacity	**500 GB***
Drive Weight	92–95 g (0.20-0.21 lbs)
Rotation Speed	7200 rpm
Cache Buffer	Up to 32 MB
NAND Type/Size	N/A
Height	7 mm
Width	69.85 mm
Interface	ATA-8, SATA 3.0
Interface Transfer Rate	600 MB/sec
Seek times (typical read, including setting)	
Single track	1.5-2 ms
Average	12-13 ms
Maximum	18-32 ms
Logical Blocks	1,953,525,168
Operating Temperature	**0°C to 60°C** (32°F to 140°F)[top cover temp]
Security Features	ATA security
Other Features	S.M.A.R.T., NCQ, Ultra DMA
*Size refers to hard drive storage capacity. Actual accessible capacity is less. Actual drive specifications may differ slightly.	
NOTE: Certain restrictions and exclusions apply. Contact support for details.	

HDD 1TB 5400RPM 7mm SATA

Capacity	**1 TB ***
Drive Weight	90–95 g (0.198-0.21 lbs)
Rotation Speed	5400 rpm
Cache Buffer	Up to 32 MB
NAND Type/Size	N/A
Height	7 mm
Width	69.85 mm
Interface	ATA-8, SATA 3.0
Interface Transfer Rate	600 MB/sec
Seek times (typical read, including setting)	
Single track	1.5-2 ms
Average	12-13 ms
Maximum	18-32 ms
Logical Blocks	1,953,525,168
Operating Temperature	**0°C to 60°C** (32°F to 140°F)[top cover temp]
Security Features	ATA security
Other Features	S.M.A.R.T., NCQ, Ultra DMA
*Size refers to hard drive storage capacity. Actual accessible capacity is less. Actual drive specifications may differ slightly.	
NOTE: Certain restrictions and exclusions apply. Contact support for details.	

HDD 500GB 5400RPM 7mm Hybrid SATA 8GB NAND

Capacity	**500 GB ***
Drive Weight	92–95 g (0.20-0.21 lbs)
Rotation Speed	5400 rpm
Cache Buffer	Up to 64MB
NAND Type/Size	MLC/8GB
Height	7 mm
Width	69.85 mm
Interface	ATA-8, SATA 3.0
Interface Transfer Rate	600 MB/sec
Seek times (typical read, including setting)	
Single track	2 ms
Average	12 ms
Maximum	22 ms

Capacity	**500 GB ***
Logical Blocks	976,773,168
Operating Temperature	**0°C to 60°C** (32°F to 140°F)[top cover temp]
Security Features	ATA security
Other Features	S.M.A.R.T., NCQ, Ultra DMA
*Size refers to hard drive storage capacity. Actual accessible capacity is less. Actual drive specifications may differ slightly.	
NOTE: Certain restrictions and exclusions apply. Contact support for details.	

HDD 500GB 7200RPM 7mm FIPS SATA Opal2

Capacity	**500 GB ***
Drive Weight	95 g (0.20-0.21 lbs)
Rotation Speed	7200 rpm
Cache Buffer	32MB
NAND Type/Size	N/A
Height	7 mm (0.28 in)
Width	69.85 mm (2.75 in)
Interface	ATA-8, SATA 3.0
Interface Transfer Rate	600 MB/sec
Seek times (typical read, including setting)	
Single track	1.5 ms
Average	12 ms
Maximum	21 ms
Logical Blocks	976,773,168
Operating Temperature	**0°C to 60°C** (32°F to 140°F)[top cover temp]
Security Features	ATA Security; TCG Opal 2.x, FIPS
Other Features	S.M.A.R.T., NCQ, Ultra DMA
*Size refers to hard drive storage capacity. Actual accessible capacity is less. Actual drive specifications may differ slightly.	
NOTE: Certain restrictions and exclusions apply. Contact support for details.	

HDD 500GB 7200RPM 7mm SED SATA Opal2

Capacity	**500 GB ***
Drive Weight	95 g (0.21 lbs)
Rotation Speed	7200 rpm
Cache Buffer	32MB

Capacity	**500 GB ***
NAND Type/Size	N/A
Height	7 mm (0.28 in)
Width	69.85 mm (2.75 in)
Interface	ATA-8, SATA 3.0
Interface Transfer Rate	600 MB/sec
Seek times (typical read, including setting)	
Single track	1.5 ms
Average	12 ms
Maximum	21 ms
Logical Blocks	976,773,168
Operating Temperature	**0°C to 60°C** (32°F to 140°F)[top cover temp]
Security Features	ATA Security; TCG Opal 2.x, FIPS
Other Features	S.M.A.R.T., NCQ, Ultra DMA
*Size refers to hard drive storage capacity. Actual accessible capacity is less. Actual drive specifications may differ slightly.	
NOTE: Certain restrictions and exclusions apply. Contact support for details.	

Solid-state drive specifications

SSD 512 GB 2280 M2 PCIe-3x4 SS NVMe

Form-Factor (I/O)	**M.2 2280**
Capacity	512 GB
NAND Type	MLC
Weight	10 g (0.02 lb)
Height	2.33 mm (0.09 in)
Width	22 mm (0.87 in)
Interface	PCIe NVMe Gen3X4
Sequential Read	Up to 3200 MB/s
Sequential Write	Up to 1700 MB/s
Logical Blocks	1,000,215,216
Operating Temperature	0° to 70°C (32° to 158°F) [ambient temp]
Security Features	ATA Security (Option)
Other Features	TRIM; L1.2

SSD 128 GB 2280 M2 SATA-3 Value

Form-Factor (I/O)	M.2 2280
Capacity	128 GB
NAND Type	MLC/TLC
Weight	6-10 g (0.01-0.02 lb)
Height	2.3 mm (0.09 in)
Width	22 mm (0.87 in)
Interface	ATA-8, SATA 3.0
Sequential Read	Up to 535 MB/s
Sequential Write	Up to 515 MB/s
Logical Blocks	250,069,680
Operating Temperature	0° to 70°C (32° to 158°F) [ambient temp]
Security Features	ATA Security (Option)
Other Features	DIPM; TRIM; DEVSLP

SSD 512 GB 2280 M2 PCIe-3x4 SS NVMe TLC

Form-Factor (I/O)	M.2 2280
Capacity	512 GB
NAND Type	TLC
Weight	10 g (0.02 lb)
Height	2.3 mm (0.09 in)
Width	22 mm (0.87 in)
Interface	PCIe NVMe Gen3X4
Sequential Read	Up to 2600 MB/s
Sequential Write	Up to 1400 MB/s
Logical Blocks	1,000,215,216
Operating Temperature	0° to 70°C (32° to 158°F) [ambient temp]
Security Features	ATA Security (Option)
Other Features	TRIM; L1.2

SSD 512 GB 2280 M2 SATA-3 Self Encrypted OPAL2 Three Layer Cell

Form-Factor (I/O)	M.2 2280
Capacity	512 GB
NAND Type	TLC
Weight	10 g (0.02 lb)

Form-Factor (I/O)	M.2 2280
Height	2.3 mm (0.09 in)
Width	22 mm (0.87 in)
Interface	PCIe NVMe Gen3X4
Sequential Read	Up to 260 MB/s
Sequential Write	Up to 1400 MB/s
Logical Blocks	1,000,215,216
Operating Temperature	0° to 70°C (32° to 158°F) [ambient temp]
Security Features	ATA Security; TCG Opal 2.0
Other Features	TRIM; L1.2

SSD 256GB 2280 M2 SATA-3 Self Encrypted OPAL2 Three Layer Cell

Form-Factor (I/O)	M.2 2280
Capacity	256 GB
NAND Type	TLC
Weight	10 g (0.02 lb)
Height	2.3 mm (0.09 in)
Width	22 mm (0.87 in)
Interface	ATA-8, SATA 3.0
Sequential Read	Up to 530 MB/s
Sequential Write	Up to 515 MB/s
Logical Blocks	500,118,192
Operating Temperature	0° to 70°C (32° to 158°F) [ambient temp]
Security Features	ATA Security; TCG Opal 2.0
Other Features	DIPM; TRIM; DEVSLP

10 Power cord set requirements

The wide-range input feature of the computer permits it to operate from any line voltage from 100 to 120 volts AC, or from 220 to 240 volts AC.

The 3-conductor power cord set included with the computer meets the requirements for use in the country or region where the equipment is purchased.

Power cord sets for use in other countries and regions must meet the requirements of the country or region where the computer is used.

Requirements for all countries

The following requirements are applicable to all countries and regions:

- The length of the power cord set must be at least **1.0 m** (3.3 ft) and no more than **2.0 m** (6.5 ft).
- All power cord sets must be approved by an acceptable accredited agency responsible for evaluation in the country or region where the power cord set will be used.
- The power cord sets must have a minimum current capacity of 10 amps and a nominal voltage rating of 125 or 250 V AC, as required by the power system of each country or region.
- The appliance coupler must meet the mechanical configuration of an EN 60 320/IEC 320 Standard Sheet C13 connector for mating with the appliance inlet on the back of the computer.

Requirements for specific countries and regions

Country/region	Accredited agency	Applicable note number
Australia	EANSW	1
Austria	OVE	1
Belgium	CEBC	1
Canada	CSA	2
Denmark	DEMKO	1
Finland	FIMKO	1
France	UTE	1
Germany	VDE	1
Italy	IMQ	1
Japan	METI	3
The Netherlands	KEMA	1
Norway	NEMKO	1
The People's Republic of China	COC	5
South Korea	EK	4

Country/region	Accredited agency	Applicable note number
Sweden	SEMKO	1
Switzerland	SEV	1
Taiwan	BSMI	4
The United Kingdom	BSI	1
The United States	UL	2

1. The flexible cord must be Type H05VV-F, 3-conductor, 1.0-mm² conductor size. Power cord set fittings (appliance coupler and wall plug) must bear the certification mark of the agency responsible for evaluation in the country or region where it will be used.
2. The flexible cord must be Type SPT-3 or equivalent, No. 18 AWG, 3-conductor. The wall plug must be a two-pole grounding type with a NEMA 5-15P (15 A, 125 V) or NEMA 6-15P (15 A, 250 V) configuration.
3. The appliance coupler, flexible cord, and wall plug must bear a “T” mark and registration number in accordance with the Japanese Dentori Law. The flexible cord must be Type VCT or VCTF, 3-conductor, 1.00-mm² conductor size. The wall plug must be a two-pole grounding type with a Japanese Industrial Standard C8303 (7 A, 125 V) configuration.
4. The flexible cord must be Type RVV, 3-conductor, 0.75-mm² conductor size. Power cord set fittings (appliance coupler and wall plug) must bear the certification mark of the agency responsible for evaluation in the country or region where it will be used.
5. The flexible cord must be Type VCTF, 3-conductor, 0.75-mm² conductor size. Power cord set fittings (appliance coupler and wall plug) must bear the certification mark of the agency responsible for evaluation in the country or region where it will be used.

11 Statement of memory volatility

The purpose of this chapter is to provide general information regarding nonvolatile memory in HP Business PCs. This chapter also provides general instructions for restoring nonvolatile memory that can contain personal data after the system has been powered off and the hard drive has been removed.

HP Business PC products that use Intel®-based or AMD®-based system boards contain volatile DDR memory. The amount of nonvolatile memory present in the system depends upon the system configuration. Intel-based and AMD-based system boards contain nonvolatile memory subcomponents as originally shipped from HP, assuming that no subsequent modifications have been made to the system and assuming that no applications, features, or functionality have been added to or installed on the system.

Following system shutdown and removal of all power sources from an HP Business PC system, personal data can remain on volatile system memory (DIMMs) for a finite period of time and will also remain in nonvolatile memory. Use the steps below to remove personal data from the PC, including the nonvolatile memory found in Intel-based and AMD-based system boards.

1. Follow steps (a) through (j) below to restore the nonvolatile memory that can contain personal data. Restoring or reprogramming nonvolatile memory that does not store personal data is neither necessary nor recommended.

   a. Turn on or restart the computer, and then press esc while the “Press the ESC key for Startup Menu” message is displayed at the bottom of the screen.

   NOTE: If the system has a BIOS administrator password, enter the password at the prompt.

   b. Select **Main**, select **Restore Defaults**, and then select **Yes** to load defaults.

   c. Select the **Security** menu, select **Restore Security Level Defaults**, and then select **Yes** to restore security level defaults.

   d. If an asset or ownership tag is set, select the **Security** menu and scroll down to the **Utilities** menu. Select **System IDs**, and then select **Asset Tracking Number**. Clear the tag, and then make the selection to return to the prior menu.

   e. If a DriveLock password is set, select the **Security** menu, and scroll down to **Hard Drive Tools** under the **Utilities** menu. Select **Hard Drive Tools**, select **DriveLock**, then clear the check box for **DriveLock password on restart**. Select **OK** to proceed.

   f. If an Automatic DriveLock password is set, select the **Security** menu, scroll down to **Hard Drive Tools** under the **Utilities** menu. Select **Hard Drive Tools**, scroll down to **Automatic DriveLock**, then select the desired hard drive and disable protection. At the automatic drive lock warning screen, select **Yes** to continue. Repeat this procedure if more than one hard drive has an Automatic DriveLock password.

   g. Select the **Main** menu, and then select **Reset BIOS Security to factory default**. Click **Yes** at the warning message.

   h. Select the **Main** menu, select **Save Changes and Exit**, select **Yes** to save changes and exit, and then select **Shutdown**.

i. Reboot the system. If the system has a Trusted Platform Module (TPM) and/or fingerprint reader, one or two prompts will appear—one to clear the TPM and the other to Reset Fingerprint Sensor; press or tap F1 to accept or F2 to reject.

j. Remove all power and system batteries for at least 24 hours.

2. Complete one of the following:

- Remove and retain the storage drive.

– or –

- Clear the drive contents by using a third-party utility designed to erase data from an SSD.

– or –

- Clear the contents of the drive by using the following BIOS Setup Secure Erase command option steps:

IMPORTANT: If you clear data using Secure Erase, it cannot be recovered.

a. Turn on or restart the computer, and then press esc while the “Press the ESC key for Startup Menu” message is displayed at the bottom of the screen.

b. Select the **Security** menu and scroll down to the **Utilities** menu.

c. Select **Hard Drive Tools**.

d. Under **Utilities**, select **Secure Erase**, select the hard drive storing the data you want to clear, and then follow the on-screen instructions to continue.

– or –

- Clear the contents of the drive by using the following Disk Sanitizer command steps:

IMPORTANT: If you clear data using Disk Sanitizer, it cannot be recovered.

NOTE: The amount of time it takes for Disk Sanitizer to run can take several hours. Plug the computer into an AC outlet before starting.

a. Turn on or restart the computer, and then press esc while the “Press the ESC key for Startup Menu” message is displayed at the bottom of the screen.

b. Select the **Security** menu and scroll down to the **Utilities** menu.

c. Select **Hard Drive Tools**.

d. Under **Utilities**, select **Disk Sanitizer**, select the hard drive storing the data you want to clear, and then follow the on-screen instructions to continue.

Nonvolatile memory usage

Nonvolatile memory type	Amount (Size)	Does this memory store customer data?	Does this memory retain data when power is removed?	What is the purpose of this memory?	How is data input into this memory?	How is this memory write-protected?
HP Sure Start flash (select models only)	2 MBytes	No	Yes	Provides protected backup of critical System BIOS code, EC firmware, and critical PC configuration data for select platforms that support HP Sure Start. For more information, see Using HP Sure Start (select models only) on page 117.	Data cannot be written to this device via the host processor. The content is managed solely by the HP Sure Start Embedded Controller.	This memory is protected by the HP Sure Start Embedded Controller.
Real Time Clock (RTC) battery backed-up CMOS configuration memory	256 Bytes	No	Yes	Stores system date and time and noncritical data.	RTC battery backed-up CMOS is programmed using the Computer Setup (BIOS), or changing the Microsoft Windows date and time.	This memory is not write-protected.
Controller (NIC) EEPROM	64 KBytes (not customer accessible)	No	Yes	Stores NIC configuration and NIC firmware.	NIC EEPROM is programmed using a utility from the NIC vendor that can be run from DOS.	A utility is required to write data to this memory and is available from the NIC vendor. Writing data to this ROM in an inappropriate manner will render the NIC non-functional.
DIMM Serial Presence Detect (SPD) configuration data	256 Bytes per memory module, 128 Bytes programmable (not customer accessible)	No	Yes	Stores memory module information.	DIMM SPD is programmed by the memory vendor.	Data cannot be written to this memory when the module is installed in a PC. The specific write-protection method varies by memory vendor.
System BIOS	4 MBytes to 5 MBytes	Yes	Yes	Stores system BIOS code and PC configuration data.	System BIOS code is programmed at the factory. Code is updated when the system BIOS is updated. Configuration data and settings are input using the Computer Setup (BIOS) or a custom utility.	**NOTE:** Writing data to this ROM in an inappropriate manner can render the PC non-functional. A utility is required for writing data to this memory and is available on the HP website; go to http://www.hp.com/support, and select your country. Select **Drivers &**

Nonvolatile memory type	Amount (Size)	Does this memory store customer data?	Does this memory retain data when power is removed?	What is the purpose of this memory?	How is data input into this memory?	How is this memory write-protected?
						Downloads, and then follow the on-screen instructions.
Intel Management Engine Firmware (present in only specific ZBook and EliteBook models. For more information, go to http://www.hp.com/support, and select your country. Select **Drivers & Downloads**, and then follow the on-screen instructions.)	1.5 MBytes or 5 MBytes	Yes	Yes	Stores Management Engine Code, Settings, Provisioning Data and iAMT third-party data store.	Management Engine Code is programmed at the factory. Code is updated via Intel secure firmware update utility. Unique Provisioning Data can be entered at the factory or by an administrator using the Management Engine (MEBx) setup utility. The third-party data store contents can be populated by a remote management console or local applications that have been registered by an administrator to have access to the space.	The Intel chipset is configured to enforce hardware protection to block all direct read/write access to this area. An Intel utility is required for updating the firmware. Only firmware updates digitally signed by Intel can be applied using this utility.
Bluetooth flash	2 Mbit	No	Yes	Stores Bluetooth configuration and firmware.	Bluetooth flash is programmed at the factory. Tools for writing data to this memory are not publicly available but can be obtained from the silicon vendor.	A utility is required for writing data to this memory and is made available through newer versions of the driver whenever the flash requires an upgrade.
802.11 WLAN EEPROM	4 Kbit to 8 Kbit	No	Yes	Stores configuration and calibration data.	802.11 WLAN EEPROM is programmed at the factory. Tools for writing data to this memory are not made public.	A utility is required for writing data to this memory and is usually not made available to the public unless a firmware upgrade is necessary to address a unique issue.
Web camera	64 Kbit	No	Yes	Stores webcam configuration and firmware.	Webcam memory is programmed using a utility from the device manufacturer that can be run from Windows.	A utility is required for writing data to this memory and is usually not made available to the public unless a firmware upgrade is necessary to address a unique issue.
Fingerprint reader	512 KByte flash	Yes	Yes	Stores fingerprint templates.	Fingerprint reader memory is programmed by user enrollment in HP ProtectTools Security Manager.	Only a digitally signed application can make the call to write to the flash.

Questions and answers

1. **How can the BIOS settings be restored (returned to factory settings)?**

   IMPORTANT: Restore defaults does not securely erase any data on your hard drive. See question and answer 6 for steps to securely erase data.

   Restore defaults does not reset the Custom Secure Boot keys. See question and answer 7 for information about resetting the keys.

   a. Turn on or restart the computer, and then press esc while the “Press the ESC key for Startup Menu” message is displayed at the bottom of the screen.

   b. Select **Main**, and then select **Restore defaults**.

   c. Follow the on-screen instructions.

   d. Select **Main**, select **Save Changes and Exit**, and then follow the on-screen instructions.

2. **What is a UEFI BIOS, and how is it different from a legacy BIOS?**

   The Unified Extensible Firmware Interface (UEFI) BIOS is an industry-standard software interface between the platform firmware and an operating system (OS). It is a replacement for the older BIOS architecture, but supports much of the legacy BIOS functionality.

   Like the legacy BIOS, the UEFI BIOS provides an interface to display the system information and configuration settings and to change the configuration of your computer before an OS is loaded. BIOS provides a secure run-time environment that supports a Graphic User Interface (GUI). In this environment, you can use either a pointing device (Touchscreen, TouchPad, pointing stick, or USB mouse) or the keyboard to navigate and make menu and configuration selections. The UEFI BIOS also contains basic system diagnostics.

   The UEFI BIOS provides functionality beyond that of the legacy BIOS. In addition, the UEFI BIOS works to initialize the computer’s hardware before loading and executing the OS; the run-time environment allows the loading and execution of software programs from storage devices to provide more functionality, such as advanced hardware diagnostics (with the ability to display more detailed system information) and advanced firmware management and recovery software.

   HP has provided options in Computer Setup (BIOS) to allow you to run in legacy BIOS, if required by the operating system. Examples of this requirement would be if you upgrade or downgrade the OS.

3. **Where does the UEFI BIOS reside?**

   The UEFI BIOS resides on a flash memory chip. A utility is required to write to the chip.

4. **What kind of configuration data is stored on the DIMM Serial Presence Detect (SPD) memory module? How would this data be written?**

   The DIMM SPD memory contains information about the memory module, such as size, serial number, data width, speed/timing, voltage, and thermal information. This information is written by the module manufacturer and stored on an EEPROM. This EEPROM cannot be written to when the memory module is installed in a PC. Third-party tools do exist that can write to the EEPROM when the memory module is not installed in a PC. Various third-party tools are available to read SPD memory.

5. **What is meant by “Restore the nonvolatile memory found in Intel-based system boards”?**

   This message relates to clearing the Real Time Clock (RTC) CMOS memory that contains PC configuration data.

6. **How can the BIOS security be reset to factory defaults and data erased?**

IMPORTANT: Resetting will result in the loss of information.

These steps will not reset Custom Secure Boot Keys. See question and answer 7 for information about resetting the keys.

a. Turn on or restart the computer, and then press esc while the “Press the ESC key for Startup Menu” message is displayed at the bottom of the screen.

b. Select **Main**, and then select **Reset BIOS Security to Factory Default**.

c. Follow the on-screen instructions.

d. Select **Main**, select **Save Changes and Exit**, and then follow the on-screen instructions.

7. **How can the Custom Secure Boot Keys be reset?**

Secure Boot is a feature to ensure that only authenticated code can start on a platform. If you enabled Secure Boot and created Custom Secure Boot Keys, simply disabling Secure Boot will not clear the keys. You must also select to clear the Custom Secure Boot Keys. Use the same Secure Boot access procedure you used to create the Custom Secure Boot Keys, but make the selection to clear or delete all Secure Boot Keys.

a. Turn on or restart the computer, and then press esc while the “Press the ESC key for Startup Menu” message is displayed at the bottom of the screen.

b. Select the **Security** menu, select **Secure Boot Configuration**, and then follow the on-screen instructions.

c. At the **Secure Boot Configuration** window, select **Secure Boot**, select **Clear Secure Boot Keys**, and then follow the on-screen instructions to continue.

Using HP Sure Start (select models only)

Select computer models are configured with HP Sure Start, a technology that continuously monitors your computer's BIOS for attacks or corruption. If the BIOS becomes corrupted or is attacked, HP Sure Start restores the BIOS to its previously safe state, without user intervention. Those select computer models ship with HP Sure Start configured and enabled. HP Sure Start is configured and already enabled so that most users can use the HP Sure Start default configuration. The default configuration can be customized by advanced users.

To access the latest documentation on HP Sure Start, go to http://www.hp.com/support, and select your country. Select **Drivers & Downloads**, and then follow the on-screen instructions.

12 Recycling

When a non-rechargeable or rechargeable battery has reached the end of its useful life, do not dispose of the battery in general household waste. Follow the local laws and regulations in your area for battery disposal.

HP encourages customers to recycle used electronic hardware, HP original print cartridges, and rechargeable batteries. For more information about recycling programs, see the HP Web site at http://www.hp.com/recycle.

Index

A

AC adapter, spare part numbers 30
Antenna Kit, spare part numbers 30
audio board
  removal 76
  spare part number 26, 76
  spare part numbers 76
audio, product description 3
audio-out (headphone)/audio-in (microphone) combo jack, identifying 7

B

back cover
  spare part number 28
backups 92
Base enclosure
  removal 55
base enclosure
  spare part number 26
battery
  removal 38
  spare part number 26
  spare part numbers 38
battery light 19
BIOS
  determining version 87
  downloading an update 88
  updating 87
boot order
  changing 96
  changing using the f9 prompt 89
buttons
  left pointing stick 11
  left TouchPad 11
  optical drive eject 9
  power 13
  right pointing stick 11
  right TouchPad 11

C

Cable Kit, spare part numbers 30
caps lock light, identifying 12
chipset, product description 1
components
  bottom 18
  display 10
  front 19
  left side 9
  rear 20
  right side 7
  top 11
computer major components 22
Computer Setup
  navigating and selecting 86
  restoring factory settings 87
  using a USB keyboard or USB mouse to start Computer Setup 86
computer setup 86
computer specifications 98
connector, power 8

D

display
  specifications 100, 103
Display assembly
  spare part numbers 24
display assembly
  removal 81
  subcomponents 27
display assembly components
  removal 80
  spare part numbers 80
Display bezel
  spare part number 27
display bezel
  removal 81
  spare part number 80
  spare part numbers 82
display cable, spare part number 28
display panel
  product description 1
  removal 82
  spare part number 80
  spare part numbers 82
docking
  product description 4
docking port, identifying 8
docking station support holes, identifying 18
drive light 19
Dual-Mode DisplayPort, identifying 7

E

embedded numeric keypad, identifying 15
esc key, identifying 15, 16
Ethernet, product description 3
external monitor port 20

F

fan
  spare part numbers 25
fan and heat sink assembly
  spare part numbers 59
Ffan and heat sink assembly
  removal 59
fingerprint reader
  removal 70
  spare part numbers 70
fingerprint reader, identifying 14
fn key, identifying 15, 16
function keys, identifying 15, 16

G

graphics, product description 1

H

hard drive
  product description 2
  removal 39
  spare part number 26, 29, 39
  spare part numbers 39
  specifications 104
hard drive hardware kit
  spare part number 29
heat sink
  spare part numbers 25
hinge
  spare part number 27
hinge brackets
  removal 83

hinge cover
removal 53
spare part numbers 53
Hinge Kit
spare part number 28
hot keys
microphone mute 17
using 17
HP PC Hardware Diagnostics (UEFI)
using 90
HP Recovery Manager
correcting boot problems 96
starting 95
HP Recovery media
creating 92
recovery 95
HP Recovery partition
recovery 95
removing 97
HP Sure Start 117

I
integrated numeric keypad, identifying 16
integrated webcam light, identifying 10
internal microphones, identifying 10

J
jacks
audio-out (headphone)/audio-in (microphone) combo 7
network 8
RJ-45 (network) 8

K
Keyboard
spare part numbers 24
keyboard
product description 5
remval 47
spare part numbers 47
keypad
embedded numeric 15
integrated numeric 16
keys
esc 15, 16
fn 15, 16
function keys 15, 16
Windows application 15
Windows key 15, 16

L
labels
serial number 20
lights
battery 19
caps lock 12
drive 19
microphone mute 12
num lk 12
power 12, 19
RJ-45 (network) 8
webcam 10
wireless 12, 19

M
memory
nonvolatile 112
removal 50
spare part number 26
spare part numbers 50
volatile 112
memory card reader, identifying 8
memory module
product description 2
Micro SIM card slot, identifying 7
microphone
product description 3
microphone board
removal 85
Microphone board, spare part numbers 30
microphone mute key, identifying 17
microphone mute light, identifying 12
minimized image recovery 95
minimized image, creating 94
model name 1

N
near field communication (NFC) cable
spare part number 30, 74
near field communication (NFC) module
spare part number 30, 74
network jack, identifying 8
NFC
removal 74
spare part numbers 74
NFC antenna, identifying 10
nonvolatile memory 112
num lk light 12

O
operating system, product description 5
optical drive
product description 3
removal 45
spare part number 26
spare part numbers 29, 45
optical drive board
removal 62
spare part number 25
spare part numbers 62
optical drive eject button, identifying 9
optical drive, identifying 9
optical drive/Blu-ray combo
spare part number 30, 45, 50
optical drive/DVD combo
spare part number 30, 45
original system recovery 94

P
panel
spare part number 27
plastics kit, spare part numbers 31
pointing device, product description 5
pointing stick 11
ports
Dual-Mode DisplayPort 7
external monitor 20
product description 4
serial 20
USB 3.x charging 7
USB Type-C charging 8
power button board
removal 69
spare part number 24
spare part numbers 25, 69
power button, identifying 13
power connector, identifying 8
power cord
set requirements 110

power lights 12, 19
power requirements, product description 5
processor
product description 1
product description
audio 3
chipset 1
display panel 1
docking 4
Ethernet 3
external media cards 4
graphics 1
hard drive 2
keyboard 5
memory module 2
microphone 3
operating system 5
optical drive 3
pointing device 5
ports 4
power requirements 5
processors 1
product name 1
security 5
serial port 3
serviceability 6
solid-state drive 2
video 3
wireless 3, 4
product name 1
product name and number, computer 20

R
recover
options 94
recovery
discs 93, 95
HP Recovery Manager 94
media 95
starting 95
supported discs 93
system 94
USB flash drive 95
using HP Recovery media 93
recovery media
creating 92
creating using HP Recovery Manager 93
recovery partition
removing 97
regulatory information 20
removal/replacement
procedures 37
removing personal data from volatile system memory 112
RJ-45 (network) jack, identifying 8
RJ-45 (network) lights, identifying 8
RTC battery
removal 66
spare part number 25
spare part numbers 66
Rubber Kit, spare part number 31

S
Screw Kit, spare part numbers 31
security cable slot, identifying 9
security, product description 5
serial board
removal 78
spare part number 78
spare part numbers 78
serial number 20
serial number, computer 20
serial port
spare part number 26
serial port, identifying 20
serial port, product description 3
service door
removal 37
spare part number 26, 37
service door, spare part number 37
serviceability, product description 6
setup utility
navigating and selecting 86
restoring factory settings 87
slots
security cable 9
smart card 9
smart card reader
removal 72
spare part numbers 72
smart card reader board
spare part number 24
smart card slot 9
solid-state drive
removal 41
spare part number 26, 29, 41
spare part numbers 41
specifications 107
speaker
removal 68
spare part number 26
spare part numbers 68
Speaker Kit, spare part number 31
speakers, identifying 13
specifications
computer 98
display 100, 103
hard drive 104
solid-state drive 107
SSD
product description 2
supported discs, recovery 93
Sure Start
using 89
system board
removal 57
spare part number 25
spare part numbers 57
system information
locating 20
system memory, removing personal data from volatile 112
system recovery 94
system restore point
creating 93
system restore point, creating 92

T
top cover
removal 63
spare part numbers 24, 63
TouchPad
buttons 11
removal 63
spare part number 25
spare part numbers 24, 63
TouchPad light, identifying 11
TouchPad zone
identifying 11
TPM settings 89

U
USB 3.x charging port, identifying 7
USB 3.x port 8
USB ports, identifying 8

USB Type-C charging port,
identifying 8

V
vents, identifying 9, 18
video, product description 3

W
warranty period 20
webcam 10
removal 84
spare part number 80
webcam light, identifying 10
webcam, identifying 10
webcam/microphone module
removal 85
Windows
system restore point 92, 93
Windows application key,
identifying 15
Windows key, identifying 15, 16
Windows tools
using 93
wireless antennas, identifying 10
wireless light 12, 19
wireless, product description 3, 4
WLAN
removal 43
spare part numbers 43
WLAN antenna cables
removal 84
WLAN antennas, identifying 10
WLAN cable
spare part number 28
WLAN cable, spare part number 28
WLAN module
spare part number 26, 43
WWAN
removal 42
spare part numbers 42
WWAN antenna cables
removal 84
WWAN antennas, identifying 10
WWAN cable
spare part number 28
WWAN module (select products only)
spare part number 26