HP ProBook 440 G4 Notebook PC

Maintenance and Service Guide

© Copyright 2016 HP Development Company, L.P.

AMD is a trademark of Advanced Micro Devices, Inc. Bluetooth is a trademark owned by its proprietor and used by HP Inc. under license. Intel is a trademark of Intel Corporation in the U.S. and other countries. Microsoft and Windows are trademarks of the Microsoft group of companies.

The information contained herein is subject to change without notice. The only warranties for HP products and services are set forth in the express warranty statements accompanying such products and services. Nothing herein should be construed as constituting an additional warranty. HP shall not be liable for technical or editorial errors or omissions contained herein.

First Edition: September 2016

Document Part Number: 903114-001

Product notice

This user guide describes features that are common to most models. Some features may not be available on your computer.

Not all features are available in all editions of Windows. This computer may require upgraded and/or separately purchased hardware, drivers and/or software to take full advantage of Windows functionality. Go to http://www.microsoft.com for details.

Your product does not support Windows 8 or Windows 7

In accordance with Microsoft's support policy, HP does not support the Windows 8 or Windows 7 operating system on this product or provide any Windows 8 or Windows 7 drivers on http://support.hp.com.

Software terms

By installing, copying, downloading, or otherwise using any software product preinstalled on this computer, you agree to be bound by the terms of the HP End User License Agreement (EULA). If you do not accept these license terms, your sole remedy is to return the entire unused product (hardware and software) within 14 days for a full refund subject to the refund policy of your seller.

For any further information or to request a full refund of the price of the computer, please contact your seller.

Important Notice about Customer Self-Repair Parts

⚠ **CAUTION:** Your computer includes Customer Self-Repair parts and parts that should only be accessed by an authorized service provider. See Chapter 5, "Removal and replacement procedures for Customer Self-Repair parts," for details. Accessing parts described in Chapter 6, "Removal and replacement procedures for Authorized Service Provider only parts," can damage the computer or void your warranty.

Safety warning notice

⚠ **WARNING!** To reduce the possibility of heat-related injuries or of overheating the computer, do not place the computer directly on your lap or obstruct the computer air vents. Use the computer only on a hard, flat surface. Do not allow another hard surface, such as an adjoining optional printer, or a soft surface, such as pillows or rugs or clothing, to block airflow. Also, do not allow the AC adapter to contact the skin or a soft surface, such as pillows or rugs or clothing, during operation. The computer and the AC adapter comply with the user-accessible surface temperature limits defined by the International Standard for Safety of Information Technology Equipment (IEC 60950-1).

Table of contents

1 Product description 1

2 Components 6

Right 6

Left 7

Display 8

Top 9

TouchPad 9

Lights 10

Buttons, speakers, and fingerprint reader 11

Special function keys 12

Using the hot keys 13

Bottom 14

Labels 15

3 Illustrated parts catalog 16

Computer major components 16

Cable Kit 19

Display components 20

Plastics Kit 22

Mass storage devices 23

Miscellaneous parts 24

4 Removal and replacement procedures preliminary requirements 26

Tools required 26

Service considerations 26

Plastic parts 26

Cables and connectors 27

Drive handling 27

Grounding guidelines 28

Electrostatic discharge damage 28

Packaging and transporting guidelines 29

Workstation guidelines 29

Equipment guidelines 30

5 Removal and replacement procedures for Customer Self-Repair parts 31
Component replacement procedures 31
Battery Safe mode 31
Service doors 32
Hard drive 34
Memory modules 36
WLAN/Bluetooth combo card 38
WWAN module 40
M.2 solid-state drive 42
Keyboard 43

6 Removal and replacement procedures for Authorized Service Provider parts 46
Component replacement procedures 46
Display subcomponents (bezel, webcam, panel) 46
Top cover 50
Fingerprint reader assembly 53
Power button board 55
Function board 57
Speaker assembly 59
TouchPad assembly 60
Battery 62
USB/audio board 64
Fan 66
System board 68
RTC battery 71
Heat sink assembly 72
Display assembly 75
Power connector and cable 82

7 Computer Setup (BIOS), TPM, and HP Sure Start 83
Using Computer Setup 83
Starting Computer Setup 83
Navigating and selecting in Computer Setup 83
Restoring factory settings in Computer Setup 83
Updating the BIOS 84
Determining the BIOS version 84
Downloading a BIOS update 85
Changing the boot order using the f9 prompt 85
TPM BIOS settings (select products only) 86
Using HP Sure Start (select products only) 86

8 Using HP PC Hardware Diagnostics (UEFI) 87
Downloading HP PC Hardware Diagnostics (UEFI) to a USB device 87
Blink and beep codes 88

9 Backup and recovery 89
Creating recovery media and backups 89
Creating HP Recovery media (select products only) 89
Using Windows tools 90
Restore and recovery 91
Recovering using HP Recovery Manager 91
What you need to know before you get started 91
Using the HP Recovery partition (select products only) 92
Using HP Recovery media to recover 92
Changing the computer boot order 93
Removing the HP Recovery partition (select products only) 94

10 Specifications 95
Computer specifications 95
35.6-cm (14.0-in) display specifications 96
Hard drive specifications 97
Solid-state drive specifications 98

11 Statement of memory volatility 99
Nonvolatile memory usage 102
Questions and answers 104
Using HP Sure Start (select models only) 105

12 Power cord set requirements 106
Requirements for all countries and regions 106
Requirements for specific countries and regions 106

13 Recycling 108

Index 109

1 Product description

Category	Description	UMA	Discrete
Product Name	**HP ProBook 440 G4 Notebook PC**	√	√
Processors	**7th generation, Intel® Core™ i7 processor, Dual Core** (4-MB L3 cache, 15 W)[x]	√	√
	7500U, 2.7 GHz/3.5 GHz Single Core Turbo; Intel HD Graphics 620		
	7th generation, Intel Core i5 processors, Dual Core (3-MB L3 cache, 15 W)		
	7200U, 2.5-GHz/3.1-GHz Single Core Turbo processor; Intel HD Graphics 620		
	7th generation, Intel Core i3 processors, Dual Core (3-MB L3 cache, 15 W)		
	7100U, 2.4-GHz processor; Intel HD Graphics 620		
	Intel Pentium Dual Core processor (2-MB L3 cache, 15 W)		
	4415U, 2.3-GHz processor; Intel HD Graphics		
	Intel Celeron Dual Core processor (2-MB L3 cache, 15 W)		
	3865U, 1.8-GHz processor; Intel HD Graphics		
Graphics	**Integrated UMA Graphics GT1 and GT2**	√	
	Integrated with shared video memory; dynamically allocated		
	Switchable discrete graphics		√
	Nvidia GeForce 930MX with 2 GB dedicated video memory		
	Supports HD decode, DX12, HDMI		
	Supports CUDA, Optimus, PhysX, GPU Boost 2.0		
Panel	**35.6 cm (14.0-inch), LED backlight, 16:9 aspect ratio, anti-glare, SVA, HD (1366x768), 220 nits; eDP HD slim (3.0 mm)**	√	
	1 or 2 WLAN antennas		
	Webcam, 1 or 2 WLAN antennas		
	Webcam, 1 or 2 WLAN antennas, WWAN		
	35.6 cm (14.0-inch), LED backlight, 16:9 aspect ratio, HD (1366x768), 220 nits; eDP HD slim (3.0 mm)		
	Touch panel, 1 or 2 WLAN antennas		
	35.6 cm (14.0-inch), LED backlight, 16:9 aspect ratio, anti-glare, SVA, HD (1920x1080), 220 nits; eDP FHD Slim (3.0 mm)		
	1 or 2 WLAN antennas		
	Webcam, 1 or 2 WLAN antennas		
	Webcam, 2 WLAN antennas, 2 WWAN antennas		
	35.6 cm (14.0-inch), LED backlight, 16:9 aspect ratio, anti-glare, SVA, HD (1366x768), 220 nits; eDP HD slim (3.0 mm)	√	√
	Webcam, 1 or 2 WLAN antennas		

Category	Description	UMA	Discrete
	35.6 cm (14.0-inch), LED backlight, 16:9 aspect ratio, HD (1366x768), 220 nits; eDP HD slim (3.0 mm) Touch panel, 1 or 2 WLAN antennas **35.6 cm (14.0-inch), LED backlight, 16:9 aspect ratio, anti-glare, SVA, HD (1920x1080), 220 nits; eDP FHD Slim (3.0 mm)** Webcam, 1 or 2 WLAN antennas		
Memory	Two customer-accessible memory module slots supporting up to 16 GB of RAM Supports dual-channel memory PC4-17000, 2133-MHz, DDR4 SODIMMs Supports the following configurations: • 16384 MB (8192 × 2; dual channel) • 12288 MB (8192 + 4096; dual channel) • 8192 MB (8192 × 1) • 8192 MB (4096 × 2; dual channel) • 4096 MB (4096 × 1) For use in Brazil: • 16384 MB (8192 × 2; dual channel) • 8192 MB (8192 × 1) • 8192 MB (4096 × 2; dual channel) • 4096 MB (4096 × 1)	√	√
Primary storage	Supports hard drives with HP 3D DriveGuard Customer-accessible Supports the following 7 mm, 2.5 inch hard drives: • 1-TB, 5400-rpm • 500-GB, 7200-rpm • 500-GB, hybrid (8-GB SSD) • 500-GB, 5400-rpm	√	√
Primary M.2 storage	**M.2 2280 SSD (NGFF), SATA-3** Supports the following drives: • 256 GB • 128 GB	√	√
Audio/Visual	Audio controls Integrated camera (720p HD) Stereo speakers (2) Integrated dual-array microphone (webcam models only) Headphone/microphone combo jack	√	√
	Supports “no camera” option	√	

Category	Description	UMA	Discrete
	Integrated mono microphone (non-webcam models only)		
Ethernet	Realtek RTL8111HSH 10/100/1000	√	√
	S3/S4/S5 wake on LAN (AC mode and battery mode)		
Wireless	**Integrated WLAN options by way of wireless module**	√	√
	WLAN antennas built into display assembly		
	Supports “no WLAN/Bluetooth” option		
	Supports the following wireless adapters: • Realtek RTL8723BE-VB 802.11b/g/n 1x1 Wi-Fi + Bluetooth 4.0 combination WLAN adapter • Intel Dual Band Wireless-AC 3168 802.11ac, Dual Band, 1×1 Wi-Fi + Bluetooth 4.0 • Intel Dual Band Wireless-AC 8265, 802.11ac, 2×2 Wi-Fi + Bluetooth 4.2 combination adapter • Intel Dual Band Wireless-AC 7265NV (non v-Pro) 802.11ac 2×2 WiFi + Bluetooth 4.2 combination adapter		
	Wireless Personal Area Network (PAN) Bluetooth		
	Bluetooth 4.0 supported using combo card		
	Integrated WWAN options by way of wireless module		
	SIM module: Micro SIM/3FF (user accessible under service door)		
	WWAN options using connector		
	Huawei HP It4132, LTE/HSPA+ w/GPS M.2		
	WWAN antennas (2), worldwide, 5 band, configured at top of panel		
	Supports “No WWAN” option		
External media card	**Digital Media Reader Slot**	√	√
	Supports SD, SDHC, SDXC		
Ports	Headphone/microphone combo jack	√	√
	RJ-45 (Ethernet, includes link and activity lights)		
	USB 3.0		
	USB 2.0 + powered port		
	USB Type-C		
	VGA (Dsub 15-pin) supporting 2048 × 1536 external resolution at 60-GHz (hot plug/unplug with auto-detect)		
	HDMI 1.4		
	Multi-pin AC port		
Keyboard/ pointing devices	**Keyboard**	√	√
	HP Premium Keyboard		
	Full-sized, chiclet, spill-resistant keyboard (backlit or not backlit)		
	Touchpad requirements		

Category	Description	UMA	Discrete
	Windows 10 gestures: taps enabled by default: on/off control by driver, 2-finger scrolling and zoom enabled by default, OSD (enable/disable), 3-finger tap - Cortana, 3- finger flick - App switch, 4-finger tap - Action Center		
Power requirements	**AC adapters**	√	√
	65-W Smart AC adapter, 4.5 mm		
	45-W Smart AC adapter, 4.5 mm		
	45-W Smart AC adapter, 2-prong, 4.5 mm		
	Power cords		
	3-wire plug - 1.8 m		
	3-wire plug - 1.0 m		
	2-wire plug - 1.0 m		
	Battery		
	3-cell, 48-Wh, 4.21-Whr Li-ion battery		
Security	Integrated fingerprint reader	√	√
	Supports “No fingerprint reader” option		
	Security lock		
	TPM 2.0 SLB9670 (Infineon; soldered down)		
Operating system	**Operating system version**[x]	√	√
	Windows 10: Threshold 2		
	Preinstalled		
	Windows 10 Home 64		
	Windows 10 Home 64 Single Language		
	Windows 10 Home 64 StF MSNA for Higher Education - Strategic		
	Windows 10 Home 64 High-end		
	Windows 10 Home 64 High-end Single Language		
	Windows 10 Professional 64		
	Windows 10 Professional 64 - StF MSNA - Standard		
	Windows 10 Professional 64 - StF MSNA - High End		
	Windows 10 Professional 64 - StF MSNA - Strategic		
	FreeDOS 2.0		
	Restore Media (DRDVD/SRDVD)	√	√
	DRDVD Windows 10		
	Restore Media (OSDVD)	√	√
	Windows 10 Professional 64		
	Web-only support	√	√
	Windows 10 Enterprise		
	Certified	√	√

Category	Description	UMA	Discrete
	Microsoft WHQL		
Serviceability	**End-user replaceable parts**	√	√
	AC adapter		
	Hard drive		
	Optical drive		
	M.2 solid-state drive		
	Memory module		
	WLAN module		
	Keyboard		

[x] **Your product does not support Windows 8 or Windows 7**. In accordance with Microsoft's support policy, HP does not support the Windows 8 or Windows 7 operating system on this product or provide any Windows 8 or Windows 7 drivers on http://www.support.hp.com.

2 Components

Right

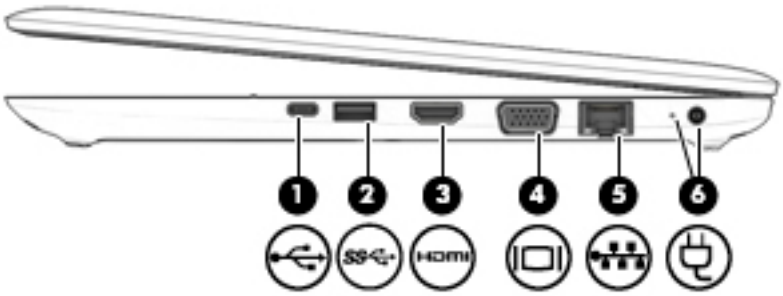

Component			Description
(1)		USB Type-C charging port	Connects any USB device with a Type-C connector and can charge products such as cell phones, laptops, tablets, and MP3 players.
(2)		USB 3.0 port	Connects an optional USB device, such as a keyboard, mouse, external drive, printer, scanner or USB hub.
(3)		HDMI port	Connects an optional video or audio device, such as a high-definition television, any compatible digital or audio component, or a high-speed High Definition Multimedia Interface (HDMI) device.
(4)		External monitor port	Connects an external VGA monitor or projector.
(5)		RJ-45 (network) jack/status lights	Connects a network cable. • Green (left): The network is connected. • Amber (right): Activity is occurring on the network.
(6)		Power connector	Connects an AC adapter.

Left

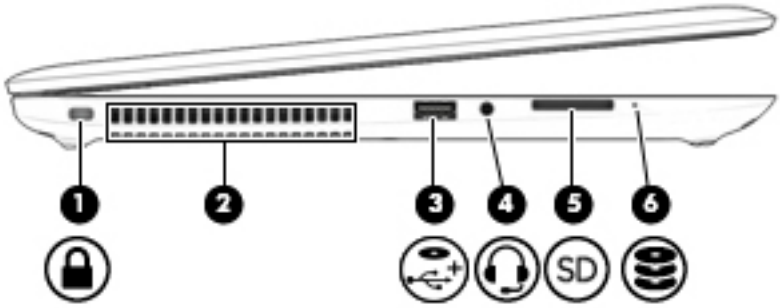

Component			Description
(1)		Security cable slot	Attaches an optional security cable to the computer. **NOTE:** The security cable is designed to act as a deterrent, but it may not prevent the computer from being mishandled or stolen.
(2)		Vent	Enables airflow to cool internal components. **NOTE:** The computer fan starts up automatically to cool internal components and prevent overheating. It is normal for the internal fan to cycle on and off during routine operation.
(3)		USB 2.0 charging port	Connects an optional USB device, such as a keyboard, mouse, external drive, printer, scanner or USB hub and can charge products such as cell phones, laptops, tablets, and MP3 players.
(4)		Audio-out (headphone)/Audio-in (microphone) combo jack	Connects optional powered stereo speakers, headphones, earbuds, a headset, or a television audio cable. Also connects an optional headset microphone. This jack does not support optional standalone microphones. **WARNING!** To reduce the risk of personal injury, adjust the volume before putting on headphones, earbuds, or a headset. For additional safety information, refer to the *Regulatory, Safety, and Environmental Notices*. To access this guide: 1. Type `support` in the taskbar search box, and then select the **HP Support Assistant** app. – or – Click the question mark icon in the taskbar. 2. Select **My PC**, select the **Specifications** tab, and then select **User Guides**. **NOTE:** When a device is connected to the jack, the computer speakers are disabled.
(5)	SD	Memory card reader	Reads optional memory cards that store, manage, share, or access information.
(6)		Drive light	• Blinking white: The hard drive is being accessed. • Amber: HP 3D DriveGuard has temporarily parked the hard drive.

Display

NOTE: Refer to the illustration that most closely matches your computer.

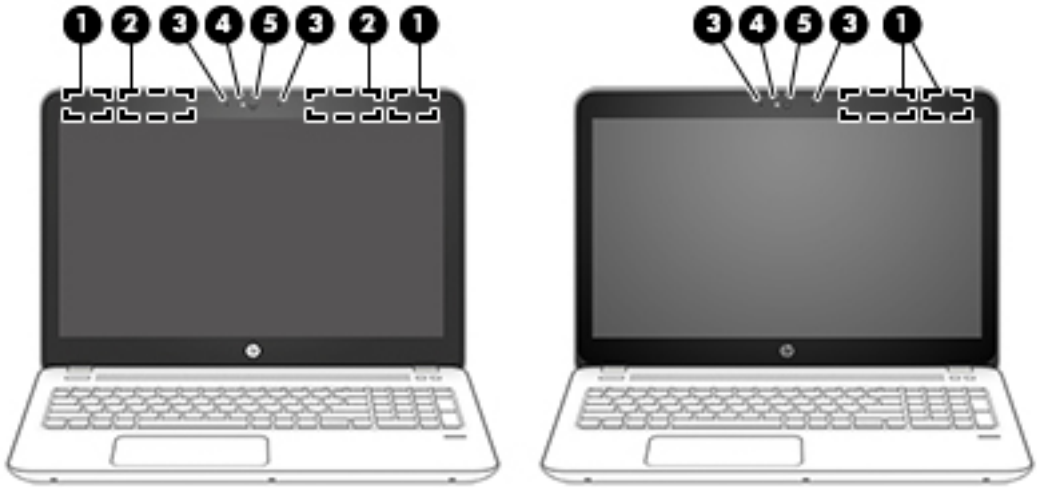

Component		Description
(1)	WLAN antennas* (select products only)	Send and receive wireless signals to communicate with wireless local area networks (WLANs).
(2)	WWAN antennas* (select products only)	Send and receive wireless signals to communicate with wireless wide area networks (WWANs).
(3)	Internal microphones (1 or 2 depending on model)	Record sound.
(4)	Webcam light (select products only)	On: The webcam is in use.
(5)	Webcam (select products only)	Records video and captures photographs. Some models allow you to video conference and chat online using streaming video. To use the webcam: ▲ Type `camera` in the taskbar search box, and then select **Camera**.

*The antennas are not visible from the outside of the computer. For optimal transmission, keep the areas immediately around the antennas free from obstructions.

For wireless regulatory notices, see the section of the *Regulatory, Safety, and Environmental Notices* that applies to your country or region.

To access this guide:

1. Type `support` in the taskbar search box, and then select the **HP Support Assistant** app.

   – or –

   Click the question mark icon in the taskbar.

2. Select **My PC**, select the **Specifications** tab, and then select **User Guides**.

Top

TouchPad

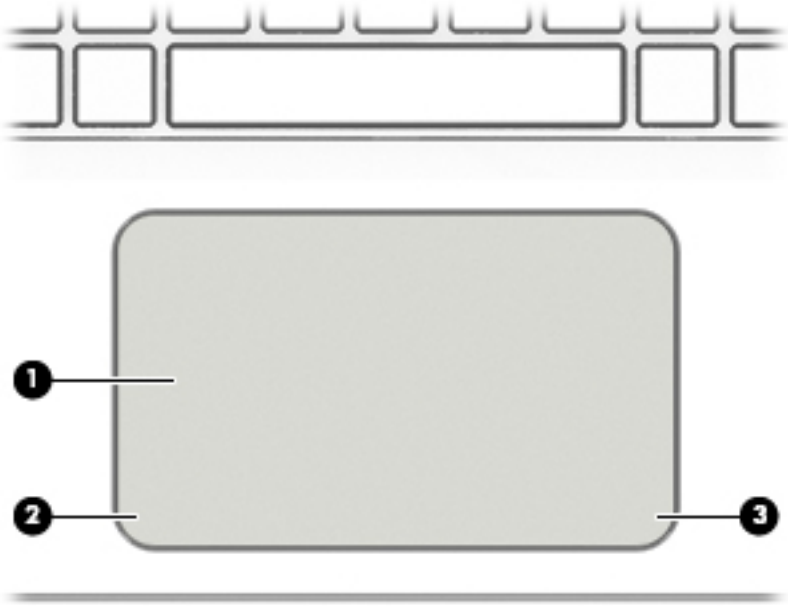

Component		Description
(1)	TouchPad zone	Reads your finger gestures to move the pointer or activate items on the screen.
(2)	Left TouchPad button	Functions like the left button on an external mouse.
(3)	Right TouchPad button	Functions like the right button on an external mouse.

Lights

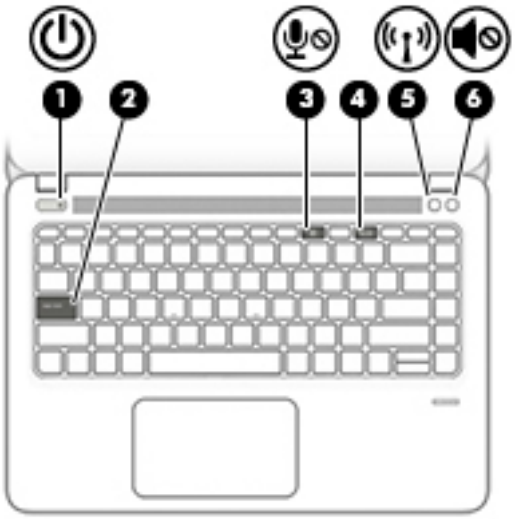

Component			Description
(1)		Power light	• On: The computer is on. • Blinking: The computer is in the Sleep state, a power-saving state. The computer shuts off power to the display and other unneeded components. • Off: The computer is off or in Hibernation. Hibernation is a power-saving state that uses the least amount of power.
(2)		Caps lock light	On: Caps lock is on, which switches the key input to all capital letters.
(3)		Microphone mute light	• Amber: microphone sound is off. • Off: microphone sound is on.
(4)		Num lock light	On: Num lock is on.
(5)		Wireless light	On: An integrated wireless device, such as a wireless local area network (WLAN) device and/or a Bluetooth® device, is on. **NOTE:** On some models, the wireless light is amber when all wireless devices are off.
(6)		Mute light	• Amber: Computer sound is off. • White: Computer sound is on.

Buttons, speakers, and fingerprint reader

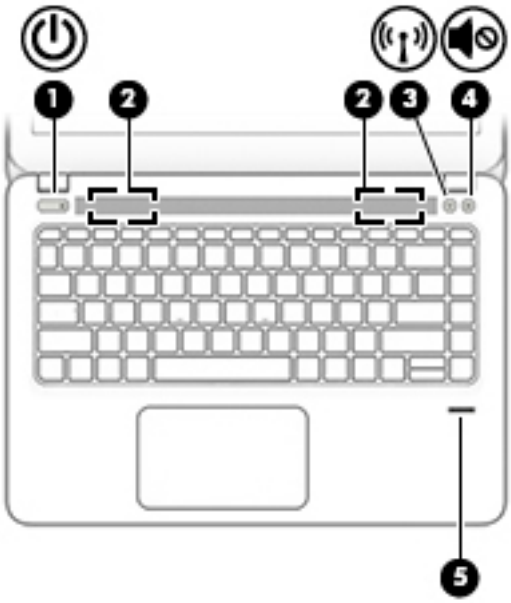

Component		Description
(1)	Power button	• When the computer is off, press the button to turn on the computer. • When the computer is on, press the button briefly to initiate Sleep. • When the computer is in the Sleep state, press the button briefly to exit Sleep. • When the computer is in Hibernation, press the button briefly to exit Hibernation. **CAUTION:** Pressing and holding down the power button results in the loss of unsaved information. If the computer has stopped responding and shutdown procedures are ineffective, press and hold the power button for at least 5 seconds to turn off the computer. To learn more about your power settings, see your power options. ▲ Type `power` in the taskbar search box, and then select **Power and sleep settings**. – or – Right-click the **Start** button, and then select **Power Options**.
(2)	Speakers (2)	Produce sound.
(3)	Wireless button	Turns the wireless feature on or off but does not establish a wireless connection. A wireless network must be set up before a wireless connection is possible.
(4)	Volume mute button	Mutes and restores speaker sound.
(5)	Fingerprint reader (select products only)	Allows a fingerprint logon to Windows, instead of a password logon.

Special function keys

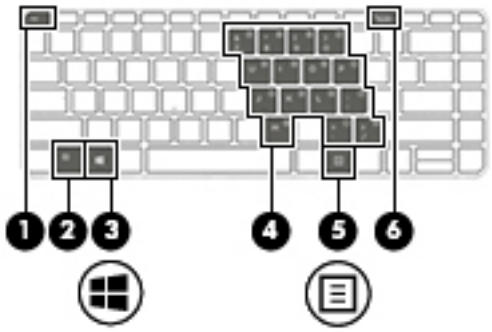

Component		Description
(1)	esc key	Displays system information when pressed in combination with the fn key.
(2)	fn key	Executes frequently used system functions when pressed in combination with a function key, the num lock key, or the the esc key. See Using the hot keys on page 13.
(3)	Windows key	Opens the **Start** menu. **NOTE:** Pressing the Windows key again will close the **Start** menu.
(4)	Embedded numeric keypad	A numeric keypad superimposed over the keyboard alphabet keys that enables you to add, subtract, and perform other numeric tasks. When num lock is on, the keypad can be used like an external numeric keypad.
(5)	Windows application key	Displays options for a selected object.
(6)	num lock key	Alternates between the navigational and numeric functions on the integrated numeric keypad.

Using the hot keys

To use a hot key:

▲ Press the fn key, and then press the correct function key represented by the icons below.

Press fn+function key	Description
	Initiates Sleep, which saves your information in system memory. The display and other system components turn off and power is conserved. To exit Sleep, briefly press the power button. **CAUTION:** To reduce the risk of information loss, save your work before initiating Sleep.
	Turns the keyboard backlight off or on. **NOTE:** To conserve battery power, turn off this feature.
	Switches the screen image between display devices connected to the system. For example, if a monitor is connected to the computer, repeatedly pressing this key alternates the screen image from the computer display to the monitor display to a simultaneous display on both the computer and the monitor.
	Decreases the screen brightness incrementally as long as you hold down the key.
	Increases the screen brightness incrementally as long as you hold down the key.
	Decreases speaker volume incrementally while you hold down the key.
	Increases speaker volume incrementally while you hold down the key.
	Mutes the microphone.

Bottom

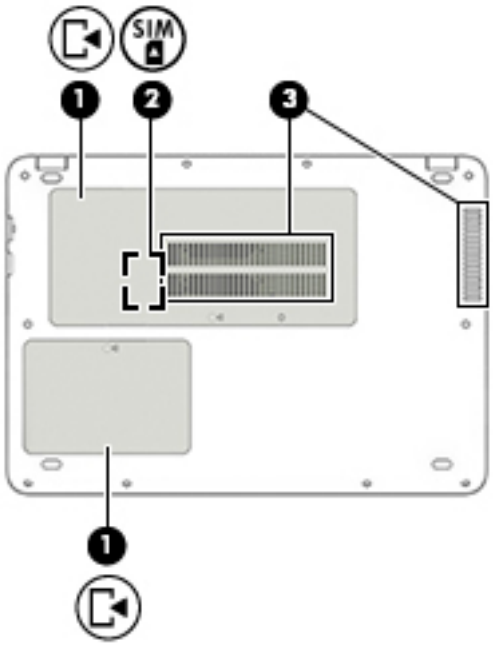

Component		Description
(1)	Service doors	Provides access to the hard drive bay, the WLAN module slot, the WWAN module slot, the SIM card slot, and the memory module slots. **CAUTION:** To prevent an unresponsive system, replace the wireless module only with a wireless module authorized for use in the computer by the governmental agency that regulates wireless devices in your country or region. If you replace the module and then receive a warning message, remove the module to restore computer functionality, and then contact support. ▲ Type `support` in the taskbar search box, and then select the **HP Support Assistant** app. - or - Click the question mark icon in the taskbar.
(2)	SIM card slot or locking hinged connector (select products only)	Supports a wireless subscriber identity module (SIM) card. The SIM card slot or locking hinged connector is located under the service door.
(3)	Vents (2)	Enable airflow to cool internal components. **NOTE:** The computer fan starts up automatically to cool internal components and prevent overheating. It is normal for the internal fan to cycle on and off during routine operation.

Labels

The labels affixed to the computer provide information you may need when you troubleshoot system problems or travel internationally with the computer.

IMPORTANT: Check the following locations for the labels described in this section: the bottom of the computer, inside the battery bay, under the service door, or on the back of the display.

- Service label—Provides important information to identify your computer. When contacting support, you will probably be asked for the serial number, and possibly for the product number or the model number. Locate these numbers before you contact support.

  Your service label will resemble one of the examples shown below. Refer to the illustration that most closely matches the service label on your computer.

Component	
(1)	Serial number
(2)	Product number
(3)	Warranty period
(4)	Model number (select products only)

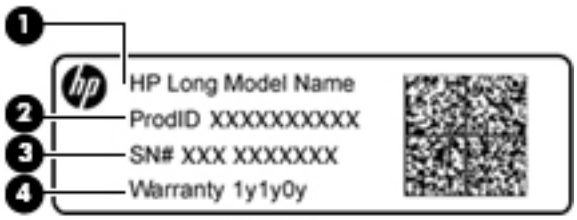

Component	
(1)	HP product name
(2)	Product ID number
(3)	Serial number
(4)	Warranty period

- Regulatory label(s)—Provide(s) regulatory information about the computer.
- Wireless certification label(s)—Provide(s) information about optional wireless devices and the approval markings for the countries or regions in which the devices have been approved for use.

3 Illustrated parts catalog

Computer major components

NOTE: HP continually improves and changes product parts. For complete and current information on supported parts for your computer, go to http://partsurfer.hp.com, select your country or region, and then follow the on-screen instructions.

NOTE: Details about your computer, including model, serial number, product key, and length of warranty, are on the service tag at the bottom of your computer. See Labels on page 15 for details.

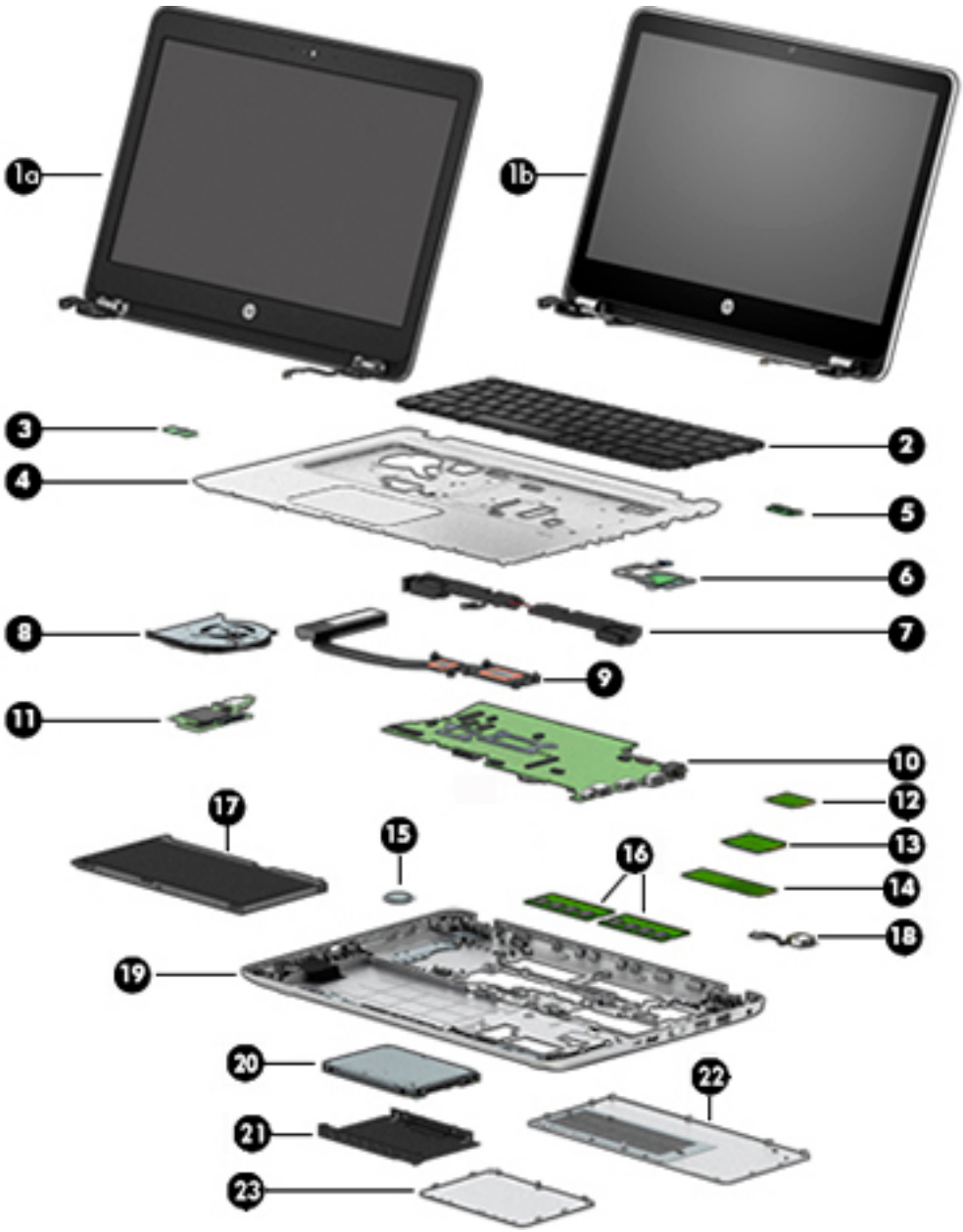

Item	Description	Spare part number
(1a)	**Display panel assembly**, touch screen Touch display are only spared as entire hinge-ups. Individual components are not spared.	906973-001
(1b)	**Display panel assembly**, non-touch Non-touch displays are ONLY spared at the subcomponent level. For more information about display components, see Display components on page 20.	not spared
(2)	**Keyboard** (includes cable) **NOTE:** For a detailed list of keyboard country codes, see Keyboard on page 43.	
	No backlight	906764-xxx
	Backlit	906763-xxx
(3)	**Power button board**	905712-001
(4)	**Top cover** (includes touchpad assembly)	905702-001
(5)	**Function board**	905710-001
(6)	**Fingerprint reader assembly** (includes cable)	905704-001
(7)	**Speaker assembly**	905705-001
(8)	**Fan**	905706-001
	Heat sink assembly (includes replacement thermal material)	
	Models with UMA graphics	910980-001
(9)	Models with discrete graphics	910981-001
(10)	**System board** (includes replacement thermal material) All system boards use the following part numbers: xxxxxx-001: Non-Windows operating system xxxxxx-601: Windows 10 operating system	
	Models with UMA graphics:	
	• Intel Core i7-7500U processor	905797-xxx
	• Intel Core i5-7300U processor	905796-xxx
	• Intel Core i5-7200U processor (WWAN models)	905795-xxx
	• Intel Core i5-7200U processor	905794-xxx
	• Intel Core i3-7100U processor (WWAN models)	905793-xxx
	• Intel Core i3-7100U processor	905792-xxx
	Models with 2 GB of discrete graphics:	
	• Intel Core i7-7500U processor	913101-xxx
	• Intel Core i5-7300U processor	913100-xxx
	• Intel Core i3-7100U processor	913099-xxx
(11)	**USB/audio board**	905713-001
(12)	**WLAN module**	

Item	Description	Spare part number
	Realtek RTL8723BE-VB 802.11b/g/n 1x1 Wi-Fi + Bluetooth 4.0 combination adapter	843338-001
	Intel Dual Band Wireless-AC 3168 802.11ac, 1×1 Wi-Fi + Bluetooth 4.0 combination adapter	852511-001
	Intel Dual Band Wireless-AC 8265, 802.11ac, 2×2 Wi-Fi + Bluetooth 4.2 combination adapter	851594-001
	Intel Dual Band Wireless-AC 7265NV (non v-Pro) 802.11ac 2×2 WiFi + Bluetooth 4.2 combination adapter	860883-001
(13)	**WWAN module** (Huawei HP It4132, LTE/HSPA+ w/GPS M.2)	845710-001
(14)	**M.2 solid-state drive**	
	256-GB	906972-001
	128-GB	906971-001
(15)	**RTC battery**	not spared
(16)	**Memory modules** (PC4-17000)	
	8-GB	820570-001
	4-GB	820569-001
(17)	**Battery, Li-ion (4-cell, 48 WHr, 4.21 Ah)**	851610-855
(18)	**Power connector cable**	905644-001
(19)	**Base enclosure**	905701-001
(20)	**Hard drive**	
	1 TB, 5400 rpm, 7 mm	832077-001
	500 GB, 5400 rpm, 7 mm	778186-001
	500 GB, 5400 rpm, 7 mm, hybrid (8-GB SSD)	732000-001
	500 GB, 7200 rpm, 7 mm	778189-001
(21)	**Hard drive cover**	905708-001
	NOTE: The hard drive cover is included in the Hard Drive Hardware Kit.	
(22)	**Main service door**	905703-001
	NOTE: The main service door is included in the Plastic Kit.	
(23)	**Hard drive service door**	905708-001
	NOTE: The hard drive service door is included in the Hard Drive Hardware Kit.	

Cable Kit

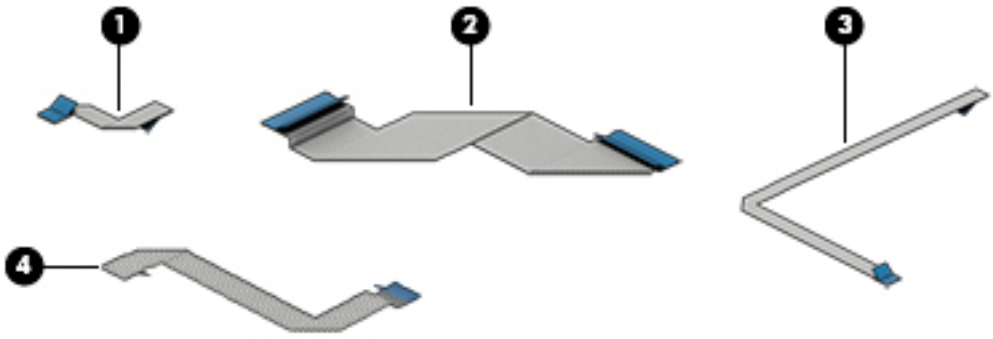

Item	Description	Spare part number
	Cable Kit	905707-001
(1)	Function board cable	
(2)	USB board cable	
(3)	Power button board cable	
(4)	TouchPad cable	

Display components

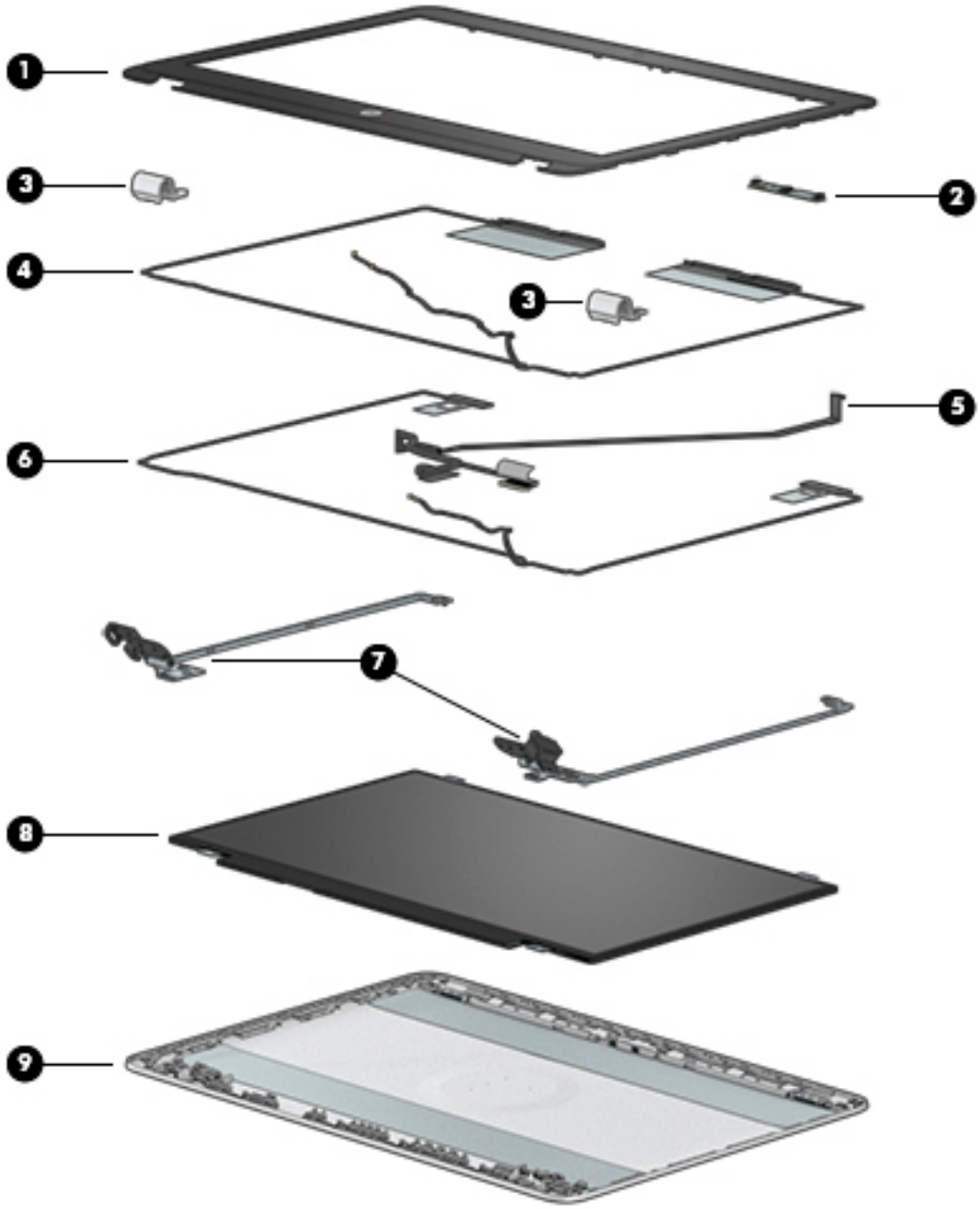

Item	Description	Spare part number
(1)	**Display bezel**	
	Models without a webcam	905693-001
	Models with a webcam	905692-001
(2)	**Webcam module**	805139-009
(3)	**Hinge covers** (left and right)	905699-001
(4)	**WLAN antennas**	not spared

Item	Description	Spare part number
	NOTE: Included in display enclosure	
(5)	**Display/webcam cable assembly**	
	WLAN models	905696-001
	WWAN models	905697-001
(6)	**WWAN antennas** **NOTE:** Included in display enclosure	not spared
(7)	**Display Hinge Kit**, includes:	905698-001
	Left hinge	
	Right hinge	
(8)	**Display panel (raw)**	
	FHD	809002-002
	HD	839668-002
(9)	**Display rear cover** (includes wireless antennas)	
	WLAN models	905694-001
	WWAN models	905695-001

Plastics Kit

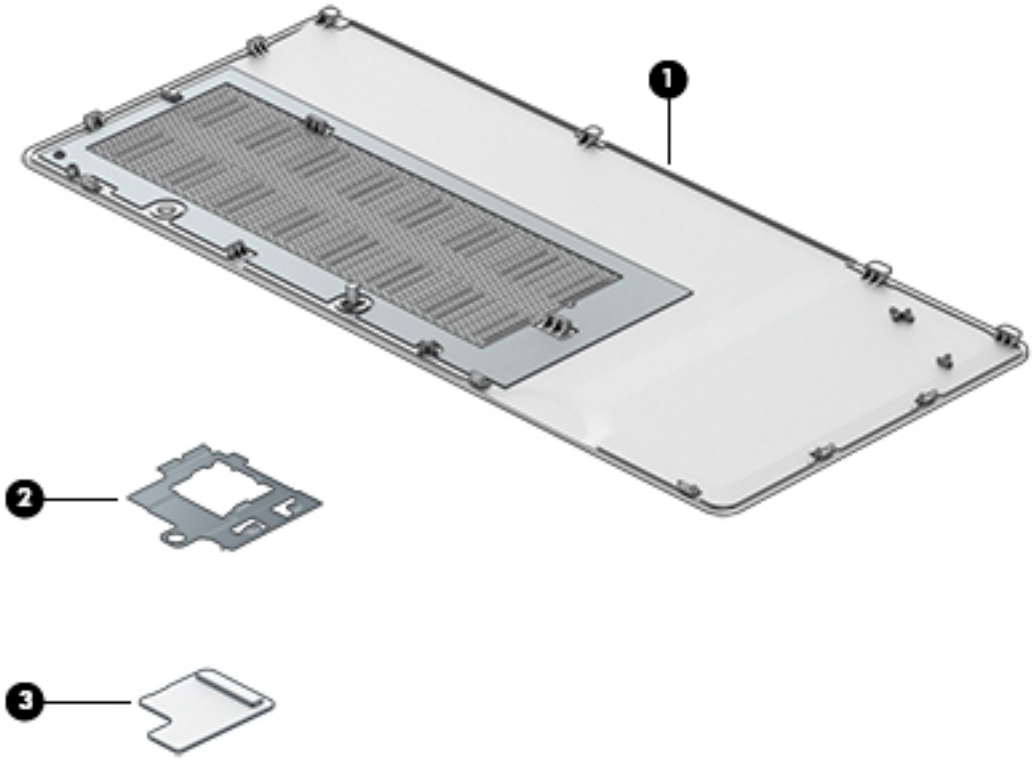

Item	Description	Spare part number
	Plastics Kit	905703-001
(1)	Main service door	
(2)	Fingerprint reader bracket	
(3)	Fingerprint reader insert (for use in models without a fingerprint reader)	

Mass storage devices

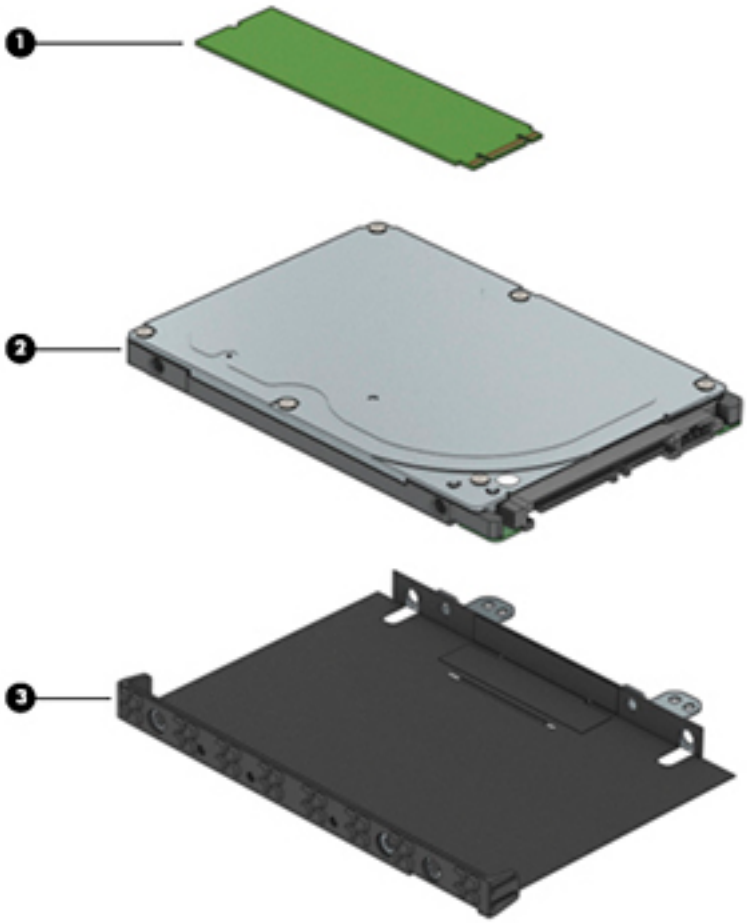

Item	Description	Spare part number
(1)	**Solid-state drive**, M.2	
	256-GB	906972-001
	128-GB	906971-001
(2)	**Hard drive**	
	1 TB, 5400 rpm, 7 mm	832077-001
	500 GB, 5400 rpm, 7 mm	778186-001
	500 GB, 5400 rpm, 7 mm, hybrid (8-GB SSD)	732000-001
	500 GB, 7200 rpm, 7 mm	778189-001
(3)	**Hard drive cover** (included in Hard Drive Hardware Kit)	905708-001

Miscellaneous parts

Description	Spare part number
AC adapters	
65-W Smart AC power adapter, 4.5 mm barrel connector (for use in India and the People's Republic of China)	714657-001
65-W Smart AC power adapter, 4.5 mm barrel connector	710412-001
45-W Smart AC power adapter, 4.5 mm barrel connector	741727-001
45-W Smart AC power adapter, 4.5 mm barrel connector, 2 prong	742436-001
Power cord (3-pin, C5, black, 1.83-m), for use in:	
Australia	213356-001
Denmark	213353-001
Europe (Austria, Belgium, Finland, France, Germany, the Netherlands, Norway and Sweden)	213350-001
India	404827-001
Israel	398063-001
Italy	213352-001
Japan	349756-001
North America	213349-001
South Africa	361240-001
South Korea	267836-001
Switzerland	213354-001
Taiwan	393313-001
Thailand	285096-001
United Kingdom and Singapore	213351-001
Power cord (3-pin, C5, black, 1.00-m), for use in:	
Australia	213356-008
Denmark	213353-008
Europe (Austria, Belgium, Finland, France, Germany, the Netherlands, Norway and Sweden)	213350-009
India	404827-003
Israel	398063-003
Italy	213352-008
Japan	349756-002
North America	213349-009
South Africa	361240-002
South Korea	267836-008
Switzerland	213354-008

Description	Spare part number
Taiwan	393313-003
Thailand	285096-006
United Kingdom and Singapore	213351-008
Power cord (3-pin, C7, black, 1.00-m), for use in:	
Japan	190548-003
Screw Kit	912377-001
Mouse	
HP USB Laser Mouse	674318-001
HP Comfort Grip Wireless Mouse	691922-001
HP USB Travel Mouse	757770-001
Cases	
Top load case	679921-001
Messenger bag	679922-001
Backpack	679923-001
HP keyed cable lock	840158-001
HP ultraslim keyed cable lock	703372-001
HP Smart AC Adapter dongle, 7.4 mm	734734-001
USB 3.0 port replicator	690650-001

4 Removal and replacement procedures preliminary requirements

Tools required

You will need the following tools to complete the removal and replacement procedures:

- Flat-bladed screwdriver
- Phillips P0 and P1 screwdrivers
- Torx T8 screwdriver

Service considerations

The following sections include some of the considerations that you must keep in mind during disassembly and assembly procedures.

NOTE: As you remove each subassembly from the computer, place the subassembly (and all accompanying screws) away from the work area to prevent damage.

Plastic parts

CAUTION: Using excessive force during disassembly and reassembly can damage plastic parts. Use care when handling the plastic parts. Apply pressure only at the points designated in the maintenance instructions.

Cables and connectors

⚠ **CAUTION:** When servicing the computer, be sure that cables are placed in their proper locations during the reassembly process. Improper cable placement can damage the computer.

Cables must be handled with extreme care to avoid damage. Apply only the tension required to unseat or seat the cables during removal and insertion. Handle cables by the connector whenever possible. In all cases, avoid bending, twisting, or tearing cables. Be sure that cables are routed in such a way that they cannot be caught or snagged by parts being removed or replaced. Handle flex cables with extreme care; these cables tear easily.

Drive handling

⚠ **CAUTION:** Drives are fragile components that must be handled with care. To prevent damage to the computer, damage to a drive, or loss of information, observe these precautions:

Before removing or inserting a hard drive, shut down the computer. If you are unsure whether the computer is off or in Hibernation, turn the computer on, and then shut it down through the operating system.

Before handling a drive, be sure that you are discharged of static electricity. While handling a drive, avoid touching the connector.

Before removing a diskette drive or optical drive, be sure that a diskette or disc is not in the drive and be sure that the optical drive tray is closed.

Handle drives on surfaces covered with at least one inch of shock-proof foam.

Avoid dropping drives from any height onto any surface.

After removing a hard drive, an optical drive, or a diskette drive, place it in a static-proof bag.

Avoid exposing a hard drive to products that have magnetic fields, such as monitors or speakers.

Avoid exposing a drive to temperature extremes or liquids.

If a drive must be mailed, place the drive in a bubble pack mailer or other suitable form of protective packaging and label the package “FRAGILE.”

Grounding guidelines

Electrostatic discharge damage

Electronic components are sensitive to electrostatic discharge (ESD). Circuitry design and structure determine the degree of sensitivity. Networks built into many integrated circuits provide some protection, but in many cases, ESD contains enough power to alter device parameters or melt silicon junctions.

A discharge of static electricity from a finger or other conductor can destroy static-sensitive devices or microcircuitry. Even if the spark is neither felt nor heard, damage may have occurred.

An electronic device exposed to ESD may not be affected at all and can work perfectly throughout a normal cycle. Or the device may function normally for a while, and then degrade in the internal layers, reducing its life expectancy.

⚠ **CAUTION:** To prevent damage to the computer when you are removing or installing internal components, observe these precautions:

Keep components in their electrostatic-safe containers until you are ready to install them.

Use nonmagnetic tools.

Before touching an electronic component, discharge static electricity by using the guidelines described in this section.

Avoid touching pins, leads, and circuitry. Handle electronic components as little as possible.

If you remove a component, place it in an electrostatic-safe container.

The following table shows how humidity affects the electrostatic voltage levels generated by different activities.

⚠ **CAUTION:** A product can be degraded by as little as 700 V.

Typical electrostatic voltage levels			
	Relative humidity		
Event	**10%**	**40%**	**55%**
Walking across carpet	35,000 V	15,000 V	7,500 V
Walking across vinyl floor	12,000 V	5,000 V	3,000 V
Motions of bench worker	6,000 V	800 V	400 V
Removing DIPS from plastic tube	2,000 V	700 V	400 V
Removing DIPS from vinyl tray	11,500 V	4,000 V	2,000 V
Removing DIPS from Styrofoam	14,500 V	5,000 V	3,500 V
Removing bubble pack from PCB	26,500 V	20,000 V	7,000 V
Packing PCBs in foam-lined box	21,000 V	11,000 V	5,000 V

Packaging and transporting guidelines

Follow these grounding guidelines when packaging and transporting equipment:

- To avoid hand contact, transport products in static-safe tubes, bags, or boxes.
- Protect ESD-sensitive parts and assemblies with conductive or approved containers or packaging.
- Keep ESD-sensitive parts in their containers until the parts arrive at static-free workstations.
- Place items on a grounded surface before removing items from their containers.
- Always be properly grounded when touching a component or assembly.
- Store reusable ESD-sensitive parts from assemblies in protective packaging or nonconductive foam.
- Use transporters and conveyors made of antistatic belts and roller bushings. Be sure that mechanized equipment used for moving materials is wired to ground and that proper materials are selected to avoid static charging. When grounding is not possible, use an ionizer to dissipate electric charges.

Workstation guidelines

Follow these grounding workstation guidelines:

- Cover the workstation with approved static-shielding material.
- Use a wrist strap connected to a properly grounded work surface and use properly grounded tools and equipment.
- Use conductive field service tools, such as cutters, screwdrivers, and vacuums.
- When fixtures must directly contact dissipative surfaces, use fixtures made only of static-safe materials.
- Keep the work area free of nonconductive materials, such as ordinary plastic assembly aids and Styrofoam.
- Handle ESD-sensitive components, parts, and assemblies by the case or PCM laminate. Handle these items only at static-free workstations.
- Avoid contact with pins, leads, or circuitry.
- Turn off power and input signals before inserting or removing connectors or test equipment.

Equipment guidelines

Grounding equipment must include either a wrist strap or a foot strap at a grounded workstation.

- When seated, wear a wrist strap connected to a grounded system. Wrist straps are flexible straps with a minimum of one megohm ±10% resistance in the ground cords. To provide proper ground, wear a strap snugly against the skin at all times. On grounded mats with banana-plug connectors, use alligator clips to connect a wrist strap.
- When standing, use foot straps and a grounded floor mat. Foot straps (heel, toe, or boot straps) can be used at standing workstations and are compatible with most types of shoes or boots. On conductive floors or dissipative floor mats, use foot straps on both feet with a minimum of one megohm resistance between the operator and ground. To be effective, the conductive strips must be worn in contact with the skin.

The following grounding equipment is recommended to prevent electrostatic damage:

- Antistatic tapes
- Antistatic smocks, aprons, and sleeve protectors
- Conductive bins and other assembly or soldering aids
- Nonconductive foam
- Conductive tabletop workstations with ground cords of one megohm resistance
- Static-dissipative tables or floor mats with hard ties to the ground
- Field service kits
- Static awareness labels
- Material-handling packages
- Nonconductive plastic bags, tubes, or boxes
- Metal tote boxes
- Electrostatic voltage levels and protective materials

The following table lists the shielding protection provided by antistatic bags and floor mats.

Material	Use	Voltage protection level
Antistatic plastic	Bags	1,500 V
Carbon-loaded plastic	Floor mats	7,500 V
Metallized laminate	Floor mats	5,000 V

5 Removal and replacement procedures for Customer Self-Repair parts

CAUTION: The Customer Self-Repair program is not available in all locations. Installing a part not supported by the Customer Self-Repair program may void your warranty. Check your warranty to determine if Customer Self-Repair is supported in your location.

NOTE: HP continually improves and changes product parts. For complete and current information on supported parts for your computer, go to http://partsurfer.hp.com, select your country or region, and then follow the on-screen instructions.

Component replacement procedures

NOTE: Please read and follow the procedures described here to access and replace Customer Self-Repair parts successfully.

NOTE: Details about your computer, including model, serial number, product key, and length of warranty, are on the service tag at the bottom of your computer. See Labels on page 15 for details.

This chapter provides removal and replacement procedures for Customer Self-Repair parts.

There are as many as 14 screws that must be removed, replaced, or loosened when servicing Customer Self-Repair parts. Make special note of each screw size and location during removal and replacement.

Battery Safe mode

Before removing internal components, you must place the computer in “Battery Safe mode.” This mode avoids short-circuits or system malfunction by removing power from internal components.

To place the computer in “Battery Safe mode,” follow these steps:

1. With the computer turned off and AC adapter connected, press the following key and button combination: **Windows key + Backspace key + Power button**.
2. Turn the computer on to initiate “Battery Safe mode.”
3. After the computer powers off, disconnect the AC adapter.

In “Battery Safe mode,” the power button will not turn the computer on if the AC adapter is not connected.

To disengage “Battery Safe mode,” plug in the AC adapter and press the power button.

Service doors

Description	Spare part number
Main service door (included in Plastics Kit)	905703-001
Hard drive service door (included in Hard Drive Hardware Kit)	905708-001

The bottom of the computer has two service doors. The hard drive service door only provides access to the hard drive. The main service door provides access to the memory modules, wireless modules, M.2 solid-state drive, and keyboard screws.

Before removing the service doors, follow these steps:

1. Shut down the computer. If you are unsure whether the computer is off or in Hibernation, turn the computer on, and then shut it down through the operating system.
2. Place the computer in “Battery Safe mode” (Battery Safe mode on page 31).
3. Disconnect all external devices connected to the computer.
4. Disconnect the power from the computer by first unplugging the power cord from the AC outlet, and then unplugging the AC adapter from the computer.

Remove the service doors:

1. **Main service door**

   Loosen the captive Phillips screw **(1)**.

2. Lift the bottom of the door upward **(2)**, and then remove the door from the computer **(3)**.

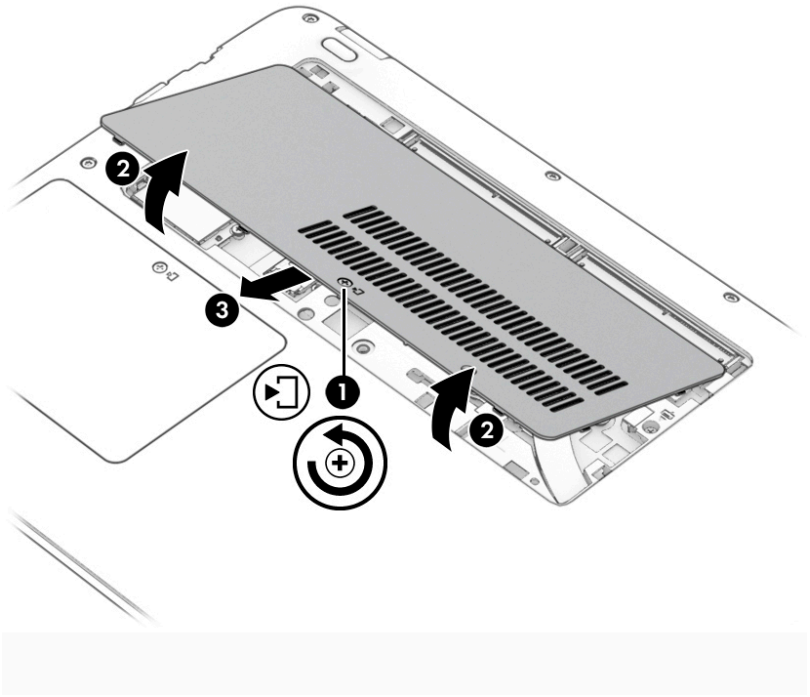

3. **Hard drive service door**

   Loosen the captive Phillips screw **(1)**.

4. Lift the bottom of the door upward **(2)**, and then remove the door from the computer **(3)**.

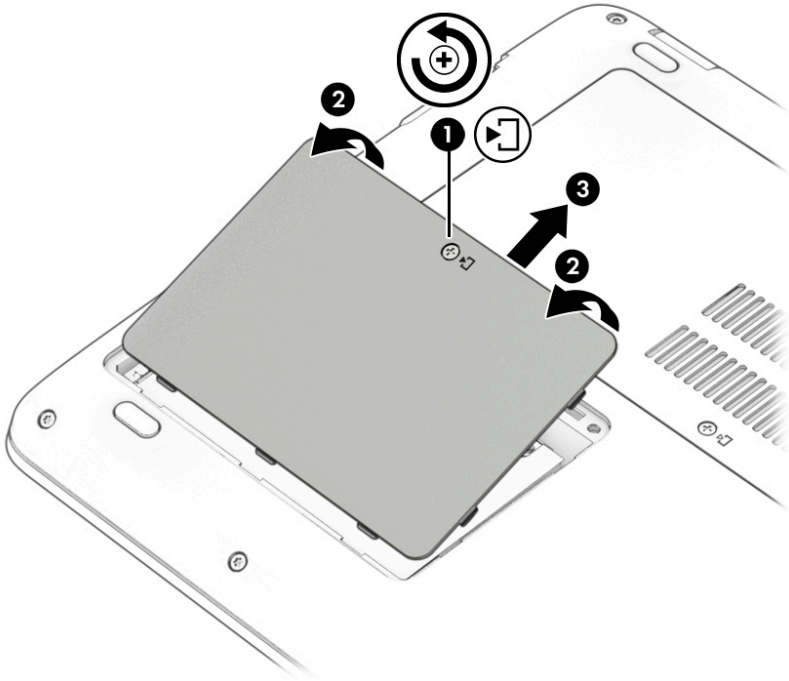

Reverse these procedures to install the service doors.

Hard drive

Description	Spare part number
Hard drives	
1 TB, 5400 rpm, 7 mm	832077-001
500 GB, 5400 rpm, 7 mm	778186-001
500 GB, 5400 rpm, 7 mm, hybrid (8-GB SSD)	732000-001
500 GB, 7200 rpm, 7 mm	778189-001
Hard drive cover	905708-001
NOTE: The hard drive cover is included in the Hard Drive Hardware Kit.	

Before removing the hard drive, follow these steps:

1. Shut down the computer. If you are unsure whether the computer is off or in Hibernation, turn the computer on, and then shut it down through the operating system.
2. Place the computer in “Battery Safe mode” (Battery Safe mode on page 31).
3. Disconnect all external devices connected to the computer.
4. Disconnect the power from the computer by first unplugging the power cord from the AC outlet, and then unplugging the AC adapter from the computer.
5. Remove the hard drive service door (see Service doors on page 32).

Remove the hard drive:

1. Remove the 2 Phillips PM2.0×3.0 screws **(1)** that secure the hard drive to the computer.
2. Pull the plastic tab to slide the hard drive **(2)** away from the bottom of the computer to disengage it from the connector **(3)**.

3. Lift the hard drive from the bay **(4)**.

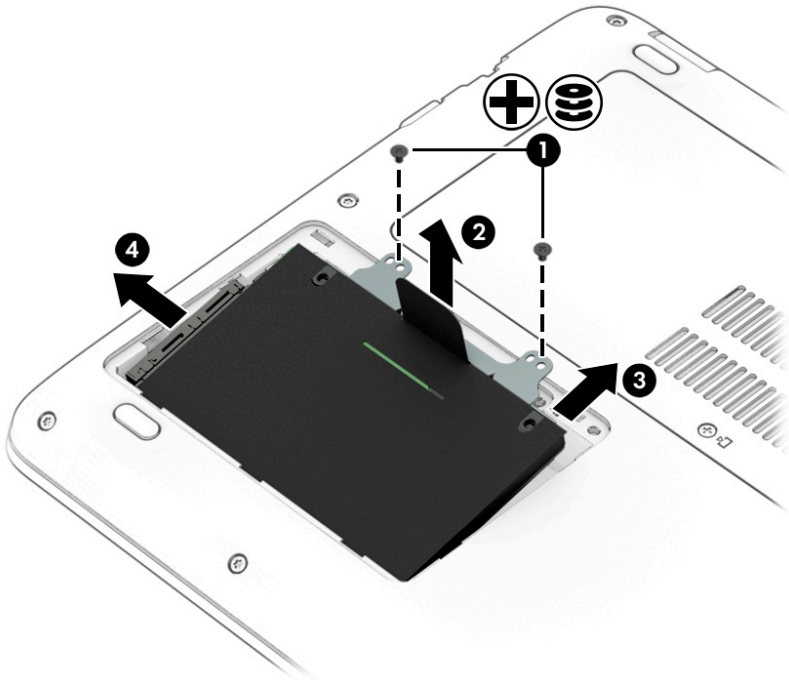

4. To remove the hard drive cover from the hard drive, remove the 4 Phillips PM3.0×3.0 screws **(1)** that secure the bracket to the drive, and then lift the cover off the drive **(2)**.

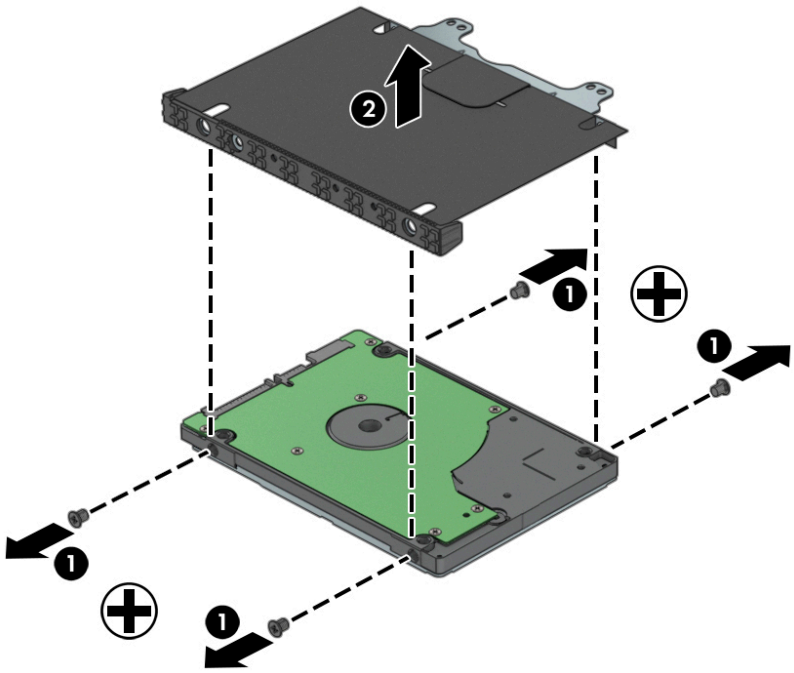

Reverse these procedures to install a hard drive.

Memory modules

Description	Spare part number
4-GB (PC4-17000)	820569-001
8-GB (PC4-17000)	820570-001

Update BIOS before adding memory modules

Before adding new memory, make sure you update the computer to the latest BIOS.

⚠ **CAUTION:** Failure to update the computer to the latest BIOS prior to installing new memory may result in various system problems.

To update BIOS:

1. Navigate to www.hp.com.
2. Click **Support & Drivers >** click **Drivers & Software**.
3. In the **Enter a product name/number** box, type the computer model information, and then click **Search**.
4. Click the link for the computer model.
5. Select the operating system, and then click **Next**.
6. Under **Step 2: Select a Download**, click the **BIOS** link.
7. Click the link for the most recent BIOS.
8. Click the **Download** button, and then follow the on-screen instructions.

Before removing the memory module, follow these steps:

1. Shut down the computer. If you are unsure whether the computer is off or in Hibernation, turn the computer on, and then shut it down through the operating system.
2. Place the computer in “Battery Safe mode” (Battery Safe mode on page 31).
3. Disconnect all external devices connected to the computer.
4. Disconnect the power from the computer by first unplugging the power cord from the AC outlet, and then unplugging the AC adapter from the computer.
5. Remove the main service door (see Service doors on page 32).

Remove the memory module:

1. Spread the retaining tabs **(1)** on each side of the memory module slot to release the memory module. (The edge of the module opposite the slot rises away from the computer.)

2. Remove the memory module **(2)** by pulling the module away from the slot at an angle.

NOTE: Memory modules are designed with a notch to prevent incorrect insertion into the memory module slot.

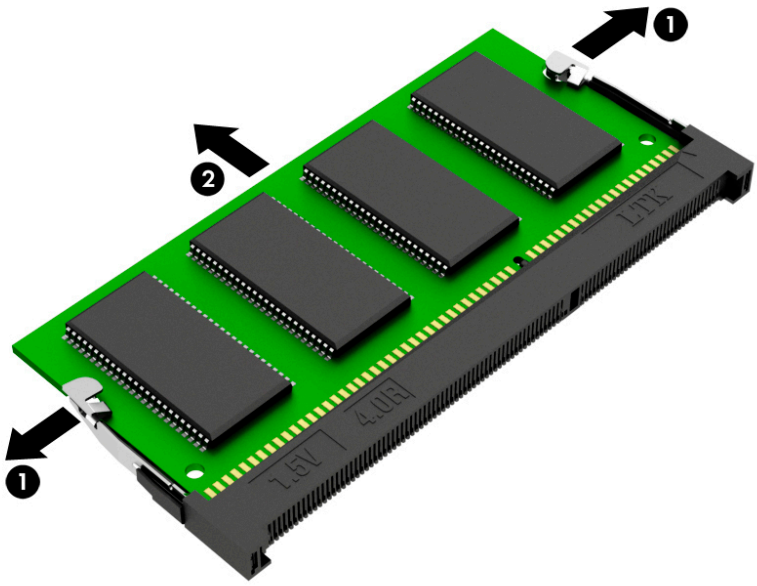

Reverse this procedure to install a memory module.

WLAN/Bluetooth combo card

The computer uses a card that provides both WLAN and Bluetooth functionality.

Description	Spare part number
Realtek RTL8723BE-VB 802.11b/g/n 1x1 Wi-Fi + Bluetooth 4.0 combination adapter	843338-001
Intel Dual Band Wireless-AC 3168 802.11ac, 1×1 Wi-Fi + Bluetooth 4.0 combination adapter	852511-001
Intel Dual Band Wireless-AC 8265, 802.11ac, 2×2 Wi-Fi + Bluetooth 4.2 combination adapter	851594-001
Intel Dual Band Wireless-AC 7265NV (non v-Pro) 802.11ac 2×2 WiFi + Bluetooth 4.2 combination adapter	860883-001

Before removing the WLAN module, follow these steps:

1. Shut down the computer. If you are unsure whether the computer is off or in Hibernation, turn the computer on, and then shut it down through the operating system.
2. Place the computer in “Battery Safe mode” (Battery Safe mode on page 31).
3. Disconnect all external devices connected to the computer.
4. Disconnect the power from the computer by first unplugging the power cord from the AC outlet, and then unplugging the AC adapter from the computer.
5. Remove the main service door (see Service doors on page 32).

Remove the WLAN module:

1. Disconnect the WLAN antenna cables **(1)** from the terminals on the WLAN module.

NOTE: The WLAN antenna cable labeled “1” connects to the WLAN module “Main” terminal labeled “1”. The WLAN antenna cable labeled “2” connects to the WLAN module “Aux” terminal labeled “2”. If the computer is equipped with an 802.11a/b/g/n WLAN module, the yellow WLAN antenna cable connects to the middle terminal on the WLAN module.

2. Remove the Phillips PM2.0×4.0 screw **(2)** that secures the WLAN module to the computer. (The edge of the module opposite the slot rises away from the computer.)

3. Remove the WLAN module **(3)** by pulling the module away from the slot at an angle.

NOTE: WLAN modules are designed with a notch to prevent incorrect insertion.

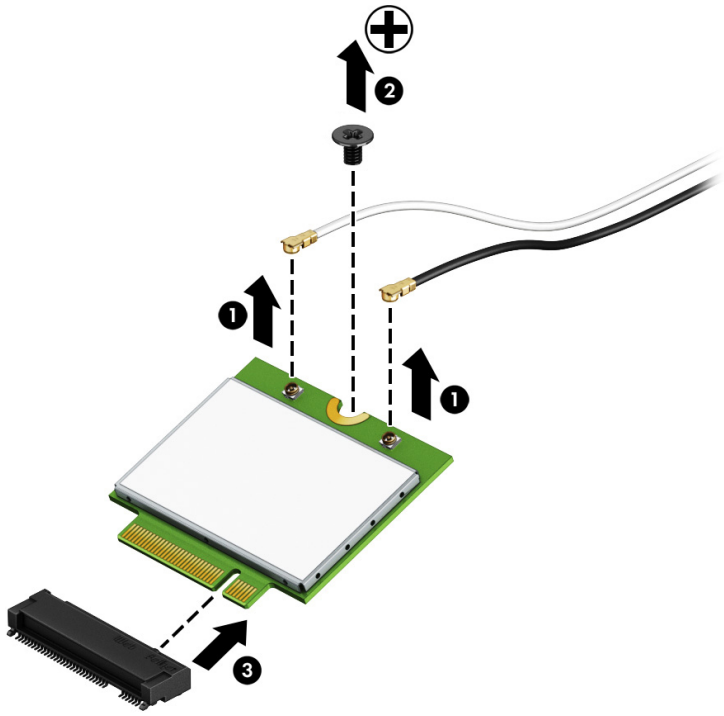

NOTE: If the WLAN antennas are not connected to the terminals on the WLAN module, the protective sleeves must be installed on the antenna connectors, as shown in the following illustration.

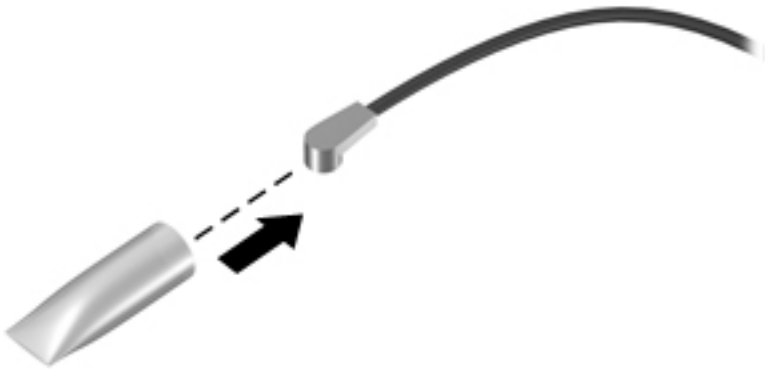

Reverse this procedure to install the WLAN module.

WWAN module

NOTE: The WWAN module and the WLAN module are not interchangeable.

Description	Spare part number
Huawei HP lt4132, LTE/HSPA+ w/GPS M.2	845710-001

Before removing the WWAN module, follow these steps:

1. Shut down the computer. If you are unsure whether the computer is off or in Hibernation, turn the computer on, and then shut it down through the operating system.
2. Place the computer in “Battery Safe mode” (Battery Safe mode on page 31).
3. Disconnect all external devices connected to the computer.
4. Disconnect the power from the computer by first unplugging the power cord from the AC outlet, and then unplugging the AC adapter from the computer.
5. Remove the service door (see Service doors on page 32).

Remove the WWAN module:

1. Disconnect the WWAN antenna cables **(1)** from the terminals on the WWAN module.

NOTE: The red WWAN antenna cable is connected to the WWAN module “Main” terminal. The blue WWAN antenna cable is connected to the WWAN module “Aux” terminal.

2. Remove the Phillips PM2.0×3.0 screw **(2)** that secures the WWAN module to the system board.

3. Remove the WWAN module **(3)** by pulling the module away from the slot.

NOTE: WWAN modules are designed with a notch to prevent incorrect insertion.

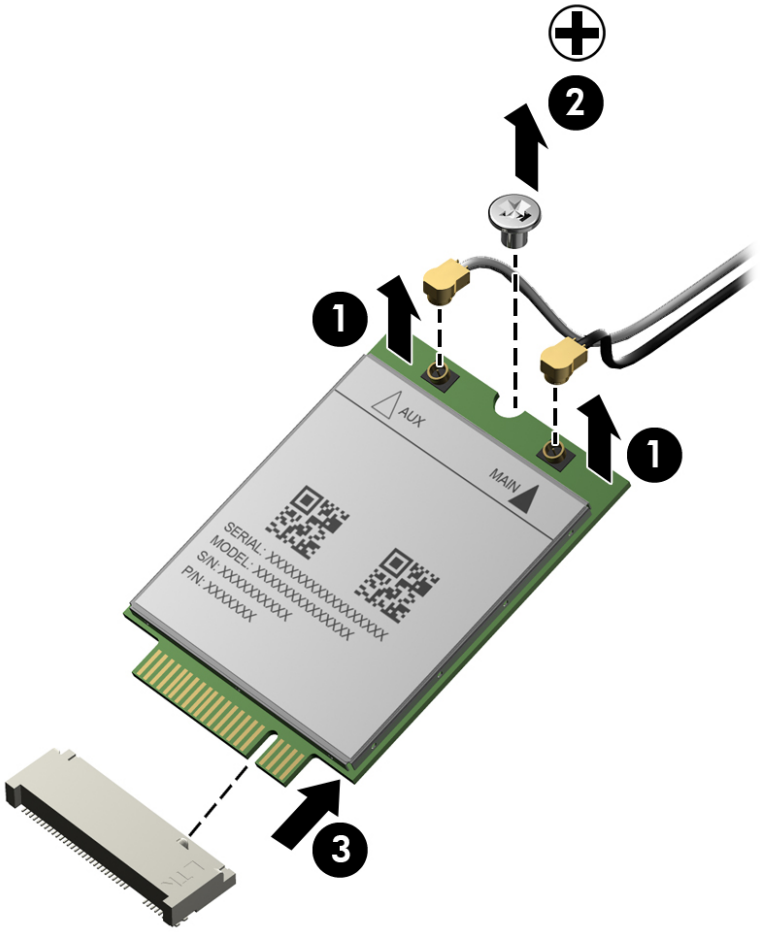

NOTE: If the WWAN antennas are not connected to the terminals on the WWAN module, the protective sleeves must be installed on the antenna connectors, as shown in the following illustration.

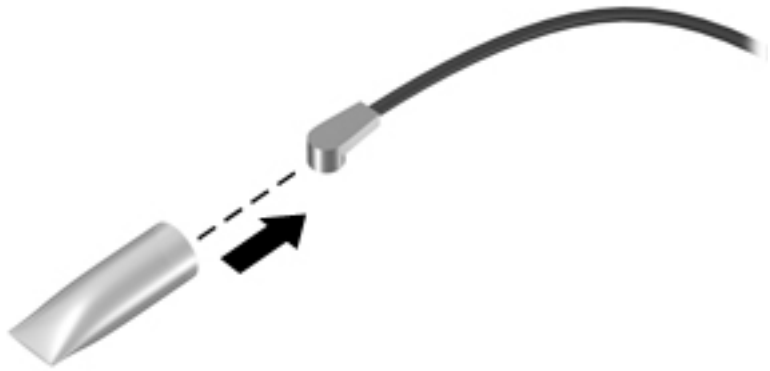

Reverse this procedure to install the WWAN module.

M.2 solid-state drive

Description	Spare part number
256-GB	906972-001
128-GB	906971-001

Before removing the solid-state drive, follow these steps:

1. Shut down the computer. If you are unsure whether the computer is off or in Hibernation, turn the computer on, and then shut it down through the operating system.
2. Place the computer in “Battery Safe mode” (Battery Safe mode on page 31).
3. Disconnect all external devices connected to the computer.
4. Disconnect the power from the computer by first unplugging the power cord from the AC outlet, and then unplugging the AC adapter from the computer.
5. Remove the service door (see Service doors on page 32).

Remove the solid-state drive:

1. Remove the Phillips PM2.0×4.0 screw **(1)** that secures the solid-state drive to the computer. (The edge of the module opposite the slot rises away from the computer.)
2. Remove the solid-state drive **(2)** by pulling the module away from the slot at an angle.

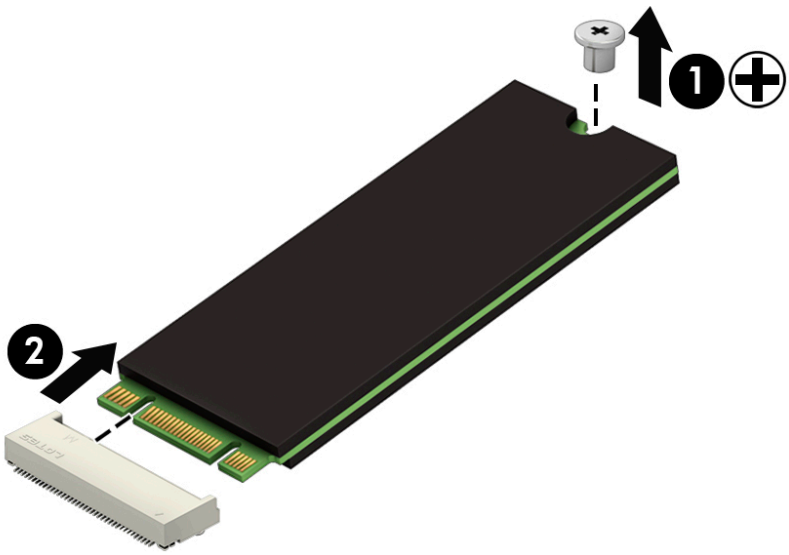

Reverse this procedure to install the solid-state drive.

Keyboard

In this section, the first table provides the main spare part number for the keyboards. The second table provides the country codes.

Description	Spare part number
Keyboard, no backlight	906764-xxx
Keyboard, backlit	906763-xxx

For use in country or region	Spare part number	For use in country or region	Spare part number	For use in country or region	Spare part number
Belgium	-A41	India	-D61	Slovenia	-BA1
Bulgaria	-261	Israel	-BB1	South Korea	-AD1
Canada	-DB1	Italy	-061	Spain	-071
Czech Republic and Slovakia	-FL1	Japan	-291	Switzerland	-BG1
Denmark, Finland, and Norway	-DH1	The Netherlands	-B31	Taiwan	-AB1
France	-051	Northern Africa	-FP1	Thailand	-281
Germany	-041	Portugal	-131	Turkey	-141
Greece	-151	Russia	-251	United Kingdom	-031
Hungary	-211	Saudi Arabia	-171	United States	-001
Iceland	-DD1				

Before removing the keyboard, follow these steps:

1. Shut down the computer. If you are unsure whether the computer is off or in Hibernation, turn the computer on, and then shut it down through the operating system.
2. Place the computer in “Battery Safe mode” (Battery Safe mode on page 31).
3. Disconnect all external devices connected to the computer.
4. Disconnect the power from the computer by first unplugging the power cord from the AC outlet, and then unplugging the AC adapter from the computer.
5. Remove the main service door (see Service doors on page 32).

Remove the keyboard:

1. Remove the 2 Phillips PM2.5×5.0 screws that secure the keyboard to the computer **(1)**.

2. Insert a tool into the access hole in the bottom of the computer (next to the hard drive bay) and push to disengage the keyboard from the top cover **(2)**.

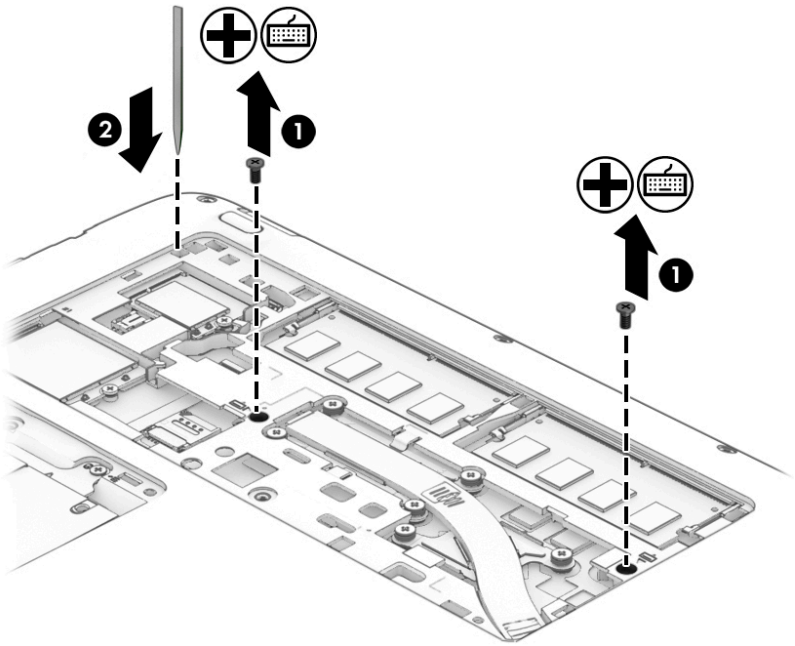

3. Lift the top of the keyboard upward **(1)**, and then rotate the keyboard until it rests on the palm rest **(2)**.

NOTE: A cable (or cables) connect the bottom of the keyboard to the system board. Make sure not to prematurely pull the cables out of the system board connector.

4. Disconnect the keyboard cable by lifting the connector latch **(1)**, and then disconnect the keyboard cable from the system board **(2)**.

5. If applicable, disconnect the backlight cable by lifting the connector latch **(3)**, and then disconnect the cable from the system board **(4)**.
6. Remove the keyboard **(5)**.

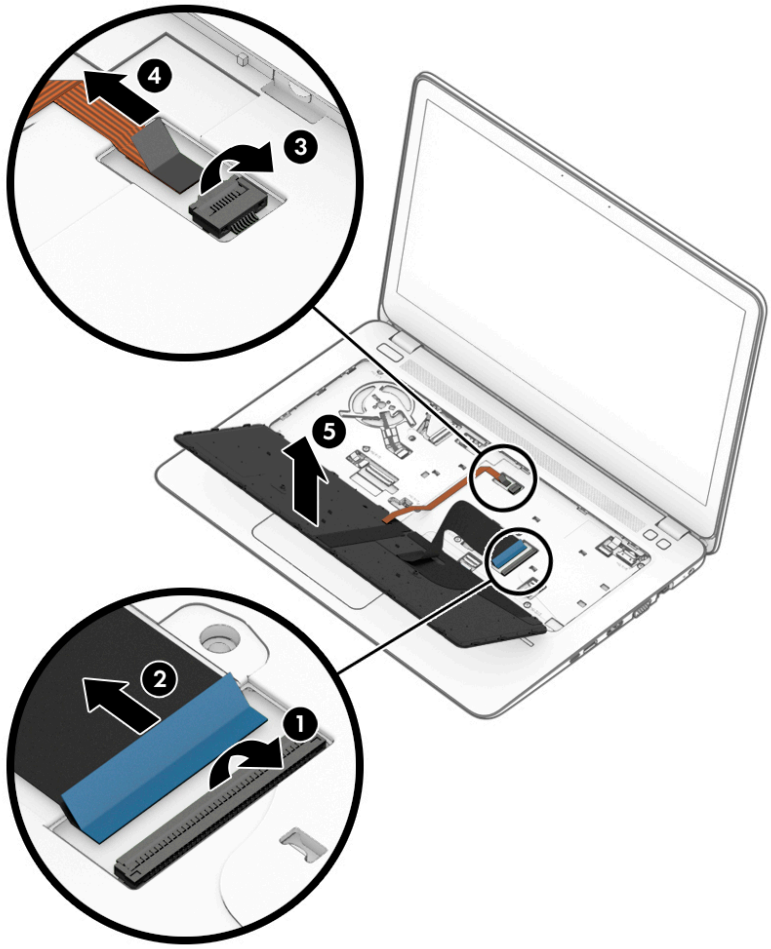

Reverse this procedure to install the keyboard.

6 Removal and replacement procedures for Authorized Service Provider parts

CAUTION: Components described in this chapter should only be accessed by an authorized service provider. Accessing these parts can damage the computer or void the warranty.

NOTE: HP continually improves and changes product parts. For complete and current information on supported parts for your computer, go to http://partsurfer.hp.com, select your country or region, and then follow the on-screen instructions.

Component replacement procedures

NOTE: Details about your computer, including model, serial number, product key, and length of warranty, are on the service tag at the bottom of your computer. See Labels on page 15 for details.

This chapter provides removal and replacement procedures for Authorized Service Provider only parts.

There are as many as 57 screws that must be removed, replaced, or loosened when servicing Authorized Service Provider only parts. Make special note of each screw size and location during removal and replacement.

Display subcomponents (bezel, webcam, panel)

This section describes removing display subcomponents that do not require that you remove the entire display assembly from the computer. You can remove the display bezel, webcam/microphone module, and display panel while the display assembly is still attached to the computer.

To remove the remaining display subcomponents, you must remove the entire display assembly from the computer. See Display assembly on page 75 for more information about removing the display assembly in its entirety.

Description	Spare part number
Raw display panel	
FHD	809002-002
HD	839668-002
Display bezel	
Models without a webcam	905693-001
Models with a webcam	905692-001
Webcam/microphone module	805139-009

Before removing display subcomponents while the display assembly is still attached to the computer, follow these steps:

1. Shut down the computer. If you are unsure whether the computer is off or in Hibernation, turn the computer on, and then shut it down through the operating system.
2. Place the computer in “Battery Safe mode” (Battery Safe mode on page 31).
3. Disconnect all external devices connected to the computer.
4. Disconnect the power from the computer by first unplugging the power cord from the AC outlet and then unplugging the AC adapter from the computer.

Remove the display bezel, webcam/microphone module, and raw display panel:

1. Position the computer upright with the front toward you, and then open it.
2. Flex the inside of the top edge **(1)**, left and right sides **(2)**, and the inside of the bottom edge **(3)** of the display bezel until the bezel disengages from the display enclosure.
3. Remove the display bezel **(4)**.

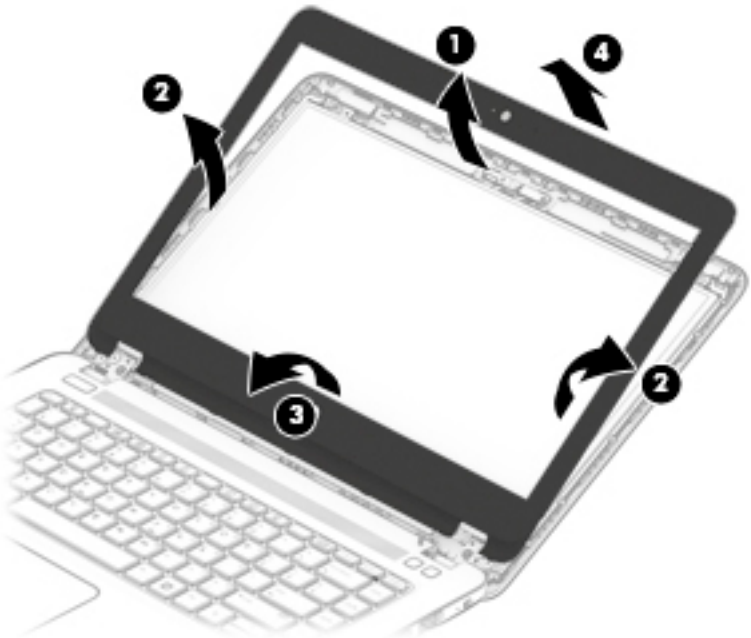

4. To remove the webcam/microphone module:
   a. Position the display assembly with the top edge toward you.
   b. Lift to disengage the adhesive that secures the webcam/microphone module to the display **(1)**.

c. Disconnect the cable **(2)** from the module.

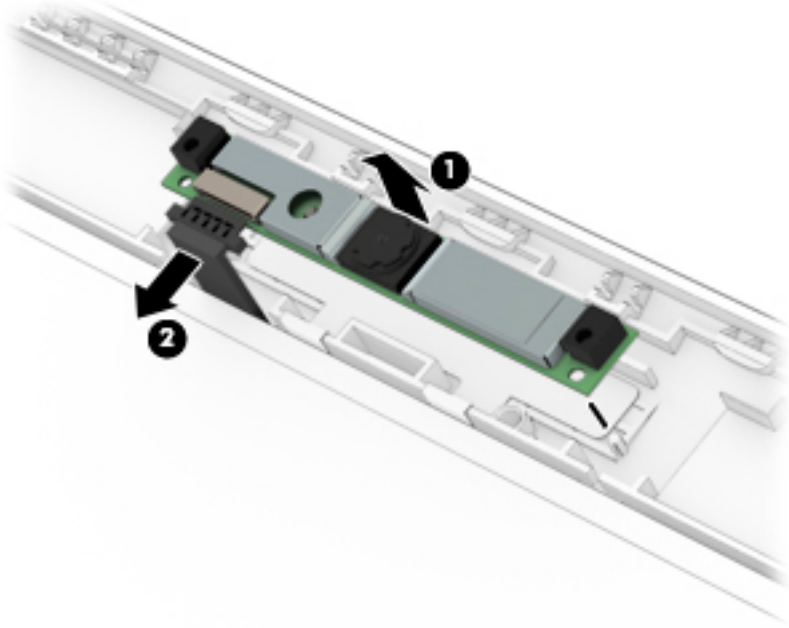

5. To remove the display panel:

   a. Remove the 4 Phillips PM2.0×3.0 screws **(1)** that secure the display panel to the enclosure.

   b. Rotate the display panel onto the keyboard **(2)** to gain access to the display cable connection on the back of the panel.

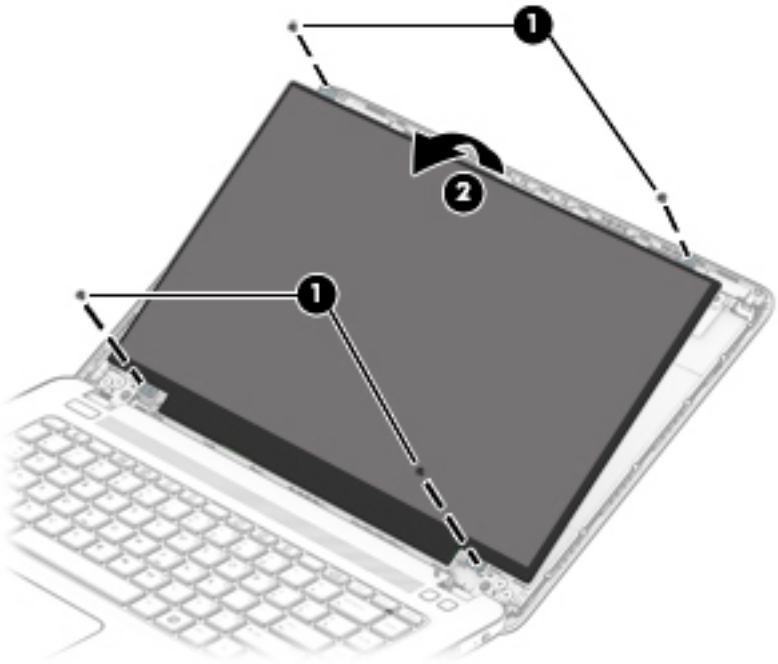

   c. On the back of the display panel, release the adhesive strip that secures the display panel cable to the display panel **(1)**, and then disconnect the cable **(2)**.

d. Remove the display panel from the computer **(3)**.

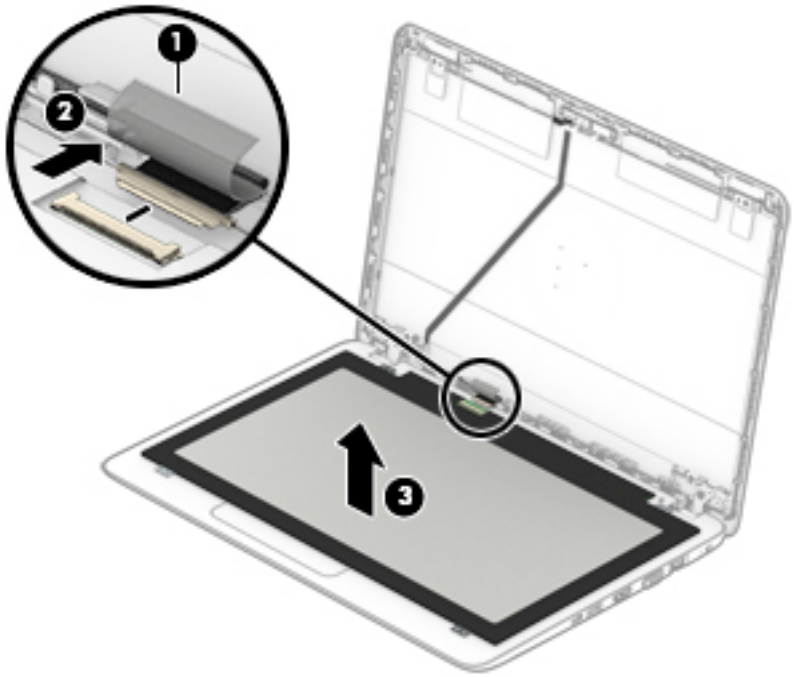

Reverse this procedure to reassemble and install the display bezel, webcam/microphone module, and display panel.

Top cover

NOTE: Top cover spare part kits include the touchpad assembly.

Description	Spare part number
Top cover (includes touchpad)	905702-001

Before removing the top cover, follow these steps:

1. Shut down the computer. If you are unsure whether the computer is off or in Hibernation, turn the computer on, and then shut it down through the operating system.
2. Place the computer in “Battery Safe mode” (Battery Safe mode on page 31).
3. Disconnect all external devices connected to the computer.
4. Disconnect the power from the computer by first unplugging the power cord from the AC outlet, and then unplugging the AC adapter from the computer.
5. Remove the following components:
   a. Service door (see Service doors on page 32).
   b. Hard drive (Hard drive on page 34)
   c. Keyboard (see Keyboard on page 43)

Remove the top cover:

1. Position the computer upside-down with the front toward you.
2. Remove the 10 Torx T8 2.5×7.0 screws **(1)** that secure the top cover to the computer.
3. Remove the 2 Phillips PM2.0×1.8 screws **(2)** that secure the top cover to the computer.

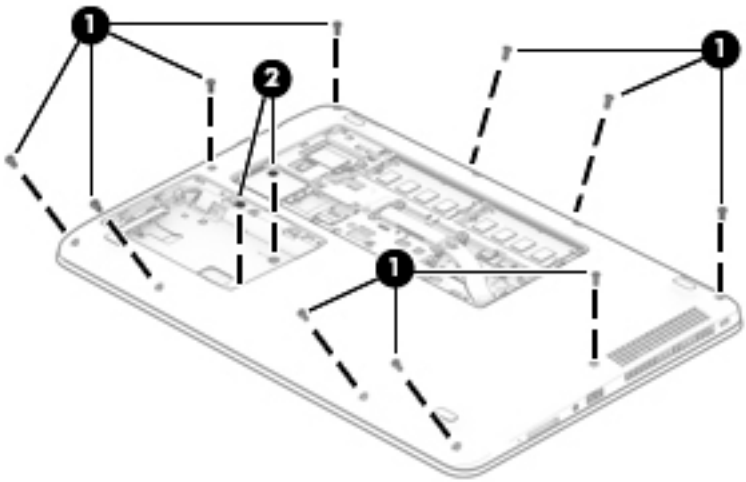

4. Position the computer upright and open it as far as possible.

5. Remove the 6 Torx T8 2.5×4.0 screws that secure the top cover to the computer.

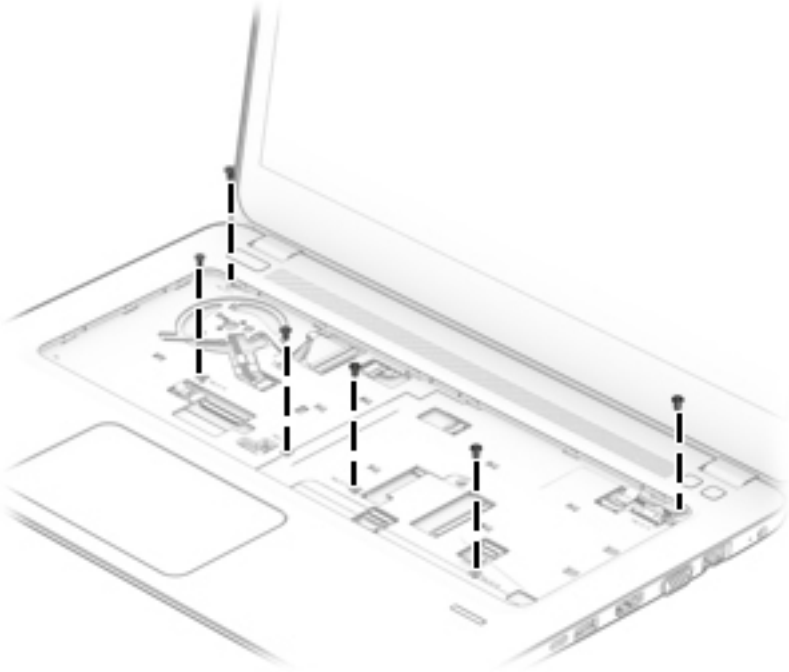

6. Disconnect the following cables from the system board:

(1) Speaker cable

(2) Function board cable

(3) Power button board cable

(4) Touchpad board cable

(5) Fingerprint reader cable

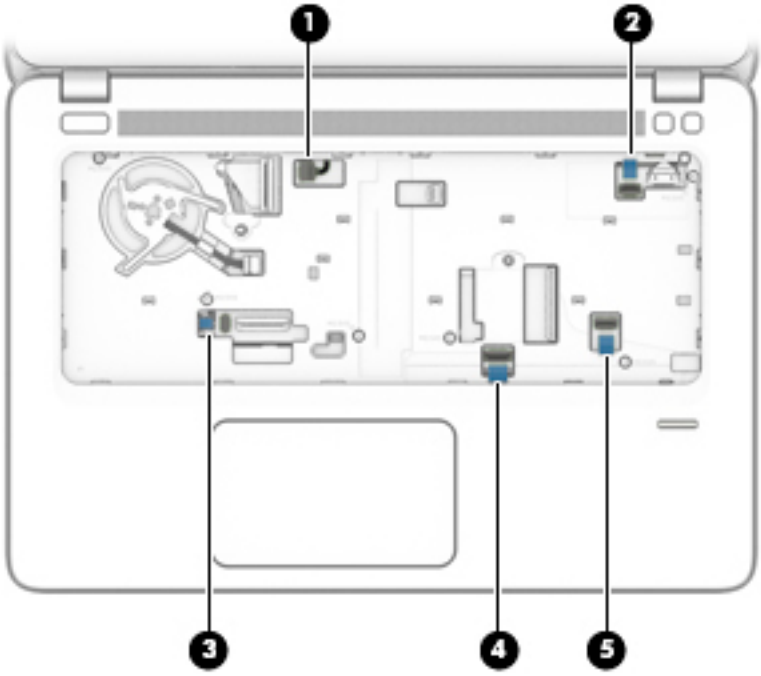

7. Rotate the bottom of the top cover upward **(1)**, and then lift the top cover off the computer **(2)**.

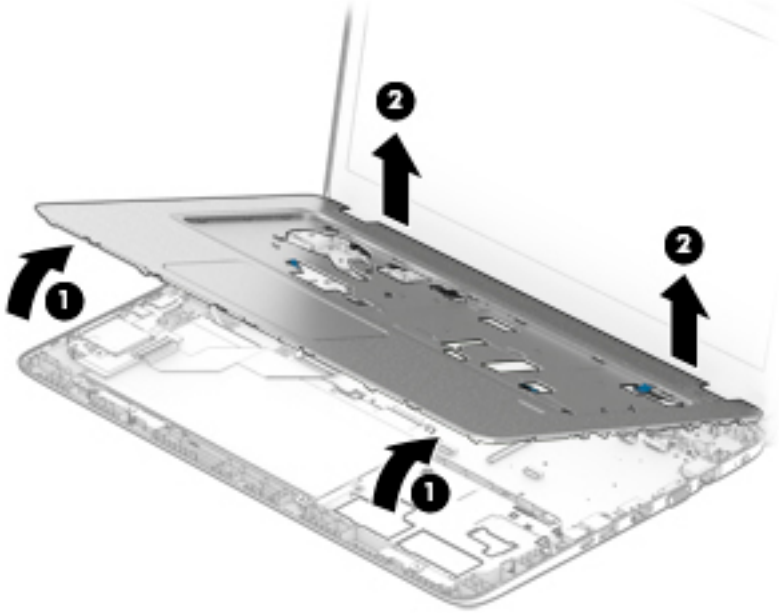

Reverse this procedure to install the top cover.

Fingerprint reader assembly

Description	Spare part number
Fingerprint reader assembly (includes cable)	905704-001
Fingerprint reader bracket (included in Plastics Kit)	905703-001
Fingerprint reader insert (included in Plastics Kit; for use in models without a fingerprint reader)	905703-001

Before removing the fingerprint reader assembly, follow these steps:

1. Shut down the computer. If you are unsure whether the computer is off or in Hibernation, turn the computer on, and then shut it down through the operating system.
2. Place the computer in “Battery Safe mode” (Battery Safe mode on page 31).
3. Disconnect all external devices connected to the computer.
4. Disconnect the power from the computer by first unplugging the power cord from the AC outlet, and then unplugging the AC adapter from the computer.
5. Remove the following components:
   a. Service door (see Service doors on page 32).
   b. Hard drive (Hard drive on page 34)
   c. Keyboard (see Keyboard on page 43)
   d. Top cover (see Top cover on page 50)

Remove the fingerprint reader assembly:

1. Position the top cover upside-down.
2. Slide the bracket toward the side of the top cover, and then lift it off the fingerprint reader board **(1)**.

3. Lift the fingerprint reader cable to disengage the adhesive that secures it to the top cover **(2)**, and then remove the board and cable assembly from the top cover **(3)**.

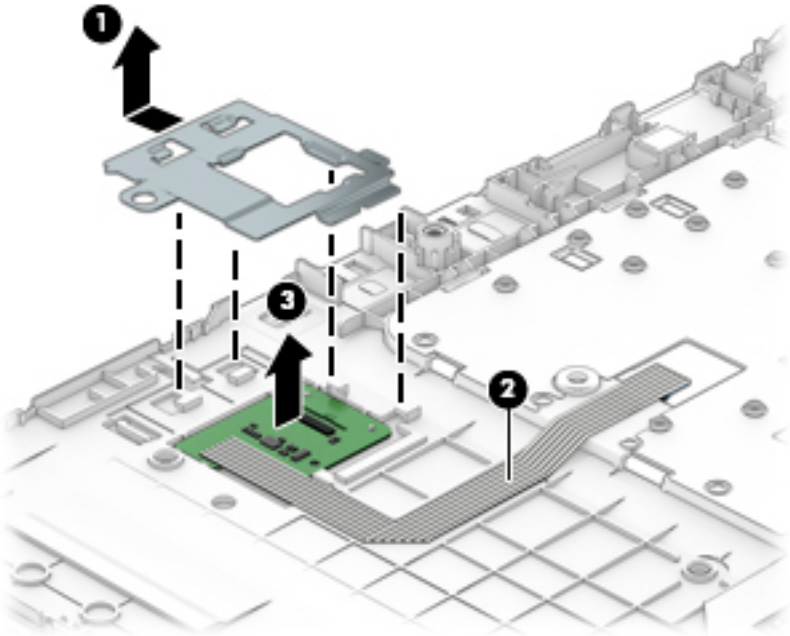

Reverse this procedure to install the fingerprint reader assembly.

Power button board

Description	Spare part number
Power button board assembly	905712-001
Power button board cable (included in Cable Kit)	905707-001

Before removing the power button board, follow these steps:

1. Shut down the computer. If you are unsure whether the computer is off or in Hibernation, turn the computer on, and then shut it down through the operating system.
2. Place the computer in “Battery Safe mode” (Battery Safe mode on page 31).
3. Disconnect all external devices connected to the computer.
4. Disconnect the power from the computer by first unplugging the power cord from the AC outlet, and then unplugging the AC adapter from the computer.
5. Remove the following components:
   a. Service door (see Service doors on page 32)
   b. Hard drive (Hard drive on page 34)
   c. Keyboard (see Keyboard on page 43)
   d. Top cover (see Top cover on page 50)

Remove the power button board:

1. Position the top cover upside-down.
2. Disconnect the cable from the connector on the board **(1)**.
3. Remove the Phillips PM2.0×3.0 screw **(2)** that secures the board to the top cover.
4. Lift the left side of the board **(3)**, and then pull the board out and to the left to remove it from under the tabs **(4)**.

5. If you need to replace the cable, note the cable routing path inside of the top cover **(5)**.

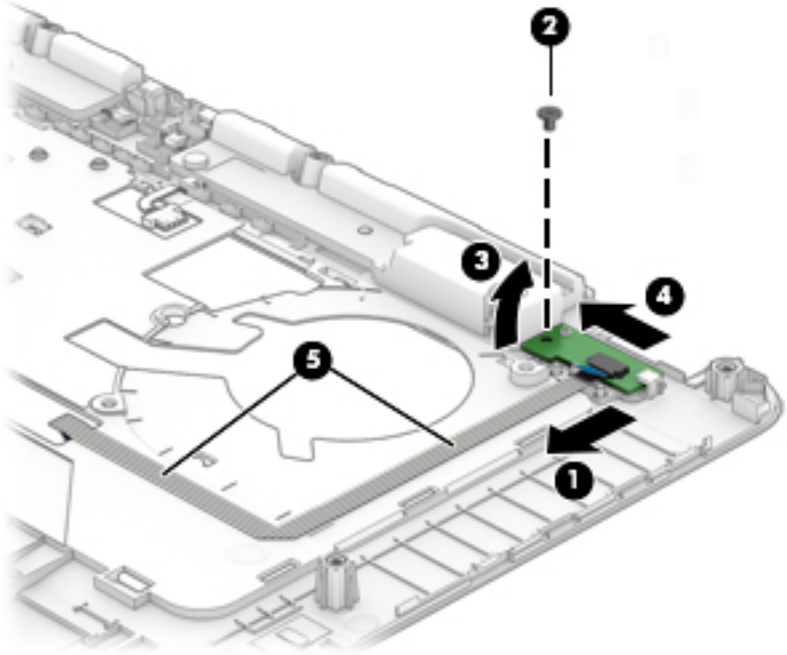

Reverse this procedure to install the power button board.

Function board

Description	Spare part number
Function board	905710-001
Function board cable (included in Cable Kit)	905707-001

Before removing the function board, follow these steps:

1. Shut down the computer. If you are unsure whether the computer is off or in Hibernation, turn the computer on, and then shut it down through the operating system.
2. Place the computer in “Battery Safe mode” (Battery Safe mode on page 31).
3. Disconnect all external devices connected to the computer.
4. Disconnect the power from the computer by first unplugging the power cord from the AC outlet, and then unplugging the AC adapter from the computer.
5. Remove the following components:
   a. Service door (see Service doors on page 32)
   b. Hard drive (Hard drive on page 34)
   c. Keyboard (see Keyboard on page 43)
   d. Top cover (see Top cover on page 50)

Remove the function board:

1. Position the top cover upside-down.
2. Disconnect the cable from the connector on the function board **(1)**.
3. Remove the Phillips PM2.0×3.0 screw **(2)** that secures the board to the top cover.

4. Lift the right side of the board **(3)**, and then slide the board to the right to remove it from the top cover **(4)**.

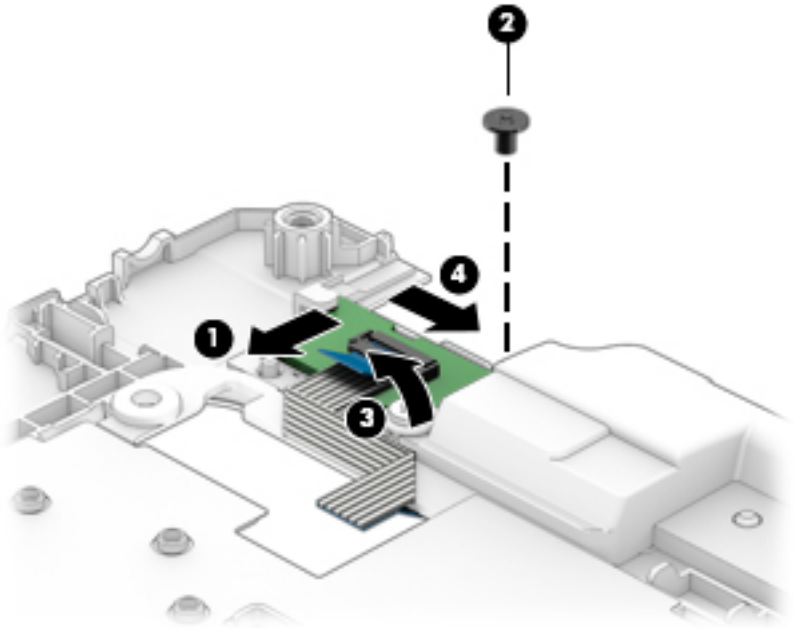

Reverse this procedure to install the function board.

Speaker assembly

Description	Spare part number
Speaker assembly	905705-001

Before removing the speaker assembly, follow these steps:

1. Shut down the computer. If you are unsure whether the computer is off or in Hibernation, turn the computer on, and then shut it down through the operating system.
2. Place the computer in “Battery Safe mode” (Battery Safe mode on page 31).
3. Disconnect all external devices connected to the computer.
4. Disconnect the power from the computer by first unplugging the power cord from the AC outlet, and then unplugging the AC adapter from the computer.
5. Remove the following components:
   a. Service door (see Service doors on page 32).
   b. Hard drive (Hard drive on page 34)
   c. Keyboard (see Keyboard on page 43)
   d. Top cover (see Top cover on page 50)

Remove the speaker assembly:

1. Position the top cover upside-down.
2. Remove the 2 Phillips PM2.0×3.0 screws **(1)** that secure the speaker assembly to the top cover.
3. Remove the cable from the clips in the top cover **(2)**.
4. Remove the speakers from the top cover **(3)**.

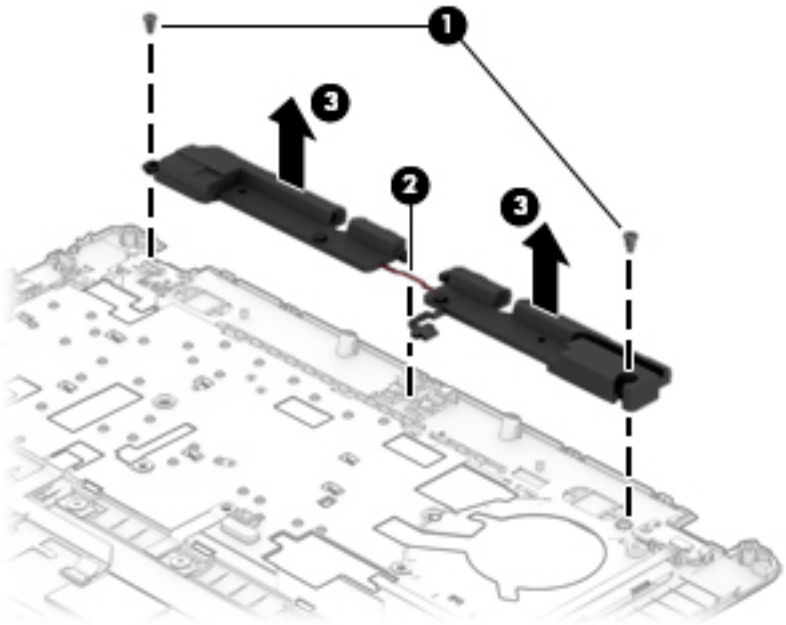

Reverse this procedure to install the speaker assembly.

TouchPad assembly

Description	Spare part number
TouchPad assembly **NOTE:** The TouchPad is included in the Top Cover spare part kit.	not spared
TouchPad assembly cable (included in Cable Kit)	905707-001

Before removing the TouchPad assembly, follow these steps:

1. Shut down the computer. If you are unsure whether the computer is off or in Hibernation, turn the computer on, and then shut it down through the operating system.
2. Place the computer in “Battery Safe mode” (Battery Safe mode on page 31).
3. Disconnect all external devices connected to the computer.
4. Disconnect the power from the computer by first unplugging the power cord from the AC outlet, and then unplugging the AC adapter from the computer.
5. Remove the following components:
   a. Service door (see Service doors on page 32).
   b. Hard drive (Hard drive on page 34)
   c. Keyboard (see Keyboard on page 43)
   d. Top cover (see Top cover on page 50)

Remove the TouchPad assembly:

NOTE: Before you remove the TouchPad assembly, make sure nothing (memory card or plastic insert) in installed.

1. Position the top cover upside-down.
2. Disconnect the cable from the connector on the TouchPad **(1)**.
3. Remove the 4 Phillips PM2.0×2.0 screws **(2)** that secure the TouchPad to the top cover.
4. Rotate the top of the TouchPad upward **(3)**, and then pull the board toward the top of the top cover to remove it **(4)**.

5. If you need to replace the TouchPad assembly cable, note how it is routed in the top cover **(5)**.

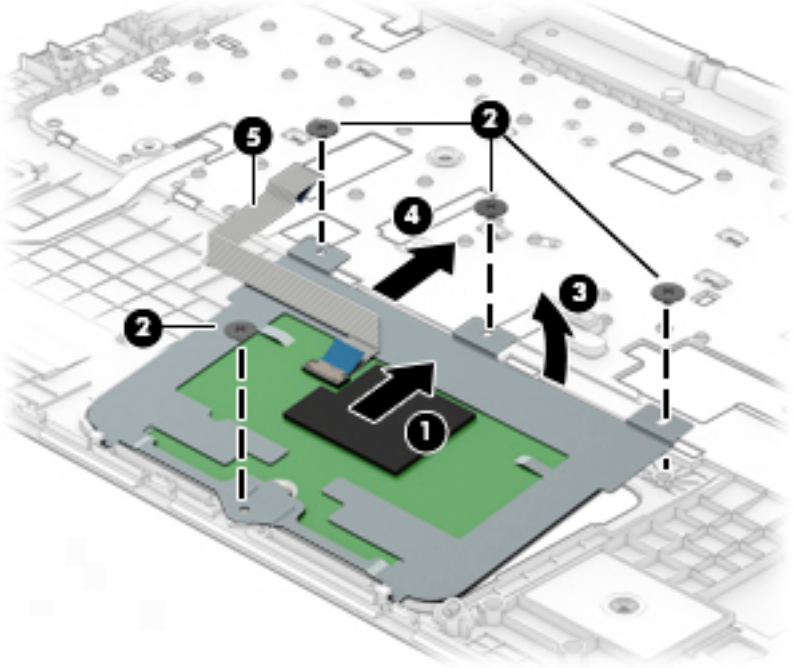

Reverse this procedure to install the TouchPad assembly.

Battery

Description	Spare part number
Battery, 4-cell, 48 WHr, 4.21 Ah	851610-855

Before removing the battery, follow these steps:

1. Shut down the computer. If you are unsure whether the computer is off or in Hibernation, turn the computer on, and then shut it down through the operating system.
2. Place the computer in “Battery Safe mode” (Battery Safe mode on page 31).
3. Disconnect all external devices connected to the computer.
4. Disconnect the power from the computer by first unplugging the power cord from the AC outlet, and then unplugging the AC adapter from the computer.
5. Remove the following components:
   a. Service door (see Service doors on page 32).
   b. Hard drive (Hard drive on page 34)
   c. Keyboard (see Keyboard on page 43)
   d. Top cover (see Top cover on page 50)

To remove the battery:

⚠ **CAUTION:** Removing a battery that is the sole power source for the computer can cause loss of information. To prevent loss of information, save your work and shut down the computer through Windows before removing the battery.

1. Position the computer upright on a flat surface.
2. Remove the 3 Torx T8 2.5×5.0 screws **(1)** that secure the battery to the computer.

3. Rotate the top of the battery upward **(2)**, and then lift the battery out of the computer **(3)**.

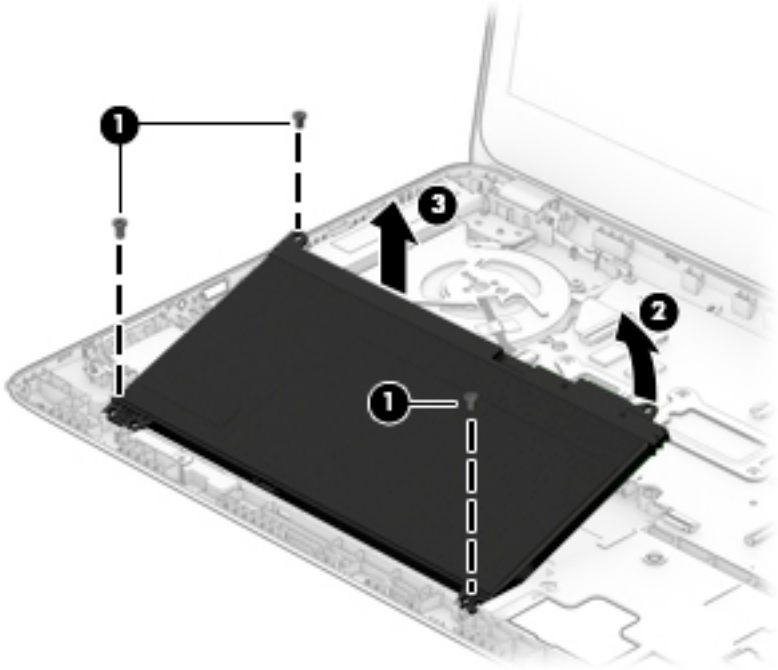

Reverse this procedure to install the battery.

USB/audio board

Description	Spare part number
USB/audio board	905713-001
USB/audio board cable (included in Cable Kit)	905707-001

Before removing the USB/audio board, follow these steps:

1. Shut down the computer. If you are unsure whether the computer is off or in Hibernation, turn the computer on, and then shut it down through the operating system.
2. Disconnect all external devices connected to the computer.
3. Disconnect the power from the computer by first unplugging the power cord from the AC outlet, and then unplugging the AC adapter from the computer.
4. Remove the following components:
   a. Service door (see Service doors on page 32).
   b. Hard drive (Hard drive on page 34)
   c. Keyboard (see Keyboard on page 43)
   d. Top cover (see Top cover on page 50)
   e. Battery (see Battery on page 62)

Remove the USB/audio board:

1. Position the computer upright on a flat surface.
2. Disconnect the cable from the board **(1)**.
3. Remove the 2 Phillips PM2.5×5.0 screws **(2)** that secure the board to the computer.
4. Lift the board out of the computer **(3)**.

5. If you need to replace the cable, note its routing path **(4)**.

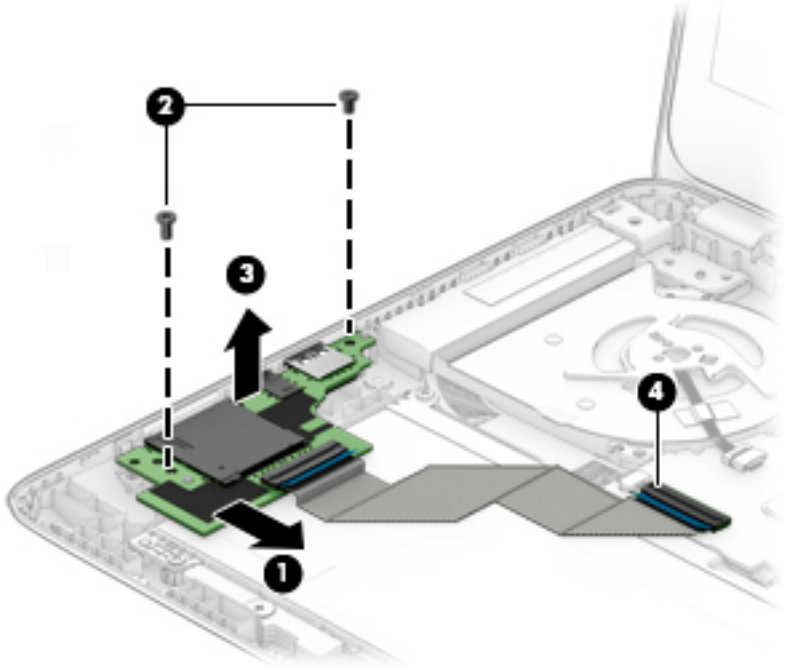

Reverse this procedure to install the USB/audio board.

Fan

Description	Spare part number
Fan	905706-001

NOTE: To properly ventilate the computer, allow at least **7.6 cm** (3.0 in) of clearance on the left side of the computer. The computer uses an electric fan for ventilation. The fan is controlled by a temperature sensor and is designed to turn on automatically when high temperature conditions exist. These conditions are affected by high external temperatures, system power consumption, power management/battery conservation configurations, battery fast charging, and software requirements. Exhaust air is displaced through the ventilation grill located on the left side of the computer.

Before removing the fan/heat sink assembly, follow these steps:

1. Shut down the computer. If you are unsure whether the computer is off or in Hibernation, turn the computer on, and then shut it down through the operating system.
2. Disconnect all external devices connected to the computer.
3. Disconnect the power from the computer by first unplugging the power cord from the AC outlet and then unplugging the AC adapter from the computer.
4. Remove the battery (see Battery on page 62), and then remove the following components:
   a. Service door (see Service doors on page 32).
   b. Hard drive (Hard drive on page 34)
   c. Keyboard (see Keyboard on page 43)
   d. Top cover (see Top cover on page 50)
   e. Battery (see Battery on page 62)

To remove the fan:

1. Position the computer upright on a flat surface.
2. Disconnect the fan cable **(1)** from the system board.
3. Remove the Phillips PM2.5×5.0 screw **(2)** that secures the fan to the computer.

4. Lift the fan from the computer **(3)**.

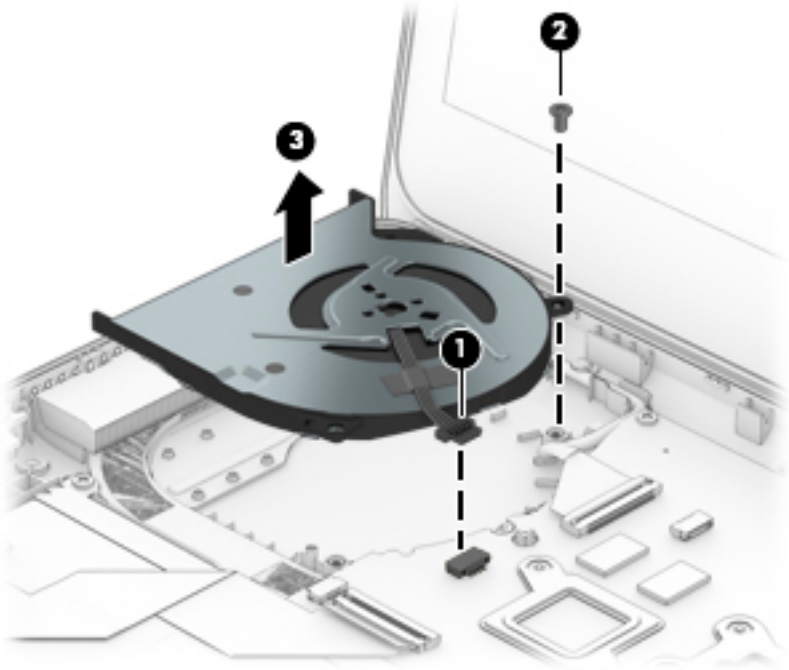

Reverse this procedure to install the fan.

System board

NOTE: All system board spare part kits include replacement thermal material.

All system boards use the following part numbers:

xxxxxx-001: Non-Windows operating systems

xxxxxx-601: Windows 10 operating system

Description	Spare part number
System board with processor for use in models with UMA graphics:	
Intel Core i7-7500U processor	905797-xxx
Intel Core i5-7300U processor	905796-xxx
Intel Core i5-7200U processor (WWAN models)	905795-xxx
Intel Core i5-7200U processor	905794-xxx
Intel Core i3-7100U processor (WWAN models)	905793-xxx
Intel Core i3-7100U processor	905792-xxx
System board with processor for use in models with 2 GB of discrete graphics:	
Intel Core i7-7500U processor	913101-xxx
Intel Core i5-7300U processor	913100-xxx
Intel Core i3-7100U processor	913099-xxx

Before removing the system board, follow these steps:

1. Shut down the computer. If you are unsure whether the computer is off or in Hibernation, turn the computer on, and then shut it down through the operating system.
2. Disconnect all external devices connected to the computer.
3. Disconnect the power from the computer by first unplugging the power cord from the AC outlet, and then unplugging the AC adapter from the computer.
4. Remove the following components:
   a. Service door (see Service doors on page 32).
   b. Hard drive (see Hard drive on page 34)
   c. Keyboard (see Keyboard on page 43)
   d. Top cover (see Top cover on page 50)
   e. Battery (see Battery on page 62)

When replacing the system board, be sure to remove the following components (as applicable) from the defective system board and install on the replacement system board:

- Memory modules (see Memory modules on page 36)
- WLAN/Bluetooth module (see WLAN/Bluetooth combo card on page 38)
- WWAN module (see WWAN module on page 40)

- M.2 solid-state drive (see M.2 solid-state drive on page 42)
- Heat sink (see Heat sink assembly on page 72)

Remove the system board:

1. Position the computer upright on a flat surface.
2. Disconnect the following cables from the system board:

   (1) Display cable

   (2) Power connector cable

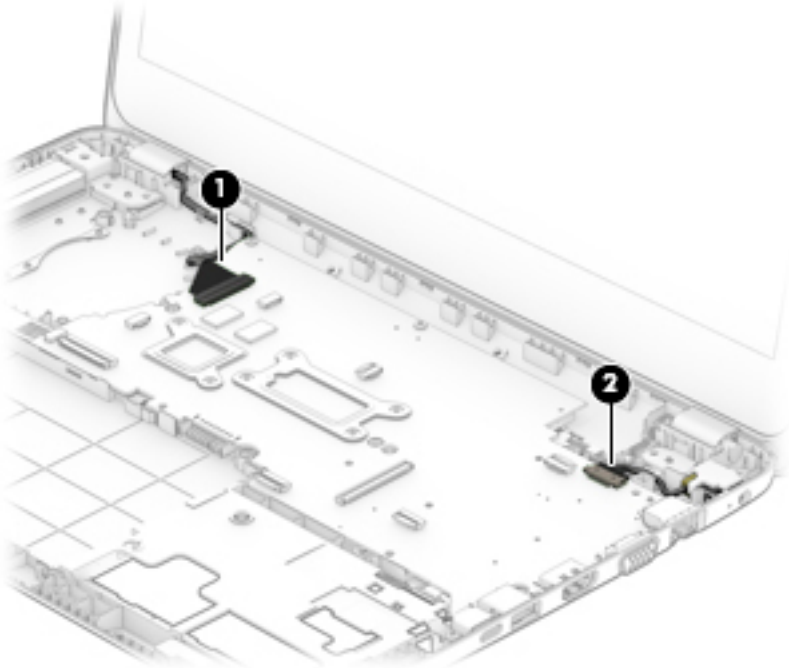

3. Remove the 3 Phillips PM2.5×5.0 screws **(1)** that secure the system board to the computer.
4. Lift the bracket from atop the USB-Type C port **(2)**.
5. Rotate the right side of the system board upward **(3)**.
6. Pull the hard drive cable through the hole in the chassis when removing the system board **(4)**.

7. Pull the system board away from the connectors on the side of the chassis to remove it from the computer **(5)**.

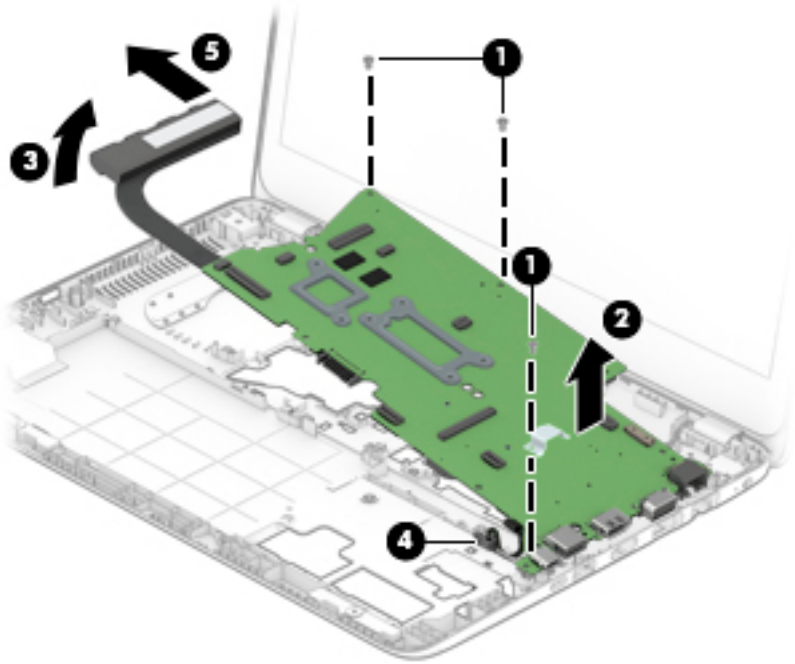

Reverse this procedure to install the system board.

RTC battery

Description	Spare part number
RTC battery	not spared

Before removing the RTC battery, follow these steps:

1. Shut down the computer. If you are unsure whether the computer is off or in Hibernation, turn the computer on, and then shut it down through the operating system.
2. Disconnect all external devices connected to the computer.
3. Disconnect the power from the computer by first unplugging the power cord from the AC outlet, and then unplugging the AC adapter from the computer.
4. Remove the following components:
   a. Service door (see Service doors on page 32).
   b. Hard drive (see Hard drive on page 34)
   c. WLAN module (see WLAN/Bluetooth combo card on page 38)
   d. WWAN module (see WWAN module on page 40)
   e. Keyboard (see Keyboard on page 43)
   f. Top cover (see Top cover on page 50)
   g. Battery (see Battery on page 62)
   h. System board (see System board on page 68)

Remove the RTC battery:

1. Position the system board upside-down.
2. Use a tool to pry the battery out of the socket **(1)**.
3. Remove the battery from the system board **(2)**.

Reverse this procedure to install the RTC battery.

Heat sink assembly

All heat sink assembly spare part kits include replacement thermal material.

Description	Spare part number
Heat sink for use in models with UMA graphics	910980-001
Heat sink for use in models with discrete graphics	910981-001

Before removing the heat sink assembly, follow these steps:

1. Shut down the computer. If you are unsure whether the computer is off or in Hibernation, turn the computer on, and then shut it down through the operating system.
2. Disconnect all external devices connected to the computer.
3. Disconnect the power from the computer by first unplugging the power cord from the AC outlet, and then unplugging the AC adapter from the computer.
4. Remove the following components:
   a. Service door (see Service doors on page 32).
   b. Hard drive (see Hard drive on page 34)
   c. WLAN module (see WLAN/Bluetooth combo card on page 38)
   d. WWAN module (see WWAN module on page 40)
   e. Keyboard (see Keyboard on page 43)
   f. Top cover (see Top cover on page 50)
   g. Battery (see Battery on page 62)
   h. System board (see System board on page 68)

Remove the heat sink assembly:

1. Position the system board upside-down.
2. **Discrete models:** In the order indicated on the heat sink, loosen the 6 captive Phillips screws **(1)**–**(6)** that secure the heat sink to the system board.

3. Lift the heat sink from the system board **(7)**.

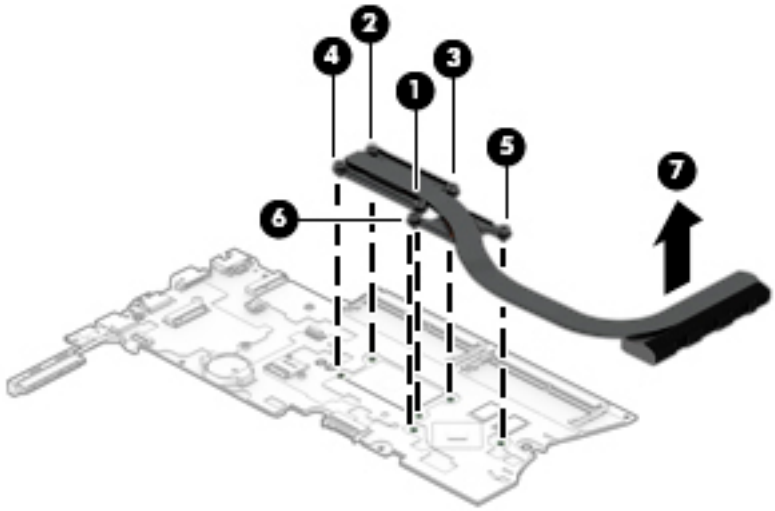

NOTE: Thoroughly clean thermal material from the surfaces of the system board components **(1)(3)** and the heat sink **(2)(4)** each time you remove the heat sink. All heat sink and processor spare part kits include thermal material.

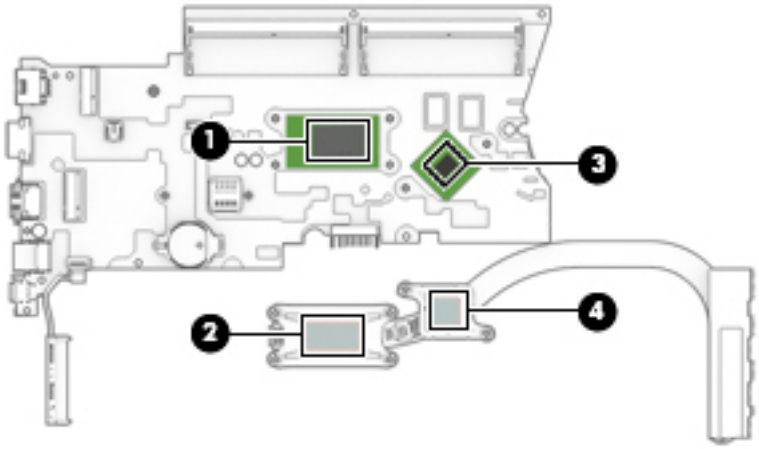

4. **UMA models:** In the order indicated on the heat sink, loosen the 4 captive Phillips screws **(1)**–**(4)** that secure the heat sink to the system board.

5. Lift the heat sink from the system board **(5)**.

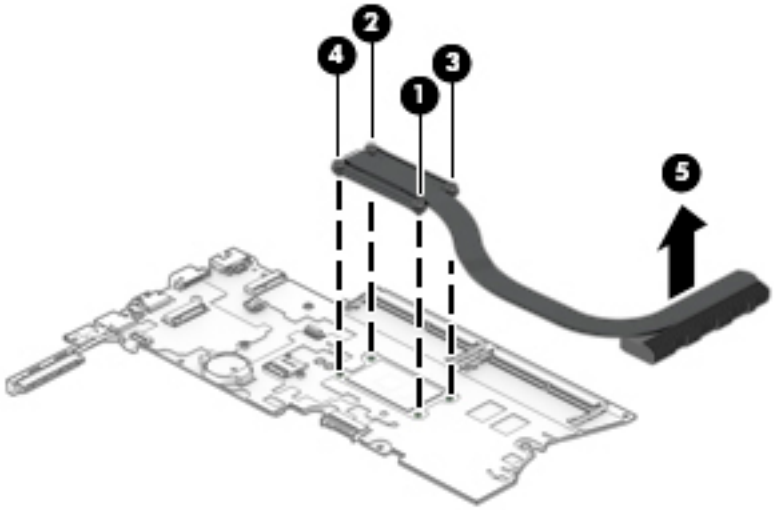

NOTE: Thoroughly clean thermal material from the surfaces of the system board components **(1)** and the heat sink **(2)** each time you remove the heat sink. All heat sink and processor spare part kits include thermal material.

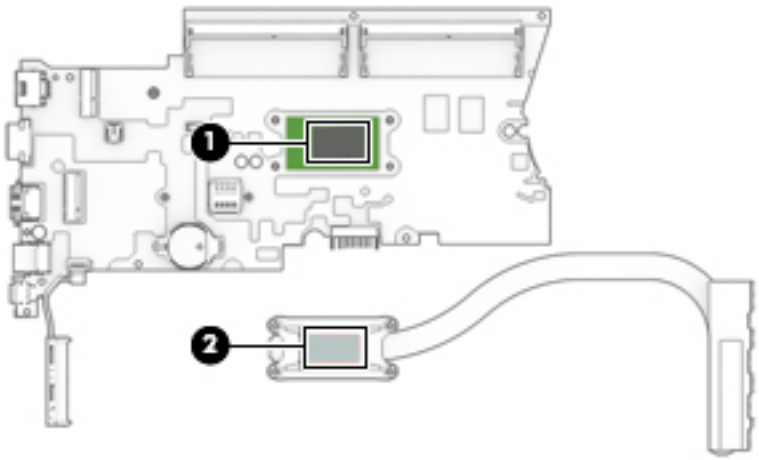

Reverse this procedure to install the heat sink assembly.

Display assembly

Description	Spare part number
Display panel assembly, touch screen	906973-001
Touch display are only spared as entire hinge-ups. Individual components are not spared.	
Non-touch displays are ONLY spared at the subcomponent level. For more information about display components, see Display components on page 20.	

This section describes removing components that require you to completely remove the display panel. For more information about removing display components that do not require that you remove the assembly from the computer, see Display subcomponents (bezel, webcam, panel) on page 46.

Before removing the display assembly, follow these steps:

1. Shut down the computer. If you are unsure whether the computer is off or in Hibernation, turn the computer on, and then shut it down through the operating system.
2. Disconnect all external devices connected to the computer.
3. Disconnect the power from the computer by first unplugging the power cord from the AC outlet, and then unplugging the AC adapter from the computer.
4. Remove the following components:
   a. Service door (see Service doors on page 32).
   b. Hard drive (see Hard drive on page 34)
   c. WLAN module (see WLAN/Bluetooth combo card on page 38)
   d. WWAN module (see WWAN module on page 40)
   e. Keyboard (see Keyboard on page 43)
   f. Top cover (see Top cover on page 50)
   g. Battery (see Battery on page 62)

Remove the display assembly:

1. Position the computer upright on a flat surface.
2. Disconnect the display cable from the system board **(1)**.
3. Pull the wireless antennas through the hole in the computer **(2)**.
4. Remove the 4 Phillips PM2.5×4.0 screws **(3)** from the display hinges.

5. Lift the display assembly straight up and remove it **(4)**.

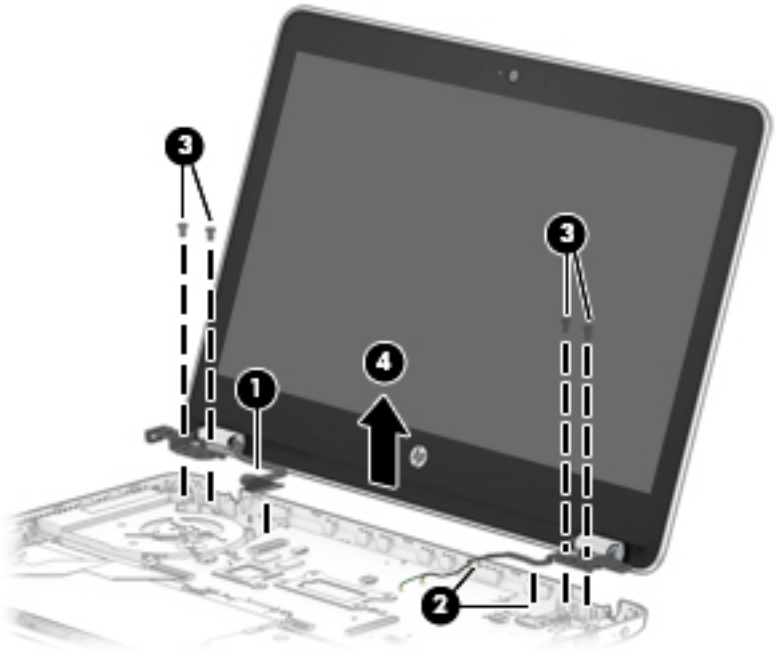

CAUTION: When installing the display assembly, be sure that the wireless antenna cables are routed and arranged properly. Failure to properly route the antennas can result in degradation of the computer's wireless performance.

6. Flex the top **(1)** of the bezel, the inside edges of the left and right sides **(2)**, and then the bottom **(3)** of the bezel until it disengages from the display enclosure.

7. Remove the display bezel **(4)**.

   The display bezel is available using the following spare part numbers:

   905693-001: Models with a webcam

   905692-001: Models without a webcam

NOTE: The display will not be connected to the computer as shown in the following image.

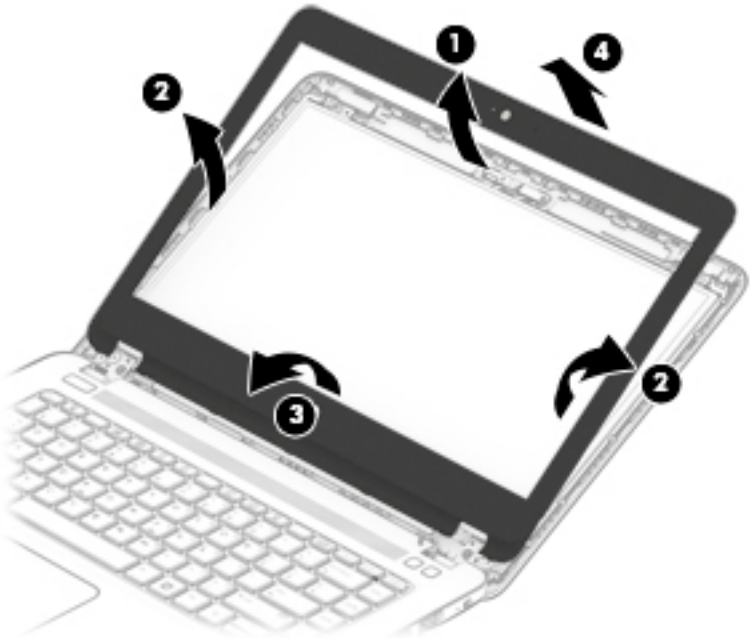

8. If it is necessary to replace the webcam or microphone module, gently pull the module away from the double-sided tape on the display enclosure **(1)**, and then disconnect the cable from the module **(2)**.

   The webcam module is available using spare part number 805139-009.

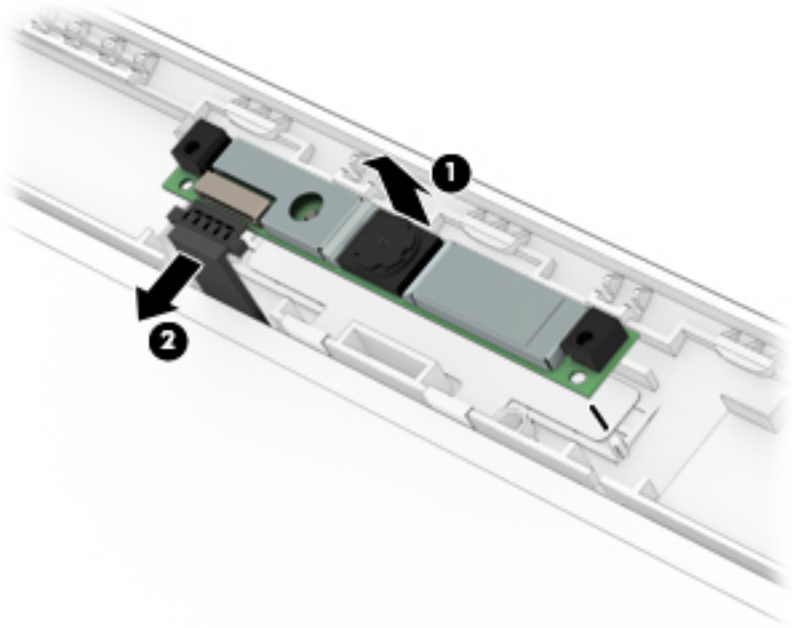

9. If it is necessary to remove or replace the display panel, remove the 4 Phillips PM2.0×3.0 screws **(1)** that secure the display panel to the enclosure.
10. Rotate the display panel onto the keyboard **(2)** to gain access to the display cable connection on the back of the panel.

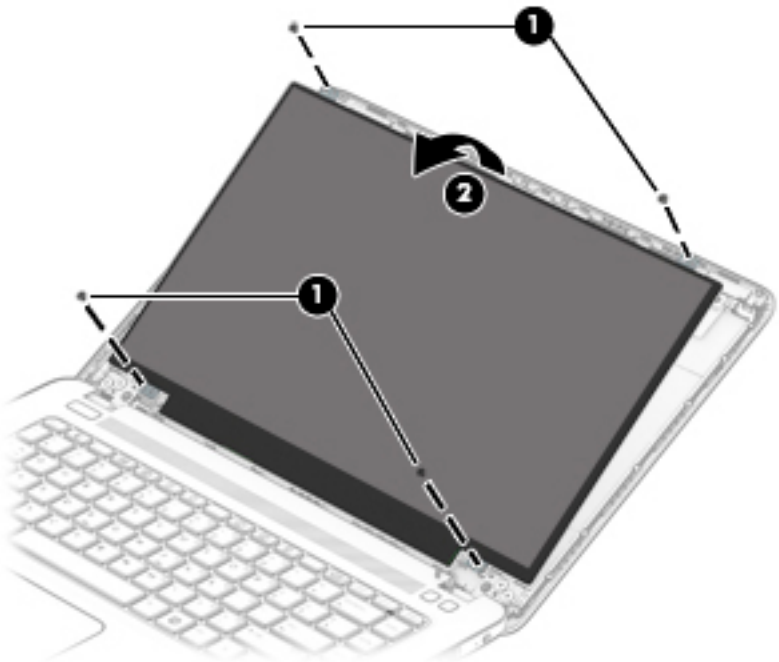

11. On the back of the display panel, release the adhesive strip that secures the display panel cable to the display panel **(1)**, and then disconnect the cable **(2)**.
12. Remove the display panel from the display enclosure **(3)**.

    Raw display panels are available using spare part number 839668-002 for HD panels and 809002-002 for FHD panels.

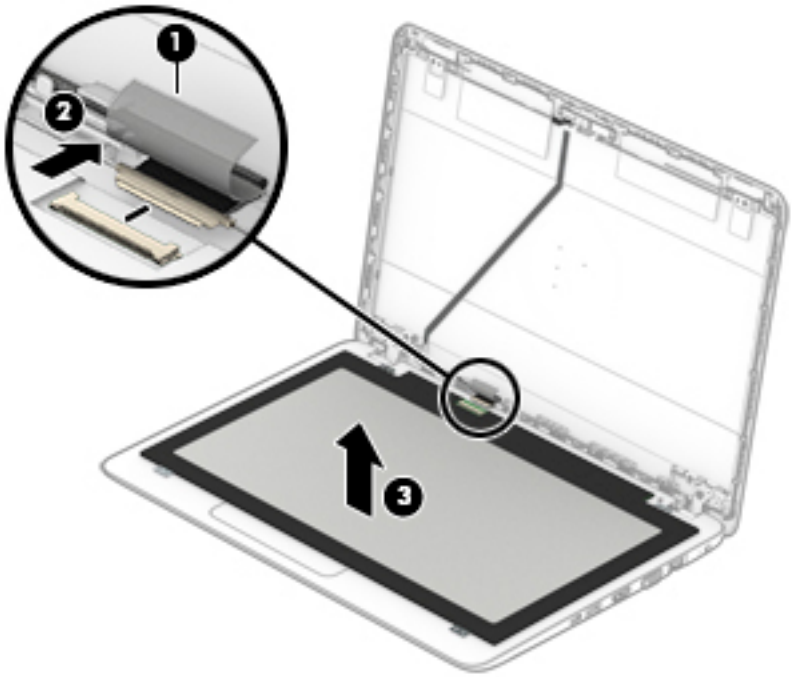

13. If it is necessary to remove or replace the hinge covers, remove the 2 Phillips PM2.5×2.5 screws **(1)** that secure the hinge covers to the display enclosure.
14. Remove the hinge covers from the display hinges **(2)**.

    Display hinge covers are available using spare part number 905699-001.

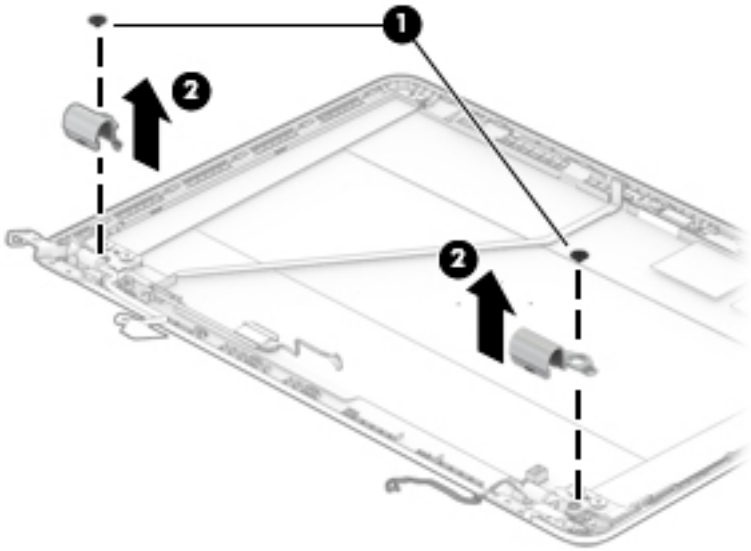

15. If it is necessary to remove or replace the display hinges, remove the 6 Phillips PM2.5×2.5 screws **(1)** that secure both display hinges to the display enclosure.
16. Remove the display hinges from the display enclosure **(2)**.

    Display hinges are available in the Display Hinge Kit using spare part number 905698-001.

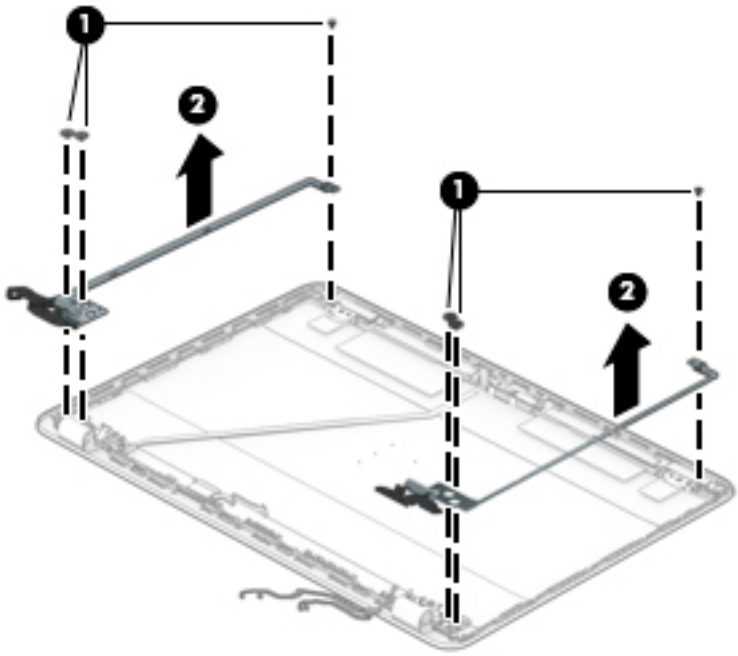

17. If it is necessary to replace the display/webcam cable, remove the webcam cable from the clips in the display enclosure **(1)**, and the clips at the bottom of the display enclosure **(2)**.

18. Remove the cable from the display enclosure **(3)**.

    The display/webcam cable is available using spare part number 905696-001 for WLAN models, 905697-001 for WWAN models.

    The display enclosure is available using spare part number 905694-001 for WLAN models or 905695-001 for WWAN models.

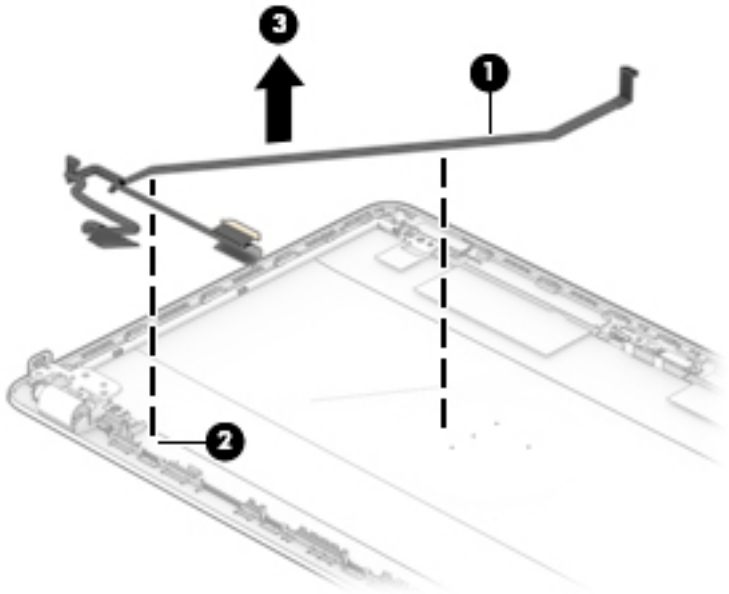

Reverse this procedure to reassemble and install the display assembly.

Power connector and cable

Description	Spare part number
Power connector and cable	905644-001

Before removing the power cable, follow these steps:

1. Shut down the computer. If you are unsure whether the computer is off or in Hibernation, turn the computer on, and then shut it down through the operating system.
2. Disconnect all external devices connected to the computer.
3. Disconnect the power from the computer by first unplugging the power cord from the AC outlet, and then unplugging the AC adapter from the computer.
4. Remove the following components:
   a. Service door (see Service doors on page 32).
   b. Hard drive (Hard drive on page 34)
   c. Keyboard (see Keyboard on page 43)
   d. Top cover (see Top cover on page 50)
   e. Battery (see Battery on page 62)
   f. Display assembly (see Display assembly on page 75)

Remove the power cable:

1. Disconnect the cable from the system board **(1)**.
2. Remove the cable from the clip in the computer **(2)**.
3. Remove the power cable from the computer **(3)**.

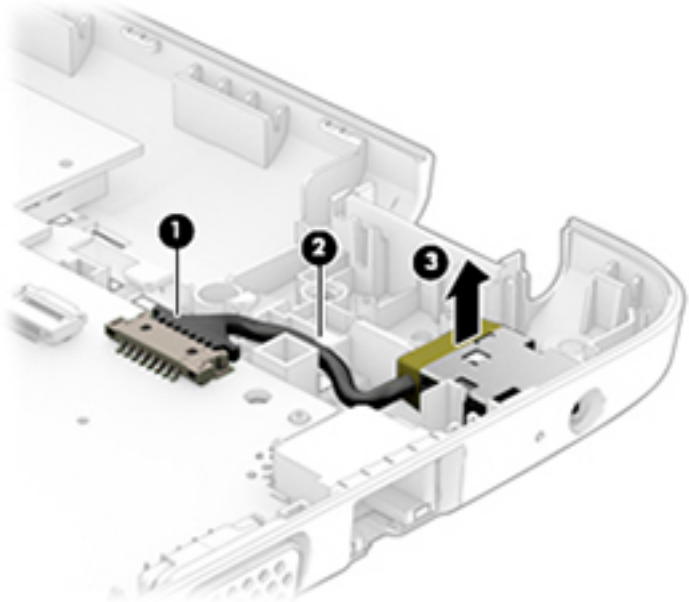

Reverse this procedure to install the power cable.

7 Computer Setup (BIOS), TPM, and HP Sure Start

Using Computer Setup

Computer Setup, or Basic Input/Output System (BIOS), controls communication between all the input and output devices on the system (such as disk drives, display, keyboard, mouse, and printer). Computer Setup includes settings for the types of devices installed, the startup sequence of the computer, and the amount of system and extended memory.

NOTE: Use extreme care when making changes in Computer Setup. Errors can prevent the computer from operating properly.

Starting Computer Setup

NOTE: An external keyboard or mouse connected to a USB port can be used with Computer Setup only if USB legacy support is enabled.

▲ Turn on or restart the computer, and when the HP logo appears, press f10 to enter Computer Setup.

Navigating and selecting in Computer Setup

- To select a menu or a menu item, use the tab key and the keyboard arrow keys and then press enter, or use a pointing device to select the item.
- To scroll up and down, select the up arrow or the down arrow in the upper-right corner of the screen, or use the up arrow key or the down arrow key on the keyboard.
- To close open dialog boxes and return to the main Computer Setup screen, press esc, and then follow the on-screen instructions.

To exit Computer Setup menus, choose one of the following methods:

- To exit Computer Setup menus without saving your changes:

  Select the **Exit** icon in the lower-right corner of the screen, and then follow the on-screen instructions.

  – or –

  Select **Main**, select **Ignore Changes and Exit**, and then press enter.

- To save your changes and exit Computer Setup menus:

  Select the **Save** icon in the lower-right corner of the screen, and then follow the on-screen instructions.

  – or –

  Select **Main**, select **Save Changes and Exit**, and then press enter.

Your changes go into effect when the computer restarts.

Restoring factory settings in Computer Setup

NOTE: Restoring defaults will not change the hard drive mode.

To return all settings in Computer Setup to the values that were set at the factory, follow these steps:

1. Start Computer Setup. See Starting Computer Setup on page 83.
2. Select **Main**, and then select **Apply Factory Defaults and Exit**.

   NOTE: On select products, the selections may display **Restore Defaults** instead of **Apply Factory Defaults and Exit**.

3. Follow the on-screen instructions.
4. To save your changes and exit, select the **Save** icon in the lower-right corner of the screen, and then follow the on-screen instructions.

   – or –

   Select **Main**, select **Save Changes and Exit**, and then press enter.

Your changes go into effect when the computer restarts.

NOTE: Your password settings and security settings are not changed when you restore the factory settings.

Updating the BIOS

Updated versions of the BIOS may be available on the HP website.

Most BIOS updates on the HP website are packaged in compressed files called *SoftPaqs*.

Some download packages contain a file named Readme.txt, which contains information regarding installing and troubleshooting the file.

Determining the BIOS version

To decide whether you need to update Computer Setup (BIOS), first determine the BIOS version on your computer.

BIOS version information (also known as *ROM date* and *System BIOS*) can be accessed by pressing fn+esc (if you are already in Windows) or by using Computer Setup.

1. Start Computer Setup. See Starting Computer Setup on page 83.
2. Select **Main**, and then select **System Information**.
3. To exit Computer Setup without saving your changes, select the **Exit** icon in the lower-right corner of the screen, and then follow the on-screen instructions.

   – or –

   Select **Main**, select **Ignore Changes and Exit**, and then press enter.

To check for later BIOS versions, see Downloading a BIOS update on page 85.

Downloading a BIOS update

CAUTION: To reduce the risk of damage to the computer or an unsuccessful installation, download and install a BIOS update only when the computer is connected to reliable external power using the AC adapter. Do not download or install a BIOS update while the computer is running on battery power, docked in an optional docking device, or connected to an optional power source. During the download and installation, follow these instructions:

Do not disconnect power on the computer by unplugging the power cord from the AC outlet.

Do not shut down the computer or initiate Sleep.

Do not insert, remove, connect, or disconnect any device, cable, or cord.

1. Type `support` in the taskbar search box, and then select the HP Support Assistant app.

   – or –

   Select the question mark icon in the taskbar.

2. Select **Updates**, and then select **Check for updates and messages**.
3. Follow the on-screen instructions.
4. At the download area, follow these steps:

   a. Identify the most recent BIOS update and compare it to the BIOS version currently installed on your computer. Make a note of the date, name, or other identifier. You may need this information to locate the update later, after it has been downloaded to your hard drive.

   b. Follow the on-screen instructions to download your selection to the hard drive.

      Make a note of the path to the location on your hard drive where the BIOS update is downloaded. You will need to access this path when you are ready to install the update.

NOTE: If you connect your computer to a network, consult the network administrator before installing any software updates, especially system BIOS updates.

BIOS installation procedures vary. Follow any instructions that are revealed on the screen after the download is complete. If no instructions are revealed, follow these steps:

1. Type `file` in the taskbar search box, and then select **File Explorer**.
2. Select your hard drive designation. The hard drive designation is typically Local Disk (C:).
3. Using the hard drive path you recorded earlier, open the folder that contains the update.
4. Double-click the file that has an .exe extension (for example, *filename*.exe).

   The BIOS installation begins.

5. Complete the installation by following the on-screen instructions.

NOTE: After a message on the screen reports a successful installation, you can delete the downloaded file from your hard drive.

Changing the boot order using the f9 prompt

To dynamically choose a boot device for the current startup sequence, follow these steps:

1. Access the Boot Device Options menu:

- Turn on or restart the computer, and when the HP logo appears, press f9 to enter the Boot Device Options menu.

2. Select a boot device, then press enter.

TPM BIOS settings (select products only)

IMPORTANT: Before enabling Trusted Platform Module (TPM) functionality on this system, you must ensure that your intended use of TPM complies with relevant local laws, regulations and policies, and approvals or licenses must be obtained if applicable. For any compliance issues arising from your operation/usage of TPM which violates the above mentioned requirement, you shall bear all the liabilities wholly and solely. HP will not be responsible for any related liabilities.

TPM provides additional security for your computer. You can modify the TPM settings in Computer Setup (BIOS).

NOTE: If you change the TPM setting to Hidden, TPM is not visible in the operating system.

To access TPM settings in Computer Setup:

1. Start Computer Setup. See Starting Computer Setup on page 83.
2. Select **Security**, select **TPM Embedded Security**, and then follow the on-screen instructions.

Using HP Sure Start (select products only)

Select computer models are configured with HP Sure Start, a technology that monitors the computer's BIOS for attacks or corruption. If the BIOS becomes corrupted or is attacked, HP Sure Start automatically restores the BIOS to its previously safe state, without user intervention.

HP Sure Start is configured and already enabled so that most users can use the HP Sure Start default configuration. The default configuration can be customized by advanced users.

To access the latest documentation on HP Sure Start, go to http://www.hp.com/support. Select **Find your product**, and then follow the on-screen instructions.

8 Using HP PC Hardware Diagnostics (UEFI)

HP PC Hardware Diagnostics is a Unified Extensible Firmware Interface (UEFI) that allows you to run diagnostic tests to determine whether the computer hardware is functioning properly. The tool runs outside the operating system so that it can isolate hardware failures from issues that are caused by the operating system or other software components.

When HP PC Hardware Diagnostics (UEFI) detects a failure that requires hardware replacement, a 24-digit Failure ID code is generated. This ID code can then be provided to support to help determine how to correct the problem.

NOTE: To start diagnostics on a convertible computer, your computer must be in notebook mode and you must use the keyboard attached.

To start HP PC Hardware Diagnostics (UEFI), follow these steps:

1. Turn on or restart the computer, and quickly press esc.
2. Press f2.

   The BIOS searches three places for the diagnostic tools, in the following order:

   a. Connected USB drive

      NOTE: To download the HP PC Hardware Diagnostics (UEFI) tool to a USB drive, see Downloading HP PC Hardware Diagnostics (UEFI) to a USB device on page 87.

   b. Hard drive

   c. BIOS
3. When the diagnostic tool opens, select the type of diagnostic test you want to run, and then follow the on-screen instructions.

NOTE: If you need to stop a diagnostic test, press esc.

Downloading HP PC Hardware Diagnostics (UEFI) to a USB device

NOTE: The HP PC Hardware Diagnostics (UEFI) download instructions are provided in English only, and you must use a Windows computer to download and create the HP UEFI support environment because only .exe files are offered.

There are two options to download HP PC Hardware Diagnostics to a USB device.

Download the latest UEFI version

1. Go to http://www.hp.com/go/techcenter/pcdiags. The HP PC Diagnostics home page is displayed.
2. In the HP PC Hardware Diagnostics section, select the **Download** link, and then select **Run**.

Download any version of UEFI for a specific product

1. Go to http://www.hp.com/support.
2. Select **Get software and drivers**.

3. Enter the product name or number.

   – or –

   Select **Identify now** to let HP automatically detect your product.

4. Select your computer, and then select your operating system.

5. In the **Diagnostic** section, follow the on-screen instructions to select and download the UEFI version you want.

Additional BIOS crisis recovery tool

HP provides a BIOS crisis recovery tool through the HP PC Hardware Diagnostics 3-in-1 USB key. This tool can be used by HP authorized service providers to recover systems that have failed due to a corrupted BIOS. For more information about using the 3-in-1 USB key for BIOS crisis recovery, go to http://www.hp.com/go/techcenter/pcdiags. Additional information is included in the web-based training offered by HP University. See the modules that cover HP PC Hardware Diagnostics (UEFI).

Blink and beep codes

Some system errors prevent the use of the video screen; instead, the system provides error information through blink codes using lights. The codes are presented in a sequence. Audible long and short beeps accompany blinks, respectively. The following table describes the meaning of critical blink codes.

Num lock light	Battery light	Description
2		The main area (DXE) of BIOS has become corrupted and there is no recovery binary image available.
8		The embedded controller policy requires the user to enter a key sequence (SureStart 2.0).
	White and amber blinking	The embedded controller is recovering the boot block or DXE. It takes about 10 seconds to load the DXE image and get video in the DXE case.
3		The embedded controller has timed out waiting for BIOS to return from memory initialization.
4		The embedded controller has timed out waiting for BIOS to return from graphics initialization.
5		The system board displays a power failure (crowbar).
		The processor is not detected.
		The processor does not support an enabled feature (typically this applies only to TXT).
7	1	The embedded controller cannot find valid firmware.

9 Backup and recovery

This chapter provides information about the following processes. The information in the chapter is standard procedure for most products.

- Creating recovery media and backups
- Restoring and recovering your system

For additional information, refer to the HP support assistant app.

▲ Type `support` in the taskbar search box, and then select the **HP Support Assistant** app.

– or –

Click the question mark icon in the taskbar.

IMPORTANT: If you will be performing recovery procedures on a tablet, the tablet battery must be at least 70% charged before you start the recovery process.

IMPORTANT: For a tablet with a detachable keyboard, connect the keyboard to the keyboard dock before beginning any recovery process.

Creating recovery media and backups

The following methods of creating recovery media and backups are available on select products only. Choose the available method according to your computer model.

- Use HP Recovery Manager to create HP Recovery media after you successfully set up the computer. This step creates a backup of the HP Recovery partition on the computer. The backup can be used to reinstall the original operating system in cases where the hard drive is corrupted or has been replaced. For information on creating recovery media, see Creating HP Recovery media (select products only) on page 89. For information on the recovery options that are available using the recovery media, see Using Windows tools on page 90.
- Use Windows tools to create system restore points and create backups of personal information.

  For more information, see Recovering using HP Recovery Manager on page 91.

NOTE: If storage is 32 GB or less, Microsoft System Restore is disabled by default.

Creating HP Recovery media (select products only)

If possible, check for the presence of the Recovery partition and the Windows partition. From the **Start** menu, select **File Explorer**, and then select **This PC**.

- If your computer does not list the Windows partition and the Recovery partition, you can obtain recovery media for your system from support. See the *Worldwide Telephone Numbers* booklet included with the computer. You can also find contact information on the HP website. Go to http://www.hp.com/support, select your country or region, and follow the on-screen instructions.

You can use Windows tools to create system restore points and create backups of personal information, see Using Windows tools on page 90.

- If your computer does list the Recovery partition and the Windows partition, you can use HP Recovery Manager to create recovery media after you successfully set up the computer. HP Recovery media can be used to perform system recovery if the hard drive becomes corrupted. System recovery reinstalls the original operating system and software programs that were installed at the factory and then configures the settings for the programs. HP Recovery media can also be used to customize the system or restore the factory image if you replace the hard drive.
  - Only one set of recovery media can be created. Handle these recovery tools carefully, and keep them in a safe place.
  - HP Recovery Manager examines the computer and determines the required storage capacity for the media that will be required.
  - To create recovery discs, your computer must have an optical drive with DVD writer capability, and you must use only high-quality blank DVD-R, DVD+R, DVD-R DL, or DVD+R DL discs. Do not use rewritable discs such as CD±RW, DVD±RW, double-layer DVD±RW, or BD-RE (rewritable Blu-ray) discs; they are not compatible with HP Recovery Manager software. Or, instead, you can use a high-quality blank USB flash drive.
  - If your computer does not include an integrated optical drive with DVD writer capability, but you would like to create DVD recovery media, you can use an external optical drive (purchased separately) to create recovery discs. If you use an external optical drive, it must be connected directly to a USB port on the computer; the drive cannot be connected to a USB port on an external device, such as a USB hub. If you cannot create DVD media yourself, you can obtain recovery discs for your computer from HP. See the *Worldwide Telephone Numbers* booklet included with the computer. You can also find contact information on the HP website. Go to http://www.hp.com/support, select your country or region, and follow the on-screen instructions.
  - Be sure that the computer is connected to AC power before you begin creating the recovery media.
  - The creation process can take an hour or more. Do not interrupt the creation process.
  - If necessary, you can exit the program before you have finished creating all of the recovery DVDs. HP Recovery Manager will finish burning the current DVD. The next time you start HP Recovery Manager, you will be prompted to continue.

To create HP Recovery media:

IMPORTANT: For a tablet with a detachable keyboard, connect the keyboard to the keyboard dock before beginning these steps.

1. Type `recovery` in the taskbar search box, and then select **HP Recovery Manager**.
2. Select **Create recovery media**, and then follow the on-screen instructions.

If you ever need to recover the system, see Recovering using HP Recovery Manager on page 91.

Using Windows tools

You can create recovery media, system restore points, and backups of personal information using Windows tools.

NOTE: If storage is 32 GB or less, Microsoft System Restore is disabled by default.

For more information and steps, see the Get started app.

- Select the **Start** button, and then select the **Get started** app.

Restore and recovery

There are several options for recovering your system. Choose the method that best matches your situation and level of expertise:

IMPORTANT: Not all methods are available on all products.

- Windows offers several options for restoring from backup, refreshing the computer, and resetting the computer to its original state. For more information see the Get started app.

  ▲ Select the **Start** button, and then select the **Get started** app.

- If you need to correct a problem with a preinstalled application or driver, use the Reinstall drivers and/or applications option (select products only) of HP Recovery Manager to reinstall the individual application or driver.

  ▲ Type `recovery` in the taskbar search box, select **HP Recovery Manager**, select **Reinstall drivers and/or applications**, and then follow the on-screen instructions.

- If you want to recover the Windows partition to original factory content, you can choose the System Recovery option from the HP Recovery partition (select products only) or use the HP Recovery media. For more information, see Recovering using HP Recovery Manager on page 91. If you have not already created recovery media, see Creating HP Recovery media (select products only) on page 89.

- On select products, if you want to recover the computer's original factory partition and content, or if you have replaced the hard drive, you can use the Factory Reset option of HP Recovery media. For more information, see Recovering using HP Recovery Manager on page 91.

- On select products, if you want to remove the recovery partition to reclaim hard drive space, HP Recovery Manager offers the Remove Recovery Partition option.

  For more information, see Removing the HP Recovery partition (select products only) on page 94.

Recovering using HP Recovery Manager

HP Recovery Manager software allows you to recover the computer to its original factory state by using the HP Recovery media that you either created or that you obtained from HP, or by using the HP Recovery partition (select products only). If you have not already created recovery media, see Creating HP Recovery media (select products only) on page 89.

What you need to know before you get started

- HP Recovery Manager recovers only software that was installed at the factory. For software not provided with this computer, you must either download the software from the manufacturer's website or reinstall the software from the media provided by the manufacturer.

  IMPORTANT: Recovery through HP Recovery Manager should be used as a final attempt to correct computer issues.

- HP Recovery media must be used if the computer hard drive fails. If you have not already created recovery media, see Creating HP Recovery media (select products only) on page 89.

- To use the Factory Reset option (select products only), you must use HP Recovery media. If you have not already created recovery media, see Creating HP Recovery media (select products only) on page 89.

- If your computer does not allow the creation of HP Recovery media or if the HP Recovery media does not work, you can obtain recovery media for your system from support. See the *Worldwide Telephone Numbers* booklet included with the computer. You can also find contact information from the HP

website. Go to http://www.hp.com/support, select your country or region, and follow the on-screen instructions.

IMPORTANT: HP Recovery Manager does not automatically provide backups of your personal data. Before beginning recovery, back up any personal data you want to retain.

Using HP Recovery media, you can choose from one of the following recovery options:

NOTE: Only the options available for your computer display when you start the recovery process.

- System Recovery—Reinstalls the original operating system, and then configures the settings for the programs that were installed at the factory.
- Factory Reset—Restores the computer to its original factory state by deleting all information from the hard drive and re-creating the partitions. Then it reinstalls the operating system and the software that was installed at the factory.

The HP Recovery partition (select products only) allows System Recovery only.

Using the HP Recovery partition (select products only)

The HP Recovery partition allows you to perform a system recovery without the need for recovery discs or a recovery USB flash drive. This type of recovery can be used only if the hard drive is still working.

To start HP Recovery Manager from the HP Recovery partition:

IMPORTANT: For a tablet with a detachable keyboard, connect the keyboard to the keyboard dock before beginning these steps (select products only).

1. Type `recovery` in the taskbar search box, select **Recovery Manager**, and then select **HP Recovery Environment**.

   - or-

   For computers or tablets with keyboards attached, press f11 while the computer boots, or press and hold f11 as you press the power button.

   For tablets without keyboards:

   Turn on or restart the tablet, and then quickly hold down the volume up button; then select **f11**.

   - or -

   Turn on or restart the tablet, and then quickly hold down the volume down button; then select **f11**.

   - or -

   Turn on or restart the tablet, and then quickly hold down the Windows button; then select **f11**.
2. Select **Troubleshoot** from the boot options menu.
3. Select **Recovery Manager**, and then follow the on-screen instructions.

Using HP Recovery media to recover

You can use HP Recovery media to recover the original system. This method can be used if your system does not have an HP Recovery partition or if the hard drive is not working properly.

1. If possible, back up all personal files.
2. Insert the HP Recovery media, and then restart the computer.

   NOTE: If the computer does not automatically restart in HP Recovery Manager, change the computer boot order. See Changing the computer boot order on page 93.

3. Follow the on-screen instructions.

Changing the computer boot order

If your computer does not restart in HP Recovery Manager, you can change the computer boot order, which is the order of devices listed in BIOS where the computer looks for startup information. You can change the selection to an optical drive or a USB flash drive.

To change the boot order:

IMPORTANT: For a tablet with a detachable keyboard, connect the keyboard to the keyboard dock before beginning these steps.

1. Insert the HP Recovery media.
2. Access the system **Startup** menu.

   For computers or tablets with keyboards attached:

   ▲ Turn on or restart the computer or tablet, quickly press esc, and then press f9 for boot options.

   For tablets without keyboards:

   ▲ Turn on or restart the tablet, and then quickly hold down the volume up button; then select **f9**.

   - or -

   Turn on or restart the tablet, and then quickly hold down the volume down button; then select **f9**.

   - or -

   Turn on or restart the tablet, and then quickly hold down the Windows button; then select **f9**.
3. Select the optical drive or USB flash drive from which you want to boot.
4. Follow the on-screen instructions.

Removing the HP Recovery partition (select products only)

HP Recovery Manager software allows you to remove the HP Recovery partition to free up hard drive space.

IMPORTANT: After you remove the HP Recovery partition, you will not be able to perform System Recovery or create HP recovery media from the HP Recovery partition. So before you remove the Recovery partition, create HP Recovery media; see Creating HP Recovery media (select products only) on page 89.

NOTE: The Remove Recovery Partition option is only available on products that support this function.

Follow these steps to remove the HP Recovery partition:

1. Type `recovery` in the taskbar search box, and then select **HP Recovery Manager**.
2. Select **Remove Recovery Partition**, and then follow the on-screen instructions.

10 Specifications

Computer specifications

	Metric	U.S.
Dimensions		
Depth (non-touch)	239.0 mm	9.41 in
Depth (touch)	239.4 mm	9.43 in
Width (non-touch)	343.2 mm	13.51 in
Width (touch)	343.4 mm	13.32 in
Height (non-touch)	20.3 mm	0.80 in
Height (touch)	21.9 mm	0.86 in
Weight (1 DIMM, WLAN, webcam, no fingerprint reader, no WWAN)		
Non-touch, M.2 SSD,	1.64 kg	3.61 lbs
Non-touch, hard drive	1.74 kg	3.83 lbs
Touch, M.2 SSD,	1.99 kg	4.38 lbs
Touch, hard drive	2.09 kg	4.60 lbs
Input power		
Operating voltage	19.0 V dc @ 4.74 A – 90 W or 18.5 V dc @ 3.5 A - 65 W	
Operating current	4.74 A or 3.5 A	
Temperature		
Operating (not writing to optical disc)	0°C to 35°C	32°F to 95°F
Operating (writing to optical disc)	5°C to 35°C	41°F to 95°F
Nonoperating	-20°C to 60°C	-4°F to 140°F
Relative humidity		
Operating	10% to 90%	
Nonoperating	5% to 95%	
Maximum altitude (unpressurized)		
Operating (14.7 to 10.1 psia)	-15 m to 3,048 m	50 ft to 10,000 ft
Nonoperating (14.7 to 4.4 psia)	-15 m to 12,192 m	-50 ft to 40,000 ft
Shock		
Operating	125 g, 2 ms, half-sine	
Nonoperating	200 g, 2 ms, half-sine	
Random vibration		

	Metric	U.S.
Operating	0.75 g zero-to-peak, 10 Hz to 500 Hz, 0.25 oct/min sweep rate	
Nonoperating	1.50 g zero-to-peak, 10 Hz to 500 Hz, 0.5 oct/min sweep rate	

NOTE: Applicable product safety standards specify thermal limits for plastic surfaces. The computer operates well within this range of temperatures.

35.6-cm (14.0-in) display specifications

	Metric	U.S.
Active diagonal size	35.6-cm	14.0-in
Resolution	HD: 1366x768 FHD: 1920x1080	
Surface treatment	Anti-glare	
Panel Width	3.0 mm	
Brightness	220 nits	
Viewing angle	SVA	
Backlight	LED	
Aspect ratio	16:9	

Hard drive specifications

	1-TB*	500-GB*	500-GB* hybrid
Dimensions			
Height	7.0 mm	7.0 mm	7.0 mm
Width	70 mm	70 mm	70 mm
Weight	115 g	101 g or 95 g	95 g
Interface type	SATA	SATA	SATA
Transfer rate	100 MB/sec	100 MB/sec	100 MB/sec
Security	ATA security	ATA security	ATA security
Seek times (typical read, including setting)			
Single track	1.4 ms	3 ms	2 ms
Average	10 ms	13 ms	12 ms
Maximum	12 ms	24 ms	22 ms
Logical blocks	1,938,921,461	1,048,576,000	976,773,168
Disc rotational speed	5400 rpm	7200 rpm or 5400 rpm	5400 rpm
Operating temperature			
*1 GB = 1 billion bytes when referring to hard drive storage capacity. Actual accessible capacity is less. Actual drive specifications may differ slightly.			
NOTE: Certain restrictions and exclusions apply. Contact technical support for details.			

Solid-state drive specifications

	128-GB*	256-GB*
Height	1.35 mm	1.35 mm
Weight	< 10 g	< 10 g
Form factor	M.2 2280-D2-B-M	M.2 2280-D2-B-M
Transfer rate	up to 540 MB/sec	up to 540 MB/sec
Interface type	SATA-3	SATA-3
Ready time, maximum (to not busy)	1.0 ms	< 1.0 ms
Access times, logical	0.1 ms	0.1 ms
Total logical sectors	234,441,648	468,883,296
Operating temperature	0°C to 70°C (32°F to 158°F)	

*1 GB = 1 billion bytes when referring to hard drive storage capacity. Actual accessible capacity is less. Actual drive specifications may differ slightly.

NOTE: Certain restrictions and exclusions apply. Contact technical support for details.

11 Statement of memory volatility

The purpose of this chapter is to provide general information regarding nonvolatile memory in HP Business PCs. This chapter also provides general instructions for restoring nonvolatile memory that can contain personal data after the system has been powered off and the hard drive has been removed.

HP Business PC products that use Intel®-based or AMD®-based system boards contain volatile DDR memory. The amount of nonvolatile memory present in the system depends upon the system configuration. Intel-based and AMD-based system boards contain nonvolatile memory subcomponents as originally shipped from HP, assuming that no subsequent modifications have been made to the system and assuming that no applications, features, or functionality have been added to or installed on the system.

Following system shutdown and removal of all power sources from an HP Business PC system, personal data can remain on volatile system memory (DIMMs) for a finite period of time and will also remain in nonvolatile memory. Use the steps below to remove personal data from the PC, including the nonvolatile memory found in Intel-based and AMD-based system boards.

NOTE: If your tablet has a keyboard base, connect to the keyboard base before beginning steps in this chapter.

Current BIOS steps

1. Follow steps (a) through (l) below to restore the nonvolatile memory that can contain personal data. Restoring or reprogramming nonvolatile memory that does not store personal data is neither necessary nor recommended.

   a. Turn on or restart the computer, and then press esc while the “Press the ESC key for Startup Menu” message is displayed at the bottom of the screen.

   IMPORTANT: If the **Main** menu displays **Restore Defaults** instead of **Apply Factory Defaults and Exit**, go to Legacy BIOS Steps on page 100.

   NOTE: If the system has a BIOS administrator password, enter the password at the prompt.

   b. Select **Main**, select **Apply Factory Defaults and Exit**, and then select **Yes** to load defaults.

   The computer will reboot.

   c. During the reboot, press esc while the “Press the ESC key for Startup Menu” message is displayed at the bottom of the screen.

   NOTE: If the system has a BIOS administrator password, enter the password at the prompt.

   d. Select the **Security** menu, select **Restore Security Settings to Factory Defaults**, and then select **Yes** to restore security level defaults.

   The computer will reboot.

   e. During the reboot, press esc while the “Press the ESC key for Startup Menu” message is displayed at the bottom of the screen.

   NOTE: If the system has a BIOS administrator password, enter the password at the prompt.

   f. If an asset or ownership tag is set, select the **Security** menu and scroll down to the **Utilities** menu. Select **System IDs**, and then select **Asset Tracking Number**. Clear the tag, and then make the selection to return to the prior menu.

g. If a DriveLock password is set, select the **Security** menu, and scroll down to **Hard Drive Utilities** under the **Utilities** menu. Select **Hard Drive Utilities**, select **DriveLock**, then uncheck the checkbox for **DriveLock password on restart**. Select **OK** to proceed.

h. Select the **Main** menu, and then select **Reset BIOS Security to factory default**. Click **Yes** at the warning message.

   The computer will reboot.

i. During the reboot, press esc while the "Press the ESC key for Startup Menu" message is displayed at the bottom of the screen.

NOTE: If the system has a BIOS administrator password, enter the password at the prompt.

j. Select the **Main** menu, select **Apply Factory Defaults and Exit**, select **Yes** to save changes and exit, and then select **Shutdown**.

k. Reboot the system. If the system has a Trusted Platform Module (TPM) and/or fingerprint reader, one or two prompts will appear—one to clear the TPM and the other to Reset Fingerprint Sensor; press or tap F1 to accept or F2 to reject.

l. Remove all power and system batteries for at least 24 hours.

2. Complete one of the following:

   - Remove and retain the storage drive.

   – or –

   - Clear the drive contents by using a third party utility designed to erase data from an SSD.

   – or –

   - Clear the contents of the drive by using the following BIOS Setup Secure Erase command option steps:

IMPORTANT: If you clear data using Secure Erase, it cannot be recovered.

a. Turn on or restart the computer, and then press esc while the "Press the ESC key for Startup Menu" message is displayed at the bottom of the screen.

b. Select the **Security** menu and scroll down to the **Utilities** menu.

c. Select **Hard Drive Tools**.

d. Under **Utilities**, select **Secure Erase**, select the hard drive storing the data you want to clear, and then follow the on-screen instructions to continue.

Legacy BIOS Steps

Use the steps for older versions of BIOS.

NOTE: If you already completed the steps in Current BIOS steps on page 99, skip this section.

1. Follow steps (a) through (i) below to restore the nonvolatile memory that can contain personal data. Restoring or reprogramming nonvolatile memory that does not store personal data is neither necessary nor recommended.

NOTE: If you have not already done so, access the BIOS menu.

- Turn on or restart the computer, and then press esc while the "Press the ESC key for Startup Menu" message is displayed at the bottom of the screen.

NOTE: If the system has a BIOS administrator password, enter the password at the prompt.

a. Select **Main**, select **Restore Defaults**, and then select **Yes** to load defaults.

b. Select the **Security** menu, select **Restore Security Level Defaults**, and then select **Yes** to restore security level defaults.

c. If an asset or ownership tag is set, select the **Security** menu and scroll down to the **Utilities** menu. Select **System IDs**, and then select **Asset Tracking Number**. Clear the tag, and then make the selection to return to the prior menu.

d. If a DriveLock password is set, select the **Security** menu, and scroll down to **Hard Drive Tools** under the **Utilities** menu. Select **Hard Drive Tools**, select **DriveLock**, then uncheck the checkbox for **DriveLock password on restart**. Select **OK** to proceed.

e. If an Automatic DriveLock password is set, select the **Security** menu, scroll down to **Hard Drive Tools** under the **Utilities** menu. Select **Hard Drive Tools**, scroll down to **Automatic DriveLock**, then select the desired hard drive and disable protection. At the automatic drive lock warning screen, select **Yes** to continue. Repeat this procedure if more than one hard drive has an Automatic DriveLock password.

f. Select the **Main** menu, and then select **Reset BIOS Security to factory default**. Click **Yes** at the warning message.

g. Select the **Main** menu, select **Save Changes and Exit**, select **Yes** to save changes and exit, and then select **Shutdown**.

h. Reboot the system. If the system has a Trusted Platform Module (TPM) and/or fingerprint reader, one or two prompts will appear—one to clear the TPM and the other to Reset Fingerprint Sensor; press or tap F1 to accept or F2 to reject.

i. Remove all power and system batteries for at least 24 hours.

2. Complete one of the following:

- Remove and retain the storage drive.

– or –

- Clear the drive contents by using a third party utility designed to erase data from an SSD.

– or –

- Clear the contents of the drive by using the following BIOS Setup Secure Erase command option steps:

IMPORTANT: If you clear data using Secure Erase, it cannot be recovered.

a. Turn on or restart the computer, and then press esc while the “Press the ESC key for Startup Menu” message is displayed at the bottom of the screen.

b. Select the **Security** menu and scroll down to the **Utilities** menu.

c. Select **Hard Drive Tools**.

d. Under **Utilities**, select **Secure Erase**, select the hard drive storing the data you want to clear, and then follow the on-screen instructions to continue.

– or –

- Clear the contents of the drive by using the following Disk Sanitizer command steps:

IMPORTANT: If you clear data using Disk Sanitizer, it cannot be recovered.

NOTE: The amount of time it takes for Disk Sanitizer to run can take several hours. Plug the computer into an AC outlet before starting.

a. Turn on or restart the computer, and then press esc while the “Press the ESC key for Startup Menu” message is displayed at the bottom of the screen.

b. Select the **Security** menu and scroll down to the **Utilities** menu.

c. Select **Hard Drive Tools**.

d. Under **Utilities**, select **Disk Sanitizer**, select the hard drive storing the data you want to clear, and then follow the on-screen instructions to continue.

Nonvolatile memory usage

Nonvolatile Memory Type	Amount (Size)	Does this memory store customer data?	Does this memory retain data when power is removed?	What is the purpose of this memory?	How is data input into this memory?	How is this memory write-protected?
HP Sure Start flash (select models only)	2 MBytes	No	Yes	Provides protected backup of critical System BIOS code, EC firmware, and critical PC configuration data for select platforms that support HP Sure Start. For more information, see Using HP Sure Start (select models only) on page 105.	Data cannot be written to this device via the host processor. The content is managed solely by the HP Sure Start Embedded Controller.	This memory is protected by the HP Sure Start Embedded Controller.
Real Time Clock (RTC) battery backed-up CMOS configuration memory	256 Bytes	No	Yes	Stores system date and time and noncritical data.	RTC battery backed-up CMOS is programmed using the Computer Setup (BIOS), or changing the Microsoft Windows date & time.	This memory is not write-protected.
Controller (NIC) EEPROM	64 KBytes (not customer accessible)	No	Yes	Stores NIC configuration and NIC firmware.	NIC EEPROM is programmed using a utility from the NIC vendor that can be run from DOS.	A utility is required to write data to this memory and is available from the NIC vendor. Writing data to this ROM in an inappropriate manner will render the NIC non-functional.
DIMM Serial Presence Detect (SPD) configuration data	256 Bytes per memory module, 128 Bytes programmable	No	Yes	Stores memory module information.	DIMM SPD is programmed by the memory vendor.	Data cannot be written to this memory when the module is installed in a PC. The specific write-protection method varies by memory vendor.

Nonvolatile Memory Type	Amount (Size)	Does this memory store customer data?	Does this memory retain data when power is removed?	What is the purpose of this memory?	How is data input into this memory?	How is this memory write-protected?
	(not customer accessible)					
System BIOS	4 MBytes to 5 MBytes	Yes	Yes	Stores system BIOS code and PC configuration data.	System BIOS code is programmed at the factory. Code is updated when the system BIOS is updated. Configuration data and settings are input using the Computer Setup (BIOS) or a custom utility.	**NOTE:** Writing data to this ROM in an inappropriate manner can render the PC non-functional. A utility is required for writing data to this memory and is available on the HP website; go to http://www.hp.com/support. Select **Find your product**, and then follow the on-screen instructions.
Intel Management Engine Firmware (present in only specific ZBook and EliteBook models. For more information, go to http://www.hp.com/support. Select **Find your product**, and then follow the on-screen instructions.)	1.5 MBytes or 5 MBytes	Yes	Yes	Stores Management Engine Code, Settings, Provisioning Data and iAMT third-party data store.	Management Engine Code is programmed at the factory. Code is updated via Intel secure firmware update utility. Unique Provisioning Data can be entered at the factory or by an administrator using the Management Engine (MEBx) setup utility. The third party data store contents can be populated by a remote management console or local applications that have been registered by an administrator to have access to the space.	The Intel chipset is configured to enforce hardware protection to block all direct read/write access to this area. An Intel utility is required for updating the firmware. Only firmware updates digitally signed by Intel can be applied using this utility.
Bluetooth flash	2 Mbit	No	Yes	Stores Bluetooth configuration and firmware.	Bluetooth flash is programmed at the factory. Tools for writing data to this memory are not publicly available but can be obtained from the silicon vendor.	A utility is required for writing data to this memory and is made available through newer versions of the driver whenever the flash requires an upgrade.
802.11 WLAN EEPROM	4 Kbit to 8 Kbit	No	Yes	Stores configuration and calibration data.	802.11 WLAN EEPROM is programmed at the factory. Tools for writing data to this memory are not made public.	A utility is required for writing data to this memory and is typically not made available to the public unless a firmware upgrade is necessary to address a unique issue.
Web camera	64 Kbit	No	Yes	Stores webcam configuration and firmware.	Webcam memory is programmed using a utility from the device manufacturer that can be run from Windows.	A utility is required for writing data to this memory and is typically not made available to the public unless a firmware

Nonvolatile Memory Type	Amount (Size)	Does this memory store customer data?	Does this memory retain data when power is removed?	What is the purpose of this memory?	How is data input into this memory?	How is this memory write-protected?
						upgrade is necessary to address a unique issue.
Fingerprint reader	512 KByte flash	Yes	Yes	Stores fingerprint templates.	Fingerprint reader memory is programmed by user enrollment in HP ProtectTools Security Manager.	Only a digitally signed application can make the call to write to the flash.

Questions and answers

1. **How can the BIOS settings be restored (returned to factory settings)?**

IMPORTANT: Restore defaults does not securely erase any data on your hard drive. See question and answer 6 for steps to securely erase data.

Restore defaults does not reset the Custom Secure Boot keys. See question and answer 7 for information about resetting the keys.

   a. Turn on or restart the computer, and then press esc while the “Press the ESC key for Startup Menu” message is displayed at the bottom of the screen.

   b. Select **Main**, and then select **Restore defaults**.

   c. Follow the on-screen instructions.

   d. Select **Main**, select **Save Changes and Exit**, and then follow the on-screen instructions.

2. **What is a UEFI BIOS, and how is it different from a legacy BIOS?**

   The Unified Extensible Firmware Interface (UEFI) BIOS is an industry-standard software interface between the platform firmware and an operating system (OS). It is a replacement for the older BIOS architecture, but supports much of the legacy BIOS functionality.

   Like the legacy BIOS, the UEFI BIOS provides an interface to display the system information and configuration settings and to change the configuration of your computer before an OS is loaded. BIOS provides a secure run-time environment that supports a Graphic User Interface (GUI). In this environment, you can use either a pointing device (Touchscreen, TouchPad, pointing stick, or USB mouse) or the keyboard to navigate and make menu and configuration selections. The UEFI BIOS also contains basic system diagnostics.

   The UEFI BIOS provides functionality beyond that of the legacy BIOS. In addition, the UEFI BIOS works to initialize the computer’s hardware before loading and executing the OS; the run-time environment allows the loading and execution of software programs from storage devices to provide more functionality, such as advanced hardware diagnostics (with the ability to display more detailed system information) and advanced firmware management and recovery software.

   HP has provided options in Computer Setup (BIOS) to allow you to run in legacy BIOS, if required by the operating system. Examples of this requirement would be if you upgrade or downgrade the OS.

3. **Where does the UEFI BIOS reside?**

   The UEFI BIOS resides on a flash memory chip. A utility is required to write to the chip.

4. **What kind of configuration data is stored on the DIMM Serial Presence Detect (SPD) memory module? How would this data be written?**

   The DIMM SPD memory contains information about the memory module, such as size, serial number, data width, speed/timing, voltage, and thermal information. This information is written by the module manufacturer and stored on an EEPROM. This EEPROM cannot be written to when the memory module is installed in a PC. Third-party tools do exist that can write to the EEPROM when the memory module is not installed in a PC. Various third-party tools are available to read SPD memory.

5. **What is meant by "Restore the nonvolatile memory found in Intel-based system boards"?**

   This message relates to clearing the Real Time Clock (RTC) CMOS memory that contains PC configuration data.

6. **How can the BIOS security be reset to factory defaults and data erased?**

   IMPORTANT: Resetting will result in the loss of information.

   These steps will not reset Custom Secure Boot Keys. See question and answer 7 for information about resetting the keys.

   a. Turn on or restart the computer, and then press esc while the "Press the ESC key for Startup Menu" message is displayed at the bottom of the screen.

   b. Select **Main**, and then select **Reset BIOS Security to Factory Default**.

   c. Follow the on-screen instructions.

   d. Select **Main**, select **Save Changes and Exit**, and then follow the on-screen instructions.

7. **How can the Custom Secure Boot Keys be reset?**

   Secure Boot is a feature to ensure that only authenticated code can start on a platform. If you enabled Secure Boot and created Custom Secure Boot Keys, simply disabling Secure Boot will not clear the keys. You must also select to clear the Custom Secure Boot Keys. Use the same Secure Boot access procedure you used to create the Custom Secure Boot Keys, but make the selection to clear or delete all Secure Boot Keys.

   a. Turn on or restart the computer, and then press esc while the "Press the ESC key for Startup Menu" message is displayed at the bottom of the screen.

   b. Select the **Security** menu, select **Secure Boot Configuration**, and then follow the on-screen instructions.

   c. At the **Secure Boot Configuration** window, select **Secure Boot**, select **Clear Secure Boot Keys**, and then follow the on-screen instructions to continue.

Using HP Sure Start (select models only)

Select computer models are configured with HP Sure Start, a technology that continuously monitors your computer's BIOS for attacks or corruption. If the BIOS becomes corrupted or is attacked, HP Sure Start restores the BIOS to its previously safe state, without user intervention. Those select computer models ship with HP Sure Start configured and enabled. HP Sure Start is configured and already enabled so that most users can use the HP Sure Start default configuration. The default configuration can be customized by advanced users.

To access the latest documentation on HP Sure Start, go to http://www.hp.com/support. Select **Find your product**, and then follow the on-screen instructions.

12 Power cord set requirements

The wide-range input feature of the computer permits it to operate from any line voltage from 100 to 120 volts ac, or from 220 to 240 volts ac.

The 3-conductor power cord set included with the computer meets the requirements for use in the country or region where the equipment is purchased.

Power cord sets for use in other countries and regions must meet the requirements of the country or region where the computer is used.

Requirements for all countries and regions

The following requirements are applicable to all countries and regions:

- The length of the power cord set must be at least **1.5 m** (5.0 ft) and no more than **2.0 m** (6.5 ft).
- All power cord sets must be approved by an acceptable accredited agency responsible for evaluation in the country or region where the power cord set will be used.
- The power cord sets must have a minimum current capacity of 10 A and a nominal voltage rating of 125 or 250 V ac, as required by the power system of each country or region.
- The appliance coupler must meet the mechanical configuration of an EN 60 320/IEC 320 Standard Sheet C13 connector for mating with the appliance inlet on the back of the computer.

Requirements for specific countries and regions

Country/region	Accredited agency	Applicable note number
Argentina	IRAM	1
Australia	SAA	1
Austria	OVE	1
Belgium	CEBEC	1
Brazil	ABNT	1
Canada	CSA	2
Chile	IMQ	1
Denmark	DEMKO	1
Finland	FIMKO	1
France	UTE	1
Germany	VDE	1
India	ISI	1
Israel	SII	1
Italy	IMQ	1

Country/region	Accredited agency	Applicable note number
Japan	JIS	3
The Netherlands	KEMA	1
New Zealand	SANZ	1
Norway	NEMKO	1
The People's Republic of China	CCC	4
Saudi Arabia	SASO	7
Singapore	PSB	1
South Africa	SABS	1
South Korea	KTL	5
Sweden	SEMKO	1
Switzerland	SEV	1
Taiwan	BSMI	6
Thailand	TISI	1
The United Kingdom	ASTA	1
The United States	UL	2

1. The flexible cord must be Type H05VV-F, 3-conductor, 0.75mm2 conductor size. Power cord set fittings (appliance coupler and wall plug) must bear the certification mark of the agency responsible for evaluation in the country or region where it will be used.
2. The flexible cord must be Type SVT/SJT or equivalent, No. 18 AWG, 3-conductor. The wall plug must be a two-pole grounding type with a NEMA 5-15P (15 A, 125 V ac) or NEMA 6-15P (15 A, 250 V ac) configuration. CSA or C-UL mark. UL file number must be on each element.
3. The appliance coupler, flexible cord, and wall plug must bear a “T” mark and registration number in accordance with the Japanese Dentori Law. The flexible cord must be Type VCTF, 3-conductor, 0.75mm2 or 1.25mm2 conductor size. The wall plug must be a two-pole grounding type with a Japanese Industrial Standard C8303 (7 A, 125 V ac) configuration.
4. The flexible cord must be Type RVV, 3-conductor, 0.75mm2 conductor size. Power cord set fittings (appliance coupler and wall plug) must bear the CCC certification mark.
5. The flexible cord must be Type H05VV-F 3X0.75mm2 conductor size. KTL logo and individual approval number must be on each element. Corset approval number and logo must be printed on a flag label.
6. The flexible cord must be Type HVCTF 3X1.25mm2 conductor size. Power cord set fittings (appliance coupler, cable, and wall plug) must bear the BSMI certification mark.
7. For 127 V ac, the flexible cord must be Type SVT or SJT 3 x 18 AWG, with plug NEMA 5-15P (15 A, 125 V ac), with UL and CSA or C-UL marks. For 240 V ac, the flexible cord must be Type H05VV-F 3X0.75/1.00mm2 conductor size, with plug BS 1363/A with BSI or ASTA marks.

13 Recycling

When a non-rechargeable or rechargeable battery has reached the end of its useful life, do not dispose of the battery in general household waste. Follow the local laws and regulations in your area for battery disposal.

HP encourages customers to recycle used electronic hardware, HP original print cartridges, and rechargeable batteries. For more information about recycling programs, see the HP Web site at http://www.hp.com/recycle.

Index

A

AC adapter, spare part numbers 24
antennas
  disconnecting 38
audio, product description 2
audio-out (headphone)/audio-in (microphone) combo jack, identifying 7

B

backups 89
base enclosure, spare part number 18
battery
  removing 62
  spare part number 18, 62
BIOS
  determining version 84
  downloading an update 85
  updating 84
Bluetooth card
  spare part number 38
Bluetooth label 15
boot order
  changing 93
bottom 15
buttons
  left TouchPad 9
  power 11
  right TouchPad 9

C

Cable Kit
  contents 19
  spare part number 19
cables, service considerations 27
caps lock light, identifying 10
components
  bottom 14
  display 8
  left side 7
  right side 6
  top 9
Computer Setup
  navigating and selecting 83
  restoring factory settings 83
computer specifications 95
connector, power 6
connectors, service considerations 27

D

diskette drive
  precautions 27
display assembly
  removal 46, 75
  spare part numbers 20, 75
display bezel
  removing 47
  spare part numbers 20
Display Hinge Kit
  spare part numbers 21
display panel
  product description 1
  removing 48
display rear cover
  spare part number 21
display specifications 96
drive light, identifying 7
drives
  preventing damage 27

E

electrostatic discharge 28
esc key, identifying 12
Ethernet, product description 3
external media cards, product description 3
external monitor port 6

F

fan
  removing 66
  spare part number 17
fingerprint reader assembly
  removal 53
  spare part number 17, 53
fingerprint reader, identifying 11
fn key, identifying 12
function board
  removal 57
  spare part number 17, 57

G

graphics, product description 1
grounding equipment and methods 30

H

hard drive
  identifying 14
  precautions 27
  product description 2
  removing 34
  spare part numbers 18, 23, 34
  specifications 97
Hard Drive Hardware Kit
  spare part number 18, 23, 32, 34
HDMI port, identifying 6
heat sink
  removal 72
  spare part number 17, 72
hinge cover
  spare part number 20
hinges
  removing 48
hot keys
  microphone mute 13
  using 13
HP PC Hardware Diagnostics (UEFI)
  using 87
HP Recovery Manager
  correcting boot problems 93
  starting 92
HP Recovery media
  creating 89
  recovery 92
HP Recovery partition
  recovery 92
  removing 94
HP Sure Start 105

I
integrated webcam light, identifying 8
internal microphones, identifying 8

J
jacks
audio-out (headphone)/audio-in (microphone) combo 7
network 6
RJ-45 (network) 6

K
keyboard
product description 3
removal 43
spare part numbers 17, 43
keypad
Windows application key 12
keys
esc 12
fn 12
Windows key 12

L
labels
Bluetooth 15
regulatory 15
serial number 15
service 15
wireless certification 15
WLAN 15
legacy support, USB 83
lights
caps lock 10
hard drive 7
microphone mute 10
num lock 10
power 10
RJ-45 (network) 6
webcam 8
wireless 10

M
mass storage devices, spare part numbers 23
memory
nonvolatile 99
volatile 99
memory card reader, identifying 7
memory module
identifying 14
product description 2
removal 36
spare part numbers 18, 36
microphone (audio-in) jack
product description 2
microphone mute key, identifying 13
microphone mute light, identifying 10
mini card
product description 2
minimized image recovery 92
minimized image, creating 91
model name 1

N
network jack, identifying 6
nonvolatile memory 99
num lock light 10

O
operating system, product description 4
optical drive
precautions 27
original system recovery 91

P
packing guidelines 29
plastic parts 26
Plastics Kit
contents 22
spare part number 22
pointing device, product description 3
ports
external monitor 6
HDMI 6
product description 3
USB Type-C charging 6
power button board
removal 55
spare part number 17, 55
power button, identifying 11
power cable
removal 82
spare part number 18, 82
power connector, identifying 6
power cord
set requirements 106
spare part numbers 24, 25
power lights 10
power requirements, product description 4
processor
product description 1
product description
audio 2
display panel 1
Ethernet 3
external media cards 3
graphics 1
hard drives 2
keyboard 3
memory module 2
microphone 2
mini card 2
operating system 4
pointing devices 3
ports 3
power requirements 4
processors 1
product name 1
security 4
serviceability 5
webcam 2
wireless 3
product name 1
product name and number, computer 15

R
recover
options 91
recovery
discs 90, 92
HP Recovery Manager 91
media 92
starting 92
supported discs 90
system 91
USB flash drive 92
using HP Recovery media 90
recovery media
creating 89
creating using HP Recovery Manager 90

recovery partition
removing 94
regulatory information
regulatory label 15
wireless certification labels 15
removal/replacement
preliminaries 26
procedures, Authorized Service Provider 46
procedures, Customer Self-Repair 31
removing personal data from volatile system memory 99
RJ-45 (network) jack, identifying 6
RJ-45 (network) lights, identifying 6
RTC battery
removal 71
spare part number 18, 71

S
Screw Kit, spare part number 25
security cable slot, identifying 7
security, product description 4
serial number 15
service considerations 26
service doors
removing 32
spare part number 32
service labels, locating 15
serviceability, product description 5
setup utility
navigating and selecting 83
restoring factory settings 83
SIM card slot, identifying 14
SIM hinged connector, identifying 14
slots
security cable 7
SIM card 14
solid-state drive
removal 42
spare part numbers 18, 23, 42
specifications 98
speaker assembly
removal 59
spare part number 17, 59
speakers, identifying 11
specifications
computer 95
display 96
hard drive 97
solid-state drive 98
static-shielding materials 30
supported discs, recovery 90
Sure Start
using 86
system board
removal 68
spare part numbers 17, 68
system memory, removing personal data from volatile 99
system recovery 91
system restore point
creating 90
system restore point, creating 89

T
thermal material, replacement 73, 74
tools required 26
top cover
removal 50
spare part number 17, 50
TouchPad
buttons 9
TouchPad assembly
removal 60
spare part number 60
TouchPad zone
identifying 9
TPM settings 86
transporting guidelines 29
traveling with the computer 15

U
USB 3.0 port 6
USB legacy support 83
USB ports, identifying 6
USB Type-C charging port, identifying 6
USB/audio board
removal 64
spare part number 17, 64

V
vents, identifying 7, 14

W
webcam 8
product description 2
webcam light, identifying 8
webcam module
removal 78
spare part number 20
webcam, identifying 8
webcam/microphone cable
removing 48
webcam/microphone module
removing 47
Windows
system restore point 89, 90
Windows application key, identifying 12
Windows key, identifying 12
Windows tools
using 90
wireless antennas
disconnecting 38
wireless antennas, identifying 8
wireless certification label 15
wireless light 10
wireless, product description 3
WLAN antennas, identifying 8
WLAN device 15
WLAN label 15
WLAN/Bluetooth combo card
removal 38
spare part number 17, 38
workstation guidelines 29
WWAN antennas, identifying 8
WWAN module
removal 40
spare part numbers 40