HP Z240 Workstation

Maintenance and Service Guide

Copyright Information

© Copyright 2015 HP Development Company, L.P.

First Edition: October 2015

Part number: 819475-001

Warranty

The information contained herein is subject to change without notice. The only warranties for HP products and services are set forth in the express warranty statements accompanying such products and services. Nothing herein should be construed as constituting an additional warranty. HP shall not be liable for technical or editorial errors or omissions contained herein.

Not all features are available in all editions of Windows. This computer may require upgraded and/or separately purchased hardware, drivers, and/or software to take full advantage of Windows functionality. See http://www.microsoft.com for details.

Trademark Credits

ENERGY STAR is a registered trademark owned by the U.S. Environmental Protection Agency (EPA).

Intel, Core, Pentium, and Xeon are trademarks are trademarks of Intel Corporation in the U.S. and other countries.

Windows is a U.S. registered trademark of Microsoft Corporation.

NVIDIA and the NVIDIA logo are trademarks and/or registered trademarks of NVIDIA Corporation in the U.S. and other countries.

About this guide

This guide provides service and maintenance information, technical details, and configuration guidance for your workstations.

IMPORTANT: **Removal and replacement procedures are now available in videos on the HP website.**

Go to http://www.hp.com/go/sml.

Guide topics
Hardware overview on page 1
System management on page 16
Component replacement information and guidelines on page 41
Diagnostics and troubleshooting on page 60
Configuring password security and resetting CMOS on page 82
Configuring RAID devices on page 88
System board designators on page 92

NOTE: View the *HP Workstation User Guide* for your workstation at http://www.hp.com/support/workstation_manuals.

Table of contents

1 Hardware overview 1

HP Z240 SFF Workstation components 2

HP Z240 SFF Workstation front panel 2

HP Z240 SFF Workstation rear panel 3

Chassis components 4

System board components 5

System board architecture 6

Workstation specifications 7

HP Z240 Tower Workstation components 8

HP Z240 Tower Workstation front panel 8

HP Z240 Tower Workstation rear panel 9

Chassis components 10

System board components 11

System board architecture 12

Workstation specifications 13

Product specifications 14

Workstation weights and dimensions 14

Environmental specifications 14

Ensuring proper ventilation 15

2 System management 16

Power management and performance features 16

ERP compliance mode 16

Hyper-Threading Technology (HTT) 17

SATA Power Management 17

Intel Turbo Boost Technology 17

Non-Uniform Memory Access (NUMA) 17

BIOS ROM 17

Computer Setup (F10) Utilities 18

Using Computer Setup (F10) Utilities 18

Computer Setup–Main 20

Computer Setup—Security 22

Computer Setup—Advanced 24

Desktop management 29

Initial computer configuration and deployment 30

Installing a remote system 30

Copying a setup configuration to another computer 30
Updating and managing software 31
HP Client Management Solutions 31
Altiris Client Management Solutions 31
HP SoftPaq Download Manager 32
System Software Manager 32
ROM Flash 32
Remote ROM Flash 32
HPQFlash 32
FailSafe Boot Block 32
Recovering the computer by using FailSafe Boot Block recovery mode 33
Workstation security 33
Asset tracking 33
SATA hard drive security 34
DriveLock applications 34
Using DriveLock 35
Password security 36
Establishing an administrator password using Computer Setup (F10) Utility 36
Establishing a power-on password using Computer Setup (F10) Utility 37
Entering a power-on password 37
Entering an administrator password 38
National keyboard delimiter characters 38
Clearing passwords 38
Chassis security 39
Smart Cover Sensor (optional) 39
Side access panel solenoid lock 39
Cable lock (optional) 39
Fault notification and recovery 39
ECC fault prediction 40
Thermal sensors 40
Programmable power button (Windows only) 40
Changing the power button configuration (Windows only) 40

3 Component replacement information and guidelines 41
Warnings and cautions 42
Service considerations 42
Tools and software requirements 42
Electrostatic discharge (ESD) information 43
Product recycling 44
Component replacement guidelines 44

Battery 45
Cable management 45
CPU (processor) and CPU heatsink 46
Expansion slots 47
Card configuration restrictions for power supplies 47
Choosing an expansion card slot 47
SFF workstation slot identification and description 48
SFF workstation installation sequence recommendations 49
Tower workstation slot identification and description 50
Tower workstation installation sequence recommendations 51
Hard drives and optical disc drives 51
Handling hard drives 51
Removal and replacement tips 52
Drive installation and cabling scenarios 52
SFF workstations—SATA cable connection guidelines 52
Tower workstations—SATA cable connection guidelines 52
Memory 53
Supported DIMM configurations 53
BIOS errors and warnings 53
DIMM installation guidelines 53
SFF workstation DIMM installation order 54
Tower workstation DIMM installation order 55
Power supply 56
Power supply specifications 56
Power consumption and heat dissipation 57
Resetting the power supply 57
System board 57
System cabling 58
SFF workstation system cabling 58
Tower workstation system cabling 59

4 Diagnostics and troubleshooting 60
Calling support 60
Locating ID labels 61
Locating warranty information 61
Diagnosis guidelines 61
Diagnosis at startup 61
Diagnosis during operation 62
Troubleshooting checklist 62
HP troubleshooting resources and tools 63
Online support 63

HP Support Center 63
HP Chat Support 63
Customer Advisories, Customer and Security Bulletins, and Customer Notices 63
Product Change Notifications 64
Helpful hints 64
At startup 64
During operation 64
Customer Self Repair 65
Troubleshooting scenarios and solutions 66
Solving minor problems 66
Solving hard drive problems 67
Solving display problems 69
Solving audio problems 71
Solving printer problems 72
Solving power supply problems 72
Testing power supply 72
Using HP PC Hardware Diagnostics (UEFI) 73
Downloading HP PC Hardware Diagnostics (UEFI) to a USB device 74
POST error messages and diagnostic front panel LEDs and audible codes 74
POST numeric codes and text messages 75
Interpreting system validation diagnostic front panel LEDs and audible codes 80

5 Configuring password security and resetting CMOS 82
Preparing to configure passwords 82
Resetting the password jumper 82
Clearing and resetting the BIOS 83

Appendix A Linux technical notes 85
System RAM 85
Audio 85
Network cards 86
Hyper-Threading Technology 86
NVIDIA Graphics Workstations 86
AMD Graphics Workstations 87

Appendix B Configuring RAID devices 88
RAID hard drive maximum and associated storage controller options 88
Supported RAID configurations 89
Configuring Intel SATA RAID 89
Configuring system BIOS 89

Configuring RAID with the Intel utility 90
Software RAID solution 90
Software RAID considerations 90
Performance considerations 91
Configuring software RAID 91

Appendix C System board designators 92
SFF workstation system board designators 92
Tower workstation system board designators 93

Index 95

1 Hardware overview

This chapter presents an overview of workstation hardware components.

Topics
HP Z240 SFF Workstation components on page 2
HP Z240 Tower Workstation components on page 8
Product specifications on page 14
Ensuring proper ventilation on page 15

HP Z240 SFF Workstation components

This section describes the HP Z240 Small Form Factor (SFF) Workstation components.

For complete and current information on supported accessories and components for the computer, see http://partsurfer.hp.com.

HP Z240 SFF Workstation front panel

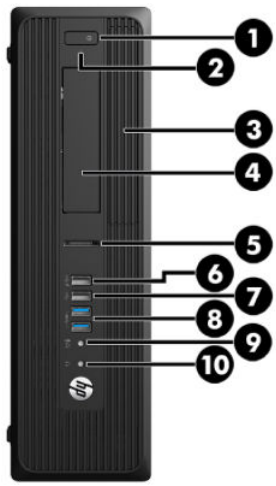

1		Power button	**6**		USB 2.0 port, charging (1, black)
2		HDD LED	**7**		USB 2.0 port (1, black)
3		Optional optical disc drive (not shown)	**8**		USB 3.0 ports (2) (blue)
4		Optional hard disk drive (not shown)	**9**		Microphone or headphones connector (software selectable, default mode is microphone)
5		Optional media card reader (shown)	**10**		Headphones connector

HP Z240 SFF Workstation rear panel

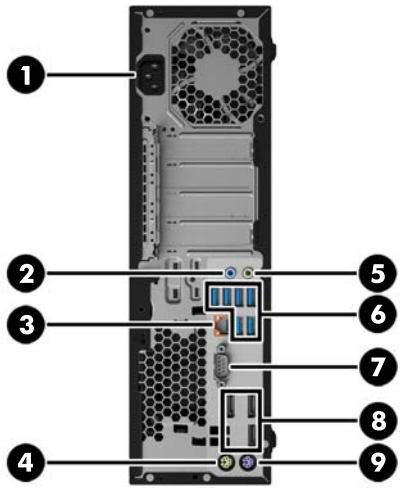

1		Power cord connector	6		USB 3.0 ports (6) (blue)
2		Audio line-in connector (blue)	7		Serial port
3		RJ–45 network connector	8		DisplayPort (DP) (3)
4		PS/2 mouse connector (green)	9		PS/2 keyboard connector (purple)
5		Audio line-out connector (green)			

NOTE: The labels for the rear panel connectors use industry-standard icons and colors.

NOTE: The DP ports are not supported when the system is configured with Intel® Xeon E3-12x0 v5 processors. For all other processors, these DP ports are disabled by default when a discrete graphics card is installed.

NOTE: Simultaneous usage of integrated Intel HD graphics and discrete graphics cards (in order to drive more than three displays) can be enabled using the Computer (F10) Setup Utility. However, HP recommends using only discrete graphics cards when attaching four or more displays.

Chassis components

For complete and current information on supported accessories and components for the computer, go to http://partsurfer.hp.com.

The following image shows the components of a typical SFF computer layout. Drive configurations can vary.

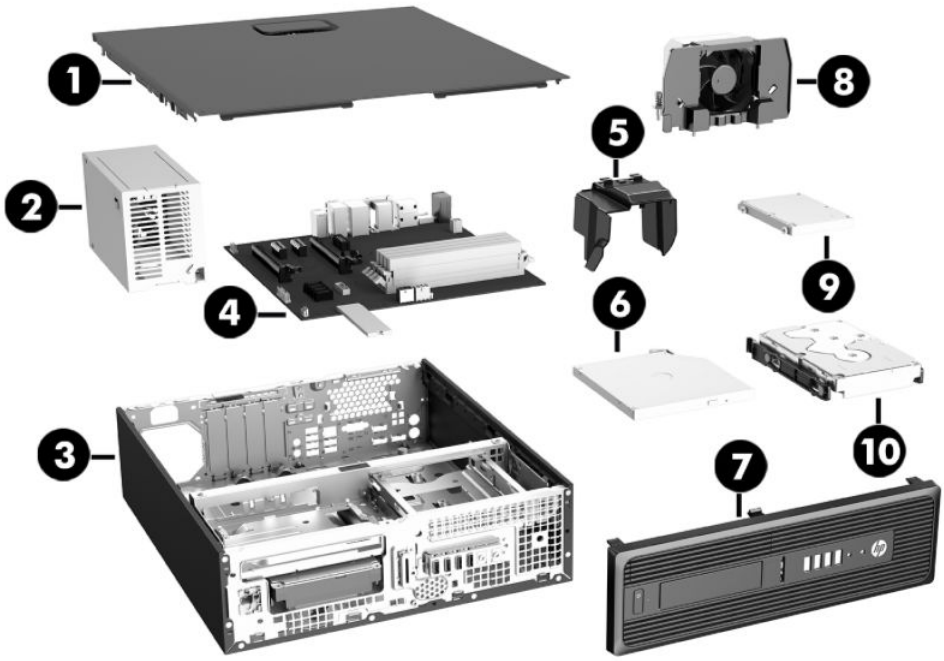

Item	Description	Item	Description
1	Access panel	6	Slim optical drive
2	Power supply	7	Front bezel
3	Chassis	8	Airflow guide
4	System board	9	Optional memory card reader or second hard drive
5	Fan baffle	10	Hard drive

System board components

The following illustration and table identify the system board components for the SFF workstation.

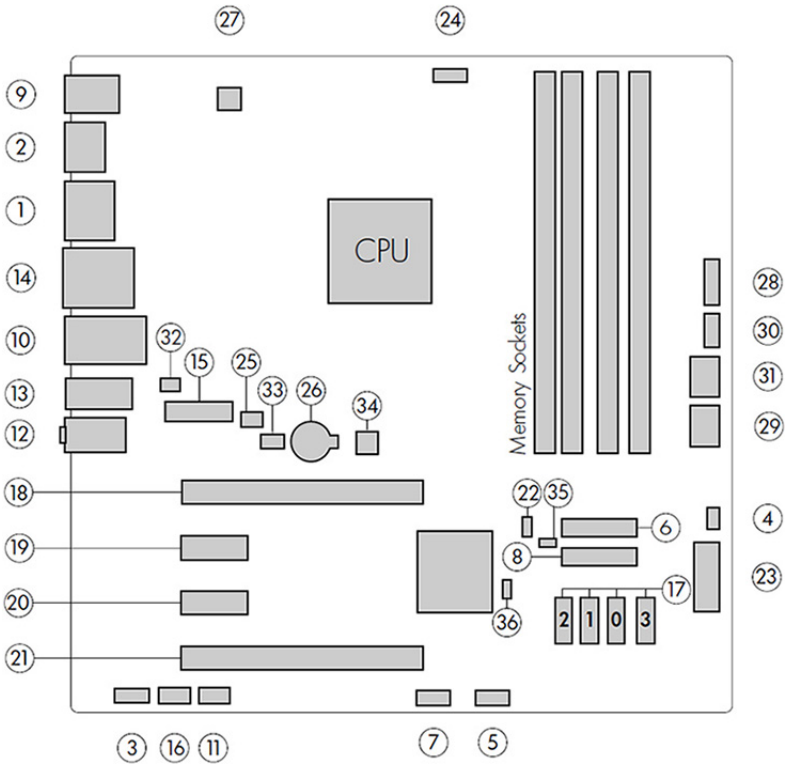

	I/O		SATA		Power
1	Dual-Mode DisplayPort	16	USB 3.1 (option)	26	Battery
2	DisplayPort		**SATA**	27	Processor power
3	Front audio	17	AHCI 6Gb/s	28	Front power button/LED
4	Front speaker		**PCI/PCIe**	29	Main power
5	Front USB 2.0	18	PCIe3 x16	30	Power COMM
6	Front USB 3.0	19	PCIe3 x1	31	SATA power
7	Internal USB 2.0	20	PCIe3 x1		**Security**
8	Internal USB 3.0	21	PCIe3 x16 (4)	32	Chassis solenoid lock
9	Keyboard / mouse	22	Z turbo drive LED (E19)	33	Hood sensor
10	Network / rear USB 3.0	**NOTE:** For related expansion card slot information, see Expansion slots on page 47			**Service**
11	Thunderbolt (option)		**M.2**	34	Clear CMOS button
12	Rear audio	23	PCIe3 x4	35	ME/AMT flash override
13	Rear USB 3.0		**Cooling**	36	Password jumper
14	Serial	24	Processor fan		
15	Serial (option)	25	Rear fan		

System board architecture

The following figure shows the typical system board block diagram.

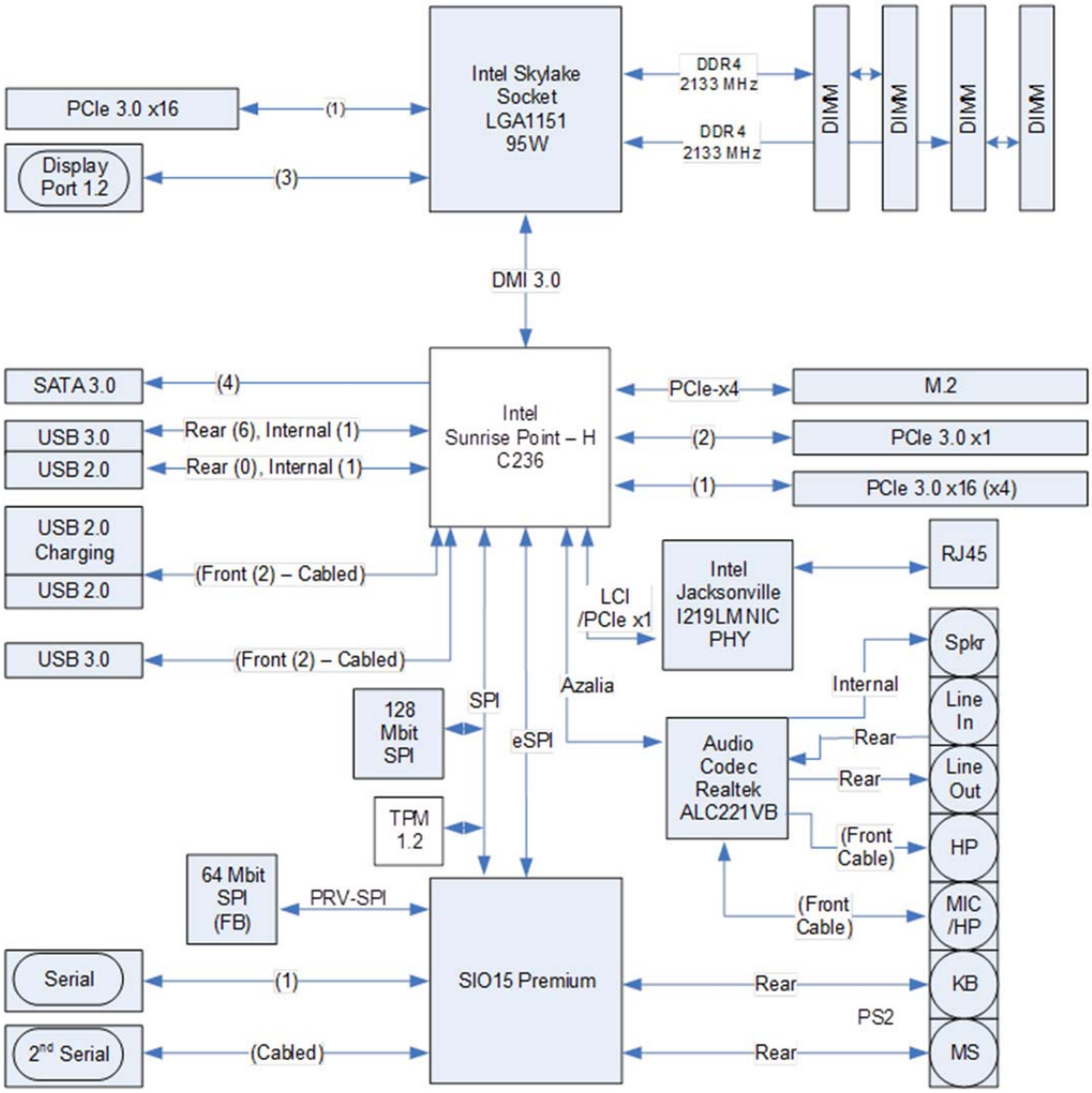

NOTE: The PCIe designators indicate the mechanical connector size and number of electrical PCIe lanes routed to an expansion slot. For example, x16(4) means that the expansion slot is mechanically a x16 length connector, with 4 PCIe lanes supported.

Workstation specifications

	SFF
Processor technology	Intel Series C236 chipset: • Support for the Intel® Xeon® Processor E3 v5 Family, sixth-generation Intel Core™ processors up to 95 W, or Intel Pentium® processors • Integrated 2-channel memory controller • Microarchitecture improvements • Integrated graphics (some models) • Advanced Vector Extensions (AVX) to increase floating point performance • Intel DMI3 interface connecting the processor to the I/O controller
Power supply	• 240 W, 92% efficient, compatible with ENERGY STAR® Version 6.1 requirements • 200 W, 85% efficient, compatible with ENERGY STAR Version 6.1 requirements • Supports European Union ERP Lot 6 tier 2 power limit of less than 0.5W in off mode
Memory technology	• Dual in-line memory modules (DIMMs) based on DDR4 2133 MHz technology • Supports error checking and correcting (ECC) and non-ECC DIMMs • Two direct-attach memory channels enable low-latency access and fast data transfer for improved performance • Up to 64 GB system memory (16 GB DIMMs) • 2133 MHz 4, 8, 16 GB ECC unbuffered DIMM • 2133 MHz 4, 8, 16 GB non ECC unbuffered DIMM
Graphics cards	Supports: • Up to PCIe Gen 3 bus speeds. • PCIe x16 cards are supported in both x16 mechanical slots. Multiple graphics cards are supported, provided their total power consumption is less than 45W. • Up to three displays with integrated Intel HD graphics (depending on processor type) • The total number of displays supported depends on the number of graphics cards present, and the number of outputs on each card. • Windows 10 supports display output from both integrated graphics capable processors and discrete graphics cards. This feature is enabled by default, and can be changed through the Computer Setup (F10) Utility. **NOTE:** Most supported Intel Core processors provide Intel HD Graphics 510/530; Intel Xeon processors with model designations that end in "___5" provide Intel HD Graphics P530. **NOTE:** To drive more than three displays, use Computer Setup (F10) Utility to intermix integrated Intel HD graphics and discrete graphics cards (with four or more displays, HP recommends using only discrete graphics cards).
I/O technology	• RAID configurations for SATA RAID levels 0, 1 • Two external and one internal USB 2.0 ports (includes front charging port) • Eight external USB 3.0 ports and one internal USB 3.0 port • Three DisplayPort 1.2 connectors • Serial header that can be used with an optional PCI bulkhead connector • Native M.2 connector with PCIe x4 interface

HP Z240 Tower Workstation components

This section describes the HP Z240 Tower Workstation components.

For complete and current information on supported accessories and components for the computer, see http://partsurfer.hp.com.

HP Z240 Tower Workstation front panel

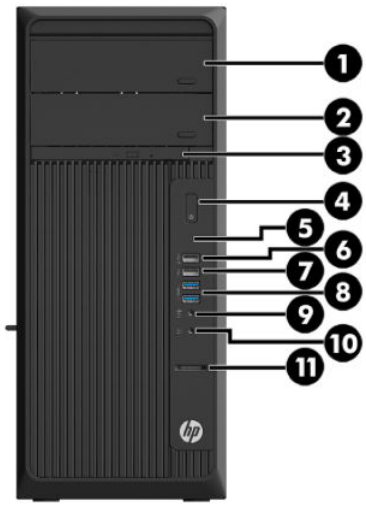

1		Optional hard disk/optical disc drive (not shown)	7		USB 2.0 ports (1) (black)
2		Optional hard disk/optical disc drive (not shown)	8		USB 3.0 ports (2) (blue)
3		Optical disc drive	9		Microphone or headphones connector (software selectable, default mode is microphone)
4		Power button	10		Headphone connector
5		Hard disk drive activity light	11		Optional media card reader (shown)
6		USB 2.0 port, charging (1, black)			

HP Z240 Tower Workstation rear panel

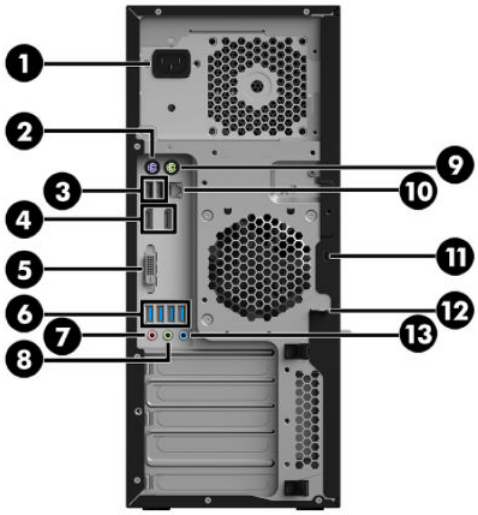

1		Power cord connector	8		Audio line-out connector (green)
2		PS/2 keyboard connector (purple)	9		PS/2 mouse connector (green)
3		USB 2.0 ports (2) (black)	10		RJ-45 network connector
4		Display Port (DP) connectors (2)	11		Cable lock slot
5		DVI-D connector	12		Padlock loop
6		USB 3.0 ports (4) (blue)	13		Audio line-in connector (blue)
7		Microphone connector (pink)			

NOTE: The labels for the rear panel connectors use industry-standard icons and colors.

NOTE: The DP and DVI-D ports are not supported when the system is configured with Intel Xeon E3-12x0 v5 processors. Also, if a discrete graphics card is installed these ports are disabled by default.

NOTE: Simultaneous usage of integrated Intel HD graphics and discrete graphics cards (in order to drive more than three displays) can be enabled using the Computer (F10) Setup Utility. However, HP recommends using only discrete graphics cards when attaching four or more displays.

Chassis components

The following figure shows the chassis components of a typical tower workstation layout. Drive configurations can vary.

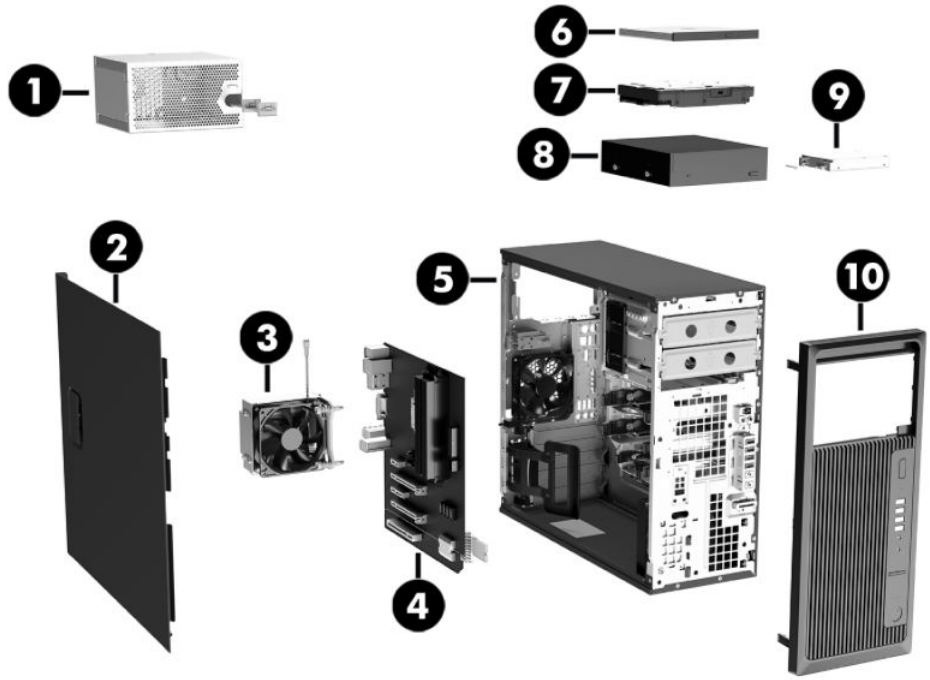

Item	Description	Item	Description
1	Power supply	6	Slim optical drive
2	Side access panel	7	Hard drive
3	Cooler	8	Optional second optical drive
4	System board	9	Optional solid state drive
5	Chassis	10	Front bezel

System board components

The following illustration and table identify the system board components for the tower workstation.

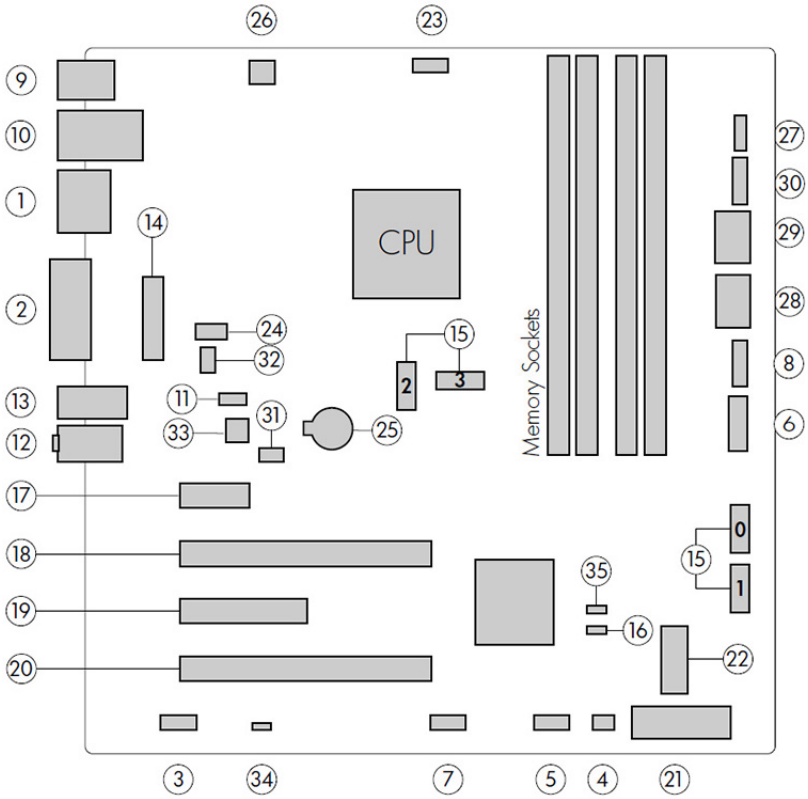

	I/O		SATA		Power
1	Dual-Mode DisplayPort	15	AHCI 6Gb/s	25	Battery
2	DVI video		**PCI/PCIe**	26	Processor power
3	Front audio	16	Z turbo drive LED (E19)	27	Front power button/LED
4	Front speaker	17	PCIe3 x1	28	Main power
5	Front USB 2.0	18	PCIe3 x16	29	SATA power
6	Front USB 3.0	19	PCIe3 x4	30	Power COMM
7	Internal USB 2.0	20	PCIe3 x16 (4)		**Security**
8	Internal USB 3.0	21	PCI (optional)	31	Chassis solenoid lock
9	Keyboard / mouse		**NOTE:** For related expansion card slot information, see Expansion slots on page 47	32	Hood sensor
10	Network / rear USB 2.0		**M.2**		**Service**
11	Thunderbolt (optional)	22	PCIe3 x4	33	Clear CMOS button
12	Rear audio		**Cooling**	34	ME/AMT flash override
13	Rear USB 3.0	23	Processor fan	35	Password jumper
14	Serial (optional)	24	Rear fan		

System board architecture

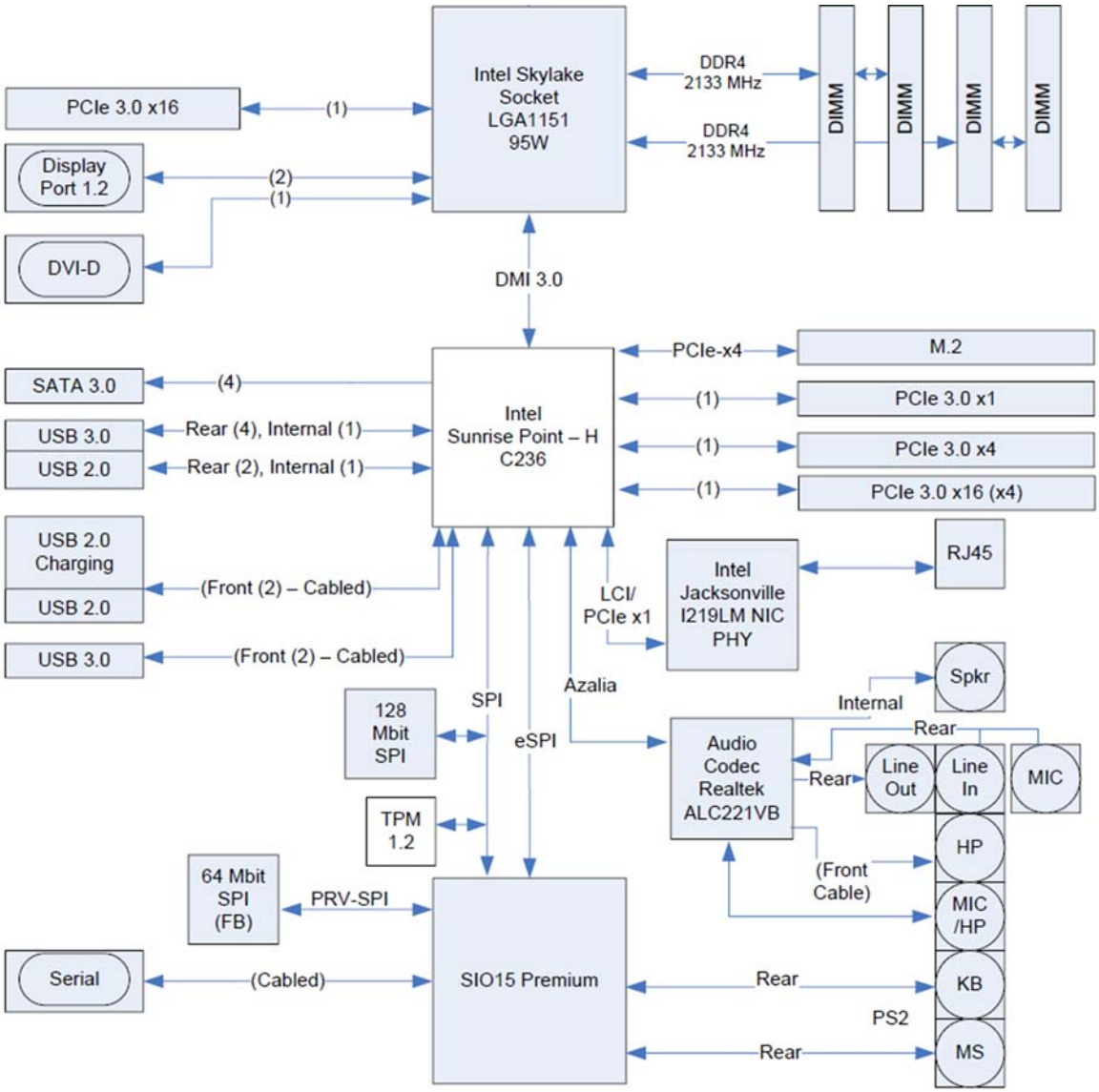

NOTE: The PCIe designators indicate the mechanical connector size and number of electrical PCIe lanes routed to an expansion slot. For example, x16(4) means that the expansion slot is mechanically a x16 length connector, with 4 PCIe lanes supported.

Workstation specifications

	Tower
Processor technology	Intel Series C236 chipset: • Support for the Intel Xeon Processor E3 v5 Family or sixth-generation Intel Core processors up to 95 W • Integrated 2-channel memory controller • Microarchitecture improvements • Integrated graphics (some models) • Advanced Vector Extensions (AVX) to increase floating point performance • Intel DMI3 interface connecting the processor to the I/O controller
Power supply	• 400 W, 92% efficient, compatible with ENERGY STAR Version 6.1 requirements • 280 W, 90% efficient, compatible with ENERGY STAR Version 6.1 requirements • Supports European Union ERP Lot 6 tier2 power limit of less than 0.5 W in off mode
Memory technology	• Dual in-line memory modules (DIMMs) based on DDR4 2133MHz technology • Supports error checking and correcting (ECC) and non-ECC DIMMs • Two direct-attach memory channels enable low-latency access and fast data transfer • Up to 64 GB system memory (16 GB DIMMs) • 2133 MHz 4, 8, 16 GB ECC unbuffered DIMM • 2133 MHz 4, 8, 16 GB non ECC unbuffered DIMM
Graphics cards	Supports: • Up to PCIe Gen 3 bus speeds. • PCIe x16 cards are supported in both x16 mechanical slots. Multiple graphics cards are supported, provided their total power consumption is less than 45W. • Up to three displays with integrated Intel HD graphics (depending on processor type). • The total number of displays supported depends on the number of graphics cards present, and the number of outputs on each card. • Windows 10 supports display output from both integrated graphics capable processors and discrete graphics cards. This feature is enabled by default, and can be changed through the Computer Setup (F10) Utility. **NOTE:** Most supported Intel Core processors provide Intel HD Graphics 510/530; Intel Xeon processors with model designations that end in "___5" provide Intel HD Graphics P530. **NOTE:** To drive more than three displays, use Computer Setup (F10) Utility to intermix integrated Intel HD graphics and discrete graphics cards (with four or more displays, HP recommends using only discrete graphics cards).
I/O technology	• RAID configurations for SATA RAID levels 0, 1 • Supports eSATA (3.0 Gbps) at only one SATA port (P3) using an optional adapter • Four external and two internal USB 2.0 ports • Six external and one internal USB 3.0 port • Two DisplayPort 1.2 connectors • One DVI-D connector • Serial header that can be used with an optional PCI bulkhead connector

	Tower
• Native M.2 connector with PCIe x4 interface	

Product specifications

Workstation weights and dimensions

Characteristic		HP Z240 SFF	HP Z240 Tower
Weight	Standard configuration	6.7 kg (14.86 lb.)	9.4 kg (20.79 lb)
	Minimum configuration	5.7 kg (12.66 lb)	8.6 kg (18.95 lb)
	Maximum configuration	7.7 kg (16.93 lb)	11.9 kg (26.20 lb)
Chassis dimensions *Tower configuration*	Height	33.8 cm (13.3 in)	39.9 cm (15.7 in)
	Width	10.0 cm (3.95 in)	17.0 cm (6.7 in)
	Depth	38.1 cm (15.0 in)	44.2 cm (17.4 in)
Chassis dimensions *Converted desktop configuration*	Height	10.0 cm (3.95 in)	17.0 cm (6.7 in)
	Width	33.8 cm (13.3 in)	39.9 cm (15.7 in)
	Depth	38.1 cm (15.0 in)	44.2 cm (17.4 in)

Environmental specifications

Characteristic	HP Z240 SFF and Z240 Tower Workstations
Temperature	**Operating**: 5°C to 35°C (40°F to 95°F) **Non-operating**: -40°C to 60°C (-40°F to 140°F) **NOTE:** Derate by 1°C (1.8°F) for every 305 m (1,000 ft) altitude over 1,524 m (5,000 ft).
Humidity	**Operating**: 8% to 85% relative humidity, non-condensing **Non-operating**: 8% to 90% relative humidity, non-condensing
Altitude	**Operating:** 0 to 3,048 m (10,000 ft) **Non-operating**: 0 to 9,144 m (30,000 ft)
Shock	**Operating**: ½-sine: 40g, 2-3ms **Non-operating**: • ½-sine: 160 cm/s, 2-3ms (~100*g*) • square: 422 cm/s, 20*g* **NOTE:** Values represent individual shock events and do not indicate repetitive shock events.
Vibration	**Operating Random**: 0.5*g* (rms), 5-300 Hz **Non-Operating**: random: 2.0*g* (rms), 10-500 Hz **NOTE:** Values do not indicate continuous vibration.

Ensuring proper ventilation

Proper ventilation for the system is important for workstation operation. Follow these guidelines:

- Operate the workstation on a sturdy, level surface.
- Provide at least 15.24 cm (6 inches) of clearance at the front and back of the workstation. (Workstation models vary.)

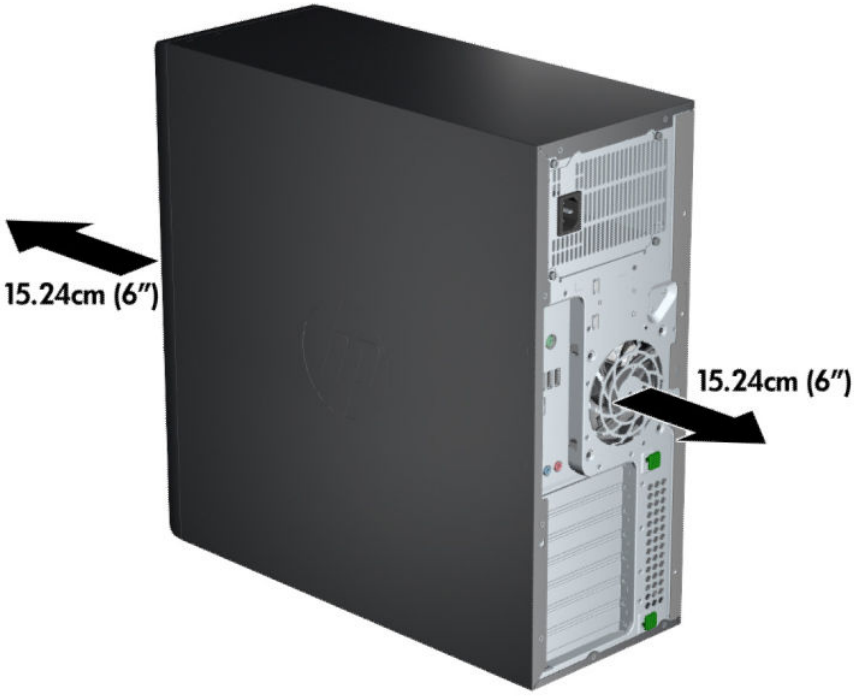

- Be sure that the ambient air temperature falls within the environmental specifications listed in this document.

NOTE: The ambient upper limit of 35°C (95°F) is only good up to 1524 m (5000 ft) elevation. There is a 1°C (33.8°F) per 304.8 m (1000 ft) derating above 1524 m (5000 ft). So, at 3,048 m (10,000 ft), the upper ambient air temperature limit is 30°C (86°F).

- For cabinet installation, be sure that adequate cabinet ventilation and the ambient temperature within the cabinet does not exceed specified limits.
- Never restrict the incoming or outgoing airflow of the workstation by blocking any vents or air intakes, as shown in the following figure.

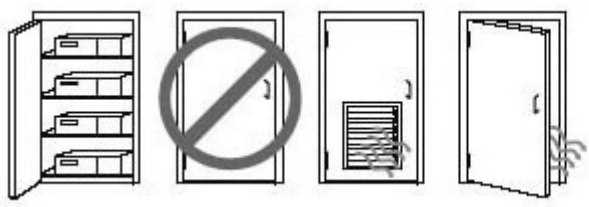

2 System management

This section describes the tools and utilities that provide system management for the workstation.

Topics
Power management and performance features on page 16
BIOS ROM on page 17
Computer Setup (F10) Utilities on page 18
Desktop management on page 29

Power management and performance features

ERP compliance mode

This computer provides ERP compliance mode capability.

When enabled, the computer shuts down to the lowest possible power state. The computer must then be turned on with the power button. One of the effects is that "wake on LAN" is disabled.

When disabled, the computer powers down conventionally.

Enabling ERP compliance mode	1. Press F10 during startup. 2. Using the arrow keys, select the **Advanced > Power Management Options**, and then select **S5 Maximum Power Savings**. 3. Select **Main > Save Change and Exit**, and then press enter to accept the change. 4. If using Windows 8 or Windows 8.1, boot to Windows and search in the Start Menu for the setting **Choose what the power buttons do**. Uncheck **Turn on fast startup (recommended)**. If the checkbox is not available, select **Change settings that are currently unavailable** at the top of the window. If using Windows 10, use the taskbar search field to search for Power Options. Select **Choose what the power button does**, then select **Turn on fast startup (recommended)**.
Disabling ERP compliance mode	1. Press F10 during startup. 2. Using the arrow keys, select **Advanced > Power Management Options**, then clear **S5 Maximum Power Savings**. 3. Select **Main** > **Save Change and Exit**, and then press enter to accept the change. 4. If using Windows 8 or Windows 8.1, boot to Windows and search in the Start Menu for the setting **Choose what the power buttons do**. Check **Turn on fast startup (recommended)**. If the check box is not available, select **Change settings that are currently unavailable** at the top of the window. If using Windows 10, use the taskbar search field to search for Power Options. Select **Choose what the power button does**, then select **Turn on fast startup (recommended)**.

Hyper-Threading Technology (HTT)

This computer supports HTT, an Intel-proprietary technology that improves processor performance through parallelization of computations (doing multiple tasks at once).

The operating system treats an HTT-enabled processor as two virtual processors, and shares the workload between them when possible. This feature requires that the operating system support multiple processors and be specifically optimized for HTT.

Use Computer Setup (F10) Utility to enable HTT.

Go to http://www.hp.com/go/quickspecs to determine if your CPU supports HTT.

SATA Power Management

SATA Power Management enables or disables SATA bus and/or device power management.

Intel Turbo Boost Technology

Your workstation supports Intel® Turbo Boost Technology.

This feature enables the CPU to run at a higher than normal rate. When all CPU cores are not necessary for the workload, inactive cores are turned off and power is diverted to the active cores to increase their performance.

Turbo Boost is enabled and disabled with Computer Setup (F10) Utility.

Go to http://www.hp.com/go/quickspecs to determine if your CPU supports Turbo Boost.

Non-Uniform Memory Access (NUMA)

Non-uniform memory access (NUMA) is available on some workstations. NUMA can improve memory bandwidth and latency for multi-process or multi-threaded applications or workloads. Observed performance improvements depend on the operating system, customer workload, system configuration, and the degree to which the applications used are designed to be NUMA-aware/efficient.

NUMA requires that both processor sockets be populated. Installed memory should be balanced between both processors for maximum performance.

NUMA is enabled if Memory Node Interleave is disabled in the system BIOS. To do this, press F10 during startup to enter Computer Setup (F10) Utility. Select **Advanced** > **Chipset/Memory**. Use the arrow keys to set **Memory Node Interleave** to **Disable**. Press F10 to exit the menu, and then select **Main** > **Save Changes and Exit**. Your change takes effect when the computer restarts.

BIOS ROM

The BIOS ROM is a collection of machine language applications stored as firmware in ROM. It includes functions such as Power-On Self-Test (POST), PCI device initialization, Plug and Play support, power management, and Computer Setup (F10) Utility.

Go to http://www.hp.com/go/quickspecs to review the latest BIOS ROM specifications.

Computer Setup (F10) Utilities

Use Computer Setup (F10) Utility to do the following:

- Change settings from the defaults or restore the settings to default values.
- View the system configuration, including settings for processor, graphics, memory, audio, storage, communications, and input devices.
- Modify the boot order of bootable devices such as hard drives, optical drives, or USB flash media devices.
- (Windows 7 only) Establish an Ownership Tag, the text of which is displayed each time the system is turned on or restarted.
- Enter the Asset Tag or property identification number assigned by the company to this computer.
- Enable the power-on password prompt during system restarts (warm boots) as well as during power-on.
- Establish an administrator password that controls access to the Computer Setup (F10) Utility and the settings described in this section.
- Establish minimum requirements for valid passwords, including length and required types of characters.
- Secure integrated I/O functionality, including the serial, USB, or audio, or embedded NIC, so that they cannot be used until they are unsecured.
- Enable or disable different types of boot sources.
- Configure features such as Secure Boot, power management, virtualization support, and language and keyboard type used in Setup and POST.
- Replicate the system setup by saving system configuration information on a USB device and restoring it on one or more computers.
- Enable or disable DriveLock security or securely erase a hard drive (when supported by drive).

Using Computer Setup (F10) Utilities

Computer Setup can be accessed only by turning the computer on or restarting the system. To access the Computer Setup Utilities menu, complete the following steps:

1. Turn on or restart the computer.
2. Repeatedly press F10 when the monitor light turns on to access the utility.

   You can also press Esc to a menu that allows you to access different options available at startup, including the Computer Setup utility.

   NOTE: If you do not press F10 at the appropriate time, you must restart the computer and again repeatedly press F10 when the monitor light turns green to access the utility.

3. A choice of four headings appears in the Computer Setup Utilities menu: Main, Security, Advanced, and UEFI Drivers.

   NOTE: Selecting UEFI Drivers restarts the computer into the 3rd party option ROM management application. You can access this application directly by pressing F3 during startup.

4. Use the arrow (left and right) keys to select the appropriate heading. Use the arrow (up and down) keys to select the option you want, then press Enter. To return to the Computer Setup Utilities menu, press Esc.
5. To apply and save changes, select **Main** > **Save Changes and Exit**.

- If you have made changes that you do not want applied, select **Ignore Changes and Exit**.
- To restore settings from the Advanced and Main menus to original values, select **Apply Factory Defaults and Exit**.
- To restore settings from the Advanced and Main menus to those previously saved by **Save Custom Defaults**, select **Apply Custom Defaults and Exit**. If no custom defaults have been saved, then factory defaults are used.

NOTE: Settings in the **Security** menu are not modified by **Apply Defaults**. Those values are reset by **Restore Security Settings to Factory Defaults** at the bottom of the **Security** menu.

NOTE: Not all settings shown in the following sections are available for all models

CAUTION: Do NOT turn the computer power OFF while the BIOS is saving the Computer Setup (F10) changes because the settings could become corrupted. It is safe to turn off the computer only after exiting the F10 Setup screen.

Computer Setup–Main

NOTE: Support for specific Computer Setup options may vary depending on the hardware configuration.

Table 2-1 Computer Setup—Main

Option	Description
System Information	Lists all information in following list if **Advanced System Information** is selected. Lists smaller subset if **Basic System Information** is selected. • Product name • Installed memory size • Processor type • Processor cache size (L1/L2/L3) • Processor speed • MicroCode Revision • Processor Stepping • Memory Speed • DIMM size (for each installed module) • System BIOS version • ME Firmware version (Intel only) • Video BIOS version • Super I/O Firmware version • Born On Date • Serial Number • SKU number • UUID (Universally Unique Identifier) • Asset Tracking Number • Feature Byte • Build ID • Product Family • System Board ID • System Board CT • Integrated MAC Address
System Diagnostics	If the hard drive has the HP Advanced Diagnostics installed, the application will launch. If HP Advanced Diagnostics is not installed, then a basic version built into the BIOS will provide the capability to perform the following functions: • Memory Test • Hard Drive Check • Language
Update System BIOS	Lets you update the system BIOS from www.hp.com or another network server, from a removable USB drive, or from a file located on the hard drive. • ‘Check HP.com for BIOS Updates’ or ‘Check the Network for BIOS Updates’

Table 2-1 Computer Setup—Main (continued)

	The string that appears here depends on the setting in 'BIOS Update Preferences'. • Lock BIOS Version If this option is checked, the system is locked to the current BIOS version and updates are not allowed. • BIOS Update Preferences Allows the administrator to select the source of network updates (www.hp.com or another network server) and allows configuration of a periodic check for updates, including policies for: ■ Check for updates and prompt the user to accept or reject the update at that time ■ Check for updates and install all new versions ■ Check for updates and install only new versions marked important • Network Configuration Settings • Update BIOS Using Local Media Lets you access files on either USB storage or the hard drive. The HP BIOS Update and Recovery application included in BIOS Softpaqs at www.hp.com will copy the BIOS file to the correct location on the hard drive or USB device.
System IDs	Lets you set the following values: • Asset Tracking Number • Ownership Tag
Replicated Setup	**Backup current settings to USB device** Saves system configuration to a formatted USB flash media device. **Restore current settings from USB device** Restores system configuration from a USB flash media device.
Save Custom Defaults	Saves the current system configuration settings as the custom default set.
Apply Custom Defaults and Exit	Applies the custom default settings to the computer after rebooting. Does not apply to options in the **Security** menu.
Apply Factory Defaults and Exit	Restores the factory system configuration settings to the computer after rebooting. Does not apply to options in the **Security** menu.
Ignore Changes and Exit	Exits Computer Setup without applying or saving any changes.
Save Changes and Exit	Saves changes to current system configuration, exits Computer Setup, and reboots.

Computer Setup—Security

NOTE: Support for specific Computer Setup options may vary depending on the hardware configuration.

Table 2-2 Computer Setup—Security

Option	Description
Set up BIOS Administrator Password	Lets you set and enable a BIOS administrator password, which includes the following privileges: • Manage other BIOS users • Full access to BIOS policy and settings • Unlock the computer when other BIOS users fail the preboot authentication. **NOTE:** Creating a BIOS user disables the Fast Boot option. **NOTE:** If the password is set, it is required to change Computer Setup options, update the BIOS, and make changes to certain plug and play settings under Windows.
Change BIOS Administrator Password (This selection is active only if a BIOS administrator password is set.)	Lets you change the BIOS administrator password. You must know the current password to be able to change it.
Password Policies	Let you set the guidelines for a valid password. Options include: • Password minimum length • Requires at least one symbol • Requires at least one number • Requires at least one upper case character • Requires at least one lower case character • Allow spaces **Clear Password Jumper** Select 'Honor' to allow or 'Ignore' to not allow the absence of the password jumper to clear the passwords at boot up. Default is 'Honor'.
Security Configuration	**TPM Embedded Security** • **TPM Device** Lets you set the Trusted Platform Module as available or hidden. • **TPM State** Select to enable the TPM. • **TPM Clear** Select to reset the TPM to an unowned state. After the TPM is cleared, it is also turned off. To temporarily suspend TPM operations, turn the TPM off instead of clearing it. **CAUTION:** Clearing the TPM resets it to factory defaults and turns it off. You will lose all created keys and data protected by those keys. **BIOS Sure Start** • **Verify Boot Block on every Boot** Select to check validity of boot block region each boot. If not selected, boot block region will be validated on power cycles.

Table 2-2 Computer Setup—Security (continued)

	• **Data Recovery Policy** Select 'Automatic' or 'Manual' to set data recovery policy. 'Manual' lets you select whether or not to execute recovery of a corrupted region if it is detected. **Dynamic Runtime Scanning of Boot Block** Verifies the integrity of the BIOS boot block region several times each hour while the system is running.
Set Up BIOS Power-On Password	Lets you set and enable a BIOS power-on password. The power-on password prompt appears after a power cycle or reboot. If the user does not enter the correct power-on password, the unit will not boot.
Change BIOS Power-On Password (This selection is active only if a BIOS power-on password is set.)	Lets you change the BIOS power-on password. You must know the current password to be able to change it.
DriveLock	Allows you to assign or modify a master or user password for hard drives. When this feature is enabled, the user is prompted to provide one of the DriveLock passwords during POST. If neither is successfully entered, the hard drive will remain inaccessible until one of the passwords is successfully provided during a subsequent cold-boot sequence. **NOTE:** This selection will only appear when at least one drive that supports the DriveLock feature is attached to the system. **CAUTION:** Be aware that these settings take place immediately. A save is not necessary. **CAUTION:** Be sure to document the DriveLock password. Losing a DriveLock password will render a drive permanently locked. After you select a drive, the following options are available: **Set DriveLock Master Password**. Sets the drive's master password but does not enable DriveLock. **Enable DriveLock**. Sets the drive's user password and enables DriveLock.
Secure Erase	Lets you select a hard drive to completely erase. Once a hard drive has been erased with a program that utilizes Secure Erase firmware commands, no file recovery program, partition recovery program, or other data recovery method will be able to extract data from the drive.
Save/Restore MBR of the system hard drive	**NOTE:** Windows 8.1 and Windows 10 systems are generally not formatted to include an MBR. Instead they use GUID Partition Table (GPT) format, which better supports large hard drives. Enabling this feature will save the Master Boot Record (MBR) of the system hard drive. If the MBR gets changed, the user will be prompted to restore the MBR. Default is disabled. The MBR contains information needed to successfully boot from a disk and to access the data stored on the disk. Master Boot Record Security may prevent unintentional or malicious changes to the MBR, such as those caused by some viruses or by the incorrect use of certain disk utilities. It also allows you to recover the "last known good" MBR, should changes to the MBR be detected when the system is restarted. **NOTE:** Most operating systems control access to the MBR of the current bootable disk; the BIOS cannot prevent changes that may occur while the operating system is running. Restores the backup Master Boot Record to the current bootable disk. Default is disabled. Only appears if all of the following conditions are true: • MBR security is enabled • A backup copy of the MBR has been previously saved • The current bootable disk is the same disk from which the backup copy was saved

Table 2-2 Computer Setup—Security (continued)

	CAUTION: Restoring a previously saved MBR after a disk utility or operating system has modified the MBR, may cause the data on the disk to become inaccessible. Only restore a previously saved MBR if you are confident that the current bootable disk's MBR has been corrupted or infected with a virus.
Smart Cover	**Cover Lock** (Lock/Unlock) Default is 'Unlock'. **Cover Removal Sensor** (Disabled/Notify user/Administrator password) Lets you disable the cover sensor or configure what action is taken if the computer cover was removed. Default is 'Disabled'. **NOTE:** **Notify user** alerts the user with a POST error on the first boot after the sensor detects removal of the cover. If the password is set, **Administrator Password** requires that the password be entered to boot the computer if the sensor detects that the cover has been removed.
System Management Command	Allows authorized personnel to reset security settings during a service event. Default is enabled.
Restore Security Settings to Default	This action resets security devices, clears BIOS passwords (not including DriveLock), and restores settings in the **Security menu** to factory defaults.

Computer Setup—Advanced

NOTE: Support for specific Computer Setup options may vary depending on the hardware configuration.

Table 2-3 Computer Setup—Advanced (for advanced users)

Option	Heading
Display Language	Lets you select the language of the menus in F10 Setup and the keyboard layout.
Scheduled Power-On	This feature wakes the system up from a powered off state at a specified date and time.

Boot Options	Select the devices that the computer can boot from, as well as other options, including:
	• Startup Menu Delay(sec). Enabling this feature will add a user-specified delay to the POST process. One purpose for the delay is to provide additional time to activate hotkeys such as Esc for the Startup Menu or F10 for Computer Setup.
	• Fast Boot. Default is enabled for Windows 8.1 or later, and disabled for Windows 7 systems.
	• CD-ROM Boot. Default is enabled.
	• Network (PXE) Boot. Default is enabled.
	• Prompt on Memory Size Change. Default is enabled.
	• Prompt on Fixed Storage Change. Default is disabled.
	• After Power Loss. Default is Power Off.
	  ■ Power off—causes the computer to remain powered off when power is restored.
	  ■ Power on—causes the computer to power on automatically as soon as power is restored.
	  ■ Previous state—causes the computer to power on automatically as soon as power is restored, if it was on when power was lost.
	NOTE: If the system is configured to 'Power On from Keyboard Ports' (see Power Management Options), then this setting is forced to 'Power On'.
	• Audio Alerts During Boot. Default is enabled. When disabled, most audible beeps from errors, warnings, and password prompts during boot up are suppressed.
	• UEFI Boot Order.

Table 2-3 Computer Setup—Advanced (for advanced users) (continued)

	Default is enabled. Specify the order in which UEFI boot sources (such as a internal hard drive, USB hard drive, USB optical drive, or internal optical drive) are checked for a bootable operating system image. UEFI boot sources always have precedence over legacy boot sources. • Legacy Boot Order Specify the order in which legacy boot sources (such as a network interface card, internal hard drive, USB optical drive, or internal optical drive) are checked for a bootable operating system image. Specify the order of attached hard drives. The first hard drive in the order will have priority in the boot sequence and will be recognized as drive C (if any devices are attached). **NOTE:** To drag a device to a preferred place, press Enter. **NOTE:** MS-DOS drive lettering assignments may not apply after a non-MS-DOS operating system has started. **Shortcut to Temporarily Override Boot Order** To boot **one time** from a device other than the default device specified in Boot Order, restart the computer and press Esc (to access the Startup menu) and then F9 (Boot Menu), or only F9 (skipping the Startup menu) when the monitor light turns green. After POST is completed, a list of bootable devices is displayed. Use the arrow keys to select the preferred bootable device and press Enter. The computer then boots from the selected non-default device for this one time.
Secure Boot Configuration	**Configure Legacy Support and Secure Boot** Legacy Support – Lets you turn off all legacy support on the computer, including booting to DOS, running legacy graphics cards, booting to legacy devices, and so on. Windows 7 for instance requires legacy support, whereas Windows 8 does not. Secure Boot – Lets you make sure an operating system is legitimate before booting to it, making Windows resistant to malicious modification from preboot to full OS booting, preventing firmware attacks. UEFI and Windows Secure Boot only allow code signed by pre-approved digital certificates to run during the firmware and OS boot process. Default is 'Legacy Support Enable and Secure Boot Disable' for Windows 7 and other non-Windows configurations. Default is 'Legacy Support Disable and Secure Boot Enable' for Windows 8.1 and later configurations. **Secure Boot Key Management** Lets you manage the custom key settings. **Clear Secure Boot Keys** Lets you delete any previously loaded custom boot keys. Clearing keys will disable secure boot. Default is disabled. **Reset Secure Boot keys to factory defaults** Default is disabled. **Enable MS UEFI CA key** Disabling this setting alters the Secure Boot key list to further restrict the allowed software components. Set this option to 'disable' to support Device Guard.
System Options	**Configure Storage Controller for RAID** (enable/disable) Lets you enable onboard RAID. Default is disabled. **POST Prompt for RAID Configuration** (Intel only) When disabled, the prompt for 'RAID option ROM' in legacy mode is suppressed. **Virtualization Technology (VTx)** (Intel only)

Table 2-3 Computer Setup—Advanced (for advanced users) (continued)

	Controls the virtualization features of the processor. Changing this setting requires turning the computer off and then back on. Default is disabled. **Virtualization Technology for Directed I/O (VTd)** (Intel only) Controls virtualization DMA remapping features of the chipset. Changing this setting requires turning the computer off and then back on. Default is disabled. **PCI Express Slot x** (enable/disable) Lets you disable individual expansion slots. **Allow PCIe/PCI SERR# Interrupt** (enable/disable) Allows PCI devices to report PCI/PCIe System Error signals, such as address parity errors, data parity errors, and critical errors other than parity. Default is enabled. **Power Button Override** (disable/4 sec/15 sec) Lets you disable or enable and select the number of seconds you have to hold down the power button for it to force the system to power off. Default is '4 sec'.
Built-In Device Options	**Embedded LAN Controller** Select to show the device in the operating system. Default is enabled. **Wake On LAN** Lets you either disable the Wake On LAN feature, or configure where the computer boots, including the network or hard drive. Default is Boot to Network. **Dust Filter** (select models only) Select to enable the Dust Filter replacement reminder, which can be set for 15, 30, 60, 90, 120, or 180 days. The reminder will show during POST after the reminder timer has expired. **Video Memory Size** Use this option to manage graphics memory allocation. The value you choose is allocated permanently to graphics and is unavailable to the operating system. **Audio Device** Select to show the device in the operating system. Default is enabled. **Internal Speakers** (does not affect external speakers) Clear to disable the chassis speaker. This function is applicable to normal audio playback in the operating system and does not affect the error or warning beeps during POST. Default is enabled. **Integrated Microphone** Clear to disable the integrated microphone. This does not affect devices plugged into audio jacks. Default is enabled. **Integrated Camera** Clear to disable the integrated webcam. Default is enabled. **Increase Idle Fan Speed(%)** Sets idle fan speed percentage. This setting only changes the minimum fan speed. The fan is still automatically controlled. **Fingerprint Device** Select to show the device in the operating system. Default is enabled. **Touch Panel** Clear to disable the display panel touch feature. Default is enabled.

Table 2-3 Computer Setup—Advanced (for advanced users) (continued)

Port Options	Allows you to hide the following ports from the operating system: • Serial port A • Serial port B • SATA0 • SATA1 • SATA2 • SATA3 • Front USB ports • Rear USB ports • USB charging port function • Media card reader **Restrict USB Devices** Specify the following categories of USB devices to enable: • Allow all USB devices • Allow only keyboard and mouse • Allow all but storage devices and hubs. When some devices are restricted, the system will disable USB ports that do not meet the allowed criteria. This feature is usually combined with similar policies within the operating system since USB devices can be moved to different ports. The ports disabled by the BIOS will remain disabled until the system is restarted.
Option ROM Launch Policy	These policies control whether Legacy Option ROMs or UEFI drivers are loaded. Default is 'All legacy' for Windows 7 and non-Windows configurations. Default is 'All UEFI' for Windows 8.1 or later. **Configure Option ROM Launch Policy** • All legacy • All UEFI • All UEFI except video
Slot settings	Lets you enable or disable any PCIe slot.
Power Management Options	**Runtime Power Management** (enable/disable) Allows certain operating systems to reduce processor voltage and frequency when the current software load does not require the full capabilities of the processor. Default is enabled. **Extended Idle Power States** (enable/disable) Allows certain operating systems to decrease the processors power consumption when the processor is idle. Default is enabled. **S5 Maximum Power Savings** (enable/disable) Enabling this feature reduces the power of the system as much as possible in the S5 state. Power is removed from the wake up circuitry, the expansion slots, and any management features while in S5. Default is disabled. **SATA Power Management** (enable/disable) Enables or disables SATA bus and/or device power management. Default is enabled. **Unique Sleep State Blink Rates** (enable/disable)

Table 2-3 Computer Setup—Advanced (for advanced users) (continued)

	This feature is designed to provide a visual indication of what sleep state the system is in. Each sleep state has a unique blink pattern. Default is disabled. **NOTE:** A normal shutdown goes to the S4 state for Windows 8 or later. S0 (On) = Solid white LED. S3 (Stand By)= 3 blinks at 1Hz (50% duty cycle) followed by a pause of 2 seconds (white LED) — repeated cycles of 3 blinks and a pause. S4 (Hibernation)= 4 blinks at 1Hz (50% duty cycle) followed by a pause of 2 seconds (white LED) — repeated cycles of 4 blinks and a pause. S5 (Soft Off) = LED is off.
Remote Management Options	**Active Management (AMT)** (enable/disable). Default is enabled. Allows you to discover, repair, and protect networked computing devices. **USB Key Provisioning Support** (enable/disable) Default is disabled. **USB Redirection Support** (enable/disable). Default is enabled. USB redirection allows USB devices plugged into a client computer to be transparently redirected to the guest operating system. **Unconfigure AMT on next boot** (Do Not Apply/Apply). Default is 'Do Not Apply'. **SOL Terminal Emulation Mode** (ANSI / VT100). Default is ANSI. SOL terminal emulation mode is only activated during remote AMT redirection operations. The emulation options allow administrators to select which mode works best with their console. **Show Unconfigure ME Confirmation Prompt** (enable/disable). Default is enabled. **Verbose Boot Messages** (enable/disable). Default is enabled. Verbose boot shows additional logging information during the boot. mainly for debugging if something goes wrong during bootup. **Watchdog Timer** (enable/disable). Default is enabled. Allows you to set amount of time for a operating system and BIOS watchdog alert to be sent if the timers are not deactivated. BIOS watchdog is deactivated by BIOS and would indicate that a halt occurred during execution if the alert is sent to the management console. An operating system alert is deactivated by the operating system image and would indicate that a hang occurred during its initialization. • OS Watchdog Timer (min.) – (5/10/15/20/25). Default is 5 min. • BIOS Watchdog Timer (min.) – (5/10/15/20/25). Default is 5 min. **CIRA Timeout (min.)** (1/2/3/4/Never) CIRA is Customer Initiated Remote Assistance, an Intel service to help users employing Active Management Technology (AMT).

Desktop management

This section summarizes capabilities, features, and key components of computer management.

Topics
Initial computer configuration and deployment on page 30
Installing a remote system on page 30
Copying a setup configuration to another computer on page 30
Updating and managing software on page 31
HP Client Management Solutions on page 31
Altiris Client Management Solutions on page 31
HP SoftPaq Download Manager on page 32
System Software Manager on page 32
ROM Flash on page 32
FailSafe Boot Block on page 32
Workstation security on page 33
Fault notification and recovery on page 39
Programmable power button (Windows only) on page 40

NOTE: Support for specific features described in this guide can vary by model and software version.

Initial computer configuration and deployment

The computer includes a preinstalled system software image. After a brief software unbundling process, the computer is ready to use.

If you prefer to replace the preinstalled software image with a customized set of system and application software, you can deploy a customized software image by:

- Installing additional software applications after unbundling the preinstalled software image
- Using a disk-cloning process to copy the contents from one hard drive to another

The HDD-based HP Recovery Manager ROM-based setup, and ACPI hardware provide further assistance with recovery of system software, configuration management and troubleshooting, and power management.

Support for specific features described in this guide can vary by model and software version.

The best deployment method depends on the information technology environment and processes.

Installing a remote system

Remote system installation enables starting and setting up the computer using software and configuration information on a network server. This feature is usually used for system setup and configuration and can be used to:

- Deploy a software image on new PCs
- Format a hard drive
- Install application software or drivers
- Update the operating system, application software, or drivers

To initiate a remote system installation, press f12 when **f12=Network Service Boot** appears in the lower-right corner of the HP logo screen. Follow the on-screen instructions to continue the installation process. The default boot order is a BIOS configuration setting that can be changed to always attempt a network boot.

Copying a setup configuration to another computer

This section provides information about replicating the computer setup.

CAUTION: Setup configuration is model-specific. File system corruption can result if source and target computers are not the same model.

To copy a setup configuration:

1. Select a setup configuration to copy, and then restart the computer.
2. As soon as you start or restart the computer, press and hold F10 until you enter Computer Setup (F10) Utility. If necessary, press enter to bypass the title screen.

   NOTE: If you do not press F10 at the appropriate time, you must restart the computer, and then press and hold F10 again to access the utility.

   If you are using a PS/2 keyboard, you might see a keyboard error message. Disregard it.
3. Select **Main** > **Replicated Setup** > **Backup current settings to USB device**. Follow the instructions on the screen to create the configuration file *cpqsetup.txt* and write it to a USB storage device.
4. Turn off the computer you are configuring and insert the removable USB media device containing the configuration file.

5. Turn on the computer you are configuring.
6. Press and hold the F10 key until you enter Computer Setup (F10) Utility. If necessary, press enter to bypass the title screen.
7. Select **Main** > **Replicated Setup** > **Restore current settings from USB device**, and then follow the instructions on the screen.
8. Restart the computer when the configuration is complete.

Updating and managing software

HP provides several tools for managing and updating software on desktops and computers:

- HP Client Manager Software
- Altiris Client Management Solutions
- HP SoftPaq Download Manager
- System Software Manager

HP Client Management Solutions

HP Client Management Solutions (CMS), available for download from http://www.hp.com/go/easydeploy, are standards-based solutions for managing and controlling computers in a networked environment.

HP Client Management Solutions offers these services:

- Detailed views of hardware inventory for asset management
- PC health-check monitoring and diagnostics
- Proactive notification of changes in the hardware environment
- Web-accessible reporting of business-critical details such as thermal warnings and memory alerts
- Remote updating of system software such as device drivers and ROM BIOS
- Remote changing of boot order
- Configuration of system BIOS settings

Altiris Client Management Solutions

Altiris and HP have partnered to provide comprehensive, tightly integrated systems management solutions to reduce the cost of owning HP client PCs.

The HP CMS is the foundation for additional Altiris Client Management Solutions that address the following topics.

- Inventory and asset management
- Deployment and migration
- Help desk and problem resolution
- Software and operations management

Go to http://www.hp.com/go/Altiris_Solutions for information about:

- How HP CMS works
- Which solutions are compatible with the operating system
- How to download a fully functional, 30-day evaluation version of Altiris solutions

HP SoftPaq Download Manager

HP SoftPaq Download Manager is a free, easy-to-use interface for locating and downloading software updates for the HP client PC models in your environment. By specifying your models, operating system, and language, you can quickly locate, sort, and select the softpaqs you need. For more information, go to http://www.hp.com/go/sdm.

System Software Manager

System Software Manager (SSM) is a utility available on Windows—based computers that enables you to update system-level software on multiple systems simultaneously. When executed on a PC client system, SSM detects hardware and software versions and then updates the software from a central repository, known as a *file store*. Driver versions supported by SSM are noted with a special icon on the software, the driver download website, and on the Support Software CD.

To download the utility or to obtain more information about SSM, see http://www.hp.com/go/ssm.

ROM Flash

BIOS settings are stored on a programmable flash ROM. By establishing an administrator password in Computer Setup (F10) Utility, you can protect unauthorized users from modifying the BIOS settings.

To upgrade the BIOS, download the latest SoftPaq images from http://www.hp.com/support/workstation_swdrivers.

Remote ROM Flash

Remote ROM Flash allows system administrators to safely upgrade the ROM on remote HP computers from a centralized network management console, resulting in a consistent deployment of, and greater control over, HP PC ROM images over the network.

To use Remote ROM Flash, the computer must be powered on, or turned on using Remote Wakeup.

For more information about Remote ROM Flash and HPQFlash, see the HP Client Manager Software or System Software Manager sections at http://www.hp.com/go/ssm.

HPQFlash

The HPQFlash utility is used to locally update or restore the system ROM on PCs using a Windows operating system. For more information about HPQFlash, see http://www.hp.com/go/ssm, and enter the name of the computer.

FailSafe Boot Block

FailSafe Boot Block enables BIOS recovery in the unlikely event of a ROM flash failure. For example, if a power failure occurs during a ROM upgrade, Boot Block uses a flash-protected section of the ROM to verify a valid system ROM flash when power is restored to the computer.

If the system ROM is valid, the computer starts normally.

If the system ROM fails the validation check, FailSafe Boot Block provides enough support to start the computer from a BIOS image CD created from a SoftPaq. The BIOS image CD programs the system ROM with a valid image.

When Boot Block detects an invalid system ROM, the computer power LED blinks red eight times and the computer beeps eight times; then the computer pauses for two seconds. On some models, a Boot Block recovery mode message appears.

In preparation for system recovery, use the BIOS CD media file in the SoftPaq to create a BIOS image CD or USB key.

Recovering the computer by using FailSafe Boot Block recovery mode

To recover the computer after it enters Boot Block recovery mode:

1. Remove any media such as USB keys or disks in the optical disk drives.
2. Insert a BIOS image CD into the DVD drive or insert a USB BIOS image flash drive, such as an HP DriveKey, into a USB port.
3. Turn off the computer, and then turn it back on.

   If no BIOS image CD or USB media is found, you are prompted to insert one and restart the computer.

   If an administrator password has been established, the caps lock light is illuminated and you are prompted for the password.
4. Enter the administrator password.

   If the computer starts from the CD or flash drive and successfully reprograms the ROM, three keyboard lights are illuminated and a rising-tone series of beeps signals successful recovery.
5. Remove the CD or flash drive and turn off the computer.
6. Restart the computer.

Workstation security

This section provides information about providing system security through asset tracking, password security, hard drive locking, and chassis locks.

Asset tracking

Asset tracking features provide asset tracking data that can be managed using HP Systems Insight Manager (HP SIM), HP Console Management Controller (CMC), or other systems-management applications.

Seamless, automatic integration between asset tracking features and these products enables you to choose the management tool that is best suited to the environment and to leverage investments in existing tools.

HP also offers several solutions for controlling access to valuable components and information:

- HP ProtectTools Embedded Security prevents unauthorized access to data, checks system integrity, and authenticates third-party users attempting system access.
- Security features such as ProtectTools and the Smart Cover Sensor (side access panel sensor) help prevent unauthorized access to the data and to the internal components of the computer.
- By disabling parallel, serial, or USB ports, or by disabling removable-media boot capability, you can protect valuable data assets.
- Memory Change and Side access panel sensor (Smart Cover Sensor) alerts can be forwarded to system management applications to deliver proactive notification of tampering with a computer's internal components.

ProtectTools, the Smart Cover Sensor, and the side access panel solenoid lock (Hood Lock) are available as options on select systems.

You can manage security settings as follows:

- Locally with Computer Setup (F10) Utility
- Remotely with HP CMS or HP System Software Manager (SSM), which enable the secure, consistent deployment and control of security settings from a simple command line utility

The following Computer Setup (F10) Utility features let you manage computer security.

Feature	Purpose
Removable Media Boot Control	Prevents booting from removable media drives
Serial, Parallel, USB, or Infrared Interface Control	Prevents transfer of data through the integrated serial, parallel, USB, or infrared interface
Power-On Password	Prevents use of the computer until the password is entered (applies to initial system startup and restarts)
Ddministrator Password	Prevents reconfiguration of the computer (through the Setup utility) until the password is entered
Network Server Mode	Provides unique security features for computers used as servers

SATA hard drive security

HP computers include the HP DriveLock facility for SATA hard drives to prevent unauthorized access to data.

⚠ **WARNING!** Enabling DriveLock can render a SATA hard drive permanently inaccessible if the master password is lost or forgotten. No method exists to recover the password or access the data.

DriveLock has been implemented as an extension to Computer Setup (F10) Utility functions. It is only available when hard drives that support the ATA security command set are detected. On HP computers, it is not available when the SATA emulation mode is RAID+AHCI or RAID.

DriveLock is for HP customers for whom data security is a paramount concern. For such customers, the cost of a hard drive and the loss of the data stored on it is inconsequential when compared to the damage that could result from unauthorized access to its contents.

To balance this level of security with the need to address the issue of a forgotten password, the HP implementation of DriveLock employs a two-password security scheme. One password is intended to be set and used by a system administrator, while the other is typically set and used by the user.

No "back door" can be used to unlock the drive if both passwords are lost. Therefore, DriveLock is most safely used when the data contained on the hard drive is replicated on a corporate information system or is regularly backed up.

If both DriveLock passwords are lost, the hard drive is rendered unusable. For users who do not fit the previously defined customer profile, this might not be acceptable. For users who fit this profile, it might be a tolerable risk, given the nature of the data stored on the hard drive.

DriveLock applications

The most practical use of DriveLock is in a corporate environment. The system administrator would be responsible for configuring the hard drive, which involves setting the DriveLock master password and a temporary user password. If you forget the user password or if the equipment is passed on to another employee, the master password can be used to reset the user password and regain access to the hard drive.

HP recommends that corporate system administrators who enable DriveLock also establish a corporate policy for setting and maintaining master passwords. This should be done to prevent a situation where an employee

sets both DriveLock passwords before leaving the company. In such a scenario, the hard drive is unusable and requires replacement. Likewise, by not setting a master password, system administrators might find themselves locked out of a hard drive and unable to perform routine checks for unauthorized software, other asset control functions, and support.

For users with less stringent security requirements, HP does not recommend enabling DriveLock. Users in this category include personal users, or users who do not maintain sensitive data on their hard drives as a common practice. For these users, the potential loss of a hard drive resulting from forgetting both passwords is much greater than the value of the data DriveLock protects.

Access to Computer Setup (F10) Utility and DriveLock can be restricted through the administrator password. By specifying an administrator password and not giving it to users, system administrators can restrict users from enabling DriveLock.

Using DriveLock

When hard drives that support the ATA security command set are detected, DriveLock appears under the Security menu in the Computer Setup (F10) Utility menu. You are presented with options to set the master password and to enable DriveLock. You must provide a user password to enable DriveLock. Because the initial configuration of DriveLock is typically performed by a system administrator, a master password should be set first.

HP encourages system administrators to set a master password whether they plan to enable DriveLock or not. This gives the administrator the ability to modify DriveLock settings if the drive is locked in the future. After the master password is set, the system administrator can enable DriveLock or leave it disabled.

If a locked hard drive is present, POST requires a password to unlock the device. If a power-on password is set and it matches the device's user password, POST does not prompt the user to re-enter the password. Otherwise, the user is prompted to enter a DriveLock password.

For a cold start, use the master or user password. For a warm start, enter the same password used to unlock the drive during the preceding cold start.

Users have two attempts to enter a correct password. During cold start, if neither attempt succeeds, POST continues but the drive remains inaccessible. During a warm-start or restart from Windows, if neither attempt succeeds, POST halts and the user is instructed to cycle power.

Enabling DriveLock

To enable and set the DriveLock user password:

1. Turn on or restart the computer.
2. As soon as you turn on the computer, repeatedly press the F10 key until you enter Computer Setup (F10) Utility.

   If you do not press F10 at the appropriate time, you must restart the computer, then repeatedly press F10 again to access the utility.
3. Select **Security** > **DriveLock Security**.
4. For each DriveLock-capable drive, select a drive by pressing F10 to accept.
5. To enable DriveLock for a specific drive, select **Enable DriveLock**

   NOTE: To set the DriveLock master password, select **Set DriveLock Master Password**.

   CAUTION: If you forget the DriveLock password, the drive is unusable.
6. Enter a new user password (1 to 32 characters long), and then press F10 to accept.

7. Enter the password again in the Enter New Password Again field. If you forget this password, the drive is rendered permanently disabled.

8. Select **File** > **Save Changes and Exit**, and then press enter to accept the changes. After you press enter, the computer performs a cold start before invoking the DriveLock function.

   When the computer starts, you are prompted to enter the DriveLock password for each DriveLock-capable drive for which you have set a password. You have two attempts to enter the password correctly. If the password is not entered correctly, the computer attempts to start anyway. However, the boot process most likely fails because data from a locked drive cannot be accessed.

   In a single drive computer, if the drive has DriveLock enabled, the computer might not be able to boot to the operating system, and might try to boot from the network or from another storage device (depending on the boot ordering options). Regardless of the outcome of the start attempts, the drive-locked drive remains inaccessible without the DriveLock password.

   In a two-drive computer that has a boot drive and a data drive, you can apply the DriveLock feature to the data drive only. In this case, the computer can always start, but the data drive is accessible only when the DriveLock password is entered.

   When you start or restart the computer, you must enter DriveLock passwords. For example, if you boot to DOS and press ctrl+alt+del, you must enter the DriveLock password before the computer completes the next start cycle. This restart-start behavior is consistent with the DriveLock feature.

Password security

This computer supports security password features, which can be established through the Computer Setup Utilities menu.

This computer supports two security password features that are established through the Computer Setup Utilities menu: administrator password and power-on password. When you establish only an administrator password, any user can access all the information on the computer except Computer Setup. When you establish only a power-on password, the power-on password is required to access Computer Setup and any other information on the computer. When you establish both passwords, only the administrator password will give you access to Computer Setup.

When both passwords are set, the administrator password can also be used in place of the power-on password as an override to log in to the computer. This is a useful feature for a network administrator.

If you forget one or both passwords, you can clear all passwords by powering off the system, opening the cover, temporarily removing the PSWD jumper, and booting once. This will erase the administrator and power-on passwords. You must restore the jumper to create new passwords.

⚠ **CAUTION:** Pushing the CMOS button with power removed will reset the BIOS settings to factory defaults. It may be useful to back up the BIOS settings or save them as custom defaults before resetting them in case they are needed later. Back up can be performed in Computer Setup or using the BiosConfigUtility tool available from www.hp.com. See Computer Setup (F10) Utilities on page 18 for information on backing up the BIOS settings.

Establishing an administrator password using Computer Setup (F10) Utility

Establishing an administrator password through Computer Setup (F10) Utility prevents reconfiguration of the computer (through the use of Computer Setup (F10) Utility) until the password is entered.

To establish an administrator password using Computer (F10) Setup menu:

1. Turn on or restart the computer.
2. As soon as the computer is turned on, press and hold F10 until you enter Computer Setup (F10) Utility. Press enter to bypass the title screen, if necessary.

   If you do not press F10 at the appropriate time, you must restart the computer, and then press and hold F10 again to access the utility.

   If you are using a PS/2 keyboard, you might see a keyboard error message. Disregard it.
3. Select **Security** > **Set Up BIOS Administrator Password** and then follow the on-screen instructions.
4. Before exiting, select **Main** > **Save Changes and Exit**.

Establishing a power-on password using Computer Setup (F10) Utility

Establishing a power-on password through Computer Setup (F10) Utility prevents access to the computer when power is connected, unless the password is entered. When a power-on password is set, Computer Setup (F10) Utility presents Password Options in the Security menu. The password options include Network Server Mode and Password Prompt on Warm Boot.

When Network Server Mode is disabled, you must enter the password when the computer is turned on, when the key icon appears on the monitor. When Password Prompt on Warm Boot is enabled, you must enter the password. The password must also be entered each time the computer is restarted. When Network Server Mode is enabled, the password prompt is not presented during POST, but an attached PS/2 keyboard remains locked until you enter the power-on password.

To enable Network Server Mode, you must set a power-on password under **Security** > **Set Up BIOS Power-On Password**. This option enables the computer to start without requiring the power-on password, but the keyboard and mouse are locked until you enter the password. The keyboard LEDs rotate constantly when the computer is in locked mode.

To establish a power-on password through the Computer Setup (F10) Utility menu:

1. Turn on or restart the computer.
2. As soon as the computer is turned on, press and hold F10 until you enter Computer Setup (F10) Utility. Press enter to bypass the title screen, if necessary.

   If you do not press F10 at the appropriate time, you must restart the computer and then press and hold F10 again to access the utility.

   If you are using a PS/2 keyboard, you might see a keyboard error message. Disregard it.
3. Select **Security** > **Set Up BIOS Power-On Password** and then follow the onscreen instructions.
4. Before exiting, select **Main** > **Save Changes and Exit**.

Entering a power-on password

To enter a power-on password:

1. Restart the computer.
2. When the key icon appears on the monitor, enter the current password, and then press enter.

Type carefully. For security reasons, the characters you enter do not appear on the screen.

If you enter the password incorrectly, a broken key icon appears. Try again. After three unsuccessful tries, you will enter the F10 setup screen with read-only permission. (See the Setup Browse Mode option under the Power-On options.)

Entering an administrator password

If an administrator password has been established on the computer, you will be prompted to enter it each time you run Computer Setup (F10) Utility.

To enter an administrator password:

1. Restart the computer.
2. As soon as the computer is turned on, press and hold F10 until you enter Computer Setup (F10) Utility. Press enter to bypass the title screen, if necessary.

   If you do not press F10 at the appropriate time, you must restart the computer and press and hold F10 again to access the utility.

   If you are using a PS/2 keyboard, you might see a keyboard error message. Disregard it.
3. When the key icon appears on the monitor, enter the administrator password, and press enter.

Type carefully. For security reasons, the characters you enter do not appear on the screen.

If you enter the password incorrectly, a broken key icon appears. Try again. After three unsuccessful tries, you must restart the computer before you can continue.

National keyboard delimiter characters

Each keyboard meets country-specific requirements. The syntax and keys you use for changing or deleting passwords depend on the keyboard included with the computer.

Language	Delimiter	Language	Delimiter	Language	Delimiter
Arabic	/	Greek	-	Russian	/
Belgian	=	Hebrew	.	Slovakian	-
BHCSY*	-	Hungarian	-	Spanish	-
Brazilian	/	Italian	-	Swedish/Finnish	/
Chinese	/	Japanese	/	Swiss	-
Czech	-	Korean	/	Taiwanese	/
Danish	-	Latin American	-	Thai	/
French	!	Norwegian	-	Turkish	.
French Canadian	é	Polish	-	U.K. English	/
German	-	Portuguese	-	U.S. English	/

* Bosnia-Herzegovina, Croatia, Slovenia, and Yugoslavia

Clearing passwords

If you forget the password, you cannot access the computer.

For instructions about clearing passwords, see Configuring password security and resetting CMOS on page 82.

Chassis security

Smart Cover Sensor (optional)

The optional Smart Cover Sensor is a combination of hardware and software technology that alerts you when the side panel of the computer is removed (provided the sensor has been configured in Computer Setup (F10) Utility).

Three levels of protection are available *:

Level	Setting	Description
Level 0	Disabled	Sensor * is disabled (default).
Level 1	Notify User	When the computer restarts, a message indicates that the computer has been opened or the access panel has been removed.
Level 2	Administrator Password	When the computer restarts, a message indicates that the computer has been opened or the access panel has been removed. You must enter the administrator password to continue.

* Smart Cover Sensor settings are changed using Computer Setup (F10) Utility.

Setting the protection level

To set the Smart Cover Sensor protection level:

1. Turn on or restart the computer.
2. During startup, press and hold the F10 key until you enter Computer Setup (F10) Utility. Press enter to bypass the title screen, if necessary.

   NOTE: If you do not press the F10 key at the appropriate time, you must restart the computer, and then press and hold the F10 key again to access Computer Setup (F10) Utility.

   If you are using a PS/2 keyboard, you might see a keyboard error message. Disregard it.

3. Select **Security** > **Smart Cover** > **Cover Removal Sensor**, and follow the on-screen instructions.
4. Before exiting, select **Main** > **Save Changes and Exit**.

Side access panel solenoid lock

The side access panel solenoid lock (available only on specific workstations) secures the side access panel to the chassis. The solenoid is controlled by a local or remote signal.

To lock the solenoid, set a password for the solenoid lock in Computer Setup (F10) Utility. To unlock the solenoid, remove the solenoid lock password in Computer Setup (F10) Utility.

The solenoid lock FailSafe Key (available from HP) is is a device for manually disabling the solenoid lock. You will need the FailSafe Key in case of a forgotten password, power loss, or computer malfunction.

Cable lock (optional)

To prevent theft, you can attach a keyed cable lock to the rear chassis panel. This cable lock attaches to the chassis and secures it to the work area.

Fault notification and recovery

Fault notification and recovery features combine innovative hardware and software technology to prevent the loss of critical data and minimize unplanned downtime.

If the computer is connected to a network that is managed by HP CMS, the computer sends a fault notice to the network management application. With HP CMS, you can also remotely schedule diagnostics to run on managed PCs and create a summary report of failed tests.

ECC fault prediction

When the computer encounters an excessive number of error checking and correcting (ECC) memory errors, it displays a local alert message. This message contains information about the errant DIMM, enabling you to take action before you experience noncorrectable memory errors. ECC DIMMs are standard on this computer.

Thermal sensors

Several thermal sensors in the HP workstation regulate computer fans to maintain an acceptable, efficient chassis temperature.

Programmable power button (Windows only)

With ACPI (Advanced Configuration and Power Interface) enabled, you can customize the behavior of the power button so that rather than powering down, the workstation enters sleep mode (low power state), or hibernate mode (very low power state). This lets you go to standby without closing applications, and then return to the same operational state without any data loss.

Changing the power button configuration (Windows only)

Windows 7 or Windows 10

1. Select **Start**, and then select **Control Panel** > **System and Security** > **Power Options**.
2. On the left side of the screen, select **Choose What the Power Buttons Do**.
3. Select the desired options.

If you choose Sleep or Hibernate, you can press the power button to initiate standby, and then press it again to exit standby and return to your work. To completely turn off the workstation, select **Start** > **Shut Down**.

CAUTION: To reduce the risk of data loss, do not use the power button to turn off the computer unless the system is not unresponsive.

NOTE: If the computer is unresponsive, press and hold the power button for four seconds to completely turn off power to the computer.

Windows 8.1

1. Point to the upper-right or lower-right corner of the Start screen to display the charms.
2. In the Search field, type `control`.
3. On the left side of the screen select **Control Panel**, and then select **System and Security** > **Power Options**.
4. In Power Options Properties, select **Choose What the Power Button Does**.
5. Select the desired options.

3 Component replacement information and guidelines

This chapter provides warnings, cautions, information, and guidelines for removal and replacement procedures. It does not document the step-by-step procedures.

IMPORTANT: **Removal and replacement procedures are now available in videos on the HP website.**

Go to the HP Customer Self Repair Services Media Library at http://www.hp.com/go/sml.

This chapter includes these topics:

Topics
Warnings and cautions on page 42
Service considerations on page 42
Product recycling on page 44
Component replacement guidelines on page 44

Warnings and cautions

WARNING! These symbols on any surface or area of the equipment indicate the following:

Presence of a hot surface or hot component. If this surface is contacted, the potential for injury exists. To reduce the risk of injury from a hot component, let the surface cool before you touch it.

Presence of an electric shock hazard. To reduce the risk of injury from electric shock, do not open any enclosed area marked with this symbol.

To reduce the risk of personal injury, product must always be lifted by two persons.

WARNING! To reduce the risk of electric shock or damage to your equipment:

— Do not disable the power cord grounding plug. The grounding plug is an important safety feature.

— Plug the power cord in a grounded (earthed) outlet that is easily accessible at all times.

— Disconnect power from the equipment by unplugging the power cord from the electrical outlet.

WARNING! To reduce the risk of serious injury, read the *Safety & Comfort Guide*. It describes proper computer setup, posture, health, and work habits for computer users, and provides important electrical and mechanical safety information. This guide is located at http://www.hp.com/ergo.

WARNING! Do not use the front bezel as a handle or lifting point when lifting or moving the computer. Lifting the computer from the front bezel, or lifting it incorrectly, might cause the computer to fall, causing possible injury to you and damage to the computer. To properly and safely lift the computer, lift from the bottom of the computer.

CAUTION: Static electricity can damage the electronic components of the computer. To prevent damage to the computer, observe the following Electrostatic Discharge (ESD) precautions while servicing the computer:

— Before you begin, discharge yourself of static electricity by briefly touching a grounded metal object.

— Work on a static-free mat.

— Wear a static strap to make sure that any accumulated electrostatic charge is discharged from your body to the ground.

— Create a common ground for the equipment you are working on by connecting the static-free mat, static strap, and peripheral units to that piece of equipment.

NOTE: HP accessories are for use in HP Workstation products. They have been extensively tested for reliability and are manufactured to high quality standards.

Service considerations

Tools and software requirements

The tools necessary for computer component removal and installation are:

- Torx T-15 driver
- Flat blade and cross-tip screwdrivers
- Diagnostics software

Electrostatic discharge (ESD) information

Generating static

Different activities generate different amounts of static electricity through electrostatic discharge (ESD). Static electricity increases as humidity decreases.

CAUTION: Static electricity in the amount of 700 volts might degrade a product.

Event	Relative humidity		
	55%	40%	10%
Walking across carpet	7,500 V	15,000 V	35,000 V
Walking across vinyl floor	3,000 V	5,000 V	12,000 V
Motions of bench worker	400V	800 V	6,000 V
Removing bubble pack from PCB	7,000 V	20,000 V	26,500 V
Packing PCBs in foam-lined box	5,000 V	11,000 V	21,000 V

Preventing ESD equipment damage

Many electronic components are sensitive to ESD. Circuitry design and structure determine the degree of sensitivity. The following packaging and grounding precautions are necessary to prevent damage to electronic components and accessories:

- Transport products in static-safe containers such as tubes, bags, or boxes, to avoid hand contact.
- Protect electrostatic parts and assemblies with nonconductive or approved containers or packaging.
- Keep electrostatic-sensitive parts in their containers until they arrive at static-free stations.
- Place items on a grounded surface before removing them from containers.
- Before handling or touching a sensitive component or assembly, ground yourself by touching a grounded metal object.
- Avoid contact with pins, leads, or circuitry.
- Place reusable electrostatic-sensitive parts from assemblies in protective packaging or nonconductive foam.

Personal grounding methods and equipment

Use the following items to help prevent ESD damage:

- **Wrist straps** — These are flexible straps with a maximum of one megohm ± 10% resistance in the ground cords. To provide a proper ground, wear the strap against bare skin. The ground cord must be connected and fit snugly into the banana plug connector on the grounding mat or computer.
- **Heel straps, toe straps, and boot straps** — These can be used at standing computers and are compatible with most types of shoes or boots. On conductive floors or dissipative floor mats, use them on both feet with a maximum of one megohm ± 10% resistance between the operator and ground.

Static shielding materials

Static shielding materials provide the following levels of protection.

Method	Voltage
Antistatic plastic	1,500 V
Carbon-loaded plastic	7,500 V
Metalized laminate	15,000 V

Grounding the work area to prevent static damage

- Cover the work surface with approved static-dissipative material. Use a wrist strap connected to the work surface, and properly grounded tools and equipment.
- Use static-dissipative mats, foot straps, or air ionizers to give added protection.
- Disconnect power and input signals before inserting and removing connectors or test equipment.
- Use fixtures made of static-safe materials when fixtures must directly contact dissipative surfaces.

	• Handle electrostatic-sensitive components, parts, and assemblies by the case or PCB laminate. Handle them only in static-free work areas.	• Keep work area free of conductive materials, such as plastic assembly aids and Styrofoam. • Use field service tools (such as cutters, screwdrivers, and vacuums) that are non-conductive.
Recommended ESD prevention materials and equipment	• Antistatic tape • Antistatic smocks, aprons, and sleeve protectors • Non-conductive bins and other assembly or soldering aids • Non-conductive foam • Non-conductive tabletop computers with a ground cord of one megohm ± 10% resistance • Static-dissipative table or floor mats with a hard-tie to ground • Field service kits	• Static awareness labels • Wrist straps and footwear straps providing one megohm ± 10% resistance • Material-handling packages • Non-conductive plastic bags • Non-conductive plastic tubes • Non-conductive tote boxes • Opaque shielding bags • Transparent metallized shielding bags • Transparent shielding tubes

Product recycling

HP encourages customers to recycle used electronic hardware, HP original print cartridges, and rechargeable batteries.

For information about recycling HP components or products, see http://www.hp.com/go/recycle.

Component replacement guidelines

This section provides information and guidelines for removal and replacement procedures. It does not document the step-by-step procedures.

IMPORTANT: Removal and replacement procedures are now available in videos on the HP website.

Go to the HP Customer Self Repair Services Media Library at http://www.hp.com/go/sml. In Media Selection, choose the **Desktops & Workstations** product category and the **Personal Workstations** product family, then choose your platform

This chapter provides guidelines for removal and replacement procedures.

Battery on page 45

Cable management on page 45

CPU (processor) and CPU heatsink on page 46

Expansion slots on page 47

Hard drives and optical disc drives on page 51

Memory on page 53

Power supply specifications on page 56

System board on page 57

Battery

The battery that comes with the computer provides power to the real-time clock and has a minimum lifetime of about three years. Observe the following warning and caution when replacing the battery.

WARNING! HP Z Series Workstations use lithium batteries. There is a risk of fire and chemical burn if the battery is handled improperly. Do not disassemble, crush, puncture, short external contacts, dispose of in water or fire, or expose battery to temperatures higher than 60°C (140°F).

CAUTION: Before removing the battery, back up the CMOS settings in case they are lost when the battery is removed. Use Computer Setup (F10) Utility to back up the settings.

NOTE: Do not dispose of batteries, battery packs, and accumulators with general household waste.

Cable management

Proper routing of the internal cables is critical to the operation of the workstation. Follow good cable management practices when removing and installing components.

- Handle cables with care to avoid damage.
- Apply only the tension required to seat or unseat cables during insertion or removal from the connector.
- When possible, handle cables by the connector or pull-strap.
- Route cables in such a way that they cannot be caught or snagged by parts being removed or replaced.
- Keep cables away from direct contact with major heat sources, such as the heatsink. (Some air flow guides have a cable guide that lets you route cables safely around the heatsink.)
- Do not jam cables on top of expansion cards or DIMMs. Circuit cards and DIMMs are not designed to take excessive pressure.
- Keep cables clear of movable or rotating parts (such as the power supply and drive cage) to prevent them from being cut or crimped when the component is lowered into its normal position.
- In all cases, avoid bending or twisting the cables. Do not bend any cable sharply. A sharp bend can break the internal wires.
- Never bend a SATA data cable tighter than a 30 mm (1.18 in) radius.
- Never crease a SATA data cable.
- Do not rely on components like the drive cage, power supply, or computer cover to push cables down into the chassis. Always position the cables to lay properly by themselves or in the cable guides and chassis areas designed for cable routing.

When removing the power supply power cable from the connector on the system board, always follow these steps:

1. Squeeze on the top of the retaining latch attached to the cable end of the connector.
2. Grasp the cable end of the connector and pull it straight out.

CAUTION: Always pull the connector — NEVER pull on the cable. Pulling on the cable could damage the cable and result in a failed power supply.

CPU (processor) and CPU heatsink

⚠ **CAUTION:** Observe the following cautions when removing or replacing the heatsink.

— When removing the heatsink, loosen all screws a little at a time to make sure the CPU remains level. Do *not* fully loosen one screw, and then move on to the next.

— After you remove the CPU heatsink from the chassis, use alcohol and a soft cloth to clean the thermal compound residue from the CPU and the heatsink, allowing the alcohol on the CPU and CPU heatsink to dry completely.

— If you are reusing the original heatsink, apply thermal compound to the center of the CPU top surface.

— If you are using a new CPU heatsink, do not apply thermal compound to the CPU because the new heatsink already has thermal compound applied to the heatsink surface. Instead, remove the thermal compound protective liner from the bottom of the new heatsink.

— Do not overtighten the heatsink screws. Overtightening can strip the threads in the chassis.

— Do not fully tighten one screw and then move on to the next. Instead, tighten all screws a little at a time, ensuring that the CPU remains level.

CAUTION: Observe the following cautions when removing or replacing the CPU.

— If you are installing a second CPU, it must be of the same type as the first CPU.

— Internal components might be powered even when the computer is off. To prevent damage, disconnect the computer power cord before you remove or install a component.

— The CPU socket contacts and pads are extremely fragile. Do not touch the CPU socket contacts or the gold pads underneath the CPU. Use extreme care and handle the CPU only by the edges.

— The CPU socket contacts are delicate and bend easily. To avoid bending the contacts, use extreme care when installing the CPU in the socket.

— Installing a processor incorrectly can damage the system board. Contact an HP authorized reseller or service provider to install the processor. If you plan to install the processor yourself, view the entire remove and replace video before you begin.

— Failure to follow the computer preparation instructions can result in an improperly installed processor, causing extensive computer damage.

Expansion slots

This section identifies and describes computer expansion card slots, and presents card configuration information.

Go to http://www.hp.com/go/quickspecs to learn which graphics cards are supported in the workstation, how much memory each graphics card includes, and graphics card power requirements.

Card configuration restrictions for power supplies

⚠ **CAUTION:** To prevent damage, the overall power consumption of the computer (including I/O cards, CPU, and memory) must not exceed the maximum rating of the computer power supply. For power supply information, see Power supply specifications on page 56.

Choosing an expansion card slot

Whenever possible, use the following tips to help you select the proper slot for an expansion card:

- Use the PCIe x16 slot for the primary graphics card. If you do not use this slot for the graphics card, only cards certified as After Market Options are supported.
- Install a second graphics card in the other PCIe x16 slot.
- Install a card in a slot that most closely matches its interface technology:
  - Install a PCIe Gen1 x16 or a PCIe Gen1 x8 card in the PCIe Gen3 x16 slot.
  - Install a PCIe Gen1 x4 card in the PCIe Gen2 x4 slot.
  - Install a PCIe Gen1 x1 card in the PCIe Gen2 x1 slot.
  - Install a PCI card in the PCI slot.
  - Whenever possible, install a PCIe x1 card in an x1 slot.
- Leave as much space as possible between cards (especially graphics cards) to allow heat to dissipate more efficiently.
- For best operational efficiency, select a slot that:
  - Electrically matches the number of PCIe card lanes (for example, x1 in an x1 slot).
  - Has more lanes electrically.
  - Has fewer lanes, but is closer to your needs. For example, place an x16 card in an x4 slot, and an x4 card in a an x1 slot.
- An x1 connector supports an x1 card only. While an x1 card can be inserted into a larger slot, this may limit potential future card placement.

SFF workstation slot identification and description

Maximum power used by all slots must not exceed total system power and is subject to configuration limitations.

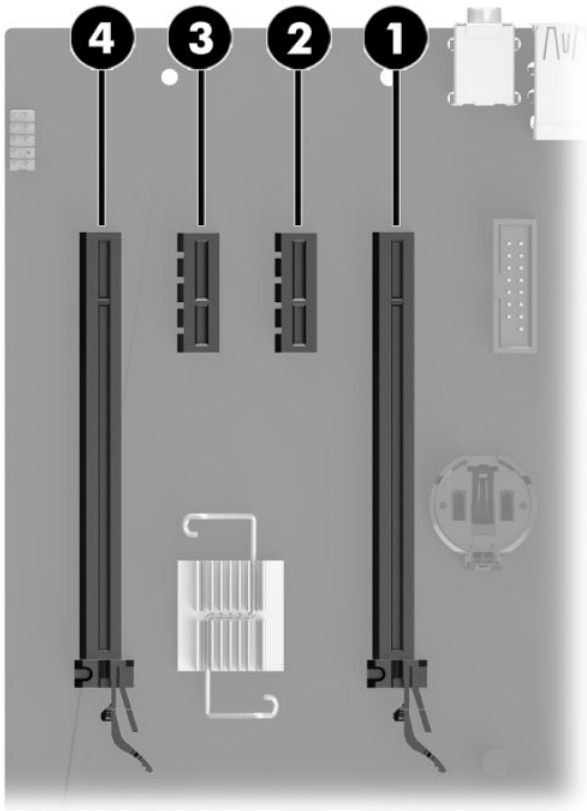

Slot	Type	Mechanical compatibility	Electrical compatibility
4	PCIe3 x16	x16	x16
3	PCIe3 x1	x1	x1
2	PCIe3 x1	x1	x1
1	PCIe3 x16(4)	x16	x4

NOTE: The PCIe designators indicate the mechanical connector size and number of electrical PCIe lanes routed to an expansion slot. For example, x16(4) means that the expansion slot is mechanically a x16 length connector, with 4 PCIe3 lanes supported.

SFF workstation installation sequence recommendations

Load order	Card description	Slot 1	Slot 2	Slot 3	Slot 4	Native M.2
1	PCIe graphic card	Only				
2	Second PCIe graphic card				Only	
3	Internal PCIe storage					Only
4	Second internal PCIe storage				Only	
5	Thunderbolt card				Only	
6	PCIe NIC card		1st	2nd	3rd	
7	Serial port (cable)		3rd	2nd	1st	
8	HP USB 3.1 Type-C PCI-E x1 card		2nd	1st	3rd	
9	PCIe parallel port card		1st	2nd	3rd	
10	1394b FireWire PCIe Card		1st	2nd	3rd	

NOTE: Slot sequenced from the rear I/O aperture to the board edge.

Tower workstation slot identification and description

Maximum power used by all slots must not exceed total system power and is subject to configuration limitations.

Slot	Type	Mechanical compatibility	Electrical compatibility
5	PCIe3x1	x1	x1
4	PCIe3x16	x16	x16
3	PCIe3x4	x4	x4
2	PCIe3x16(4)	x16	x4
1	PCI (optional)	PCI	PCI

NOTE: The PCIe designators indicate the mechanical connector size and number of electrical PCIe lanes routed to an expansion slot. For example, x16(4) means that the expansion slot is mechanically a x16 length connector, with 4 PCIe3 lanes supported.

Slot two is the primary graphics slot; slot four is the secondary graphics slot.

Tower workstation installation sequence recommendations

Load order	Card description	Slot 1 (x1)	Slot 2 (x16)	Slot 3 (x4)	Slot 4 (x16[x4])	Slot 5 (PCI)	Native M. 2 (x4)
1	PCIe graphic card		Only				
2	Second PCIe graphic card				Only		
3	Internal PCIe storage						Only
4	Second internal PCIe storage			Only			
5	Thunderbolt card			2nd	1st		
6	PCIe NIC card	1st		3rd	2nd		
7	PCIe NIC card – 10G				Only		
8	Serial port (cable)	4th		3rd	2nd	1st	
9	eSATA kit (cable)	4th		3rd	2nd	1st	
10	PCIe parallel port card	1st		3rd	2nd		
11	1394b FireWire PCIe card	1st		3rd	2nd		
NOTE:	Slot sequenced from the rear I/O aperture to the board edge.						

Hard drives and optical disc drives

Handling hard drives

⚠ **CAUTION:** Take proper precautions when handling hard drives to prevent loss of work and damage to the computer or drive.

- Do not remove hard drives from the shipping package for storage. Keep hard drives in their protective packaging until they are mounted in the computer.
- Always shut down the operating system, turn off the power, and unplug the power cord. Never remove a drive while the computer is on or in standby mode.
- Before handling a drive, make sure you discharge static electricity. While handling a drive, avoid touching the connector.
- Handle a drive carefully. Do not drop it from any height.
- To prevent possible ESD damage when the drive is installed, connect the drive power cable before connecting the data cable. This discharges accumulated static electricity through the drive power cable to the computer chassis.
- Do not use excessive force when inserting a drive.
- Avoid exposing a hard drive to liquids, temperature extremes, or products that have magnetic fields such as monitors or speakers.
- If you must mail a drive, use a bubble-pack mailer or other protective packaging and label the package “Fragile: Handle With Care.”

Removal and replacement tips

- To verify the type, size, and capacity of the storage devices installed in the computer, run **Computer Setup (F10) Utility**.
- Adding a new drive may require that you make new connections from the drive to the system board. Note that:
  - The primary Serial ATA (SATA) hard drive must be connected to the dark blue primary SATA connector on the system board labeled SATA0.
  - Connect a secondary hard drive to SATA1.
  - Connect SATA optical drives to the black SATA2 connector.
  - Connect an optional eSATA adapter cable to the black ESATA connector SATA3 on the system board. (Tower only)
  - Connect a media card reader USB cable to the USB connector on the system board labeled MEDIA. If the media card reader has a 1394 port, connect the 1394 cable to the 1394 PCI card.

Drive installation and cabling scenarios

This section presents cabling guidelines for the most common maximum storage configurations. If you add or remove drives, HP recommends you follow these guidelines for highest drive performance and efficient cable routing.

SFF workstations—SATA cable connection guidelines

Configuration / PCA SATA connector	SATA 0	SATA 1	SATA 2	SATA 3
HDD x1 ODD x1	1st HDD		1st ODD	
HDD x2 ODD x1	1st HDD	2nd HDD	1st ODD	
HDD x3 ODD x1	1st HDD	2nd HDD	1st ODD	3rd HDD

Tower workstations—SATA cable connection guidelines

Configuration / PCA SATA connector	**SATA 0**	**SATA 1**	**SATA 2**	**SATA 3**
HDD x1 ODD x1	1st HDD		1st ODD	e-SATA
HDD x1 ODD x2	1st HDD		1st ODD	2nd ODD
HDD x2 ODD x1	1st HDD	2nd HDD	1st ODD	e-SATA
HDD x2 ODD x2	1st HDD	2nd HDD	1st ODD	2nd ODD
HDD x3 ODD x1	1st HDD	2nd HDD	1st ODD	3rd HDD

Memory

Supported DIMM configurations

NOTE: Mirroring and DIMM sparing are not supported.

Platform	Configuration
SFF	• Four DIMM slots • Unbuffered ECC/nECC DIMMS only • Maximum capacity: 64 GB
Tower	• Four DIMM slots • Unbuffered ECC/nECC DIMMS only • Maximum capacity: 64 GB

BIOS errors and warnings

The BIOS generates warnings/errors on invalid memory configurations:

- If the BIOS can find a valid memory configuration by disabling plugged-in memory, it does so and reports a warning during POST. the workstation can still be started. The warning will indicate the location of the failed DIMM on the system board.
- If there is no way for the BIOS to obtain a valid memory configuration by disabling plugged-in memory, the BIOS halts with a diagnostics 2006 code for memory error (five beeps and blinks).

DIMM installation guidelines

- Install only HP-approved DDR3 DIMMs

  CAUTION: HP ships only DIMMs that are electrically and thermally compatible with this workstation. Because third-party DIMMs might not be electrically or thermally compatible, they are not supported by HP.

- Install only HP-approved DDR3 DIMMs. See http://www.hp.com/go/quickspecs to find DIMMs that are compatible with the workstation.
- Do not intermix DIMMs of different technologies. ECC Unbuffered DIMMs (UDIMMs), Registered DIMMs (RDIMMs), and Load Reduced DIMMs (LRDIMMs) are supported on your workstations. Supported DIMM configurations on page 53 specifies which technologies are supported on each platform.

CAUTION: DIMMs and their sockets are keyed for proper installation. To prevent socket or DIMM damage, align these guides properly when installing DIMMs.

SFF workstation DIMM installation order

Install DIMMs in this order.

NOTE: If you install DIMMs of different sizes, load them in order of size, starting with largest and finishing with the smallest (largest in DIMM 1, smallest in last loaded DIMM).

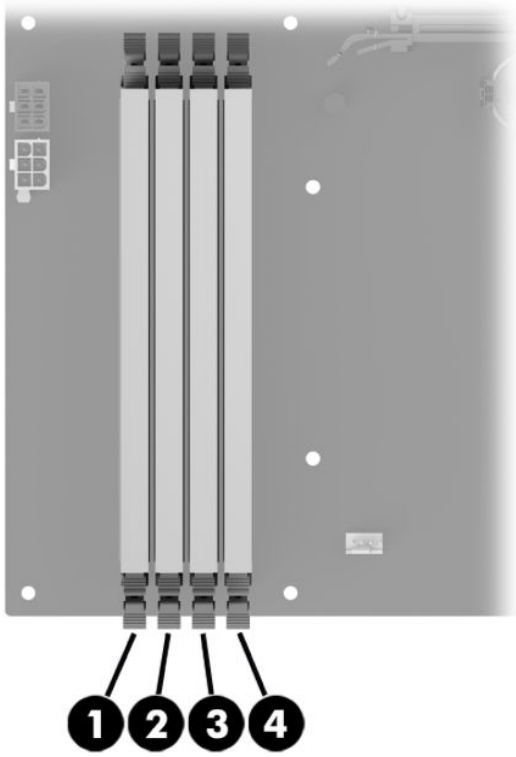

Tower workstation DIMM installation order

Install DIMMs in this order.

NOTE: If you install DIMMs of different sizes, load them in order of size, starting with largest and finishing with the smallest (largest in DIMM 1, smallest in last loaded DIMM).

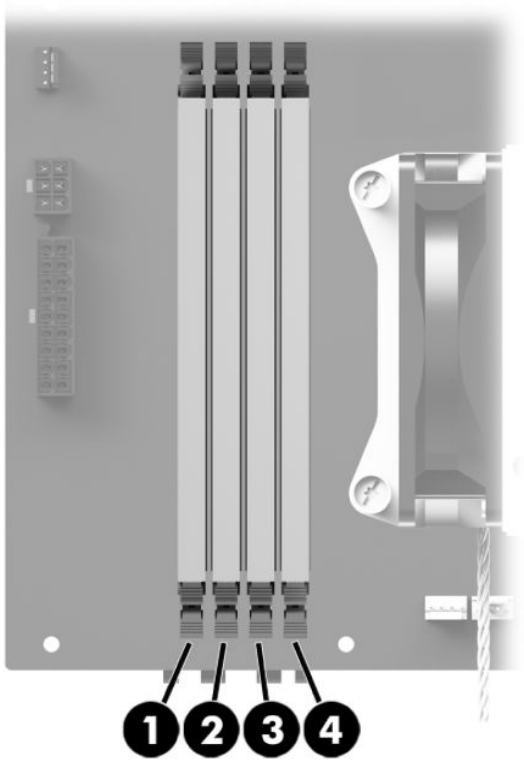

Power supply

Power supply specifications

All power supplies have these specifications:

- Wide-ranging, active Power Factor Correction (PFC)
- ENERGY STAR® qualified
- FEMP Standby Power compliant @115V (<1W in S5 – Power Off)
- Surge tolerant (withstands power surges up to 2000V)

	SFF	Tower	SFF	Tower
Power supply	240 W 92% efficient	400 W 92% efficient	200 W 85% efficient	280 W 90% efficient
Operating voltage range	90–264 VAC	90–264 VAC	90–264 VAC	90–264 VAC
Rated voltage range	100–240 VAC	100–240 VAC	100–240 VAC	100–240 VAC
Rated line frequency	50–60 Hz	50–60 Hz	50–60 Hz	50–60 Hz
Operating line frequency range	47–63 Hz	47–66 Hz	47–63 Hz	47–63 Hz
Rated input current	4A @100–240 VAC	5.2A @ 100–240 VAC	3A @100–240 VAC	3.6A @ 100–240 VAC
Heat dissipation, typical (configuration and software dependent)	423.5 btu/hr (106.8 kcal/hr)	782.6 btu/hr (197.4 kcal/hr)	423.5 btu/hr (106.8 kcal/hr)	782.6 btu/hr (197.4 kcal/hr)
Heat dissipation, maximum (configuration and software dependent)	645.79 btu/hr (162.87 kcal/hr)	996.16 btu/hr (251.23 kcal/hr)	645.79 btu/hr (162.87 kcal/hr)	996.16 btu/hr (251.23 kcal/hr)
Power supply fan *All fans are variable speed*	One fan, 70mm x 25mm	One fan, 80mm x 25mm	One fan, 70mm x 25mm	One fan, 80mm x 25mm
Built-in Self Test LED	No	Yes	No	No
Power consumption in sleep mode	<5 W	<5 W	<5 W	<5 W

IMPORTANT: If you install a discrete graphics card in the unit, you must use the 400 W power supply. The P6 connector on this power supply must be inserted into the graphics card.

Power consumption and heat dissipation

Power consumption and heat dissipation specifications are available for multiple configurations. To review available specifications, go to http://www.hp.com/go/quickspecs.

To reach zero power consumption, unplug the workstation from the power outlet or use a power strip with an on/off switch. For additional information about power-saving features, see the operating system installation instructions.

This product is in compliance with U.S. Executive Order 13221.

Resetting the power supply

If an overload triggers the power supply overload protection, power is immediately disconnected.

To reset the power supply:

1. Disconnect the power cord from the workstation.
2. Determine what caused the overload and fix the problem. For troubleshooting information, see Diagnostics and troubleshooting on page 60.
3. Reconnect the power cord and restart the workstation.

When you turn off the workstation through the operating system, power consumption falls below what is considered low power consumption but does not reach zero. This low power consumption feature extends the life of the power supply.

System board

If you replace the system board:

- Make a note of the cable connections before disconnecting them from the system board.
- Follow good cable management practices. See Cable management on page 45.

The following tables show system cabling for the workstations.

System cabling

SFF workstation system cabling

See System board components on page 5 to determine the location of system board connectors.

Cable	To	Cable designator on system board
PSU cable	PCA (Main power)	P1 (White)
PSU cable	PCA (PWR COMM)	P2 (White)
PSU cable	PCA (CPU power)	P3 (White)
SATA power cable	PCA	P160 (Black)
SATA power cable	First ODD	P12 (Black)
SATA power cable	Other drive	P13 (Black)
SATA power cable	SSD	P15 (Black)
SATA power cable	First HDD	P16 (Black)
Speaker	PCA	P6 (White)
Cooler fan cable	PCA	P8 (White)
System fan cable	PCA	P11 (Brown)
Front audio cable	PCA	P23 (Blue)
LED/Power button cable	PCA	P5 (Black)
Front USB 2.0 cable-1	PCA	P24 (Yellow)
Front USB 3.0 cable-2	PCA	P26 (Blue)
Serial cable	PCA	P52 (Black)
Chassis solenoid lock	PCA	P124 (Black)
Hood sensor	PCA	P125 (White)
SATA cable	First HDD	SATA0 (Blue)
SATA cable	Second HDD	SATA1 (Black)
SATA cable	First ODD	SATA2 (Black)
SATA cable	Third HDD	SATA3 (Black)

Tower workstation system cabling

See System board components on page 11 to determine the location of system board connectors.

Cable	To	Cable designator on system board
PSU cable	PCA (Main Power)	P1 (White)
PSU cable	PCA (PWR COMM)	P2 (White)
SATA power cable	PCA (CPU Power)	P3 (White)
SATA power cable	First hard drive (Bay 4)	P15 (Black)
SATA power cable	Second hard drive (Bay 5)	P16 (Black)
SATA power cable	Third hard drive (Bay 6)	P17 (Black)
SATA power cable	First optical drive (Bay 3)	P12 (Black)
SATA power cable	Other drive (Bay 2)	P13 (Black)
PSU cable	Second optical drive (Bay 1)	P14 (Black)
PSU cable	First graphics card	P4 (Black)
Speaker	PCA	P6 (White)
Cooler fan cable	PCA	P8 (White)
System fan cable	PCA	P11 (Brown)
Front audio cable	PCA	P23 (Blue)
Front LED/Power button cable	PCA	P7 (Black)
Front USB 2.0 cable	PCA	P24(Yellow)
Front USB 3.0 cable	PCA	P26 (Blue)
Serial cable (optional)	PCA	P52 (Black)
Hood sensor	PCA	P125 (White)
Chassis solenoid lock	PCA	P124 (Black)
SATA cable	First HDD	SATA0 (Blue)
SATA cable	Second HDD	SATA1 (Black)
SATA cable	FIrst ODD	SATA2 (Black)
SATA cable	Third HDD	SATA3 (Black)
eSATA bracket cable (optional)	First external SATA device	SATA3 (Black)
SATA power cable	SATA device	P160 (Black)

4 Diagnostics and troubleshooting

This chapter describes the tools available for diagnosing and troubleshooting system issues.

Topics
Calling support on page 60
Locating ID labels on page 61
Locating warranty information on page 61
Diagnosis guidelines on page 61
Troubleshooting checklist on page 62
HP troubleshooting resources and tools on page 63
Troubleshooting scenarios and solutions on page 66
Using HP PC Hardware Diagnostics (UEFI) on page 73
Interpreting system validation diagnostic front panel LEDs and audible codes on page 80

Calling support

At times you might encounter an issue that requires support. Before you call support, do the following:

- Have the workstation readily accessible.
- Write down the workstation serial numbers, product numbers, model names, and model numbers and have them in front of you.
- Note any applicable error messages.
- Note any add-on options.
- Note the operating system.
- Note any third-party hardware or software.
- Note the details of any blinking LEDs on the front of the workstation (tower and desktop configurations) or on the side of the workstation (all-in-one configurations).
- Note the applications you were using when you encountered the problem.

NOTE: When calling in for service or support, you might be asked for the product number (example: PS988AV) of the workstation. If the workstation has a product number, it is generally located next to the 10- or 12-digit serial number of the workstation.

NOTE: On most models, the serial number and product number labels can be found on the top or side panel and at the rear of the workstation (tower and desktop configurations) or on a pull-out card on the side of the display (all-in-one configurations).

For a listing of all worldwide support phone numbers, go to http://www.hp.com/support and select your region. Under **Contact HP**, select **All HP Contacts**. Follow the instructions to locate the appropriate phone number.

Locating ID labels

To assist in troubleshooting, identification labels are available on each workstation.

- All workstations have a serial number (unique for each workstation) and product number. Have these numbers available when you contact support.
- The Certificate of Authentication (COA) is used for Windows 7-preinstalled systems only.
- A service label shows the build ID and Feature Byte strings, which are needed for system board replacement.

NOTE: Your workstation may look slightly different from the illustration in this section.

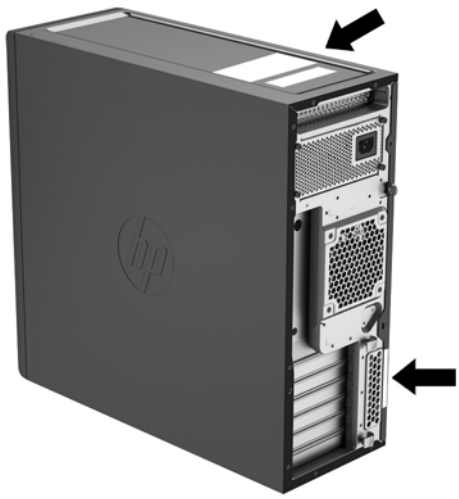

Locating warranty information

To locate warranty information, go to http://www.hp.com/support/warranty-lookuptool.

To locate an existing Care Pack, go to http://www.hp.com/go/lookuptool.

To extend a standard product warranty, go to http://www.hp.com/hps/carepack. HP Care Pack Services offer upgraded service levels to extend and expand a standard product warranty.

Diagnosis guidelines

If you encounter a problem with the computer, monitor, or software, the following sections provide a list of general suggestions that help you isolate and focus on the problem before taking further action.

Diagnosis at startup

- Verify that the computer and monitor are plugged into a working electrical outlet.
- Remove all CDs, or USB drive keys from your system before turning it on.

- Verify that the computer is turned on and the blue power light is blue (normal operation) and not red (error state).
- If you have installed an operating system other than the factory-installed operating system, check to be sure that it is supported on your system, go to http://www.hp.com/go/quickspecs.
- Verify that the monitor is turned on and the green monitor light is on. Note that not all monitors are equipped with LED lights to indicate their functionality.
- Turn up the brightness and contrast controls of the monitor if the monitor is dim.

Diagnosis during operation

- Look for blinking LEDs on the side of the computer. The blinking lights are error codes that will help you diagnose the problem. Refer to the Interpreting system validation diagnostic front panel LEDs and audible codes on page 80 section of this document for information on interpreting diagnostic lights and audible codes.
- Check all cables for loose or incorrect connections.
- Wake the computer by pressing any key on the keyboard or the power button. If the system remains in suspend mode, shut down the system by pressing and holding the power button for at least four seconds, then press the power button again to restart the system. If the system does not shut down, unplug the power cord, wait a few seconds, then plug it in again. If it does not restart, press the power button to start the computer.
- Reconfigure the computer after installing a non–plug and play expansion board or other option.
- Be sure that all required device drivers have been installed. For example, if you have connected a printer, you must install a printer driver.
- If you are working on a network, plug another computer with a different cable into the network connection. There might be a problem with the network plug or cable.
- If you recently added new hardware, remove the hardware and verify if the computer functions properly.
- If you recently installed new software, uninstall the software and verify if the computer functions properly.
- If the screen is blank, plug the monitor into a different video port on the computer if one is available. Alternatively, replace the monitor with a monitor that you know is working properly.
- Upgrade the BIOS. A new release of the BIOS might have been released that supports new features or fixes your problem.
- Press the caps lock key. If the caps lock LED toggles on or off, the keyboard is operating correctly.

Troubleshooting checklist

Before running diagnostic utilities, make sure that the following conditions are met:

- The computer is connected to a working electrical outlet and powered on, and the power light is illuminated.
- The monitor (for tower or desktop configurations) is connected to a working electrical outlet and powered on, and the power light is illuminated.
- The monitor brightness and contrast are properly adjusted.
- The keyboard is operating correctly (press and hold any key and listen for a beep).
- All cables are properly connected.

- All necessary device drivers are installed.
- All external media (such as optical disks or USB drive keys) are removed before startup.
- The latest version of BIOS, drivers, and software are installed.

HP troubleshooting resources and tools

This section provides information to guide you in troubleshooting your system.

Online support

Online support resources include web-based troubleshooting tools, technical knowledge databases, driver and patch downloads, online communities, and product change notification services.

The following websites are also available to you:

- http://www.hp.com—Provides useful product information.
- http://www.hp.com/support/workstation_manuals—Provides the latest online documentation.
- http://www.hp.com/go/workstationsupport—Provides technical support information for workstations.
- http://www8.hp.com/us/en/contact-hp/phone-assist.html—Provides a listing of the worldwide technical support telephone numbers. Select your region.
- http://www.hp.com/support/workstation_swdrivers—Provides access to software and drivers for workstations.

HP Support Center

To help you troubleshoot problems yourself, HP provides the HP Support Center. The HP Support Center is a portal to an extensive selection of online tools. To access the HP Support Center, complete the following steps:

1. Go to http://www.hp.com/go/workstationsupport.
2. Search for your product.

HP Chat Support

HP Chat Support is a set of web-based support tools that automate and speed up the resolution of problems concerning desktop computing, tape storage, and printing.

HP Chat Support enables you to electronically submit a support ticket to HP over the web. When you submit a support ticket, HP Chat Support collects information about the workstation and passes it to an online support specialist. The collection of information might take up to 30 seconds, depending on the workstation configuration. When you submit a support ticket, you receive a confirmation message containing your case ID, the support hours for your location, and the estimated time of response.

For more information about HP Chat Support, go to http://instantsupport.hp.com/.

NOTE: This feature is not available for Linux.

Customer Advisories, Customer and Security Bulletins, and Customer Notices

To find advisories, bulletins, and notices:

1. Go to http://www.hp.com/go/workstationsupport.
2. Search for your product.
3. On the product page, select the tab **Top Issues and Solutions**.

Product Change Notifications

Product Change Notifications (PCNs) are proactive notifications for product changes occurring within a 30- to 60-day window of the effective date of the change in the manufacturing process. PCNs give customers advance notice of changes to their product, such as an updated BIOS version that they might need to decide whether to download prior to the change taking place. To view a list of PCNs, go to the **Advisories, Bulletins & Notices** page for your product.

Helpful hints

If you encounter a problem with the workstation, monitor, or software, the following general suggestions might help you isolate and focus on the problem before taking further action.

At startup

- Verify that the workstation is plugged into a functional AC outlet.
- Remove all optical discs and USB flash drives before starting the workstation.
- Verify that the workstation is on and the power light is on.
- If you have installed an operating system other than the factory-installed operating system, confirm that it is supported on your system by going to http://www.hp.com/go/quickspecs.
- Verify that the internal display panel is lit.
- If the internal display panel is dim, turn up the brightness.
- If you have an external monitor:
  - Verify that the monitor is plugged into a functional AC outlet.
  - Verify that the monitor is on and the green monitor light is on.
  - If the monitor is dim, turn up the brightness and contrast controls.

During operation

- Beeps and blinking lights on the workstation are error codes that can help you diagnose problems. For more information on interpreting these codes, see the *Diagnostic LED and audible (beep) codes* section in the *Maintenance and Service Guide* for your workstation.
- Press and hold any key. If the system beeps, your keyboard is operating correctly.
- Check all cables for loose or incorrect connections.
- Wake the workstation by pressing the power button or any key on the keyboard. If the system remains in suspend mode, shut down the system by pressing and holding the power button for at least four seconds. Then press the power button again to restart the system.

  If the system does not shut down, unplug the power cord, wait a few seconds, and then plug it in again. If the system does not restart, press the power button.
- After installing a non-PnP expansion board or other option (such as a diskette drive), restart the workstation.

- Be sure that all required device drivers have been installed. For example, if you have connected a printer, you must install a printer driver.
- If you are working on a network, use another cable to plug your workstation into the network connection. If you still cannot connect, there might be a problem with the network plug.
- If you recently added new hardware, remove the hardware to see whether the workstation functions properly.
- If you recently installed new software, uninstall the software to see whether the workstation functions properly.
- If the internal display panel on an all-in-one workstation is blank, open the workstation and be sure that both ends of the cable between the system board and the internal display panel are connected. If you are using a graphics card, verify that the card is properly installed.
- Upgrade the BIOS. A new release of the BIOS might have been released that supports new features or fixes your problem.
- For more detailed information, see the troubleshooting chapter in the *Maintenance and Service Guide* at http://www.hp.com/support/workstation_manuals.

Customer Self Repair

Under the Customer Self Repair programs, you can order a replacement part and install the part without on-site HP technical assistance. Customer Self Repair might be required for some components. For more information, go to http://www.hp.com/go/selfrepair and select your product.

NOTE: Some components are not eligible for Customer Self Repair and must be returned to HP for service. Call support for further instructions before attempting to remove or repair these components.

Troubleshooting scenarios and solutions

This section presents troubleshooting scenarios and possible solutions for a Windows-based system.

Solving minor problems

Problem	Cause	Possible Solution
Workstation appears frozen and does not shut down when the power button is pressed.	Software control of the power switch is not functional.	1. Press and hold the power button for at least four seconds until the computer shuts down. 2. Disconnect the electrical plug from the outlet. 3. Restart the computer.
Workstation seems to be frozen.	Program in use has stopped responding to commands.	1. If possible, use the Windows Task Manager to isolate and terminate the offending process. 2. Attempt the normal Windows shutdown procedure. 3. Restart the computer using the power button.
Workstation date and time display is incorrect.	Real-time clock (RTC) battery might need replacement.	1. Reset the date and time in the Control Panel. 2. Replace the RTC battery.
Workstation appears to pause periodically.	Network driver is loaded and no network connection is established.	Establish a network connection, or use Computer Setup (F10) Utility or Microsoft Windows Device Manager to disable the network controller.
Cursor does not move using the arrow keys on the keypad.	num lock is on.	Press num lock. The num lock key can be disabled or enabled in Computer Setup (F10) Utility.
Poor performance is experienced.	Processor is hot.	1. Verify that airflow to the computer is not blocked. 2. Verify that chassis fans are connected and working properly. Some fans operate only when needed. 3. Verify that the processor heatsink is installed properly.
	Hard drive is full.	Transfer data from the hard drive to create more space on the hard drive.
Workstation powered off automatically and the Power LED flashes red 2 times (once every second), followed by a 2-second pause, and then two simultaneous beeps sounded.	Processor thermal protection is activated. A fan might be blocked or not turning. OR The processor heatsink is not properly attached to the processor.	1. Verify that the computer air vents are not blocked. 2. Open the access panel and press the computer power button. 3. Verify that the system fan is running. 4. Verify that the processor heatsink fan spins. If the fan is not spinning, verify that the heatsink fan cable is plugged into the system board connector and that the heatsink is properly seated. 5. Replace the processor heatsink.
System does not turn on, and the LEDs on the front of the computer are not flashing.	System cannot power on.	Press and hold the power button for less than four seconds. If the hard drive LED turns green: 1. To find a faulty device, remove all devices one at a time: a. Disconnect AC power to the computer. b. Remove a device. c. Reconnect AC power and turn on the computer.

Problem	Cause	Possible Solution
		2. Repeat this process until the faulty device is identified. Remove the graphics card last. Replace the faulty device. 3. If no faulty device is found, replace the system board. OR 1. Press and hold the power button for *less than* four seconds. If the hard drive LED does not illuminate: a. Verify that the computer is plugged into a working AC outlet. b. Verify that the power button harness is connected to the inline front panel I/O device assembly connector. 2. Verify that the power supply unit (PSU) cables are connected to the system board. 3. Verify power supply unit PSU functionality (Tower only): a. Disconnect the AC power. b. Unplug cables connected to the system board. c. Reconnect AC power • If the PSU fan spins and the BIST LED illuminates, the PSU is good; replace the system board. • If the PSU fan does not spin or the LED does not illuminate, replace the PSU.

Solving hard drive problems

Problem	Cause	Solution
Hard drive error	Hard drive has bad sectors or has failed.	Locate and block the usage of bad sectors. If necessary, reformat the hard drive. If the drive is detected by the UEFI, run F2 Diagnostics Drive Test.
Disk transaction problem	The directory structure is bad, or there is a problem with a file.	1. Open Windows Explorer and select a drive. 2. Right click on the drive and select **Properties > Tools**. 3. Under Error-checking, select **Check Now**.
Drive not found (identified)	Improper cable connection	On computers with discrete data and power cables, make sure that the data and power cables are securely connected to the hard drive. (See the *Hard drive* section of this guide for connection details.)
	Improperly seated hard drive	On systems with blind-mate drive connections, check for connector damage on the drive and in the chassis. Reseat the hard drive and its carrier in the chassis to make sure that a proper connection. (See the *Hard drive* section of this guide for connection details.)

Problem	Cause	Solution
	The system might not have automatically recognized a newly installed device.	1. Run Computer Setup (F10) Utility. 2. If the system does not recognize the new device, verify that the device is listed in Computer Setup (F10) Utility. If it is listed, the probable cause is a driver problem. If it is not listed, the probable cause is a hardware problem. 3. If this drive is newly installed, enter **Setup** and try adding a POST delay under **Advanced** > **Boot Options**.
	Drive responds slowly immediately after power-up.	Run Computer Setup (F10) Utility and increase the POST Delay in **Advanced**.> **Boot Options**
Non-system disk or NTLDR missing message	System is trying to start from nonbootable media.	Remove the optical disc or USB drive.
	System is trying to start from a damaged hard drive.	1. Insert a bootable system optical disc or USB drive and restart the computer. 2. If the hard drive is still inaccessible and MBR Security is enabled, try restoring the previously saved MBR image by entering Setup and selecting **Security** > **Save/ Restore MBR of the system hard drive**.
	System files missing or not properly installed.	1. Insert a bootable system optical disc or USB drive and restart. 2. Verify that the hard drive is partitioned and formatted. 3. Install the system files for the appropriate operating system, if necessary.
	Hard drive boot disabled in Computer Setup.	Run Computer Setup (F10) Utility and enable the hard drive entry in the **Advanced > Boot Options** list.
Workstation will not start.	Hard drive is damaged.	Replace the hard drive.

Solving display problems

These suggestions apply to monitors connected to desktop and tower configurations, and to external monitors connected to all-in-one configurations.

Problem	Cause	Solution
Blank screen (no video).	The cable connections are not correct.	Verify the cable connections from the monitor to the computer and to a working electrical outlet.
	The monitor is off.	Turn the monitor on (LED is on). You might need to refer to the monitor manual for an explanation of LED signals.
	Screen blanking utility installed or energy saver features enabled.	Press a key or the mouse button and, if set, enter your password.
	System ROM is bad; system is running in FailSafe Boot Block mode (indicated by 8 beeps).	Reflash the ROM using a SoftPaq.
	Fixed-sync monitor does not sync at the resolution specified.	Verify that the monitor can accept the same horizontal scan rate as the resolution specified.
	Computer is in Hibernate mode.	Press the power button to resume from Hibernate mode.
	Workstation monitor settings are not compatible with the monitor.	1. When you see **Press f8** in the bottom-right corner of the screen, restart the computer and press f8 during startup. 2. Using the keyboard arrow keys, select **Enable VGA Mode**, and then press enter. 3. For Windows, double-click the **Display** icon in the Control Panel and then select the **Settings** tab. 4. Use the sliding control to reset the resolution.
The display works properly during the POST but goes blank when the operating system starts.	The display settings in the operating system are incompatible with your graphics card and monitor.	1. For Windows, restart your computer in VGA mode. 2. After the operating system starts, change the display settings to match those supported by your graphics card and monitor. 3. Refer to your operating system and graphics card documentation for information about changing display settings.
Power LED flashes red 6 times (once every second), followed by a two-second pause, and then the computer beeps 6 times.	Pre-video graphics error.	For systems with a graphics card: 1. Reseat the graphics card. 2. If the card requires external power, make sure the power cable is properly connected. 3. Replace the graphics card. 4. Replace the system board. For systems with no graphics card installed, the CPU may have no integrated graphics capability.
Monitor does not function when used with Energy Saver features.	Monitor without Energy Saver capabilities is being used with Energy Saver features enabled.	Disable the monitor Energy Saver feature.
Dim characters	The brightness and contrast controls are not set properly.	Adjust the monitor brightness and contrast controls.

Problem	Cause	Solution
	Cables are not properly connected.	Verify that the graphics cable is connected to the graphics card and the monitor.
Blurry video or requested resolution cannot be set.	If the graphics controller was upgraded, the correct video drivers might not be loaded.	Install the video drivers included in the upgrade kit, or download and install the latest drivers for your graphics card from http://welcome.hp.com/country/us/en/support.html.
	Monitor cannot display requested resolution.	Change the requested resolution.
The picture is broken up, rolls, jitters, or flashes.	The monitor connections might be faulty, or the monitor might be incorrectly adjusted.	1. Be sure the monitor cable is securely connected to the computer. 2. In a multiple CRT monitor system, make sure that the monitors' electromagnetic fields are not interfering with each other. Move them apart if necessary. 3. Move fluorescent lights or fans that are too close to the CRT monitor.
	Monitor must be degaussed.	Degauss the monitor.
Vibrating or rattling noise coming from inside a CRT monitor when powered on.	Monitor degaussing coil has been activated.	None. It is normal for the degaussing coil to be activated when the monitor is turned on.
Clicking noise coming from inside a CRT monitor.	Electronic relays have been activated inside the monitor.	None. It is normal for some monitors to make a clicking noise when turned on and off, when going in and out of Standby mode, and when changing resolutions.
High pitched noise coming from inside a flat-panel monitor.	Brightness and contrast settings are too high.	Lower brightness and contrast settings.
Fuzzy focus; streaking, ghosting, or shadowing effects; horizontal scrolling lines; faint vertical bars; or unable to center the picture on the screen (flat-panel monitors using an analog VGA input connection only.)	Flat-panel monitor's internal digital conversion circuits might be unable to correctly interpret the output synchronization of the graphics card.	1. Select the monitor's **Auto-Adjustment** option in the monitor's onscreen display menu. 2. Manually synchronize the Clock and Clock Phase onscreen display functions. 3. Download SoftPaq SP22333 to assist with the synchronization).
Some typed symbols do not appear correctly.	The font you are using does not support that symbol.	Use the Character Map to locate and select the appropriate symbol. For Windows 7, select **Start** > **All Programs** > **Accessories** > **System Tools** > **Character Map**. You can copy the symbol from the Character Map into a document. For Windows 8.1, from the Start screen, type `character map`. The application appears under the Apps heading. (Windows 10) Type `character` in the taskbar search box, and then select **Character Map**.

Solving audio problems

Problem	Cause	Solution
Sound does not come out of the speaker or headphones.	Software volume control is turned down.	Double-click the **Speaker** icon on the taskbar, and then use the volume slider to adjust the volume.
	The external speakers are not turned on.	Turn on the external speakers.
	External speakers plugged into the wrong audio jack.	See your sound card documentation for proper speaker connection.
	Digital CD audio is not enabled.	Enable digital CD audio: 1. From the Control Panel, select **System.** 2. On the Hardware tab, select the **Device Manager** button. 3. Right-click the **CD/DVD** device and select **Properties**. 4. On the Properties tab, select **Enable digital CD audio for this CD-ROM device**.
	Headphones or devices connected to the line-out connector have muted the internal speaker.	Turn on and use headphones or external speakers, if connected, or disconnect headphones or external speakers.
	Volume is muted.	1. From the Control Panel, select **Sound, Speech and Audio Devices**, and then select **Sounds and Audio Devices**. 2. Deselect the **Mute** checkbox.
	Computer is in Standby mode.	Press the power button to resume from Standby mode.
Noise or no sound comes out of the speakers or headphones.		1. If you are using digital speakers that have a stereo jack and you want the system to autoswitch to digital, use a stereo-to-mono adapter to engage the auto sense feature, or use multimedia device properties to switch the audio signal from analog to digital. 2. If the headphones have a mono jack, use the multimedia device properties to switch the system to analog out. **NOTE:** If you set digital as the Output Mode, the internal speaker and external analog speakers no longer output audio until you switch back to an auto sense or analog mode. If you set analog as the Output Mode, external digital speakers do not function until you change the output mode back to an auto-sense or digital mode.
Sound occurs intermittently.	Processor resources are being used by other open applications.	Shut down all open processor-intensive applications.
Workstation appears to be locked up while recording audio.	The hard drive might be full.	1. Before recording, be sure there is enough free space on the hard drive. 2. Try recording the audio file in a compressed format.

Solving printer problems

Problem	Cause	Solution
Printer does not print.	Printer is not turned on and online.	Turn the printer on and be sure it is online.
	The correct printer driver for the application is not installed.	1. Install the correct printer driver for the application. 2. Try printing using the MS-DOS command: **DIR C:\> [printer port]** Replace *printer port* with the address of the printer used. If the printer works, reload the printer driver.
	If you are on a network, you might not have made a connection to the printer.	Make the proper network connection to the printer.
	Printer might have failed.	Run printer self-test.
Printer does not turn on.	The cables might not be connected properly.	

Solving power supply problems

This section presents power supply troubleshooting scenarios.

Testing power supply

Before replacing the power supply unit (PSU), use the Built-In Self-Test (BIST) feature to learn if the power supply still works.

NOTE: Not all PSUs have the BIST functionality. Refer to the *Rear panel components* section of this document to determine BIST availability for your workstation.

To test the power supply:

1. Unplug the AC power.
2. Unplug all power cables to the system boards.
3. Plug in AC power and verify the following:
   - If the green BIST LED on the rear of the workstation is illuminated **and** the fan is spinning, the PSU is functional.
   - If the green BIST LED is not illuminated **or** the fan is not spinning, replace the PSU.

See the *Rear panel components* section of this document to locate the BIST LED on your workstation.

Problem	Cause	Solution
PSU shuts down intermittently.	Power supply fault.	Replace the PSU.
Workstation powers off and the Power LED flashes red 2 times (once every second), followed by a two-second pause.	Processor thermal protection is activated. A fan might be blocked or not turning.	1. Make sure that the workstation air vents are not blocked. 2. Open the access panel and press the workstation power button.

Problem	Cause	Solution
	OR The processor heatsink fan assembly is not properly attached to the processor.	3. Verify that the system fan is running. 4. Verify that the processor heatsink fan spins. If the heatsink fan is not spinning, verify that the fan cable is plugged into the system board connector. Verify that the fan is properly seated. 5. Replace the processor heatsink.
Power LED flashes red (once every 2 seconds).	Power failure (power supply is overloaded).	1. Determine whether a device is causing the problem by performing the following: a. Disconnect AC power. b. Remove all attached devices. c. Turn on the workstation. If the system enters the POST, perform the following: a. Power off the workstation. b. Replace one device at a time and repeat this procedure until a failure occurs. c. Replace the device causing the failure. d. Continue adding devices one at a time to verify that all devices are functioning. 2. Verify power supply functionality (Tower only). a. Disconnect AC power. b. Unplug all system board power cables. c. Plug in AC power. • If the PSU fan spins and the LED is illuminated (see Testing power supply on page 72), the power supply is good. Replace the system board. • If the PSU fan does not spin or the LED does not illuminate (see Testing power supply on page 72), replace the power supply.

Using HP PC Hardware Diagnostics (UEFI)

HP PC Hardware Diagnostics is a Unified Extensible Firmware Interface (UEFI) that allows you to run diagnostic tests to determine whether the computer hardware is functioning properly. The tool runs outside the operating system so that it can isolate hardware failures from issues that are caused by the operating system or other software components.

When HP PC Hardware Diagnostics (UEFI) detects a failure that requires hardware replacement, a 24-digit Failure ID is generated. This ID can then be provided to support to help determine how to correct the problem.

To start HP PC Hardware Diagnostics (UEFI), follow these steps:

1. Turn on or restart the computer, and quickly press esc
2. Press F2.

   The BIOS searches three places for the diagnostic tools, in the following order:

a. Connected USB drive

NOTE: To download the HP PC Hardware Diagnostics (UEFI) tool to a USB drive, see Downloading HP PC Hardware Diagnostics (UEFI) to a USB device on page 74.

b. Hard drive

c. BIOS

3. When the diagnostic tool opens, select the type of diagnostic test you want to run, and then follow the on-screen instructions.

NOTE: If you need to stop a diagnostic test, press esc.

Downloading HP PC Hardware Diagnostics (UEFI) to a USB device

NOTE: The HP PC Hardware Diagnostics (UEFI) download instructions are provided in English only, and you must use a Windows computer to download and create the HP UEFI support environment because only .exe files are offered.

There are two options to download HP PC Hardward Diagnostics to USB device.

Download the latest UEFI version

1. Go to http://www.hp.com/go/techcenter/pcdiags. The HP PC Diagnostics home page is displayed.
2. In the HP PC Hardware Diagnostics section, click the **Dowload** link, and then select **Run**.

Download any version of UEFI for a specific product

1. Go to http://www.hp.com/support, and then select your country. The HP Support page is displayed. .
2. Click **Drivers & Downloads**.
3. Use the categories listed to find your product.

   – or –

   Click **Find Now** to let HP automatically detect your product.
4. Select your computer, and then select your operating system.
5. In the **Diagnostic** section, follow the on-screen instructions to select and download the UEFI version you want.

POST error messages and diagnostic front panel LEDs and audible codes

This appendix lists the error codes, error messages, and the various indicator light and audible sequences that you may encounter during Power-On Self-Test (POST) or computer restart, the probable source of the problem, and steps you can take to resolve the error condition.

POST Message Disabled suppresses most system messages during POST, such as memory count and non-error text messages. If a POST error occurs, the screen will display the error message. To manually switch to the POST Messages Enabled mode during POST, press any key (except F10, F11, or F12). The default mode is POST Message Disabled.

The speed at which the computer loads the operating system and the extent to which it is tested are determined by the POST mode selection.

Quick Boot is a fast startup process that does not run all of the system level tests, such as the memory test. Full Boot runs all of the ROM-based system tests and takes longer to complete.

Full Boot may also be enabled to run every 1 to 30 days on a regularly scheduled basis. To establish the schedule, reconfigure the computer to the Full Boot Every x Days mode, using Computer Setup.

NOTE: For more information on Computer Setup, see Computer Setup (F10) Utilities on page 18.

POST numeric codes and text messages

This section covers those POST errors that have numeric codes associated with them. The section also includes some text messages that may be encountered during POST.

NOTE: The computer will beep once after a POST text message is displayed on the screen.

Control panel message	Description	Recommended action
002-Option ROM Checksum Error	System ROM or expansion board option ROM checksum.	1. Verify the correct ROM. 2. Flash the ROM if needed. 3. If an expansion board was recently added, remove it to see if the problem remains. 4. Clear CMOS. (See Clearing and resetting the BIOS on page 83.) 5. If the message disappears, there may be a problem with the expansion card. 6. Replace the system board.
003-System Board Failure	DMA or timers.	1. Clear CMOS. (See Clearing and resetting the BIOS on page 83.) 2. Remove expansion boards. 3. Replace the system board.
005-Real-Time Clock Power Loss	Invalid time or date in configuration memory. RTC (real-time clock) battery may need to be replaced.	Reset the date and time under **Control Panel** (Computer Setup can also be used). If the problem persists, replace the RTC battery. See the Removal and Replacement section for instructions on installing a new battery.
008–Microcode Patch Error	Processor is not supported by the BIOS.	1. Upgrade BIOS to proper version. 2. Change the processor.
009–PMM Allocation Error during MEBx Download	Memory error during POST execution of the Management Engine (ME) BIOS Extensions option ROM.	1. Reboot the computer. 2. Unplug the power cord, re-seat the memory modules, and reboot the computer. 3. If the memory configuration was recently changed, unplug the computer, restore the original memory configuration, and reboot the computer. 4. If the error persists, replace the system board.
00A-Product Information Not Valid	The product information programmed into the system board is missing or invalid.	Use Computer Setup to update this information.

Control panel message	Description	Recommended action
00B-MEBx Module did not checksum correctly	Memory error during POST execution of the Management Engine (ME) BIOS Extensions option ROM.	1. Reboot the computer. 2. Unplug the power cord, re-seat the memory modules, and reboot the computer. 3. If the memory configuration was recently changed, unplug the power cord, restore the original memory configuration, and reboot the computer. 4. If the error persists, replace the system board.
00C-PMM Deallocation Error during MEBx Cleanup	Memory error during POST execution of the Management Engine (ME) BIOS Extensions option ROM.	1. Reboot the computer. 2. Unplug the power cord, re-seat the memory modules, and reboot the computer. 3. If the memory configuration was recently changed, unplug the power cord, restore the original memory configuration, and reboot the computer. 4. If the error persists, replace the system board.
00D-Setup Error during MEBx Execution	MEBx selection or exit resulted in a setup failure.	1. Reboot the computer. 2. Unplug the power cord, re-seat the memory modules, and reboot the computer. 3. If the memory configuration was recently changed, unplug the power cord, restore the original memory configuration, and reboot the computer. 4. If the error persists, replace the system board.
00E-Inventory Error during MEBx Execution	BIOS information passed to the MEBx resulted in a failure.	1. Reboot the computer. 2. If the error persists, update to the latest BIOS version. 3. If the error still persists, replace the system board.
00F-Interface Error during MEBx Execution	MEBx operation experienced a hardware error during communication with the ME.	1. Reboot the computer. 2. If the error persists, update to the latest BIOS version. 3. If the error still persists, replace the system board.
100-Front Audio Not Connected	Front audio cable has been detached or unseated from system board.	Reconnect or replace front audio cable.
2E1-MemorySize Error	Memory amount has changed since the last boot (memory added or removed).	The system memory size is different from the last startup. The most common reason is the removal of memory from the system board. Press the F1 key to save the memory changes. If this message persists, verify that the memory modules are installed correctly.

Control panel message	Description	Recommended action
2E2-Memory Error	Memory module configuration failed during boot up.	1. Ensure memory modules are correctly installed. 2. Verify proper memory module type. 3. Remove and replace the identified faulty memory module(s). 4. If the error persists after replacing memory modules, replace the system board.
2E3-Incompatible Memory Module in Memory Socket(s) X, X, ...	A memory module in memory socket identified in the error message is missing critical SPD information, or is incompatible with the chipset.	1. Verify proper memory module type. 2. Try another memory socket. 3. Replace with a supported module.
2E4-DIMM Configuration Warning	The current memory configuration is not optimized.	Rearrange the DIMMs so that each channel has the same amount of memory.
2E5-ECC Memory Module Detected on Unsupported Platform	Recently added memory module(s) support ECC memory error correction.	1. If additional memory was recently added, remove it to see if the problem remains. 2. Check product documentation for memory support information.
2E6–Memory Not Configured Correctly for Proper MEBx Execution	DIMM1 is not installed.	Make sure there is a memory module in the DIMM1 socket and that it is properly seated.
300–Configuration Change Warning	The storage device configuration will be updated as shown.	Not applicable
301-Hard Disk 1: SMART Hard Drive Detects Imminent Failure	Hard drive is about to fail. (Some hard drives have a hard drive firmware patch that will fix an erroneous error message.)	1. Determine if hard drive is giving correct error message. Run the Drive Protection System test under using F2 Diagnostics when booting the computer. 2. Apply hard drive firmware patch if applicable. (Available at http://www.hp.com/support.) 3. Back up contents and replace hard drive.
302-Hard Disk 2: SMART Hard Drive Detects Imminent Failure	Hard drive is about to fail. (Some hard drives have a hard drive firmware patch that will fix an erroneous error message.)	1. Determine if hard drive is giving correct error message. Run the Drive Protection System test under using F2 Diagnostics when booting the computer. 2. Apply hard drive firmware patch if applicable. (Available at http://www.hp.com/support.) 3. Back up contents and replace hard drive.
309 – 30C: Hard Disk 3–6: SMART Hard Drive Detects Imminent Failure	Hard drive is about to fail. (Some hard drives have a hard drive firmware patch that will fix an erroneous error message.)	1. Determine if hard drive is giving correct error message. Run the Drive Protection System test under using F2 Diagnostics when booting the computer. 2. Apply hard drive firmware patch if applicable. (Available at http://www.hp.com/support.) 3. Back up contents and replace hard drive.
3F0–Boot Device Not Found	Boot device not found.	Insert boot device or load operating system.

Control panel message	Description	Recommended action
3F1–Hard Disk 1 Error	Hard disk 1 error.	1. Check and/or replace cables. 2. Clear CMOS. (See Clearing and resetting the BIOS on page 83.) 3. Replace the hard disk drive.
3F2–Hard Disk 2 Error	Hard disk 2 error.	1. Check and/or replace cables. 2. Clear CMOS. (See Clearing and resetting the BIOS on page 83.) 3. Replace the hard disk drive.
400-Serial Port A Address Conflict Detected	Both external and internal serial ports are assigned to the same resources.	1. Remove any serial port expansion cards. 2. Clear CMOS. (See Clearing and resetting the BIOS on page 83.) 3. Reconfigure card resources and/or run Computer Setup or Windows utilities.
401-Serial Port B Address Conflict Detected	Both external and internal serial ports are assigned to the same resources.	1. Remove any serial port expansion cards. 2. Clear CMOS. (See Clearing and resetting the BIOS on page 83.) 3. Reconfigure card resources and/or run Computer Setup or Windows utilities.
402-Serial Port C Address Conflict Detected	Both external and internal serial ports are assigned to the same resources.	1. Remove any serial port expansion cards. 2. Clear CMOS. (See Clearing and resetting the BIOS on page 83.) 3. Reconfigure card resources and/or run Computer Setup or Windows utilities.
403-Serial Port D Address Conflict Detected	Both external and internal serial ports are assigned to the same resources.	1. Remove any serial port expansion cards. 2. Clear CMOS. (See Clearing and resetting the BIOS on page 83.) 3. Reconfigure card resources and/or run Computer Setup or Windows utilities.
419-Out of Memory Space for Option ROMs	Recently added PCI expansion card contains an option ROM too large to download during POST.	▲ If a PCI expansion card was recently added, remove it to see if the problem remains.
41A-Front USB1/USB2 Not Connected	Front USB cable has been detached or unseated from system board.	Reconnect or replace front USB cable.
41B-Device in PCI Express Slot Failed To Initialize	There is an incompatibility or problem with a PCIe device and the system or PCIe link could not be configured to a valid bus width or speed.	Try rebooting the system. If the error reoccurs, the device may not work with this system
43A-USB Type-C I2C Not Connected	Cable is required between I2C on card and USB-C on the system board.	Install cable between I2C on card and USB-C on the system board.
43B-More Than One USB type-C Cards Are Installed	More than one USB type-C card is installed.	Remove USB type-C card so only one is installed.
500–BIOS Recovery	A system BIOS recovery has occurred.	Not applicable.
70x-Wireless Mode Not Supported	The system has detected a wireless module installed in the system that is not supported and has been disabled.	Replace with a supported module.

Control panel message	Description	Recommended action
800-Keyboard Error	Keyboard failure.	1. Reconnect keyboard with computer turned off. 2. Check connector for bent or missing pins. 3. Ensure that none of the keys are depressed. 4. Replace keyboard.
801-Keyboard or System Unit Error	Keyboard failure.	1. Reconnect the keyboard with computer turned off. 2. Ensure that none of the keys are depressed. 3. Replace the keyboard. 4. Replace the system board.
900-CPU Fan Not Detected	CPU fan is not connected or may have malfunctioned.	1. Reseat CPU fan. 2. Reseat fan cable. 3. Replace CPU fan.
901-Chassis, Rear Chassis, or Front Chassis Fan not Detected	Chassis, rear chassis, or front chassis fan is not connected or may have malfunctioned.	1. Reseat chassis, rear chassis, or front chassis fan. 2. Reseat fan cable. 3. Replace chassis, rear chassis, or front chassis fan.
903-Computer Cover Has Been Removed Since Last System Startup		N/A
904-SATA Cabling Error	One or more SATA devices are improperly attached. For optimal performance, the SATA 0 and SATA 1 ports should be used for hard drives before other ports.	Ensure SATA connectors are used in ascending order. For one device, use SATA 0. For two devices, use SATA 0 and SATA 1. For three devices, use SATA 0, SATA 1, and SATA 2.
90B-Fan Failure	The system has detected that a cooling fan is not operating correctly.	1. Reseat fan. 2. Reseat fan cable. 3. Replace fan.
90D-System Temperature	Thermal shutdown occurred. The system BIOS has detected your machine was previously shut down to avoid overheating. Overheating may occur if the cooling vents are blocked or the operating temperature exceeds the system specifications. The machine should return to normal operation once the situation is resolved.	Make sure system has proper airflow.
90E-Power Supply Fan Not detected	Power supply fan is not connected or may have malfunctioned.	1. Reseat power supply fan. 2. Reseat fan cable. 3. Replace power supply fan.
910–Filter Warning	Airflow filter is dirty.	Replace the airflow filter.

Interpreting system validation diagnostic front panel LEDs and audible codes

During the system validation phase that occurs at system startup, the BIOS validates the functionality of the following subsystems and conditions:

- AC adapter
- System board power
- Processor failure
- BIOS corruption
- Memory failure
- Graphics failure
- System board failure
- BIOS authentication failure

If an error is detected, specific patterns of long and short blinks, accompanied by long and short beeps (where applicable) are used to identify the error. These patterns will make up a two part code:

- Major – the category of the error
- Minor – the specific error within the category

NOTE: Single beep/blink codes are not used.

Number of long beeps/blinks	Error category
1	Not used
2	BIOS
3	Hardware
4	Thermal
5	System board

Patterns of blink/beep codes are determined by using the following parameters:

- 1 second pause occurs after the last major blink.
- 2 second pause occurs after the last minor blink.
- Beep error code sequences occur for the first 5 iterations of the pattern and then stop.
- Blink error code sequences continue until the computer is unplugged or the power button is pressed.

NOTE: Not all diagnostic lights and audible codes are available on all models.

The red LED blinks to represent the major error category (long blinks). The white LED blinks to represent the minor error category (short blinks). For example, ‘3.5’ indicates 3 long red blinks and 5 short white blinks to communicate the processor is not detected.

Category	Major/minor code	Description
BIOS	2.2	The main area (DXE) of BIOS has become corrupted and there is no recovery binary image available.
	2.3	The embedded controller policy requires the user to enter a key sequence.
	2.4	The embedded controller is checking or recovering the boot block.
Hardware	3.2	The embedded controller has timed out waiting for BIOS to return from memory initialization.
	3.3	The embedded controller has timed out waiting for BIOS to return from graphics initialization.
	3.4	The system board displays a power failure (crowbar).*
	3.5	The processor is not detected.*
	3.6	The processor does not support an enabled feature.
Thermal	4.2	A processor over temperature condition has been detected.*
	4.3	An ambient temperature over temperature condition has been detected.
	4.4	An MXM over temperature condition has been detected.
System board	5.2	The embedded controller cannot find valid firmware.
	5.3	The embedded controller has timed out waiting for the BIOS.
	5.4	The embedded controller has timed out waiting for BIOS to return from system board initialization.
	5.5	The embedded controller rebooted the system after a possible lockup condition had been detected through the use of a System Health Timer, Automated System Recovery Timer, or other mechanism.
* Indicates hardware triggered event; all other events are controlled by the BIOS.		

5 Configuring password security and resetting CMOS

This chapter describes how to configure password security and to reset CMOS.

Preparing to configure passwords

Computer Setup (F10) Utility enables you to create setup and power-on passwords.

There are three possibilities for setting passwords:

- Define an administrator password only. You will need the password to enter Computer Setup (F10) Utility, but you will not need a password to start the workstation.
- Define a power-on password only. This password lets you start the workstation or enter the setup utility.
- Define both. In this case, the administrator password lets you start the workstation and enter the setup utility. The power-on password starts the workstation but does not let you enter the setup utility,

After you create both passwords, you can use the administrator password in place of the power-on password as an override to log into the computer (a useful feature for a network administrator).

NOTE: You can only clear the passwords with the password jumper. Clearing CMOS does not clear the passwords.

CAUTION: Before pressing the Clear CMOS button, back up your computer CMOS settings.

Pressing the Clear CMOS button resets CMOS values to factory defaults and erases customized information, including asset numbers and special settings.

To back up the CMOS settings, run Computer Setup (F10) Utility and select **Save to Diskette** from the File menu.

Resetting the password jumper

CAUTION: Stringent security is a mode where there is no physical bypass of the password function. If enabled, removing the password jumper will be ignored. To enable this mode, change the security setting **Clear Password Jumper** in Password Policies to **Ignore**.

If you lose or forget the password when in stringent security mode, the system can only be reset by System Management Command. This is a way for HP Service and Support to provide a secure method to access the BIOS and command a password reset for a specifically identified unit under the direction of the owner. This scenario may not be covered under warranty.

To prevent needing a customer service event to restore access to the system, record your configured administrator and power-on passwords in a safe place away from your computer.

To disable the power-on or administrator password features, or to clear the power-on or administrator passwords, complete the following steps:

1. Shut down the operating system properly, then turn off the computer and any external devices, and disconnect the power cord from the power outlet.
2. With the power cord disconnected, press the power button again to drain the system of any residual power.

WARNING! To reduce the risk of personal injury from electrical shock and/or hot surfaces, be sure to disconnect the power cord from the wall outlet, and allow the internal system components to cool before touching.

CAUTION: When the computer is plugged in, the power supply always has voltage applied to the system board even when the unit is turned off. Failure to disconnect the power cord can result in damage to the system.

Static electricity can damage the electronic components of the computer or optional equipment. Before beginning these procedures, ensure that you are discharged of static electricity by briefly touching a grounded metal object. See the *Safety & Regulatory Information* guide for more information.

3. Remove the access panel.
4. Locate the header and jumper.

NOTE: The password jumper is green so that it can be easily identified.

5. Remove the jumper from pins 1 and 2.
6. Place the jumper on either pin 1 or 2, but not both, so that it does not get lost.
7. Replace the access panel and reconnect the external equipment.
8. Plug in the computer and turn on power. Allow the operating system to start. This clears the current passwords and disables the password features.
9. Shut down the computer, unplug the power, and disconnect the external equipment.
10. Remove the access panel.
11. Place the jumper on pins 1 and 2.
12. Replace the access panel.
13. Reconnect the external equipment and plug in the computer.

Clearing and resetting the BIOS

The CMOS button resets BIOS settings to default, but does not clear the passwords or affect any of the other Security settings. On Intel systems with advanced manageability features, the CMOS button will also partially unprovision AMT.

1. Turn off the computer and any external devices, and disconnect the power cord from the power outlet.
2. Disconnect the keyboard, monitor, and any other external equipment connected to the computer.

WARNING! To reduce the risk of personal injury from electrical shock and/or hot surfaces, be sure to disconnect the power cord from the wall outlet, and allow the internal system components to cool before touching.

CAUTION: When the computer is plugged in, the power supply always has voltage applied to the system board even when the unit is turned off. Failure to disconnect the power cord can result in damage to the system.

Static electricity can damage the electronic components of the computer or optional equipment. Before beginning these procedures, ensure that you are discharged of static electricity by briefly touching a grounded metal object. See the *Safety & Regulatory Information* guide for more information.

3. Remove the access panel.

CAUTION: Pushing the CMOS button will reset CMOS values to factory defaults. It is important to back up the computer CMOS settings before resetting them in case they are needed later. Back up is easily done through Computer Setup. See Computer Setup (F10) Utilities on page 18 for information on backing up the CMOS settings.

4. Locate, press, and hold the CMOS button in for five seconds.

NOTE: Make sure you have disconnected the AC power cord from the wall outlet. The CMOS button will not clear CMOS if the power cord is connected.

5. Replace the access panel.
6. Reconnect the external devices.
7. Plug in the computer and turn on power.

NOTE: You will receive POST error messages after clearing CMOS and rebooting advising you that configuration changes have occurred. Use Computer Setup to reset any special system setups along with the date and time.

For instructions on Computer Setup, see Computer Setup (F10) Utilities on page 18.

A Linux technical notes

HP offers a variety of Linux solutions for HP workstation customers:

- HP offers an Ubuntu preload on some Z Series Workstations.
- HP certifies and supports Ubuntu on some HP workstations.
- HP certifies and supports Red Hat Enterprise Linux (RHEL) on HP workstations.
- HP certifies SUSE Linux Enterprise Desktop (SLED) on HP workstations.
- HP offers a SLED 11 preload on some older Z Series Workstations.

For Linux setup and restore procedures, see the user guide for your workstation at http://www.hp.com/support/workstation_manuals.

- System RAM
- Audio
- Network cards
- Hyper-Threading Technology
- NVIDIA Graphics Workstations
- AMD Graphics Workstations

NOTE: After you set up the operating system, make sure that the latest BIOS, drivers, and software updates are installed.

CAUTION: Do not add optional hardware or third-party devices to the workstation until the operating system is successfully installed. Adding hardware might cause errors and prevent the operating system from installing correctly.

System RAM

HP supports different amounts of total RAM in various HP workstations, based on the number of hardware DIMM slots and the capabilities of the system. The total memory supported for each configuration is listed in the *Hardware Support Matrix for HP Linux Workstations* at http://www.hp.com/support/linux_hardware_matrix.

Audio

All HP workstations come with built-in audio hardware. The audio hardware is supported by the *Advanced Linux Sound Architecture* (ALSA) drivers included with all modern Linux distributions.

The audio hardware provides basic playback and recording features. The ability to simultaneously play audio from multiple sources, such as applications and CDs, is provided in the ALSA driver that provides audio mixing. The performance of software audio mixing and playback is greatly improved in ALSA version 1.0.13 and later.

After the driver is installed, the optional NVIDIA and AMD graphics cards that are supported in HP workstations also provide audio functionality over HDMI. The signal can be passed through the DisplayPort connector to a monitor with audio capabilities. The vendor driver must be installed. Such a configuration might present two audio hardware choices. If you do not hear sound through the speakers, one possible

reason is that the graphics card (default) is selected for audio output instead of the DisplayPort. Check the audio settings (for example, **Sound** in gnome-control-center).

In some systems, embedded Intel HD graphics may also present a similar HDMI audio device that can be used through the DisplayPort interface. No proprietary driver is needed for this device, just a sufficiently recent kernel.

Network cards

All HP workstations include one or two integrated network interface controllers. Some support optional NICs. Most Linux distributions have drivers for these interfaces.

Hyper-Threading Technology

The Z Series Workstations support Hyper-Threading Technology (HTT), an Intel technology that improves processor performance by enabling the processor to simultaneously perform multiple tasks. The operating system treats an HTT-enabled processor as two virtual processors and shares the workload between them when possible. This feature can be used only if the operating system support multiple processors and is specifically optimized for HTT.

To enable HTT:

1. During startup, press F10 to enter Computer Setup (F10) Utility.
2. Select **Advanced > Performance Options**.
3. Set **Intel Hyper-Threading Technology** to **Enable**, and then press F10 to exit the menu.
4. Select **Main > Save Changes and Exit**.
5. Restart the system to enable HTT.

NOTE: On most recent Linux distributions (including RHEL 6, SLED 11, and updates to those streams), the kernel automatically detects that HTT is enabled and works correctly.

NVIDIA Graphics Workstations

Some workstation configurations come with NVIDIA Quadro graphics hardware. HP recommends the use of NVIDIA drivers for best results on Linux systems.

HP provides recommended versions of the drivers with RPM-compatible installers for RHEL and SLED distributions. These are available from the HP Installer Kit for Linux and from workstation driver repositories on hp.com. When HP installers are used, their contents and documentation links are located in the /opt/hp/nvidia folder.

When installing Linux on a workstation that contains an NVIDIA card, administrators should select a VESA-compatible driver to avoid the instability that is experienced with some open-source versions of the Nouveau and DRM drivers.

Open-source versions of Nouveau drivers and NVIDIA drivers cannot coexist in the same runtime environment because they use the same hardware resources. If administrators create their own Linux environments using NVIDIA drivers but choose not to use HP-packaged versions, HP recommends that they manually append the following boot loader parameters to properly suppress the Nouveau driver at runtime (grub example below):

```
kernel /vmlinuz ... rdblacklist=nouveau nouveau.modeset=0
```

This action is applied by HP installers but must be applied/restored under other circumstances.

To customize display characteristics and resolutions when the computer is using an NVIDIA driver, execute the following command:

```
/usr/bin/nvidia-settings
```

To create and manipulate the /etc/X11/xorg.conf file, execute:

```
/usr/bin/nvidia-xconfig
```

AMD Graphics Workstations

Some workstation configurations include AMD graphics hardware. HP recommends use of AMD graphics drivers for best results on Linux systems.

HP also provides recommended versions of AMD graphics drivers with RPM-compatible installers for RHEL and SLED distributions. These are available from the HP Installer Kit for Linux and workstation driver support packages on hp.com.

The open source RADEON and RADEONHD drivers can conflict with the AMD graphics drivers by claiming the hardware early in the boot process. The AMD driver installation process usually blacklists conflicting drivers and turns off kernel mode-setting in the initial RAM image.

Administrator customization of the display characteristics and many other aspects of an AMD graphics driver environment is available through the following command, which starts the Catalyst Control Center:

```
/usr/bin/amdcccle
```

Some settings for AMD graphics, including reconfiguration of the /etc/X11/xorg.conf file, can be accomplished through the many options provided by the following command:

```
/usr/bin/aticonfig
```

Information can be found in these directories after the driver is installed:

```
/opt/hp/ati
```

```
/usr/share/ati
```

```
/usr/share/doc/fglrx
```

If the automatic init script attempts to rebuild the kernel module, the name of the log file is /var/log/fglrx-build.log.

B Configuring RAID devices

This appendix explains how to configure RAID arrays on your workstation.

Topics
RAID hard drive maximum and associated storage controller options on page 88
Supported RAID configurations on page 89
Configuring Intel SATA RAID on page 89
Software RAID solution on page 90

For additional information about RAID configuration, go to http://www.hp.com/support/RAID_FAQs.

RAID hard drive maximum and associated storage controller options

This section lists the maximum number of hard drives supported on HP workstations according to RAID configuration and storage controller options.

NOTE: This section applies to internal workstation configurations that do not use add-in cards and external enclosures.

	Maximum hard drives allowed		
	Hard drives		Storage controllers
	SATA		Onboard
	8.5 mm (3.5 in)	6.3 mm (2.5 in)	RST
SFF	2	2	Yes
Tower	2	2	Yes

Supported RAID configurations

The following RAID configurations are supported:

RAID configuration details		
Configuration	**Description**	**Controllers**
RAID 0 Integrated striped disk array	• Requires a minimum of two drives. • Provides improved I/O performance. • Provides no fault tolerance. • Loses all data if any disk in the array fails. • Increases disk performance.	Intel with RST
RAID 1 Mirrored disk array	• Supports two drives. • Provides 100% redundancy: all data from one drive is duplicated on a second drive. • Recovers from a single-drive failure. • Serves as a good entry-level redundant system.	Intel with RST

Configuring Intel SATA RAID

This section describes how to use Intel® Rapid Storage Technology (RST) to set up and manage SATA RAID volumes.

NOTE: These instructions apply to Windows-based systems. They also apply to Linux distributions that include the isci kernel driver support for the RSTe technology. This driver is included on recent releases of most upstream and enterprise distributions, and may be available for addition to some previous releases. If this driver is not available in the distribution, or is not applicable to the platform (e.g., the RST controller), the Software RAID solution is recommended.

You can create a SATA RAID array that contains up to the maximum number of internal SATA hard drives and eSATA drives (if you use an optional eSATA bulkhead cable) supported on your workstation.

The Intel SATA option ROM configuration utilities run when you select **RAID** for the SATA emulation mode.

Two or more hard drives must be attached to the controller for the option ROM to run.

Configuring system BIOS

To set up a RAID configuration, the emulation mode must be set to RAID in Computer Setup (F10) Utility. This is the default setting. If the mode has been changed, follow these steps to reinstate it.

1. During startup, press esc to select a language from the list, and then select Computer Setup (F10) Utility.
2. Under Computer Setup (F10) Utility, use the arrow keys to navigate and select options.
3. Select **Advanced** > **System Options**, then press enter.
4. Select **Configure Storage Controller for RAID** > **Enable**.
5. Select **Menu** > **Save Changes and Exit**, then press enter.
6. Press enter to accept the changes.

Configuring RAID with the Intel utility

Follow these steps to create RAID volumes.

1. Press ctrl+I when prompted, to enter the Intel Rapid Storage Technology utility (RST). Use the arrow keys and the space bar to navigate and select options.

   NOTE: If only one hard drive is attached, the utility does not open.

2. Select **Create RAID Volume**, and then press enter.
3. Type the a name for the RAID volume in the Name field, and then press tab.
4. Select a level in the RAID Level field, and then press tab.
5. If three or more hard drives are installed, complete the following steps:
   a. Press enter to display the Select dialog box.
   b. Select individual physical members of the volume.
   c. Press enter to exit the Select dialog box and to return to the Create Volume Menu dialog box.
6. If appropriate, select a size in the Stripe Size field, and then press tab.
7. Enter the desired volume size in the Capacity field, and then press tab.
8. Press enter to initiate volume creation.
9. When the warning message appears, press Y to create the volume.
10. Select **6** > **Exit**, then press enter.
11. Press Y to confirm the exit.

Software RAID solution

This section summarizes software RAID considerations that are specific to the Linux environment, and provides links to additional configuration resources.

Software RAID considerations

The Linux kernel software RAID driver (called *md*, for *multiple device*) offers integrated software RAID without the need for additional hardware disk controllers or kernel patches. Unlike most hardware RAID solutions, software RAID can be used with all types of disk technologies, including SATA, SCSI, and solid-state drives. This software solution requires only minimal setup of the disks themselves.

However, when compared to hardware-based RAID, software RAID has disadvantages in managing the disks, breaking up data as necessary, and managing parity data. The CPU must assume some extra loading: disk-intensive workloads result in roughly double the CPU overhead (for example, from 15% to 30%). For most applications, this overhead is easily handled by excess headroom in the processors. But for some applications where disk and CPU performance are very well balanced and already near bottleneck levels, this additional CPU overhead can become troublesome.

Hardware RAID offers advantages because of its large hardware cache and the capability for better scheduling of operations in parallel. However, software RAID offers more flexibility for disk and disk controller setup. Additionally, hardware RAID requires that a failed RAID controller must be replaced with an identical model to avoid data loss, whereas software RAID imposes no such requirements.

Some software RAID schemes offer data protection through mirroring (copying the data to multiple disks in case one disk fails) or parity data (checksums that allow error detection and limited rebuilding of data in case

of a failure). For all software RAID solutions on HP workstations, redundancy can be restored only after the system is shut down so that the failed drive can be replaced. This replacement requires only a minimum amount of work.

Performance considerations

Disk I/O bandwidth is typically limited by the system bus speeds, the disk controller, and the disks themselves. The balance of these hardware limitations, as affected by the software configuration, determines the location of the any bottleneck is in the system.

Several RAID levels offer improved performance relative to stand-alone disk performance. If disk throughput is restricted because of a single disk controller, RAID can probably do little to improve performance until another controller is added. Conversely, if raw disk performance is the bottleneck, a tuned software RAID solution can dramatically improve the throughput. The slower disk performance is, relative to the rest of the system, the better RAID performance will scale, because the slowest piece of the performance pipeline is being directly addressed by moving to RAID.

Configuring software RAID

See the following sites for additional information about configuring software RAID:

- Red Hat Enterprise Linux 7—See the *Storage Administration Guide* at https://access.redhat.com/documentation/en-US/Red_Hat_Enterprise_Linux/7/html/Storage_Administration_Guide/index.html
- Red Hat Enterprise Linux 6—See the *Storage Administration Guide* at http://docs.redhat.com/docs/en-US/Red_Hat_Enterprise_Linux/6/html/Storage_Administration_Guide/index.html
- Red Hat Enterprise Linux 5—See the *Deployment Guide* at http://docs.redhat.com/docs/en-US/Red_Hat_Enterprise_Linux/5/html/Deployment_Guide/ch-raid.html.
- SLED 12—See the *Deployment Guide* at https://www.suse.com/documentation/sled-12/book_sle_deployment/data/sec_yast2_system_raid.html.
- SLED 11—See the *Deployment Guide* at http://www.suse.com/documentation/sled11/book_sle_deployment/?page=/documentation/sled11/book_sle_deployment/data/book_sle_deployment.html.
- Ubuntu 14.04 LTS—See the *Server Guide* at https://help.ubuntu.com/lts/serverguide/advanced-installation.html or the Community Wiki at https://help.ubuntu.com/community/Installation/SoftwareRAID.

For more information about Open Source and Linux at HP, go to http://h10018.www1.hp.com/wwsolutions/linux/index.html.

C System board designators

SFF workstation system board designators

Designator	Silk screen	Component/Description
E15	E15 BBR	Crisis recovery header/jumper
E49	E49 PSWD	Clear password header/jumper
J9	RJ45/USB	LAN/DUAL USB 3.0
J10	J10 USB2/USB3	Quad USB 3.0
J31	J31 X1PCIEXP1	PCIe3 x1 slot (black)
J32	J32 X1PCIEXP2	PCIe3 x1 slot (black)
J41	J41 X16PCIEXP	PCIe3 x16 slot (black)
J42	J42 X4PCIEXP	PCIe3 x16(4) slot (black)
J63	J63 DISPLAY PORT	Dual-Mode DisplayPort connector
J64	J64 DISPLAY PORT	DisplayPort connector
J68	PS2	Mouse connector stacked over keyboard connector
J78	IN/OUT	Audio line in stacked over audio line out
J86	M.2 SSD	M.2 connector
JZ87/88	JZ87/88	Slot1/4 PCIe x16 retention clip
SW50	SW50 CMOS	Clear CMOS switch/push button
P1	PWR	Power supply, 6-pin (white)
P2	PWRCMD	Power command, 6-pin (white)
P3	PWRCPU	Power supply, 4-pin (white)
P5	P5 PB/LED	Front power button/LED (black)
P6	SPKR	Internal speaker (white)
P8	CPU FAN	CPU fan header
P23	FRONT AUD	Front audio (blue)
P24	FRONT USB	Front I/O USB (yellow)
P52	COMB	Serial port
P124	HLCK	Hood lock solenoid (black)
P125	HSENSE	Hood sensor
P150	Media	int-Media (6-pin)
P152	SD RDR	USB 3.0 Media card reader

Designator	Silk screen	Component/Description
P26	FRONT USB3.0	Front I/O USB 3.0 (blue)
P160	SATAPWR0	HDD power (black)
XBT1	XBT1 BAT	Battery holder
XMM1 - XMM4	XMM1 - XMM4 DIMM1 - DIMM4	Memory slots
XU1	XU1	CPU socket

Tower workstation system board designators

Designator	Silk screen	Component
E15	E15	Crisis recovery header/jumper
E49	E49	Clear password header/jumper
J9	J9 RJ/USB	LAN/DUAL USB 2.0
J10	J10 QUAD USB	Quad USB 3.0
J31	SLOT3 PCIe3 x4	PCIe3 x4 connector
J33	SLOT1 PCIe3 x1	PCIe3 x1 connector
J41	SLOT2 PCIe3 x16	PCIe3 x16 connector
J42	SLOT4 PCIe3 x16 (4)	PCIe3 x16 (4) connector
J63	DP	Dual-Mode DisplayPort connector
J65	DVI	DVI-D connector
J68	J68 PS2	Stacked keyboard/mouse connector
J78	J78	Triple stacked audio jacks
J86	M.2 SSD	M.2 connector
J87/88	J87/88	Slot2/4 PCIe x16 retention clip
MTG1-MTG10	N/A	Mounting holes
P1	P1	Power supply connector (6-pin)
P2	PWRCMD	Power command, white (6-pin)
P3	P3 CPU PWR	CPU power connector (4-pin)
P5	P5	Power button/HDD LED/Power LED switch/Side access panel sensor/Temperature header
P6	SPKR	Speaker
P8	CPU FAN	CPU fan header
P11	CHF Fan	Rear system fan
P23	P23 FRONT AUD	Front audio header
P24	P24 FRONT USB	Front panel USB header

Designator	Silk screen	Component
P26	P26 FRONT USB3	Front panel USB3 header (blue)
P52	COMB	Serial port header
P60-P62	SATA0-SATA2	SATA connectors
P63	SATA3	SATA/eSATA connector
P70	EXT	STONE card connector
P124	P124 HOOD LOCK	Side access panel solenoid lock header
P125	HSENSE	Hood sensor connector (3 pin)
P129	TBT	TBT connector (2x4-pin)
P150	Media	int-Media connector (6-pin)
P152	Media	USB 3.0 Media card reader
P160	SATA PWR0	SATA Power connector (2x3 pin)
SW50	SW50 CMOS	Clear CMOS switch/push button
XBT1	XBT1 BAT	Battery holder
XMM1 - XMM4	XMM1 - XMM4 DIMM1 - DIMM4	Memory slots
XU1	XU1	Primary CPU socket

Index

A
audible codes 80

B
beep codes 80
BIOS
  clearing and resetting 83
BIOS ROM 17
booting options
  Full Boot 75
  Quick Boot 75

C
Cable management 45
CMOS 82
components
  SFF 2
  SFF front panel 2
  SFF rear panel 3
  tower 8
  tower front panel 8
  tower rear panel 9
Configuring RAID devices 88
  maximum hard drives allowed 88
  SATA RAID 89
Customer Self Repair 65

D
Desktop management 29
  Altiris Client Management Solutions 31
  FailSafe Boot Block ROM 32
  Fault notification and recovery 39
  HP Client Manager Software 31
  HP SoftPaq Download Manager 32
  HPQFlash 32
  Initial configuration 30
  programmable power button 40
  Remote ROM Flash 32
  Remote system install 30
  ROM Flash 32
  System Software Manager 32
  Updating software 31
  Workstation security 33
Diagnostics 60
Diagnostics and troubleshooting
  Diagnosis guidelines 61
diagnostics and troubleshooting
  locating ID labels 61
  locating warranty info 61
dimensions, workstation 14
DIMM configurations, supported 53
DIMM installation order
  SFF workstation 54
  Tower workstation 55

E
environmental specifications 14
error
  codes 80
  messages 75
Expansion card slot identification
  SFF Workstation 48
  Tower Workstation 50

F
flashing LEDs 80

H
HP PC Hardware Diagnostics (UEFI)
  downloading 74

L
links
  Contact information for HP US 63
  HP Chat Support 63
  HP Customer Self Repair 65

M
Memory
  DIMM installation guidelines 53

N
numeric error codes 75

O
Operating system setup 85

P
Password configuration 82
Power supply
  Expansion card configuration restrictions 47
  power consumption 57
  resetting 57
  specifications 56
Product features
  Computer components 4
  ERP compliance mode 16
  Hyper-threading 17
  Physical characteristics 7, 13
  SATA Power Management 17
  System board architecture 6, 12
  Turbo Boost 17
Product overview 1

R
Replacing components
  Battery 45
  cable management 45
  Component locations 5, 11
  CPU (processor) and CPU heatsink 46
  expansion slots 47
  guidelines 44
  hard drive 51
  information and guidelines 41
  Memory 53
  power supply 56
  Service considerations 42
  warnings and cautions 41

S
SFF
  components 2
  environmental specifications 14
  front panel components 2
  rear panel components 3
  weights and dimensions 14

specifications
environmental 14
workstation 14
support
advisories 63
before calling 60
calling 60
customer bulletins 63
customer notices 63
HP Chat Support 63
HP Support Center 63
online 63
security bulletins 63
System board components 5
System board designators 92
System management 16

T

tower
components 8
environmental specifications 14
front panel components 8
rear panel components 9
weights and dimensions 14
troubleshooing
Customer Self Repair 65
suggestions 64
suggestions, at startup 64
suggestions, during operation 64
Troubleshooting 60
troubleshooting
locating ID labels 61
locating warranty info 61
resources and tools 63

U

urls
Contact information for HP US 63
HP Chat Support 63
HP Customer Self Repair 65

W

weights, workstation 14
Workstation setup
Ensuring proper ventilation 15