Hewlett Packard
Enterprise

HPE ProLiant DL180 Gen9 Server

Maintenance and Service Guide

Abstract

This guide describes identification and maintenance procedures, diagnostic tools, specifications and requirements for hardware components and software. This guide is for an experienced service technician. Hewlett Packard Enterprise assumes that you are qualified in the servicing of computer equipment, trained in recognizing hazards in products, and are familiar with weight and stability precautions.

Part Number: 775438-003R
November 2015
Edition: 4

© Copyright 2014, 2015 Hewlett Packard Enterprise Development LP

The information contained herein is subject to change without notice. The only warranties for Hewlett Packard Enterprise products and services are set forth in the express warranty statements accompanying such products and services. Nothing herein should be construed as constituting an additional warranty. Hewlett Packard Enterprise shall not be liable for technical or editorial errors or omissions contained herein.

Links to third-party websites take you outside the Hewlett Packard Enterprise website. Hewlett Packard Enterprise has no control over and is notresponsible for information outside the Hewlett Packard Enterprise website.

Linux® is the registered trademark of Linus Torvalds in the U.S. and other countries.

Microsoft® and Windows® are either registered trademarks or trademarks of Microsoft Corporation in the United States and/or other countries.

microSD is a trademark or a registered trademark of SD-3C in the United States, other countries or both.

Red Hat® is a registered trademark of Red Hat, Inc. in the United States and other countries.

VMware® is a registered trademark of trademark of VMware, Inc. in the United States and/or other jurisdictions.

Contents

Customer self repair 6
Parts only warranty service 6
Illustrated parts catalog 16
Mechanical components 16
System components 19
Removal and replacement procedures 24
Required tools 24
Safety considerations 24
Preventing electrostatic discharge 24
Symbols on equipment 24
Server warnings and cautions 25
Rack warnings 25
Preparation procedures 26
Remove the security bezel (optional) 27
Power down the server 27
Extend the server from the rack 27
Access the product rear panel 30
Remove the server from the rack 30
Remove the PCI riser cages 31
Remove the air baffle 32
Remove the fan cage 33
Non-hot-plug drive carrier 34
Non-hot-plug drive 34
Hot-plug drive blanks 35
Hot-plug drive 36
Access panel 37
4-bay and 8-bay LFF non-hot-plug drive cable assemblies 38
4-bay and 8-bay LFF hot-plug drive backplanes 40
8-bay SFF hot-plug drive backplane 42
HPE Smart Storage Battery 43
FBWC module 44
M.2 SSD enablement kit 46
Optical drive 48
Fan and fan blank 49
Fan population guidelines 49
Fan blank 50
Hot-swap fan 51
DIMM 52
Heatsink 53
Processor 55
Expansion board 59
Two-slot and three-slot PCIe riser boards 60
FlexibleLOM riser board 61
System battery 63
Dedicated iLO management module 65
Enabling the dedicated iLO management module 66
Front I/O assemblies for LFF and SFF chassis using thumbscrew rack ears 67
Quick-release latch rack ear assembly 69
Pull tab cage for SFF chassis using quick-release latch rack ears 71
System board 72
HPE 550-W Power Supply (non-hot plug) 81
Hot-plug power input module 82
RPS backplane 83

HP Trusted Platform Module 85
Troubleshooting 86
Troubleshooting resources 86
Diagnostic tools 87
Product QuickSpecs 87
HPE iLO 87
Active Health System 87
HPE ProLiant Pre-boot Health Summary 88
Integrated Management Log 89
HPE UEFI System Utilities 89
Using UEFI System Utilities 89
Embedded Diagnostics option 90
Re-entering the server serial number and product ID 90
HPE Insight Diagnostics 90
HPE Insight Diagnostics survey functionality 91
HPE Insight Remote Support 91
USB support 91
External USB functionality 92
HPE Smart Storage Administrator 92
Automatic Server Recovery 92
Component identification 93
Front panel components 93
Serial label pull tab information 94
Front panel LEDs and buttons 94
Front panel LED power fault codes 96
Rear panel components 97
Rear panel LEDs 97
PCIe riser board slot definitions 98
System board components 100
DIMM slot locations 101
System maintenance switch 101
NMI functionality 102
Drive numbering 102
HPE SmartDrive LED definitions 103
Fan locations 104
Cabling 105
Cabling overview 105
Storage cabling 105
4-bay LFF non-hot-plug SATA drive cabling 106
8-bay LFF non-hot-plug SATA drive cabling 106
8-bay LFF hot-plug SATA drive cabling 107
8-bay LFF hot-plug SAS/SATA drive cabling 107
8-bay SFF hot-plug SATA drive cabling 108
8-bay SFF hot-plug SAS/SATA drive cabling 109
16-bay SFF hot-plug SAS/SATA drive cabling 110
M.2 SSD cabling 111
FBWC module backup power cabling 111
HPE Smart Storage Battery cabling 112
Optical drive cabling 113
Fan cabling 113
GPU power drive cabling 114
FlexibleLOM sideband signal cabling 114
Power supply cabling 115
HPE 550-W Power Supply cabling (non-hot-plug) 115
HPE Redundant Power Supply cabling (hot-plug) 115
Front panel cabling 116
Specifications 118

Environmental specifications 118
Mechanical specifications 118
Power supply specifications 119
Hot-plug power supply calculations 119
Acronyms and abbreviations 120
Documentation feedback 123
Index 124

Customer self repair

Hewlett Packard Enterprise products are designed with many Customer Self Repair (CSR) parts to minimize repair time and allow for greater flexibility in performing defective parts replacement. If during the diagnosis period Hewlett Packard Enterprise (or Hewlett Packard Enterprise service providers or service partners) identifies that the repair can be accomplished by the use of a CSR part, Hewlett Packard Enterprise will ship that part directly to you for replacement. There are two categories of CSR parts:

- **Mandatory**—Parts for which customer self repair is mandatory. If you request Hewlett Packard Enterprise to replace these parts, you will be charged for the travel and labor costs of this service.
- **Optional**—Parts for which customer self repair is optional. These parts are also designed for customer self repair. If, however, you require that Hewlett Packard Enterprise replace them for you, there may or may not be additional charges, depending on the type of warranty service designated for your product.

NOTE: Some Hewlett Packard Enterprise parts are not designed for customer self repair. In order to satisfy the customer warranty, Hewlett Packard Enterprise requires that an authorized service provider replace the part. These parts are identified as "No" in the Illustrated Parts Catalog.

Based on availability and where geography permits, CSR parts will be shipped for next business day delivery. Same day or four-hour delivery may be offered at an additional charge where geography permits. If assistance is required, you can call the Hewlett Packard Enterprise Support Center and a technician will help you over the telephone. Hewlett Packard Enterprise specifies in the materials shipped with a replacement CSR part whether a defective part must be returned to Hewlett Packard Enterprise. In cases where it is required to return the defective part to Hewlett Packard Enterprise, you must ship the defective part back to Hewlett Packard Enterprise within a defined period of time, normally five (5) business days. The defective part must be returned with the associated documentation in the provided shipping material. Failure to return the defective part may result in Hewlett Packard Enterprise billing you for the replacement. With a customer self repair, Hewlett Packard Enterprise will pay all shipping and part return costs and determine the courier/carrier to be used.

For more information about the Hewlett Packard Enterprise CSR program, contact your local service provider. For the North American program, go to the Hewlett Packard Enterprise CSR website (http://www.hpe.com/support/selfrepair).

Parts only warranty service

Your Hewlett Packard Enterprise Limited Warranty may include a parts only warranty service. Under the terms of parts only warranty service, Hewlett Packard Enterprise will provide replacement parts free of charge.

For parts only warranty service, CSR part replacement is mandatory. If you request Hewlett Packard Enterprise to replace these parts, you will be charged for the travel and labor costs of this service.

Réparation par le client (CSR)

Les produits Hewlett Packard Enterprise comportent de nombreuses pièces CSR (Customer Self Repair = réparation par le client) afin de minimiser les délais de réparation et faciliter le remplacement des pièces défectueuses. Si pendant la période de diagnostic, Hewlett Packard Enterprise (ou ses partenaires ou mainteneurs agréés) détermine que la réparation peut être effectuée à l'aide d'une pièce CSR, Hewlett Packard Enterprise vous l'envoie directement. Il existe deux catégories de pièces CSR :

- **Obligatoire—**Pièces pour lesquelles la réparation par le client est obligatoire. Si vous demandez à Hewlett Packard Enterprise de remplacer ces pièces, les coûts de déplacement et main d'œuvre du service vous seront facturés.
- **Facultatif—**Pièces pour lesquelles la réparation par le client est facultative. Ces pièces sont également conçues pour permettre au client d'effectuer lui-même la réparation. Toutefois, si vous demandez à Hewlett Packard Enterprise de remplacer ces pièces, l'intervention peut ou non vous être facturée, selon le type de garantie applicable à votre produit.

REMARQUE: Certaines pièces Hewlett Packard Enterprise ne sont pas conçues pour permettre au client d'effectuer lui-même la réparation. Pour que la garantie puisse s'appliquer, Hewlett Packard Enterprise exige que le remplacement de la pièce soit effectué par un Mainteneur Agréé. Ces pièces sont identifiées par la mention "Non" dans le Catalogue illustré.

Les pièces CSR sont livrées le jour ouvré suivant, dans la limite des stocks disponibles et selon votre situation géographique. Si votre situation géographique le permet et que vous demandez une livraison le jour même ou dans les 4 heures, celle-ci vous sera facturée. Pour toute assistance, appelez le Centre d'assistance Hewlett Packard Enterprise pour qu'un technicien vous aide au téléphone Dans les documents envoyés avec la pièce de rechange CSR, Hewlett Packard Enterprise précise s'il est nécessaire de lui retourner la pièce défectueuse. Si c'est le cas, vous devez le faire dans le délai indiqué, généralement cinq (5) jours ouvrés. La pièce et sa documentation doivent être retournées dans l'emballage fourni. Si vous ne retournez pas la pièce défectueuse, Hewlett Packard Enterprise se réserve le droit de vous facturer les coûts de remplacement. Dans le cas d'une pièce CSR, Hewlett Packard Enterprise supporte l'ensemble des frais d'expédition et de retour, et détermine la société de courses ou le transporteur à utiliser.

Pour plus d'informations sur le programme CSR de Hewlett Packard Enterprise, contactez votre Mainteneur Agrée local. Pour plus d'informations sur ce programme en Amérique du Nord, consultez le site Web Hewlett Packard Enterprise (http://www.hpe.com/support/selfrepair).

Service de garantie "pièces seules"

Votre garantie limitée Hewlett Packard Enterprise peut inclure un service de garantie "pièces seules". Dans ce cas, les pièces de rechange fournies par Hewlett Packard Enterprise ne sont pas facturées.

Dans le cadre de ce service, la réparation des pièces CSR par le client est obligatoire. Si vous demandez à Hewlett Packard Enterprise de remplacer ces pièces, les coûts de déplacement et main d'œuvre du service vous seront facturés.

Riparazione da parte del cliente

Per abbreviare i tempi di riparazione e garantire una maggiore flessibilità nella sostituzione di parti difettose, i prodotti Hewlett Packard Enterprise sono realizzati con numerosi componenti che possono essere riparati direttamente dal cliente (CSR, Customer Self Repair). Se in fase di diagnostica Hewlett Packard Enterprise (o un centro di servizi o di assistenza Hewlett Packard Enterprise) identifica il guasto come riparabile mediante un ricambio CSR, Hewlett Packard Enterprise lo spedirà direttamente al cliente per la sostituzione. Vi sono due categorie di parti CSR:

- **Obbligatorie—**Parti che devono essere necessariamente riparate dal cliente. Se il cliente ne affida la riparazione ad Hewlett Packard Enterprise, deve sostenere le spese di spedizione e di manodopera per il servizio.
- **Opzionali—**Parti la cui riparazione da parte del cliente è facoltativa. Si tratta comunque di componenti progettati per questo scopo. Se tuttavia il cliente ne richiede la sostituzione ad Hewlett Packard Enterprise, potrebbe dover sostenere spese addizionali a seconda del tipo di garanzia previsto per il prodotto.

NOTA: alcuni componenti Hewlett Packard Enterprise non sono progettati per la riparazione da parte del cliente. Per rispettare la garanzia, Hewlett Packard Enterprise richiede che queste parti siano sostituite da un centro di assistenza autorizzato. Tali parti sono identificate da un "No" nel Catalogo illustrato dei componenti.

In base alla disponibilità e alla località geografica, le parti CSR vengono spedite con consegna entro il giorno lavorativo seguente. La consegna nel giorno stesso o entro quattro ore è offerta con un supplemento di costo solo in alcune zone. In caso di necessità si può richiedere l'assistenza telefonica di un addetto del centro di supporto tecnico Hewlett Packard Enterprise. Nel materiale fornito con una parte di ricambio CSR, Hewlett Packard Enterprise specifica se il cliente deve restituire dei component. Qualora sia richiesta la resa ad Hewlett Packard Enterprise del componente difettoso, lo si deve spedire ad Hewlett Packard Enterprise entro un determinato periodo di tempo, generalmente cinque (5) giorni lavorativi. Il componente difettoso deve essere restituito con la documentazione associata nell'imballo di spedizione fornito. La mancata restituzione del componente può comportare la fatturazione del ricambio da parte di Hewlett Packard Enterprise. Nel caso di riparazione da parte del cliente, Hewlett Packard Enterprise sostiene tutte le spese di spedizione e resa e sceglie il corriere/vettore da utilizzare.

Per ulteriori informazioni sul programma CSR di Hewlett Packard Enterprise, contattare il centro di assistenza di zona. Per il programma in Nord America fare riferimento al sito Web (http://www.hpe.com/support/selfrepair).

Servizio di garanzia per i soli componenti

La garanzia limitata Hewlett Packard Enterprise può includere un servizio di garanzia per i soli componenti. Nei termini di garanzia del servizio per i soli componenti, Hewlett Packard Enterprise fornirà gratuitamente le parti di ricambio.

Per il servizio di garanzia per i soli componenti è obbligatoria la formula CSR che prevede la riparazione da parte del cliente. Se il cliente invece richiede la sostituzione ad Hewlett Packard Enterprise dovrà sostenere le spese di spedizione e di manodopera per il servizio.

Customer Self Repair

Hewlett Packard Enterprise Produkte enthalten viele CSR-Teile (Customer Self Repair), um Reparaturzeiten zu minimieren und höhere Flexibilität beim Austausch defekter Bauteile zu ermöglichen. Wenn Hewlett Packard Enterprise (oder ein Hewlett Packard Enterprise Servicepartner) bei der Diagnose feststellt, dass das Produkt mithilfe eines CSR-Teils repariert werden kann, sendet Ihnen Hewlett Packard Enterprise dieses Bauteil zum Austausch direkt zu. CSR-Teile werden in zwei Kategorien unterteilt:

- **Zwingend**—Teile, für die das Customer Self Repair-Verfahren zwingend vorgegeben ist. Wenn Sie den Austausch dieser Teile von Hewlett Packard Enterprise vornehmen lassen, werden Ihnen die Anfahrt- und Arbeitskosten für diesen Service berechnet.
- **Optional**—Teile, für die das Customer Self Repair-Verfahren optional ist. Diese Teile sind auch für Customer Self Repair ausgelegt. Wenn Sie jedoch den Austausch dieser Teile von Hewlett Packard Enterprise vornehmen lassen möchten, können bei diesem Service je nach den für Ihr Produkt vorgesehenen Garantiebedingungen zusätzliche Kosten anfallen.

HINWEIS: Einige Hewlett Packard Enterprise Teile sind nicht für Customer Self Repair ausgelegt. Um den Garantieanspruch des Kunden zu erfüllen, muss das Teil von einem Hewlett Packard Enterprise Servicepartner ersetzt werden. Im illustrierten Teilekatalog sind diese Teile mit „No“ bzw. „Nein“ gekennzeichnet.

CSR-Teile werden abhängig von der Verfügbarkeit und vom Lieferziel am folgenden Geschäftstag geliefert. Für bestimmte Standorte ist eine Lieferung am selben Tag oder innerhalb von vier Stunden gegen einen Aufpreis verfügbar. Wenn Sie Hilfe benötigen, können Sie das Hewlett Packard Enterprise

Support Center anrufen und sich von einem Mitarbeiter per Telefon helfen lassen. Den Materialien von Hewlett Packard Enterprise, die mit einem CSR-Ersatzteil geliefert werden, können Sie entnehmen, ob das defekte Teil an Hewlett Packard Enterprise zurückgeschickt werden muss. Wenn es erforderlich ist, das defekte Teil an Hewlett Packard Enterprise zurückzuschicken, müssen Sie dies innerhalb eines vorgegebenen Zeitraums tun, in der Regel innerhalb von fünf (5) Geschäftstagen. Das defekte Teil muss mit der zugehörigen Dokumentation in der Verpackung zurückgeschickt werden, die im Lieferumfang enthalten ist. Wenn Sie das defekte Teil nicht zurückschicken, kann Hewlett Packard Enterprise Ihnen das Ersatzteil in Rechnung stellen. Im Falle von Customer Self Repair kommt Hewlett Packard Enterprise für alle Kosten für die Lieferung und Rücksendung auf und bestimmt den Kurier-/Frachtdienst.

Weitere Informationen über das Hewlett Packard Enterprise Customer Self Repair Programm erhalten Sie von Ihrem Servicepartner vor Ort. Informationen über das CSR-Programm in Nordamerika finden Sie auf der Hewlett Packard Enterprise Website unter (http://www.hpe.com/support/selfrepair).

Parts-only Warranty Service (Garantieservice ausschließlich für Teile)

Ihre Hewlett Packard Enterprise Garantie umfasst möglicherweise einen Parts-only Warranty Service (Garantieservice ausschließlich für Teile). Gemäß den Bestimmungen des Parts-only Warranty Service stellt Hewlett Packard Enterprise Ersatzteile kostenlos zur Verfügung.

Für den Parts-only Warranty Service ist das CSR-Verfahren zwingend vorgegeben. Wenn Sie den Austausch dieser Teile von Hewlett Packard Enterprise vornehmen lassen, werden Ihnen die Anfahrt- und Arbeitskosten für diesen Service berechnet.

Reparaciones del propio cliente

Los productos de Hewlett Packard Enterprise incluyen muchos componentes que el propio usuario puede reemplazar (Customer Self Repair, CSR) para minimizar el tiempo de reparación y ofrecer una mayor flexibilidad a la hora de realizar sustituciones de componentes defectuosos. Si, durante la fase de diagnóstico, Hewlett Packard Enterprise (o los proveedores o socios de servicio de Hewlett Packard Enterprise) identifica que una reparación puede llevarse a cabo mediante el uso de un componente CSR, Hewlett Packard Enterprise le enviará dicho componente directamente para que realice su sustitución. Los componentes CSR se clasifican en dos categorías:

- **Obligatorio**—Componentes cuya reparación por parte del usuario es obligatoria. Si solicita a Hewlett Packard Enterprise que realice la sustitución de estos componentes, tendrá que hacerse cargo de los gastos de desplazamiento y de mano de obra de dicho servicio.
- **Opcional**—Componentes cuya reparación por parte del usuario es opcional. Estos componentes también están diseñados para que puedan ser reparados por el usuario. Sin embargo, si precisa que Hewlett Packard Enterprise realice su sustitución, puede o no conllevar costes adicionales, dependiendo del tipo de servicio de garantía correspondiente al producto.

NOTA: Algunos componentes de Hewlett Packard Enterprise no están diseñados para que puedan ser reparados por el usuario. Para que el usuario haga valer su garantía, Hewlett Packard Enterprise pone como condición que un proveedor de servicios autorizado realice la sustitución de estos componentes. Dichos componentes se identifican con la palabra "No" en el catálogo ilustrado de componentes.

Según la disponibilidad y la situación geográfica, los componentes CSR se enviarán para que lleguen a su destino al siguiente día laborable. Si la situación geográfica lo permite, se puede solicitar la entrega en el mismo día o en cuatro horas con un coste adicional. Si precisa asistencia técnica, puede llamar al Centro de asistencia técnica de Hewlett Packard Enterprise y recibirá ayuda telefónica por parte de un técnico. Con el envío de materiales para la sustitución de componentes CSR, Hewlett Packard Enterprise especificará si los componentes defectuosos deberán devolverse a Hewlett Packard Enterprise. En aquellos casos en los que sea necesario devolver algún componente a Hewlett Packard Enterprise,

deberá hacerlo en el periodo de tiempo especificado, normalmente cinco días laborables. Los componentes defectuosos deberán devolverse con toda la documentación relacionada y con el embalaje de envío. Si no enviara el componente defectuoso requerido, Hewlett Packard Enterprise podrá cobrarle por el de sustitución. En el caso de todas sustituciones que lleve a cabo el cliente, Hewlett Packard Enterprise se hará cargo de todos los gastos de envío y devolución de componentes y escogerá la empresa de transporte que se utilice para dicho servicio.

Para obtener más información acerca del programa de Reparaciones del propio cliente de Hewlett Packard Enterprise, póngase en contacto con su proveedor de servicios local. Si está interesado en el programa para Norteamérica, visite la página web de Hewlett Packard Enterprise CSR (http://www.hpe.com/support/selfrepair).

Servicio de garantía exclusivo de componentes

La garantía limitada de Hewlett Packard Enterprise puede que incluya un servicio de garantía exclusivo de componentes. Según las condiciones de este servicio exclusivo de componentes, Hewlett Packard Enterprise le facilitará los componentes de repuesto sin cargo adicional alguno.

Para este servicio de garantía exclusivo de componentes, es obligatoria la sustitución de componentes por parte del usuario (CSR). Si solicita a Hewlett Packard Enterprise que realice la sustitución de estos componentes, tendrá que hacerse cargo de los gastos de desplazamiento y de mano de obra de dicho servicio.

Customer Self Repair

Veel onderdelen in Hewlett Packard Enterprise producten zijn door de klant zelf te repareren, waardoor de reparatieduur tot een minimum beperkt kan blijven en de flexibiliteit in het vervangen van defecte onderdelen groter is. Deze onderdelen worden CSR-onderdelen (Customer Self Repair) genoemd. Als Hewlett Packard Enterprise (of een Hewlett Packard Enterprise Service Partner) bij de diagnose vaststelt dat de reparatie kan worden uitgevoerd met een CSR-onderdeel, verzendt Hewlett Packard Enterprise dat onderdeel rechtstreeks naar u, zodat u het defecte onderdeel daarmee kunt vervangen. Er zijn twee categorieën CSR-onderdelen:

- **Verplicht**—Onderdelen waarvoor reparatie door de klant verplicht is. Als u Hewlett Packard Enterprise verzoekt deze onderdelen voor u te vervangen, worden u voor deze service reiskosten en arbeidsloon in rekening gebracht.
- **Optioneel**—Onderdelen waarvoor reparatie door de klant optioneel is. Ook deze onderdelen zijn ontworpen voor reparatie door de klant. Als u echter Hewlett Packard Enterprise verzoekt deze onderdelen voor u te vervangen, kunnen daarvoor extra kosten in rekening worden gebracht, afhankelijk van het type garantieservice voor het product.

OPMERKING: Sommige Hewlett Packard Enterprise onderdelen zijn niet ontwikkeld voor reparatie door de klant. In verband met de garantievoorwaarden moet het onderdeel door een geautoriseerde Service Partner worden vervangen. Deze onderdelen worden in de geïllustreerde onderdelencatalogus aangemerkt met "Nee".

Afhankelijk van de leverbaarheid en de locatie worden CSR-onderdelen verzonden voor levering op de eerstvolgende werkdag. Levering op dezelfde dag of binnen vier uur kan tegen meerkosten worden aangeboden, indien dit mogelijk is gezien de locatie. Indien assistentie is gewenst, belt u het Hewlett Packard Enterprise Support Center om via de telefoon ondersteuning van een technicus te ontvangen. Hewlett Packard Enterprise vermeldt in de documentatie bij het vervangende CSR-onderdeel of het defecte onderdeel aan Hewlett Packard Enterprise moet worden geretourneerd. Als het defecte onderdeel aan Hewlett Packard Enterprise moet worden teruggezonden, moet u het defecte onderdeel binnen een bepaalde periode, gewoonlijk vijf (5) werkdagen, retourneren aan Hewlett Packard Enterprise. Het defecte onderdeel moet met de bijbehorende documentatie worden geretourneerd in het meegeleverde verpakkingsmateriaal. Als u het defecte onderdeel niet terugzendt, kan Hewlett Packard

Enterprise u voor het vervangende onderdeel kosten in rekening brengen. Bij reparatie door de klant betaalt Hewlett Packard Enterprise alle verzendkosten voor het vervangende en geretourneerde onderdeel en kiest Hewlett Packard Enterprise zelf welke koerier/transportonderneming hiervoor wordt gebruikt.

Neem contact op met een Service Partner voor meer informatie over het Customer Self Repair programma van Hewlett Packard Enterprise. Informatie over Service Partners vindt u op de Hewlett Packard Enterprise website (http://www.hpe.com/support/selfrepair).

Garantieservice "Parts Only"

Het is mogelijk dat de Hewlett Packard Enterprise garantie alleen de garantieservice "Parts Only" omvat. Volgens de bepalingen van de Parts Only garantieservice zal Hewlett Packard Enterprise kosteloos vervangende onderdelen ter beschikking stellen.

Voor de Parts Only garantieservice is vervanging door CSR-onderdelen verplicht. Als u Hewlett Packard Enterprise verzoekt deze onderdelen voor u te vervangen, worden u voor deze service reiskosten en arbeidsloon in rekening gebracht

Reparo feito pelo cliente

Os produtos da Hewlett Packard Enterprise são projetados com muitas peças para reparo feito pelo cliente (CSR) de modo a minimizar o tempo de reparo e permitir maior flexibilidade na substituição de peças com defeito. Se, durante o período de diagnóstico, a Hewlett Packard Enterprise (ou fornecedores/parceiros da Hewlett Packard Enterprise) concluir que o reparo pode ser efetuado pelo uso de uma peça CSR, a Hewlett Packard Enterprise enviará a peça diretamente ao cliente. Há duas categorias de peças CSR:

- **Obrigatória**—Peças cujo reparo feito pelo cliente é obrigatório. Se desejar que a Hewlett Packard Enterprise substitua essas peças, serão cobradas as despesas de transporte e mão-de-obra do serviço.
- **Opcional**—Peças cujo reparo feito pelo cliente é opcional. Essas peças também são projetadas para o reparo feito pelo cliente. No entanto, se desejar que a Hewlett Packard Enterprise as substitua, pode haver ou não a cobrança de taxa adicional, dependendo do tipo de serviço de garantia destinado ao produto.

OBSERVAÇÃO: Algumas peças da Hewlett Packard Enterprise não são projetadas para o reparo feito pelo cliente. A fim de cumprir a garantia do cliente, a Hewlett Packard Enterprise exige que um técnico autorizado substitua a peça. Essas peças estão identificadas com a marca "No" (Não), no catálogo de peças ilustrado.

Conforme a disponibilidade e o local geográfico, as peças CSR serão enviadas no primeiro dia útil após o pedido. Onde as condições geográficas permitirem, a entrega no mesmo dia ou em quatro horas pode ser feita mediante uma taxa adicional. Se precisar de auxílio, entre em contato com o Centro de suporte técnico da Hewlett Packard Enterprise para que um técnico o ajude por telefone. A Hewlett Packard Enterprise especifica nos materiais fornecidos com a peça CSR de reposição se a peça com defeito deve ser devolvida à Hewlett Packard Enterprise. Nos casos em que isso for necessário, é preciso enviar a peça com defeito à Hewlett Packard Enterprise, você deverá enviar a peça com defeito de volta para a Hewlett Packard Enterprise dentro do período de tempo definido, normalmente em 5 (cinco) dias úteis. A peça com defeito deve ser enviada com a documentação correspondente no material de transporte fornecido. Caso não o faça, a Hewlett Packard Enterprise poderá cobrar a reposição. Para as peças de reparo feito pelo cliente, a Hewlett Packard Enterprise paga todas as despesas de transporte e de devolução da peça e determina a transportadora/serviço postal a ser utilizado.

Para obter mais informações sobre o programa de reparo feito pelo cliente da Hewlett Packard

Enterprise, entre em contato com o fornecedor de serviços local. Para o programa norte-americano, visite o site da Hewlett Packard Enterprise (http://www.hpe.com/support/selfrepair).

Serviço de garantia apenas para peças

A garantia limitada da Hewlett Packard Enterprise pode incluir um serviço de garantia apenas para peças. Segundo os termos do serviço de garantia apenas para peças, a Hewlett Packard Enterprise fornece as peças de reposição sem cobrar nenhuma taxa.

No caso desse serviço, a substituição de peças CSR é obrigatória. Se desejar que a Hewlett Packard Enterprise substitua essas peças, serão cobradas as despesas de transporte e mão-de-obra do serviço.

カスタマーセルフリペア

修理時間を短縮し、故障部品の交換における高い柔軟性を確保するために、Hewlett Packard Enterprise製品には多数のカスタマーセルフリペア（CSR）部品があります。診断の際に、CSR部品を使用すれば修理ができるとHewlett Packard Enterprise（Hewlett Packard EnterpriseまたはHewlett Packard Enterprise正規保守代理店）が判断した場合、Hewlett Packard Enterpriseはその部品を直接、お客様に発送し、お客様に交換していただきます。CSR部品には以下の2種類があります。

- **必須** - カスタマーセルフリペアが必須の部品。当該部品について、もしもお客様がHewlett Packard Enterpriseに交換作業を依頼される場合には、その修理サービスに関する交通費および人件費がお客様に請求されます。
- **任意** - カスタマーセルフリペアが任意である部品。この部品もカスタマーセルフリペア用です。当該部品について、もしもお客様がHewlett Packard Enterpriseに交換作業を依頼される場合には、お買い上げの製品に適用される保証サービス内容の範囲内においては、別途費用を負担していただくことなく保証サービスを受けることができます。

注：Hewlett Packard Enterprise製品の一部の部品は、カスタマーセルフリペアの対象外です。製品の保証を継続するためには、Hewlett Packard EnterpriseまたはHewlett Packard Enterprise正規保守代理店による交換作業が必須となります。部品カタログには、当該部品がカスタマーセルフリペア除外品である旨が記載されています。

部品供給が可能な場合、地域によっては、CSR部品を翌営業日に届くように発送します。また、地域によっては、追加費用を負担いただくことにより同日または4時間以内に届くように発送することも可能な場合があります。サポートが必要なときは、Hewlett Packard Enterpriseサポートセンターに電話していただければ、技術者が電話でアドバイスします。交換用のCSR部品または同梱物には、故障部品をHewlett Packard Enterpriseに返送する必要があるかどうかが表示されています。故障部品をHewlett Packard Enterpriseに返送する必要がある場合は、指定期限内（通常は5営業日以内）に故障部品をHewlett Packard Enterpriseに返送してください。故障部品を返送する場合は、届いた時の梱包箱に関連書類とともに入れてください。故障部品を返送しない場合、Hewlett Packard Enterpriseから部品費用が請求されます。カスタマーセルフリペアの際には、Hewlett Packard Enterpriseは送料および部品返送費を全額負担し、使用する宅配便会社や運送会社を指定します。

部品のみ保証サービス

Hewlett Packard Enterprise保証サービスには、部品のみ保証サービスが適用される場合があります。このサービスでは、交換部品は無償で提供されます。

部品のみ保証サービスにおいては、CSR部品をお客様により交換作業していただくことが必須になります。当該部品について、もしもお客様がHewlett Packard Enterpriseに交換作業を依頼される場合には、その修理サービスに関する交通費および人件費がお客様のご負担となります。

客户自行维修

Hewlett Packard Enterprise 产品提供许多客户自行维修 (CSR) 部件，以尽可能缩短维修时间和在更换缺陷部件方面提供更大的灵活性。如果在诊断期间 Hewlett Packard Enterprise（或Hewlett Packard Enterprise 服务提供商或服务合作伙伴）确定可以通过使用 CSR 部件完成维修，Hewlett Packard Enterprise 将直接把该部件发送给您进行更换。有两类 CSR 部件：

- **强制性的** — 要求客户必须自行维修的部件。如果您请求 Hewlett Packard Enterprise 更换这些部件，则必须为该服务支付差旅费和人工费用。
- **可选的** — 客户可以选择是否自行维修的部件。这些部件也是为客户自行维修设计的。不过，如果您要求 Hewlett Packard Enterprise 为您更换这些部件，则根据为您的产品指定的保修服务类型，Hewlett Packard Enterprise 可能收取或不再收取任何附加费用。

注：某些 Hewlett Packard Enterprise 部件的设计并未考虑客户自行维修。为了满足客户保修的需要，Hewlett Packard Enterprise 要求授权服务提供商更换相关部件。这些部件在部件图解目录中标记为“否”。

CSR 部件将在下一个工作日发运（取决于备货情况和允许的地理范围）。在允许的地理范围内，可在当天或四小时内发运，但要收取额外费用。如果需要帮助，您可以致电 Hewlett Packard Enterprise 技术支持中心，将会有技术人员通过电话为您提供帮助。Hewlett Packard Enterprise 会在随更换的 CSR 部件发运的材料中指明是否必须将有缺陷的部件返还给 Hewlett Packard Enterprise。如果要求您将有缺陷的部件返还给 Hewlett Packard Enterprise，那么您必须在规定的期限内（通常是五 (5) 个工作日）将缺陷部件发给 Hewlett Packard Enterprise。有缺陷的部件必须随所提供的发运材料中的相关文件一起返还。如果未能送还有缺陷的部件，Hewlett Packard Enterprise 可能会要求您支付更换费用。客户自行维修时，Hewlett Packard Enterprise 将承担所有相关运输和部件返回费用，并指定快递商/承运商。

有关 Hewlett Packard Enterprise 客户自行维修计划的详细信息，请与您当地的服务提供商联系。有关北美地区的计划，请访问 Hewlett Packard Enterprise 网站 (http://www.hpe.com/support/selfrepair)。

仅部件保修服务

您的 Hewlett Packard Enterprise 有限保修服务可能涉及仅部件保修服务。根据仅部件保修服务条款的规定，Hewlett Packard Enterprise 将免费提供更换的部件。

仅部件保修服务要求进行 CSR 部件更换。如果您请求 Hewlett Packard Enterprise 更换这些部件，则必须为该服务支付差旅费和人工费用。

客戶自行維修

Hewlett Packard Enterprise 產品設計了許多「客戶自行維修」(CSR) 的零件以減少維修時間，並且使得更換瑕疵零件時能有更大的彈性。如果在診斷期間，Hewlett Packard Enterprise (或 Hewlett Packard Enterprise 服務供應商或維修夥伴) 辨認出此項維修工作可以藉由使用 CSR 零件來完成，則 Hewlett Packard Enterprise 將直接寄送該零件給您作更換。CSR 零件分為兩種類別：

- **強制的** — 客戶自行維修所使用的零件是強制性的。如果您要求 Hewlett Packard Enterprise 更換這些零件，Hewlett Packard Enterprise 將會向您收取此服務所需的外出費用與勞動成本。
- **選購的** — 客戶自行維修所使用的零件是選購的。這些零件也設計用於客戶自行維修之用。不過，如果您要求 Hewlett Packard Enterprise 為您更換，則可能需要也可能不需要負擔額外的費用，端視針對此產品指定的保固服務類型而定。

備註：某些 Hewlett Packard Enterprise 零件沒有消費者可自行維修的設計。為符合客戶保固，Hewlett Packard Enterprise 需要授權的服務供應商更換零件。這些零件在圖示的零件目錄中，被標示為「否」。

基於材料取得及環境允許的情況下，CSR 零件將於下一個工作日以快遞寄送。在環境的允許下當天或四小時內送達，則可能需要額外的費用。若您需要協助，可致電 Hewlett Packard Enterprise 支援中心，會有一位技術人員透過電話來協助您。不論損壞的零件是否必須退回，Hewlett Packard Enterprise 皆會在與 CSR 替換零件一起運送的材料中註明。若要將損壞的零件退回 Hewlett Packard Enterprise，您必須在指定的一段時間內 (通常為五 (5) 個工作天)，將損壞的零件寄回 Hewlett Packard Enterprise。損壞的零件必須與寄送資料中隨附的相關技術文件一併退還。如果無法退還損壞的零件，Hewlett Packard Enterprise 可能要向您收取替換費用。針對客戶自行維修情形，Hewlett Packard Enterprise 將負責所有運費及零件退還費用，並指定使用何家快遞/貨運公司。

如需 Hewlett Packard Enterprise 的 CSR 方案詳細資訊，請連絡您當地的服務供應商。至於北美方案，請參閱 Hewlett Packard Enterprise 的 CSR 網站frepair (http://www.hpe.com/support/selfrepair)。

僅限零件的保固服務

您的「Hewlett Packard Enterprise 有限保固」可能包含僅限零件的保固服務。在僅限零件的保固服務情況下，Hewlett Packard Enterprise 將免費提供替換零件。

針對僅限零件的保固服務，CSR 零件替換是強制性的。如果您要求 Hewlett Packard Enterprise 更換這些零件，Hewlett Packard Enterprise 將會向您收取此服務所需的外出費用與勞動成本。

고객 셀프 수리

Hewlett Packard Enterprise 제품은 수리 시간을 최소화하고 결함이 있는 부품 교체 시 더욱 융통성을 발휘할 수 있도록 하기 위해 고객 셀프 수리(CSR) 부품을 다량 사용하여 설계되었습니다. 진단 기간 동안 Hewlett Packard Enterprise(또는 Hewlett Packard Enterprise 서비스 공급업체 또는 서비스 협력업체)에서 CSR 부품을 사용하여 수리가 가능하다고 판단되면 Hewlett Packard Enterprise는 해당 부품을 바로 사용자에게 보내어 사용자가 교체할 수 있도록 합니다. CSR 부품에는 두 가지 종류가 있습니다.

- **필수 -** 고객 셀프 수리가 의무 사항인 필수 부품. 사용자가 Hewlett Packard Enterprise에 이 부품의 교체를 요청할 경우 이 서비스에 대한 출장비 및 작업비가 청구됩니다.
- **선택 사항 -** 고객 셀프 수리가 선택 사항인 부품. 이 부품들도 고객 셀프 수리가 가능하도록 설계되었습니다. 하지만 사용자가 Hewlett Packard Enterprise에 이 부품의 교체를 요청할 경우 사용자가 구입한 제품에 해당하는 보증 서비스 유형에 따라 추가 비용 없이 교체가 가능할 수 있습니다.

참고: 일부 Hewlett Packard Enterprise 부품은 고객 셀프 수리가 불가능하도록 설계되었습니다. Hewlett Packard Enterprise는 만족스러운 고객 보증을 위해 공인 서비스 제공업체를 통해 부품을 교체하도록 하고 있습니다. 이러한 부품들은 Illustrated Parts Catalog에 "No"라고 표시되어 있습니다.

CSR 부품은 재고 상태와 지리적 조건이 허용하는 경우 다음 영업일 납품이 가능하도록 배송이 이루어집니다. 지리적 조건이 허용하는 경우 추가 비용이 청구되는 조건으로 당일 또는 4시간 배송이 가능할 수도 있습니다. 도움이 필요하시면 Hewlett Packard Enterprise Support Center로 전화하십시오. 전문 기술자가 전화로 도움을 줄 것입니다. Hewlett Packard Enterprise는 결함이 발생한 부품을 Hewlett Packard Enterprise로 반환해야 하는지 여부를 CSR 교체 부품과 함께 배송된 자료에 지정합니다. 결함이 발생한 부품을 Hewlett Packard Enterprise로 반환해야 하는 경우에는 지정된 기간 내(통상 영업일 기준 5일)에 Hewlett Packard Enterprise로 반환해야 합니다. 이때 결함이 발생한 부품은 제공된 포장 재료에 넣어 관련 설명서와 함께 반환해야 합니다. 결함이 발생한 부품을 반환하지 않는 경우 Hewlett Packard Enterprise가 교체 부품에 대해 비용을 청구할 수 있습니다. 고객 셀프 수리의 경우, Hewlett Packard Enterprise는 모든 운송 및 부품 반환 비용을 부담하며 이용할 운송업체 및 택배 서비스를 결정합니다.

Hewlett Packard Enterprise CSR 프로그램에 대한 자세한 내용은 가까운 서비스 제공업체에 문의하십시오. 북미 지역의 프로그램에 대해서는 Hewlett Packard Enterprise CSR 웹 사이트(http://www.hpe.com/support/selfrepair)를 참조하십시오.

부품 제공 보증 서비스

Hewlett Packard Enterprise 제한 보증에는 부품 제공 보증 서비스가 포함될 수 있습니다. 이러한 경우 Hewlett Packard Enterprise는 부품 제공 보증 서비스의 조건에 따라 교체 부품만을 무료로 제공합니다.

부품 제공 보증 서비스 제공 시 CSR 부품 교체는 의무 사항입니다. 사용자가 Hewlett Packard Enterprise에 이 부품의 교체를 요청할 경우 이 서비스에 대한 출장비 및 작업비가 청구됩니다.

Illustrated parts catalog

Mechanical components

Hewlett Packard Enterprise continually improves and changes product parts. For complete and current supported parts information, see the Hewlett Packard Enterprise PartSurfer website (http://www.hpe.com/info/partssurfer).

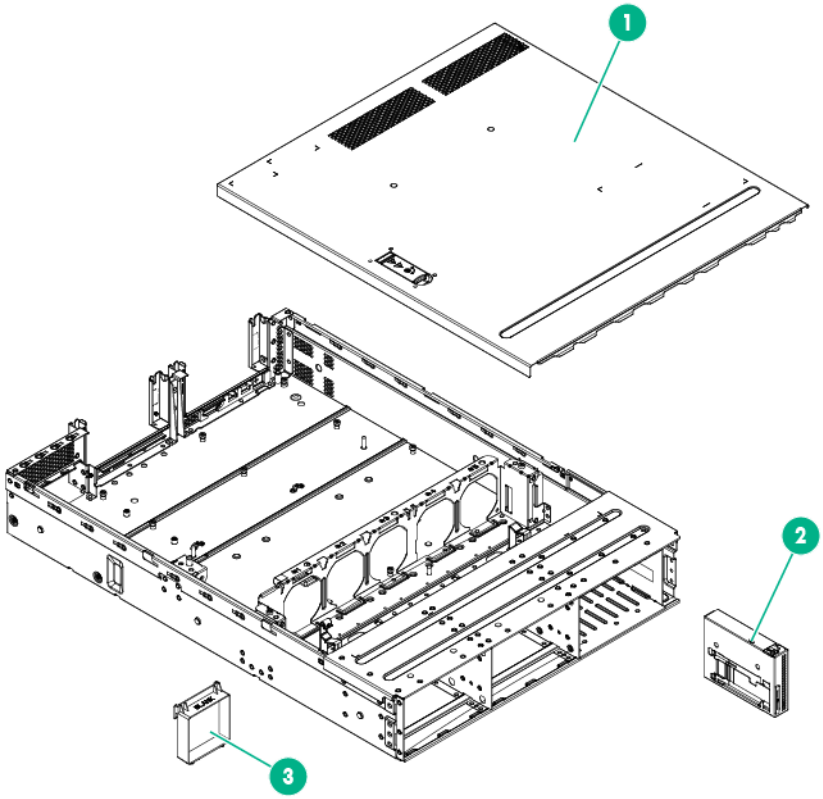

Item	Description	Spare part number	Customer self repair (on page 6)
1	Access panel	779087-001	Mandatory[1]
2	Pull tab cage for SFF drive models with quick-release latch rack ears	785787-001	Optional[2]
3	Fan blank	779092-001	Mandatory[1]

[1]Mandatory—Parts for which customer self repair is mandatory. If you request Hewlett Packard Enterprise to replace these parts, you will be charged for the travel and labor costs of this service.
[2]Optional—Parts for which customer self repair is optional. These parts are also designed for customer self repair. If, however, you require that Hewlett Packard Enterprise replace them for you, there may or may not be additional charges, depending on the type of warranty service designated for your product.
[3]No—Some Hewlett Packard Enterprise parts are not designed for customer self repair. In order to satisfy the customer warranty, Hewlett Packard Enterprise requires that an authorized service provider replace the part. These parts are identified as "No" in the Illustrated Parts Catalog.

[1]Obligatoire—Pièces pour lesquelles le client doit procéder lui-même aux réparations. Si vous demandez à Hewlett Packard Enterprise de procéder au remplacement de ces pièces, les frais de transport et de main d'œuvre pour ce service vous seront facturés.

[2]Facultatif—Pièces pour lesquelles une réparation par le client est facultative. Ces pièces sont également conçues pour que le client puisse procéder lui-même aux réparations. Cependant, les frais supplémentaires engendrés par le remplacement de ces pièces par Hewlett Packard Enterprise dépendent du type de service de garantie désigné pour votre produit.
[3]Non—Certaines pièces Hewlett Packard Enterprise ne sont pas conçues pour être remplacées par le client. Afin de se conformer aux exigences de la garantie la garantie du client, Hewlett Packard Enterprise demande à un fournisseur de services agréé de procéder au remplacement de la pièce. Ces pièces sont signaléespar le mot « Non » dans le Catalogue de pièces illustré.

[1]Obbligatorio—Parti per le quali il cliente è tenuto a effettuare autonomamente la riparazione. Se si richiede l'intervento di Hewlett Packard Enterprise per la sostituzione di queste parti, al cliente verranno addebitate le spese di viaggio e manodopera dell'operazione.
[2]Facoltativo—Parti per le quali la riparazione in autonomia da parte del cliente è facoltativa. Queste parti sono progettate per consentire anche la riparazione da parte del cliente. Tuttavia, se il cliente richiedel'intervento di Hewlett Packard Enterprise per la sostituzione, potrebbero essere addebitate spese aggiuntive a seconda del tipo di garanzia in assistenza previsto per il prodotto.
[3]No—Alcune parti Hewlett Packard Enterprise non sono progettate la riparazione in autonomia da parte del cliente. In base a quanto previsto dalla garanzia per il cliente, Hewlett Packard Enterprise richiede l'intervento di un tecnico autorizzato per la sostituzione della parte. Queste parti sono contrassegnate con"No"nel catalogo parti illustrato.

[1]Zwingend—Teile, für die das Customer Self Repair-Verfahren zwingend vorgegeben ist. Wenn Sie den Austausch dieser Teile von Hewlett Packard Enterprisevornehmen lassen, werden Ihnen die Anfahrt- und Arbeitskosten für diesen Service berechnet.
[2]Optional—Teile, für die das Customer Self Repair-Verfahren optional ist. Diese Teile sind auch für Customer Self Repair ausgelegt. Wenn Sie jedoch den Austausch dieser Teile von Hewlett Packard Enterprisevornehmen lassen möchten, können bei diesem Service je nach den für Ihr Produkt vorgesehenen Garantiebedingungen zusätzliche Kosten anfallen.
[3]Nein—Einige Hewlett Packard Enterprise Teile sind nicht für Customer Self Repair ausgelegt. Um den Garantieanspruch des Kunden zu erfüllen, muss das Teil von einem Hewlett Packard Enterprise Servicepartner ersetzt werden. Im illustrierten Teilekatalog sind diese Teile mit „No“ bzw. „Nein“ gekennzeichnet.

[1]Obligatorio—Componentes cuya reparación por parte del usuario es obligatoria. Si solicita a Hewlett Packard Enterprise que realice la sustitución de estos componentes, tendrá que hacerse cargo de los gastos de desplazamiento y de mano de obra de dicho servicio.
[2]Opcional—Componentes cuya reparación por parte del usuario es opcional. Estos componentes también están diseñados para que puedan ser reparados por el usuario. Sin embargo, si precisa que Hewlett Packard Enterprise realice su sustitución, puede o no conllevar costes adicionales, dependiendo del tipo de servicio de garantía correspondiente al producto.
[3]No—Algunos componentes de Hewlett Packard Enterprise no están diseñados para que puedan ser reparados por el usuario. Para que el usuario haga valer su garantía, Hewlett Packard Enterprise pone como condición que un proveedor de servicios autorizado realice la sustitución de estos componentes. Dichos componentes se identifican con la palabra "No" en el catálogo ilustrado de componentes.

[1]Verplicht—Onderdelen die de klant zelf moet vervangen. Als u Hewlett Packard Enterprise vraagt deze onderdelen te vervangen, worden er reis- en arbeidskosten voor deze service in rekening gebracht.
[2]Optioneel—Onderdelen die de klant zelf kan vervangen. Deze onderdelen zijn ook ontworpen om door de klant zelf te worden vervangen. Als u Hewlett Packard Enterprise verzoekt om deze te vervangen, kan het zijn dat hiervoor extra kosten in rekening worden gebracht, afhankelijk van het soort garantie dat op uw product van toepassing is.
[3]Geen—Sommige onderdelen van Hewlett Packard Enterprise zijn niet ontworpen om door de klant zelf te worden vervangen. Om te voldoen aan de garantievoorwaarden eist Hewlett Packard Enterprise dat een geautoriseerde serviceverlener het onderdeel vervangt. Deze onderdelen worden aangeduid met 'Geen' in de geïllustreerde onderdelencatalogus.

[1]Obrigatório—Peças cujo reparo feito pelo cliente é obrigatório. Se desejar que a Hewlett Packard Enterprise substitua essas peças, serão cobradas as despesas de transporte e mão-de-obra do serviço.
[2]Opcional—Peças cujo reparo feito pelo cliente é opcional. Essas peças também são projetadas para o reparo feito pelo cliente. No entanto, se desejar que a Hewlett Packard Enterprise as substitua, pode haver ou não a cobrança de taxa adicional, dependendo do tipo de serviço de garantia destinado ao produto.
[3]Não—Algumas peças da Hewlett Packard Enterprise não são projetadas para o reparo feito pelo cliente. A fim de cumprir a garantia do cliente, a Hewlett Packard Enterprise exige que um técnico autorizado substitua a peça. Essas peças estão identificadas com a marca "No" (Não), no catálogo de peças ilustrado.

[1]Mandatory：必須 — カスタマーセルフリペアが必須の部品。当該部品について、もしもお客様がHewlett Packard Enterpriseに交換作業を依頼される場合には、その修理サービスに関する交通費および人件費がお客様に請求されます。
[2]Optional：任意 — カスタマーセルフリペアが任意である部品。この部品もカスタマーセルフリペア用です。当該部品について、もしもお客様がHewlett Packard Enterpriseに交換作業を依頼される場合には、お買い上げの製品に適用される保証サービス内容の範囲内においては、別途費用を負担していただくことなく保証サービスを受けることができます。
[3]No：除外 — Hewlett Packard Enterprise製品の一部の部品は、カスタマーセルフリペアの対象外です。製品の保証を継続するためには、Hewlett Packard EnterpriseまたはHewlett Packard Enterprise正規保守代理店による交換作業が必須となります。部品カタログには、当該部品がカスタマーセルフリペア除外品である旨が記載されています。

[1]Mandatory — 客户必须自行维修的部件。如果您请求 Hewlett Packard Enterprise 更换这些部件，则必须为该服务支付差旅费和人工费用。
[2]Optional — 客户可以选择是否自行维修的部件。这些部件也是为客户自行维修设计的。不过，如果您要求 Hewlett Packard Enterprise 为您更换这些部件，则根据为您的产品指定的保修服务类型，Hewlett Packard Enterprise 可能收取或不再收取任何附加费用。
[3]No — 某些 Hewlett Packard Enterprise 部件的设计并未考虑客户自行维修。为了满足客户保修的需要，Hewlett Packard Enterprise 要求授权服务提供商更换相关部件。这些部件在部件图解目录中标记为“否”。

[1]Mandatory — 客戶自行維修所使用的零件是強制性的。如果您要求 Hewlett Packard Enterprise 更換這些零件，Hewlett Packard Enterprise 將會向您收取此服務所需的外出費用與勞動成本。
[2]Optional — 客戶自行維修所使用的零件是選購的。這些零件也設計用於客戶自行維修之用。不過，如果您要求 Hewlett Packard Enterprise 為您更換，則可能需要也可能不需要負擔額外的費用，端視針對此產品指定的保固服務類型而定。
[3]No — 某些 Hewlett Packard Enterprise 零件沒有消費者可自行維修的設計。為符合客戶保固，Hewlett Packard Enterprise 需要授權的服務供應商更換零件。這些零件在圖示的零件目錄中，被標示為「否」。

[1]Mandatory — 고객 셀프 수리가 의무 사항인 필수 부품. 사용자가 Hewlett Packard Enterprise에 이 부품의 교체를 요청할 경우 해당 서비스에 대한 출장비 및 작업비가 청구됩니다.
[2]Optional — 고객 셀프 수리가 선택 사항인 부품. 이러한 부품들도 고객 셀프 수리가 가능하도록 설계되었습니다. 하지만 사용자가 Hewlett Packard Enterprise에 이러한 부품의 교체를 요청할 경우 사용자가 구입한 제품에 해당하는 보증 서비스 유형에 따라 추가 비용 없이 교체가 가능할 수 있습니다.
[3]No — 일부 Hewlett Packard Enterprise 부품은 고객 셀프 수리가 불가능하도록 설계되었습니다. Hewlett Packard Enterprise는 만족스러운 고객 보증을 위해 공인 서비스 제공업체를 통해 부품을 교체하도록 요구하고 있습니다. 이러한 부품들은 Illustrated Parts Catalog에 “No”라고 표시되어 있습니다.

System components

Hewlett Packard Enterprise continually improves and changes product parts. For complete and current supported parts information, see the Hewlett Packard Enterprise PartSurfer website (http://www.hpe.com/info/partssurfer).

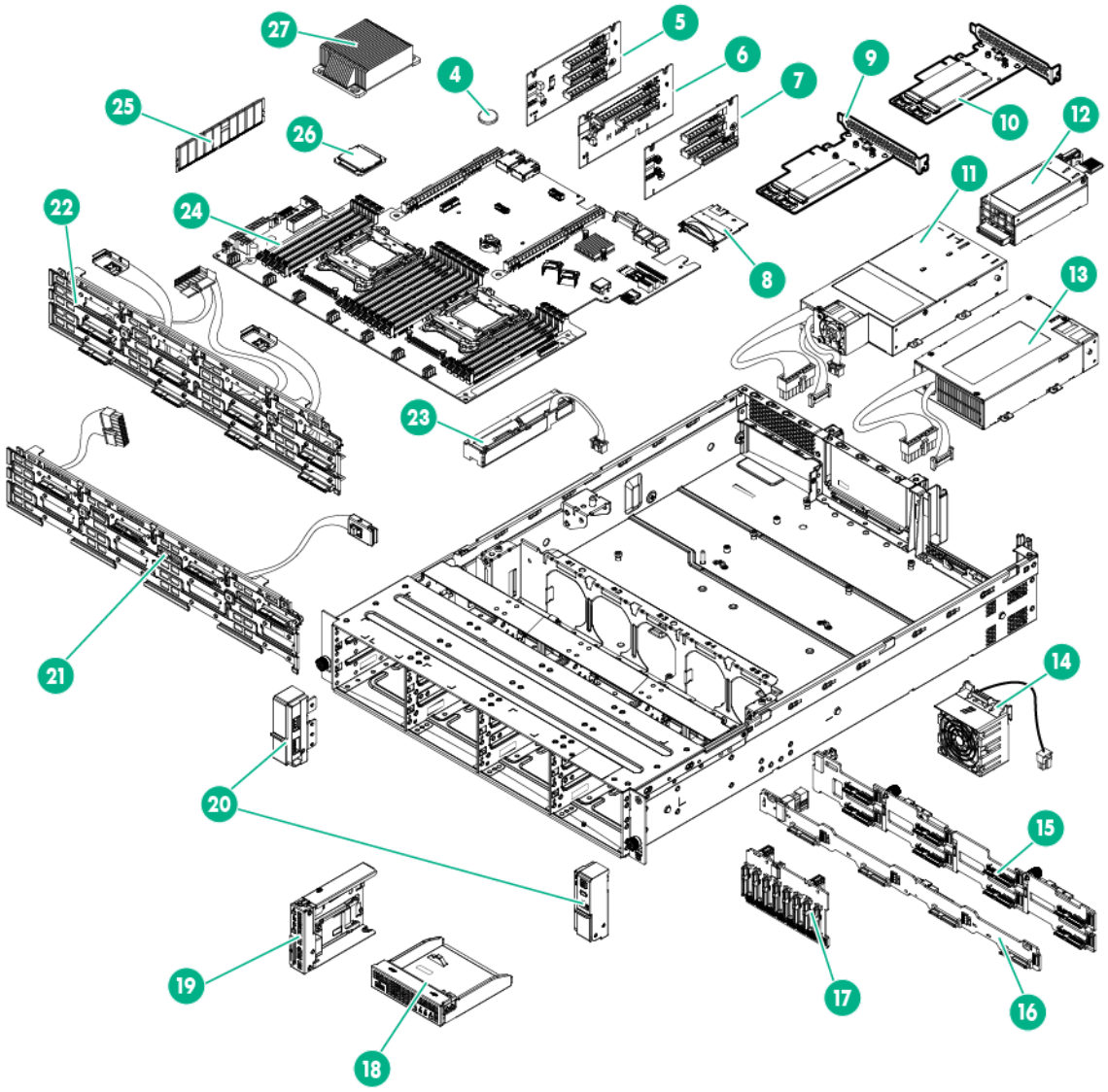

Item	Description	Spare part number	Customer self repair (on page 6)
4	System battery	234556-001	Mandatory[1]
5	Three-slot PCIe riser board	779085-001	Mandatory[1]
6	Two-slot PCIe riser board	779084-001	Mandatory[1]
7	FlexibleLOM riser board	794360-001	Mandatory[1]
8	Dedicated iLO management module	779095-001	Mandatory[1]
9	SATA M.2 SSD single module enablement kit	797907-001	Optional[2]
	a) M.2 SSD enablement board	—	—

Item	Description	Spare part number	Customer self repair (on page 6)
	b) M.2 SSD module	—	—
	c) SATA cable*	—	—
	d) Low-profile board bracket*	—	—
10	SATA M.2 SSD dual module enablement kit	797908-001	Optional[2]
	a) M.2 SSD enablement board	—	—
	b) M.2 SSD modules (2)	—	—
	c) SATA cables (2)	—	—
	d) Low-profile board bracket*	—	—
11	HPE RPS backplane	784636-001	Optional[2]
12	HPE 800-W/900-W Gold AC Power Input Module	754376-001	Mandatory[1]
13	HPE 550-W Power Supply (non-hot-plug)	766879-001	Optional[2]
14	Hot-swap fan	779093-001	Mandatory[1]
15	8-bay LFF hot-plug drive backplane	779083-001	Optional[2]
16	4-bay LFF hot-plug drive backplane	779096-001	Optional[2]
17	8-bay SFF hot-plug drive backplane	780971-001	Optional[2]
18	Front I/O assembly for LFF chassis using thumbscrew rack ears	779088-001	Optional[2]
19	Front I/O assembly for SFF chassis using thumbscrew rack ears	779089-001	Optional[2]
20	Quick-release latch rack ear assembly	779090-001	Optional[2]
21	4-bay LFF non-hot-plug drive cable assembly (includes Mini-SAS and drive power cables)	782466-001	Mandatory[1]
22	8-bay LFF non-hot-plug drive cable assembly (includes Mini-SAS and drive power cables)	782458-001	Mandatory[1]
23	HPE Smart Storage Battery	750450-001	Mandatory[1]
24	System board (include alcohol pad and thermal compound)	779094-001	Optional[2]
25	DIMMs	—	—
	a) 4 GB, single-rank x8 PC4-2133P-R*	804842-001	Mandatory[1]
	b) 4 GB, single-rank x8 PC4-2133R-15	774169-001	Mandatory[1]
	c) 8 GB, single-rank x4 PC4-2133R-15*	774170-001	Mandatory[1]
	d) 8 GB, single-rank x8 PC4-2133P-R*	804843-001	Mandatory[1]
	e) 8 GB, dual-rank x8 PC4-2133P-R*	774171-001	Mandatory[1]
	f) 16 GB, dual-rank x4 PC4-2133R-15*	774172-001	Mandatory[1]
	g) 16 GB, dual-rank x4 PC4-2133P-L*	774173-001	Mandatory[1]
	h) 32 GB, dual-rank x4 PC4-2133P-R*	774175-001	Mandatory[1]
	i) 32 GB, quad-rank x4 PC4-2133P-L*	774174-001	Mandatory[1]
26	Processors (include alcohol pad and thermal compound)	—	—
	a) 1.60-GHz Intel Xeon E5-2603 v3, 6C, 85 W	762441-001	Optional[2]
	b) 1.80-GHz Intel Xeon E5-2630L v3, 8C, 55 W*	762459-001	Optional[2]
	c) 1.80-GHz Intel Xeon E5-2650L v3, 12C, 65 W*	762461-001	Optional[2]

Item	Description	Spare part number	Customer self repair (on page 6)
	d) 1.90-GHz Intel Xeon E5-2609 v3, 6C, 85 W*	762443-001	Optional[2]
	e) 2.30-GHz Intel Xeon E5-2650 v3, 10C, 105 W*	762448-001	Optional[2]
	f) 2.40-GHz Intel Xeon E5-2620 v3, 6C, 85 W*	762445-001	Optional[2]
	g) 2.40-GHz Intel Xeon E5-2630 v3, 8C, 85 W*	762446-001	Optional[2]
	h) 2.60-GHz Intel Xeon E5-2640 v3, 8C, 90 W*	762447-001	Optional[2]
	i) 2.60-GHz Intel Xeon E5-2660 v3, 10C, 105 W*	762449-001	Optional[2]
	j) 3.00-GHz Intel Xeon E5-2623 v3, 4C, 105 W*	780762-001	Optional[2]
27	Heatsink	779091-001	Optional[2]
28	System cables	—	—
	a) 4-bay LFF hot-plug Mini-SAS cable for connection to the onboard storage controller or to an HPE H-series Host Bus Adapter*	782464-001	Mandatory[1]
	b) 4-bay or 12-bay LFF hot-plug Mini-SAS cable for an HPE Smart Array P-series Controller*	782465-001	Mandatory[1]
	c) 8-bay LFF hot-plug Mini-SAS cable assembly*	782459-001	Mandatory[1]
	d) 8-bay LFF hot-plug Mini-SAS Y-cable*	782460-001	Mandatory[1]
	e) 12-bay LFF drive identification signal cable*	782467-001	Mandatory[1]
	f) 8-bay SFF hot-plug Mini-SAS cables*	782461-001	Mandatory[1]
	g) 8-bay SFF hot-plug Mini-SAS Y-cable*	782462-001	Mandatory[1]
	h) 20-pin power cable for LFF drive models*	782455-001	Mandatory[1]
	i) 20-pin power cable for SFF drive models*	782453-001	Mandatory[1]
	j) Optical drive SATA cable*	782457-001	Mandatory[1]
	k) GPU power cable*	782456-001	Mandatory[1]
	l) FlexibleLOM sideband signal cable*	789801-001	Mandatory[1]
29	Trusted Platform Module*	505836-001	No[3]

* Not shown
[1]Mandatory—Parts for which customer self repair is mandatory. If you request Hewlett Packard Enterprise to replace these parts, you will be charged for the travel and labor costs of this service.
[2]Optional—Parts for which customer self repair is optional. These parts are also designed for customer self repair. If, however, you require that Hewlett Packard Enterprise replace them for you, there may or may not be additional charges, depending on the type of warranty service designated for your product.
[3]No—Some Hewlett Packard Enterprise parts are not designed for customer self repair. In order to satisfy the customer warranty, Hewlett Packard Enterprise requires that an authorized service provider replace the part. These parts are identified as "No" in the Illustrated Parts Catalog.

[1]Obligatoire—Pièces pour lesquelles le client doit procéder lui-même aux réparations. Si vous demandez à Hewlett Packard Enterprise de procéder au remplacement de ces pièces, les frais de transport et de main d'œuvre pour ce service vous seront facturés.
[2]Facultatif—Pièces pour lesquelles une réparation par le client est facultative. Ces pièces sont également conçues pour que le client puisse procéder lui-même aux réparations. Cependant, les frais supplémentaires engendrés par le remplacement de ces pièces par Hewlett Packard Enterprise dépendent du type de service de garantie désigné pour votre produit.
[3]Non—Certaines pièces Hewlett Packard Enterprise ne sont pas conçues pour être remplacées par le client. Afin de se conformer aux exigences de la garantie la garantie du client, Hewlett Packard Enterprise demande à un fournisseur de services agréé de procéder au remplacement de la pièce. Ces pièces sont signaléespar le mot « Non » dans le Catalogue de pièces illustré.

[1]Obbligatorio—Parti per le quali il cliente è tenuto a effettuare autonomamente la riparazione. Se si richiede l'intervento di Hewlett Packard Enterprise per la sostituzione di queste parti, al cliente verranno addebitate le spese di viaggio e manodopera dell'operazione.
[2]Facoltativo—Parti per le quali la riparazione in autonomia da parte del cliente è facoltativa. Queste parti sono progettate per consentire anche la riparazione da parte del cliente. Tuttavia, se il cliente richiedel'intervento di Hewlett Packard Enterprise per la sostituzione, potrebbero essere addebitate spese aggiuntive a seconda del tipo di garanzia in assistenza previsto per il prodotto.
[3]No—Alcune parti Hewlett Packard Enterprise non sono progettate la riparazione in autonomia da parte del cliente. In base a quanto previsto dalla garanzia per il cliente, Hewlett Packard Enterprise richiede l'intervento di un tecnico autorizzato per la sostituzione della parte. Queste parti sono contrassegnate con"No"nel catalogo parti illustrato.

[1]Zwingend—Teile, für die das Customer Self Repair-Verfahren zwingend vorgegeben ist. Wenn Sie den Austausch dieser Teile von Hewlett Packard Enterprisevornehmen lassen, werden Ihnen die Anfahrt- und Arbeitskosten für diesen Service berechnet.
[2]Optional—Teile, für die das Customer Self Repair-Verfahren optional ist. Diese Teile sind auch für Customer Self Repair ausgelegt. Wenn Sie jedoch den Austausch dieser Teile von Hewlett Packard Enterprisevornehmen lassen möchten, können bei diesem Service je nach den für Ihr Produkt vorgesehenen Garantiebedingungen zusätzliche Kosten anfallen.
[3]Nein—Einige Hewlett Packard Enterprise Teile sind nicht für Customer Self Repair ausgelegt. Um den Garantieanspruch des Kunden zu erfüllen, muss das Teil von einem Hewlett Packard Enterprise Servicepartner ersetzt werden. Im illustrierten Teilekatalog sind diese Teile mit „No“ bzw. „Nein“ gekennzeichnet.

[1]Obligatorio—Componentes cuya reparación por parte del usuario es obligatoria. Si solicita a Hewlett Packard Enterprise que realice la sustitución de estos componentes, tendrá que hacerse cargo de los gastos de desplazamiento y de mano de obra de dicho servicio.
[2]Opcional—Componentes cuya reparación por parte del usuario es opcional. Estos componentes también están diseñados para que puedan ser reparados por el usuario. Sin embargo, si precisa que Hewlett Packard Enterprise realice su sustitución, puede o no conllevar costes adicionales, dependiendo del tipo de servicio de garantía correspondiente al producto.
[3]No—Algunos componentes de Hewlett Packard Enterprise no están diseñados para que puedan ser reparados por el usuario. Para que el usuario haga valer su garantía, Hewlett Packard Enterprise pone como condición que un proveedor de servicios autorizado realice la sustitución de estos componentes. Dichos componentes se identifican con la palabra "No" en el catálogo ilustrado de componentes.

[1]Verplicht—Onderdelen die de klant zelf moet vervangen. Als u Hewlett Packard Enterprise vraagt deze onderdelen te vervangen, worden er reis- en arbeidskosten voor deze service in rekening gebracht.
[2]Optioneel—Onderdelen die de klant zelf kan vervangen. Deze onderdelen zijn ook ontworpen om door de klant zelf te worden vervangen. Als u Hewlett Packard Enterprise verzoekt om deze te vervangen, kan het zijn dat hiervoor extra kosten in rekening worden gebracht, afhankelijk van het soort garantie dat op uw product van toepassing is.
[3]Geen—Sommige onderdelen van Hewlett Packard Enterprise zijn niet ontworpen om door de klant zelf te worden vervangen. Om te voldoen aan de garantievoorwaarden eist Hewlett Packard Enterprise dat een geautoriseerde serviceverlener het onderdeel vervangt. Deze onderdelen worden aangeduid met 'Geen' in de geïllustreerde onderdelencatalogus.

[1]Obrigatório—Peças cujo reparo feito pelo cliente é obrigatório. Se desejar que a Hewlett Packard Enterprise substitua essas peças, serão cobradas as despesas de transporte e mão-de-obra do serviço.
[2]Opcional—Peças cujo reparo feito pelo cliente é opcional. Essas peças também são projetadas para o reparo feito pelo cliente. No entanto, se desejar que a Hewlett Packard Enterprise as substitua, pode haver ou não a cobrança de taxa adicional, dependendo do tipo de serviço de garantia destinado ao produto.
[3]Não—Algumas peças da Hewlett Packard Enterprise não são projetadas para o reparo feito pelo cliente. A fim de cumprir a garantia do cliente, a Hewlett Packard Enterprise exige que um técnico autorizado substitua a peça. Essas peças estão identificadas com a marca "No" (Não), no catálogo de peças ilustrado.

[1]Mandatory：必須 — カスタマーセルフリペアが必須の部品。当該部品について、もしもお客様がHewlett Packard Enterpriseに交換作業を依頼される場合には、その修理サービスに関する交通費および人件費がお客様に請求されます。
[2]Optional：任意 — カスタマーセルフリペアが任意である部品。この部品もカスタマーセルフリペア用です。当該部品について、もしもお客様がHewlett Packard Enterpriseに交換作業を依頼される場合には、お買い上げの製品に適用される保証サービス内容の範囲内においては、別途費用を負担していただくことなく保証サービスを受けることができます。
[3]No：除外 — Hewlett Packard Enterprise製品の一部の部品は、カスタマーセルフリペアの対象外です。製品の保証を継続するためには、Hewlett Packard EnterpriseまたはHewlett Packard Enterprise正規保守代理店による交換作業が必須となります。部品カタログには、当該部品がカスタマーセルフリペア除外品である旨が記載されています。

[1]Mandatory — 客户必须自行维修的部件。如果您请求 Hewlett Packard Enterprise 更换这些部件，则必须为该服务支付差旅费和人工费用。
[2]Optional — 客户可以选择是否自行维修的部件。这些部件也是为客户自行维修设计的。不过，如果您要求 Hewlett Packard Enterprise 为您更换这些部件，则根据为您的产品指定的保修服务类型，Hewlett Packard Enterprise 可能收取或不再收取任何附加费用。
[3]No — 某些 Hewlett Packard Enterprise 部件的设计并未考虑客户自行维修。为了满足客户保修的需要，Hewlett Packard Enterprise 要求授权服务提供商更换相关部件。这些部件在部件图解目录中标记为“否”。

[1]Mandatory — 客戶自行維修所使用的零件是強制性的。如果您要求 Hewlett Packard Enterprise 更換這些零件，Hewlett Packard Enterprise 將會向您收取此服務所需的外出費用與勞動成本。
[2]Optional — 客戶自行維修所使用的零件是選購的。這些零件也設計用於客戶自行維修之用。不過，如果您要求 Hewlett Packard Enterprise 為您更換，則可能需要也可能不需要負擔額外的費用，端視針對此產品指定的保固服務類型而定。
[3]No — 某些 Hewlett Packard Enterprise 零件沒有消費者可自行維修的設計。為符合客戶保固，Hewlett Packard Enterprise 需要授權的服務供應商更換零件。這些零件在圖示的零件目錄中，被標示為「否」。

[1]Mandatory — 고객 셀프 수리가 의무 사항인 필수 부품. 사용자가 Hewlett Packard Enterprise에 이 부품의 교체를 요청할 경우 해당 서비스에 대한 출장비 및 작업비가 청구됩니다.
[2]Optional — 고객 셀프 수리가 선택 사항인 부품. 이러한 부품들도 고객 셀프 수리가 가능하도록 설계되었습니다. 하지만 사용자가 Hewlett Packard Enterprise에 이러한 부품의 교체를 요청할 경우 사용자가 구입한 제품에 해당하는 보증 서비스 유형에 따라 추가 비용 없이 교체가 가능할 수 있습니다.
[3]No — 일부 Hewlett Packard Enterprise 부품은 고객 셀프 수리가 불가능하도록 설계되었습니다. Hewlett Packard Enterprise는 만족스러운 고객 보증을 위해 공인 서비스 제공업체를 통해 부품을 교체하도록 요구하고 있습니다. 이러한 부품들은 Illustrated Parts Catalog에 “No”라고 표시되어 있습니다.

Removal and replacement procedures

Required tools

You need the following items for some procedures:

- T-25 Torx screwdriver (to loosen the shipping screws located inside the server quick-release latch rack ears)
- T-10/T-15 Torx screwdriver
- Flathead screwdriver (for replacing the system battery)
- HPE Insight Diagnostics (on page 90)

Safety considerations

Before performing service procedures, review all the safety information.

Preventing electrostatic discharge

To prevent damaging the system, be aware of the precautions you need to follow when setting up the system or handling parts. A discharge of static electricity from a finger or other conductor may damage system boards or other static-sensitive devices. This type of damage may reduce the life expectancy of the device.

To prevent electrostatic damage:

- Avoid hand contact by transporting and storing products in static-safe containers.
- Keep electrostatic-sensitive parts in their containers until they arrive at static-free workstations.
- Place parts on a grounded surface before removing them from their containers.
- Avoid touching pins, leads, or circuitry.
- Always be properly grounded when touching a static-sensitive component or assembly.

Symbols on equipment

The following symbols may be placed on equipment to indicate the presence of potentially hazardous conditions.

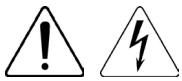

This symbol indicates the presence of hazardous energy circuits or electric shock hazards. Refer all servicing to qualified personnel.
WARNING: To reduce the risk of injury from electric shock hazards, do not open this enclosure. Refer all maintenance, upgrades, and servicing to qualified personnel.

This symbol indicates the presence of electric shock hazards. The area contains no user or field serviceable parts. Do not open for any reason.
WARNING: To reduce the risk of injury from electric shock hazards, do not open this enclosure.

This symbol on an RJ-45 receptacle indicates a network interface connection.
WARNING: To reduce the risk of electric shock, fire, or damage to the equipment, do not plug telephone or telecommunications connectors into this receptacle.

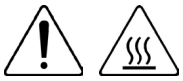

This symbol indicates the presence of a hot surface or hot component. If this surface is contacted, the potential for injury exists.
WARNING: To reduce the risk of injury from a hot component, allow the surface to cool before touching.

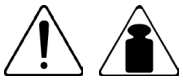

This symbol indicates that the component exceeds the recommended weight for one individual to handle safely.
WARNING: To reduce the risk of personal injury or damage to the equipment, observe local occupational health and safety requirements and guidelines for manual material handling.

These symbols, on power supplies or systems, indicate that the equipment is supplied by multiple sources of power.
WARNING: To reduce the risk of injury from electric shock, remove all power cords to completely disconnect power from the system.

Server warnings and cautions

WARNING: This server is very heavy. To reduce the risk of personal injury or damage to the equipment:

- Observe local occupational health and safety requirements and guidelines for manual material handling.
- Get help to lift and stabilize the product during installation or removal, especially when the product is not fastened to the rails. Hewlett Packard Enterprise recommends that a minimum of two people are required for all rack server installations. A third person may be required to help align the server if the server is installed higher than chest level.
- Use caution when installing the server in or removing the server from the rack; it is unstable when not fastened to the rails.

WARNING: To reduce the risk of personal injury from hot surfaces, allow the drives and the internal system components to cool before touching them.

CAUTION: Protect the server from power fluctuations and temporary interruptions with a regulating uninterruptible power supply. This device protects the hardware from damage caused by power surges and voltage spikes and keeps the system in operation during a power failure.

CAUTION: Protect the server from power fluctuations and temporary interruptions with a regulating uninterruptible power supply. This device protects the hardware from damage caused by power surges and voltage spikes and keeps the system in operation during a power failure.

CAUTION: Do not operate the server for long periods with the access panel open or removed. Operating the server in this manner results in improper airflow and improper cooling that can lead to thermal damage.

Rack warnings

⚠ **WARNING:** To reduce the risk of personal injury or damage to the equipment, be sure that:

- The leveling jacks are extended to the floor.
- The full weight of the rack rests on the leveling jacks.
- The stabilizing feet are attached to the rack if it is a single-rack installation.
- The racks are coupled together in multiple-rack installations.
- Only one component is extended at a time. A rack may become unstable if more than one component is extended for any reason.

⚠ **WARNING:** To reduce the risk of personal injury or equipment damage when unloading a rack:

- At least two people are needed to safely unload the rack from the pallet. An empty 42U rack can weigh as much as 115 kg (253 lb), can stand more than 2.1 m (7 ft) tall, and might become unstable when being moved on its casters.
- Never stand in front of the rack when it is rolling down the ramp from the pallet. Always handle the rack from both sides.

⚠ **WARNING:** To reduce the risk of personal injury or damage to the equipment, adequately stabilize the rack before extending a component outside the rack. Extend only one component at a time. A rack may become unstable if more than one component is extended.

⚠ **WARNING:** When installing a server in a telco rack, be sure that the rack frame is adequately secured at the top and bottom to the building structure.

Preparation procedures

To access some components and perform certain service procedures, you must perform one or more of the following procedures:

- Access the product front panel ("Remove the security bezel (optional)" on page 27).
- Power down the server (on page 27).

  If you must remove a server from a rack or a non-hot-plug component from a server, power down the server.
- Extend the server from the rack (on page 27).

  If you are performing service procedures in a Hewlett Packard Enterprise, Compaq branded, Telco, or third-party rack cabinet, you can use the locking feature of the rack rails to support the server and gain access to internal components.

  For more information about Telco rack solutions, see the RackSolutions website (http://www.racksolutions.com/hp-dl180-g9-rails.html).
- Access the product rear panel (on page 30).
- Remove the server from the rack (on page 30).

  If the rack environment, cabling configuration, or the server location in the rack creates awkward conditions, remove the server from the rack.
- Remove the PCI riser cages (on page 31).
- Remove the air baffle (on page 32).
- Remove the fan cage (on page 33).

Remove the security bezel (optional)

To access the front panel components, unlock and then remove the security bezel. The security bezel is only supported in servers that are using the quick-release latch rack ears.

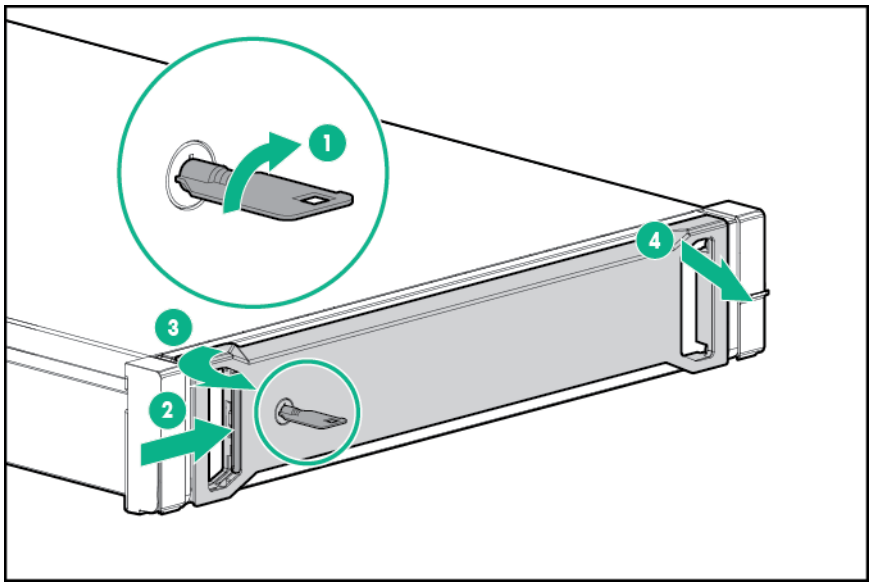

Power down the server

Before powering down the server for any upgrade or maintenance procedures, perform a backup of critical server data and programs.

IMPORTANT: When the server is in standby mode, auxiliary power is still being provided to the system.

To power down the server, use one of the following methods:

- Press and release the Power On/Standby button.

  This method initiates a controlled shutdown of applications and the OS before the server enters standby mode.

- Press and hold the Power On/Standby button for more than 4 seconds to force the server to enter standby mode.

  This method forces the server to enter standby mode without properly exiting applications and the OS. If an application stops responding, you can use this method to force a shutdown.

- Use a virtual power button selection through iLO 4.

  This method initiates a controlled remote shutdown of applications and the OS before the server enters standby mode.

Before proceeding, verify the server is in standby mode by observing that the system power LED is amber.

Extend the server from the rack

WARNING: To reduce the risk of personal injury or equipment damage, be sure that the rack is adequately stabilized before extending a component from the rack.

1. If the rear panel cables are not secured by a cable management arm, do the following:
   a. Power down the server (on page 27).

b. Disconnect all peripheral cables from the server.

c. Disconnect each power cord from the server.

2. In a server that uses thumbscrew rack ears, loosen the captive thumbscrews that secure the server faceplate to the front of the rack, and then slide the server out of the rack.

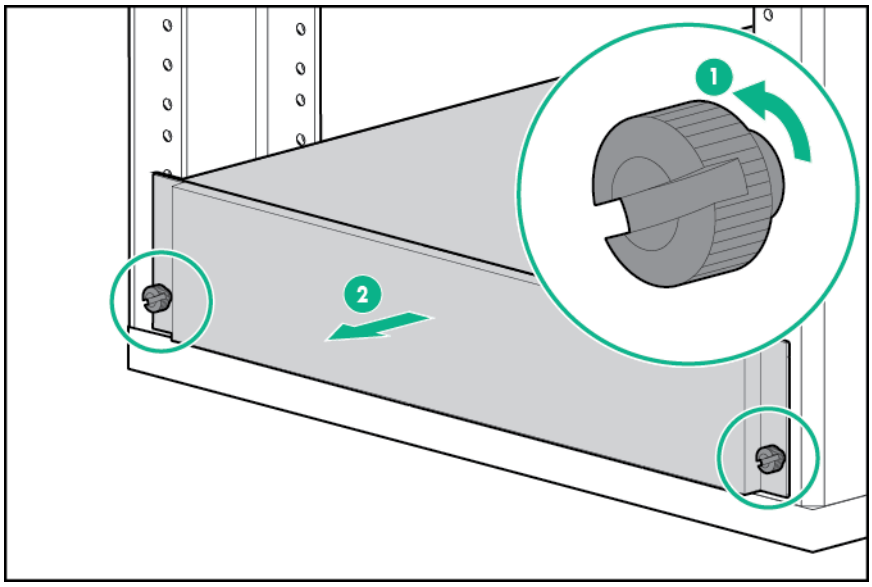

3. In a server that uses quick-release latch rack ears:

a. Open the latches on both sides of the server.

b. If necessary, use a T-25 Torx screwdriver to loosen the shipping screws.

c. Slide the server out of the rack.

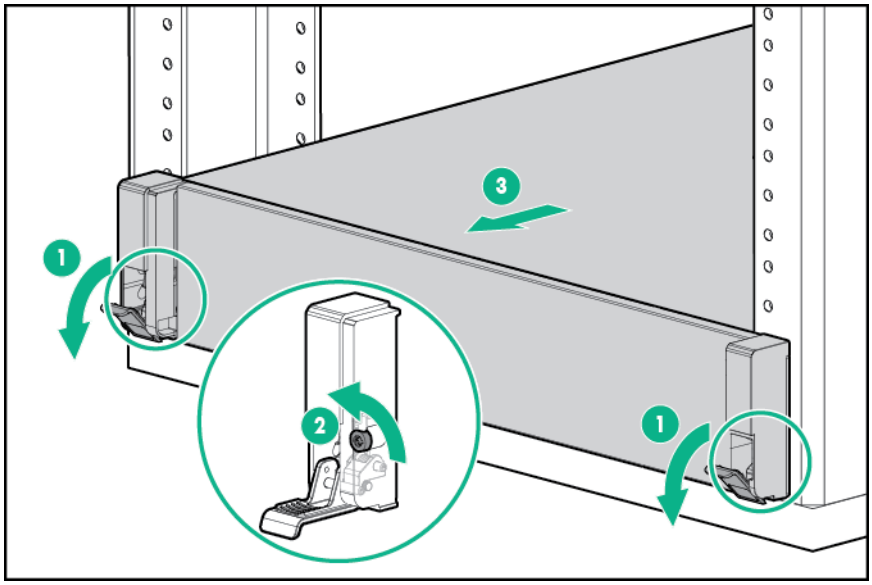

4. After performing the installation or maintenance procedure, slide the server back into the rack, and then press the server firmly into the rack to secure it in place.

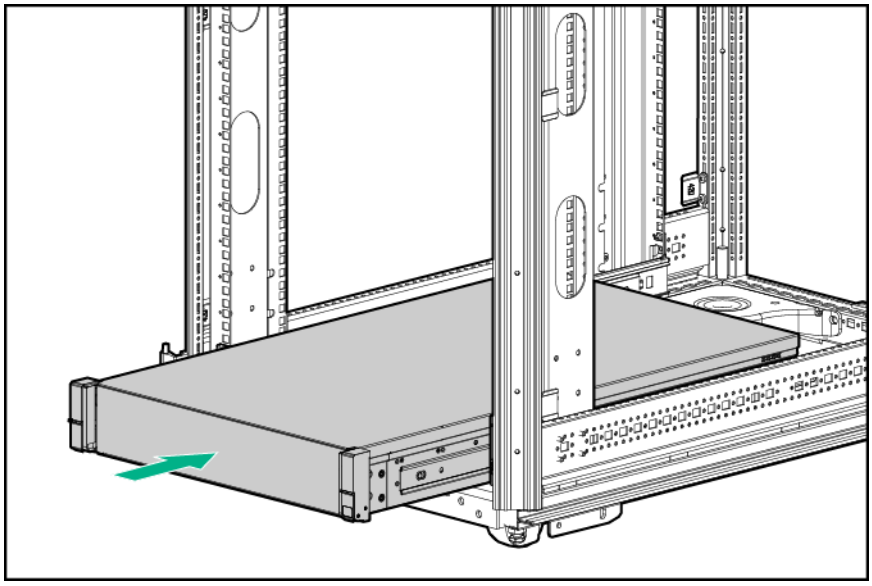

5. Do one of the following:
   - In a server that uses thumbscrew rack ears, tighten the captive thumbscrews.
   - In a server that uses quick-release latch rack ears, if necessary, tighten the shipping screws.
6. If the rear panel cables were disconnected because a cable management arm is not in use, do the following:
   a. Connect each power cord to the server.
   b. Connect all peripheral cables to the server.
   c. Power up the server.

Access the product rear panel

Opening the cable management arm

To access the server rear panel:

1. Release the cable management arm.

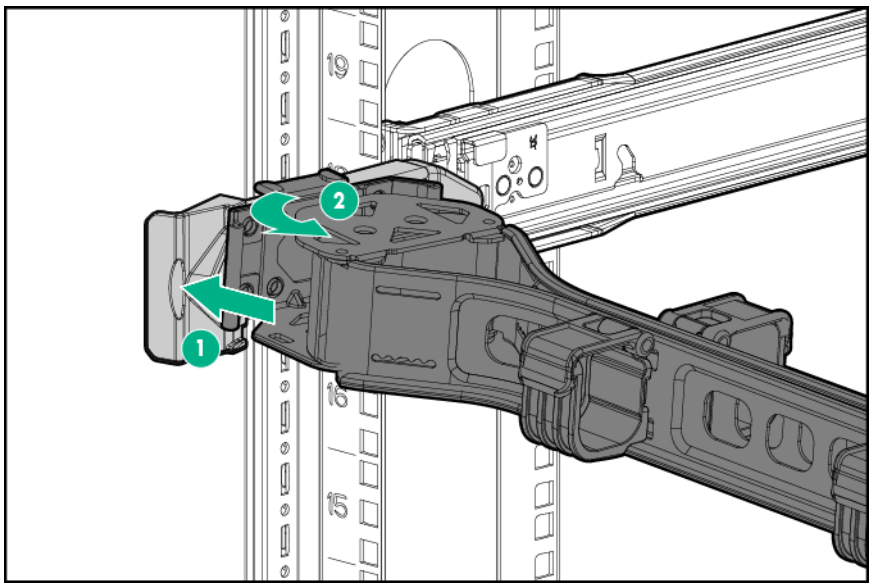

2. Open the cable management arm. The cable management arm can be right-mounted or left-mounted.

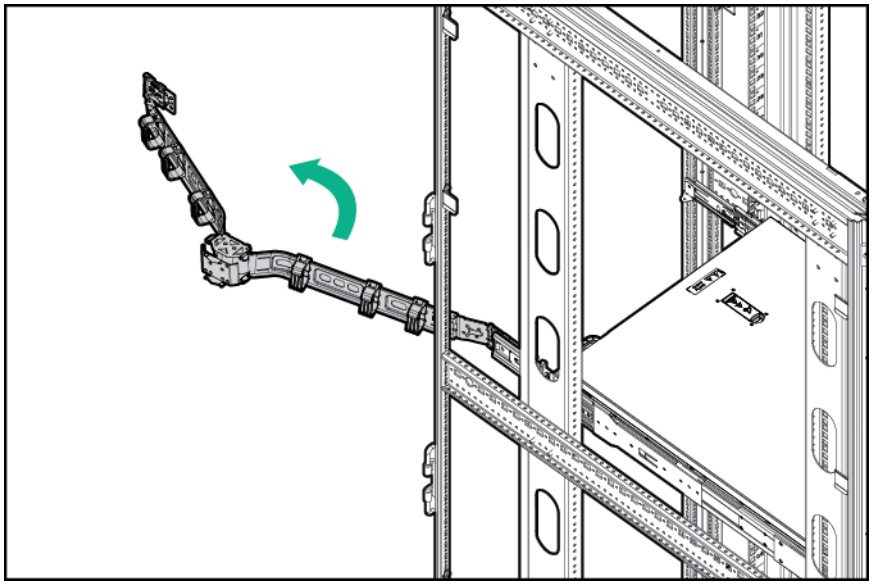

Remove the server from the rack

⚠ **WARNING:** This server is very heavy. To reduce the risk of personal injury or damage to the equipment:

- Observe local occupational health and safety requirements and guidelines for manual material handling.
- Get help to lift and stabilize the product during installation or removal, especially when the product is not fastened to the rails. Hewlett Packard Enterprise recommends that a minimum of two people are required for all rack server installations. A third person may be required to help align the server if the server is installed higher than chest level.
- Use caution when installing the server in or removing the server from the rack; it is unstable when not fastened to the rails.

To remove the server from a Hewlett Packard Enterprise, Compaq-branded, Telco, or a third-party rack:

1. Power down the server (on page 27).
2. Extend the server on the rack rails until the server rail-release latches engage.
3. Disconnect all peripheral cables from the server.
4. Disconnect each power cord from the server.
5. Remove the server from the rack.

   For instructions on how to extend or remove the server from the rack, see the documentation that ships with the rack rail system.
6. Place the server on a sturdy, level surface.

Remove the PCI riser cages

⚠ **WARNING:** To reduce the risk of personal injury from hot surfaces, allow the drives and the internal system components to cool before touching them.

△ **CAUTION:** To prevent damage to the server or expansion boards, power down the server, and disconnect all power cords before removing or installing the PCI riser cage.

To remove the component:

1. Power down the server (on page 27).
2. Remove all power:
   a. Disconnect each power cord from the power source.
   b. Disconnect each power cord from the server.
3. Do one of the following:
   - Extend the server from the rack (on page 27).
   - Remove the server from the rack (on page 30).
4. Remove the access panel ("Access panel" on page 37).
5. If the server was just extended from the rack and expansion boards with external cabling are installed on the PCI riser cage, disconnect all cables from the expansion boards to completely remove the cage from the server.
6. Lift the release tab, and then rotate it 180° counterclockwise.
7. Grasp the PCI riser cage at the touch points and lift it out of the chassis.

- Primary PCI riser cage

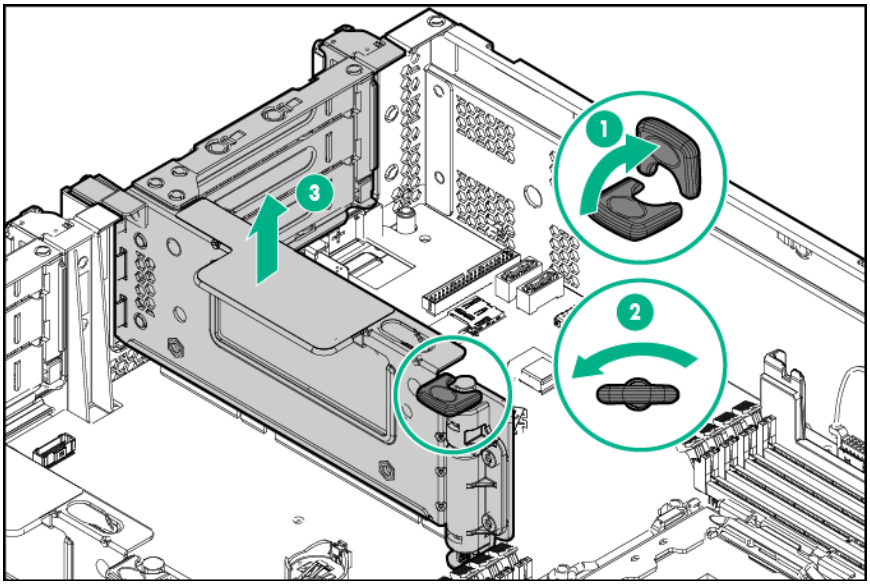

- Secondary PCI riser cage

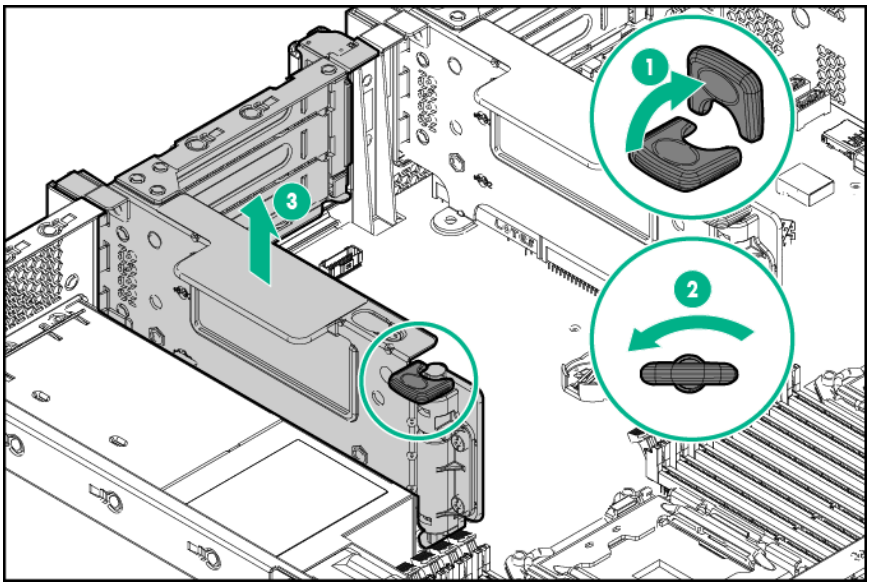

8. If expansion boards with internal cabling are installed on the PCI riser cage, disconnect all internal cables from the expansion boards to completely remove the cage from the server.

Remove the air baffle

△ **CAUTION:** For proper cooling, do not operate the server without the access panel, baffles, expansion slot covers, or blanks installed. If the server supports hot-plug components, minimize the amount of time the access panel is open.

To remove the component:

1. Power down the server (on page 27).
2. Remove all power:
   a. Disconnect each power cord from the power source.
   b. Disconnect each power cord from the server.

3. Do one of the following:
   - Extend the server from the rack (on page 27).
   - Remove the server from the rack (on page 30).
4. Remove the access panel ("Access panel" on page 37).
5. If a full-length expansion board is installed on a PCI riser cage, remove the riser cage ("Remove the PCI riser cages" on page 31).
6. Remove the air baffle.

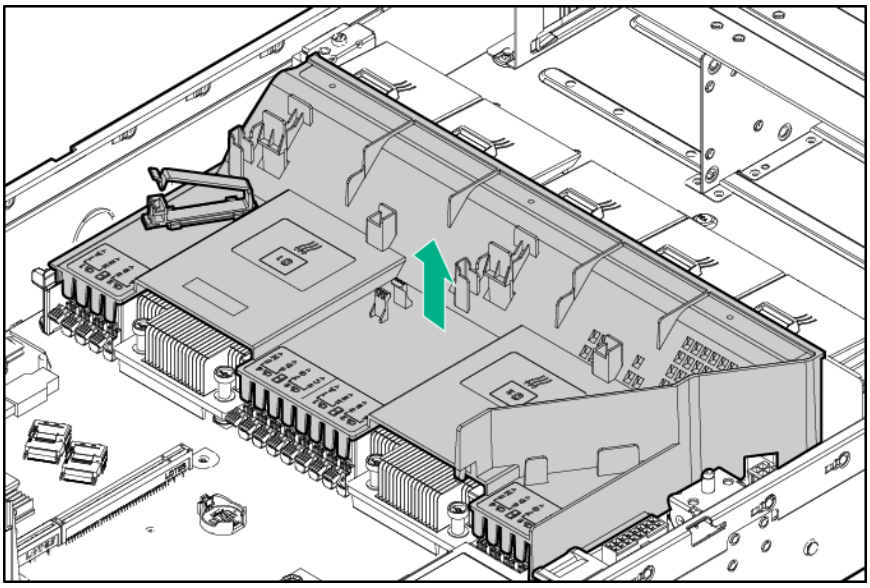

Remove the fan cage

To remove the component:

1. Power down the server (on page 27).
2. Remove all power:
   a. Disconnect each power cord from the power source.
   b. Disconnect each power cord from the server.
3. Do one of the following:
   - Extend the server from the rack (on page 27).
   - Remove the server from the rack (on page 30).
4. Remove the access panel ("Access panel" on page 37).
5. Remove the air baffle (on page 32).
6. Disconnect the fan cables.

7. Remove the fan cage.

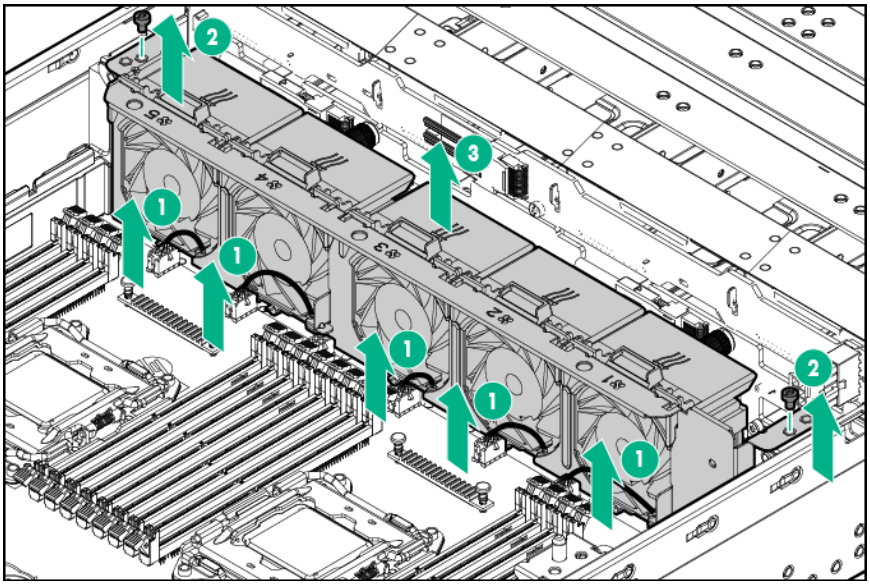

Non-hot-plug drive carrier

CAUTION: To prevent improper cooling and thermal damage, do not operate the server unless all bays are populated with either a component or a blank.

To remove the component:

1. Power down the server (on page 27).
2. Remove all power:
   a. Disconnect each power cord from the power source.
   b. Disconnect each power cord from the server.
3. If installed, remove the security bezel ("Remove the security bezel (optional)" on page 27).
4. Remove the drive carrier.

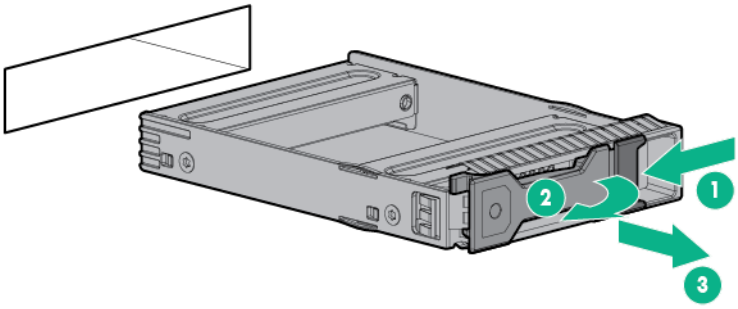

To replace the component, slide the component into the bay until it clicks.

Non-hot-plug drive

CAUTION: To prevent improper cooling and thermal damage, do not operate the server unless all bays are populated with either a component or a blank.

To remove the component:

1. Back up all server data on the drive.
2. Power down the server (on page 27).
3. Remove all power:
   a. Disconnect each power cord from the power source.
   b. Disconnect each power cord from the server.
4. If installed, remove the security bezel ("Remove the security bezel (optional)" on page 27).
5. Remove the non-hot-plug drive.

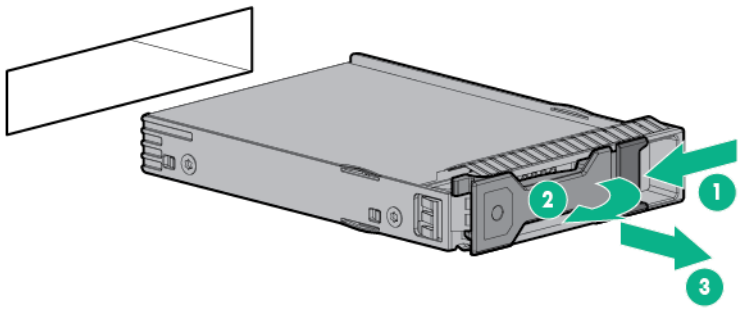

6. Remove the drive from the carrier.

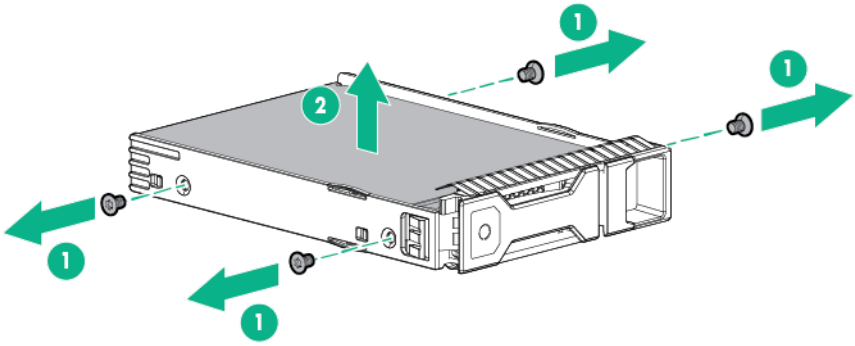

To replace the component, reverse the removal procedure.

Hot-plug drive blanks

CAUTION: To prevent improper cooling and thermal damage, do not operate the server unless all bays are populated with either a component or a blank.

To remove the component:

1. If installed, remove the security bezel ("Remove the security bezel (optional)" on page 27).
2. Remove the drive blank.

- Hot-plug LFF drive blank

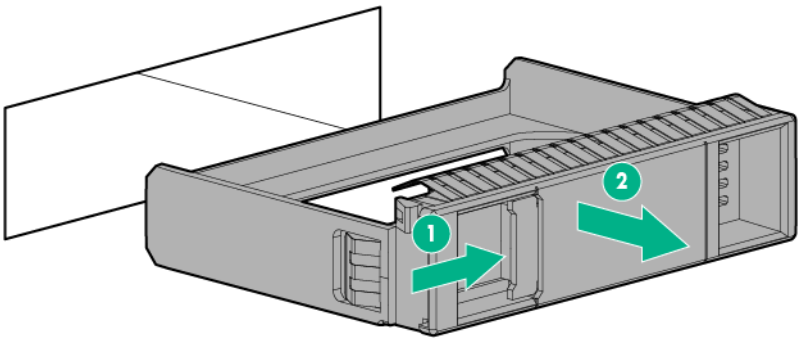

To replace the LFF drive blank, slide the component into the bay until it clicks.

- Hot-plug SFF drive blank

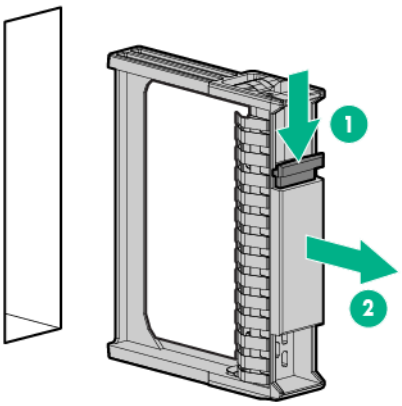

To replace the SFF drive blank, while pressing the release latch, slide the component into the bay until it is fully seated.

Hot-plug drive

CAUTION: To prevent improper cooling and thermal damage, do not operate the server unless all bays are populated with either a component or a blank.

To remove the component:

1. Back up all server data on the drive.
2. If installed, remove the security bezel ("Remove the security bezel (optional)" on page 27).
3. Determine the status of the drive from the drive LED definitions ("HPE SmartDrive LED definitions" on page 103).
4. Remove the hot-plug drive.

- Hot-plug LFF drive

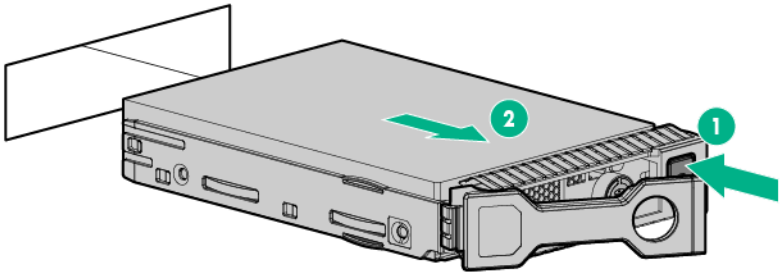

- Hot-plug SFF drive

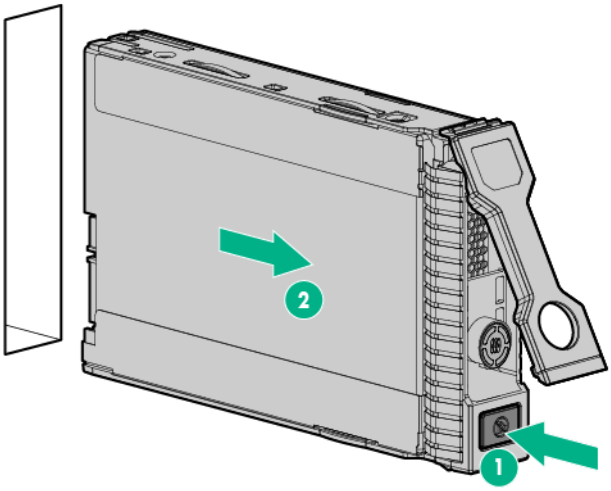

To replace the component, reverse the removal procedure.

Access panel

WARNING: To reduce the risk of personal injury from hot surfaces, allow the drives and the internal system components to cool before touching them.

CAUTION: To prevent damage to electrical components, take the appropriate anti-static precautions before beginning any installation, removal, or replacement procedure. Improper grounding can cause electrostatic discharge.

CAUTION: Do not operate the server for long periods with the access panel open or removed. Operating the server in this manner results in improper airflow and improper cooling that can lead to thermal damage.

To remove the component:

1. Power down the server (on page 27).
2. If you are performing a non-hot-plug procedure, remove all power:
   a. Disconnect each power cord from the power source.
   b. Disconnect each power cord from the server.
3. Do one of the following:
   - Extend the server from the rack (on page 27).

- Remove the server from the rack (on page 30).

4. If the locking latch is locked, use a T-15 Torx screwdriver to unlock the latch.
5. Open the locking latch.

   The access panel slides back, releasing it from the chassis.
6. Lift and remove the access panel.

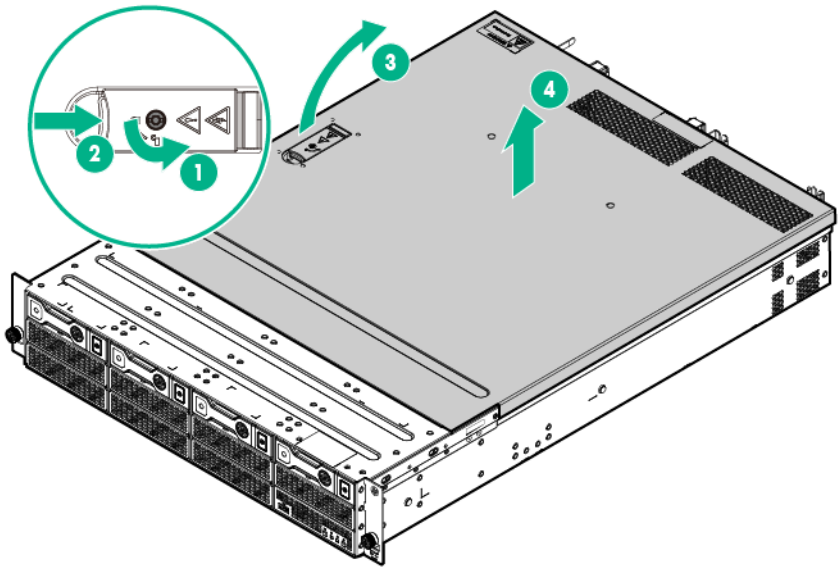

To replace the component, reverse the removal procedure.

4-bay and 8-bay LFF non-hot-plug drive cable assemblies

WARNING: To reduce the risk of personal injury from hot surfaces, allow the drives and the internal system components to cool before touching them.

CAUTION: To prevent damage to electrical components, take the appropriate anti-static precautions before beginning any installation, removal, or replacement procedure. Improper grounding can cause electrostatic discharge.

To remove the component:

1. Power down the server (on page 27).
2. Remove all power:
   a. Disconnect each power cord from the power source.
   b. Disconnect each power cord from the server.
3. If installed, remove the security bezel ("Remove the security bezel (optional)" on page 27).
4. Remove all drives ("Non-hot-plug drive" on page 34) and drive carriers ("Non-hot-plug drive carrier" on page 34).
5. Do one of the following:
   - Extend the server from the rack (on page 27).
   - Remove the server from the rack (on page 30).
6. Remove the access panel ("Access panel" on page 37).

7. If an expansion board is installed in the primary PCI riser cage, then remove the PCI riser cage ("Remove the PCI riser cages" on page 31).
8. Remove the air baffle (on page 32).
9. Remove the fan cage (on page 33).
10. Prepare the non-hot-plug drive cable assembly for removal:
    a. Disconnect the Mini-SAS and drive power cables from the system board.
    b. Release the Mini-SAS and drive power cables from the front chassis cable clips.

— 4-bay LFF non-hot-plug drive cable disconnections

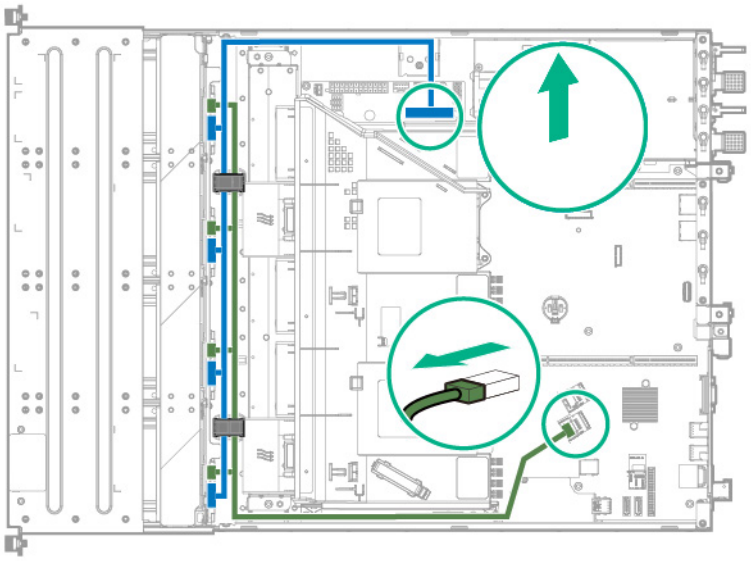

— 8-bay LFF non-hot-plug drive cable disconnections

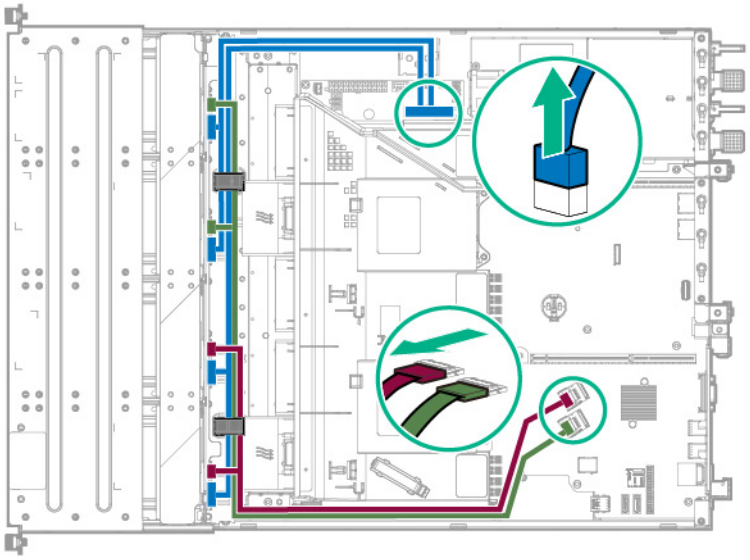

11. Remove the non-hot-plug drive cable assembly.

- 4-bay LFF non-hot-plug drive cable assembly removal

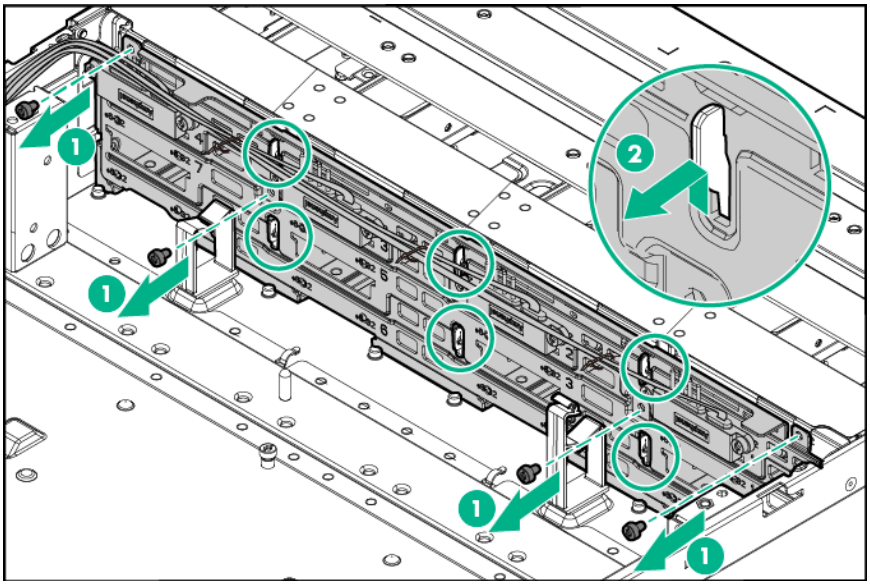

- 8-bay LFF non-hot-plug drive cable assembly removal

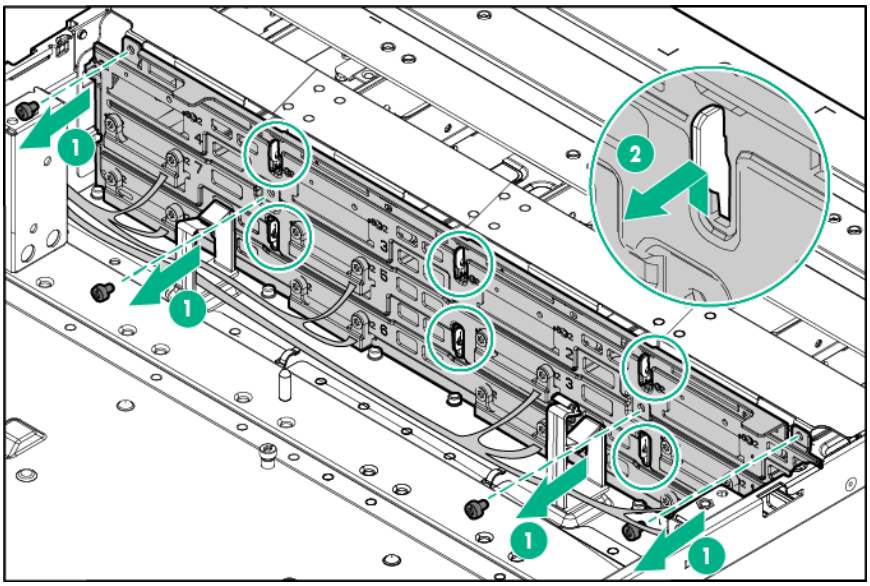

To replace the component, reverse the removal procedure.

4-bay and 8-bay LFF hot-plug drive backplanes

This procedure shows the removal of the 4-bay and 8-bay LFF drive backplanes from a 12-bay LFF hot-plug drive configuration.

WARNING: To reduce the risk of personal injury from hot surfaces, allow the drives and the internal system components to cool before touching them.

CAUTION: To prevent damage to electrical components, take the appropriate anti-static precautions before beginning any installation, removal, or replacement procedure. Improper grounding can cause electrostatic discharge.

To remove the component:

1. Power down the server (on page 27).
2. Remove all power:
   a. Disconnect each power cord from the power source.
   b. Disconnect each power cord from the server.
3. If installed, remove the security bezel ("Remove the security bezel (optional)" on page 27).
4. Remove all drives ("Hot-plug drive" on page 36).
5. Do one of the following:
   - Extend the server from the rack (on page 27).
   - Remove the server from the rack (on page 30).
6. Remove the access panel ("Access panel" on page 37).
7. Remove the air baffle (on page 32).
8. Remove the fan cage (on page 33).
9. Disconnect all cables from the drive backplane.
10. Remove the drive backplane.
    - 4-bay LFF hot-plug drive backplane removal

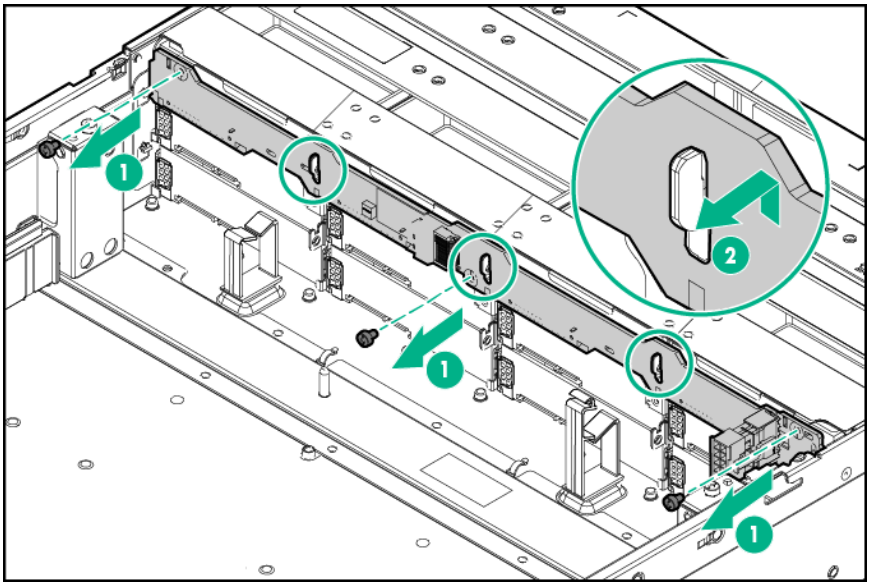

- 8-bay LFF hot-plug drive backplane removal

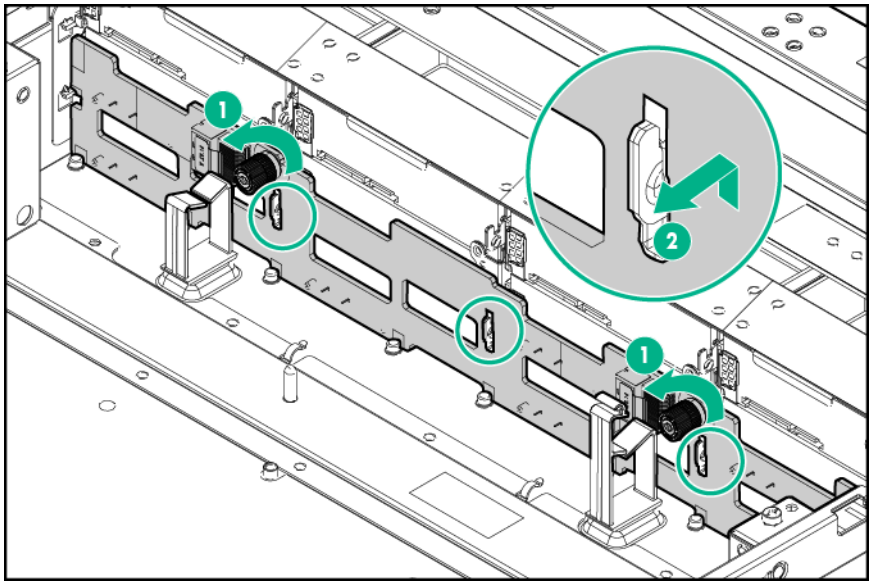

To replace the component, reverse the removal procedure.

8-bay SFF hot-plug drive backplane

WARNING: To reduce the risk of personal injury from hot surfaces, allow the drives and the internal system components to cool before touching them.

CAUTION: To prevent damage to electrical components, take the appropriate anti-static precautions before beginning any installation, removal, or replacement procedure. Improper grounding can cause electrostatic discharge.

To remove the component:

1. Power down the server (on page 27).
2. Remove all power:
   a. Disconnect each power cord from the power source.
   b. Disconnect each power cord from the server.
3. If installed, remove the security bezel ("Remove the security bezel (optional)" on page 27).
4. Remove all drives ("Hot-plug drive" on page 36).
5. Do one of the following:
   - Extend the server from the rack (on page 27).
   - Remove the server from the rack (on page 30).
6. Remove the access panel ("Access panel" on page 37).
7. Disconnect all cables from the drive backplane.

8. Remove the drive backplane.

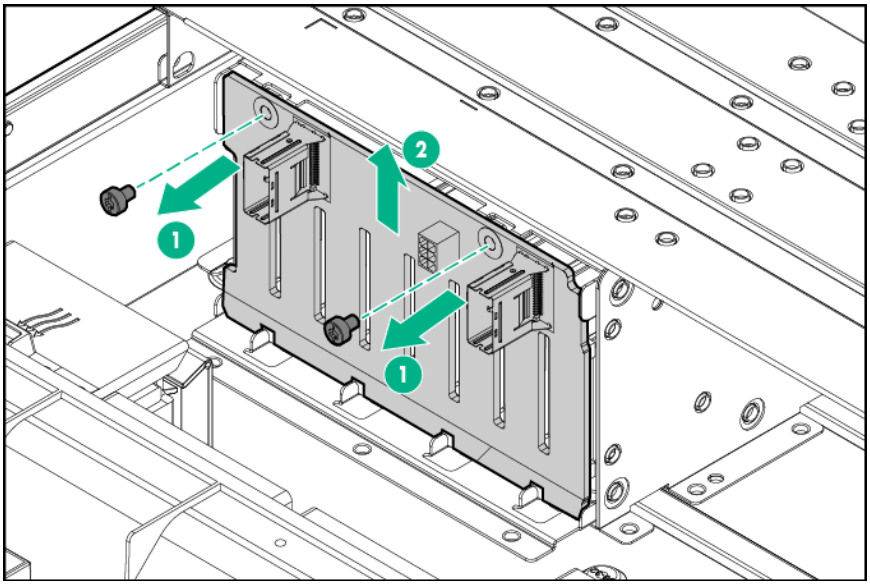

To replace the component, reverse the removal procedure.

HPE Smart Storage Battery

WARNING: To reduce the risk of personal injury from hot surfaces, allow the drives and the internal system components to cool before touching them.

CAUTION: To prevent damage to electrical components, take the appropriate anti-static precautions before beginning any installation, removal, or replacement procedure. Improper grounding can cause electrostatic discharge.

To remove the component:

1. Power down the server (on page 27).
2. Remove all power:
   a. Disconnect each power cord from the power source.
   b. Disconnect each power cord from the server.
3. Do one of the following:
   - Extend the server from the rack (on page 27).
   - Remove the server from the rack (on page 30).
4. Remove the access panel ("Access panel" on page 37).

5. Slightly pull up the battery holder from the chassis to access the battery cable connection underneath it, and then disconnect the HPE Smart Storage Battery cable.

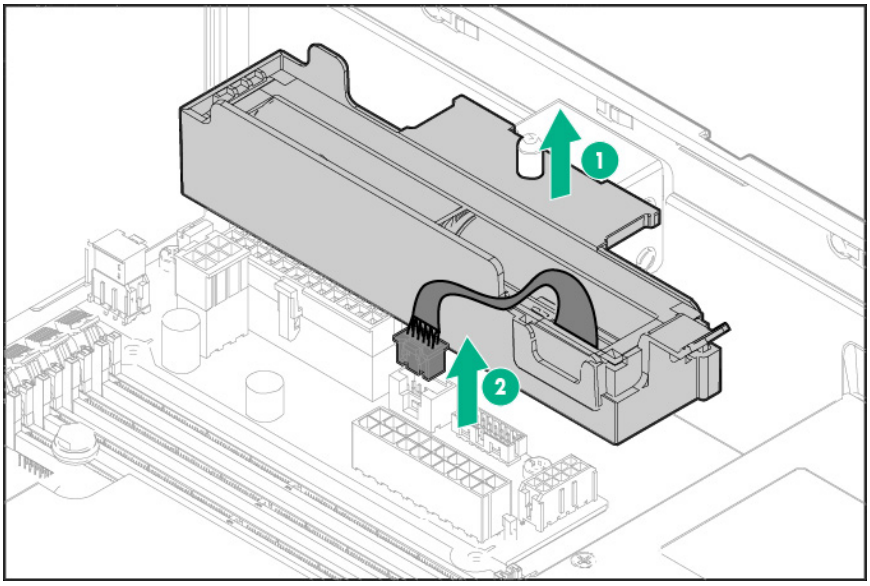

6. Remove the Smart Storage Battery from its holder.

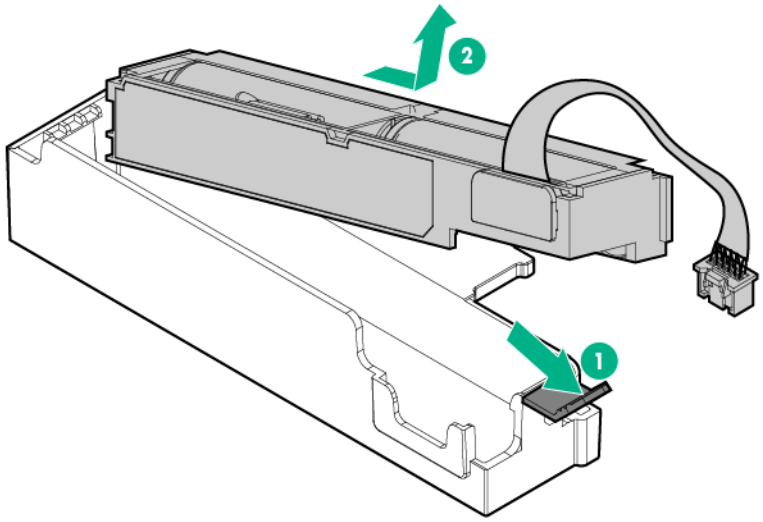

To replace the component, reverse the removal procedure.

FBWC module

WARNING: To reduce the risk of personal injury from hot surfaces, allow the drives and the internal system components to cool before touching them.

CAUTION: In systems that use external data storage, be sure that the server is the first unit to be powered down and the last to be powered back up. Taking this precaution ensures that the system does not erroneously mark the drives as failed when the server is powered up.

CAUTION: To prevent damage to electrical components, take the appropriate anti-static precautions before beginning any installation, removal, or replacement procedure. Improper grounding can cause electrostatic discharge.

To remove the component:

1. Power down the server (on page 27).
2. Remove all power:
   a. Disconnect each power cord from the power source.
   b. Disconnect each power cord from the server.
3. Do one of the following:
   - Extend the server from the rack (on page 27).
   - Remove the server from the rack (on page 30).
4. Remove the access panel ("Access panel" on page 37).

> **CAUTION:** When connecting or disconnecting the cache module cable, the connectors on the cache module and cable are susceptible to damage. Avoid excessive force and use caution to avoid damage to these connectors.

5. If necessary for easier access to the cache module connector and/or removal of an air scoop, remove the storage controller from the PCI riser cage or from the system board ("Expansion board" on page 59).
6. If the cache module is covered by an air scoop, remove the air scoop.
7. Disconnect the cache module backup power cable from the cache module.

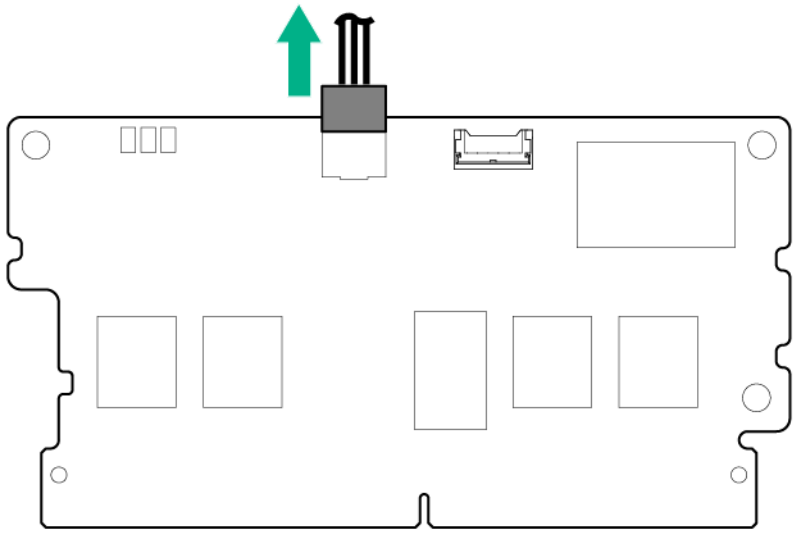

8. Remove the cache module.

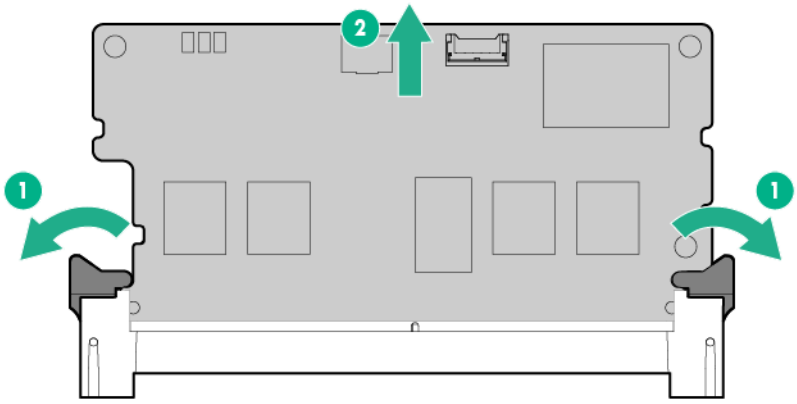

To replace the component, reverse the removal procedure.

M.2 SSD enablement kit

For more information about product features, specifications, options, configurations, and compatibility, see the product QuickSpecs on the Hewlett Packard Enterprise website (http://www.hpe.com/info/qs).

To remove the component:

1. Power down the server (on page 27).
2. Remove all power:
   a. Disconnect each power cord from the power source.
   b. Disconnect each power cord from the server.
3. Do one of the following:
   - Extend the server from the rack (on page 27).
   - Remove the server from the rack (on page 30).
4. Remove the access panel ("Access panel" on page 37).
5. Disconnect the SATA cables from the system board.

- Disconnecting the SATA cables from the system board when the M.2 SSD enablement board is installed in the primary PCI riser cage

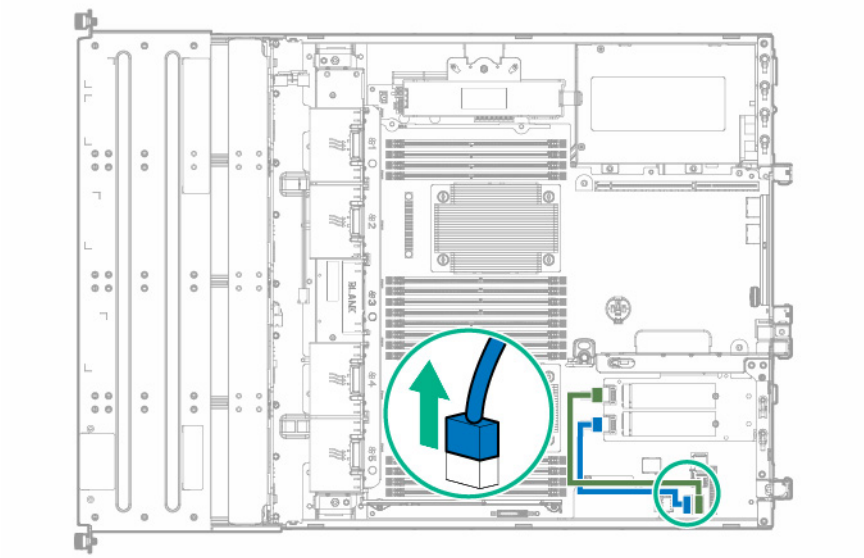

- Disconnecting the SATA cables from the system board when the M.2 SSD enablement board is installed in the secondary PCI riser cage

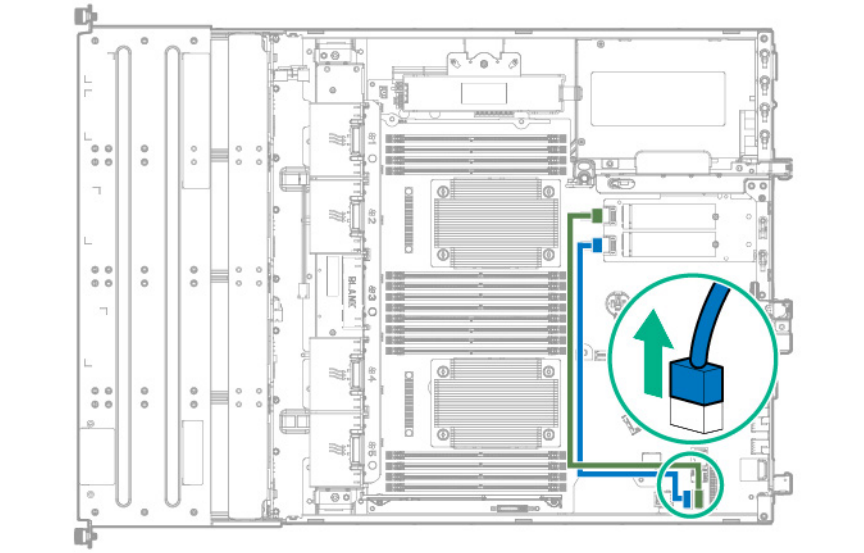

6. Remove the PCI riser cage ("Remove the PCI riser cages" on page 31).

7. Disconnect the SATA cables from the M.2 SSD enablement board.

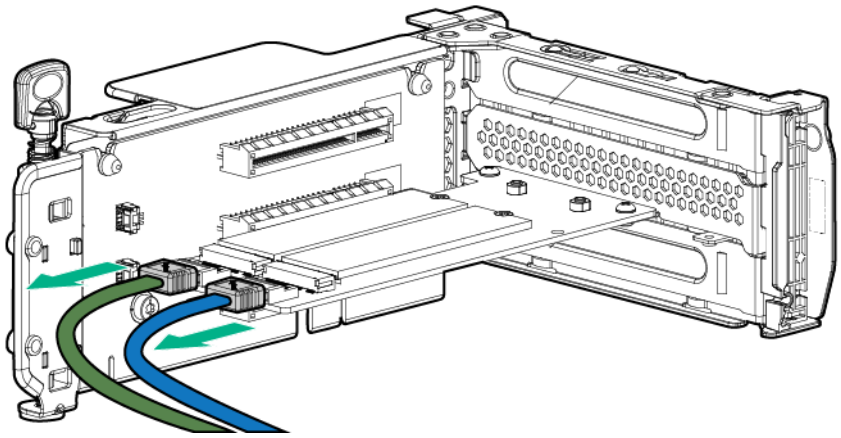

8. Remove the M.2 SSD enablement board.

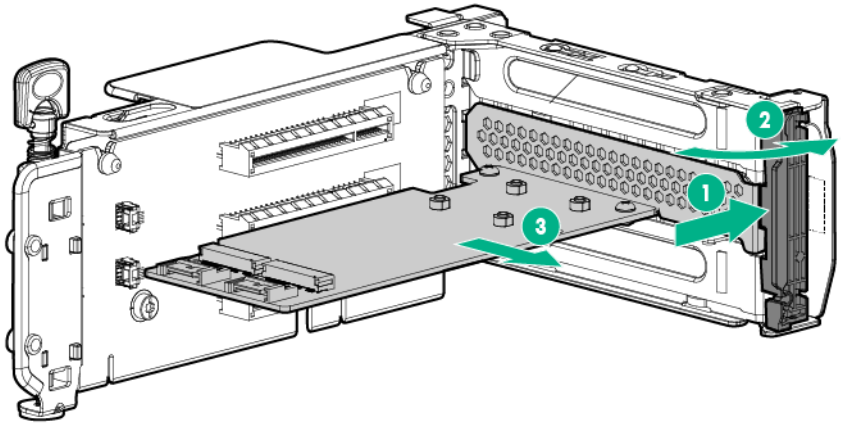

To replace the component, reverse the removal procedure.

Optical drive

WARNING: To reduce the risk of personal injury from hot surfaces, allow the drives and the internal system components to cool before touching them.

CAUTION: To prevent damage to electrical components, take the appropriate anti-static precautions before beginning any installation, removal, or replacement procedure. Improper grounding can cause electrostatic discharge.

CAUTION: To prevent improper cooling and thermal damage, do not operate the chassis unless all bays are populated with a component or a blank.

To remove the component:

1. Power down the server (on page 27).
2. Remove all power:
   a. Disconnect each power cord from the power source.
   b. Disconnect each power cord from the server.
3. Do one of the following:
   - Extend the server from the rack (on page 27).

- Remove the server from the rack (on page 30).

4. If installed, remove the security bezel ("Remove the security bezel (optional)" on page 27).
5. Remove the access panel ("Access panel" on page 37).
6. Disconnect the optical drive cable from the drive.
7. Remove the optical drive.

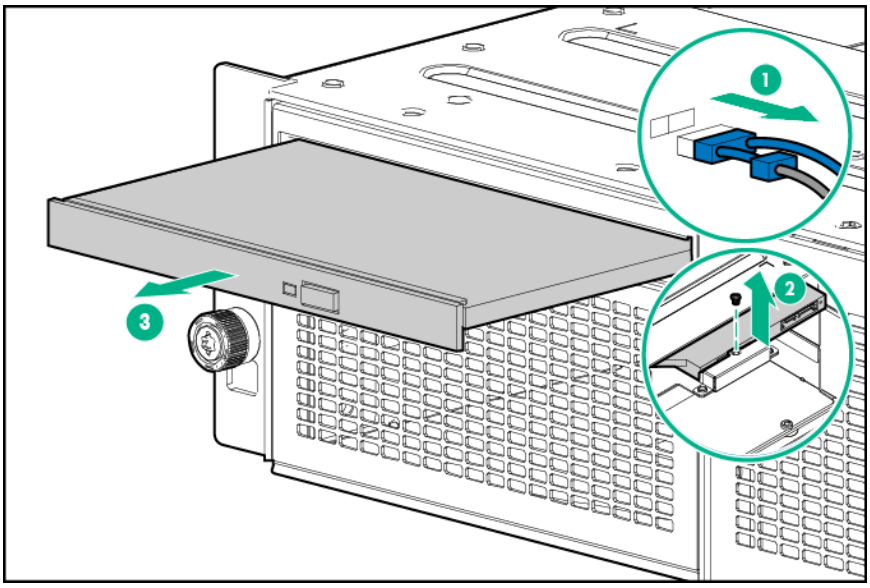

To replace the component, reverse the removal procedure.

Fan and fan blank

Fan population guidelines

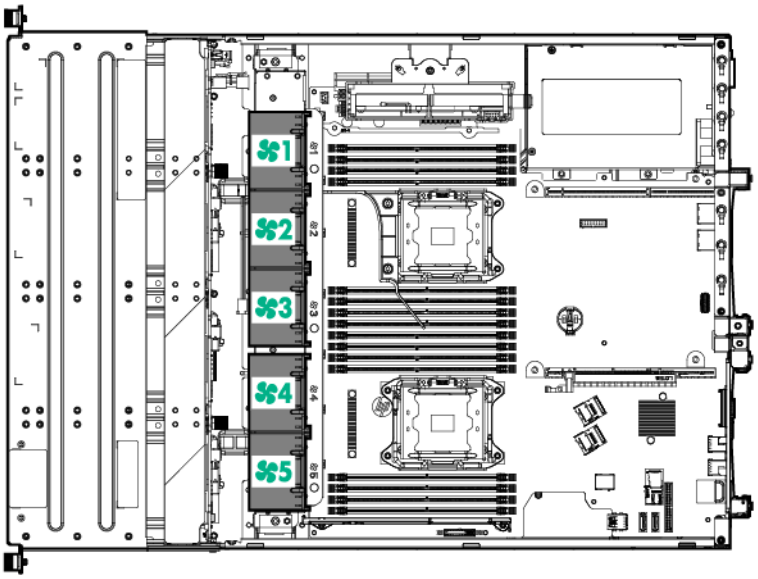

Configuration	Fan bay 1	Fan bay 2	Fan bay 3	Fan bay 4	Fan bay 5
One processor, non-redundant	Blank	Fan	Blank	Blank	Fan
One processor, redundant	Blank	Fan	Fan	Fan	Fan

Two processors, non-redundant	Fan	Fan	Blank	Fan	Fan
Two processors, redundant	Fan	Fan	Fan	Fan	Fan

- In a redundant fan mode:
  - If one fan fails, the system continues to operate without redundancy. This condition is indicated by a flashing amber Health LED.
  - If two fans fail, the system shuts down.
- The minimum fan requirement to make this server bootable is:
  - Two fans (fans 2 and 5) for a single processor configuration
  - Four fans (fans 1, 2, 4, and 5) for dual processor configuration

Fan blank

WARNING: To reduce the risk of personal injury from hot surfaces, allow the drives and the internal system components to cool before touching them.

CAUTION: To prevent damage to electrical components, take the appropriate anti-static precautions before beginning any installation, removal, or replacement procedure. Improper grounding can cause electrostatic discharge.

CAUTION: To prevent improper cooling and thermal damage, do not operate the server unless all bays are populated with either a component or a blank.

To remove the component:

1. If a full-length expansion board is installed in the server, do the following:
   a. Power down the server (on page 27).
   b. Disconnect each power cord from the power source.
   c. Disconnect each power cord from the server.
2. Do one of the following:
   - Extend the server from the rack (on page 27).
   - Remove the server from the rack (on page 30).
3. Remove the access panel ("Access panel" on page 37).
4. Remove the air baffle (on page 32).

5. Remove the fan blank.

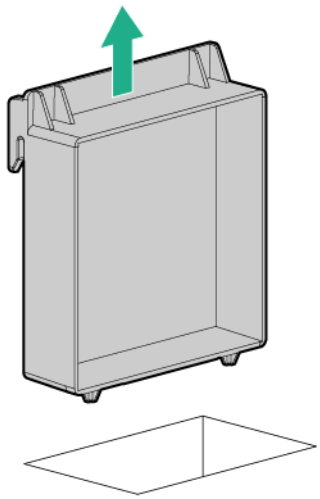

To replace the component, reverse the removal procedure.

Hot-swap fan

WARNING: To reduce the risk of personal injury from hot surfaces, allow the drives and the internal system components to cool before touching them.

CAUTION: To prevent damage to electrical components, take the appropriate anti-static precautions before beginning any installation, removal, or replacement procedure. Improper grounding can cause electrostatic discharge.

CAUTION: To prevent improper cooling and thermal damage, do not operate the server unless all bays are populated with either a component or a blank.

To remove the component:

1. If a full-length expansion board is installed in the server, do the following:
   a. Power down the server (on page 27).
   b. Disconnect each power cord from the power source.
   c. Disconnect each power cord from the server.
2. Do one of the following:
   - Extend the server from the rack (on page 27).
   - Remove the server from the rack (on page 30).
3. Remove the access panel ("Access panel" on page 37).
4. Remove the air baffle (on page 32).
5. Disconnect the fan cable.

6. Remove the fan.

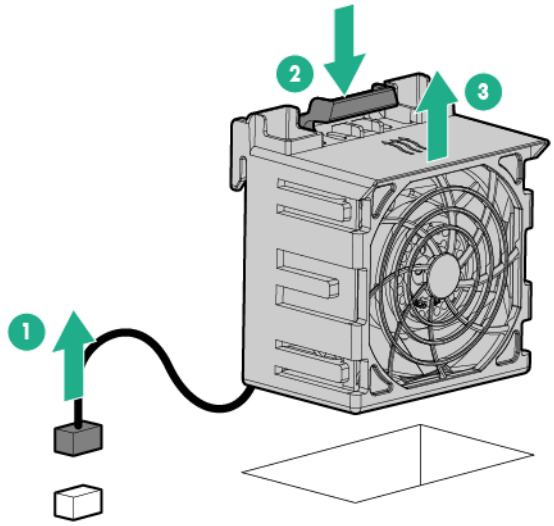

To replace the component, reverse the removal procedure.

DIMM

WARNING: To reduce the risk of personal injury from hot surfaces, allow the drives and the internal system components to cool before touching them.

CAUTION: To prevent damage to electrical components, take the appropriate anti-static precautions before beginning any installation, removal, or replacement procedure. Improper grounding can cause electrostatic discharge.

To remove the component:

1. Power down the server (on page 27).
2. Remove all power:
   a. Disconnect each power cord from the power source.
   b. Disconnect each power cord from the server.
3. Do one of the following:
   - Extend the server from the rack (on page 27).
   - Remove the server from the rack (on page 30).
4. Remove the access panel ("Access panel" on page 37).
5. Remove the air baffle (on page 32).
6. Open the DIMM slot latches.

7. Remove the DIMM.

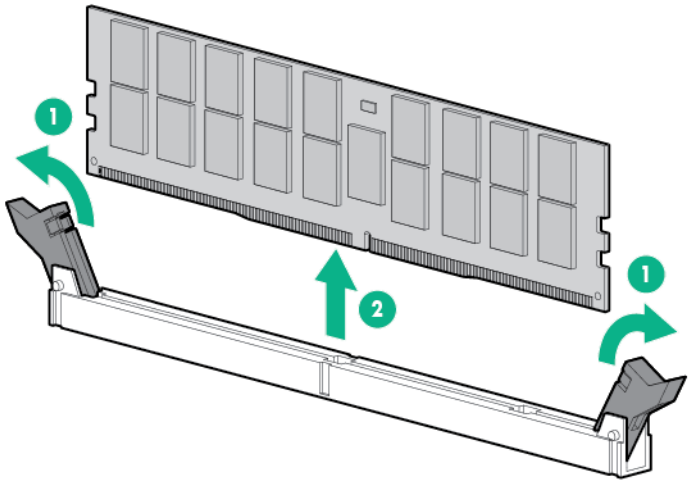

To replace the component, reverse the removal procedure.

Heatsink

> **WARNING:** To reduce the risk of personal injury from hot surfaces, allow the drives and the internal system components to cool before touching them.

> **CAUTION:** To prevent damage to electrical components, take the appropriate anti-static precautions before beginning any installation, removal, or replacement procedure. Improper grounding can cause electrostatic discharge.

To remove the component:

1. Power down the server (on page 27).
2. Remove all power:
   a. Disconnect each power cord from the power source.
   b. Disconnect each power cord from the server.
3. Do one of the following:
   - Extend the server from the rack (on page 27).
   - Remove the server from the rack (on page 30).
4. Remove the access panel ("Access panel" on page 37).
5. Remove the air baffle (on page 32).
6. Remove the heatsink:
   a. Loosen one pair of diagonally opposite screws halfway, and then loosen the other pair of screws.
   b. Completely loosen all screws in the same sequence.

c. Remove the heatsink from the processor backplate.

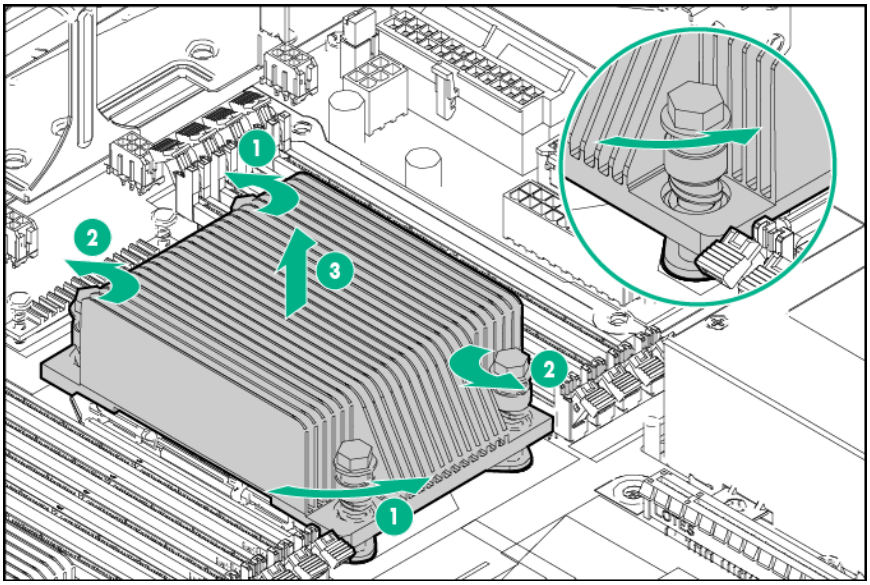

To replace the component:

1. Clean the old thermal grease from the processor with the alcohol swab. Allow the alcohol to evaporate before continuing.
2. Remove the thermal interface protective cover from the heatsink.

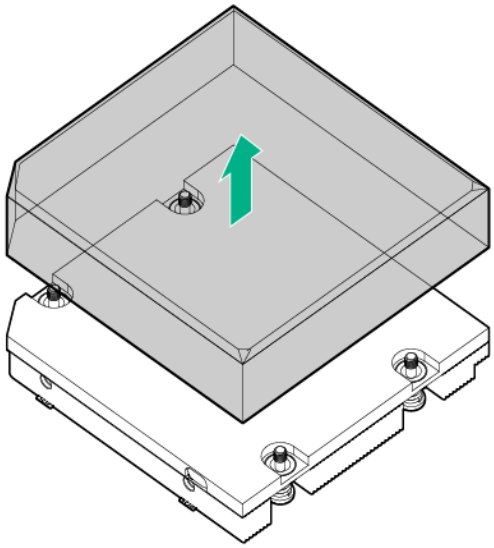

3. Install the heatsink:
   a. Position the heatsink on the processor backplate.
   b. Tighten one pair of diagonally opposite screws halfway, and then tighten the other pair of screws.

c. Finish the installation by completely tightening the screws in the same sequence.

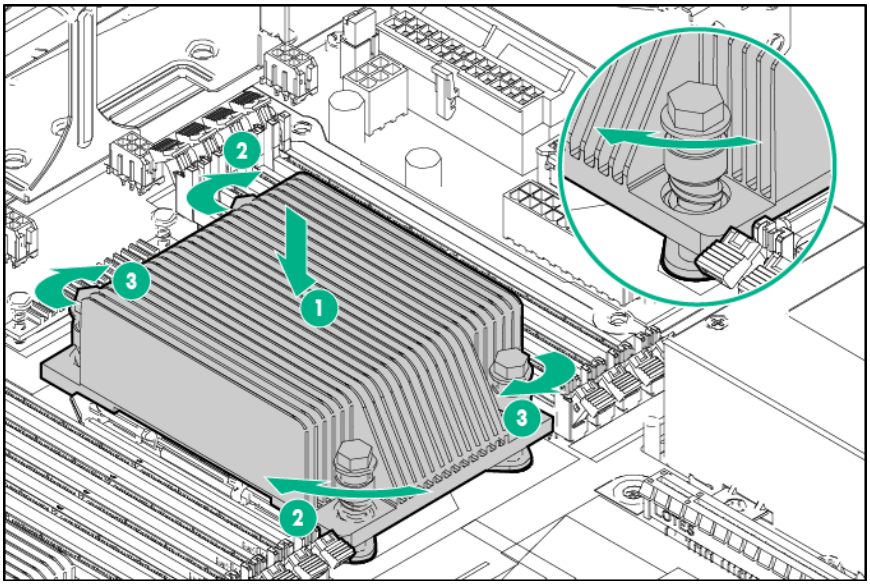

4. Install the air baffle.
5. Install the access panel.
6. Do one of the following:
   - Slide the server into the rack.
   - Install the server into the rack.
7. Connect each power cord to the server.
8. Connect each power cord to the power source.
9. Press the Power On/Standby button.

   The server exits standby mode and applies full power to the system. The system power LED changes from amber to green.

Processor

WARNING: To reduce the risk of personal injury from hot surfaces, allow the drives and the internal system components to cool before touching them.

CAUTION: To avoid damage to the processor and system board, only authorized personnel should attempt to replace or install the processor in this server.

CAUTION: To prevent possible server malfunction and damage to the equipment, multiprocessor configurations must contain processors with the same part number.

CAUTION: To prevent possible server overheating, always populate processor socket 2 with a processor and a heatsink or a processor socket cover and a heatsink blank.

CAUTION: To prevent damage to electrical components, take the appropriate anti-static precautions before beginning any installation, removal, or replacement procedure. Improper grounding can cause electrostatic discharge.

IMPORTANT: If installing a processor with a faster speed, update the system ROM before installing the processor.

IMPORTANT: Processor socket 1 must be populated at all times or the server does not function.

To remove the component:

1. Power down the server (on page 27).
2. Remove all power:
   a. Disconnect each power cord from the power source.
   b. Disconnect each power cord from the server.
3. Do one of the following:
   - Extend the server from the rack (on page 27).
   - Remove the server from the rack (on page 30).
4. Remove the access panel ("Access panel" on page 37).
5. Remove the air baffle (on page 32).
6. Remove the heatsink ("Heatsink" on page 53).
7. Open each of the processor locking levers in the order indicated, and then open the processor retaining bracket.

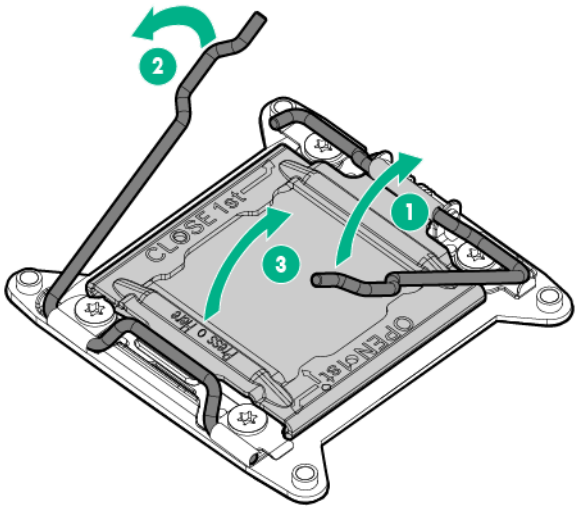

CAUTION: THE PINS ON THE SYSTEM BOARD ARE VERY FRAGILE AND EASILY DAMAGED. To avoid damage to the system board, do not touch the processor or the processor socket contacts.

8. Remove the processor from the processor retaining bracket.

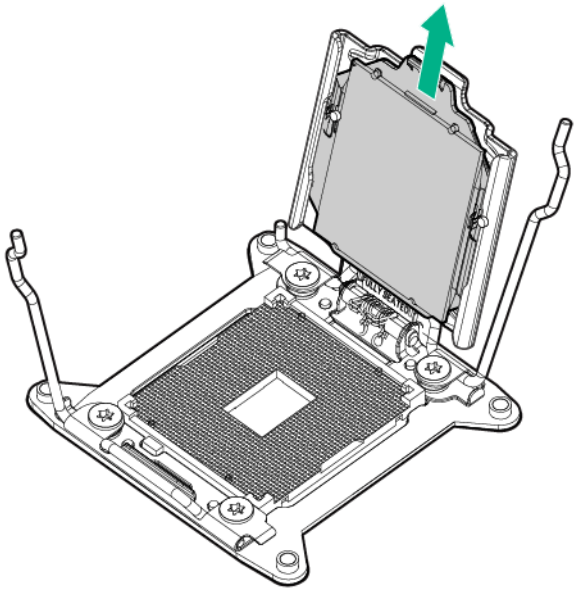

To replace the component:

1. Install the processor. Verify that the processor is fully seated in the processor retaining bracket by visually inspecting the processor installation guides on either side of the processor. **THE PINS ON THE SYSTEM BOARD ARE VERY FRAGILE AND EASILY DAMAGED**.

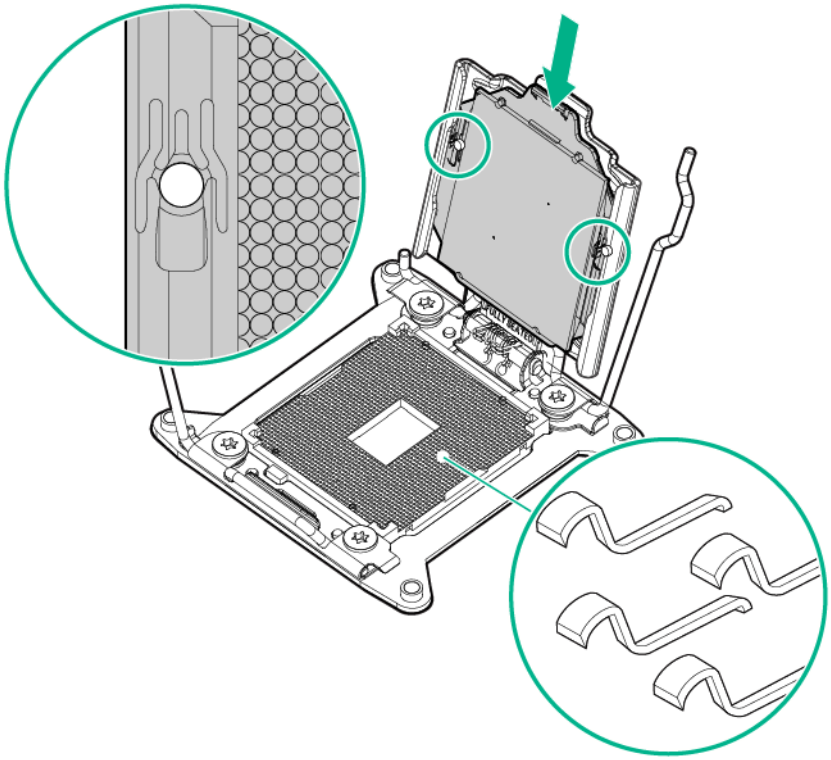

△ **CAUTION: THE PINS ON THE SYSTEM BOARD ARE VERY FRAGILE AND EASILY DAMAGED.** To avoid damage to the system board, do not touch the processor or the processor socket contacts.

△ **CAUTION:** Do not press down on the processor. Pressing down on the processor may cause damage to the processor socket and the system board. Press only in the area indicated on the processor retaining bracket.

2. Close the processor retaining bracket. When the processor is installed properly inside the processor retaining bracket, the processor retaining bracket clears the flange on the front of the socket.
3. Press and hold the processor retaining bracket in place, and then close each processor locking lever. Press only in the area indicated on the processor retaining bracket.

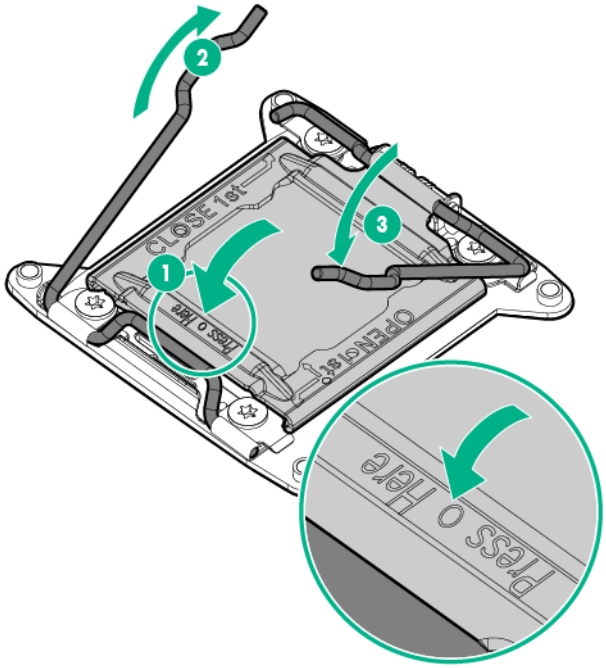

4. Clean the old thermal grease from the heatsink with the alcohol swab. Allow the alcohol to evaporate before continuing.
5. Apply all the grease to the top of the processor in the following pattern to ensure even distribution.

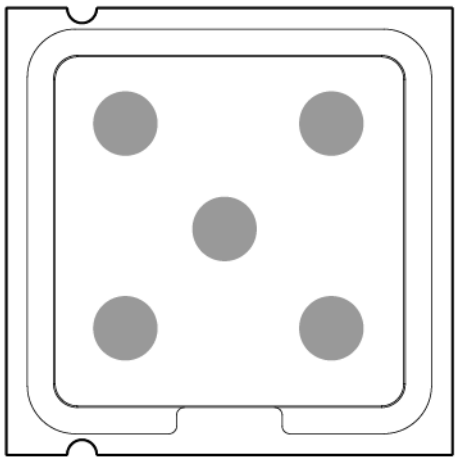

6. Install the heatsink:
   a. Position the heatsink on the processor backplate.
   b. Tighten one pair of diagonally opposite screws halfway, and then tighten the other pair of screws.

c. Finish the installation by completely tightening the screws in the same sequence.

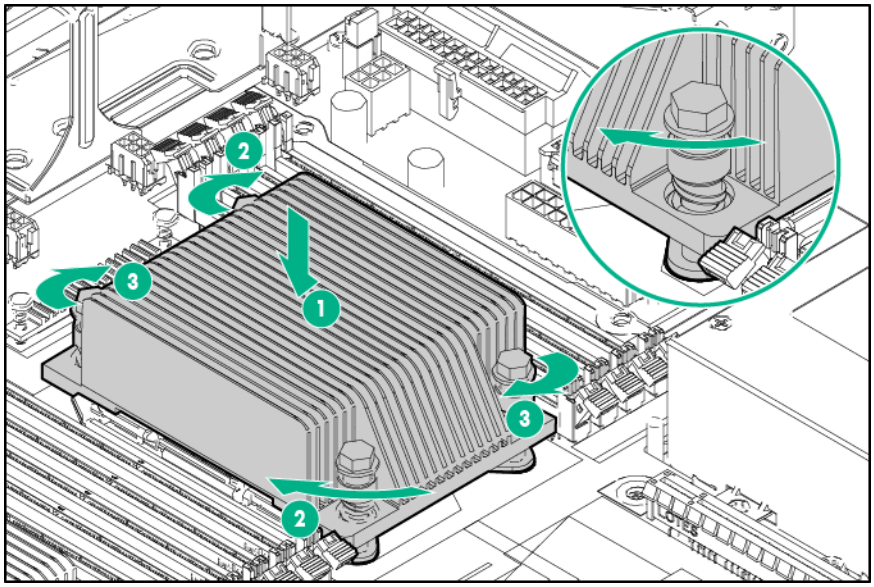

7. Install the air baffle.
8. Install the access panel.
9. Do one of the following:
   - Slide the server into the rack.
   - Install the server into the rack.
10. Connect each power cord to the server.
11. Connect each power cord to the power source.
12. Press the Power On/Standby button.

    The server exits standby mode and applies full power to the system. The system power LED changes from amber to green.

Expansion board

WARNING: To reduce the risk of personal injury from hot surfaces, allow the drives and the internal system components to cool before touching them.

CAUTION: To prevent damage to electrical components, take the appropriate anti-static precautions before beginning any installation, removal, or replacement procedure. Improper grounding can cause electrostatic discharge.

To remove the component:

1. Power down the server (on page 27).
2. Remove all power:
   a. Disconnect each power cord from the power source.
   b. Disconnect each power cord from the server.
3. Do one of the following:
   - Extend the server from the rack (on page 27).
   - Remove the server from the rack (on page 30).
4. Remove the access panel ("Access panel" on page 37).
5. Remove the PCI riser cage ("Remove the PCI riser cages" on page 31).

6. Disconnect any internal cables that are connected to the expansion board.
7. If you are removing a storage controller board with a cache module installed, remove the cache module ("FBWC module" on page 44).
8. Remove the expansion board.

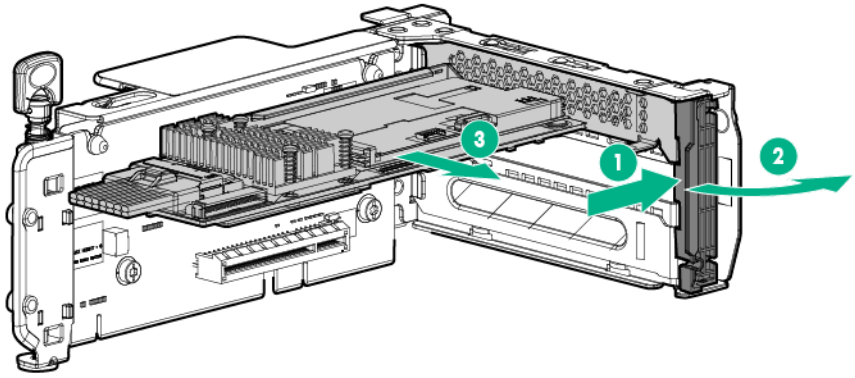

To replace the component, reverse the removal procedure.

Two-slot and three-slot PCIe riser boards

WARNING: To reduce the risk of personal injury from hot surfaces, allow the drives and the internal system components to cool before touching them.

CAUTION: To prevent damage to electrical components, take the appropriate anti-static precautions before beginning any installation, removal, or replacement procedure. Improper grounding can cause electrostatic discharge.

To remove the component:

1. Power down the server (on page 27).
2. Remove all power:
   a. Disconnect each power cord from the power source.
   b. Disconnect each power cord from the server.
3. Do one of the following:
   - Extend the server from the rack (on page 27).
   - Remove the server from the rack (on page 30).
4. Remove the access panel ("Access panel" on page 37).
5. Remove the PCI riser cage ("Remove the PCI riser cages" on page 31).
6. If an expansion board is installed in the PCI riser cage, remove the board ("Expansion board" on page 59).
7. Remove the PCIe riser board.

- Two-slot PCIe riser board

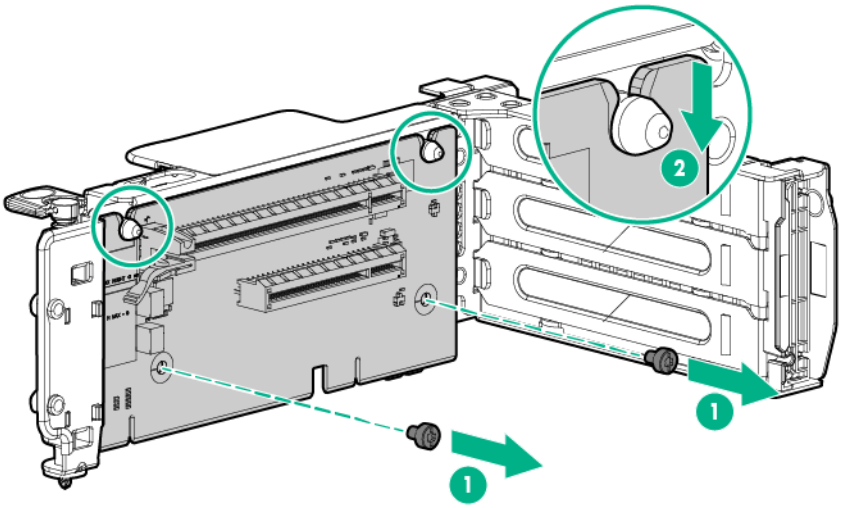

- Three-slot PCIe riser board

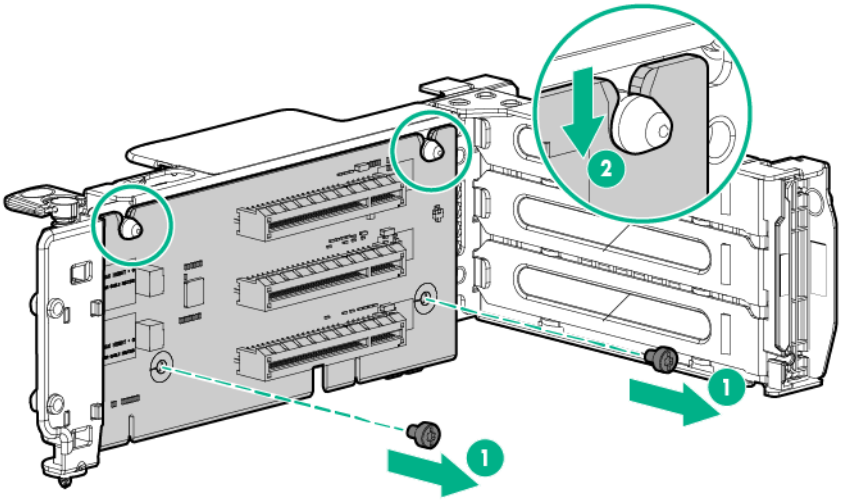

To replace the component, reverse the removal procedure.

FlexibleLOM riser board

WARNING: To reduce the risk of personal injury from hot surfaces, allow the drives and the internal system components to cool before touching them.

CAUTION: To prevent damage to electrical components, take the appropriate anti-static precautions before beginning any installation, removal, or replacement procedure. Improper grounding can cause electrostatic discharge.

To remove the component:

1. Power down the server (on page 27).
2. Remove all power:

a. Disconnect each power cord from the power source.
b. Disconnect each power cord from the server.

3. Do one of the following:
   - Extend the server from the rack (on page 27).
   - Remove the server from the rack (on page 30).
4. Remove the access panel ("Access panel" on page 37).
5. Disconnect the FlexibleLOM sideband signal cable from the riser board.

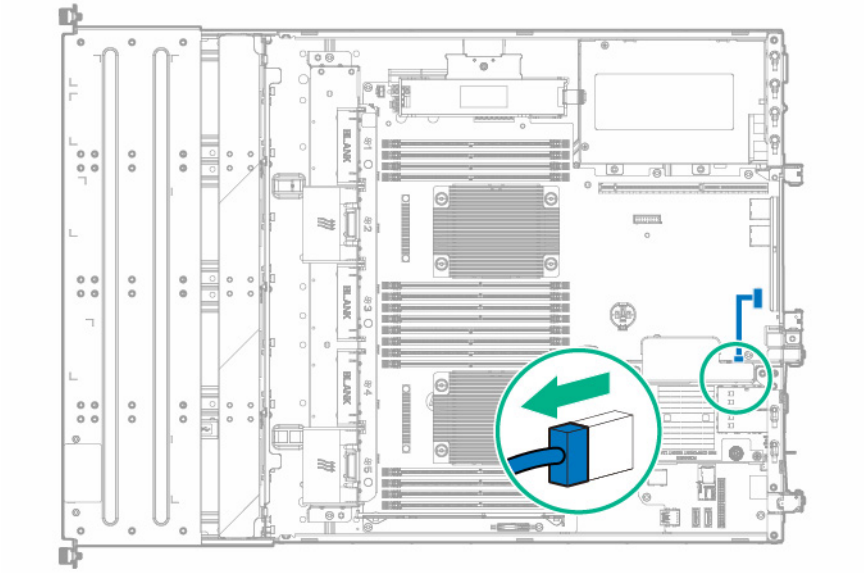

CAUTION: To prevent improper cooling and thermal damage, do not operate the server unless all PCI slots have either an expansion slot cover or an expansion board installed.

6. Remove the FlexibleLOM riser cage.

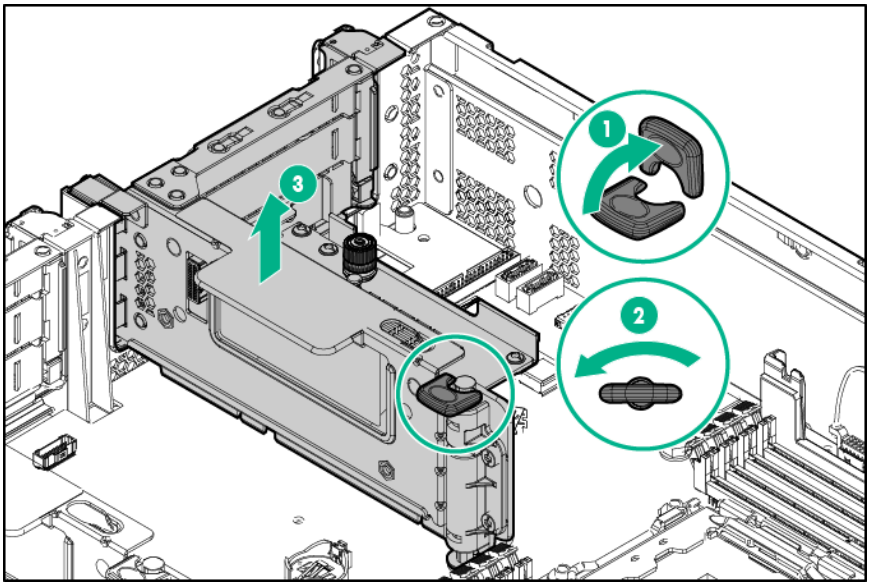

7. If an expansion board is installed in the PCI riser cage, remove the board ("Expansion board" on page 59).

8. Remove the FlexibleLOM riser board.

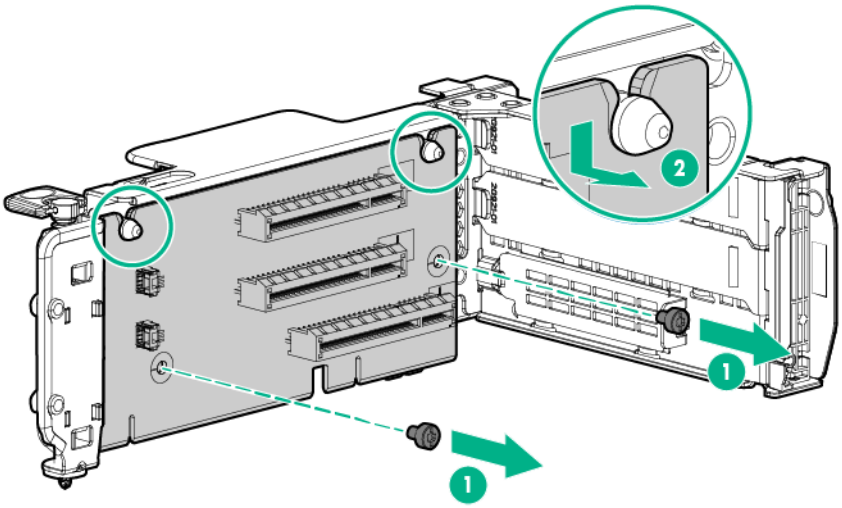

To replace the component, reverse the removal procedure.

System battery

If the server no longer automatically displays the correct date and time, then replace the battery that provides power to the real-time clock. Under normal use, battery life is 5 to 10 years.

⚠ **WARNING:** The computer contains an internal lithium manganese dioxide, a vanadium pentoxide, or an alkaline battery pack. A risk of fire and burns exists if the battery pack is not properly handled. To reduce the risk of personal injury:

- Do not attempt to recharge the battery.
- Do not expose the battery to temperatures higher than 60°C (140°F).
- Do not disassemble, crush, puncture, short external contacts, or dispose of in fire or water.
- Replace only with the spare designated for this product.

To remove the component:

1. Power down the server (on page 27).
2. Remove all power:
   a. Disconnect each power cord from the power source.
   b. Disconnect each power cord from the server.
3. Do one of the following:
   - Extend the server from the rack (on page 27).
   - Remove the server from the rack (on page 30).
4. Remove the access panel ("Access panel" on page 37).
5. If there is a secondary PCI riser cage installed and an expansion board is installed on it, remove the secondary PCI riser cage ("Remove the PCI riser cages" on page 31).
6. Locate the battery on the system board.
7. If the system battery is secured by a metal tab, do the following:
   a. Use your finger or a small flat-bladed, nonconductive tool to press the metal tab. This will partially release the battery from the socket.

b. Remove the battery.

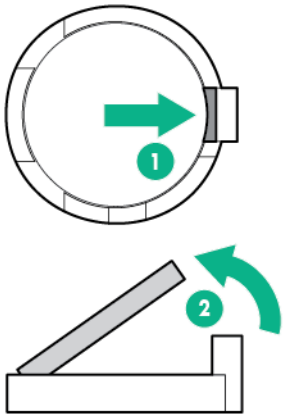

8. If the system battery is secured by a plastic outer lip, do the following:
   a. Use a small flat-bladed, nonconductive tool to carefully lift the front of the battery from the socket.
   b. Remove the battery.

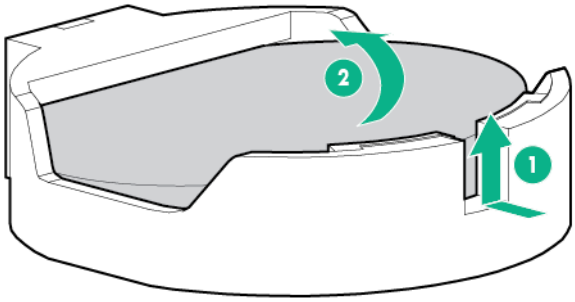

⚠ **IMPORTANT:** Replacing the system board battery resets the system ROM to its default configuration. After replacing the battery, use BIOS/Platform Configuration (RBSU) in the UEFI System Utilities ("HPE UEFI System Utilities" on page 89) to reconfigure the system.

To install the component:

1. If the battery socket design uses a metal tab to secure the battery, insert the battery with the "+" side facing up on the socket, and then press the battery down to secure it in place.

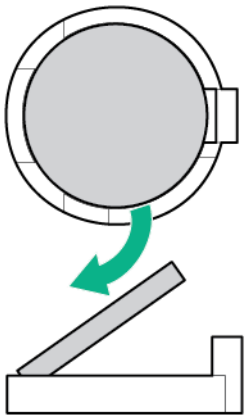

2. If the battery socket design has a plastic outer lip to secure the battery, insert the battery with the "+" side facing up underneath the outer lip of the socket, and then press the battery down to secure it in place.

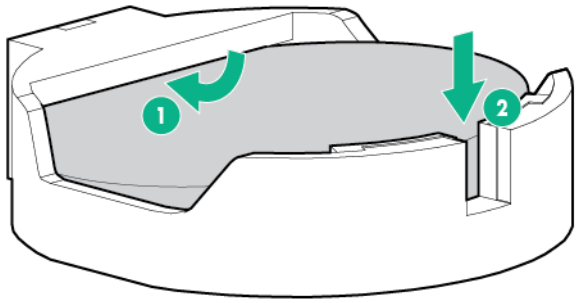

3. If removed, install the secondary PCI riser cage.
4. Install the access panel.
5. Do one of the following:
   - Slide the server into the rack.
   - Install the server into the rack.
6. Power up the server.

For more information about battery replacement or proper disposal, contact an authorized reseller or an authorized service provider.

Dedicated iLO management module

WARNING: To reduce the risk of personal injury from hot surfaces, allow the drives and the internal system components to cool before touching them.

CAUTION: To prevent damage to electrical components, take the appropriate anti-static precautions before beginning any installation, removal, or replacement procedure. Improper grounding can cause electrostatic discharge.

To remove the component:

1. Power down the server (on page 27).
2. Remove all power:
   a. Disconnect each power cord from the power source.
   b. Disconnect each power cord from the server.
3. Do one of the following:
   - Extend the server from the rack (on page 27).
   - Remove the server from the rack (on page 30).
4. Remove the access panel ("Access panel" on page 37).
5. If an expansion board is installed in the primary PCI riser cage, then remove the PCI riser cage ("Remove the PCI riser cages" on page 31).

6. Remove the dedicated iLO management module.

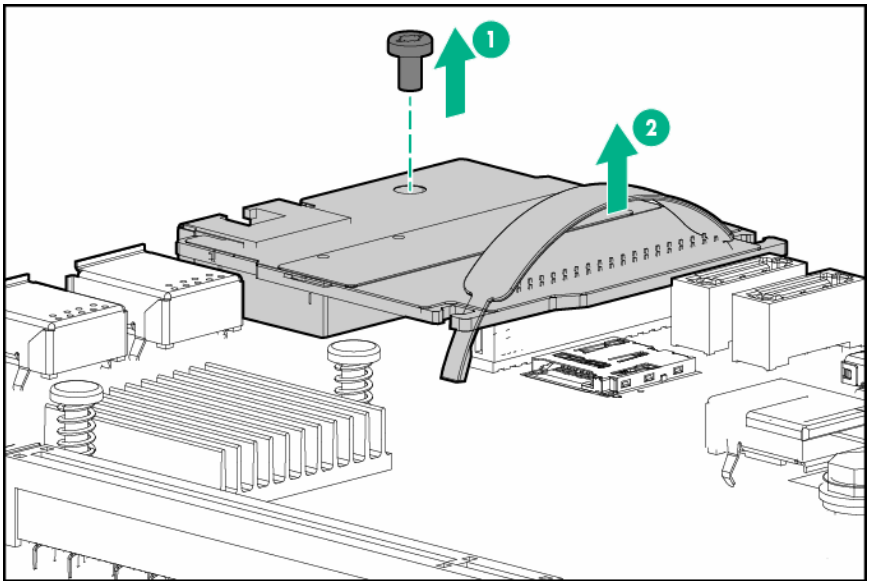

To replace the component, reverse the removal procedure. After installing the new dedicated iLO management module, enable the dedicated iLO connector ("Enabling the dedicated iLO management module" on page 66).

Enabling the dedicated iLO management module

The onboard NIC 1/shared iLO connector is set as the default system iLO connector. To enable the dedicated iLO management module, use the iLO 4 Configuration Utility accessible within the HPE UEFI System Utilities.

For more information on the UEFI System Utilities, see the UEFI documentation on the Hewlett Packard Enterprise website (http://www.hpe.com/info/ProLiantUEFI/docs).

IMPORTANT: If the iLO configuration settings are reset to the default values, remote access to the machine will be lost. Access the physical machine and repeat the procedure described in this section to re-enable the dedicated iLO management connector.

To enable the dedicated iLO management module:

1. During the server startup sequence after installing the module, press **F9** in the POST screen.

   The System Utilities screen appears.
2. Select **System Configuration** | **iLO 4 Configuration Utility**.

   The iLO 4 Configuration Utility screen appears.
3. Select **Network Options**, and then press **Enter**.

   The Network Options screen appears.
4. Set the **Network Interface Adapter** field to **ON**, and then press **Enter**.
5. Press **F10** to save your changes.

   A message prompt to confirm the iLO settings reset appears.
6. Press **Enter** to reboot the iLO settings.
7. Press **Esc** until the main menu is displayed.
8. Select **Reboot the System** to exit the utility and resume the boot process.

   The IP address of the enabled dedicated iLO connector appears on the POST screen on the subsequent boot-up. Access the Network Options screen again to view this IP address for later reference.

Front I/O assemblies for LFF and SFF chassis using thumbscrew rack ears

> **CAUTION:** To prevent damage to electrical components, take the appropriate anti-static precautions before beginning any installation, removal, or replacement procedure. Improper grounding can cause electrostatic discharge.

To remove the component:

1. Power down the server (on page 27).
2. Remove all power:
   a. Disconnect each power cord from the power source.
   b. Disconnect each power cord from the server.
3. Do one of the following:
   - Extend the server from the rack (on page 27).
   - Remove the server from the rack (on page 30).
4. If installed, remove the security bezel ("Remove the security bezel (optional)" on page 27).
5. Remove the access panel ("Access panel" on page 37).
6. Release the front I/O cabling from the server:
   a. Detach the ambient thermal sensor cable from its clip.
   b. Release the ambient thermal sensor cable from the front chassis cable clip.
   c. Disconnect the front I/O assembly cable.

— Front I/O cabling disconnection in an LFF chassis

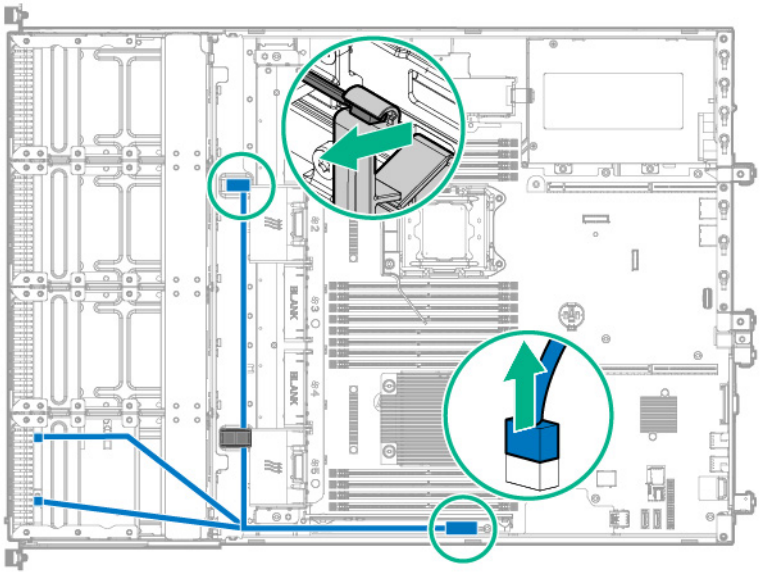

— Front I/O cabling disconnection in an SFF chassis

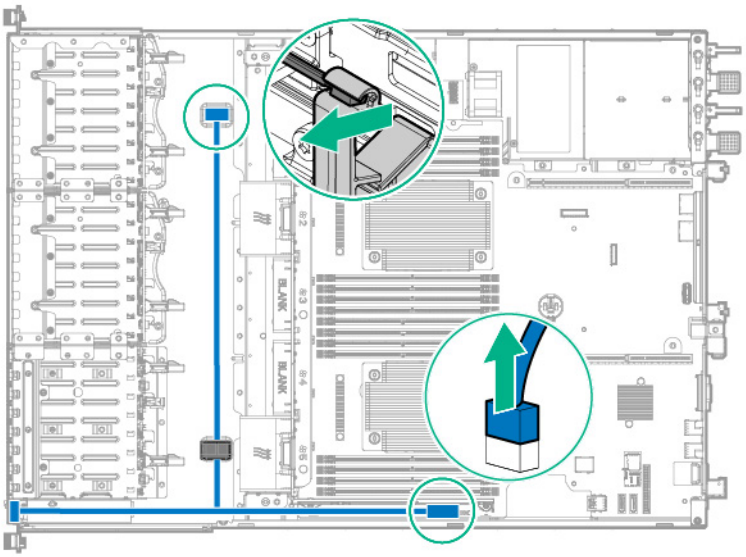

7. Remove the front I/O assembly from the chassis:
   - Front I/O assembly removal in an LFF chassis

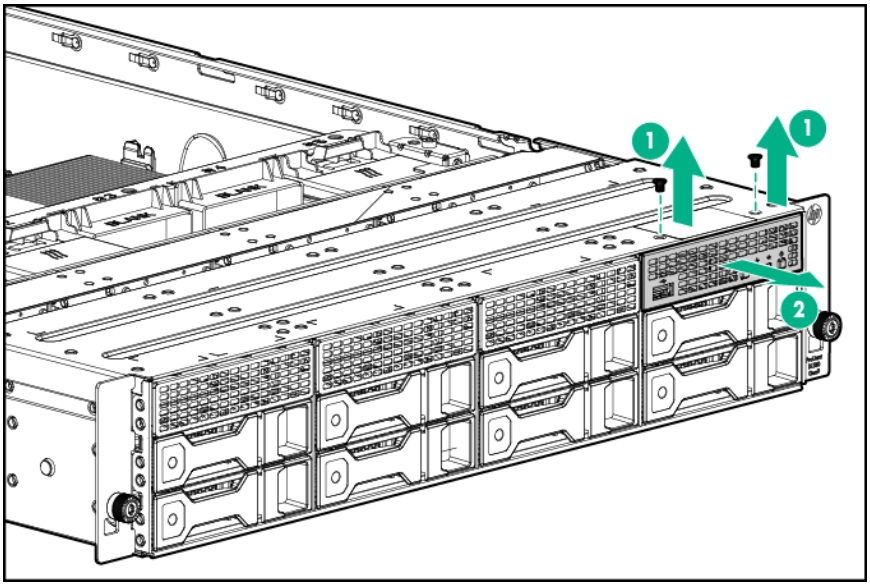

- Front I/O assembly removal in an SFF chassis

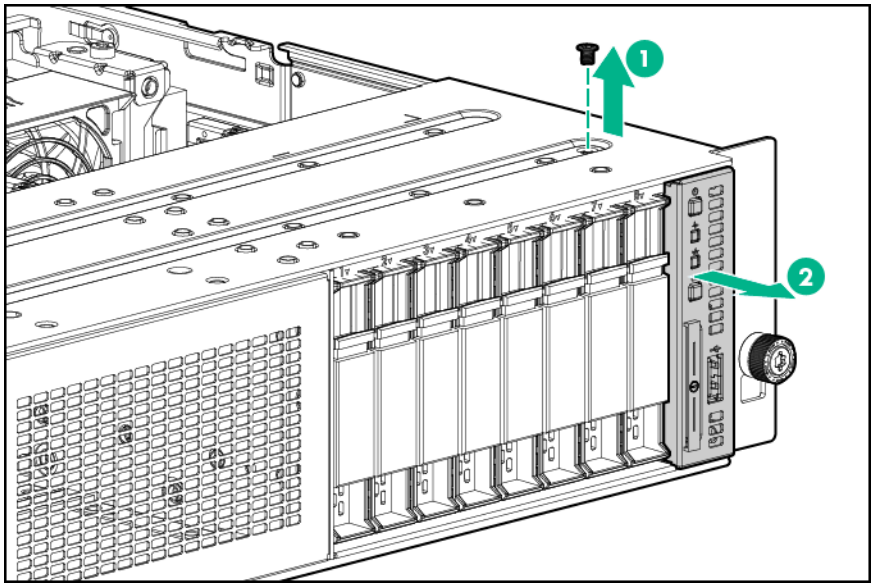

To replace the component, reverse the removal procedure.

Quick-release latch rack ear assembly

WARNING: To reduce the risk of personal injury from hot surfaces, allow the drives and the internal system components to cool before touching them.

CAUTION: To prevent damage to electrical components, take the appropriate anti-static precautions before beginning any installation, removal, or replacement procedure. Improper grounding can cause electrostatic discharge.

To remove the component:

1. Power down the server (on page 27).
2. Remove all power:
   a. Disconnect each power cord from the power source.
   b. Disconnect each power cord from the server.
3. Remove the server from the rack (on page 30).
4. If installed, remove the security bezel ("Remove the security bezel (optional)" on page 27).
5. Remove the access panel ("Access panel" on page 37).
6. If an expansion board is installed in the primary PCI riser cage, then remove the PCI riser cage ("Remove the PCI riser cages" on page 31).
7. Release the front I/O cabling from the server:
   a. Detach the ambient thermal sensor cable from its clip.
   b. Release the ambient thermal sensor cable from the front chassis cable clip.
   c. Disconnect the USB 3.0 cable.
   d. Disconnect the front I/O assembly cable.

e. Release the front I/O cabling from the side chassis metal clip.

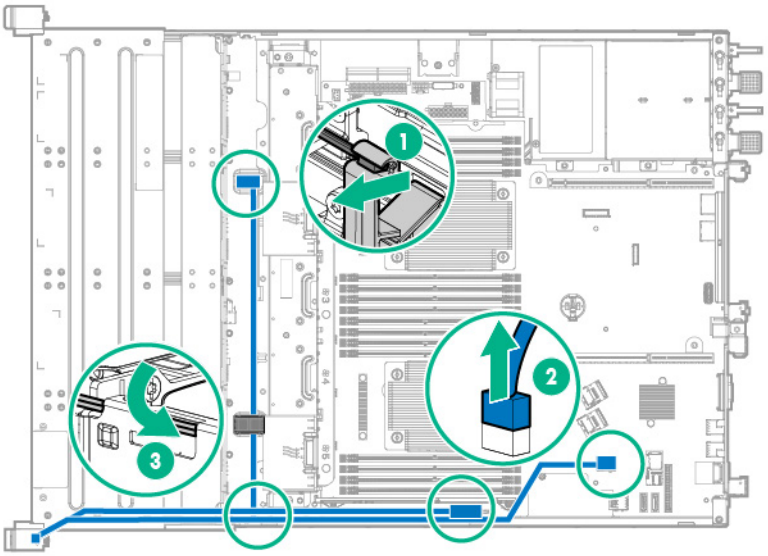

8. Remove the cable cover behind the right quick-release latch rack ear.

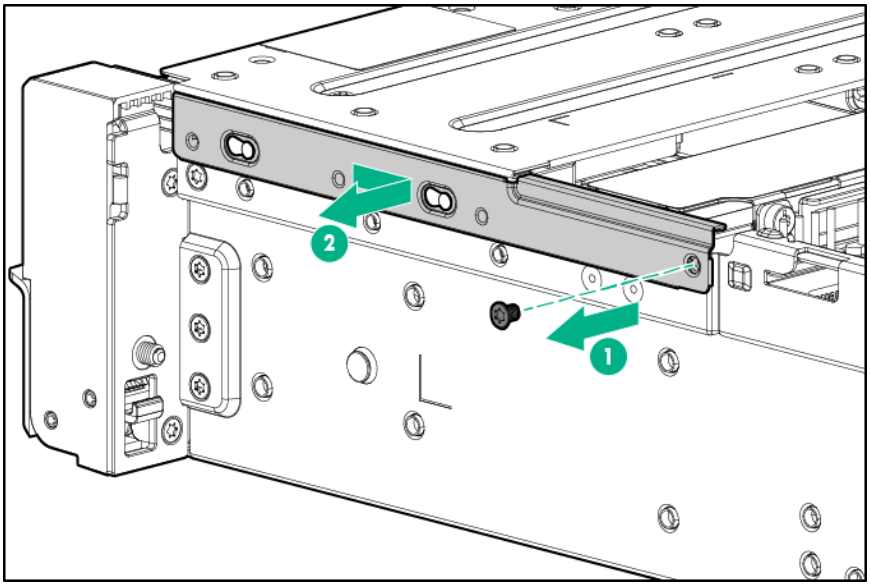

9. Remove the right quick-release latch rack ear assembly.

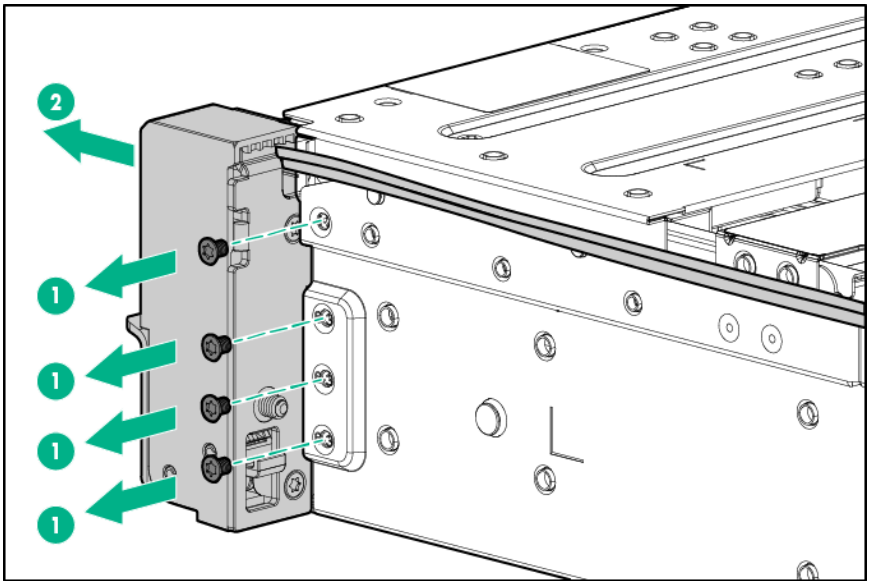

10. Remove the left quick-release latch rack ear.

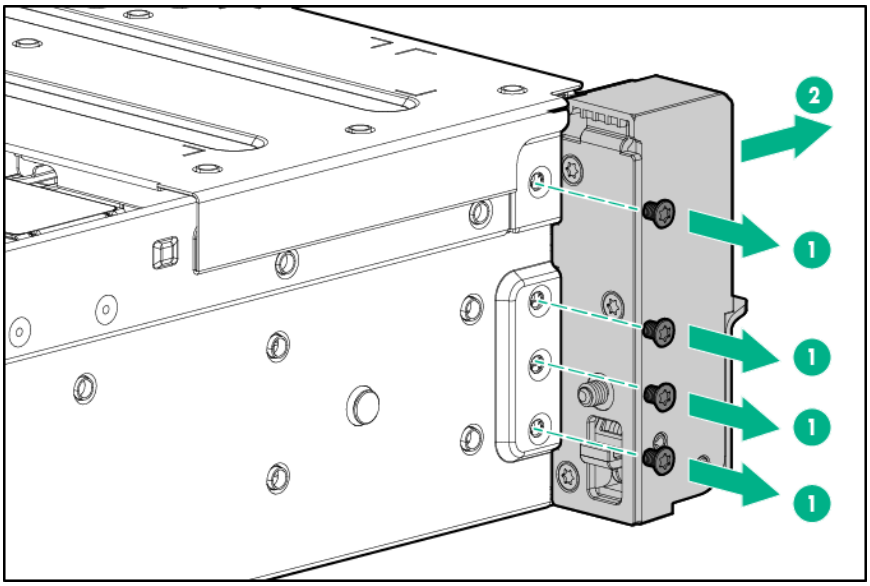

To replace the component, reverse the removal procedure.

Pull tab cage for SFF chassis using quick-release latch rack ears

△ **CAUTION:** To prevent damage to electrical components, take the appropriate anti-static precautions before beginning any installation, removal, or replacement procedure. Improper grounding can cause electrostatic discharge.

To remove the component:

1. Power down the server (on page 27).
2. Remove all power:
   a. Disconnect each power cord from the power source.

b. Disconnect each power cord from the server.

3. Remove the server from the rack (on page 30).
4. If installed, remove the security bezel ("Remove the security bezel (optional)" on page 27).
5. Remove the right quick-release latch rack ear screws, and then move the ear away from the right side of the pull tab cage.

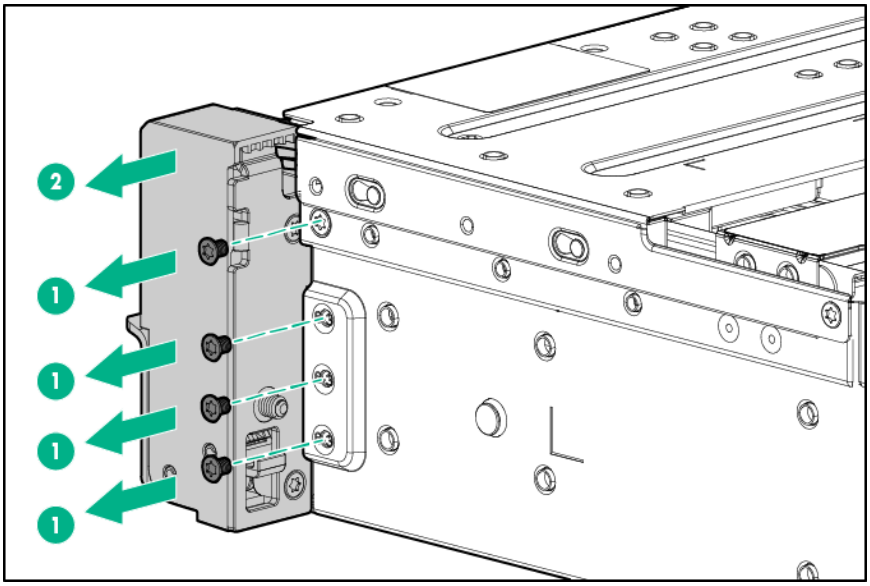

6. Remove the pull tab cage.

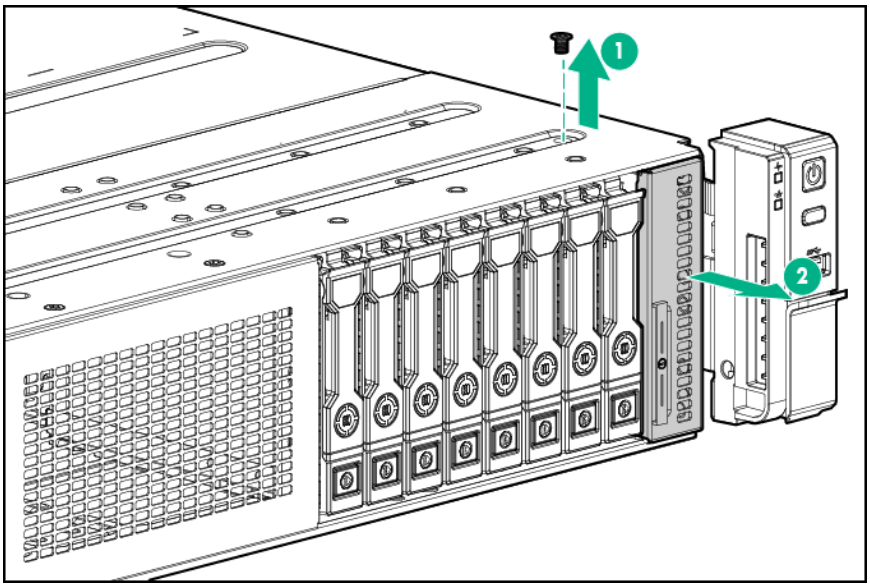

To replace the component, reverse the removal procedure.

System board

⚠ **WARNING:** To reduce the risk of personal injury from hot surfaces, allow the drives and the internal system components to cool before touching them.

△ **CAUTION:** To prevent damage to electrical components, take the appropriate anti-static precautions before beginning any installation, removal, or replacement procedure. Improper grounding can cause electrostatic discharge.

CAUTION: To avoid ESD damage, when removing electrostatic-sensitive components from the failed system board, place the components on a static-dissipating work surface or inside separate antistatic bags.

To remove the system board:

1. Power down the server (on page 27).
2. Remove all power:
   a. Disconnect each power cord from the power source.
   b. Disconnect each power cord from the server.
3. Do one of the following:
   - Extend the server from the rack (on page 27).
   - Remove the server from the rack (on page 30).
4. Remove the access panel ("Access panel" on page 37).
5. Remove the PCI riser cages (on page 31).
6. Remove the air baffle (on page 32).
7. Remove the fan cage (on page 33).
8. Remove all DIMMs ("DIMM" on page 52).
9. Remove the heatsink:
   a. Loosen one pair of diagonally opposite screws halfway, and then loosen the other pair of screws.
   b. Completely loosen all screws in the same sequence.
   c. Remove the heatsink from the processor backplate.

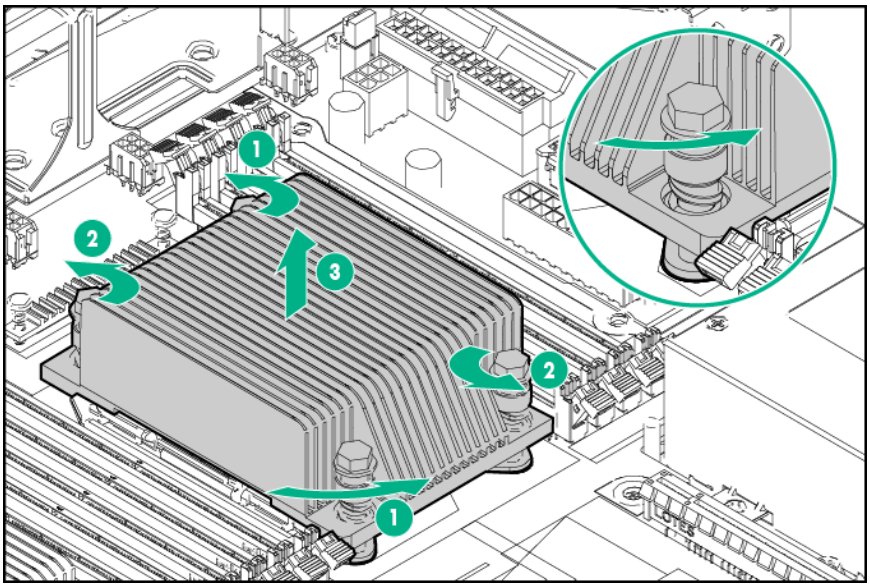

10. Open each of the processor locking levers in the order indicated, and then open the processor retaining bracket.

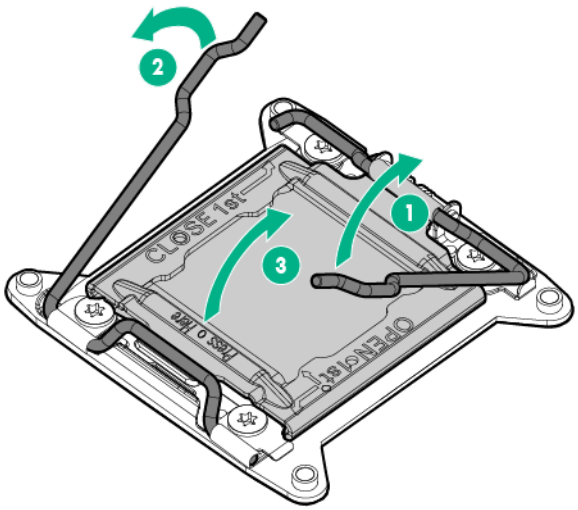

△ **CAUTION: THE PINS ON THE SYSTEM BOARD ARE VERY FRAGILE AND EASILY DAMAGED.** To avoid damage to the system board, do not touch the processor or the processor socket contacts.

11. Remove the processor from the processor retaining bracket.

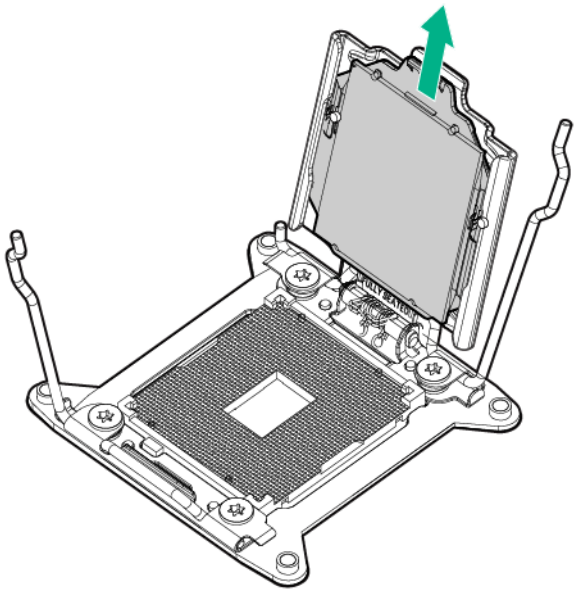

12. If installed, remove the dedicated iLO module ("Dedicated iLO management module" on page 65).
13. Disconnect all cables connected to the system board.

14. Remove the failed system board.

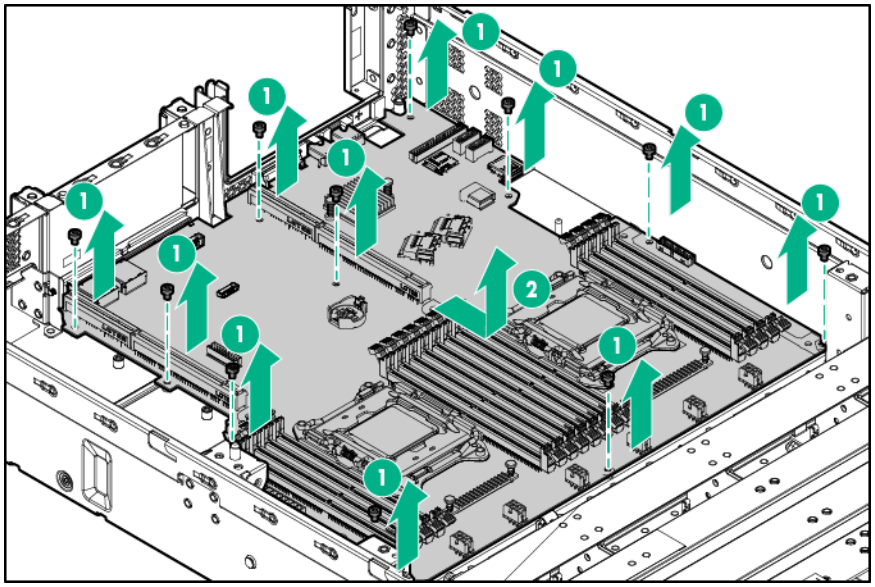

15. Remove the DIMM guard from the failed system board.

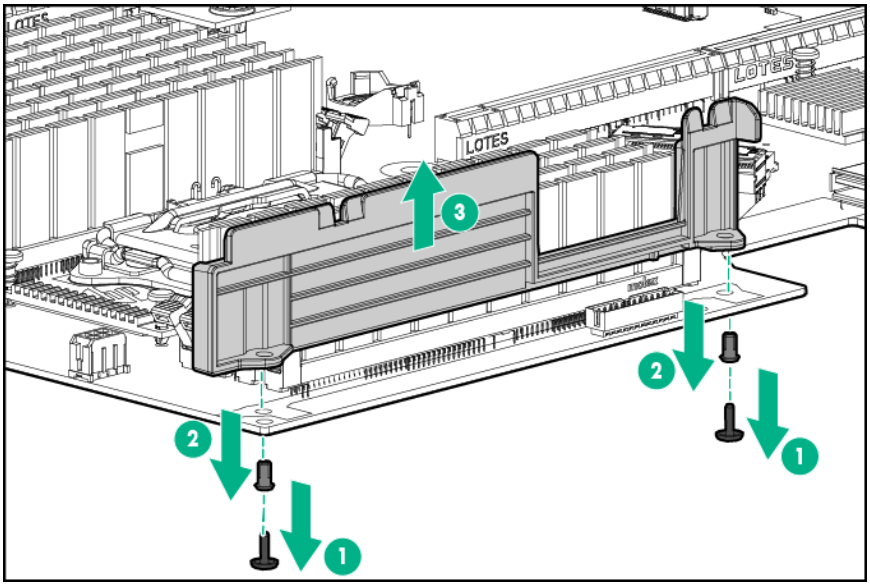

To replace the system board:

1. Install the DIMM guard removed from the failed system board on the system board replacement.

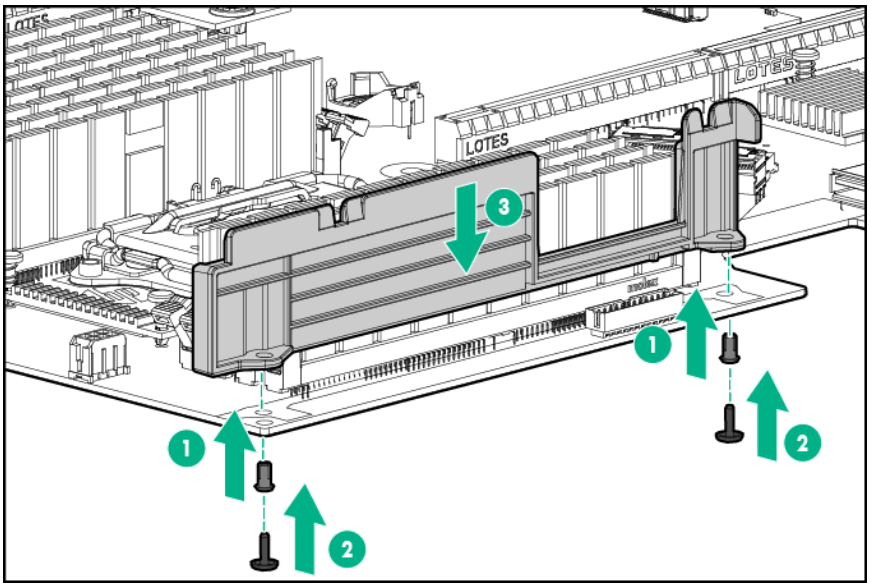

2. Install the system board.

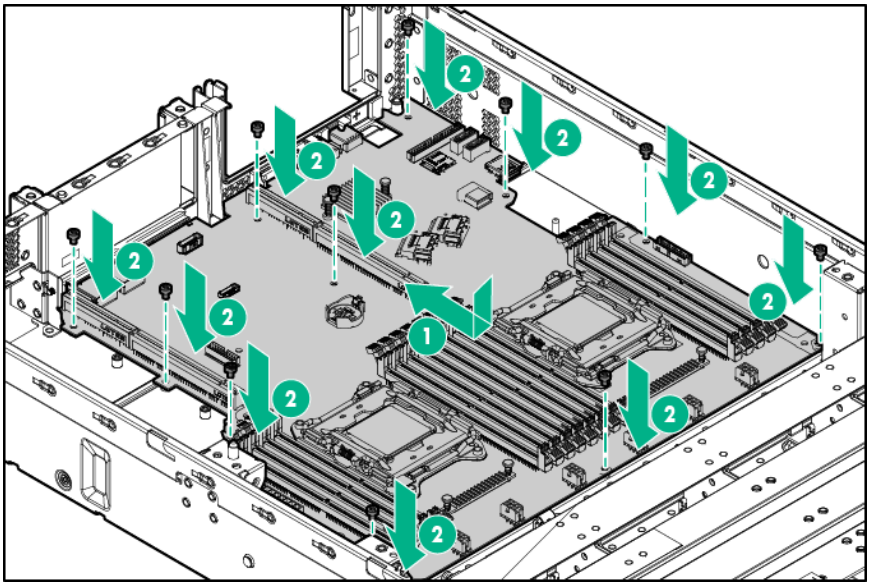

3. Open each of the processor locking levers in the order indicated, and then open the processor retaining bracket.

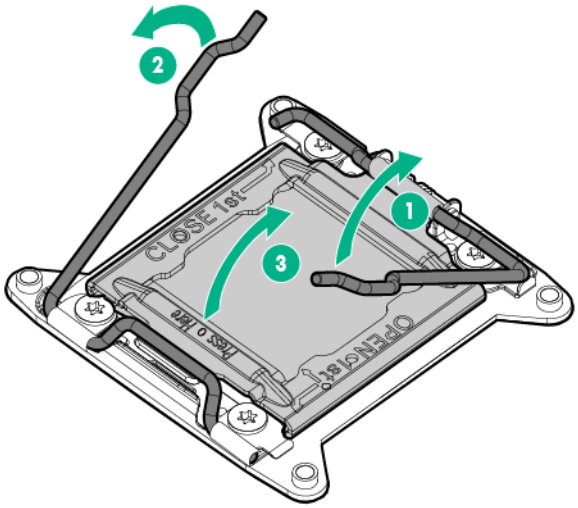

4. Remove the clear processor socket cover. Retain the processor socket cover for future use.

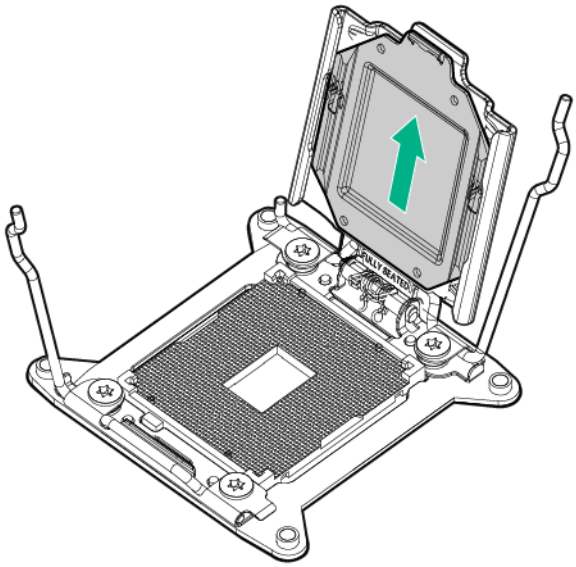

5. Install the processor. Verify that the processor is fully seated in the processor retaining bracket by visually inspecting the processor installation guides on either side of the processor. **THE PINS ON THE SYSTEM BOARD ARE VERY FRAGILE AND EASILY DAMAGED.**

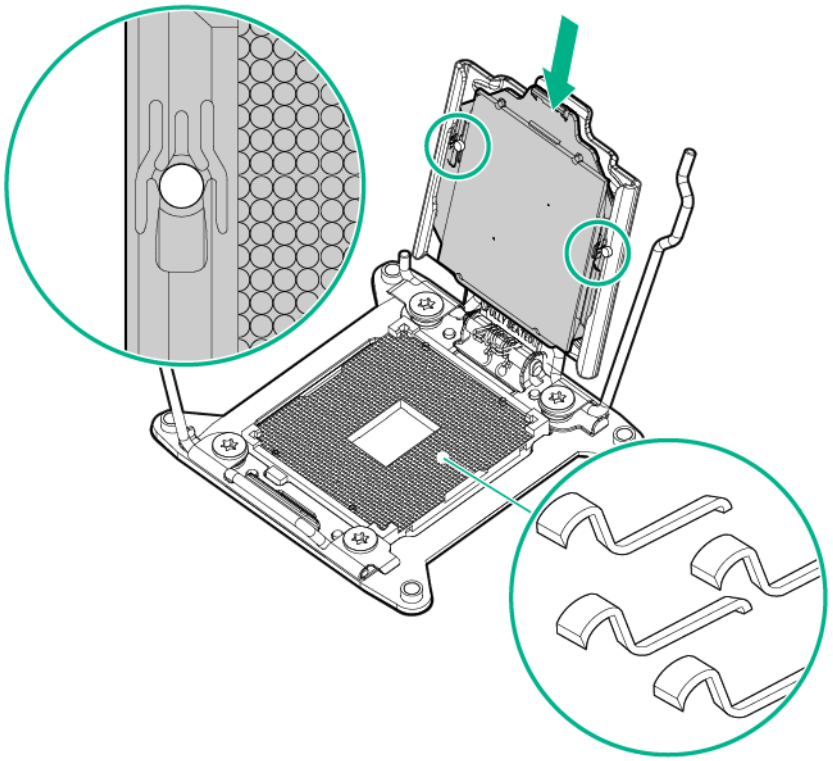

△ **CAUTION:** Do not press down on the processor. Pressing down on the processor may cause damage to the processor socket and the system board. Press only in the area indicated on the processor retaining bracket.

△ **CAUTION:** Close and hold down the processor cover socket while closing the processor locking levers. The levers should close without resistance. Forcing the levers closed can damage the processor and socket, requiring system board replacement.

6. Close the processor retaining bracket. When the processor is installed properly inside the processor retaining bracket, the processor retaining bracket clears the flange on the front of the socket.

7. Press and hold the processor retaining bracket in place, and then close each processor locking lever. Press only in the area indicated on the processor retaining bracket.

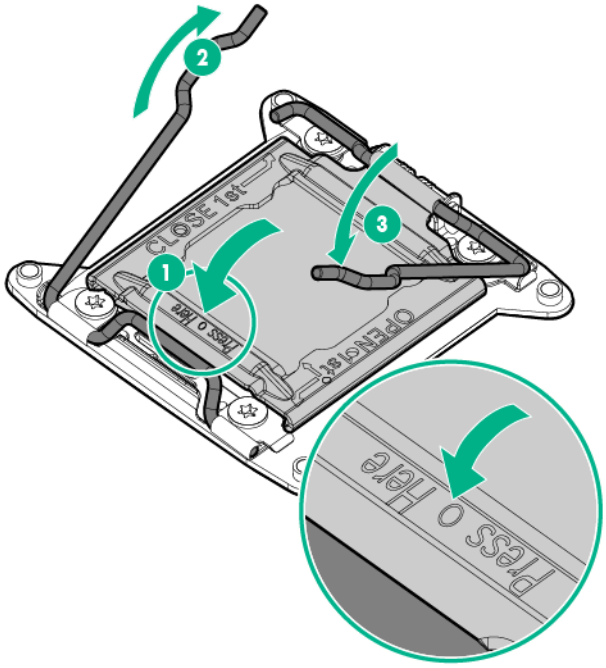

8. Install the processor socket cover on the failed system board.
9. Clean the old thermal grease from the heatsink and the top of the processor with the alcohol swab. Allow the alcohol to evaporate before continuing.
10. Apply all the grease to the top of the processor in the following pattern to ensure even distribution.

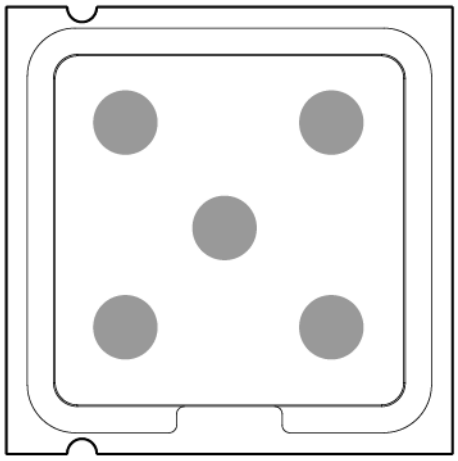

11. Install the heatsink:
    a. Position the heatsink on the processor backplate.
    b. Tighten one pair of diagonally opposite screws halfway, and then tighten the other pair of screws.

c. Finish the installation by completely tightening the screws in the same sequence.

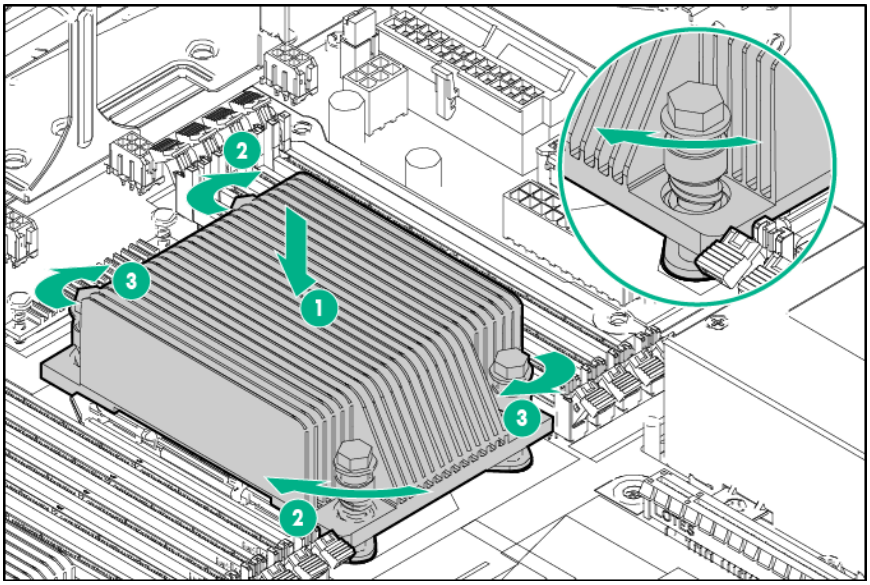

12. Install all components removed from the failed system board.
13. Connect all cables disconnected from the failed system board.
14. Install the fan cage.
15. Install the air baffle.
16. Install the PCI riser cages.
17. Install the access panel.
18. Do one of the following:
    - Slide the server into the rack.
    - Install the server into the rack.
19. Connect each power cord to the server.
20. Connect each power cord to the power source.
21. Press the Power On/Standby button.

    The server exits standby mode and applies full power to the system. The system power LED changes from amber to green.

IMPORTANT: Install all components with the same configuration that was used on the failed system board.

After you replace the system board, you must re-enter the server serial number and the product ID.

1. During the server startup sequence, press the **F9** key to access UEFI System Utilities.
2. Select the **System Configuration** > **BIOS/Platform Configuration (RBSU)** > **Advanced Options** > **Advanced System ROM Options** > **Serial Number**, and then press the **Enter** key.
3. Enter the serial number and press the **Enter** key. The following message appears:

   ```
   The serial number should only be modified by qualified service personnel.
   This value should always match the serial number located on the chassis.
   ```
4. Press the **Enter** key to clear the warning.
5. Enter the serial number and press the **Enter** key.
6. Select **Product ID**. The following warning appears:

   ```
   Warning: The Product ID should ONLY be modified by qualified service
   personnel. This value should always match the Product ID located on the
   chassis.
   ```

7. Enter the product ID and press the **Enter** key.
8. Press the **F10** key to confirm exiting System Utilities. The server automatically reboots.

HPE 550-W Power Supply (non-hot plug)

WARNING: To reduce the risk of personal injury from hot surfaces, allow the drives and the internal system components to cool before touching them.

CAUTION: To prevent damage to electrical components, take the appropriate anti-static precautions before beginning any installation, removal, or replacement procedure. Improper grounding can cause electrostatic discharge.

To remove the component:

1. Power down the server (on page 27).
2. Access the product rear panel (on page 30).
3. Release the power cord from the strain relief clip.

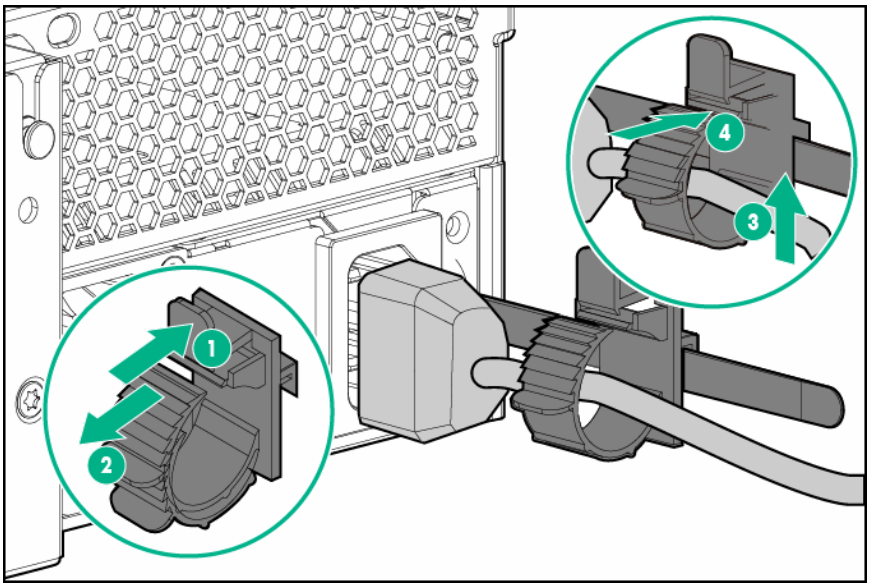

4. Remove all power:
   a. Disconnect the power cord from the power source.
   b. Disconnect the power cord from the server.
5. Remove the server from the rack (on page 30).
6. Remove the access panel ("Access panel" on page 37).
7. If installed, remove the secondary PCI riser cage ("Remove the PCI riser cages" on page 31).

8. Remove the Smart Storage Battery holder.

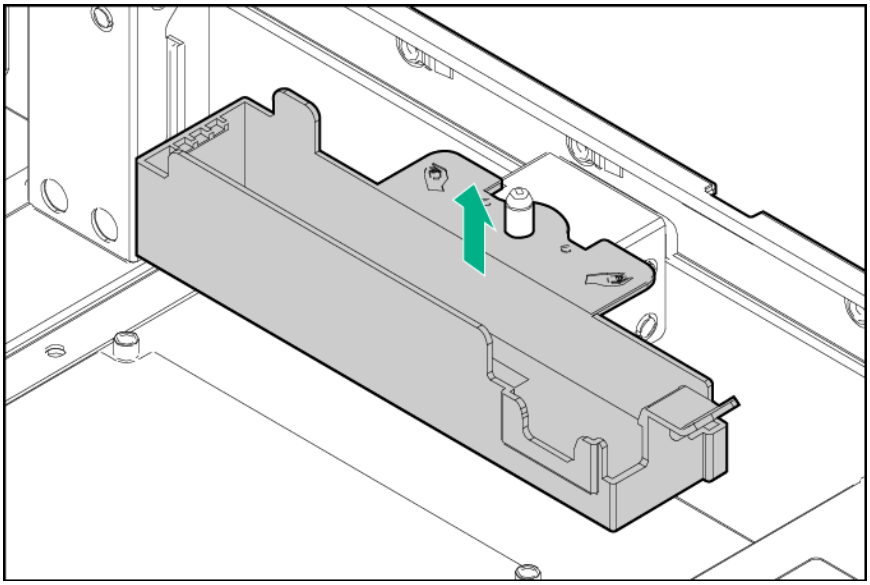

9. Disconnect all power supply cables from the system board and any associated component (drive backplane, GPU, etc.).
10. Remove the non-hot-plug power supply.

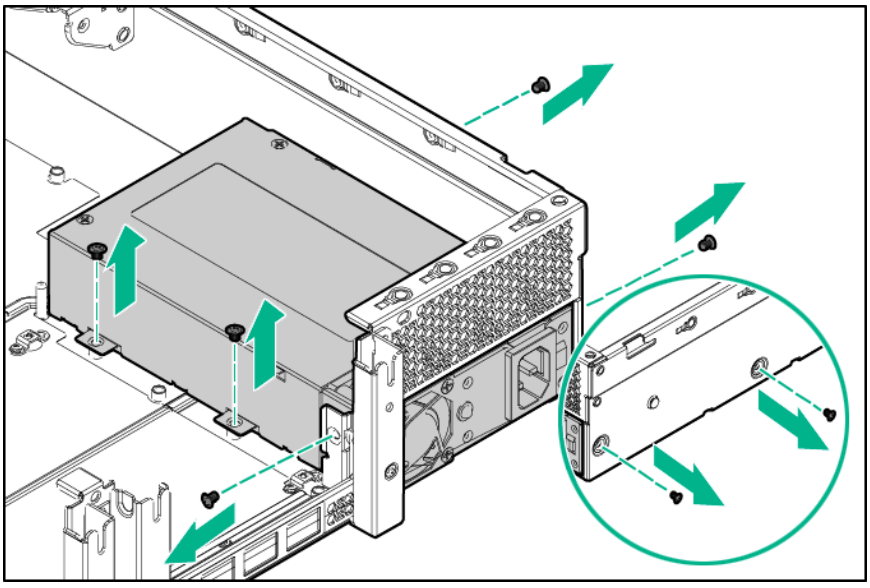

To replace the component, reverse the removal procedure.

Hot-plug power input module

To remove the component:

1. If the server is using a single hot-plug power input module only, power down the server (on page 27).
2. Access the product rear panel (on page 30).

3. Release the power cord from the hook-and-loop strap.

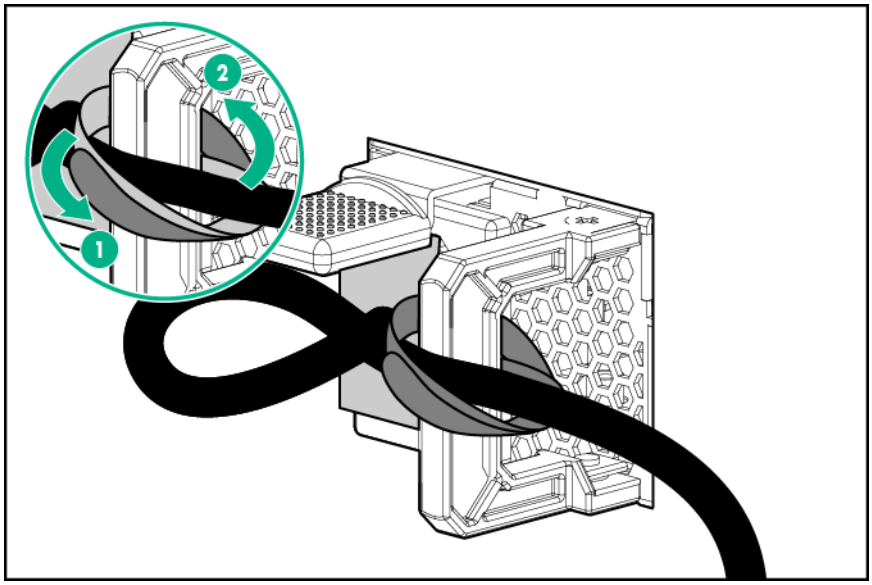

4. Disconnect the power cord from the power source.
5. Remove the power input module.

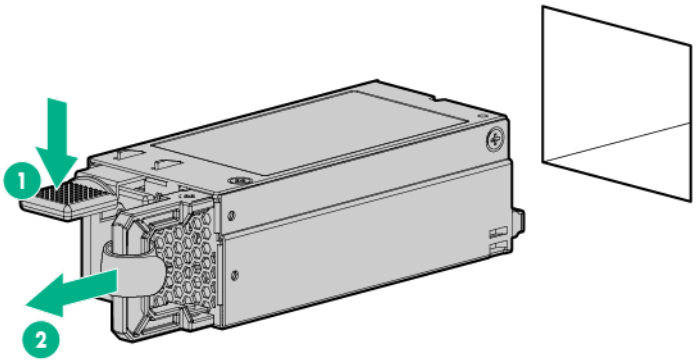

To replace the component, reverse the removal procedure.

RPS backplane

WARNING: To reduce the risk of personal injury from hot surfaces, allow the drives and the internal system components to cool before touching them.

CAUTION: To prevent damage to electrical components, take the appropriate anti-static precautions before beginning any installation, removal, or replacement procedure. Improper grounding can cause electrostatic discharge.

To remove the component:

1. Power down the server (on page 27).
2. Access the product rear panel (on page 30).
3. Remove all power:
   a. Disconnect each power cord from the power source.
   b. Disconnect each power cord from the server.

4. Remove all installed power input modules ("Hot-plug power input module" on page 82).
5. Remove the server from the rack (on page 30).
6. Place the server on a sturdy, level surface.
7. Remove the access panel ("Access panel" on page 37).
8. If installed, remove the secondary PCI riser cage ("Remove the PCI riser cages" on page 31).
9. Remove the Smart Storage Battery holder.

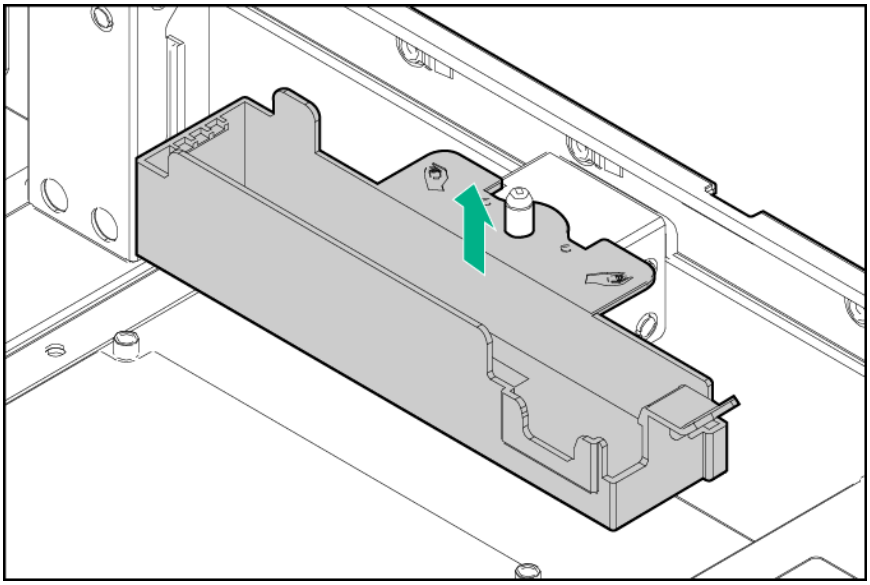

10. Disconnect the RPS backplane cables.
11. Release the RPS backplane cables from the cable clips.

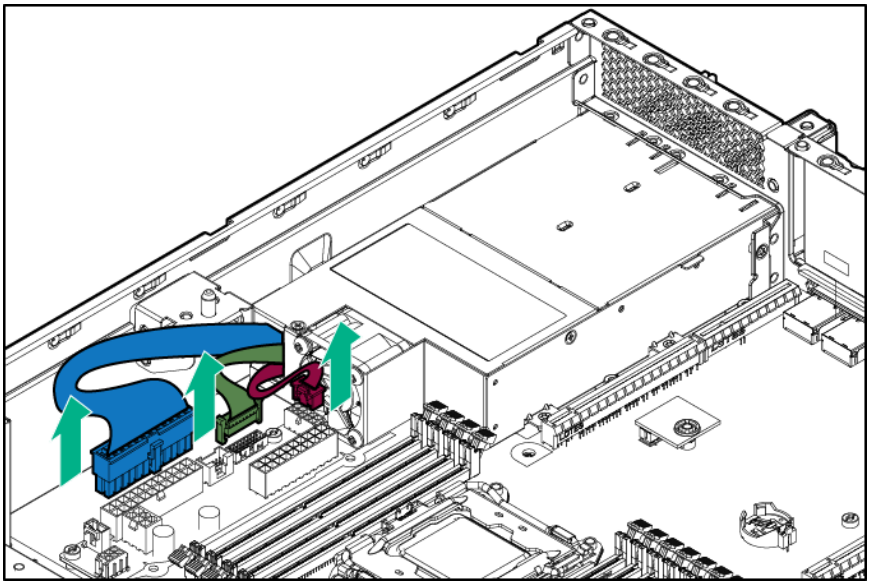

12. Remove the RPS backplane.

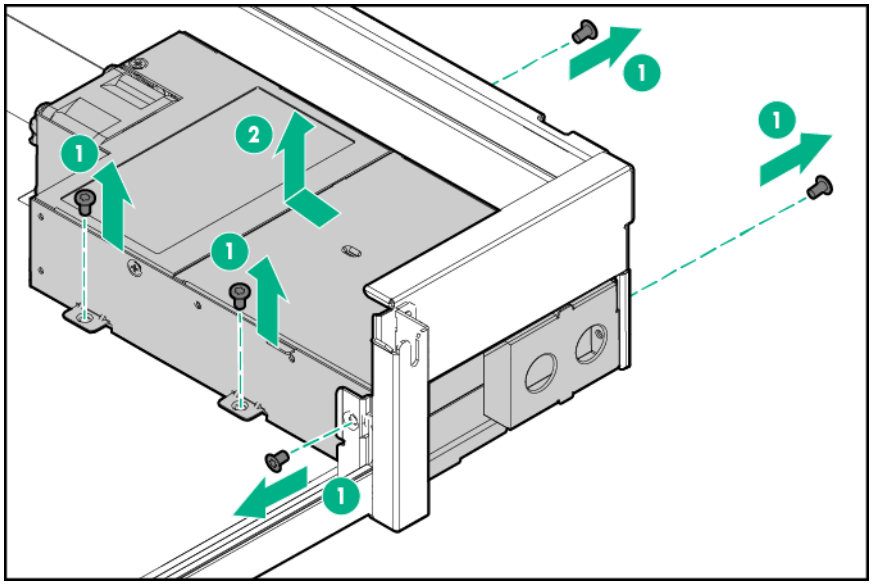

To replace the component, reverse the removal procedure.

HP Trusted Platform Module

The TPM is not a customer-removable part.

> △ **CAUTION:** Any attempt to remove an installed TPM from the system board breaks or disfigures the TPM security rivet. Upon locating a broken or disfigured rivet on an installed TPM, administrators should consider the system compromised and take appropriate measures to ensure the integrity of the system data.

If you suspect a TPM board failure, leave the TPM installed and remove the system board. Contact a Hewlett Packard Enterprise authorized service provider for a replacement system board and TPM board.

Troubleshooting

Troubleshooting resources

The *HPE ProLiant Gen9 Troubleshooting Guide, Volume I: Troubleshooting* provides procedures for resolving common problems and comprehensive courses of action for fault isolation and identification, issue resolution, and software maintenance on ProLiant servers and server blades. To view the guide, select a language:

- English (http://www.hpe.com/support/Gen9_TSG_en)
- French (http://www.hpe.com/support/Gen9_TSG_fr)
- Spanish (http://www.hpe.com/support/Gen9_TSG_es)
- German (http://www.hpe.com/support/Gen9_TSG_de)
- Japanese (http://www.hpe.com/support/Gen9_TSG_ja)
- Simplified Chinese (http://www.hpe.com/support/Gen9_TSG_zh_cn)

The *HPE ProLiant Gen9 Troubleshooting Guide, Volume II: Error Messages* provides a list of error messages and information to assist with interpreting and resolving error messages on ProLiant servers and server blades. To view the guide, select a language:

- English (http://www.hpe.com/support/Gen9_EMG_en)
- French (http://www.hpe.com/support/Gen9_EMG_fr)
- Spanish (http://www.hpe.com/support/Gen9_EMG_es)
- German (http://www.hpe.com/support/Gen9_EMG_de)
- Japanese (http://www.hpe.com/support/Gen9_EMG_ja)
- Simplified Chinese (http://www.hpe.com/support/Gen9_EMG_zh_cn)

Diagnostic tools

Product QuickSpecs

For more information about product features, specifications, options, configurations, and compatibility, see the product QuickSpecs on the Hewlett Packard Enterprise website (http://www.hpe.com/info/qs).

HPE iLO

The iLO 4 subsystem is a standard component of ProLiant servers that simplifies initial server setup, server health monitoring, power and thermal optimization, and remote server administration. The iLO 4 subsystem includes an intelligent microprocessor, secure memory, and a dedicated network interface. This design makes iLO 4 independent of the host server and its operating system.

iLO 4 enables and manages the Active Health System (on page 87) and also features Agentless Management. All key internal subsystems are monitored by iLO 4. If enabled, SNMP alerts are sent directly by iLO 4 regardless of the host operating system or even if no host operating system is installed.

Embedded remote support software is available on ProLiant Gen8 and later servers with iLO 4, regardless of the operating system software and without installing OS agents on the server.

Using iLO 4, you can do the following:

- Access a high-performance and secure Integrated Remote Console to the server from anywhere in the world if you have a network connection to the server.
- Use the shared .NET Integrated Remote Console to collaborate with up to four server administrators.
- Remotely mount high-performance Virtual Media devices to the server.
- Securely and remotely control the power state of the managed server.
- Implement true Agentless Management with SNMP alerts from iLO, regardless of the state of the host server.
- Download the Active Health System log.
- Register for Insight Remote Support.
- Use iLO Federation to manage multiple servers from one system running the iLO web interface.
- Use Virtual Power and Virtual Media from the GUI, the CLI, or the iLO scripting toolkit for many tasks, including the automation of deployment and provisioning.
- Control iLO by using a remote management tool.

For more information about iLo features, see the iLo documentation on the Hewlett Packard Enterprise website (http://www.hpe.com/info/ilo/docs).

The iLO 4 hardware and firmware features and functionality, such as NAND size and embedded user partition, vary depending on the server model. For a complete list of supported features and functionality, see the iLO 4 QuickSpecs on the Hewlett Packard Enterprise website (http://www.hpe.com/info/Quickspecs-iLO).

Active Health System

The HPE Active Health System provides the following features:

- Combined diagnostics tools/scanners
- Always on, continuous monitoring for increased stability and shorter downtimes
- Rich configuration history
- Health and service alerts
- Easy export and upload to Service and Support

The Active Health System monitors and records changes in the server hardware and system configuration. The Active Health System assists in diagnosing problems and delivering rapid resolution if server failures occur.

The Active Health System collects the following types of data:

- Server model
- Serial number
- Processor model and speed
- Storage capacity and speed
- Memory capacity and speed
- Firmware/BIOS

Active Health System does not collect information about Active Health System users' operations, finances, customers, employees, partners, or data center, such as IP addresses, host names, user names, and passwords. Active Health System does not parse or change operating system data from third-party error event log activities, such as content created or passed through by the operating system.

The data that is collected is managed according to the Hewlett Packard Enterprise Data Privacy policy. For more information see the Hewlett Packard Enterprise website (http://www.hpe.com/info/privacy).

The Active Health System, in conjunction with the system monitoring provided by Agentless Management or SNMP Pass-thru, provides continuous monitoring of hardware and configuration changes, system status, and service alerts for various server components.

The Agentless Management Service is available in the SPP, which can be downloaded from the Hewlett Packard Enterprise website (http://www.hpe.com/servers/spp/download). The Active Health System log can be downloaded manually from iLO 4 or HPE Intelligent Provisioning and sent to Hewlett Packard Enterprise.

For more information, see the following documents:

- *iLO User Guide* on the Hewlett Packard Enterprise website (http://www.hpe.com/info/enterprise/docs)
- *Intelligent Provisioning User Guide* on the Hewlett Packard Enterprise website (http://www.hpe.com/info/enterprise/docs)

HPE ProLiant Pre-boot Health Summary

If the server will not start up, you can use iLO to display diagnostic information on an external monitor. This feature is supported on servers that support external video and have a UID button or an SUV connector. When power is available to the server but the server is not powered on, iLO runs on auxiliary power and can take control of the server video adapter to display the HPE ProLiant Pre-boot Health Summary.

For additional information, see the following documents:

- *iLO 4 User Guide* — See the Hewlett Packard Enterprise website (http://www.hpe.com/info/ilo/docs).
- *ProLiant Gen9 Troubleshooting Guide, Volume I: Troubleshooting* — See "Troubleshooting Resources (on page 86)."

Integrated Management Log

The IML records hundreds of events and stores them in an easy-to-view form. The IML timestamps each event with 1-minute granularity.

You can view recorded events in the IML in several ways, including the following:

- From within HPE SIM
- From within UEFI System Utilities ("HPE UEFI System Utilities" on page 89)
- From within the Embedded UEFI shell
- From within operating system-specific IML viewers:
  - For Windows: IML Viewer
  - For Linux: IML Viewer Application
- From within the iLO 4 web interface
- From within Insight Diagnostics ("HPE Insight Diagnostics" on page 90)

HPE UEFI System Utilities

The HPE UEFI System Utilities is embedded in the system ROM. The UEFI System Utilities enable you to perform a wide range of configuration activities, including:

- Configuring system devices and installed options
- Enabling and disabling system features
- Displaying system information
- Selecting the primary boot controller
- Configuring memory options
- Selecting a language
- Launching other pre-boot environments such as the Embedded UEFI Shell and Intelligent Provisioning

For more information on the UEFI System Utilities, see the *UEFI System Utilities User Guide for HPE ProLiant Gen9 Servers* on the Hewlett Packard Enterprise website (http://www.hpe.com/info/ProLiantUEFI/docs).

Scan the QR code located at the bottom of the screen to access mobile-ready online help for the UEFI System Utilities and UEFI Shell. For on-screen help, press **F1**.

Using UEFI System Utilities

To use the UEFI System Utilities, use the following keys.

Action	Key
Access System Utilities	F9 during server POST
Navigate menus	Up and Down arrows
Select items	Enter
Save selections	F10
Access Help for a highlighted configuration option*	F1

*Scan the QR code on the screen to access online help for the UEFI System Utilities and UEFI Shell.

Default configuration settings are applied to the server at one of the following times:

- Upon the first system power-up
- After defaults have been restored

Default configuration settings are sufficient for typical server operations; however, you can modify configuration settings as needed. The system prompts you for access to the System Utilities each time the system is powered up.

Embedded Diagnostics option

The system BIOS in all ProLiant Gen9 servers includes an Embedded Diagnostics option in the ROM. The Embedded Diagnostics option can run comprehensive diagnostics of the server hardware, including processors, memory, drives, and other server components.

For more information on the Embedded Diagnostics option, see the *UEFI System Utilities User Guide for ProLiant Gen9 Servers* on the Hewlett Packard Enterprise website (http://www.hpe.com/info/ProLiantUEFI/docs).

Re-entering the server serial number and product ID

After you replace the system board, you must re-enter the server serial number and the product ID.

1. During the server startup sequence, press the **F9** key to access UEFI System Utilities.
2. Select the **System Configuration** > **BIOS/Platform Configuration (RBSU)** > **Advanced Options** > **Advanced System ROM Options** > **Serial Number**, and then press the **Enter** key.
3. Enter the serial number and press the **Enter** key. The following message appears:

   ```
   The serial number should only be modified by qualified service personnel.
   This value should always match the serial number located on the chassis.
   ```
4. Press the **Enter** key to clear the warning.
5. Enter the serial number and press the **Enter** key.
6. Select **Product ID**. The following warning appears:

   ```
   Warning: The Product ID should ONLY be modified by qualified service
   personnel. This value should always match the Product ID located on the
   chassis.
   ```
7. Enter the product ID and press the **Enter** key.
8. Press the **F10** key to confirm exiting System Utilities. The server automatically reboots.

HPE Insight Diagnostics

The Insight Diagnostics is a proactive server management tool, available in both offline and online versions, that provides diagnostics and troubleshooting capabilities to assist IT administrators who verify server installations, troubleshoot problems, and perform repair validation.

The Insight Diagnostics Offline Edition performs various in-depth system and component testing while the OS is not running. To run this utility, boot the server using Intelligent Provisioning.

The Insight Diagnostics Online Edition is a web-based application that captures system configuration and other related data needed for effective server management. Available in Microsoft Windows and Linux versions, the utility helps to ensure proper system operation.

For more information or to download the utility, see the Hewlett Packard Enterprise website (http://www.hpe.com/servers/diags).The Insight Diagnostics Online Edition is also available in the SPP.

HPE Insight Diagnostics survey functionality

HPE Insight Diagnostics (on page 90) provides survey functionality that gathers critical hardware and software information on ProLiant servers.

This functionality supports operating systems that are supported by the server. For operating systems supported by the server, see the Hewlett Packard Enterprise website (http://www.hpe.com/info/supportos).

If a significant change occurs between data-gathering intervals, the survey function marks the previous information and overwrites the survey data files to reflect the latest changes in the configuration.

Survey functionality is installed with every Intelligent Provisioning-assisted Insight Diagnostics installation, or it can be installed through the SPP.

HPE Insight Remote Support

Hewlett Packard Enterprise strongly recommends that you register your device for remote support to enable enhanced delivery of your Hewlett Packard Enterprise warranty, HP Care Pack Service, or Hewlett Packard Enterprise contractual support agreement. Insight Remote Support supplements your monitoring continuously to ensure maximum system availability by providing intelligent event diagnosis, and automatic, secure submission of hardware event notifications to Hewlett Packard Enterprise, which will initiate a fast and accurate resolution, based on your product's service level. Notifications can be sent to your authorized Hewlett Packard Enterprise Channel Partner for onsite service, if configured and available in your country.

For more information, see *Insight Remote Support and Insight Online Setup Guide for ProLiant Servers and BladeSystem c-Class Enclosures* on the Hewlett Packard Enterprise website (http://www.hpe.com/info/insightremotesupport/docs). Insight Remote Support is available as part of Warranty, HP Care Pack Service, or contractual support agreement.

USB support

Hewlett Packard Enterprise servers support both USB 2.0 ports and USB 3.0 ports. Both types of ports support installing all types of USB devices (USB 1.0, USB 2.0, and USB 3.0), but may run at lower speeds in specific situations:

- USB 3.0 capable devices operate at USB 2.0 speeds when installed in a USB 2.0 port.
- When the server is configured for UEFI Boot Mode, Hewlett Packard Enterprise provides legacy USB support in the pre-boot environment prior to the operating system loading for USB 1.0, USB 2.0 , and USB 3.0 speeds.
- When the server is configured for Legacy BIOS Boot Mode, Hewlett Packard Enterprise provides legacy USB support in the pre-boot environment prior to the operating system loading for USB 1.0 and USB 2.0 speeds. While USB 3.0 ports can be used with all devices in Legacy BIOS Boot Mode, they are not available at USB 3.0 speeds in the pre-boot environment. Standard USB support (USB support from within the operating system) is provided by the OS through the appropriate USB device drivers. Support for USB 3.0 varies by operating system.

For maximum compatibility of USB 3.0 devices with all operating systems, Hewlett Packard Enterprise provides a configuration setting for USB 3.0 Mode. Auto is the default setting. This setting impacts USB 3.0 devices when connected to USB 3.0 ports in the following manner:

- **Auto (default)**—If configured in Auto Mode, USB 3.0 capable devices operate at USB 2.0 speeds in the pre-boot environment and during boot. When a USB 3.0 capable OS USB driver loads, USB 3.0 devices transition to USB 3.0 speeds. This mode provides compatibility with operating systems that do not support USB 3.0 while still allowing USB 3.0 devices to operate at USB 3.0 speeds with state-of-the art operating systems.

- **Enabled**—If Enabled, USB 3.0 capable devices operate at USB 3.0 speeds at all times (including the pre-boot environment) when in UEFI Boot Mode. This mode should not be used with operating systems that do not support USB 3.0. If operating in Legacy Boot BIOS Mode, the USB 3.0 ports cannot function in the pre-boot environment and are not bootable.
- **Disabled**—If configured for Disabled, USB 3.0 capable devices function at USB 2.0 speeds at all times.

The pre-OS behavior of the USB ports is configurable in System Utilities, so that the user can change the default operation of the USB ports. For more information, see the *UEFI System Utilities User Guide for ProLiant Gen9 Servers* on the Hewlett Packard Enterprise website (http://www.hpe.com/info/ProLiantUEFI/docs).

External USB functionality

Hewlett Packard Enterprise provides external USB support to enable local connection of USB devices for server administration, configuration, and diagnostic procedures.

For additional security, external USB functionality can be disabled through USB options in UEFI System Utilities.

HPE Smart Storage Administrator

The HPE SSA is a configuration and management tool for Smart Array controllers. Starting with ProLiant Gen8 servers, HPE SSA replaces ACU with an enhanced GUI and additional configuration features.

The HPE SSA exists in three interface formats: the HPE SSA GUI, the HPE SSA CLI, and HPE SSA Scripting. Although all formats provide support for configuration tasks, some of the advanced tasks are available in only one format.

Some HPE SSA features include the following:

- Supports online array capacity expansion, logical drive extension, assignment of online spares, and RAID or stripe size migration
- Suggests the optimal configuration for an unconfigured system
- Provides diagnostic and SmartSSD Wear Gauge functionality on the Diagnostics tab
- For supported controllers, provides access to additional features.

For more information about HPE SSA, see the Hewlett Packard Enterprise website (http://www.hpe.com/info/hpessa).

Automatic Server Recovery

ASR is a feature that causes the system to restart when a catastrophic operating system error occurs, such as a blue screen, ABEND (does not apply to HPE ProLiant DL980 Servers), or panic. A system fail-safe timer, the ASR timer, starts when the System Management driver, also known as the Health Driver, is loaded. When the operating system is functioning properly, the system periodically resets the timer. However, when the operating system fails, the timer expires and restarts the server.

ASR increases server availability by restarting the server within a specified time after a system hang. At the same time, the SIM console notifies you by sending a message to a designated pager number that ASR has restarted the system. You can disable ASR from the System Management Homepage or through RBSU.

Component identification

Front panel components

- 4-bay LFF non-hot-plug drive model

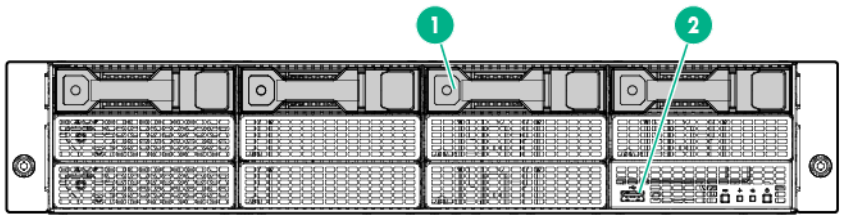

Item	Description
1	LFF non-hot-plug drives
2	USB 2.0 connector

- 8-bay LFF hot-plug drive model

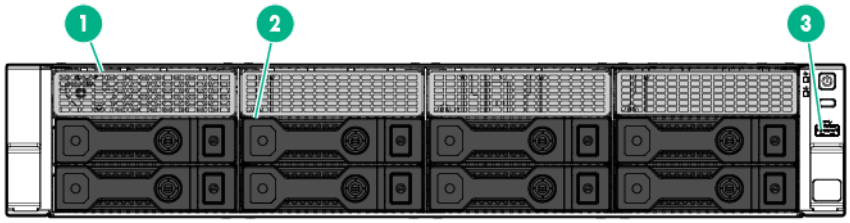

Item	Description
1	Box 1 LFF hot-plug drives
2	Box 2 LFF hot-plug drives
3	USB 3.0 connector

- 8-bay SFF hot-plug drive model

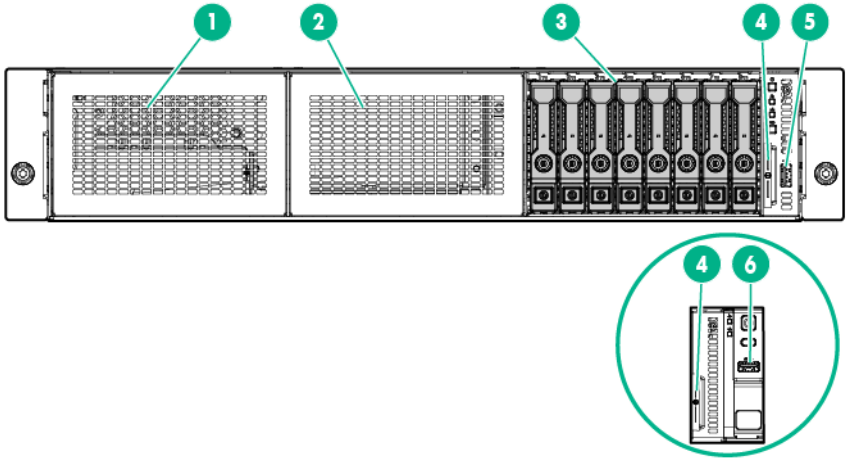

Item	Description
1	HPE Universal Media Bay (box 1, for the optical drive cage option)
2	8-bay SFF drive cage bay (box 2, for the second 8-bay SFF drive cage option)
3	Box 3 SFF hot-plug drives
4	Serial label pull tab
5	USB 2.0 connector (in servers using thumbscrew rack ears)
6	USB 3.0 connector (in servers using quick-release latch rack ears)

Serial label pull tab information

The vertically oriented serial label pull tab in the SFF chassis is double-sided. The following server labels are attached to this pull tab:

- Left side—Server serial number label and the customer asset tag label
- Right side—Default iLO account information label and the QR code label

  Use your mobile device to scan the QR code label to display the server mobile product page (http://www.hpe.com/qref/dl180gen9). This page contains links to server setup information, spare part numbers, QuickSpecs, troubleshooting resources, and other useful product links.

In the LFF chassis, these server labels are attached on the front edge of the access panel instead.

Front panel LEDs and buttons

- Front panel LEDs and buttons in an LFF chassis with thumbscrew rack ears

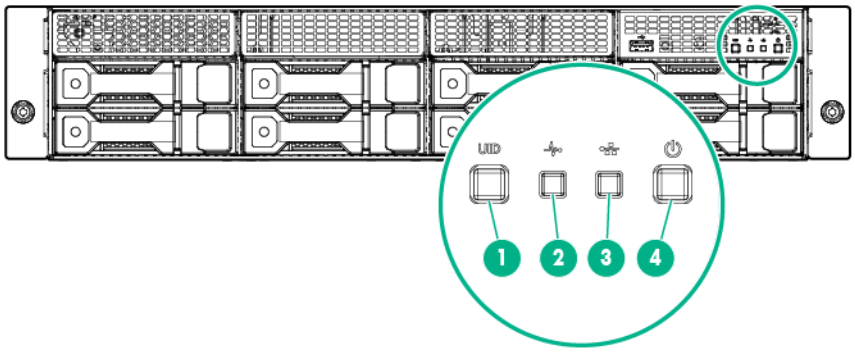

- Front panel LEDs and buttons in an LFF chassis with quick-release latch rack ears

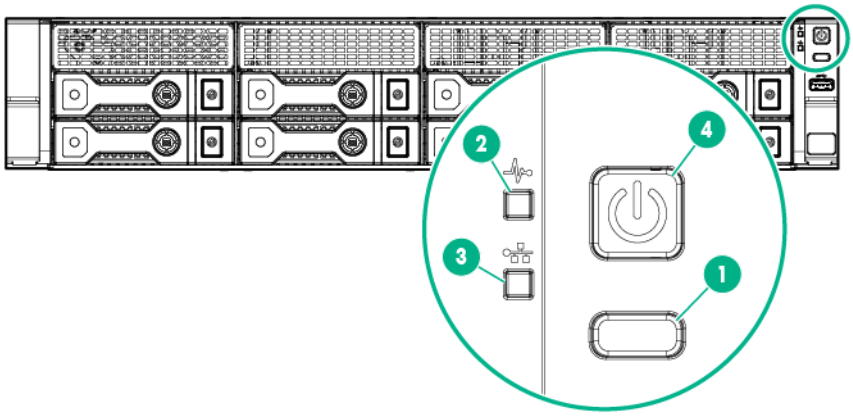

- Front panel LEDs and buttons in an SFF chassis with thumbscrew rack ears

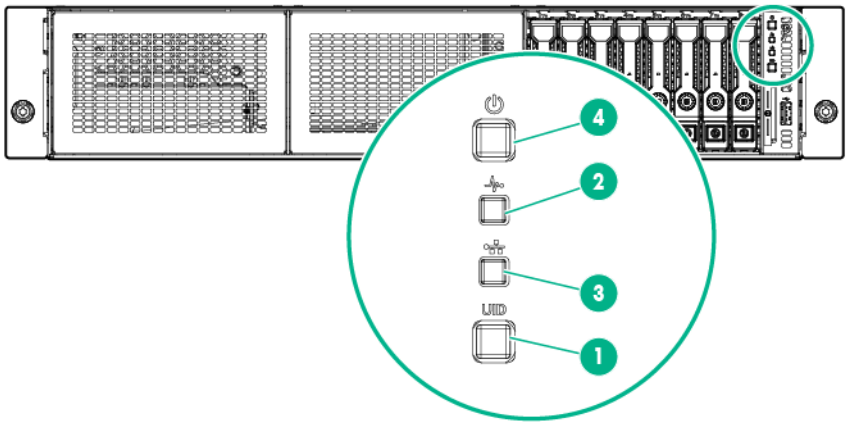

- Front panel LEDs and buttons in an SFF chassis with quick-release latch rack ears

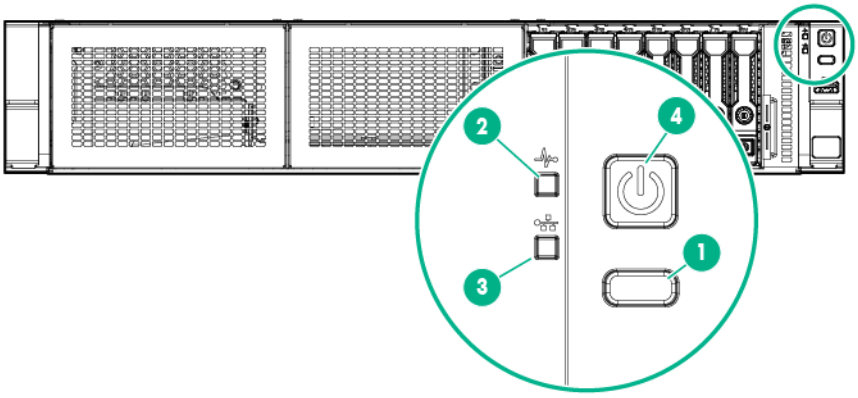

Item	Description	Status
1	UID button/LED*	Solid blue = Activated Flashing blue: • 1 Hz/cycle per sec = Remote management or firmware upgrade in progress • 4 Hz/cycle per sec = iLO manual reboot sequence initiated • 8 Hz/cycle per sec = iLO manual reboot sequence in progress Off = Deactivated
2	Health LED*	Solid green = Normal Flashing green (1 Hz/cycle per sec) = iLO is rebooting Flashing amber = System degraded** Flashing red (1 Hz/cycle per sec) = System critical**
3	NIC status LED*	Solid green = Link to network Flashing green (1 Hz/cycle per sec) = Network active Off = No network activity
4	Power On/Standby button and system power LED*	Solid green = System on Flashing green (1 Hz/cycle per sec) = Performing power on sequence Solid amber = System in standby Off = No power present†

* When all four LEDs described in this table flash simultaneously, a power fault has occurred. For more information, see "Front panel LED power fault codes (on page 96)."
** If the health LED indicates a degraded or critical state, review the system IML or use iLO to review the system health status.
† Facility power is not present, power cord is not attached, no power supplies are installed, power supply failure has occurred, or the front I/O cable is disconnected.

Front panel LED power fault codes

The following table provides a list of power fault codes, and the subsystems that are affected. Not all power faults are used by all servers.

Subsystem	Front panel LED behavior
System board	1 flash
Processor	2 flashes
Memory	3 flashes
Riser board PCIe slots	4 flashes
FlexibleLOM	5 flashes
Removable HPE Flexible Smart Array controller/Smart SAS HBA controller	6 flashes
System board PCIe slots	7 flashes
Power backplane or storage backplane	8 flashes
Power supply	9 flashes

For more information, see "Front panel LEDs and buttons (on page 94)."

Rear panel components

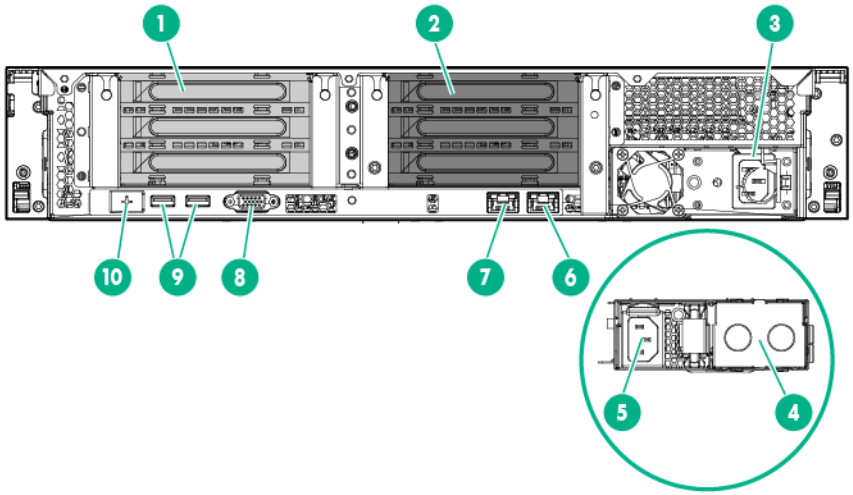

Item	Description
1	PCIe3 riser slots 1-3 (primary, associated with processor 1)
2	PCIe3 riser slots 4-6 (secondary, associated with processor 2)
3	Non-hot plug power supply
4	Hot-plug power supply bay 2
5	Hot-plug power supply 1
6	NIC connector 2
7	NIC 1/shared iLO connector
8	Video connector
9	USB 3.0 connectors
10	Dedicated iLO management connector (optional)

Rear panel LEDs

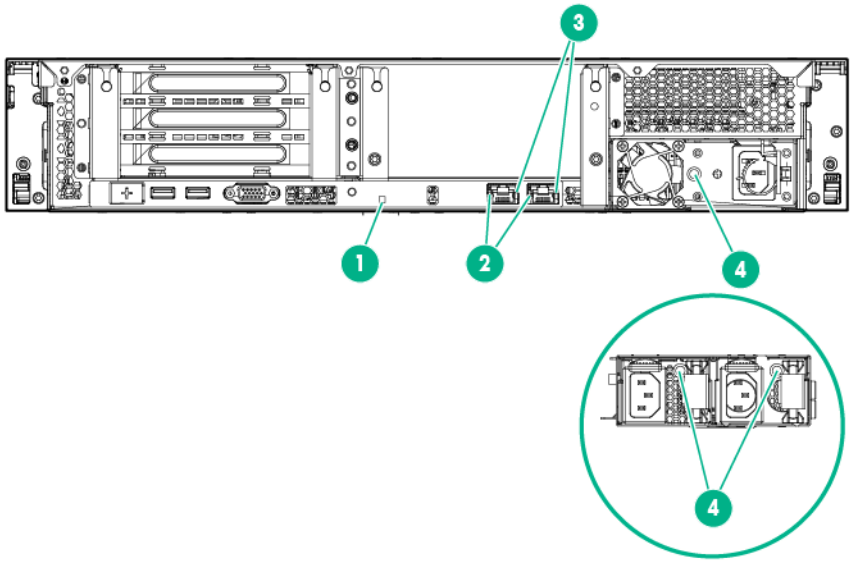

Item	Description	Status
1	UID LED	Solid blue = Activated Flashing blue: • 1 Hz/cycle per sec = Remote management or firmware upgrade in progress • 4 Hz/cycle per sec = iLO manual reboot sequence initiated • 8 Hz/cycle per sec = iLO manual reboot sequence in progress Off = Deactivated
2	NIC link LED	Green = Network link Off = No network link
3	NIC activity LED	Solid green = Link to network Flashing green = Network active Off = No network activity
4	Power supply LED	Solid green = Normal Off = One or more of the following conditions exists: • Power is unavailable • Power supply failed • Power supply is in standby mode • Power supply error

PCIe riser board slot definitions

The server ships with a primary PCI riser cage installed and a secondary PCI riser cage blank. A second processor is required to support installation in the secondary PCIe riser location.

- Two-slot PCI riser cage assembly: Install in either the primary or secondary PCIe riser board connector.

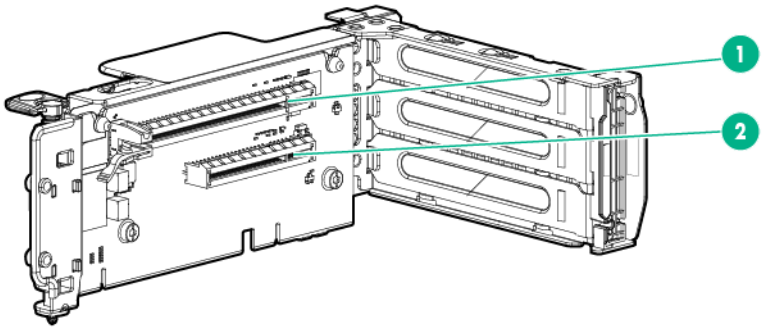

Item	Form factor	Slot description
1	Full-height, full-length	PCIe3 x16 (16, 8, 4, 1)
2	Full-height, half-length	PCIe3 x8 (8, 4, 1)

- Three-slot PCI riser cage assembly: Install in either the primary or secondary PCIe riser board connector.

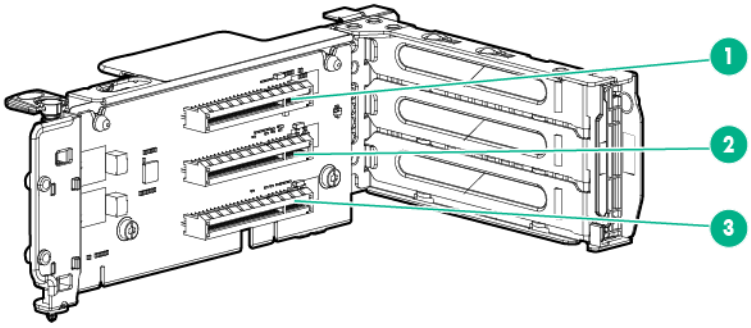

Item	Form factor	Slot description
1	Full-height, full-length	PCIe3 x8 (8, 4, 1)
2	Full-height, half-length	PCIe3 x8 (8, 4, 1)
3	Full-height, half-length	PCIe3 x8 (8, 4, 1)

- FlexibleLOM riser cage assembly: Install in the secondary PCIe riser board connector.

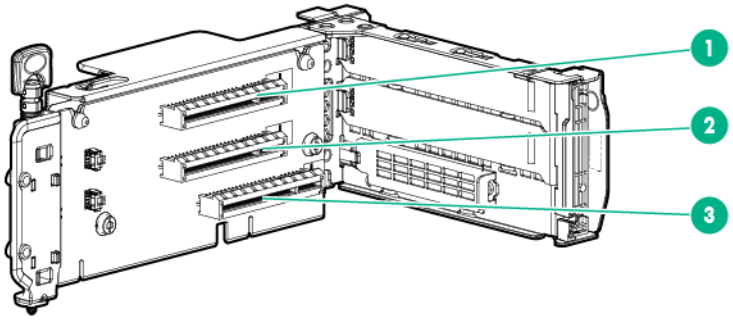

Item	Form factor	Slot description
1	Full-height, full-length	PCIe3 x8 (8, 4, 1)
2	Full-height, half-length	PCIe3 x8 (8, 4, 1)
3	FlexibleLOM	PCIe3 x8

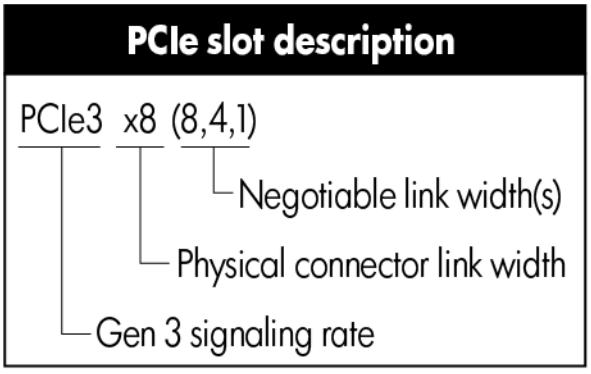

System board components

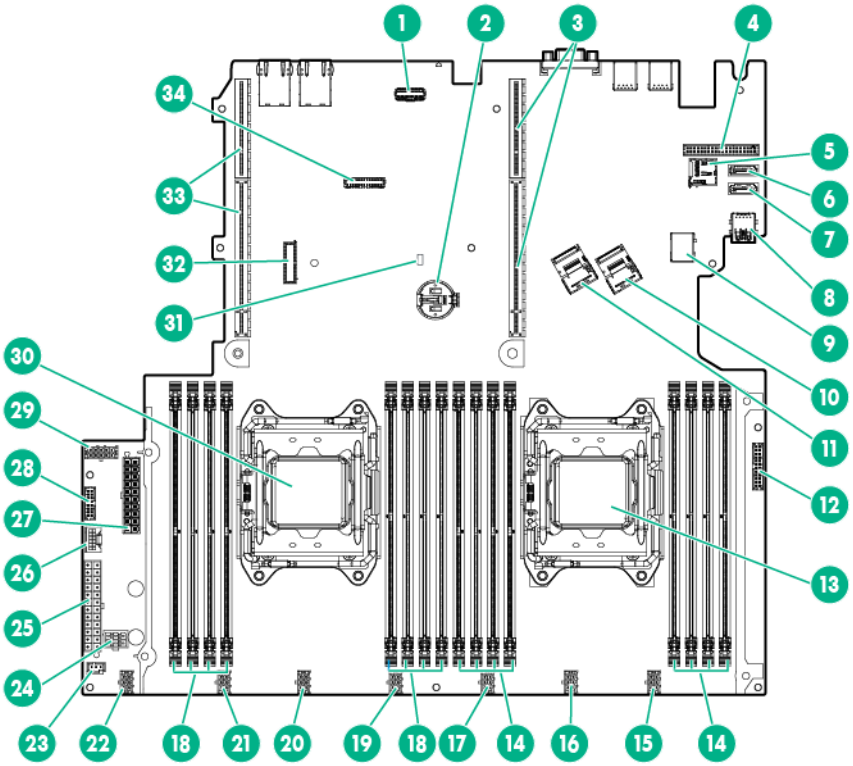

Item	Description
1	FlexibleLOM sideband signal connector
2	System battery
3	Primary PCIe riser board connectors
4	Dedicated iLO module connector
5	microSD card slot
6	SATA connector 5 (for M.2 SSD 2)
7	SATA connector 4 (for M.2 SSD 1 or optical drive)
8	Internal USB 3.0 connector (for USB flash devices)
9	Front USB 3.0 connector (for the USB 3.0 connector on the right quick-release latch rack ear)
10	Mini-SAS connector 1
11	Mini-SAS connector 2
12	Front I/O connector
13	Processor 1
14	Processor 1 DIMM slots
15	Fan connector 5
16	Fan connector 4
17	Reserved
18	Processor 2 DIMM slots
19	Fan connector 3
20	Fan connector 2
21	Fan connector 1
22	Reserved
23	12-bay LFF drive identification signal connector

Item	Description
24	GPU power connector
25	24-pin power supply connector
26	HPE Smart Storage Battery connector
27	20-pin drive power connector
28	16-pin power supply sideband signal connector
29	10-pin RPS connector
30	Processor 2
31	NMI header
32	TPM connector
33	Secondary PCIe riser board connectors
34	System maintenance switch

DIMM slot locations

DIMM slots are numbered sequentially (1 through 8) for each processor. The supported AMP modes use the letter assignments for population guidelines.

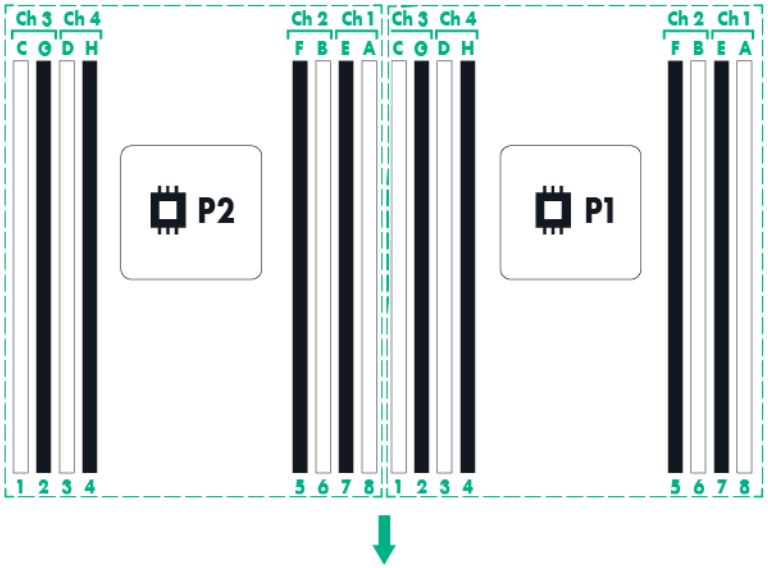

The arrow points to the front of the server.

System maintenance switch

Position	Default	Function
S1	Off	Off = iLO 4 security is enabled. On = iLO 4 security is disabled.
S2	Off	Off = System configuration can be changed. On = System configuration is locked.
S3	Off	Reserved
S4	Off	Reserved
S5	Off	Off = Power-on password is enabled. On = Power-on password is disabled.
S6	Off	Off = No function On = ROM reads system configuration as invalid.

Position	Default	Function
S7	Off	Off = Set default boot mode to UEFI. On = Set default boot mode to legacy.
S8	—	Reserved
S9	—	Reserved
S10	—	Reserved
S11	—	Reserved
S12	—	Reserved

To access the redundant ROM, set S1, S5, and S6 to on.

When system maintenance switch S6 is set to the On position, the system is prepared to erase all system configuration settings from both CMOS and NVRAM.

IMPORTANT: Before using the S7 switch to change to Legacy BIOS Boot Mode, be sure the HPE Dynamic Smart Array B140i Controller is disabled. Do not use the B140i controller when the server is in Legacy BIOS Boot Mode.

NMI functionality

An NMI crash dump creates a crash dump log before resetting a system which is not responding.

Crash dump log analysis is an essential part of diagnosing reliability problems, such as failures of operating systems, device drivers, and applications. Many crashes freeze a system, and the only available action for administrators is to restart the system. Resetting the system erases any information which could support problem analysis, but the NMI feature preserves that information by performing a memory dump before a system reset.

To force the system to invoke the NMI handler and generate a crash dump log, do one of the following:

- Use the iLO Virtual NMI feature.
- Short the NMI header.

For more information, see the Hewlett Packard Enterprise website (http://www.hpe.com/support/NMI).

Drive numbering

The following images show the drive numbering for each of the supported drive configurations. For drive box numbering information, see "Front panel components (on page 93)."

- 4-bay LFF non-hot-plug drive model

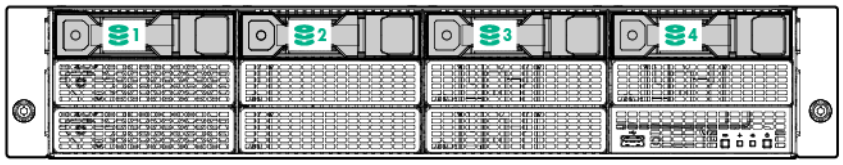

- 8-bay LFF hot-plug drive model

- 12-bay LFF hot-plug drive model

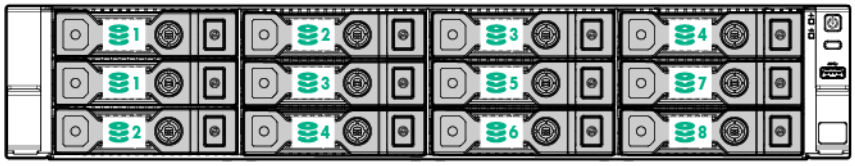

- 8-bay SFF hot-plug drive model

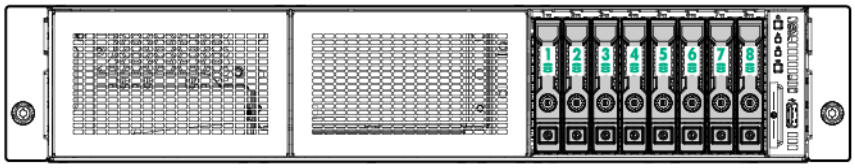

- 16-bay SFF hot-plug drive model

HPE SmartDrive LED definitions

HPE SmartDrives are the latest Hewlett Packard Enterprise drive technology, and they are supported beginning with ProLiant Gen8 servers and server blades. The SmartDrive is not supported on earlier generation servers and server blades. Identify a SmartDrive by its carrier, shown in the following illustration.

When a drive is configured as a part of an array and connected to a powered-up controller, the drive LEDs indicate the condition of the drive.

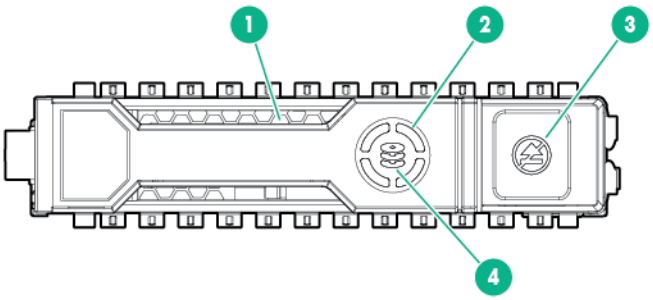

Item	LED	Status	Definition
1	Locate	Solid blue	The drive is being identified by a host application.
		Flashing blue	The drive carrier firmware is being updated or requires an update.
2	Activity ring	Rotating green	Drive activity
		Off	No drive activity
3	Do not remove	Solid white	Do not remove the drive. Removing the drive causes one or more of the logical drives to fail.
		Off	Removing the drive does not cause a logical drive to fail.
4	Drive status	Solid green	The drive is a member of one or more logical drives.

Item	LED	Status	Definition
		Flashing green	The drive is rebuilding or performing a RAID migration, strip size migration, capacity expansion, or logical drive extension, or is erasing.
		Flashing amber/green	The drive is a member of one or more logical drives and predicts the drive will fail.
		Flashing amber	The drive is not configured and predicts the drive will fail.
		Solid amber	The drive has failed.
		Off	The drive is not configured by a RAID controller.

The blue Locate LED is behind the release lever and is visible when illuminated.

IMPORTANT: The Dynamic Smart Array B140i Controller is only available in UEFI Boot Mode. It cannot be enabled in Legacy BIOS Boot Mode. If the B140i controller is disabled, drives connected to the system board Mini-SAS connectors operate in AHCI or Legacy mode. Under this condition:

- The drives cannot be a part of a hardware RAID or a logical drive.
- The Locate, Drive status, and Do not remove LEDs of the affected drives are disabled.

Use BIOS/Platform Configuration (RBSU) in the UEFI System Utilities ("HPE UEFI System Utilities" on page 89) to enable or disable the B140i controller (System Configuration → BIOS/Platform Configuration (RBSU) → System Options → SATA Controller Options → Embedded SATA Configuration).

Fan locations

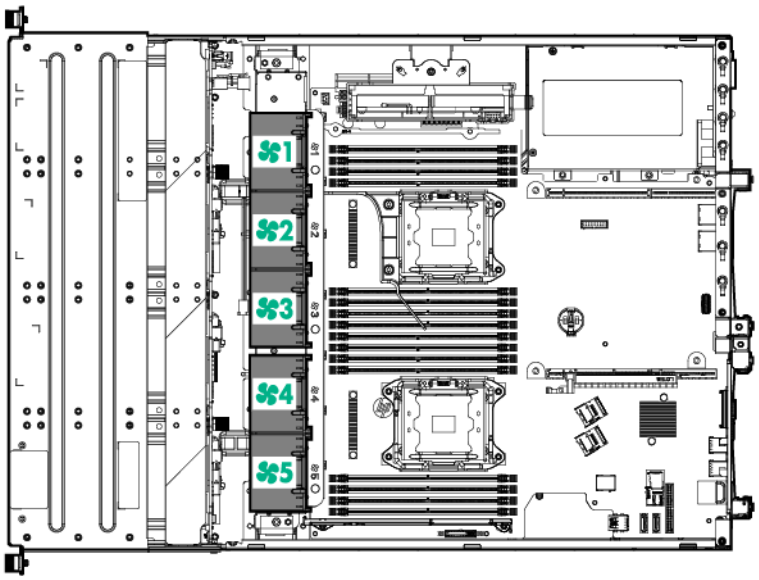

Cabling

Cabling overview

This section provides guidelines that help you make informed decisions about cabling the server and hardware options to optimize performance.

For information on cabling peripheral components, refer to the white paper on high-density deployment at the Hewlett Packard Enterprise website (http://www.hpe.com/products/servers/platforms).

△ **CAUTION:** When routing cables, always be sure that the cables are not in a position where they can be pinched or crimped.

Storage cabling

The storage cabling illustrations in this section show both the drive data and power cables.

The LFF and SFF drive models each has their own preinstalled 20-pin multi-output drive power cable.

The LFF drive power cable has the following connections:

- Common end connector—System board
- BP1 cable connector—4-bay LFF backplane
- BP2 cable connector—8-bay LFF backplane

The SFF drive power cable has the following connections:

- Common end connector—System board
- BP3 cable connector—8-bay SFF backplane in box 3
- BP2 cable connector—8-bay SFF backplane in box 2 (16-bay SFF drive configuration)
- ODD cable connector—Power connector in the SATA optical drive cable (if an optical drive is installed)

4-bay LFF non-hot-plug SATA drive cabling

Item	Description
1	Drive power cable
2	Mini-SAS cable

8-bay LFF non-hot-plug SATA drive cabling

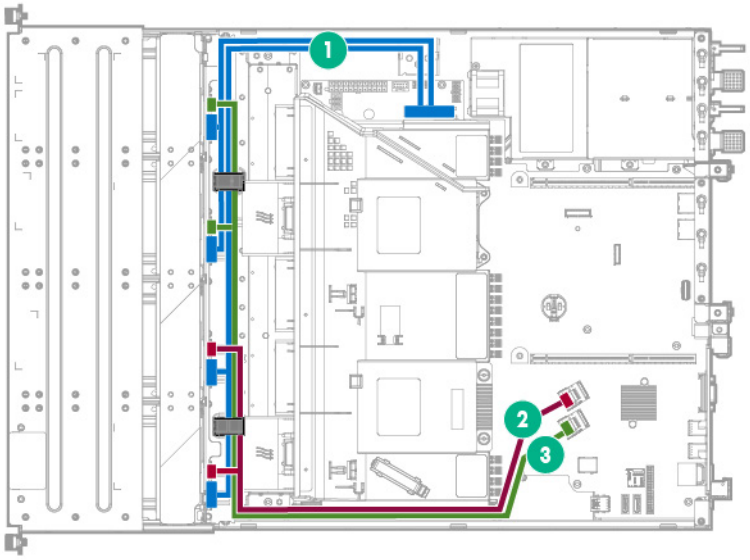

Item	Description
1	Drive power cable
2	Mini-SAS cable 2
3	Mini-SAS cable 1

8-bay LFF hot-plug SATA drive cabling

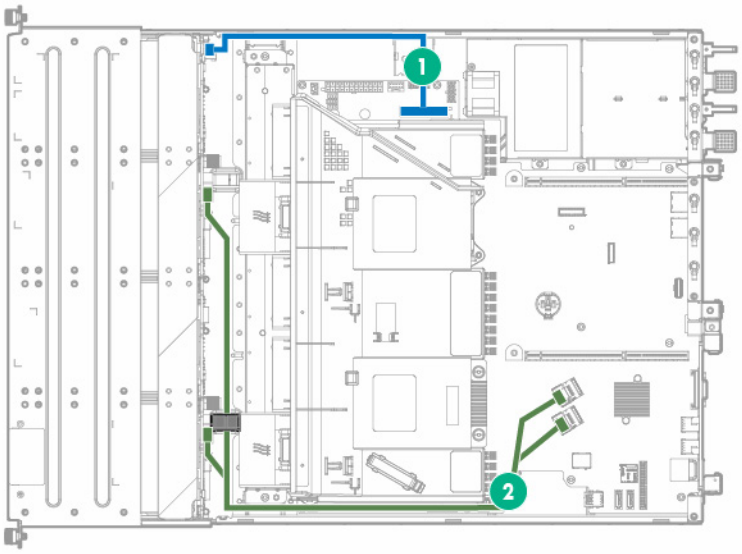

Item	Description
1	Drive power cable
2	Mini-SAS X-cable

8-bay LFF hot-plug SAS/SATA drive cabling

- Drives connected to an HBA option

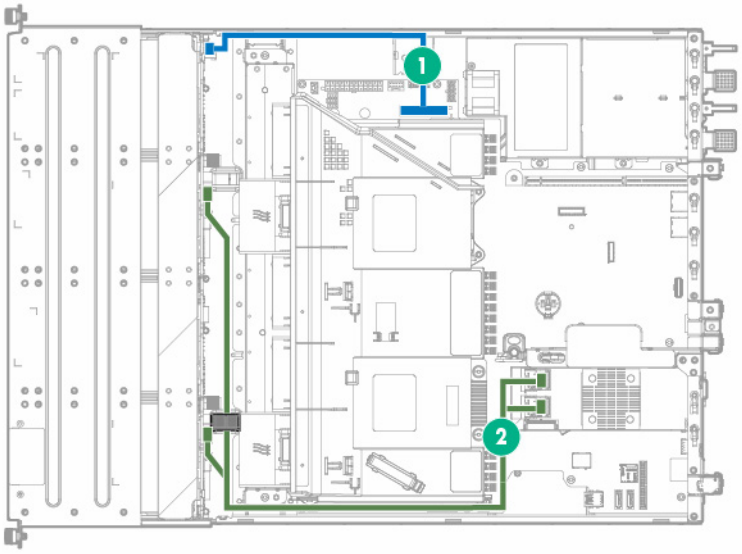

Item	Description
1	Drive power cable
2	Mini-SAS X-cable

- Drives connected to an HPE Smart Array Controller option

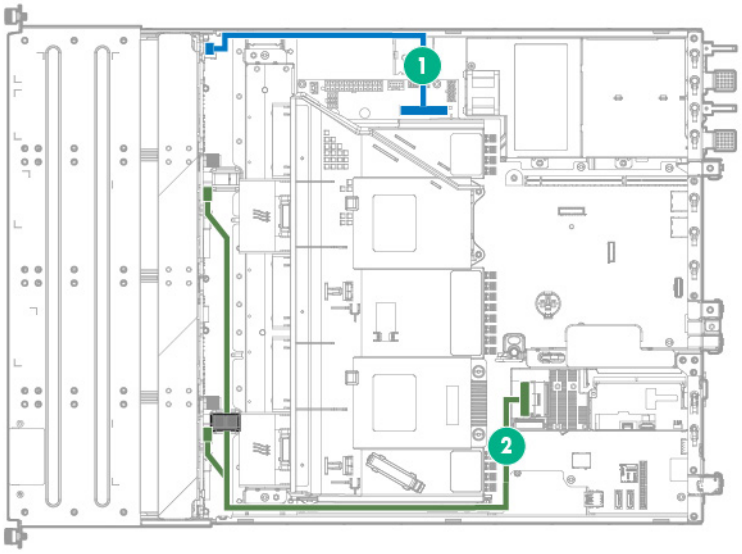

Item	Description
1	Drive power cable
2	Mini SAS Y-cable

8-bay SFF hot-plug SATA drive cabling

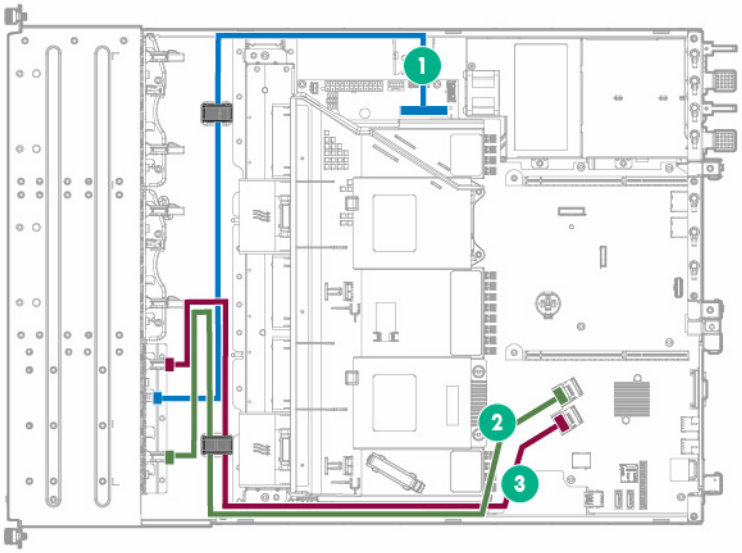

Item	Description
1	Drive power cable
2	Mini-SAS cable 2
3	Mini-SAS cable 1

8-bay SFF hot-plug SAS/SATA drive cabling

- Drives connected to an HBA option

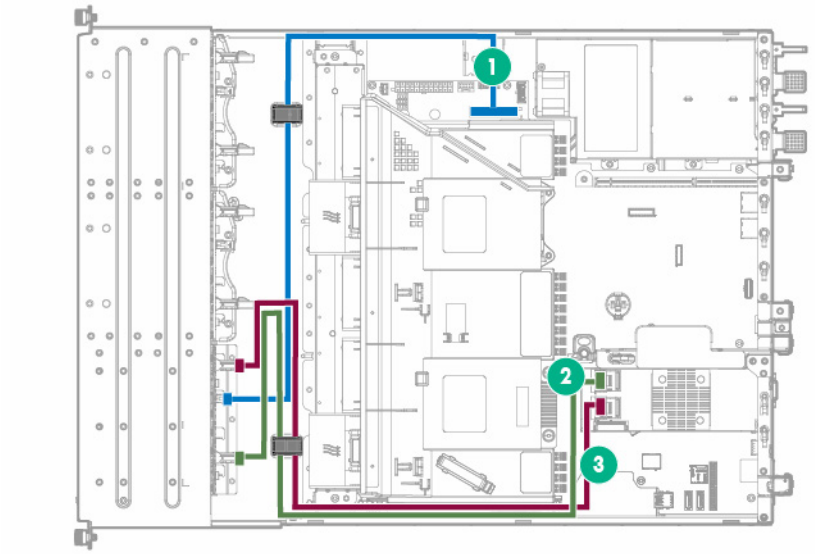

Item	Description
1	Drive power cable
2	Mini-SAS cable 2
3	Mini-SAS cable 1

- Drives connected to an HPE Smart Array Controller option

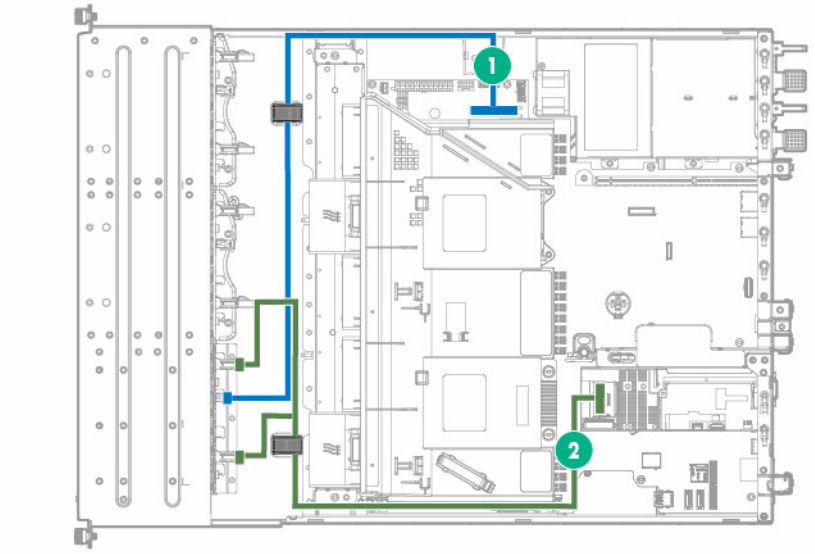

Item	Description
1	Drive power cable
2	Mini-SAS Y-cable

16-bay SFF hot-plug SAS/SATA drive cabling

- Drives connected to two HPE Smart Array P440 Controllers

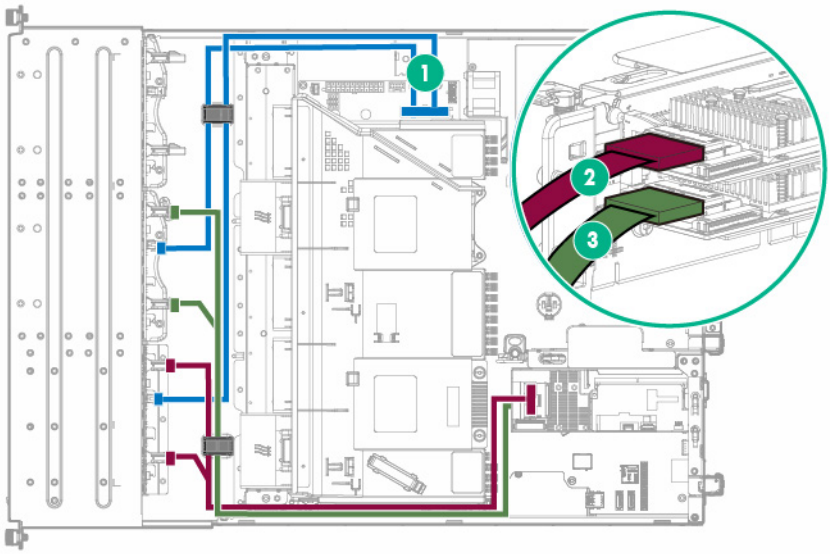

Item	Description
1	Drive power cable
2	Mini-SAS Y-cable to the box 3 drives
3	Mini-SAS Y-cable to the box 2 drives

- Drives connected to an HPE Smart Array P840 Controller

Item	Description
1	Drive power cables
2	Mini-SAS Y-cable to the box 3 drives
3	Mini-SAS Y-cable to the box 2 drives

M.2 SSD cabling

- M.2 SSD cabling from the primary PCIe riser location

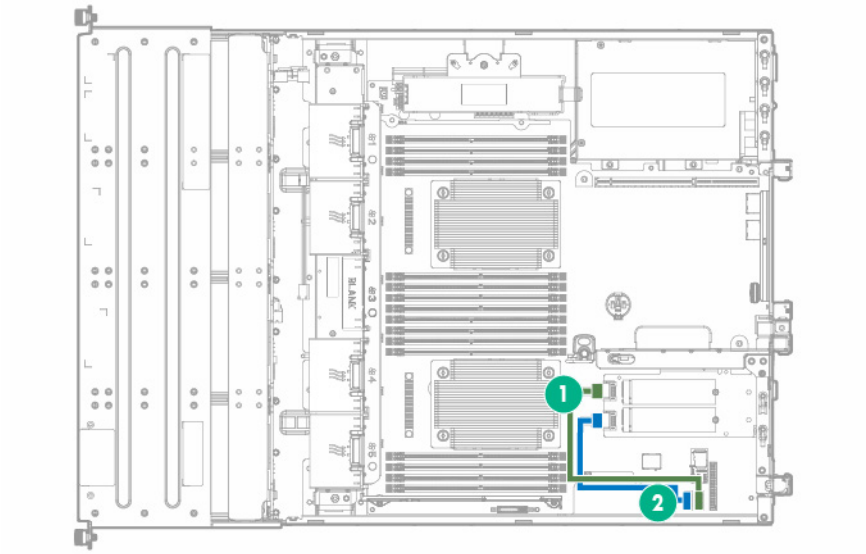

Item	Description
1	M.2 SSD 2 SATA cable
2	M.2 SSD 1 SATA cable

- M.2 SSD cabling from the secondary PCIe riser location

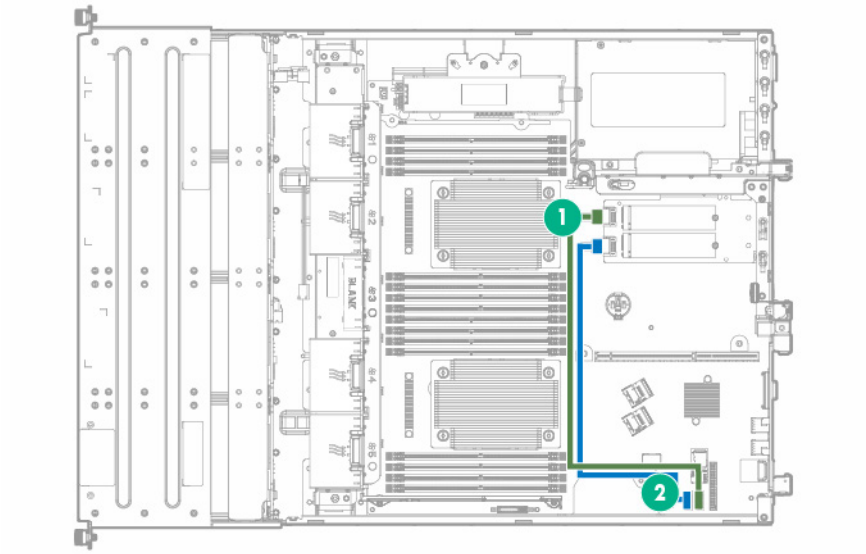

Item	Description
1	M.2 SSD 2 SATA cable
2	M.2 SSD 1 SATA cable

FBWC module backup power cabling

The FBWC solution is a separately purchased option. This server only supports FBWC module installation when a Smart Array P-Series controller is installed.

Depending on the controller option installed, the actual storage controller connectors might look different from what is shown in this section.

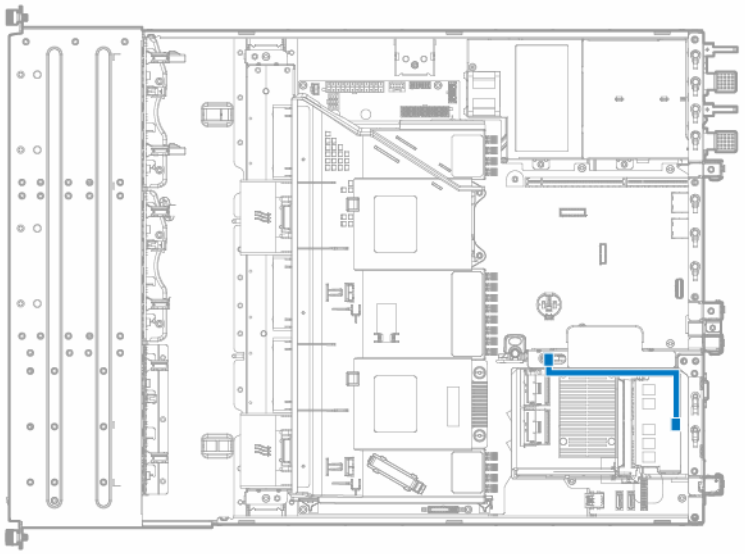

HPE Smart Storage Battery cabling

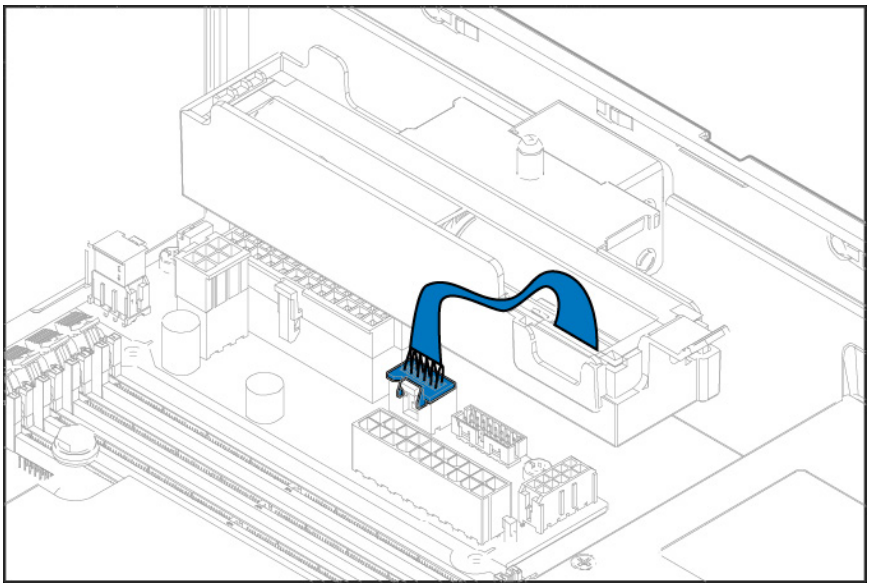

Optical drive cabling

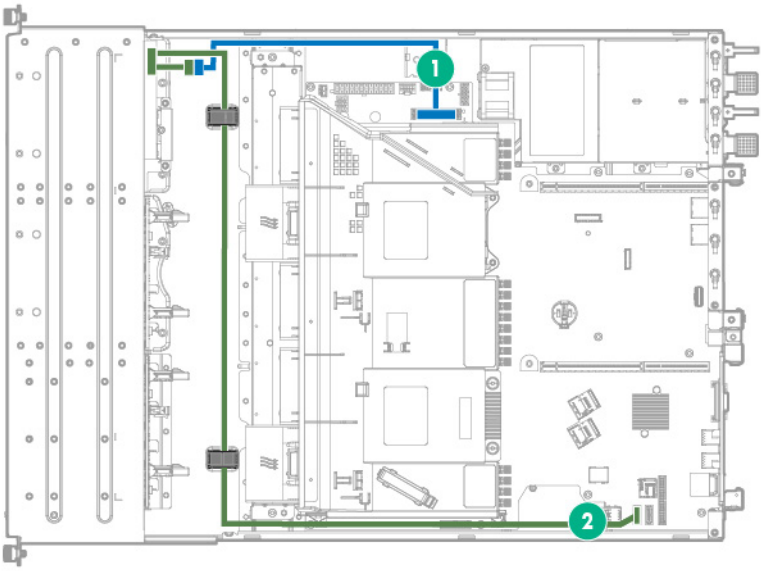

Item	Description
1	Optical drive power cable
2	Optical drive SATA cable

Fan cabling

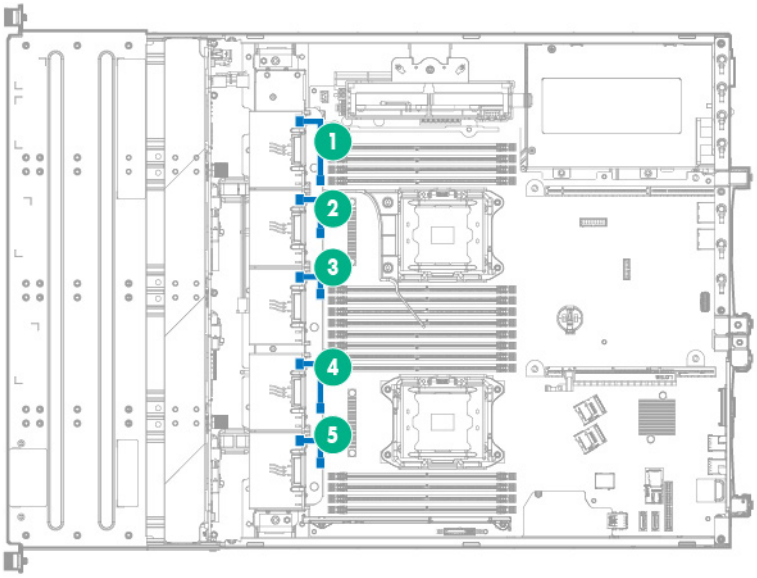

Item	Description
1	Fan 1 cable
2	Fan 2 cable
3	Fan 3 cable
4	Fan 4 cable
5	Fan 5 cable

GPU power drive cabling

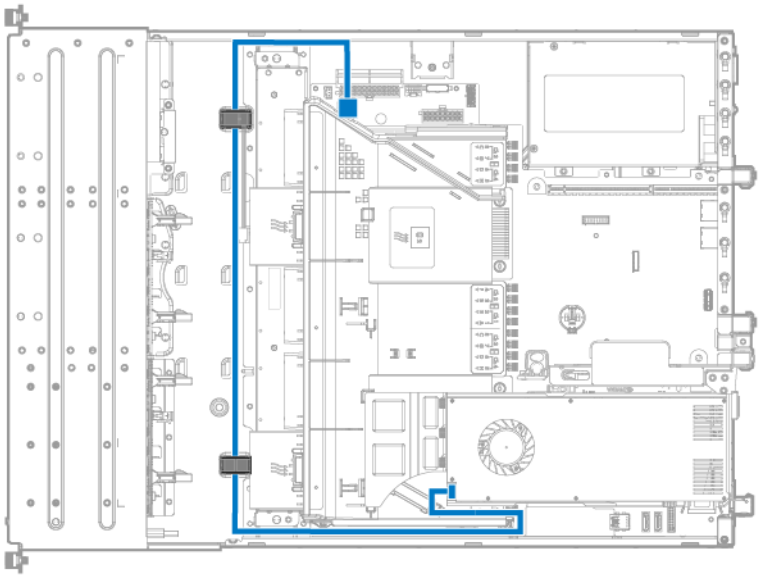

FlexibleLOM sideband signal cabling

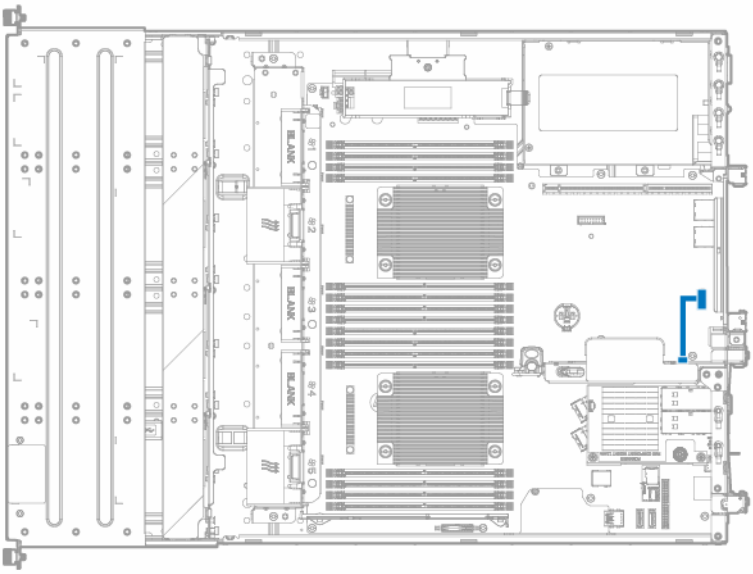

Power supply cabling

HPE 550-W Power Supply cabling (non-hot-plug)

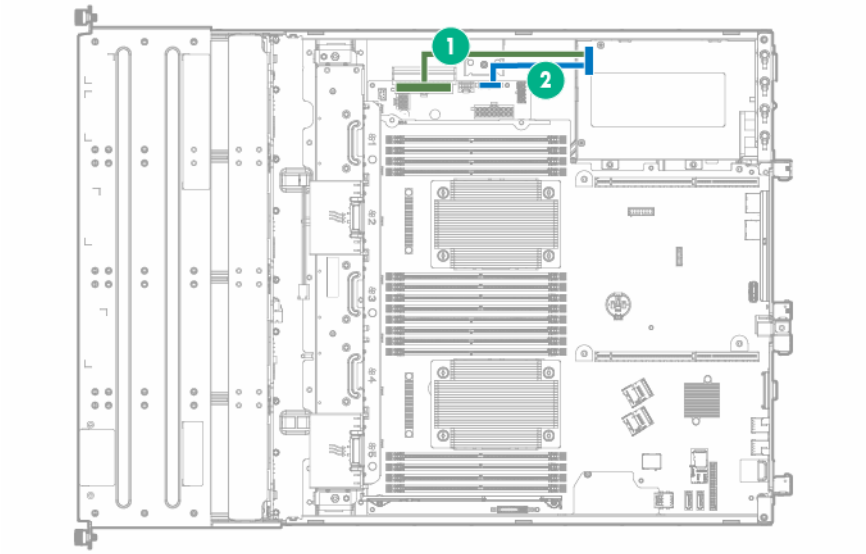

Item	Description
1	24-pin power supply cable
2	16-pin power supply sideband signal cable

HPE Redundant Power Supply cabling (hot-plug)

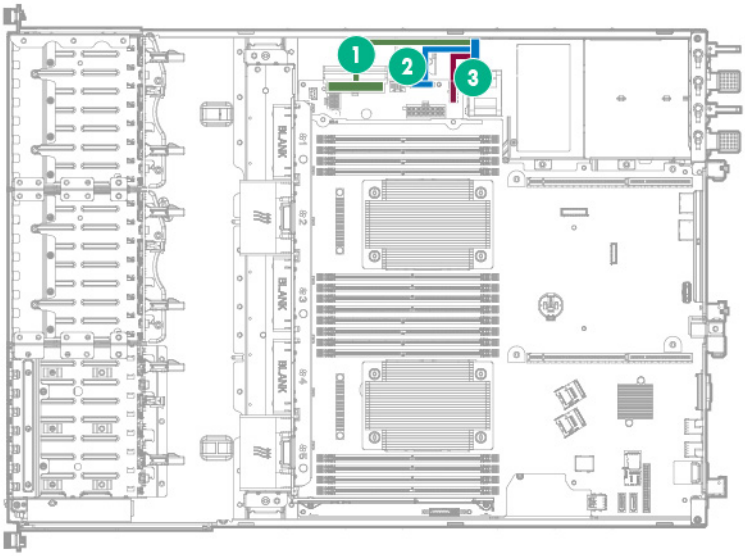

Item	Description
1	24-pin power supply cable
2	16-pin power supply sideband signal cable
3	10-pin RPS cable

Front panel cabling

- Front panel cabling in an LFF chassis with thumbscrew rack ears

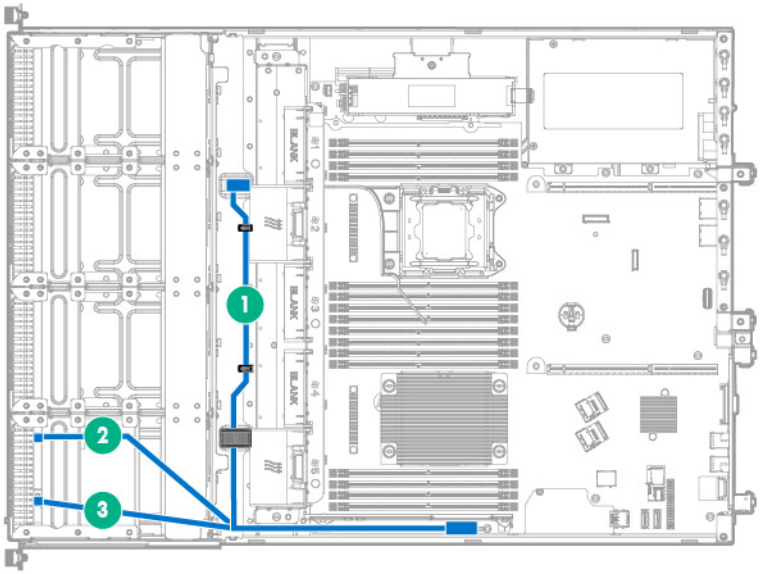

Item	Description
1	Ambient temperature sensor cable
2	USB 2.0 connector cable
3	Front I/O cable

- Front panel cabling in an LFF chassis with quick-release latch rack ears

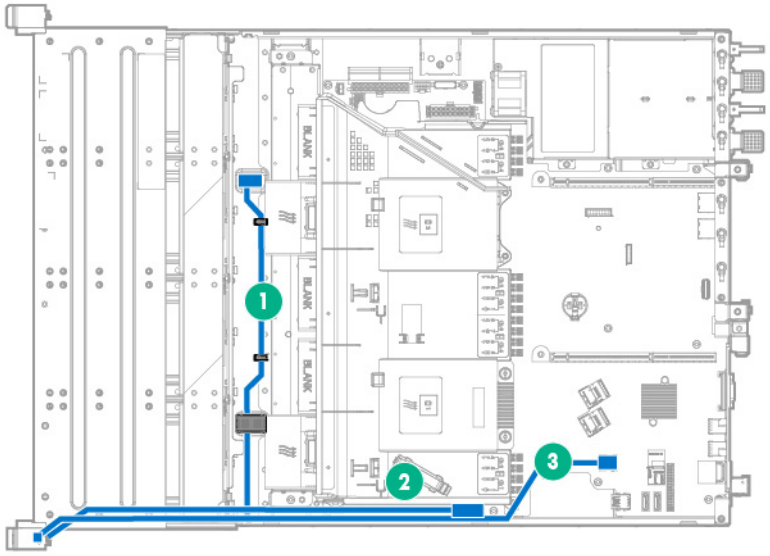

Item	Description
1	Ambient temperature sensor cable
2	Front I/O cable
3	USB 3.0 connector cable

- Front panel cabling in an SFF chassis with thumbscrew rack ears

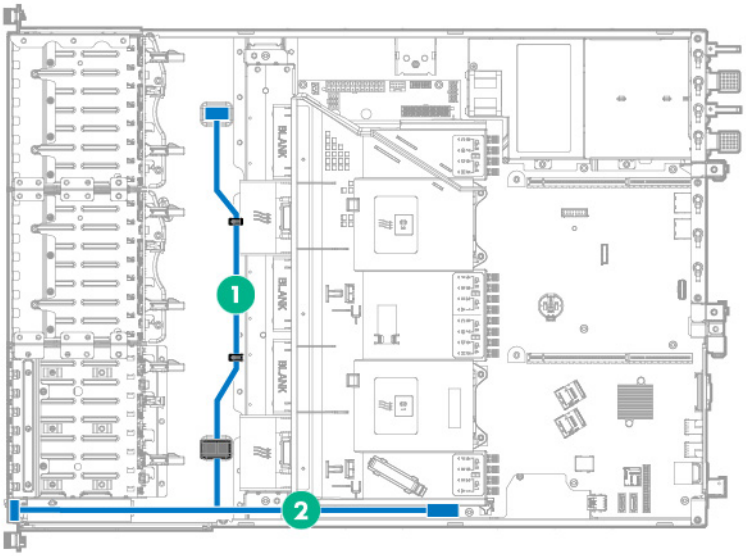

Item	Description
1	Ambient temperature sensor cable
2	Front I/O cable

- Front panel cabling in an SFF chassis with quick-release latch rack ears

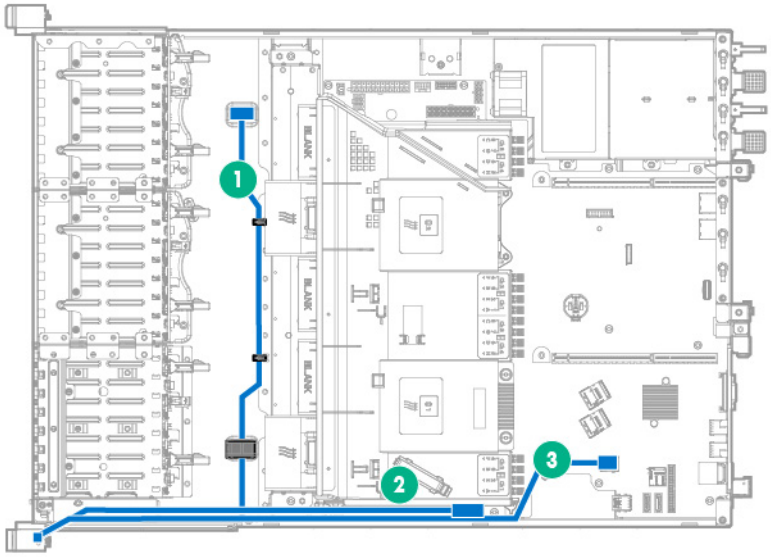

Item	Description
1	Ambient temperature sensor cable
2	Front I/O cable
3	USB 3.0 connector cable

Specifications

Environmental specifications

Specification	Value
Temperature range*	—
Operating	10°C to 35°C (50°F to 95°F)
Nonoperating	-30°C to 60°C (-22°F to 140°F)
Relative humidity (noncondensing)	—
Operating	Minimum to be the higher (more moisture) of -12°C (10.4°F) dew point or 8% relative humidity Maximum to be 24°C (75.2°F) dew point or 90% relative humidity
Nonoperating	5% to 95% 38.7°C (101.7°F), maximum wet bulb temperature

* All temperature ratings shown are for sea level. An altitude derating of 1.0°C per 304.8 m (1.8°F per 1000 ft) to 3048 m (10,000 ft) is applicable. No direct sunlight allowed. Maximum rate of change is 20°C per hour (36°F per hour). The upper limit and rate of change might be limited by the type and number of options installed.

For certain approved hardware configurations, the supported system inlet temperature range is extended:

- 5°C to 10°C (41°F to 50°F) and 35°C to 40°C (95°F to 104°F) at sea level with an altitude derating of 1.0°C per every 175 m (1.8°F per every 574 ft) above 900 m (2953 ft) to a maximum of 3048 m (10,000 ft).
- 40°C to 45°C (104°F to 113°F) at sea level with an altitude derating of 1.0°C per every 125 m (1.8°F per every 410 ft) above 900 m (2953 ft) to a maximum of 3048 m (10,000 ft).

The approved hardware configurations for this system are listed on the Hewlett Packard Enterprise website (http://www.hpe.com/servers/ASHRAE).

Mechanical specifications

Dimension	Value
Height*	8.75 cm (3.44 in)
Depth*	60.70 cm (23.90 in)
Width*	44.54 cm (17.50 in)
Weight (full load, approximate values)	—
4-bay LFF drive model	16.59 kg (36.58 lb)
8-bay LFF drive model	19.19 kg (42.31 lb)
12-bay LFF drive model	21.59 kg (47.60 lb)
8-bay SFF drive model with optical drive	16.09 kg (35.48 lb)
8-bay SFF drive model without optical drive	15.95 kg (35.17 lb)
16-bay SFF drive model with optical drive	17.95 kg (39.60 lb)
16-bay SFF drive model without optical drive	17.87 kg (39.40 lb)

* These dimensions apply to all server models.

Power supply specifications

Depending on the installed options and/or the regional location where the server was purchased, the server is configured with one of the following power supplies:

- 550-W Power Supply (PN 730941-B21)
- 800-W/900-W Gold AC Power Input Module (PN 744689-B21)

  This is supported when the two-bay RPS Backplane option (PN 745813-B21) is installed.

These are Entry Level Power Supply products for ProLiant servers. For more information about the power supply features, specifications, and compatibility, see the Hewlett Packard Enterprise website (http://www.hpe.com/info/proliant/powersupply).

△ **CAUTION:** Check the system and power supply input ratings before powering up the server.

Hot-plug power supply calculations

For hot-plug power supply specifications and calculators to determine electrical and heat loading for the server, see the Hewlett Packard Enterprise Power Advisor website (http://www.hpe.com/info/rackandpower).

Acronyms and abbreviations

ABEND

abnormal end

AMP

Advanced Memory Protection

API

application program interface

ASHRAE

American Society of Heating, Refrigerating and Air-Conditioning Engineers

ASR

Automatic Server Recovery

BP

backplane

CSR

Customer Self Repair

FAT

file allocation table

FBWC

flash-backed write cache

GPU

graphics processing unit

HBA

host bus adapter

HPE SIM

HPE Systems Insight Manager

HPE SSA

HPE Smart Storage Administrator

iLO

Integrated Lights-Out

IML

Integrated Management Log

LFF

large form factor

LOM

Lights-Out Management

NAND

Not AND

NMI

nonmaskable interrupt

NVRAM

nonvolatile memory

ODD

Optical Disk Drive

PCIe

Peripheral Component Interconnect Express

POST

Power-On Self Test

QR code

quick response code

RBSU

ROM-Based Setup Utility

REST

representational state transfer

RPS

redundant power supply

SAS

serial attached SCSI

SATA

serial ATA

SD

Secure Digital

SFF

small form factor

SIM

Systems Insight Manager

SPP

Service Pack for ProLiant

SSD

solid-state drive

SUV

serial, USB, video

TPM

Trusted Platform Module

UEFI

Unified Extensible Firmware Interface

UID

unit identification

USB

universal serial bus

Documentation feedback

Hewlett Packard Enterprise is committed to providing documentation that meets your needs. To help us improve the documentation, send any errors, suggestions, or comments to Documentation Feedback (mailto:docsfeedback@hpe.com). When submitting your feedback, include the document title, part number, edition, and publication date located on the front cover of the document. For online help content, include the product name, product version, help edition, and publication date located on the legal notices page.

Index

A

access panel, removing 37
Active Health System 87
ACU (Array Configuration Utility) 92
air baffle, removing 32
air scoop 44
ambient temperature 118
Automatic Server Recovery (ASR) 92

B

battery pack, removing 43
bezel, removing 27
boot options 89, 90

C

cable management arm 30
cabling 105, 115
cabling, battery pack 112
cabling, drive 105
cabling, FlexibleLOM 114
cabling, GPU 114
cache module battery pack 43
Care Pack 91
clearing NVRAM 101
CMOS 101
components, front panel 93
components, rear panel 97
crash dump analysis 102
customer self repair (CSR) 6

D

dedicated iLO management module, removing 65
diagnosing problems 86
diagnostic tools 87, 89, 90, 92
dimensions and weight 118
DIMM slot locations 101
DIMMs, removing 52
documentation feedback 123
drive backplane 40, 42
drive blank 35, 36
drive cabling 105
drive carrier 34
drive LEDs 103
drives, determining status of 102, 103

E

electrostatic discharge 24
embedded UEFI diagnostics 90
environmental specifications 118
error messages 86
expansion board 59
extending server from rack 27
external USB functionality 92

F

fan blank 50
fan cage 33
fan location 104
fan population guidelines 49
fans, removing 51
FBWC cabling 111
FBWC module 44
FlexibleLOM riser board 61
FlexibleLOM riser cage 61
FlexibleLOM sideband signal cabling 114
front I/O assembly 67
front panel buttons 94
front panel components 93
front panel LED power fault codes 96
front panel LEDs 94

G

GPU power cabling 114
grounding methods 24
grounding requirements 24

H

health driver 92
health LED 94
heatsink 53
Hewlett Packard Enterprise Technical Support 6
hot-plug drive backplane 40, 42
hot-plug drive blank 35
hot-plug drive, removing 36
hot-plug power supply 82, 83, 119
hot-plug power supply calculations 119
hot-swap fan 51
HPE iLO 87
HPE Insight Diagnostics 90, 91
HPE Insight Diagnostics survey functionality 90, 91
HPE Insight Online 91
HPE Insight Remote Support software 91
HPE ProLiant Pre-boot Health Summary 88
HPE Smart Storage Battery 43
HPE Smart Storage Battery cabling 112
HPE SmartDrive LED definitions 103

HPE SSA (HPE Smart Storage Administrator) 92
HPE Systems Insight Manager (SIM) 90
HP Trusted Platform Module option 85
HPE Universal Media bay 93
humidity 118

I

illustrated parts catalog 16
Insight Diagnostics 90, 91
Integrated Lights-Out (iLO) 87
Intelligent Provisioning 89, 90
internal USB connector 91

L

LED, health 94
LED, system power 94
LEDs, drive 103
LEDs, front panel 94
LEDs, NIC 94
LEDs, power fault 94, 96
LEDs, rear panel 97
LEDs, unit identification (UID) 94
legacy USB support 91

M

M.2 SATA SSD enablement board 46
management tools 87
mechanical components 16
mechanical specifications 118
memory dump 102

N

NIC activity LED 94, 97
NIC connectors 97
NIC link LED 94, 97
NMI functionality 102
NMI header 102
non-hot-plug drive cable assembly 38
non-hot-plug drive carrier 34
non-hot-plug drives 34
non-hot-plug power supply 81, 119

O

operating system crash 92, 102
operating systems supported 91
optical drive 48

P

PCI riser board 60
PCI riser cage, removing 31
POST error messages 86
power calculator 119
power fault 96
Power On/Standby button 94
power supply 81, 119
power supply cabling 115
power supply specifications 119
power supply, hot-plug 82, 83, 119
power supply, non-hot-plug 81, 119
powering down 27
power-on password 101
preparation procedures 26
problem diagnosis 86, 87
processor 55
Product ID 90
pull tab cage 71

Q

QR code label 89
quick-release latch rack ears 69
QuickSpecs 87

R

rack ears 27, 69
rack warnings 25
RAID configuration 92
rear panel components 97
rear panel LEDs 97
rear panel, accessing 30
redundant power supply 83, 119
redundant power supply cabling 115
re-entering the server serial number 90
remote support and analysis tools 91
removal and replacement procedures 24
removing server from rack 30
removing the security bezel 27
required tools 24
requirements, environmental 118
ROM legacy USB support 91
ROM-Based Setup Utility (RBSU) 89

S

safety considerations 24
security bezel, removing 27
serial label pull tab 94
serial number 90
server specifications 118
server warnings and cautions 25
SmartStart, overview 87
solid state device 46
specifications, environmental 118
specifications, mechanical 118
specifications, power supply 119
specifications, server 118
SPP 90
static electricity 24
symbols on equipment 24
system board 72
system board components 100

system components 19
system configuration settings 101
system maintenance switch 101

T

technical support 6
temperature requirements 118
three-slot PCI riser cage 31
troubleshooting resources 86, 87, 93, 105, 118
Trusted Platform Module (TPM) 85
two-slot PCI riser cage 31

U

UEFI System Utilities 89
UID (unit identification) 94
UID button 94
UID LED 94
USB connector 93, 97
USB support 91

W

warnings 25
warranty information 6
weight 118