lenovo

ThinkStation P500 and P700 User Guide

Machine Types: 30A6, 30A7, 30A8, and 30A9

Note: Before using this information and the product it supports, be sure to read and understand the “Read this first: Important safety information” on page v and Appendix E “Notices” on page 171.

Third Edition (September 2015)

© Copyright Lenovo 2014, 2015.

LIMITED AND RESTRICTED RIGHTS NOTICE: If data or software is delivered pursuant a General Services Administration “GSA” contract, use, reproduction, or disclosure is subject to restrictions set forth in Contract No. GS-35F-05925.

Contents

Read this first: Important safety information v
Before using this manual v
Service and upgrades v
Static electricity prevention vi
Power cords and power adapters vi
Extension cords and related devices vii
Plugs and outlets vii
External devices vii
Heat and product ventilation vii
Operating environment viii
Laser compliance statement viii
Power supply statement ix
Cleaning and maintenance ix

Chapter 1. Product overview 1
Locations 1
Locating connectors, controls, and indicators on the front of your computer 2
Locating connectors on the rear of your computer 2
Locating components 6
Locating parts on the system board 6
Locating internal drives 10
Locating the machine type and model label . 11
Features 11
Specifications 15
Lenovo programs 15
Accessing a program on your computer . . . 15
An introduction to Lenovo programs 16

Chapter 2. Using your computer . . . 19
Registering your computer 19
Using Windows shortcut keys 19
Using fingerprint authentication 19
Using the wheel mouse 20
Managing power 20
Advanced configuration and power interface (ACPI) BIOS 20
Automatic Power-on features 20
Setting the computer volume 21
Using a disc 21
Using the optical drive 21
Handling and storing a disc 22
Playing and removing a disc 22
Recording a disc 22
Navigating among screens on the Windows 8.1 operating system 22
Accessing Control Panel on the Windows 8.1 operating system 24
Frequently asked questions 24

Chapter 3. You and your computer . . 27
Accessibility and comfort 27
Arranging your workspace 27
Comfort 27
Glare and lighting 28
Air circulation 28
Electrical outlets and cable lengths 28
Accessibility information 28
Moving your computer to another country or region 31

Chapter 4. Security 33
Security features 33
Locking the computer cover 33
Attaching a Kensington-style cable lock 35
Using passwords and Windows accounts 35
Using fingerprint authentication 36
Using and understanding firewalls 36
Protecting data against viruses 36

Chapter 5. Advanced configuration . . 37
Using the Setup Utility program 37
Starting the Setup Utility program 37
Viewing and changing settings 37
Using BIOS passwords 38
Enabling or disabling a device 39
Selecting a startup device 40
Enabling ErP LPS compliance mode 40
Exiting the Setup Utility program 41
Updating or recovering the BIOS 41
BIOS levels 41
Using system programs 42
Changing the BIOS settings before installing a new operating system 42
Updating the BIOS 42
Recovering from a BIOS update failure . . . 43
Configuring RAID 43
Configuring RAID with Intel RSTe 43
Quick RAID setup using the LSI MegaRAID BIOS configuration utility 46

Chapter 6. Preventing problems . . . 49

© Copyright Lenovo 2014, 2015

Keeping your computer current 49
Getting the latest system updates 49
Cleaning and maintenance 49
Basics 49
Cleaning your computer 50
Good maintenance practices 51
Moving your computer 51

Chapter 7. Troubleshooting and diagnostics 53
Basic troubleshooting 53
Troubleshooting procedure 54
Troubleshooting 54
Audio problems 55
CD problems 55
DVD problems 56
Intermittent problems 57
Hard disk drive problems 57
Problems with the keyboard or mouse . . . 58
Monitor problems 58
Networking problems 59
I have connected an option to my computer, but it does not work 61
Performance and lockup problems 61
The printer does not work 62
Serial connector cannot be accessed 62
Software problems 63
My USB connectors cannot be accessed . . 63
Diagnostics 64
Lenovo Solution Center 64
Hardware diagnostics 64

Chapter 8. Recovery information . . . 67
Recovery information for the Windows 7 operating system 67
Creating and using recovery media 67
Performing backup and recovery operations . 68
Creating and using a rescue medium 70
Reinstalling programs and device drivers . . 70
Solving recovery problems 72
Recovery information for the Windows 8.1 operating system 72
Refreshing your computer 72
Resetting your computer to the factory-default settings 72
Using the advanced startup options 73
Recovering your operating system if Windows 8.1 fails to start 73
Recovery information for the Windows 10 operating system 73

Chapter 9. Installing or replacing hardware 75
Handling static-sensitive devices 75
Installing or replacing hardware 75
Installing external options 75
Removing the computer cover 75
Removing and reinstalling the direct cooling air baffle 76
Installing or replacing a device in the optical drive bay 78
Installing or replacing a device in the 5.25-inch flex module 81
Removing and reinstalling the optical drive bracket 88
Replacing the cover presence switch 90
Replacing the front fan assembly 92
Installing or replacing an internal storage drive 93
Replacing the power supply assembly . . . 120
Installing or replacing a PCI card 121
Installing or replacing a full-length PCI card . . 126
Installing or replacing the super capacitor module 128
Replacing the rear fan assembly 131
Replacing the heat sink and fan assembly . . 133
Installing or replacing a memory module . . . 135
Installing or replacing a flex adapter 137
Replacing the battery 139
Replacing the Wi-Fi units 141
Installing or removing the Wi-Fi antennas . . 146
Replacing the keyboard or mouse 148
Completing the parts replacement 149

Chapter 10. Getting information, help, and service 153
Information resources 153
Lenovo ThinkVantage Tools 153
Windows help system 153
Safety and Warranty 153
Lenovo Web site 153
Lenovo Support Web site 154
Help and service 154
Using the documentation and diagnostic program 154
Calling for service 154
Using other services 155
Purchasing additional services 155

Chapter 11. System memory speed 157

Appendix A. Regulatory information 159
Export classification notice 159
Electronic emissions notices 159
Federal Communications Commission Declaration of Conformity 159
Eurasian compliance mark 161
Brazil audio notice 161
Mexico wireless-radio compliance information . . 161
Additional regulatory information 161

Appendix B. WEEE and recycling information 163
Important WEEE information 163
Recycling information for Japan 163
Recycling information for Brazil 164
Battery recycling information for Taiwan 164
Battery recycling information for the European Union 164

Appendix C. Restriction of Hazardous Substances Directive (RoHS) 167
European Union RoHS 167
China RoHS 167
Turkish RoHS 167
Ukraine RoHS 168
India RoHS 168

Appendix D. ENERGY STAR model information 169

Appendix E. Notices 171
Trademarks 172

Index. 173

© Copyright Lenovo 2014, 2015

Read this first: Important safety information

This chapter contains the safety information that you must be familiar with.

Before using this manual

CAUTION:
Before using this manual, be sure to read and understand all the related safety information for this product. Refer to the information in this section and the safety information in the *Safety, Warranty, and Setup Guide* **that you received with this product. Reading and understanding this safety information reduces the risk of personal injury and damage to your product.**

If you no longer have a copy of the *Safety, Warranty, and Setup Guide*, you can obtain a Portable Document Format (PDF) version from the Lenovo® Support Web site at http://www.lenovo.com/UserManuals. The Lenovo Support Web site also provides the *Safety, Warranty, and Setup Guide* and this *User Guide* in additional languages.

Service and upgrades

Do not attempt to service a product yourself unless instructed to do so by the Customer Support Center or your documentation. Only use a Service Provider who is approved to repair your particular product.

Note: Some computer parts can be upgraded or replaced by the customer. Upgrades typically are referred to as options. Replacement parts approved for customer installation are referred to as Customer Replaceable Units, or CRUs. Lenovo provides documentation with instructions when it is appropriate for customers to install options or replace CRUs. You must closely follow all instructions when installing or replacing parts. The Off state of a power indicator does not necessarily mean that voltage levels inside a product are zero. Before you remove the covers from a product equipped with a power cord, always ensure that the power is turned off and that the product is unplugged from any power source. For more information on CRUs, refer to Chapter 9 “Installing or replacing hardware” on page 75. If you have any questions or concerns, contact the Customer Support Center.

Although there are no moving parts in your computer after the power cord has been disconnected, the following warnings are required for your safety.

CAUTION:

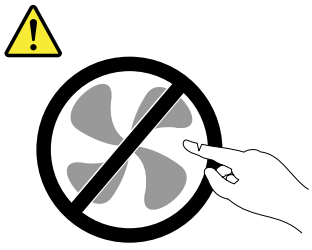

Hazardous moving parts. Keep fingers and other body parts away.

CAUTION:

Before you open the computer cover, turn off the computer and wait several minutes until the computer is cool.

© Copyright Lenovo 2014, 2015

Static electricity prevention

Static electricity, although harmless to you, can seriously damage computer components and options. Improper handling of static-sensitive parts can cause damage to the part. When you unpack an option or CRU, do not open the static-protective package containing the part until the instructions direct you to install it.

When you handle options or CRUs, or perform any work inside the computer, take the following precautions to avoid static-electricity damage:

- Limit your movement. Movement can cause static electricity to build up around you.
- Always handle components carefully. Handle adapters, memory modules, and other circuit boards by the edges. Never touch exposed circuitry.
- Prevent others from touching components.
- When you install a static-sensitive option or CRU, touch the static-protective package containing the part to a metal expansion-slot cover or other unpainted metal surface on the computer for at least two seconds. This reduces static electricity in the package and your body.
- When possible, remove the static-sensitive part from the static-protective packaging and install the part without setting it down. When this is not possible, place the static-protective packaging on a smooth, level surface and place the part on it.
- Do not place the part on the computer cover or other metal surface.

Power cords and power adapters

Use only the power cords and power adapters supplied by the product manufacturer. Do not use the ac power cord for other devices.

The power cords shall be safety approved. For Germany, it shall be H05VV-F, 3G, 0.75 mm^2, or better. For other countries, the suitable types shall be used accordingly.

Never wrap a power cord around a power adapter or other object. Doing so can stress the cord in ways that can cause the cord to fray, crack, or crimp. This can present a safety hazard.

Always route power cords so that they will not be walked on, tripped over, or pinched by objects.

Protect power cord and power adapters from liquids. For instance, do not leave your power cord or power adapter near sinks, tubs, toilets, or on floors that are cleaned with liquid cleansers. Liquids can cause a short circuit, particularly if the power cord or power adapter has been stressed by misuse. Liquids also can cause gradual corrosion of power cord terminals and/or the connector terminals on a power adapter, which can eventually result in overheating.

Ensure that all power cord connectors are securely and completely plugged into receptacles.

Do not use any power adapter that shows corrosion at the ac input pins or shows signs of overheating (such as deformed plastic) at the ac input or anywhere on the power adapter.

Do not use any power cords where the electrical contacts on either end show signs of corrosion or overheating or where the power cord appears to have been damaged in any way.

Extension cords and related devices

Ensure that extension cords, surge protectors, uninterruptible power supplies, and power strips that you use are rated to handle the electrical requirements of the product. Never overload these devices. If power strips are used, the load should not exceed the power strip input rating. Consult an electrician for more information if you have questions about power loads, power requirements, and input ratings.

Plugs and outlets

If a receptacle (power outlet) that you intend to use with your computer equipment appears to be damaged or corroded, do not use the outlet until it is replaced by a qualified electrician.

Do not bend or modify the plug. If the plug is damaged, contact the manufacturer to obtain a replacement.

Do not share an electrical outlet with other home or commercial appliances that draw large amounts of electricity; otherwise, unstable voltage might damage your computer, data, or attached devices.

Some products are equipped with a three-pronged plug. This plug fits only into a grounded electrical outlet. This is a safety feature. Do not defeat this safety feature by trying to insert it into a non-grounded outlet. If you cannot insert the plug into the outlet, contact an electrician for an approved outlet adapter or to replace the outlet with one that enables this safety feature. Never overload an electrical outlet. The overall system load should not exceed 80 percent of the branch circuit rating. Consult an electrician for more information if you have questions about power loads and branch circuit ratings.

Be sure that the power outlet you are using is properly wired, easily accessible, and located close to the equipment. Do not fully extend power cords in a way that will stress the cords.

Be sure that the power outlet provides the correct voltage and current for the product you are installing.

Carefully connect and disconnect the equipment from the electrical outlet.

External devices

Do not connect or disconnect any external device cables other than Universal Serial Bus (USB) cables while the computer power is on; otherwise, you might damage your computer. To avoid possible damage to attached devices, wait at least five seconds after the computer is shut down to disconnect external devices.

Heat and product ventilation

Computers, power adapters, and many accessories can generate heat when turned on and when batteries are charging. Always follow these basic precautions:

- Do not leave your computer, power adapter, or accessories in contact with your lap or any part of your body for an extended period when the products are functioning or when the battery is charging. Your computer, power adapter, and many accessories produce some heat during normal operation. Extended contact with the body could cause discomfort or, potentially, a skin burn.
- Do not charge the battery or operate your computer, power adapter, or accessories near flammable materials or in explosive environments.
- Ventilation slots, fans, and heat sinks are provided with the product for safety, comfort, and reliable operation. These features might inadvertently become blocked by placing the product on a bed, sofa, carpet, or other flexible surface. Never block, cover, or disable these features.

© Copyright Lenovo 2014, 2015

Inspect your desktop computer for dust accumulation at least once every three months. Before inspecting your computer, turn off the power and unplug the computer's power cord from the electrical outlet; then remove any dust from vents and perforations in the bezel. If you notice external dust accumulation, then examine and remove dust from the inside of the computer including heat sink inlet fins, power supply vents, and fans. Always turn off and unplug the computer before opening the cover. If possible, avoid operating your computer within two feet of high-traffic areas. If you must operate your computer in or near a high-traffic area, inspect and, if necessary, clean your computer more frequently.

For your safety and to maintain optimum computer performance, always follow these basic precautions with your desktop computer:

- Keep the cover closed whenever the computer is plugged in.
- Regularly inspect the outside of the computer for dust accumulation.
- Remove dust from vents and any perforations in the bezel. More frequent cleanings might be required for computers in dusty or high-traffic areas.
- Do not restrict or block any ventilation openings.
- Do not store or operate your computer inside furniture, as this might increase the risk of overheating.
- Airflow temperatures into the computer should not exceed 35°C (95°F).
- Do not install air filtration devices. They may interfere with proper cooling.

Operating environment

The optimal environment in which to use your computer is 10°C–35°C (50°F–95°F) with humidity ranging between 35% and 80%. If your computer is stored or transported in temperatures less than 10°C (50°F), allow the cold computer to rise slowly to an optimal operating temperature of 10°C–35°C (50°F–95°F) before use. This process could take two hours in extreme conditions. Failure to allow your computer to rise to an optimal operating temperature before use could result in irreparable damage to your computer.

If possible, place your computer in a well-ventilated and dry area without direct exposure to sunshine.

Keep electrical appliances such as an electric fan, radio, high-powered speakers, air conditioner, and microwave oven away from your computer because the strong magnetic fields generated by these appliances can damage the monitor and data on the hard disk drive.

Do not place any beverages on top of or beside the computer or other attached devices. If liquid is spilled on or in the computer or an attached device, a short circuit or other damage might occur.

Do not eat or smoke over your keyboard. Particles that fall into your keyboard can cause damage.

Laser compliance statement

CAUTION:
When laser products (such as CD-ROMs, DVD drives, fiber optic devices, or transmitters) are installed, note the following:

- **Do not remove the covers. Removing the covers of the laser product could result in exposure to hazardous laser radiation. There are no serviceable parts inside the device.**
- **Use of controls or adjustments or performance of procedures other than those specified herein might result in hazardous radiation exposure.**

DANGER

Some laser products contain an embedded Class 3A or Class 3B laser diode. Note the following:

Laser radiation when open. Do not stare into the beam, do not view directly with optical instruments, and avoid direct exposure to the beam.

Power supply statement

Never remove the cover on a power supply or any part that has the following label attached.

Hazardous voltage, current, and energy levels are present inside any component that has this label attached. There are no serviceable parts inside these components. If you suspect a problem with one of these parts, contact a service technician.

Cleaning and maintenance

Keep your computer and workspace clean. Shut down the computer and then disconnect the power cord before cleaning the computer. Do not spray any liquid detergent directly on the computer or use any detergent containing flammable material to clean the computer. Spray the detergent on a soft cloth and then wipe the computer surfaces.

© Copyright Lenovo 2014, 2015

Chapter 1. Product overview

This chapter provides the following information:

- Locations of connectors
- Locations of components
- Locations of parts on the system board
- Locations of internal drives
- Computer features
- Software programs provided by Lenovo

Locations

This section provides the following topics:

- “Locating connectors, controls, and indicators on the front of your computer” on page 2
- “Locating connectors on the rear of your computer” on page 2
- “Locating components” on page 6
- “Locating parts on the system board” on page 6
- “Locating internal drives” on page 10
- “Locating the machine type and model label” on page 11

Note: The components in your computer might look slightly different from the illustrations.

© Copyright Lenovo 2014, 2015

Locating connectors, controls, and indicators on the front of your computer

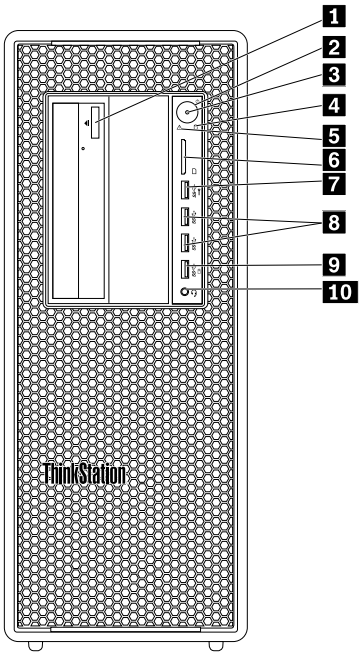

Figure 1. Front connector, control, and indicator locations

1 Optical drive eject/close button (available on some models)	**2** Power button
3 Power indicator	**4** Hard disk drive activity indicator
5 Diagnostic indicator	**6** Secure Digital (SD) card reader slot
7 Diagnostic Universal Serial Bus (USB) 3.0 connector	**8** USB 3.0 connectors (2)
9 Always On USB 3.0 connector	**10** Headset connector

Note: The orientation of the ThinkStation® logo plate on the front of your computer is adjustable. When you lay the computer on its side, you can slightly pull out the logo plate, turn it 90° counterclockwise, and then push it back in.

Locating connectors on the rear of your computer

Your ThinkStation computer comes with one of the following rear panels. Some connectors on the rear of your computer are color-coded to help you determine where to connect the cables on your computer.

ThinkStation P500

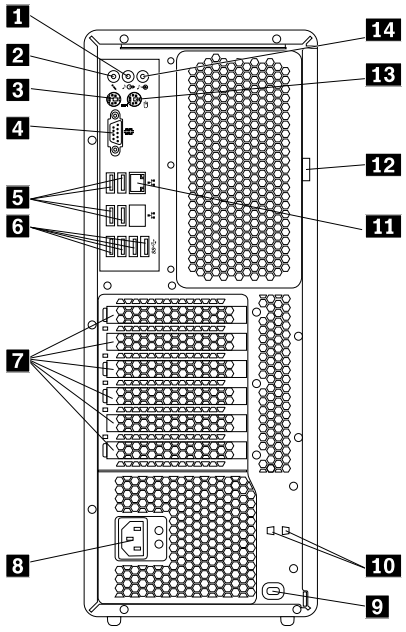

Figure 2. Rear connector locations

1 Audio line-out connector	2 Microphone connector
3 Personal System/2 (PS/2) keyboard connector	4 Serial connector
5 USB 2.0 connectors (4)	6 USB 3.0 connectors (4)
7 PCI card area (PCI cards available vary by model)	8 Power cord connector
9 Security-lock slot	10 Key-nest slots
11 Ethernet connector	12 Padlock loop
13 PS/2 mouse connector	14 Audio line-in connector

ThinkStation P700

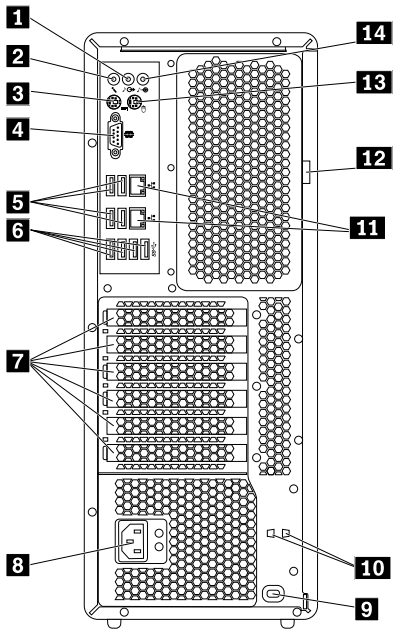

Figure 3. Rear connector locations

1 Audio line-out connector	2 Microphone connector
3 PS/2 keyboard connector	4 Serial connector
5 USB 2.0 connectors (4)	6 USB 3.0 connectors (4)
7 PCI card area (PCI cards available vary by model)	8 Power cord connector
9 Security-lock slot	10 Key-nest slots
11 Ethernet connectors (2)	12 Padlock loop
13 PS/2 mouse connector	14 Audio line-in connector

Note: For both ThinkStation P500 and ThinkStation P700 computers, one or more discrete graphics cards might be installed in the Peripheral Component Interconnect (PCI) card area. Depending on your computer model, the graphics cards might provide the following connectors:

- Digital Visual Interface (DVI) connector
- DisplayPort® connector
- Mini DisplayPort® connector

Connector	Description
Audio line-in connector	Used to receive audio signals from an external audio device, such as a stereo system. When you attach an external audio device, a cable is connected between the audio line-out connector of the device and the audio line-in connector of the computer.
Audio line-out connector	Used to send audio signals from the computer to external devices, such as powered stereo speakers (speakers with built-in amplifiers), headphones, multimedia keyboards, or the audio line-in connector on a stereo system or other external recording device.

Connector	Description
DisplayPort connector	Used to attach a high-performance monitor, a direct-drive monitor, or other devices that use a DisplayPort connector.
DVI monitor connector	Used to attach a DVI monitor or other devices that use a DVI monitor connector.
Ethernet connector	Used to attach an Ethernet cable for a local area network (LAN). **Note:** To operate the computer within Federal Communications Commission(FCC) Class B limits, use a Category 5 Ethernet cable.
Microphone connector	Used to attach a microphone to your computer when you want to record sound or if you use speech-recognition software.
Mini DisplayPort connector	Used to attach a high-performance monitor, a direct-drive monitor, or other devices that use a mini DisplayPort connector. The mini DisplayPort connector is a miniaturized version of a DisplayPort connector.
PS/2 keyboard connector (optional)	Used to attach a keyboard that uses a PS/2 keyboard connector.
PS/2 mouse connector (optional)	Used to attach a mouse, a trackball, or other pointing devices that use a PS/2 mouse connector.
Serial connector	Used to attach an external modem, a serial printer, or other devices that use a 9-pin serial connector.
USB 2.0 connector	Used to attach a device that requires a USB 2.0 connection, such as a keyboard, a mouse, a scanner, a printer, or a personal digital assistant (PDA).
USB 3.0 connector	Used to attach a device that requires a USB 2.0 or 3.0 connection, such as a keyboard, a mouse, a scanner, a printer, or a PDA.

Locating components

Notes:

- Depending on the model, your computer might look slightly different from the illustration.
- To remove the computer cover, see “Removing the computer cover” on page 75.

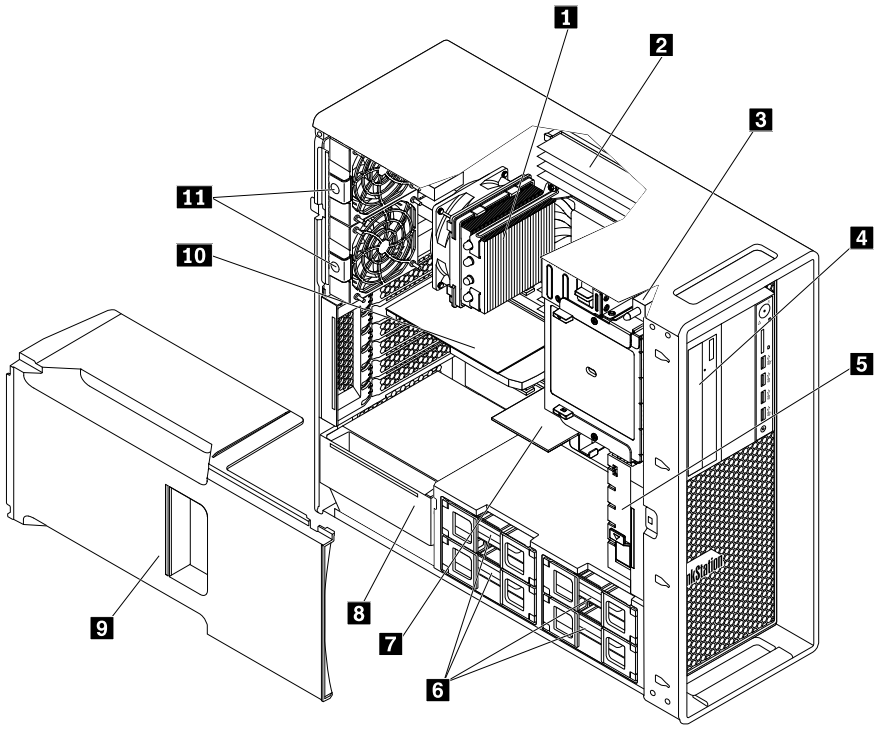

Figure 4. Component locations

1 Heat sink and fan assemblies (amount varies by model)	2 Memory modules (amount varies by model)
3 Cover presence switch (also called intrusion switch)	4 Optical drive, flex module, or front-access storage enclosure (amount and combination vary by model)
5 Front fan assembly (available on some models)	6 Hard disk drives, hybrid drives, or solid-state drives (amount and combination vary by model)*
7 Flex adapter (available on some models)	8 Power supply module
9 Direct cooling air baffle*	10 PCI card (available on some models)
11 Rear fan assemblies*	

Locating parts on the system board

Note: Your computer comes with one of the following system boards.

ThinkStation P500

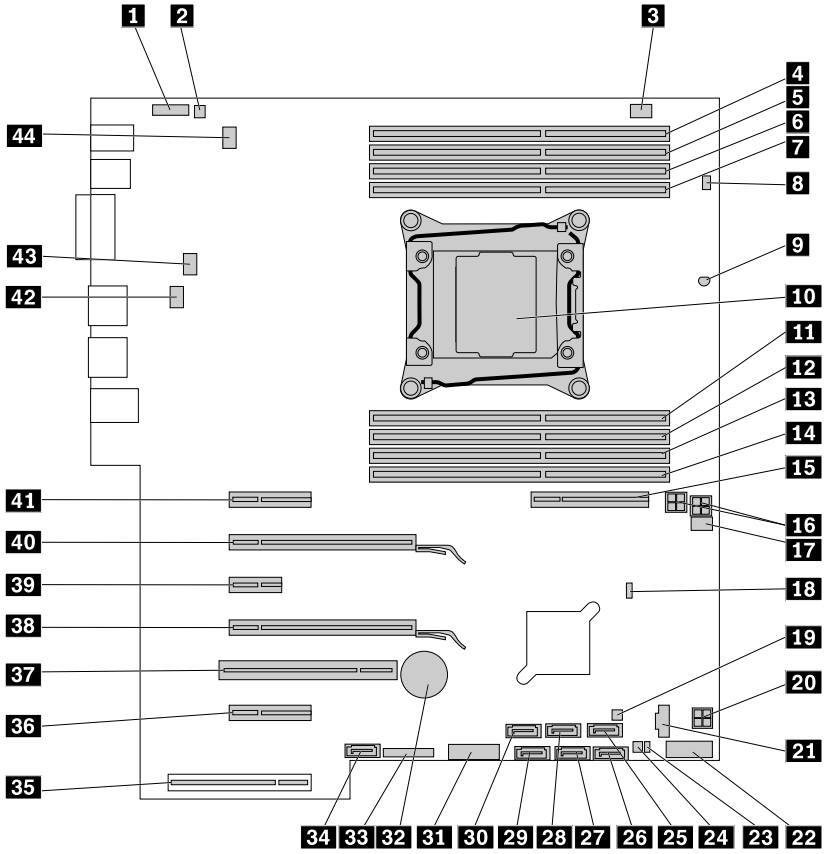

Figure 5. System board part locations

1 Front audio connector	2 Internal speaker connector
3 Optical drive fan connector	4 Memory slot
5 Memory slot	6 Memory slot
7 Memory slot	8 Cover presence switch connector (Intrusion switch connector)
9 Thermal sensor	10 Microprocessor
11 Memory slot	12 Memory slot
13 Memory slot	14 Memory slot
15 Flex adapter slot	16 4-pin power connectors (2)
17 Front fan connector	18 Clear CMOS (Complementary Metal Oxide Semiconductor) /Recovery jumper
19 Front-access storage enclosure control connector	20 4-pin power connector
21 Thunderbolt™ connector	22 Front USB connector
23 Hard disk drive activity indicator connector (used only with a 9364 RAID card)	24 Front-access storage enclosure control connector
25 SATA 3.0 connector	26 SATA 3.0 connector
27 SATA 3.0 connector	28 SATA 3.0 connector

29 SATA 3.0 connector	30 SATA 3.0 connector
31 29-in-1 card reader connector	32 Battery
33 Front panel connector	34 eSATA connector
35 Power supply connector	36 PCI Express 2.0 x4 card slot
37 PCI card slot	38 PCI Express 3.0 x16 graphics card slot
39 PCI Express 2.0 x1 slot	40 PCI Express 3.0 x16 graphics card slot
41 PCI Express 3.0 x4 card slot	42 Rear fan connector
43 Microprocessor fan connector	44 Rear fan connector

ThinkStation P700

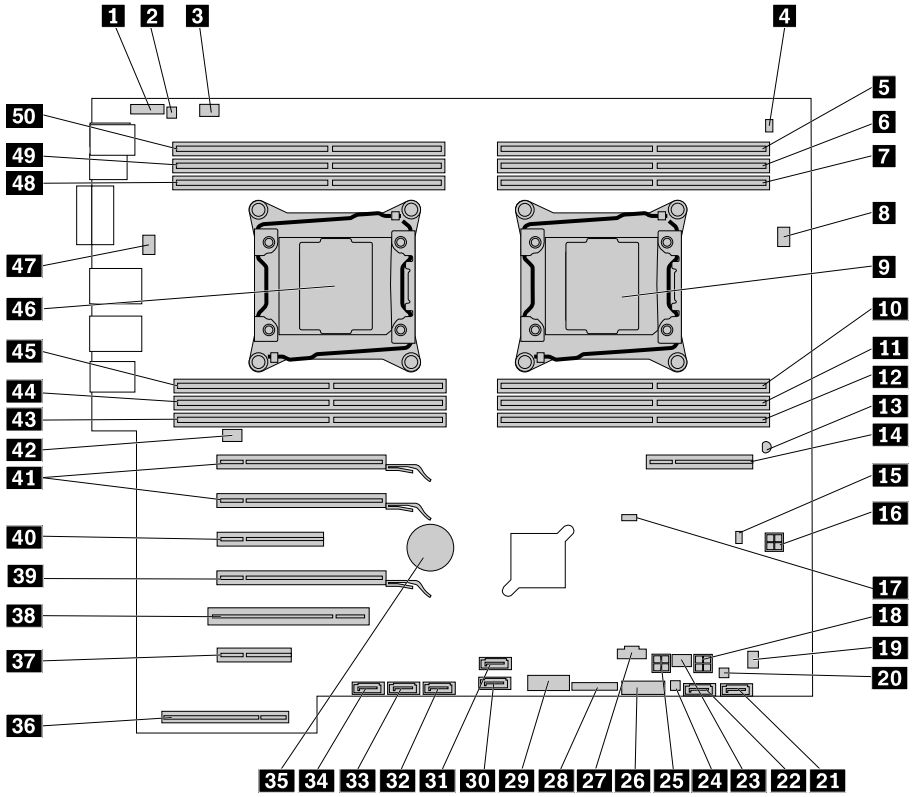

Figure 6. System board part locations

1 Front audio connector	2 Internal speaker connector
3 Rear fan connector	4 Cover presence switch connector (Intrusion switch connector) (available on some models)
5 Memory slot	6 Memory slot
7 Memory slot	8 Microprocessor fan connector 1
9 Microprocessor 1	10 Memory slot
11 Memory slot	12 Memory slot
13 Thermal sensor	14 Flex adapter slot

15 Internal-storage-drive activity indicator connector (used only with a 9364 RAID card)	16 4-pin power connector
17 Clear CMOS (Complementary Metal Oxide Semiconductor) /Recovery jumper	18 4-pin power connector
19 Optical-drive fan connector	20 Front-access storage enclosure control connector
21 SATA 3.0 connector	22 SATA 3.0 connector
23 Front fan connector	24 Front-access storage enclosure control connector
25 4-pin power connector	26 29-in-1 card reader connector
27 Thunderbolt connector	28 Front panel connector
29 Front USB 3.0 connector	30 SATA 3.0 connector
31 eSATA connector	32 SATA 3.0 connector
33 SATA 3.0 connector	34 SATA 3.0 connector
35 Battery	36 Power supply connector
37 PCI Express 2.0 x4 card slot	38 PCI card slot
39 PCI Express 3.0 x16 graphics card slot	40 PCI Express 3.0 x8 slot
41 PCI Express 3.0 x16 graphics card slots (2)	42 Rear fan connector
43 Memory slot	44 Memory slot
45 Memory slot	46 Microprocessor 2
47 Microprocessor fan connector 2	48 Memory slot
49 Memory slot	50 Memory slot

Locating internal drives

Internal drives are devices that your computer uses to read and store data. You can add drives to your computer to increase storage capacity and enable your computer to read other types of media. Internal drives are installed in bays.

When you install or replace an internal drive, note the type and size of the drive that each bay supports and correctly connect the required cables. Refer to the appropriate section in “Installing or replacing hardware” on page 75 for instructions on how to install or replace internal drives for your computer.

The following illustration shows the locations of the drive bays.

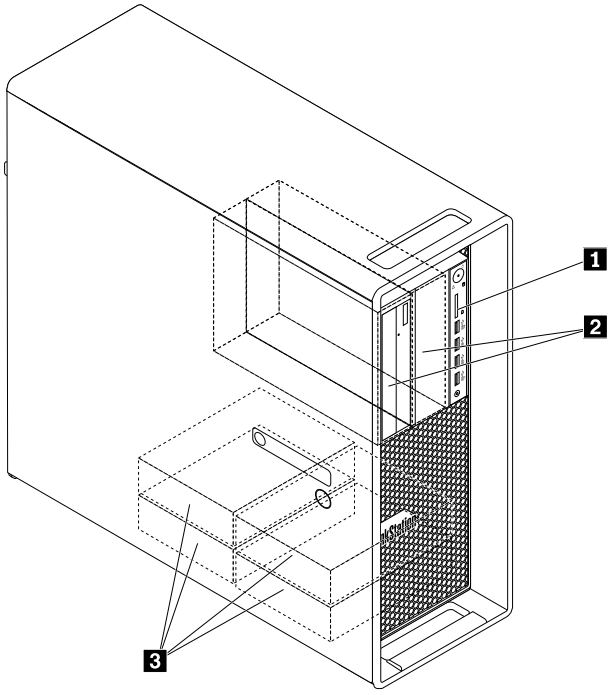

Figure 7. Drive bay locations

1 Card reader (for an SD card)
2 Optical drive bays (2) (for an optical drive, a flex module, or a front-access storage enclosure)
3 Storage drive bays (4) (for a hard disk drive, a hybrid drive, or a solid-state drive)

Locating the machine type and model label

The machine type and model label identifies your computer. When you contact Lenovo for help, the machine type and model information helps support technicians to identify your computer and provide faster service.

The machine type and model label is attached on the front of your computer as shown.

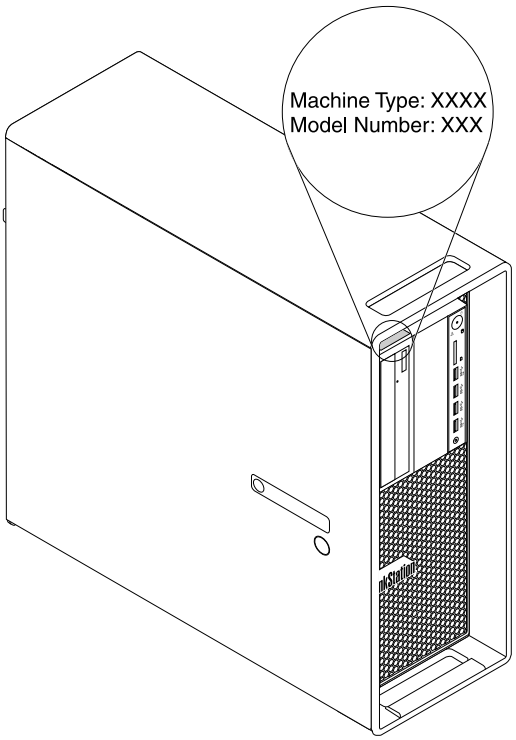

Figure 8. Machine type and model label

Features

This section introduces the computer features. The information covers a variety of models.

Microprocessor

To view the microprocessor information of your computer, do the following:

- On the Microsoft Windows 7 operation system, click **Start**, right-click **Computer**, and select **Properties** to view the information.
- On the Microsoft Windows 8.1 operating system, go to the desktop and move your pointer to the top-right or bottom-right corner of the screen to display the charms. Then click **Settings → PC info** to view the information.
- On the Microsoft Windows 10 operating system, click the Start button to open the Start menu. Then, click **Settings → System → About** to view the information.

Memory

To determine the amount of memory installed on your computer, do the following:

- On the Microsoft Windows 7 operation system, click **Start**, right-click **Computer**, and select **Properties** to view the information.

- On the Microsoft Windows 8.1 operating system, go to the desktop and move your pointer to the top-right or bottom-right corner of the screen to display the charms. Then click **Settings → PC info** to view the information.
- On the Microsoft Windows 10 operating system, click the Start button to open the Start menu. Then, click **Settings → System → About** to view the information.
- For ThinkStation P500: Up to eight double data rate 4 (DDR4) error correction code (ECC) unbuffered dual inline memory modules (UDIMMs), DDR4 ECC registered DIMMs (RDIMMs), or DDR4 ECC load-reduced DIMMs (LRDIMMs).
- For ThinkStation P700: Up to 12 DDR4 ECC UDIMMs, DDR4 ECC RDIMMs, or DDR4 ECC LRDIMMs.

For more information, see “Installing or replacing a memory module” on page 135.

Internal drives

- Card reader
- Hard disk drive
- Hybrid drive (available on some models)
- Optical drive (available on some models)
- Solid-state drive (available on some models)

Video features

- PCI Express x16 graphics card slots on the system board for a discrete graphics card
- Video connectors on a discrete graphics card:
  - DVI connector (available on some models)
  - DisplayPort connector (available on some models)
  - Mini DisplayPort connector (available on some models)

Audio features

- Integrated audio controller supports the following connectors and devices on your computer:
  - Audio line-in connector
  - Audio line-out connector
  - Headset connector
  - Internal speaker
  - Microphone connectors

Input/Output (I/O) features

- 100/1000 Mbps Ethernet connector
- 9-pin serial connector
- Audio connectors (audio line-in connector, audio line-out connector, microphone connector, and headset connector)
- Display connectors (DisplayPort connector, DVI connector, and Mini DisplayPort connector) (vary by graphics card)
- PS/2 keyboard connector
- PS/2 mouse connector
- USB connectors

For more information, see “Locating connectors, controls, and indicators on the front of your computer” on page 2 and “Locating connectors on the rear of your computer” on page 2.

Expansion

- Card reader slot
- Hard disk drive bays
- Flex adapter slot
- Memory slots
- Optical drive bays
- PCI card slot
- PCI Express x1 card slot (available on ThinkStation P500 only)
- PCI Express x4 card slots
- PCI Express x8 card slots
- PCI Express x16 graphics card slots

For more information, see “Locating internal drives” on page 10 and “Locating parts on the system board” on page 6.

Power supply

Your computer comes with one of the following power supplies:

- 490-watt automatic voltage-sensing power supply
- 650-watt automatic voltage-sensing power supply
- 850-watt automatic voltage-sensing power supply

System management features

- Ability to store power-on self-test (POST) hardware test results
- Desktop Management Interface (DMI)

  Desktop Management Interface provides a common path for users to access information about all aspects of a computer, including processor type, installation date, attached printers and other peripherals, power sources, and maintenance history.
- ErP LPS compliance mode

  The energy-related products directive (ErP) lowest power state (LPS) compliance mode reduces the consumption of electricity when your computer is in sleep or off mode. For more information, see “Enabling ErP LPS compliance mode” on page 40.
- Intel® Standard Manageability (ISM)

  Intel Standard Manageability is hardware and firmware technology that builds certain functionality into computers in order to make them easier and less expensive for businesses to monitor, maintain, update, upgrade, and repair.
- Intel Active Management Technology (AMT)

  Intel Active Management Technology is a hardware and firmware technology that builds certain functionality into computers in order to make them easier and less expensive for businesses to monitor, maintain, update, upgrade, and repair.
- Intel Rapid Storage Technology enterprise (RSTe)

  Intel RSTe is a device driver that provides support for SATA or SAS RAID 0, 1, 5, and 10 arrays on specific Intel chipset system boards to enhance hard disk drive performance.

- Preboot Execution Environment (PXE)

  The Preboot Execution Environment is an environment to start computers using a network interface independent of data storage devices (such as the hard disk drive) or installed operating systems.
- System Management (SM) Basic Input/Output System (BIOS) and SM software

  The SM BIOS specification defines data structures and access methods in a BIOS that allows a user or application to store and retrieve information specific about the computer in question.
- Wake on LAN

  Wake on LAN is an Ethernet computer networking standard that allows a computer to be turned on or woken up by a network message. The message is usually sent by a program running on another computer on the same local area network.
- Windows Management Instrumentation (WMI)

  Windows Management Instrumentation is a set of extensions to the Windows Driver Model. It provides an operating system interface through which instrumented components provide information and notification.

Security features

- Ability to enable and disable a device
- Ability to enable and disable USB connectors individually
- Computrace Agent software embedded in firmware
- Cover presence switch (also called intrusion switch)
- Keyboard with fingerprint reader (shipped with some models)
- Power-on Password (POP), administrator password, and Hard Disk Password to deter unauthorized use of your computer
- Startup sequence control
- Startup without keyboard or mouse
- Support for a Kensington-style cable lock
- Support for a padlock
- Trusted Platform Module (TPM)

For more information, see Chapter 4 “Security” on page 33.

Preinstalled operating system

Your computer is preinstalled with one of the following operating systems:

- Windows 7
- Windows 8.1
- Windows 10

Operating systems, certified or tested for compatibility (varies by model type)

The operating systems listed here are being certified or tested for compatibility at the time this publication goes to press. Additional operating systems might be identified by Lenovo as compatible with your computer following the publication of this manual. This list is subject to change. To determine if an operating system has been certified or tested for compatibility, check the Web site of the operating system vendor.

- Linux®

Specifications

This section lists the physical specifications for your computer.

Dimensions

Width: 175 mm (6.89 inches)

Height: 446 mm (17.56 inches)

Depth: 485 mm (19.09 inches)

Weight

Maximum configuration as shipped: 24 kg (52.91 lb)

Environment

- Air temperature:

  Operating: From 10°C (50°F) to 35°C (95°F)

  Storage in original shipping package: From -40°C (-40°F) to 60°C (140°F)

  Storage without package: From -10°C (14°F) to 60°C (140°F)
- Humidity:

  Operating: 20%–80% (non-condensing)

  Storage: 20%–90% (non-condensing)
- Altitude:

  Operating: From -15.2 m (-50 ft) to 3048 m (10 000 ft)

  Storage: From -15.2 m (-50 ft) to 10 668 m (35 000 ft)

Electrical input

Input voltage: From 100 V ac to 240 V ac

Input frequency: 50/60 Hz

Lenovo programs

Your computer comes with Lenovo programs to help you work more easily and securely. Depending on the Windows operating system preinstalled, the programs might vary.

Accessing a program on your computer

Note: For Windows 7, some of the Lenovo programs might be ready to be installed, so you need to install them manually. Then, you can access and use these programs. To install such a program, open the Lenovo ThinkVantage® Tools program, and then click **View → Tiles** to view the program icons. Follow the instructions under greyed-out icons to locate the icon for the desired program. Double-click the icon to install the program.

To access a program on your computer, do one of the following:

- For Windows 7 or Windows 10:
  - From Windows Search:
    1. Depending on your Windows version, do one of the following:
       - For Windows 7: Click the Start button to open the Start menu, and then type the program name into the search box.
       - For Windows 10: Type the program name into the search box next to the Start button.

2. In the search results, click the name of the desired program to launch the program.

– From the Start menu or Control Panel:

1. Click the Start button to open the Start menu. Then, click the name of the desired program to launch the program.
2. If the program name is not displayed, click **All Programs** for Windows 7 or **All apps** for Windows 10 to display the program list. From the list or a folder in the list, click the name of the desired program to launch the program.
3. If the program name is not displayed on the Start menu, access the program from Control Panel.
   a. Depending on your Windows version, do one of the following:
      – For Windows 7: Click **Control Panel** on the Start menu.
      – For Windows 10: Right-click the Start button to open the Start context menu, and then click **Control Panel**.
   b. View Control Panel by Large icons or Small icons, and then click the name of the desired program to launch the program.

- For Windows 8.1:
  1. Press the Windows key to go to the Start screen. Click the name of the desired program to launch the program.
  2. If you cannot find the program you need, click the arrow icon in the bottom-left corner of the screen to go to the Apps screen. Find the desired program in the apps list or search for it from the search box in the top-right corner of the screen.

An introduction to Lenovo programs

This topic provides a brief introduction to some Lenovo programs.

Note: Depending on your computer model, some of the programs might not be available.

- **Fingerprint Manager Pro or ThinkVantage Fingerprint Software (for Windows 7 and Windows 8.1)**

  The integrated fingerprint reader provided on some keyboards enables you to enroll your fingerprint and associate it with your power-on password, hard disk password, and Windows password. As a result, fingerprint authentication can replace passwords and enable simple and secure user access. A fingerprint reader keyboard is available with select computers or can be purchased for computers that support this option.

- **Lenovo ID (for Windows 10)**

  The Lenovo ID program enables you to create your Lenovo ID and access all supported Lenovo programs and web portals with single sign-on.

- **Lenovo Device Experience or Lenovo PC Experience (for Windows 10)**

  The Lenovo Device Experience or Lenovo PC Experience program helps you work more easily and securely. The program provides easy access to Lenovo ThinkVantage Tools or Lenovo Tools, important settings and information about your computer, the Lenovo Support Web site, and so on.

- **Lenovo Companion (for Windows 8.1 and Windows 10)**

  Your computer's best features and capabilities should be easy to access and understand. With Lenovo Companion, they are. Use Lenovo Companion to do the following:

  – Optimize your computer's performance, monitor your computer's health, and manage system updates.
  – Access your user guide, check warranty status, and view accessories customized for your computer.
  – Read how-to articles, explore Lenovo forums, and stay up-to-date on technology news with articles and blogs from trusted sources.

Lenovo Companion is filled with exclusive Lenovo content to help you learn more about what you can do with your computer.

- **REACHit or Lenovo Reach (for Windows 7, Windows 8.1 and Windows 10)**

  The REACHit or Lenovo Reach program enhances your cloud experience. This program keeps you connected at all times and enables you to access all your favorite items from personal computers, smartphones, or tablets. As a result, you can access, edit, and share your files from anywhere. You also can add your favorite Web services to your cloud desktop and stay logged-in to Web sites with the cloud password manager.

- **SHAREit or Lenovo SHAREit (for Windows 7, Windows 8.1 and Windows 10)**

  The SHAREit or Lenovo SHAREit program provides a quick and easy way to share files and folders among computers, smartphones, tablets, or smart TVs with the Android or the Windows operating system installed. SHAREit or Lenovo SHAREit uses any type of network or even no network at all to share files and folders.

- **Lenovo Solution Center (for Windows 7, Windows 8.1 and Windows 10)**

  The Lenovo Solution Center program enables you to troubleshoot and resolve computer problems. It combines diagnostic tests, system information collection, security status, and support information, along with hints and tips for maximum system performance.

- **Lenovo Support (for Windows 8.1)**

  The Lenovo Support program enables you to register your computer with Lenovo and check the computer health condition and battery status. The program also enables you to download and view user manuals for your computer, get the warranty information, and explore help and support information.

- **Lenovo ThinkVantage Tools (for Windows 7)**

  The Lenovo ThinkVantage Tools program provides easy access to various tools to help you work more easily and securely.

- **Lenovo Tools (for Windows 8.1)**

  The Lenovo Tools program guides you to a host of information sources and provides easy access to various tools to help you work more easily and securely.

- **Recovery Media (for Windows 7)**

  The Recovery Media program enables you to restore the contents of the hard disk drive to the factory-default settings.

- **Rescue and Recovery (for Windows 7)**

  The Rescue and Recovery program is a one-button recovery and restore solution. It includes a set of self-recovery tools to help you diagnose computer problems, get help, and recover from system crashes, even if you cannot start the Windows operating system.

- **System Update (for Windows 7 and Windows 8.1)**

  The System Update program helps you keep the software on your computer up-to-date by downloading and installing software update packages. Examples of these software update packages include Lenovo programs, device drivers, UEFI BIOS updates, and other third-party programs.

Chapter 2. Using your computer

This chapter provides information about the following topics:

- “Registering your computer” on page 19
- “Using Windows shortcut keys” on page 19
- “Using fingerprint authentication” on page 19
- “Using the wheel mouse” on page 20
- “Setting the computer volume” on page 21
- “Using a disc” on page 21
- “Navigating among screens on the Windows 8.1 operating system” on page 22
- “Accessing Control Panel on the Windows 8.1 operating system” on page 24
- “Frequently asked questions” on page 24

Registering your computer

When you register your computer with Lenovo, you enter required information into a Lenovo database. The information enables Lenovo to contact you when there is a recall or other severe problem and provide quicker service when you call Lenovo for help. In addition, some locations offer extended privileges and services to registered users.

To register your computer with Lenovo, go to http://www.lenovo.com/register and follow the instructions on the screen.

Using Windows shortcut keys

Both the standard keyboard and the fingerprint reader keyboard provide three special shortcut keys that you can use with your Microsoft Windows operating system.

- The two Windows logo keys are located beside the Alt key on either side of the spacebar. On the Windows 7 or Windows 10 operating system, press the Windows logo key to open the Start menu. On the Windows 8.1 operating system, press the Windows logo key to switch between the current workspace and the Start screen. The style of the Windows logo varies depending on the keyboard type.
- The context-menu key is located next to the Ctrl key on the right side of the Spacebar. Pressing the context-menu key opens the context menu for the active program, icon, or object.

Note: You can use the mouse or the Up and Down arrow keys to highlight menu selections.

Using fingerprint authentication

If your keyboard has a fingerprint reader, you can use fingerprint authentication to replace passwords for simple and secure user access. To use fingerprint authentication, first enroll your fingerprints and associate them with your passwords (such as the power-on password, hard disk password, and Windows password). Use the fingerprint reader and the fingerprint program to complete this procedure.

To use fingerprint authentication, do one of the following:

© Copyright Lenovo 2014, 2015

- For Windows 7 or Windows 8.1: Use the Fingerprint Manager Pro or ThinkVantage Fingerprint Software program provided by Lenovo. To open the program, see “Accessing a program on your computer” on page 15. For more information about using the program, refer to the help system of the program.
- For Windows 10: Use the fingerprint tool provided by Windows. Click the Start button to open the Start menu, and then click **Settings → Accounts → Sign-in options**. Follow the instructions on the screen.

To use the fingerprint reader, refer to the documentation shipped with the fingerprint keyboard or located on the Lenovo Support Web site at http://www.lenovo.com/support/keyboards.

Using the wheel mouse

The wheel mouse has the following controls:

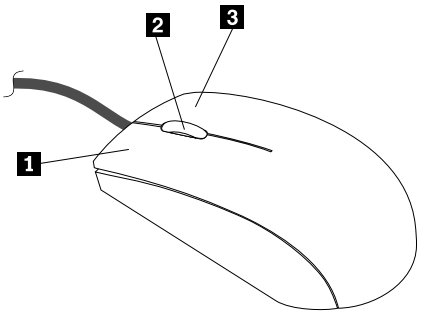

1 Primary mouse button: Use this button to select or start a program or menu item.

2 Wheel: Use the wheel to control the scrolling action of the mouse. The direction in which you rotate the wheel controls the direction of the scrolling action.

3 Secondary mouse button: Use this button to display a menu for the active program, icon, or object.

You can switch the function of the primary and secondary mouse buttons and change other default behavior through the Mouse Properties window. To open the Mouse Properties window, go to Control Panel, view Control Panel by large icons or small icons, and then click **Mouse**.

Managing power

Power management reduces the power consumption of certain components of the computer such as the system power supply, processor, hard disk drives, and some monitors.

Advanced configuration and power interface (ACPI) BIOS

Being an ACPI BIOS system, the operating system is allowed to control the power management features of the computer and the setting for Advanced Power Management (APM) BIOS mode is ignored. Not all operating systems support ACPI BIOS mode.

Automatic Power-on features

The Automatic Power-On features within the Power Management menu allow you to enable and disable features that turn on the computer automatically.

- **Wake Up on Alarm**: You can specify a date and time at which the computer will be turned on automatically. This can be either a single event or a daily event.
- **Wake on LAN**: If the computer has a properly configured token-ring or Ethernet LAN adapter card that is Wake on LAN-enabled and there is remote network management software, you can use the Wake on LAN

feature. When you set Wake on LAN to **Enabled**, the computer will turn on when it receives a specific signal from another computer on the local area network (LAN).

To enable the Wake on LAN function or the Wake Up on Alarm function on the Windows 8.1 operating system, do the following:

1. Open Control Panel.
2. Click **Hardware and Sound → Power Options**.
3. In the left panel, click **Choose what the power button does**.
4. In the **Shutdown setting** section, clear **Turn on fast startup**.

   Note: If the settings are unavailable, click **Change settings that are currently unavailable**.
5. Click **Save changes**.

Setting the computer volume

To set the computer volume, do the following:

1. Click the volume icon in the Windows notification area on the taskbar.

   Note: If the volume icon is not displayed in the Windows notification area, add the icon to the notification area. See Windows help system. For more information, see “Windows help system” on page 153.
2. Follow the instructions on the screen and the hover text to adjust the volume, mute the speaker, or unmute the speaker.

Using a disc

This section provides information about the following topics:

- “Using the optical drive” on page 21
- “Handling and storing a disc” on page 22
- “Playing and removing a disc” on page 22
- “Recording a disc” on page 22

Using the optical drive

Depending on the model, your computer is equipped with one of the following optical drives:

- CD-ROM drive: Used to read CDs only.
- DVD-ROM drive: Used to read DVDs and CDs.
- BD-ROM drive: Used to read blu-ray discs (BDs), DVDs, and CDs.
- Recordable optical drive: Used to read and record a disc.

When using the optical drive, follow these guidelines:

- Do not place the computer in a location where the drive is exposed to any of the following conditions:
  - High temperature
  - High humidity
  - Excessive dust
  - Excessive vibration or sudden shock
  - An inclined surface

  - Direct sunlight
- Do not insert any object other than a disc into the drive.
- Do not insert damaged discs into the drive. Warped, scratched, or dirty discs can damage the drive.
- Before moving the computer, remove the disc from the drive.

Handling and storing a disc

When handling and storing a disc, follow these guidelines:

- Hold the disc by its edges. Do not touch the surface of the side that is not labeled.
- To remove dust or fingerprints, wipe the disc with a clean, soft cloth from the center to the outside. Wiping the disc in a circular direction might cause loss of data.
- Do not write or stick paper on the disc.
- Do not scratch or mark the disc.
- Do not place or store the disc in direct sunlight.
- Do not use benzene, thinners, or other cleaners to clean the disc.
- Do not drop or bend the disc.

Playing and removing a disc

To play a disc, do the following:

1. With the computer on, press the eject/close button on the front of the optical drive. The tray slides out of the drive.
2. Insert a disc into the tray. Some optical drive has a snap hub in the center of the tray. If your drive has a snap hub, support the tray with one hand and then push center of the disc until it snaps into place.
3. Press the eject/close button again or gently push the tray forward to close the tray. The disc player program starts automatically. For more information, refer to the help system of the disc player program.

To remove a disc from the optical drive, do the following:

1. With the computer on, press the eject/close button on the front of the optical drive. The tray slides out of the drive.
2. Carefully remove the disc from the tray.
3. Press the eject/close button again or gently push the tray forward to close the tray.

Note: If the tray does not slide out of the drive when you press the eject/close button, turn off your computer. Then, insert a straightened paper clip into the emergency-eject hole adjacent to the eject/close button. Use the emergency eject only in an emergency.

Recording a disc

If your optical drive supports recording, you can record a disk by do the following:

1. Insert a recordable disc into the optical drive that supports recording.
2. Open the PowerDVD Create, PowerProducer, or Power2Go program. See “Accessing a program on your computer” on page 15.
3. Follow the instructions on the screen.

Navigating among screens on the Windows 8.1 operating system

To navigate among the desktop, the Start screen, and applications opened from the Start screen on the Windows 8.1 operating system, do one of the following:

- From the Start screen, do one of the following to navigate to the most recently accessed workspace (application, setting, or desktop):
  - Using a pointing device: Move the pointer to the extreme bottom-left corner of the screen until the Windows Start-screen control is displayed; then click the icon.
  - Using a touch screen: Swipe in and out on the left edge of the screen. Representations of all available workspaces are displayed along the left edge of the screen. Tap the Windows Start-screen control at the bottom.

    Note: The Windows Start-screen control is displayed only when you have at least one active workspace in the background of the system.
- From the desktop or any other workspace that is opened from the Start screen, do one of the following to navigate to the Start screen:
  - Using a pointing device:
    - From the desktop, click the Windows Start-screen control in the bottom-left corner of the screen.
    - From any other workspace, move the pointer to the extreme bottom-left corner of the screen until the Windows Start-screen control is displayed; then click the icon.
  - Using a touch screen: Do one of the following:
    - From the desktop, tap the Windows Start-screen control in the bottom-left corner of the screen.
    - From any other workspace, do one of the following:
      - Swipe in and out on the left edge of the screen. Representations of all available workspaces are displayed along the left edge of the screen. Tap the Windows Start-screen control at the bottom.
      - Swipe in from the right edge of the screen to display the charms; then tap **Start**.
- From any workspace (Start screen, desktop, PC settings, or application opened from the Start screen), go to another previously-opened workspace using any of the following procedures:
  - To navigate to a previously accessed workspace (application, setting, or desktop), do one of the following:
    - Using a pointing device:
      1. Do one of the following:
         - Move the pointer to the extreme top-left corner of the screen and then move the pointer downward along the left edge of the screen.
         - Move the pointer to the extreme bottom-left corner of the screen and then move the pointer upward along the left edge of the screen.

         Representations of all available workspaces are displayed along the left edge of the screen.

         Note: Only active workspaces that you have accessed during the current Windows session are displayed along the left edge. If you close an active workspace, its representation will not be displayed along the left edge of the screen.
      2. Click the representation.
    - Using a touch screen:
      - Method 1
        1. Swipe in and out on the left edge of the screen. Representations of all available workspaces are displayed along the left edge of the screen.
        2. Tap the desired workspace.

- Method 2
  1. Swipe in from the left edge of the screen to navigate to the next available workspace.
  2. Repeat step 1 until you navigate to the desired workspace.

– To navigate to the most recently accessed workspace (application, PC settings, or desktop), do one of the following:
  – Using a pointing device: Move the pointer to the extreme top-left corner of the screen until the Windows Start-screen control is displayed; then click the icon.
  – Using a touch screen: Swipe in from the left edge of the screen.

For information about using other features of the Windows 8.1 operating system, open the **Help+Tips** application from the Start screen or Apps screen, or refer to the Windows help system. For more information, see “Windows help system” on page 153.

Accessing Control Panel on the Windows 8.1 operating system

On the Windows operating system, you can view and change computer settings through Control Panel. To access Control Panel on the Windows 8.1 operating system, do one of the following:

- From the desktop
  1. Move the pointer to the top-right or bottom-right corner of the screen to display the charms.
  2. Click **Settings**.
  3. Click **Control Panel**.
- From the Start screen
  1. Click the down arrow in the bottom-left corner of the screen to go to the Apps screen.
  2. Scroll to the right side, and click **Control Panel** in the **Windows System** section.

Frequently asked questions

The following are some of the frequently asked questions and their answers. The answers can help you optimize the use of your computer.

For the answers to more frequently asked questions about using your computer, go to:
http://www.lenovo.com/support/faq

How can I get my user guide in another language?

The user guide is available in various languages at:
http://www.lenovo.com/UserManuals

Where is my recovery disc set or recovery USB key?

Depending on your Windows version, your computer might come with a recovery disc set or recovery USB key. If your computer does not come with it, contact the Lenovo Customer Support Center to order a recovery disc set or recovery USB key. For a list of Lenovo Support phone numbers, go to http://www.lenovo.com/support/phone. If you cannot find the support telephone number for your country or region, contact your Lenovo reseller.

Where can I find help about the Windows operating system?

See “Windows help system” on page 153.

How can I restore my computer settings?

Your computer provides a program that enables you to restore the computer settings. For more information, see Chapter 8 “Recovery information” on page 67.

Additionally, in case of a hard-disk-drive failure, you can order a recovery disc set from the Lenovo Customer Support Center. For information about contacting the Customer Support Center, see Chapter 10 “Getting information, help, and service” on page 153. Before using the recovery disc set, refer to the documentation that comes with the disc set.

Note: A recovery disc set might contain multiple discs. Ensure that you have all of the discs ready before starting the recovery process. During the recovery process, you might be prompted to change discs.

How can I change the Windows 8.1 startup behavior to open either the desktop or the Start screen?

On the Windows 8.1 operating system, you can set the computer to open either the desktop or the Start screen by default. To set the default startup screen, do the following:

1. On the desktop, right-click on the taskbar at the bottom of the screen.
2. Click **Properties**. The “Taskbar and Navigation properties” window is displayed.
3. On the **Navigation** tab, locate the **Start screen** section, and then do one of the following:
   - To set the desktop as your default startup screen, select **When I sign in or close all apps on a screen, go to the desktop instead of Start**.
   - To set the Start screen as your default startup screen, clear the **When I sign in or close all apps on a screen, go to the desktop instead of Start** check box.
4. Click **OK** to save the new setting.

Chapter 3. You and your computer

This chapter provides information about accessibility, comfort, and relocating your computer to other countries or regions.

Accessibility and comfort

Good ergonomic practice is important to get the most from your personal computer and to avoid discomfort. Arrange your workplace and the equipment you use to suit your individual needs and the kind of work that you perform. In addition, use healthy work habits to maximize your performance and comfort while using your computer.

The following topics provide information about arranging your work area, setting up your computer equipment, and establishing healthy work habits.

Arranging your workspace

To get the most from your computer, arrange both the equipment you use and your work area to suit your needs and the kind of work you do. Your comfort is of foremost importance, but light sources, air circulation, and the location of electrical outlets can also affect the way you arrange your workspace.

Comfort

Although no single working position is ideal for everyone, here are a few guidelines to help you find a position that suits you best.

Sitting in the same position for a long time can cause fatigue. The backrest and seat of your chair should adjust independently and provide good support. The seat should have a curved front to relieve pressure on the thighs. Adjust the seat so that your thighs are parallel to the floor and your feet are either flat on the floor or on a footrest.

When using the keyboard, keep your forearms parallel to the floor and your wrists in a comfortable position. Use a light touch on the keyboard and your hands and fingers relaxed. Change the angle of the keyboard for maximum comfort by adjusting the position of the keyboard feet.

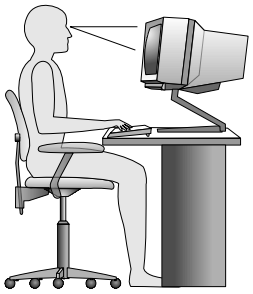

Adjust the monitor so the top of the screen is at, or slightly below, eye level. Place the monitor at a comfortable viewing distance, usually 51–61 cm (20–24 inches). Then, position the monitor so that you can view it without twisting your body. Also, position other equipment you use regularly, such as the telephone or a mouse, within easy reach.

© Copyright Lenovo 2014, 2015

Glare and lighting

Position the monitor to minimize glare and reflections from overhead lights, windows, and other light sources. Reflected light from shiny surfaces can cause annoying reflections on your monitor screen. Place the monitor at right angles to windows and other light sources, when possible. Reduce overhead lighting, if necessary, by turning off lights or using lower wattage bulbs. If you install the monitor near a window, use curtains or blinds to block the sunlight. You can adjust the brightness and contrast controls on the monitor as the room lighting changes throughout the day.

Where it is impossible to avoid reflections or to adjust the lighting, an antiglare filter placed over the screen might be helpful. However, these filters might affect the clarity of the image on the screen; try them only after you have exhausted other methods of reducing glare.

Dust buildup compounds problems associated with glare. Remember to clean your monitor screen periodically using a soft cloth as directed in your monitor documentation.

Air circulation

Your computer and monitor produce heat. The computer has a fan that pulls in fresh air and forces out hot air. The monitor lets hot air escape through vents. Blocking the air vents can cause overheating, which might result in a malfunction or damage. Place the computer and monitor so that nothing blocks the air vents; usually, 51 mm (2 inches) of air space is sufficient. Also, ensure that the vented air is not blowing on people.

Electrical outlets and cable lengths

The following factors might determine the final placement of your computer:

- Location of electrical outlets
- Length of power cords
- Length of the cables that are connected to the monitor and other devices

When arranging your workspace:

- Avoid the use of extension cords. When possible, plug the computer power cord directly into an electrical outlet.
- Keep power cords and cables neatly routed away from walkways and other areas where they might get kicked accidentally.

For more information about power cords, see “Power cords and power adapters” on page vi.

Accessibility information

Lenovo is committed to providing users who have hearing, vision, and mobility limitations with greater access to information and technology. This section provides information about the ways these users can get the most out of their computer experience. You also can get the most up-to-date accessibility information from the following Web site:
http://www.lenovo.com/accessibility

Keyboard shortcuts

The following table contains keyboard shortcuts that can help make your computer easier to use.

Note: Depending on your keyboard, some of the following keyboard shortcuts might not be available.

Keyboard shortcut	Function
Windows logo key + U	Open Ease of Access Center
Right Shift for eight seconds	Turn on or turn off Filter Keys
Shift five times	Turn on or turn off Sticky Keys
Num Lock for five seconds	Turn on or turn off Toggle Keys
Left Alt+Left Shift+Num Lock	Turn on or turn off Mouse Keys
Left Alt+Left Shift+PrtScn (or PrtSc)	Turn on or turn off High Contrast

For more information, go to http://windows.microsoft.com/, and then perform a search using any of the following keywords: keyboard shortcuts, key combinations, shortcut keys.

Ease of Access Center

Ease of Access Center on the Windows operating system enables users to configure their computers to suit their physical and cognitive needs.

To use Ease of Access Center, do the following:

1. Depending on your Windows version, do one of the following:
   - For Windows 7: Click the Start button to open the Start menu, and then click **Control Panel**. View Control Panel by Large icons or Small icons, and then click **Ease of Access Center**.
   - For Windows 8.1: Move the pointer to the top-right or bottom-right corner of the screen to display the charms. Then, click **Settings → Change PC settings → Ease of Access**.
   - For Windows 10: Click the Start button to open the Start menu. Then, click **Settings → Ease of Access**.
2. Choose the appropriate tool by following the instructions on the screen.

Ease of Access Center mainly includes the following tools:

- Magnifier

  Magnifier is a useful utility that enlarges the entire screen or part of the screen so that you can see the items better.
- Narrator

  Narrator is a screen reader that reads aloud what is displayed on the screen and describes events such as error messages.
- On-Screen Keyboard

  If you prefer to type or enter data into your computer using a mouse, joystick, or other pointing device instead of a physical keyboard, you can use On-Screen Keyboard. On-Screen Keyboard displays a visual keyboard with all the standard keys.
- High Contrast

  High Contrast is a feature that heightens the color contrast of some text and images on your screen. As a result, those items are more distinct and easier to identify.
- Personalized keyboard

  Adjust keyboard settings to make your keyboard easier to use. For example, you can use your keyboard to control the pointer and type certain key combinations easier.
- Personalized mouse

  Adjust mouse settings to make your mouse easier to use. For example, you can change the pointer appearance and make it easier to manage windows with the mouse.

Speech Recognition

Speech Recognition enables you to control your computer by voice.

Using only your voice, you can start programs, open menus, click objects on the screen, dictate text into documents, and write and send e-mails. Everything you do with the keyboard and mouse can be done with only your voice.

To use Speech Recognition, do the following:

1. Depending on your Windows version, do one of the following:
   - For Windows 7: Click the Start button to open the Start menu, and then click **Control Panel**.
   - For Windows 8.1: Open Control Panel. See "Accessing Control Panel on the Windows 8.1 operating system" on page 24.
   - For Windows 10: Right-click the Start button to open the Start context menu, and then click **Control Panel**.
2. View Control Panel using Large icons or Small icons, and then click **Speech Recognition**.
3. Follow the instructions on the screen.

Screen-reader technologies

Screen-reader technologies are primarily focused on software program interfaces, help information systems, and various online documents. For additional information about screen readers, see the following:

- Using PDFs with screen readers:
  http://www.adobe.com/accessibility.html?promoid=DJGVE
- Using the JAWS screen reader:
  http://www.freedomscientific.com/jaws-hq.asp
- Using the NVDA screen reader:
  http://www.nvaccess.org/

Screen resolution

You can make the text and images on your screen easier to read by adjusting the screen resolution of your computer.

To adjust the screen resolution, do the following:

1. Right-click a blank area on the desktop.
2. Depending on your Windows version, do one of the following:
   - For Windows 7 or Windows 8.1: Click **Screen resolution**.
   - For Windows 10: Click **Display settings**. On the **Display** tab, click **Advanced display settings**.
3. Follow the instructions on the screen.

Note: Setting the resolution too low might prevent some items from fitting on the screen.

Customizable item size

You can make the items on your screen easier to read by changing the item size.

- To change the item size temporarily, use the Magnifier tool in Ease of Access Center. See "Ease of Access Center" on page 29.
- To change the item size permanently, do the following:
  - Change the size of all the items on your screen.

1. Right-click a blank area on the desktop.
2. Depending on your Windows version, do one of the following:
   - For Windows 7 or Windows 8.1: Click **Screen resolution → Make text and other items larger or smaller**.
   - For Windows 10: Click **Display settings**.
3. Change the item size by following the instructions on the screen.
4. Click **Apply**. This change will take effect the next time you log in to the operating system.

- Change the size of the items on a Web page.

  Press and hold Ctrl, and then press the plus-sign key (+) to enlarge or the minus-sign key (-) to reduce the text size.

- Change the size of the items on the desktop or a window.

  Note: This function might not work on some windows.

  If your mouse has a wheel, press and hold Ctrl, and then scroll the wheel to change the item size.

Industry-standard connectors

Your computer provides industry-standard connectors that enable you to connect assistive devices.

For more information about the location and function of each connector, see “Locations” on page 1.

TTY/TDD conversion modem

Your computer supports the use of a text telephone (TTY) or the telecommunications device for the deaf (TDD) conversion modem. The modem must be connected between your computer and a TTY/TDD telephone. Then, you can type a message on your computer and send it to the telephone.

Documentation in accessible formats

Lenovo provides electronic documentation in accessible formats, such as properly tagged PDF files or HyperText Markup Language (HTML) files. Lenovo electronic documentation is developed to ensure that visually impaired users can read the documentation through a screen reader. Each image in the documentation also includes adequate alternative text so that visually impaired users can understand the image when they use a screen reader.

Moving your computer to another country or region

When you move your computer to another country or region, you must take local electrical standards into consideration.

If you relocate your computer to a country or region that uses an electrical outlet style different from the type you are currently using, you will have to purchase either electrical plug adapters or new power cords. You can order power cords directly from Lenovo.

For power cord information and part numbers, go to:
http://www.lenovo.com/powercordnotice

Chapter 4. Security

This chapter provides information about how to protect your computer from theft and unauthorized use.

Security features

The following security features are available on your computer:

- Computrace Agent software embedded in firmware

  The Computrace Agent software is an IT asset management and computer theft recovery solution. The software detects if changes have been made on the computer, such as hardware, software, or the computer call-in location.

  Note: You might have to purchase a subscription to activate the Computrace Agent software.

- Cover presence switch (also called intrusion switch)

  The cover presence switch prevents your computer from logging in to the operating system when the computer cover is not properly installed or closed. To enable the cover presence switch connector on the system board, do the following:

  1. Start the Setup Utility program. See “Starting the Setup Utility program” on page 37.
  2. Set the administrator password. See “Setting, changing, and deleting a password” on page 38.
  3. From the **Security** submenu, select **Chassis Intrusion Detection → Enabled**. The cover presence switch connector on the system board is enabled.

  When you turn on the computer, if the cover presence switch detects that your computer cover is not correctly installed or closed, an error message will be displayed. To bypass the error message and log in to the operating system, do the following:

  1. Properly install or close your computer cover. See “Completing the parts replacement” on page 149.
  2. Press F1 to enter the Setup Utility program. Then press F10 to save and exit the Setup Utility program. The error message will not be displayed again.

- Ability to enable and disable devices and USB connectors

  For more information, see “Enabling or disabling a device” on page 39.

- Integrated fingerprint reader (available on some models)

  Fingerprint authentication can replace passwords and enable simple and secure user access. For more information, see “Using fingerprint authentication” on page 19.

- Trusted Platform Module (TPM)

  Trusted Platform Module is a secure cryptoprocessor that can store cryptographic keys that protect information stored in your computer.

Locking the computer cover

Locking the computer cover helps prevent unauthorized people from gaining access to the inside of your computer. Your computer comes with a padlock loop and might also come with a key lock that is built into the computer cover.

© Copyright Lenovo 2014, 2015

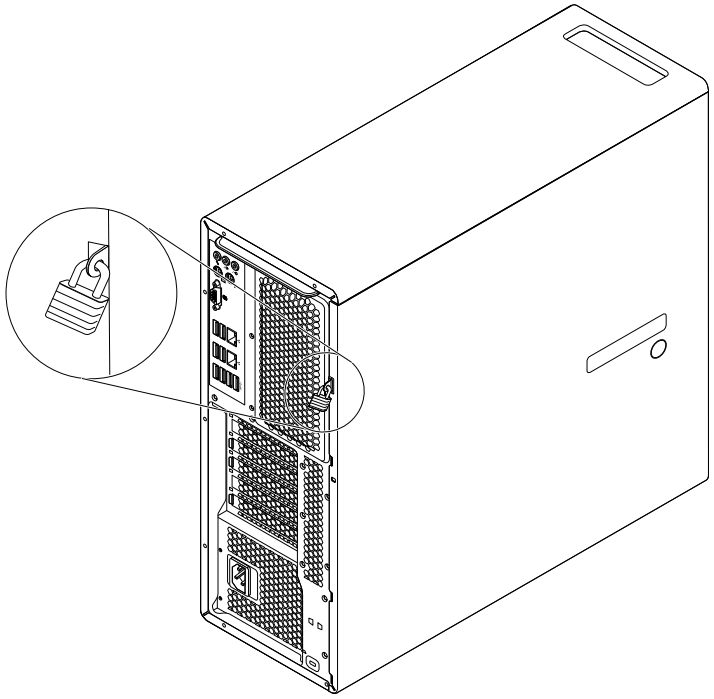

Figure 9. Installing a padlock

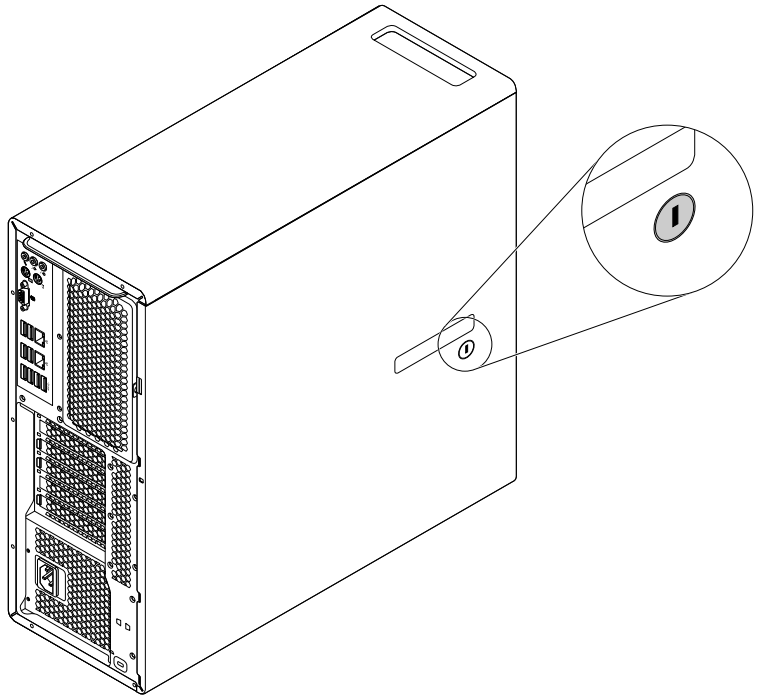

Figure 10. Locking the computer cover

Attaching a Kensington-style cable lock

You can use a Kensington-style cable lock to secure your computer to a desk, table, or other non-permanent fixture. The cable lock attaches to the security-lock slot at the rear of your computer. Depending on the type selected, the cable lock can be operated with a key or combination. The cable lock also locks the buttons used to open the computer cover. This is the same type of lock used with many notebook computers. You can order such a cable lock directly from Lenovo by searching for *Kensington* at:
http://www.lenovo.com/support

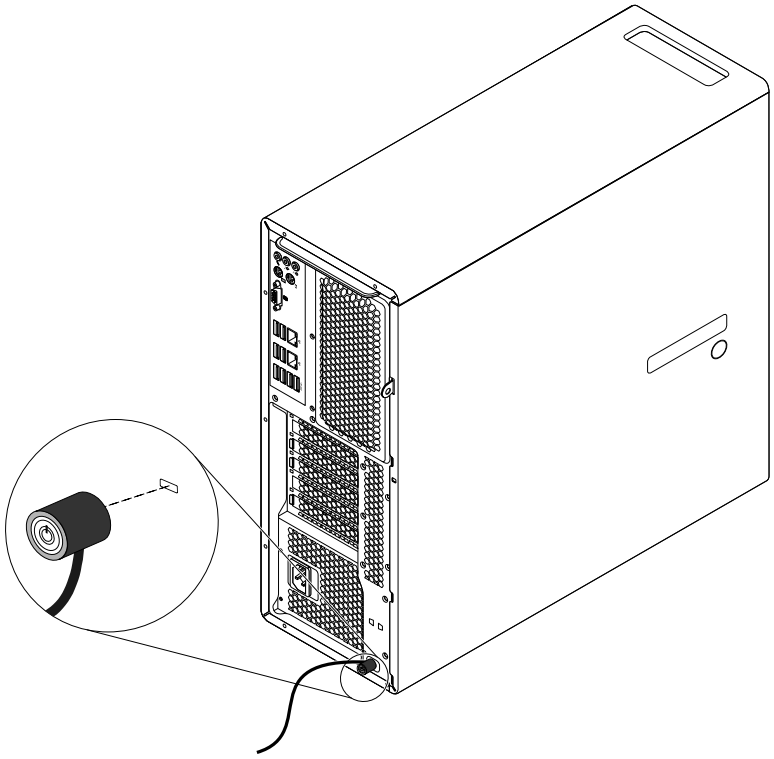

Figure 11. Kensington-style cable lock

Using passwords and Windows accounts

You can use BIOS passwords and Windows accounts to prevent unauthorized access to your computer and data.

- To use BIOS passwords, see “Using BIOS passwords” on page 38.
- To use Windows accounts, do the following:
  1. Depending on your Windows version, do one of the following:
     - For Windows 7: Click the Start button to open the Start menu, and then click **Control Panel** ➞ **User Accounts**.
     - For Windows 8.1: Move the pointer to the top-right or bottom-right corner of the screen to display the charms. Then, click **Settings** ➞ **Change PC settings** ➞ **Accounts**.
     - For Windows 10: Click the Start button to open the Start menu, and then click **Settings** ➞ **Accounts**.
  2. Follow the instructions on the screen.

Using fingerprint authentication

If your keyboard has a fingerprint reader, you can use fingerprint authentication to replace passwords for simple and secure user access. To use fingerprint authentication, first enroll your fingerprints and associate them with your passwords (such as the power-on password, hard disk password, and Windows password). Use the fingerprint reader and the fingerprint program to complete this procedure.

To use fingerprint authentication, do the following:

- For Windows 7, or Windows 8.1: Use the Fingerprint Manager Pro or ThinkVantage Fingerprint Software program provided by Lenovo. To open the program, see “Accessing a program on your computer” on page 15. For more information about using the program, refer to the help system of the program.
- For Windows 10: Use the fingerprint tool provided by Windows. Click the Start button to open the Start menu, and then click **Settings → Accounts → Sign-in options**. Follow the instructions on the screen.

To use the fingerprint reader, refer to the documentation shipped with the fingerprint keyboard or located on the Lenovo Support Web site at http://www.lenovo.com/support/keyboards.

Using and understanding firewalls

A firewall can be hardware, software, or a combination of both depending on the level of security required. Firewalls work on a set of rules to determine which inbound and outbound connections are authorized. If your computer is preinstalled with a firewall program, it helps protect against computer Internet security threats, unauthorized access, intrusions, and Internet attacks. It also protects your privacy. For more information about how to use the firewall program, refer to the help system of your firewall program.

The Windows operating system preinstalled on your computer provides the Windows Firewall. For details on using the Windows Firewall, refer to “Windows help system” on page 153.

Protecting data against viruses

Your computer is preinstalled with an antivirus program to help you guard against, detect, and eliminate viruses.

Lenovo provides a full version of antivirus software on your computer with a free 30-day subscription. After 30 days, you must renew the license to continue receiving the antivirus software updates.

Note: Virus definition files must be kept up-to-date to guard against new viruses.

For more information about how to use your antivirus software, refer to the help system of your antivirus software.

Chapter 5. Advanced configuration

This chapter provides the following information to help you configure the computer:

- “Using the Setup Utility program” on page 37
- “Updating or recovering the BIOS” on page 41

Using the Setup Utility program

The Setup Utility program is used to view and change the configuration settings of your computer, regardless of which operating system you are using. However, the operating system settings might override any similar settings in the Setup Utility program.

Starting the Setup Utility program

To start the Setup Utility program, do the following:

1. Turn on or restart your computer.
2. Before Windows starts up, repeatedly press and release the F1 key until the Setup Utility program opens.

   Note: If a power-on password or an administrator password has been set, the Setup Utility program menu will not be displayed until you enter the correct password. For more information, see “Using BIOS passwords” on page 38.

When the POST detects that the hard disk drive has been removed from your computer or the memory size has decreased, an error message will be displayed. You must do one of the following:

- Press F1 to enter the Setup Utility program.

  Note: After you enter the Setup Utility program, press F10 to save changes and exit the Setup Utility program. Press Enter when prompted to confirm the exit. The error message will not be displayed again.
- Press F2 to bypass the error message and log in to the operating system.

Note: You have to enable the configuration change detection feature for the POST to detect the removal of the hard disk drive. To enable the configuration change detection feature, do the following:

1. Start the Setup Utility program.
2. From the Setup Utility program main menu, select **Security → Configuration Change Detection**, and press Enter.
3. Select **Enabled** and press Enter.
4. Press F10 to save changes and exit the Setup Utility program. Press Enter when prompted to confirm the exit.

Viewing and changing settings

The Setup Utility program menu lists various items about the system configuration. To view or change settings, start the Setup Utility program. See “Starting the Setup Utility program” on page 37. Then, follow the instructions on the screen.

You can use either the keyboard or the mouse to navigate through menu choices. The keys used to perform various tasks are displayed at the bottom of each screen.

© Copyright Lenovo 2014, 2015

Using BIOS passwords

By using the Setup Utility program, you can set passwords to prevent unauthorized access to your computer and data.

You do not have to set any passwords to use your computer. However, using passwords improves computing security. If you decide to set any passwords, read the following sections.

Setup Utility program password types

The following types of passwords are available:

- Power-on password
  When a power-on password is set, you are prompted to enter a valid password each time the computer is turned on. The computer cannot be used until the valid password is entered.
- Administrator password
  Setting an administrator password deters unauthorized users from changing configuration settings. If you are responsible for maintaining the configuration settings of several computers, you might want to set an Administrator password.

  When an administrator password is set, you are prompted to enter a valid password each time you try to access the Setup Utility program. The Setup Utility program cannot be accessed until a valid password is entered.

  If both the power-on password and administrator password are set, you can enter either password. However, you must use your Administrator password to change any configuration settings.
- Hard disk password
  Setting a hard disk password prevents unauthorized access to the data on the hard disk drive. When a hard disk password is set, you are prompted to enter a valid password each time you try to access the hard disk drive.

  Notes:

  – After you set a hard disk password, your data on the hard disk drive is protected even if the hard disk drive is removed from one computer and installed in another.

  – If the hard disk password is forgotten, there is no way to reset the password or recover data from the hard disk drive.

Password considerations

A password can be any combination of up to 64 alphabetic and numeric characters. For security reasons, it is recommended to use a strong password that cannot be easily compromised.

Note: The Setup Utility program passwords are not case sensitive.

To set a strong password, consider the following guidelines:

- Have at least eight characters in length
- Contain at least one alphabetic character and one numeric character
- Not be your name or your user name
- Not be a common word or a common name
- Be significantly different from your previous passwords

Setting, changing, and deleting a password

To set, change, or delete a password, do the following:

1. Start the Setup Utility program. See “Starting the Setup Utility program” on page 37.
2. From the Setup Utility program main menu, select **Security**.

3. Depending on the password type, select **Set Power-On Password**, **Set Administrator Password**, or **Hard Disk Password**.
4. Follow the instructions on the right side of the screen to set, change, or delete a password.

   Note: A password can be any combination of up to 64 alphabetic and numeric characters. For more information, see “Password considerations” on page 38.

Erasing lost or forgotten passwords (clearing CMOS)

This section provides instructions on how to erase lost or forgotten passwords, such as a user password.

To erase a lost or forgotten password, do the following:

1. Remove all media from the drives and turn off all attached devices and the computer. Then, disconnect all power cords from electrical outlets and disconnect all cables that are connected to the computer.
2. Remove the computer cover. See “Removing the computer cover” on page 75.
3. Locate the Clear CMOS /Recovery jumper on the system board. See “Locating parts on the system board” on page 6.
4. Move the jumper from the standard position (pin 1 and pin 2) to the maintenance position (pin 2 and pin 3).
5. Reinstall the computer cover and connect the power cord. See “Completing the parts replacement” on page 149.
6. Turn on the computer and leave it on for approximately 10 seconds. Then, turn off the computer by holding the power button for approximately five seconds.
7. Repeat step 1 through step 2.
8. Move the Clear CMOS /Recovery jumper back to the standard position (pin 1 and pin 2).
9. Reinstall the computer cover and connect the power cord. See “Completing the parts replacement” on page 149.

Enabling or disabling a device

This section provides information on how to enable or disable user access to the following devices:

USB Setup	Use this option to enable or disable a USB connector. When a USB connector is disabled, the device connected to the USB connector cannot be used.
SATA Controller	When this option is set to **Disable**, all devices connected to the SATA connectors (such as hard disk drives or optical drives) are disabled and cannot be accessed.

To enable or disable a device, do the following:

1. Start the Setup Utility program. See “Starting the Setup Utility program” on page 37.
2. From the Setup Utility program main menu, select **Devices**.
3. Depending on the device you want to enable or disable, do one of the following:
   - Select **USB Setup** to enable or disable a USB device.
   - Select **ATA Drive Setup** to enable or disable an internal or external SATA device.
4. Select the desired settings and press Enter.
5. Press F10 to save changes and exit the Setup Utility program. See “Exiting the Setup Utility program” on page 41.

Selecting a startup device

If your computer does not start up from a device as expected, do one of the following to select the startup device you want.

Selecting a temporary startup device

Use this procedure to select a temporary startup device.

Note: Not all discs and hard disk drives are bootable.

1. Turn on or restart your computer.
2. When you see the logo screen, repeatedly press and release the F12 key. The Startup Device Menu window is displayed.
3. Select the desired startup device and press Enter. The computer will start up from the device you selected.

Note: Selecting a startup device from the Startup Device Menu window does not permanently change the startup sequence.

Selecting or changing the startup device sequence

To view or permanently change the configured startup device sequence, do the following:

1. Start the Setup Utility program. See “Starting the Setup Utility program” on page 37.
2. From the Setup Utility program main menu, select **Startup**.
3. Select the devices for the Primary Startup Sequence, the Automatic Startup Sequence, and the Error Startup Sequence. Read the information displayed on the right side of the screen.
4. Press F10 to save changes and exit the Setup Utility program. See “Exiting the Setup Utility program” on page 41.

Enabling ErP LPS compliance mode

Lenovo computers meet the eco-design requirements of the ErP Lot 3 regulation. For more information, go to:
http://www.lenovo.com/ecodeclaration

You can enable ErP LPS compliance mode in the Setup Utility program to reduce the consumption of electricity when your computer is off or in sleep mode.

To enable ErP LPS compliance mode in the Setup Utility program, do the following:

1. Start the Setup Utility program. See “Starting the Setup Utility program” on page 37.
2. From the Setup Utility program main menu, select **Power → Enhanced Power Saving Mode**, and press Enter.
3. Select **Enabled** and press Enter.
4. From the **Power** menu, select **Automatic Power On** and press Enter.
5. Select **Wake on Lan** and press Enter.
6. Select **Disabled** and press Enter.
7. Press F10 to save changes and exit the Setup Utility program. Press Enter when prompted to confirm the exit.

When ErP LPS compliance mode is enabled, you can wake up your computer by doing one of the following:

- Press the power button
- Enable the wake up on alarm feature

The wake up on alarm feature enables your computer to wake up at a set time. To enable the wake up on alarm feature, do the following:

1. Start the Setup Utility program.
2. From the Setup Utility program main menu, select **Power → Automatic Power On**, and press Enter.
3. Select **Wake Up on Alarm** and press Enter. Then follow the instructions on the screen.
4. Press F10 to save changes and exit the Setup Utility program. Press Enter when prompted to confirm the exit.

- Enable the after power loss feature

  The after power loss feature enables your computer to wake up when the power supply resumes after a sudden loss of electricity. To enable the after power loss feature, do the following:

  1. Start the Setup Utility program.
  2. From the Setup Utility program main menu, select **Power → After Power Loss**, and press Enter.
  3. Select **Power On** and press Enter.
  4. Press F10 to save changes and exit the Setup Utility program. Press Enter when prompted to confirm the exit.

Exiting the Setup Utility program

After you finish viewing or changing settings, press Esc to return to the Setup Utility program main menu. You might have to press Esc several times. Do one of the following:

- If you want to save the new settings, press F10 to save changes and exit the Setup Utility program.
- If you do not want to save the settings, select **Exit → Discard Changes and Exit**, and then press Enter. When the Reset Without Saving window displays, select **Yes**, and then press Enter to exit the Setup Utility program.
- If you want to return to the default settings, press F9 to load the default settings, and then press F10 to save and exit the Setup Utility program.

Updating or recovering the BIOS

Lenovo might make changes and enhancements to the BIOS. When updates are released, they are available as downloadable files on the Lenovo Web site at http://www.lenovo.com/drivers. Instructions for using the BIOS updates are available in a TXT file that is included with the update files. For most models, you can download either an update program to create a system-program-update disc or an update program that can be run from the operating system.

This chapter provides information about updating the BIOS, and how to recover from a BIOS update failure.

BIOS levels

An incorrect level of BIOS can cause false errors and unnecessary FRU replacement. Use the following information to determine the current level of BIOS installed in the computer, the latest BIOS available for the computer, and where to obtain the latest level of BIOS.

- To determine the current Level of BIOS:
  Start the Setup Utility and view the BIOS Revision level on the Main page.
- Sources for obtaining the latest level BIOS available
  - Lenovo support web site: `http://www.lenovo.com/support/`
  - Lenovo Customer Support Center
  - Levels 1 and 2 Support

To update the BIOS, see “Updating or recovering the BIOS” on page 41.

Note: BIOS settings vary by operating system. Change the BIOS settings before installing a new operating system. See “Changing the BIOS settings before installing a new operating system” on page 42.

Using system programs

System programs are the basic layer of software built into your computer. System programs include the POST, the BIOS, and the Setup Utility program. The POST is a set of tests and procedures that are performed each time you turn on your computer. The BIOS is a layer of software that translates instructions from other layers of software into electrical signals that the computer hardware can execute. You can use the Setup Utility program to view or change the configuration settings of your computer. See “Using the Setup Utility program” on page 37 for detailed information.

The system board of your computer has a module called electrically erasable programmable read-only memory (EEPROM, also referred to as flash memory). It enables you to update the POST, the BIOS, and the Setup Utility program easily. To perform such an update, you can either start your computer with a system-program-update disc or run a special update program from your operating system.

Lenovo might make changes and enhancements to the POST and BIOS. When updates are released, they are available as downloadable files on the Lenovo Web site at http://www.lenovo.com. Instructions for using the POST and BIOS updates are available in a TXT file that is included with the update files. For most models, you can download an update program that can be used to create a system-program-update disc or be run from the operating system.

Changing the BIOS settings before installing a new operating system

BIOS settings vary by operating system. Change the BIOS settings before installing a new operating system.

To change the BIOS settings, do the following:

1. Start the Setup Utility program. See “Starting the Setup Utility program” on page 37.
2. From the Setup Utility program main menu, select **Exit → OS Optimized Default**.
3. Depending on the operating system to be installed, do one of the following:
   - To install the Windows 8.1 (64-bit) operating system, select **Enabled**.
   - To install an operating system other than Windows 8.1 (64-bit), select **Disabled**.
4. Select **Yes** in the window displayed and press Enter to confirm your selection.
5. Press F10 to save changes and exit the Setup Utility program. See “Exiting the Setup Utility program” on page 41.

Updating the BIOS

When you install a new program, hardware device, or device driver, you might be informed to update the BIOS. You can update the BIOS from your operating system or a flash update disc (supported only on some models).

To update the BIOS, do the following:

1. Go to http://www.lenovo.com/drivers.
2. To update the BIOS from your operating system, download the flash BIOS update driver according to your operating system version. To update the BIOS from a flash update disc, download the ISO image version (used to create a flash update disc). Then, download the installation instructions for the flash BIOS update driver.
3. Print the installation instructions you download and follow the instructions to update the BIOS.

Note: If you want to update the BIOS from a flash update disc, the installation instructions might not provide the information about how to record the update disc. See “Recording a disc” on page 22.

Recovering from a BIOS update failure

To recover from a BIOS update failure, do the following:

1. Remove all media from the drives and turn off all attached devices and the computer. Then, disconnect all power cords from electrical outlets and disconnect all cables that are connected to the computer.
2. Remove the computer cover. See “Removing the computer cover” on page 75.
3. Locate the Clear CMOS /Recovery jumper on the system board. See “Locating parts on the system board” on page 6.
4. Remove any cables that impede access to the Clear CMOS /Recovery jumper.
5. Move the jumper from the standard position (pin 1 and pin 2) to the maintenance position (pin 2 and pin 3).
6. Reconnect any cables that were disconnected and reinstall the PCI card if removed.
7. Reinstall the computer cover and reconnect the power cords for the computer and monitor to electrical outlets. See “Completing the parts replacement” on page 149.
8. Press the power button to turn on the computer and insert the BIOS update disc into the optical drive. Wait a few minutes. The recovery process begins. After the recovery process is completed, your computer will be turned off automatically.

   Note: Depending on the computer model, the recovery process will take two to three minutes.
9. Repeat step 1 through step 4.
10. Move the Clear CMOS /Recovery jumper back to the standard position (pin 1 and pin 2).
11. Reconnect any cables that were disconnected and reinstall the PCI card if removed.
12. Reinstall the computer cover and reconnect any cables that were disconnected.
13. Press the power button to turn on the computer and restart the operating system.

Configuring RAID

This chapter provides instructions on how to install hard disk drives and configure RAID for your computer. Depending on your computer model, RAID can be enabled by Intel Rapid Storage Technology enterprise (RSTe) or the LSI MegaRAID BIOS.

Note: The RAID configuration information described in this chapter is only applicable in the Windows environment. For information about configuring RAID in the Linux environment, contact your Linux software provider.

This chapter provides information about the following topics:

- “Configuring RAID with Intel RSTe” on page 43
- “Quick RAID setup using the LSI MegaRAID BIOS configuration utility ” on page 46

Configuring RAID with Intel RSTe

If your computer comes with Intel RSTe, you can follow the sections below to configure RAID with Intel RSTe.

This section provides information about the following topics:

- “Installing SATA or SAS hard disk drives” on page 44
- “Configuring SATA or SAS RAID functionality with the Intel RSTe configuration utility” on page 44

Installing SATA or SAS hard disk drives

Ensure that your computer has the minimum number of SATA or SAS hard disk drives installed for the following supported levels of RAID:

- RAID Level 0 - Striped disk array
  - A RAID Level 0 hard disk drive group consisting of at least two hard disk drives
  - Supported strip size: 4 KB, 8 KB, 16 KB, 32 KB, 64 KB, or 128 KB
  - Better performance without fault tolerance
- RAID Level 1 - Mirrored disk array
  - A RAID Level 1 hard disk drive group consisting of two hard disk drives
  - Improved reading performance and 100% redundancy
- RAID Level 10 - Striped and mirrored disk array (a combination of RAID Level 0 and RAID Level 1)
  - A RAID Level 10 hard disk drive group consisting of four hard disk drives
  - Supported strip size: 4 KB, 8 KB, 16 KB, 32 KB, or 64 KB
- RAID Level 5 - Block-level striped disk array with distributed parity
  - A RAID Level 5 hard disk drive group consisting of at least three hard disk drives
  - Supported strip size: 4 KB, 8 KB, 16 KB, 32 KB, or 64 KB
  - Better performance and fault tolerance

Ensure that one of the following hard disk drive enablement modules is installed in your computer:

- If zero to four SATA hard disk drives or solid state drives are installed, no hard disk drive enablement module is needed.
- If five SATA hard disk drives or solid state drives are installed, the SATA hard disk drive enablement module (one to five hard disk drives) is required.
- If any SAS hard disk drives are installed, the SAS hard disk drive enablement module (one to five hard disk drives) is required.

Configuring SATA or SAS RAID functionality with the Intel RSTe configuration utility

This section describes the information about configuring SATA or SAS RAID functionality with the Intel RSTe configuration utility.

Note: The Intel RSTe configuration utility assumes that your computer is installed with more than one hard disk drive. Therefore, if only one hard disk drive is installed in your computer, the following information does not apply.

This section provides information about the following topics:

- “Entering the Intel RSTe configuration utility” on page 44
- “Creating RAID volumes using the Intel RSTe configuration utility” on page 45
- “Deleting RAID volumes using the Intel RSTe configuration utility” on page 45
- “Resetting hard disk drives to non-RAID” on page 45

Entering the Intel RSTe configuration utility

This section provides instructions on how to enter the Intel RSTe configuration utility.

During the computer startup, follow the instructions on the screen. Press Ctrl+I to enter the Intel RSTe configuration utility.

The following four options are displayed after you enter the Intel RSTe configuration utility:

1. **Create RAID Volume**
2. **Delete RAID Volume**
3. **Reset Disks to Non - RAID**
4. **Exit**

Press the up and down arrow keys to select an option. Press Enter to enter the menu for the selected option. Press Esc to exit the Intel RSTe configuration utility, or select **Exit**, and then press Enter to exit the Intel RSTe configuration utility.

Creating RAID volumes using the Intel RSTe configuration utility

This section provides instructions on how to use the Intel RSTe configuration utility to create RAID volumes.

To create a RAID volume, do the following:

1. Enter the Intel RSTe configuration utility. See “Entering the Intel RSTe configuration utility” on page 44.
2. Press the up and down arrow keys to select **Create RAID Volume**, and then press Enter to view the CREATE VOLUME MENU window.
3. The following five options are displayed. Press the up and down arrow keys to select an option. After you configure an option, press Tab or Enter to go to the next option.
   a. **Name**: Volume name. You can use the default name or type a preferred name.
   b. **RAID Level**: You can change the RAID Level to one of the following:
      - **RAID Level 0**
      - **RAID Level 1**
      - **RAID Level 10**
      - **RAID Level 5**
   c. **Disks**: Press Enter to enter the SELECT DISKS MENU window. Follow the instructions at the bottom of the menu to select hard disk drives, and then press Enter to complete the configuration.
   d. **Strip Size**: Press the up and down arrow keys to select a strip size.
   e. **Capacity**: Customize the capacity of the RAID volume. The default RAID volume is the largest value.
4. Press Enter to finish configuring all the five options. When prompted, press Y to confirm the creation of the new RAID volume.
5. After the new RAID volume is created, the information about the RAID volume will be displayed under **DISK/VOLUME INFORMATION**, such as ID number, name, RAID level, strip size, volume size, status, and whether it is a bootable volume.

Deleting RAID volumes using the Intel RSTe configuration utility

This section provides instructions on how to use the Intel RSTe configuration utility to delete RAID volumes.

To delete a RAID volume, do the following:

1. Enter the Intel RSTe configuration utility. See “Entering the Intel RSTe configuration utility” on page 44.
2. Press the up and down arrow keys to select **Delete RAID Volume**. Press Enter to enter the DELETE VOLUME MENU window.
3. Press the up and down arrow keys to select the RAID volume that is not needed. Press Del to delete it from the **RAID Volumes** list.
4. When prompted, press Y to confirm the deletion of the selected RAID volume.

Resetting hard disk drives to non-RAID

This section provides instructions on how to reset hard disk drives to non-RAID.

To reset hard disk drives to non-RAID, do the following:

1. Enter the Intel RSTe configuration utility. See “Entering the Intel RSTe configuration utility” on page 44.
2. Press the up and down arrow keys to select **Reset Disks to Non-RAID**. Press Enter to enter the RESET RAID DATA window.
3. Use the up and down arrow keys and the space key to mark individual hard disk drive to be reset, and then press Enter to complete the selection.
4. When prompted, press Y to confirm the reset action.
5. If the hard disk drive you reset is part of a RAID volume, the computer might detect that the RAID volume is degraded. In this case, you are prompted to select a hard disk drive to initiate a rebuild process.
6. Select an available hard disk drive, and then press Enter to initiate the rebuild process.

   Note: Press Esc to cancel a rebuild process and keep the RAID volume in the degraded status. In the Main Menu window under **DISK/VOLUME INFORMATION**, you will see the status of the RAID volume is changed to **Degraded**.

Quick RAID setup using the LSI MegaRAID BIOS configuration utility

Notes:

- The LSI MegaRAID SAS adapter and the LSI MegaRAID BIOS configuration utility are only available on some models.
- The following steps in this section are intended to guide you through a quick setup of basic RAID functions with the LSI MegaRAID SAS adapter. For advanced setup and configuration using this adapter, refer to the complete *MegaRAID SAS Software User Guide* that is available at http://support.lenovo.com/en_US/guides-and-manuals/detail.page?DocID=UM007543.

This section provides information about the following topics:

- “Installing SATA or SAS hard disk drives” on page 46
- “Entering the LSI MegaRAID BIOS configuration utility” on page 47
- “Creating RAID volumes using the LSI MegaRAID BIOS configuration utility” on page 47
- “Deleting RAID volumes using the LSI MegaRAID BIOS configuration utility” on page 48
- “Setting the hot spare hard disk drive” on page 48

Installing SATA or SAS hard disk drives

Ensure that your computer has the minimum number of SATA or SAS hard disk drives installed for the following supported levels of RAID:

- RAID Level 0 - Striped disk array
  - A RAID Level 0 hard disk drive group consisting of at least one hard disk drive
  - Supported strip size: 8 KB to 1 MB
  - Better performance without fault tolerance
- RAID Level 00 - Spanned hard disk drive group with a series of RAID 0 hard disk drive groups
  - A RAID Level 00 hard disk drive group consisting of two or four hard disk drives
  - Supported strip size: 8 KB to 1 MB
  - Better performance without fault tolerance
- RAID Level 1 - Mirrored disk array
  - A RAID Level 1 hard disk drive group consisting of two or four hard disk drives
  - Improved read performance and 100% redundancy

- RAID Level 10 - A combination of RAID Level 0 and RAID Level 1
  - A RAID Level 10 hard disk drive group consisting of four hard disk drives
  - Data being striped across hard disk drive groups
  - Provides both high data transfer rates and complete data redundancy
- RAID Level 5 - Block-level striped disk array with distributed parity
  - A RAID Level 5 hard disk drive group consisting of at least three hard disk drives
  - Supported strip size: 8 KB to 1 MB
  - Better performance and fault tolerance
  - RAID Level 5 might not be available on all models of LSI MegaRAID adapter
- RAID Level 6 - Block-level striped disk array with dual distributed parity
  - A RAID Level 6 hard disk drive group consisting of at least four hard disk drives
  - Supported strip size: 8 KB to 1 MB
  - Better performance and fault tolerance that can stand up to loss of two hard disk drives
  - RAID Level 6 might not be available on all models of LSI MegaRAID adapter

Ensure that the LSI MegaRAID SAS adapter card is installed in your computer, and that the hard disk drives are connected to this adapter card and not to the connectors on the system board.

Entering the LSI MegaRAID BIOS configuration utility

This section provides instructions on how to enter the LSI MegeRAID BIOS configuration utility.

To enter the LSI MegaRAID BIOS configuration utility, do the following:

1. During the computer startup, follow the instructions on the screen.
2. Press Ctrl+H to enter the CONTROLLER SELECTION window.
3. Select the controller you want to configure, and then click **Start** to enter the LSI MegaRAID BIOS configuration utility.

Creating RAID volumes using the LSI MegaRAID BIOS configuration utility

This section provides instructions on how to create RAID volumes using the LSI MegaRAID BIOS configuration utility.

To create RAID volumes using the LSI MegaRAID BIOS configuration utility, do the following:

1. Click **Configuration Wizard** on the WebBIOS main screen to enter the Choosing the Configuration Type window.
2. Press the up and down arrow keys to select one of the three configuration types:
   - **Clear Configuration**: Clear the existing configuration.
   - **New Configuration**: Clear the existing configuration and create new configuration.
   - **Add Configuration**: Retain the existing storage configuration and add new hard disk drives. The new configuration will not cause any data loss.
3. Select **Add Configuration**, and then click **Next**. The following two options are displayed in the Configuration Method window.
   - **Manual Configuration**: Manually create hard disk drive groups and virtual hard disk drives, and set parameters.
   - **Automatic Configuration**: Automatically create an optimal RAID configuration.

4. Select **Manual Configuration**, and then click **Next**. The Drive Group Definition window is displayed. To create hard disk drive groups, do the following:
   a. Select one or more hard disk drives for the group (keep pressing Ctrl while selecting more than one hard disk drive).
   b. Click **Add To Array** to move the selected hard disk drives to **Drive Groups**.
   c. Click **Accept DG** to create the hard disk drive group.
   d. Repeat the above steps if you want to create more than one hard disk drive group.
5. Click **Next**. The Span Definition window is displayed. Select the hard disk drive group that you want to add to a span, and then click **Add to SPAN**. Repeat this step until you have selected all the hard disk drive groups you want.
6. Click **Next**. The Virtual Drive Definition window is displayed. Change the virtual hard disk drive options from the default settings listed on the screen to the settings you want. Click **Accept** , and then follow the instructions on the screen to customize your settings.
7. Click **Next**, and the Preview window is displayed.
8. Verify your settings, and then click **Accept**.
9. Click **Yes** to save the configuration.

Deleting RAID volumes using the LSI MegaRAID BIOS configuration utility

This section provides instructions on how to delete RAID volumes using the LSI MegaRAID BIOS configuration utility.

To delete RAID volumes using the LSI MegaRAID BIOS configuration utility, do the following:

1. Enter the LSI MegaRAID BIOS configuration utility. See “Entering the LSI MegaRAID BIOS configuration utility” on page 47.
2. Click the virtual hard disk drives you want to delete, and then the Virtual Drive window is displayed.
3. Click **Delete**, and then click **Go**.
4. Click **Yes** to save your changes.

Setting the hot spare hard disk drive

This section provides instructions on how to set the hot spare hard disk drive.

To set the hot space hard disk drive, do the following:

1. Enter the LSI MegaRAID BIOS configuration utility. See “Entering the LSI MegaRAID BIOS configuration utility” on page 47.
2. Click the hard disk drive you want to set as the hot spare hard disk drive. The Drive window is displayed.
3. Select **Make Global HSP** or **Make Dedicated HSP**, and then click **Go**.
4. The main screen of the LSI MegaRAID BIOS configuration utility is displayed, and the hard disk drive you selected is listed as a hot spare hard disk drive in the right pane.

Chapter 6. Preventing problems

This chapter provides information that can help you avoid common problems and keep your computer running smoothly.

Keeping your computer current

In some situations you might find it necessary to have the most current software programs, device drivers, or operating system. This section explains how to get the latest updates for your computer.

Getting the latest system updates

To get the latest system updates for your computer, ensure that your computer is connected to the Internet and do one of the following:

- Use the corresponding Lenovo program to get the system updates, such as device driver updates, software updates, and BIOS updates:
  - For Windows 7 or Windows 8.1: Use the System Update program.
  - For Windows 10: Use the Lenovo Companion program.

  To open the System Update or Lenovo Companion program, see “Accessing a program on your computer” on page 15. For more information about using the program, refer to the help system of the program.
- Use Windows Update to get the system updates, such as security fixes, new versions of Windows components, and device driver updates.
  1. Depending on your Windows version, do one of the following:
     - For Windows 7: Click the Start button to open the Start menu, and then click **Control Panel**. View Control Panel using Large icons or Small icons, and then click **Windows Update**.
     - For Windows 8.1: Move the pointer to the top-right or bottom-right corner of the screen to display the charms. Then, click **Settings → Change PC settings → Update and recovery → Windows Update**.
     - For Windows 10: Click the Start button to open the Start menu. Then, click **Settings → Update & security → Windows Update**.
  2. Follow the instructions on the screen.

Note: The device drivers provided by Windows Update might not be tested by Lenovo. It is recommended that you get device drivers by using Lenovo programs or from the Lenovo Web site at http://www.lenovo.com/drivers.

Cleaning and maintenance

With appropriate care and maintenance your computer will serve you reliably. The following topics offer information to help you keep your computer in top working order.

Basics

Here are some basic points about keeping your computer functioning properly:

- Keep your computer in a clean, dry environment. Ensure that the computer rests on a flat, steady surface.
- Do not cover any of the vents in the computer or monitor. These vents provide airflow to keep your computer from overheating.

© Copyright Lenovo 2014, 2015

- Keep food and drinks away from all parts of your computer. Food particles and spills might make the keyboard and mouse stick and unusable.
- Do not get the power switches or other controls wet. Moisture can damage these parts and cause an electrical hazard.
- Always disconnect a power cord by grasping the plug instead of the cord.

Cleaning your computer

It is a good practice to clean your computer periodically to protect the surfaces and ensure trouble-free operation.

CAUTION:
Be sure to turn off the computer and monitor before cleaning the computer and monitor screen.

Computer

Use only mild cleaning solutions and a damp cloth to clean the painted surfaces of the computer.

Keyboard

To clean your computer keyboard, do the following:

1. Apply some isopropyl rubbing alcohol to a soft, dust-free cloth.
2. Wipe each keytop surface with the cloth. Wipe the keys one by one; if you wipe several keys at a time, the cloth may hook onto an adjacent key and possibly damage it. Ensure that no liquid drips onto or between the keys.
3. To remove any crumbs or dust from beneath the keys, you can use a camera blower with a brush or cool air from a hair dryer.

Note: Avoid spraying cleaner directly onto the keyboard.

Optical mouse

An optical mouse uses a light-emitting diode (LED) and an optical sensor to navigate the pointer. If the pointer on the screen does not move smoothly with the optical mouse, you might need to clean the mouse.

To clean an optical mouse, do the following:

1. Turn off your computer.
2. Disconnect the mouse cable from the computer.
3. Turn the mouse upside down to check the lens.
   - If there is a smudge on the lens, gently clean the area with a plain cotton-tipped swab.
   - If there is debris in the lens, gently blow the debris away from the area.
4. Check the surface on which you are using the mouse. If you have a very intricate picture or pattern beneath the mouse, it might be difficult for the digital signal processor to determine changes in the mouse position.
5. Reconnect the mouse cable to the computer.
6. Turn your computer back on.

Display screen

Dust buildup compounds problems associated with glare. Remember to clean your monitor screen periodically.

Cleaning a flat-panel monitor surface

To clean the flexible film surface of a flat-panel computer display, wipe it gently with a soft, dry cloth, or blow on the screen to remove grit and other loose particles. Then moisten a cloth with LCD cleaner and wipe the screen surface.

Many computer supply stores carry the special cleaning fluids for displays. Use cleaning fluids developed for LCD displays only. First apply the fluid to a lint-free, soft cloth, then clean the LCD display. Some computer supply stores carry pre-moistened towelettes for LCD maintenance.

Cleaning a glass-screen surface

To clean a glass-screen surface, wipe it gently with a soft, dry cloth, or blow on the screen to remove grit and other loose particles. Then use a soft cloth moistened with a nonabrasive liquid glass cleaner.

Good maintenance practices

By performing a few good maintenance practices, you can maintain good computer performance, protect your data, and be prepared in case of a computer failure.

- Empty your recycle bin on a regular basis.
- Use the disk defragmentation or disk optimization feature of your operating system occasionally to prevent performance problems caused by an excessive number of fragmented files.
- Clean out your Inbox, Sent Items, and Deleted Items folders in your e-mail application on a regular basis.
- Back up critical data regularly on removable media memory, such as discs and USB storage devices, and store the removable media in a safe location. The frequency of making backup copies depends on how critical the data is to you or your business.
- Back up your entire hard disk drive on a regular basis, see Recovery information.
- Keep your computer software, device drivers, and operating system up-to-date. See “Keeping your computer current ” on page 49.
- Keep a log book. Entries might include major software or hardware changes, device-driver updates, intermittent problems and what you did to resolve them, and other issues you might have experienced. The cause of a problem might be change in hardware, change in software, or any other actions that might have taken place. A log book can help you or a Lenovo technician determines the cause of a problem.
- Create Product Recovery discs. See “Creating and using recovery media” on page 67 for more information about using Product Recovery discs to restore the hard disk drive to the factory-default settings.
- Create rescue media using discs or USB storage devices as early as possible. You can use a rescue medium to recover from failures that prevent you from gaining access to the Windows environment or the Rescue and Recovery workspace on your hard disk drive.

Moving your computer

Take the following precautions before moving your computer:

1. Back up all files and data from the hard disk drive. There are a variety of backup programs available commercially. If you use the Windows 7 operating system, Lenovo provides the Rescue and Recovery program to help you back up and restore data. See “Performing backup and recovery operations” on page 68.
2. Remove all media from your computer, such as discs, USB storage devices, memory cards, and so on.
3. Turn off the computer and all attached devices. Your hard disk drive automatically parks the read/write head in a nondata area. This prevents damage to the hard disk drive.
4. Unplug the power cords from electrical outlets.
5. Disconnect communication cables, such as modem or network cables, from the outlets first, and then disconnect the other ends from the computer.

6. Note where any remaining cables are attached to the computer; then, remove them.
7. If you saved the original shipping cartons and packing materials, use them to pack the units. If you are using different cartons, cushion the units to avoid damage.

Chapter 7. Troubleshooting and diagnostics

This chapter provides information about diagnosing and troubleshooting computer problems. If your computer problem is not described here, see Chapter 10 “Getting information, help, and service” on page 153 for additional troubleshooting resources.

Basic troubleshooting

The following table provides some basic instructions to help you troubleshoot your computer problems.

Note: If you cannot correct the problem, have the computer serviced. For a list of service and support telephone numbers, refer to the *Safety, Warranty, and Setup Guide* that comes with your computer or go to the Lenovo Support Web site at:
http://www.lenovo.com/support/phone

Symptom	Action
The computer does not start when you press the power button.	Ensure that: • The power cord is correctly connected to the rear of the computer and to a working electrical outlet. • If your computer has a secondary power switch on the rear of the computer, ensure that it is switched on. • The power indicator on the front of the computer is on. • The computer voltage matches the voltage available at the electrical outlet for your country or region.
The monitor screen is blank.	Ensure that: • The monitor signal cable is correctly connected to the monitor and to the appropriate monitor connector on the computer. • The monitor power cord is correctly connected to the monitor and to a working electrical outlet. • The monitor is turned on and the brightness and contrast is set correctly. • The computer voltage matches the voltage available at the electrical outlet for your country or region. • If your computer has a discrete graphics card installed, be sure to use a monitor connector on the discrete graphics card.
The keyboard does not work.	Ensure that: • The computer is turned on. • The keyboard is securely connected to a PS/2 keyboard connector or a USB connector on the computer. • No keys are stuck.
The mouse does not work.	Ensure that: • The computer is turned on. • The mouse is securely connected to a PS/2 mouse connector or a USB connector on the computer. • The mouse is clean. Refer to “Optical mouse” on page 50 for further information.

© Copyright Lenovo 2014, 2015

Symptom	Action
The operating system does not start.	Ensure that the startup sequence includes the device where the operating system resides. Usually, the operating system is on the hard disk drive. For more information, see “Selecting a startup device” on page 40.
The computer beeps multiple times before the operating system starts.	Ensure that no keys are stuck.

Troubleshooting procedure

Use the following procedure as a starting point for diagnosing problems you are experiencing with your computer:

1. Ensure that the cables for all attached devices are connected correctly and securely.
2. Ensure that all attached devices that require ac power are connected to properly grounded, functioning electrical outlets.
3. Ensure that all attached devices are enabled in the BIOS settings of your computer. For more information about accessing and changing the BIOS settings, refer to “Using the Setup Utility program” on page 37.
4. Go to “Troubleshooting” on page 54 and follow the instructions for the type of problem you are experiencing. If the Troubleshooting information does not help you resolve a problem, continue with the next step.
5. Try using a previously captured configuration to see if a recent change to hardware or software settings has caused a problem. Before restoring a previous configuration, capture your current configuration in case the older configuration settings do not solve the problem or have adverse effects. To restore a captured configuration, do the following:
   a. Open Control Panel by doing one of the following:
      - For Windows 7: Click the Start button to open the Start menu, and then click **Control Panel**.
      - For Windows 8.1: See “Accessing Control Panel on the Windows 8.1 operating system” on page 24.
      - For Windows 10: Right-click the Start button to open the Start context menu, and then click **Control Panel**.
   b. View Control Panel using Large icons or Small icons, and then click **Recovery → Open System Restore**.
   c. Follow the instructions on the screen.

   If this does not correct the problem, continue with the next step.
6. Run the diagnostic program. See “Lenovo Solution Center” on page 64 for more information.
   - If the diagnostic program detects a hardware failure or if you are unable to run the diagnostic program, contact the Lenovo Customer Support Center. See Chapter 10 “Getting information, help, and service” on page 153 for more information.
   - If the diagnostic program does not detect a hardware failure, continue with the next step.
7. Use an antivirus program to see if your computer has been infected by a virus. If the program detects a virus, remove the virus.
8. If none of these actions solve the problem, seek technical assistance. See Chapter 10 “Getting information, help, and service” on page 153 for more information.

Troubleshooting

Use the troubleshooting information to find solutions to problems that have definite symptoms.

If the symptom occurred immediately after you installed new software or a new hardware option, do the following before referring to the troubleshooting information:

1. Remove the new hardware option or software. If you must remove the computer cover to remove a hardware option, ensure that you review and follow the electrical safety information provided with your computer. For your safety, do not operate the computer with the cover removed.
2. Run the diagnostic program to ensure your computer is operating correctly.
3. Reinstall the new hardware option or software following the instructions provided by the manufacturer.

Audio problems

This section provides solutions to audio-related problems.

No audio in Windows

Solutions:

- If you are using powered external speakers that have an On/Off control, ensure the following:
  - The On/Off control is set to the **On** position.
  - The speaker power cable is connected to a properly grounded, functional ac electrical outlet.
- If your external speakers have a volume control, ensure that the volume is not set too low.
- On the Windows desktop, click the speaker icon in the Windows notification area. Then click **Mixer**. Ensure that the mute speakers settings are not selected and none of the volume settings is set too low.
- Some models have a front audio panel you can use to adjust volume. If you have a front audio panel, ensure that the volume is not set too low.
- Ensure that your external speakers (and headphones, if used) are connected to the correct audio connector on the computer. Most speaker cables are color-coded to match the connector.

  Note: When external-speaker or headphone cables are attached to the audio connector, the internal speaker, if present, is disabled. In most cases, if an audio adapter is installed in one of the expansion slots, the audio function built into the system board is disabled. Therefore, you must use the audio connectors on the audio adapter.
- Ensure that the program you are running is designed for use in the Microsoft Windows operating system. If the program is designed to run in DOS, the program does not use the Windows sound feature. The program must be configured to use SoundBlaster Pro or SoundBlaster emulation.
- Ensure that the audio device drivers are correctly installed. See Microsoft Windows help system for more information.

Sound comes from one external speaker only

Solutions:

- Ensure that the speaker cable is inserted completely into the connector on the computer.
- Ensure that the cable that attaches the left speaker to the right speaker is securely connected.
- Click the speaker icon in the Windows notification area. Then click the speaker icon on top of the volume control. Click the **Levels** tab and ensure that the Balance settings are set correctly .

CD problems

This section provides solutions to CD-related problems.

A CD or DVD does not work

Solutions:

- Ensure that the disc is inserted correctly, with its label up.

- Ensure that the disc you are using is clean. To remove dust or fingerprints, wipe the disc clean with a soft cloth from the center to the outside. Wiping a disc in a circular motion might cause loss of data.
- Ensure that the disc you are using is not scratched or damaged. Try inserting another disc that you know is good. If you cannot read from a known-good disc, you might have a problem with your optical drive or the cabling to your optical drive. Ensure that the power cable and signal cable are securely connected to the drive.

Unable to use a bootable recovery medium, such as the Product Recovery CD, to start your computer

Solution: Ensure that the CD or DVD drive is in the startup sequence before the hard disk drive. Refer to “Selecting or changing the startup device sequence” on page 40 for information on viewing and changing the startup sequence. Note that on some models the startup sequence is permanently set and cannot be changed.

DVD problems

This section provides solutions to DVD-related problems.

Black screen instead of DVD video

Solutions:

- Restart the DVD player program.
- Try a lower screen resolution or color depth.
- Close any open files, and then restart the computer.

DVD movie does not play

Solutions:

- Ensure that the disc surface is clean and not scratched.
- Check the disc or package for regional coding. You might need to purchase a disc with coding for the region where you are using your computer.

No audio or intermittent audio while playing a DVD movie

Solutions:

- Check the volume control settings on your computer and on your speakers.
- Ensure that the disc surface is clean and not scratched.
- Check all cable connections to and from the speakers.
- Use the DVD menu for the video to select a different audio track.

Playback is slow or choppy

Solutions:

- Disable any background programs, such as AntiVirus or Desktop Themes.
- Ensure that video resolution is set to less than 1152 x 864 pixels.

Invalid disc or no disc found message

Solutions:

- Ensure that a DVD disc is in the drive with the shiny side of the disc facing down.
- Ensure that video resolution is set to less than 1152 x 864 pixels.

- On computers that have a CD-ROM or CD-RW drive in addition to a DVD-ROM drive, ensure that the DVD disc is in the drive labeled “DVD”.

Intermittent problems

Some problems occur only occasionally and are difficult to repeat.

Solutions:

- Ensure that all cables and cords are securely connected to the computer and attached devices.
- Ensure that when the computer is on, the fan grill is not blocked (there is air flow around the grill), and the fans are working. If airflow is blocked or the fans are not working, the computer might overheat.
- If Small Computer System Interface (SCSI) devices are installed, ensure that the last external device in each SCSI chain is terminated correctly. For more information, see your SCSI documentation.

Hard disk drive problems

Select your symptom from the following list:

- “Some or all hard disk drives missing from the Setup Utility program” on page 57
- “"No Operating System Found" message or the system not starting from the correct hard disk drive” on page 57

Some or all hard disk drives missing from the Setup Utility program

Solutions:

- Ensure that all hard disk drive signal cables and power cables are connected correctly.
- Ensure that your computer is configured correctly to support the hard disk drives.
  - If your computer is installed with five SATA hard disk drives, ensure that the SATA hard disk drive enablement module (one to five hard disk drives) is installed.
  - If your computer is installed with SAS hard disk drives, ensure that the SAS hard disk drive enablement module (one to five hard disk drives) or the LSI MegaRAID SAS adapter is installed.

If these actions do not correct the problem, run the diagnostic program Lenovo Solution Center. See “Lenovo Solution Center” on page 64. If you need technical assistance, see Chapter 10 “Getting information, help, and service” on page 153.

"No Operating System Found" message or the system not starting from the correct hard disk drive

Solutions:

- Ensure that all hard disk drive signal cables and power cables are connected correctly. Refer to “Installing or replacing a 3.5-inch storage drive in the storage drive bay” on page 94.
- Ensure that the hard disk drive your computer starts from is listed as the first startup device in the Setup Utility program. Refer to “Selecting a startup device” on page 40.

Note: In rare cases, the hard disk drive with the operating system might get corrupted or damaged. In such cases, you might need to replace the hard disk drive. Refer to “Installing or replacing a 3.5-inch storage drive in the storage drive bay” on page 94.

If these actions do not correct the problem, run the diagnostic program Lenovo Solution Center. See “Lenovo Solution Center” on page 64.

Problems with the keyboard or mouse

This section provides solutions to keyboard-related and mouse-related problems.

The mouse does not work

Solutions:

- Connect the mouse cable to a USB connector or PS/2 mouse connector.

  Note: Depending on your keyboard, integrated USB connectors might be available to be used to connect a USB mouse.
- Install the device drivers for the mouse.
- If you are using a USB mouse, enable the USB connectors in the BIOS settings. For more information, see “Enabling or disabling a device” on page 39.

The pointer on the screen does not move smoothly with the mouse

Solution: Clean the mouse. For more information, see “Optical mouse” on page 50.

The fingerprint reader on the keyboard does not work

Solutions:

- Enroll your fingerprint correctly.
- Never scratch the surface of the reader with a hard, pointed object.
- Never scrap the surface of the reader with your nail or anything hard.
- Use or touch the reader with a clean finger.
- Ensure that the surface of your finger is the same with the one when you last enrolled.

The wireless keyboard does not work

Solutions:

- If the transceiver communications LED is not on, reconnect the transceiver and the keyboard.
- If the wireless keyboard does not work when the transceiver communications LED is on, restart your computer.

If the problem persists after the restart, ensure that:

- The batteries are installed correctly.
- The batteries still retain their current.
- The distance from the wireless keyboard to the transceiver is less than 10 m (393.7 inches).
- The transceiver is installed fully.

Monitor problems

This section provides solutions to monitor-related problems.

My screen goes blank while the computer is on

Solutions: Your screen saver or power management might have been enabled. Do one of the following:

- Press a key to exit the screen saver.
- Press the power button to resume the computer from sleep or hibernation mode.

The monitor works when I turn on the computer, but goes blank when I start some application programs

Solutions:

- Connect the monitor signal cable from your monitor to an appropriate connector on the computer. A loose cable might cause intermittent problems.
- Install the device drivers for the application programs. Refer to the documentation for the affected application program to check whether any device drivers are required.

The image appears to be flickering

Solutions:

- The screen might be affected by interference from nearby equipment. Magnetic fields around other devices, such as transformers, appliances, fluorescent lights, and other monitors might be causing the problem. Move fluorescent desk lighting or any equipment that produces magnetic fields farther away from the screen. If this does not correct the problem, turn off the computer. Then, adjust the placement of the computer and other devices so that they are at least 305 mm (12 inches) apart. Turn on the computer.
- Reset the refresh rate supported by your computer.
  1. Right-click a blank area on the desktop.
  2. Depending on your Windows version, do one of the following:
     - For Windows 7 or Windows 8.1: Click **Screen resolution** → **Advanced settings**.
     - For Windows 10: Click **Display settings**. On the **Display** tab, click **Advanced display settings** → **Display adapter properties**.
  3. Click the **Monitor** tab, and then reset the refresh rate to be the highest and noninterlaced.

The image is discolored

Solution: The monitor might be affected by interference from nearby equipment. Move fluorescent desk lighting or any equipment that produces magnetic fields further away from the monitor. If the problem persists, do the following:

1. Turn off the monitor.
2. Adjust the placement of the monitor and other devices so that they are at least 305 mm (12 inches) apart.
3. Turn on the monitor.

Networking problems

The following are the most common networking problems. Select your networking problem from the following list:

- “Ethernet problems” on page 59
- “My computer cannot establish network connections by the built-in wireless networking card” on page 60
- “Sound does not come from the Bluetooth headset or headphone” on page 60

For more information, see “Windows help system” on page 153.

Ethernet problems

My computer cannot connect to the network

Solution: Ensure that:

- The cable is installed properly.

  The network cable must be securely connected to both the Ethernet connector of your computer and the RJ45 connector of the hub. The maximum allowable distance from the computer to hub is 100

meters. If the cable is connected and the distance is within acceptable limits but the problem persists, try a different cable.

- The cable is installed properly.
- Update or reinstall the Ethernet LAN driver. See “Keeping your computer current ” on page 49.
- The switch port and the adapter have the same duplex setting.

  If you configured the adapter for full duplex, ensure that the switch port is also configured for full duplex. Setting the wrong duplex mode can degrade performance, cause data loss, or result in lost connections.
- You have installed all networking software that is necessary for your network environment.

  Check with your LAN administrator for the necessary networking software.

The adapter stops working for no reason

Solution: The network driver files might be corrupt or missing. Update the driver by referring to the “Solution” description for the previous problem to ensure that the latest device driver is installed.

The Wake On LAN feature is not working

Solution: Enable the Wake On LAN (WOL) feature in the BIOS program.

My computer is a Gigabit Ethernet model and I use a speed of 1000 Mbps, but the connection fails or errors occur

Solution: Connect the network cable to the Ethernet connector using Category 5 wiring and a 100 BASE-T hub/switch (not 100 BASE-X).

My computer is a Gigabit Ethernet model, but it cannot be connected to the network at 1000 Mbps, but at only 100 Mbps

Solutions:

- Try another cable.
- Set the link partner to auto-negotiate.
- Set the switch to be 802.3ab-compliant (gigabit over copper).

My computer cannot establish network connections by the built-in wireless networking card

Solutions:

- Ensure that your wireless LAN driver is the latest version. Check the Web site and verify the driver version supported by Access Connections is the latest documented in the readme file.
- Ensure that your computer is within the range of a wireless access point.
- Click the Access Connections icon in the Windows notification area to check if the wireless radio is enabled. If the wireless radio is disabled, follow the onscreen instructions to enable it.
- Check the Network Name (SSID) and your encryption information. Use Access Connections to verify this case-sensitive information.

Sound does not come from the Bluetooth headset or headphone

Solution:

1. Exit the application that uses the sound device (for example, Windows Media Player).
2. Open Control Panel.

   Note: For information about how to open Control Panel on Windows 8.1, see “Accessing Control Panel on the Windows 8.1 operating system” on page 24.
3. Click **Hardware and Sound → Sound**.

4. Select the **Playback** tab.
5. If you are using the Headset profile, select **Bluetooth Hands-free Audio** and click the **Set Default** button. If you are using the AV profile, select **Stereo Audio** and click the **Set Default** button.
6. Click **OK** to close the Sound window.

Note: The Bluetooth feature is supported only on some computer models.

I have connected an option to my computer, but it does not work

Solution: Refer to the documentation that comes with the option to ensure that you have connected the option correctly.

Performance and lockup problems

This section provides solutions to performance-related problems of your computer.

Insufficient free hard disk drive space

Solutions: Free up hard disk drive space.

1. Clean out your Inbox, Sent Items, and Deleted Items folders from your e-mail application.
2. Clean up your C drive.
   a. Depending on your Windows version, do one of the following:
      - For Windows 7: Click the Start button to open the Start menu, and then click **Computer**.
      - For Windows 8.1: Open File Explorer.
      - For Windows 10: Click the Start button to open the Start menu, and then click **File Explorer** → **This PC**.
   b. Right-click your C drive and then click **Properties**.
   c. Check the amount of free space, and then click **Disk Cleanup**.
   d. A list of unnecessary file categories is displayed. Select each file category you want to delete, and then click **OK**.
3. Turn some Windows features off or remove some unnecessary programs.
   a. Open Control Panel by doing one of the following:
      - For Windows 7: Click the Start button to open the Start menu, and then click **Control Panel**.
      - For Windows 8.1: See “Accessing Control Panel on the Windows 8.1 operating system” on page 24.
      - For Windows 10: Right-click the Start button to open the Start context menu, and then click **Control Panel**.
   b. View Control Panel using Large icons or Small icons, and then click **Programs and Features**.
   c. Do the following:
      - To turn some Windows features off, click **Turn Windows features on or off**. Follow the instructions on the screen.
      - To remove some unnecessary programs, select the program you want to remove, and then click **Uninstall/Change** or **Uninstall**.

Excessive number of fragmented files

Solution: Use the Windows disk defragmentation or disk optimization feature to clean up the files.

Note: Depending on the volume of the storage drives and amount of data stored on the storage drives, the disk-defragmentation process might take up to several hours.

1. Close any open programs and windows.
2. Depending on your Windows version, do one of the following:
   - For Windows 7: Click the Start button to open the Start menu, and then click **Computer**.
   - For Windows 8.1: Open File Explorer.
   - For Windows 10: Click the Start button to open the Start menu, and then click **File Explorer** → **This PC**.
3. Right-click your C drive and then click **Properties**.
4. Click the **Tools** tab.
5. Depending on your Windows version, do one of the following:
   - For Windows 7: Click **Defragment now**.
   - For Windows 8.1 and Windows 10: Click **Optimize**. Select the desired drive and then click **Optimize**.
6. Follow the instructions on the screen.

Insufficient memory

Solution: Install additional memory modules. For instructions on installing memory modules, see “Installing or replacing a memory module” on page 135.

To purchase memory modules, go to:
http://www.lenovo.com

The printer does not work

Solutions:

- If you are using IEEE-approved printer signal cables, do the following:
  1. Connect the printer signal cable firmly to the correct parallel, serial, or USB connector on the computer.
  2. Load the paper correctly.
  3. Turn on the printer and keep the printer online.
- If you are using non-IEEE-approved printer signal cables, do the following:
  1. Correctly install device drivers and software that come with the printer.
  2. Assign the printer port correctly in your operating system, application program, or BIOS settings. For more information about BIOS settings, see “Using the Setup Utility program” on page 37.

If the problem persists, run the tests described in the documentation that comes with your printer. If you cannot correct the problem, have the computer serviced. See Chapter 10 “Getting information, help, and service” on page 153.

Serial connector cannot be accessed

Solutions:

- Connect the serial cable to the serial connector on the computer and to the serial device. If the serial device has its own power cord, attach the power cord to a grounded electrical outlet.
- Turn on the serial device and keep the device online.
- Install any application programs supplied with the serial device. Refer to the documentation that comes with the serial device for more information.
- If you added one serial-connector adapter, install the adapter correctly.

Software problems

This section provides solutions to software-related problems.

When using a sort feature, dates cannot be sorted in the correct order

Solution: Some programs developed before the year 2000 used only the last two digits of a year to sort dates, assuming the first two digits were 19. Consequently, dates cannot be sorted in the correct order. Check with your software manufacturer to see if any updates are available. Many software manufacturers make updates available from the World Wide Web.

Some application programs do not work as expected

Solutions:

- If you are having difficulty with performing a specific task within an application program, refer to the help system for the program.
- If you are having difficulty with the Windows operating system or one of its components, refer to the Windows help system.
- Check whether the problems are caused by a newly-installed application program.
  1. Ensure that the software is compatible with your computer. Refer to the information supplied with the software for more information.
  2. Verify that other software works correctly on your computer.
  3. Verify that the software you are using works on another computer.
- If you received any error messages while using the program, see the printed documentation that comes with the program or the help system for solutions.
- Check if any updates are available from your manufacturer or Web site. Many software manufacturers make updates available from the World Wide Web.
- If the software program used to work correctly, but does not work correctly now, do the following:
  1. Open Control Panel by doing one of the following:
     - For Windows 7: Click the Start button to open the Start menu, and then click **Control Panel**.
     - For Windows 8.1: See “Accessing Control Panel on the Windows 8.1 operating system” on page 24.
     - For Windows 10: Right-click the Start button to open the Start context menu, and then click **Control Panel**.
  2. View Control Panel using Large icons or Small icons, and then click **Recovery → Open System Restore**.
  3. Follow the instructions on the screen.

My USB connectors cannot be accessed

Solutions:

- Connect the USB cable from the USB connector to the USB device. If the USB device has its own power cord, attach the power cord to a grounded electrical outlet.
- Turn on the USB device and keep the device online.
- Install any device drivers or application programs supplied with the USB device. Refer to the documentation that comes with the USB device for more information.
- Detach and reattach the USB connector to reset the USB device.

Diagnostics

The diagnostic program is used to test hardware components of your computer. The diagnostic program can also report operating-system-controlled settings that interfere with the correct operation of your computer. You can use the preinstalled diagnostic program to diagnose computer problems, if your computer is running the Windows operating system.

Notes:

1. Your computer is preinstalled with the Lenovo Solution Center program for diagnostic purposes. For more information about the Lenovo Solution Center program, see “Lenovo Solution Center” on page 64.
2. If you are unable to isolate and repair the problem yourself after running the diagnostic program, save and print the log files created by the diagnostic program. You will need the log files when you speak to a Lenovo technical support representative.

Lenovo Solution Center

The Lenovo Solution Center program enables you to troubleshoot and resolve computer problems. It combines diagnostic tests, system information collection, security status, and support information, along with hints and tips for maximum system performance.

- Your can download the Lenovo Solution Center program from http://www.lenovo.com/diags.
- If you are using a Windows operating system other than Windows 7, Windows 8.1 or Windows 10, go to http://www.lenovo.com/diags for the latest information on diagnostics for your computer.

To run the Lenovo Solution Center program, see “Lenovo programs” on page 15.

Note: If you cannot isolate and repair the problem yourself after running the program, save and print the log files. You will need the log files when you speak to a Lenovo technical support representative.

For additional information, refer to the Lenovo Solution Center help system.

Hardware diagnostics

Your computer supports the hardware diagnostics function. This function enables your computer to monitor some hardware components in real time for potential issues that might not be easily detectable during normal use. When the computer detects an issue or error, the diagnostic indicator on the front of the computer is illuminated or blinks. See “Locating connectors, controls, and indicators on the front of your computer” on page 2.

For information about the issue or error, do the following:

1. Connect either of the following devices to the diagnostic USB connector on the front of the computer:
   - A USB key
   - An Android™ device with the Lenovo Workstation Diagnostics app installed

   See “Locating connectors, controls, and indicators on the front of your computer” on page 2.
2. Wait about 10 to 15 seconds for the diagnostic data to transfer from the computer to the USB device. During the data transfer, the diagnostic indicator blinks quickly. When the data transfer finishes, the indicator stops blinking and stays on.

   Note: Diagnostic data is available for transfer through the diagnostic USB connector only when the diagnostic indicator is illuminated or blinks at an error detection. In normal conditions, the diagnostic USB connector functions as a standard USB 3.0 connector.

3. Depending on whether you are using a USB key or an Android device (such as a smartphone), do one of the following:
   - If you are using a USB key, go to http://support.lenovo.com/workstation_diagnostics for information about how to read the error data on the USB key.
   - If you are using an Android device with the Lenovo Workstation Diagnostics app installed, open the application for details about the error. For more information on the Lenovo Workstation Diagnostics app, go to http://www.thinkworkstationsoftware.com/diags

For more information about how to use the diagnostic USB connector on your computer, decipher the error codes, or use the Lenovo Workstation Diagnostics app, go to http://www.thinkworkstationsoftware.com/diags.

The hardware diagnostic function is enabled on your computer by default. To disable the function, do the following:

1. Start the Setup Utility program. See “Starting the Setup Utility program” on page 37.
2. From the Setup Utility program main menu, select **Advanced → Diagnostic function**, and then press Enter.
3. Select **Real-time Diagnostic Monitoring** and press Enter. Then select **Disabled** and press Enter.
4. Press F10 to save changes and exit the Setup Utility program.

Chapter 8. Recovery information

This chapter provides information about the recovery solutions. There are a variety of methods to choose from when considering how to recover from a software- or hardware-related problem. Some methods vary depending on the type of operating system that is installed. You can restore the computer settings using a program or the recovery disc set. For more information about using the recovery disc set, see the documentation that comes with the disc set.

This chapter contains the following topics:

- "Recovery information for the Windows 7 operating system" on page 67
- "Recovery information for the Windows 8.1 operating system" on page 72
- "Recovery information for the Windows 10 operating system" on page 73

Recovery information for the Windows 7 operating system

The recovery information in this section only applies to the computers that have the Rescue and Recovery program or the Product Recovery program installed. If the **Enhanced Backup and Restore** icon in the Lenovo ThinkVantage Tools program is dimmed, it indicates that you must install the Rescue and Recovery program manually before enabling its features. To install the Rescue and Recovery program, do the following:

1. Click **Start → All Programs → Lenovo ThinkVantage Tools**, and double-click **Enhanced Backup and Restore**.
2. Follow the instructions on the screen.
3. When the installation process finishes, the **Enhanced Backup and Restore** icon is activated.

This section contains the following topics:

- "Creating and using recovery media" on page 67
- "Performing backup and recovery operations" on page 68
- "Creating and using a rescue medium" on page 70
- "Reinstalling programs and device drivers" on page 70
- "Solving recovery problems" on page 72

Creating and using recovery media

Recovery media enable you to restore the hard disk drive to the factory-default state and put the computer in an operational state after all other recovery methods have failed. Recovery media are useful if you transfer the computer to another area, sell the computer, or recycle the computer. As a precautionary measure, it is important to create recovery media as early as possible. The data on the recovery media can be used for the following purposes:

- Reinstall the programs and device drivers on your computer
- Reinstall the operating system
- Modify the data files on the hard disk drive using the Additional Files

Note: The recovery operations you can perform using recovery media vary depending on the operating system from which the recovery media were created. The recovery media might contain a boot medium and a data medium. Your Microsoft Windows license permits you to create only one data medium. It is recommended that you store the recovery media in a safe place after you have made them.

© Copyright Lenovo 2014, 2015

Creating recovery media

Note: On the Windows 7 operating system, you can create recovery media using discs or external USB storage devices.

To create recovery media on the Windows 7 operating system, click **Start → All Programs → Lenovo ThinkVantage Tools → Factory Recovery Disks**. Then, follow the instructions on the screen.

Using recovery media

Attention: When you use recovery media to restore the hard disk drive to the factory-default state, all the files currently on the hard disk drive will be deleted. These files will be replaced by the factory-default files.

To use recovery media on the Windows 7 operating system, do the following:

1. Depending on the type of your recovery media, connect the boot USB storage device to the computer, or insert the boot disc into the optical drive.
2. Turn on or restart your computer.
3. When you see the logo screen, repeatedly press and release the F12 key. The Startup Device Menu window is displayed.
4. Select the desired startup device and press Enter. The restore process begins.
5. Follow the instructions on the screen to complete the operation.

Note: After restoring your computer hard disk drive to the factory-default state, you might have to reinstall device drivers for some devices. See “Reinstalling programs and device drivers” on page 70.

Performing backup and recovery operations

The Rescue and Recovery program enables you to back up all your hard disk drive contents including the operating system, data files, software programs, and personal settings. You can store the backup at the following locations:

- The Rescue and Recovery workspace
- The secondary hard disk drive if a secondary hard disk drive is installed in your computer
- An external USB hard disk drive connected to your computer
- A network drive
- Recordable discs (a recordable optical drive is required for this option)

After you have completed the backup operation, you can restore parts or whole of the data on the hard disk drive.

Performing a backup operation

To perform a backup operation using the Rescue and Recovery program on the Windows 7 operating system, do the following:

1. From the Windows desktop, click **Start → All Programs → Lenovo ThinkVantage Tools → Enhanced Backup and Restore**. The Rescue and Recovery program opens.
2. In the Rescue and Recovery main window, click the **Launch advanced Rescue and Recovery** arrow.
3. Click **Back up your hard drive** and select backup operation options. Then, follow the instructions on the screen to complete the backup operation.

Performing a recovery operation

This section provides the following topics:

- “Performing a recovery operation from Windows 7” on page 69

- “Performing a recovery operation from the Rescue and Recovery workspace” on page 69

Performing a recovery operation from Windows 7

To perform a recovery operation using the Rescue and Recovery program on the Windows 7 operating system, do the following:

1. From the Windows desktop, click **Start → All Programs → Lenovo ThinkVantage Tools → Enhanced Backup and Restore**. The Rescue and Recovery program opens.
2. In the Rescue and Recovery main window, click the **Launch advanced Rescue and Recovery** arrow.
3. Click the **Restore your system from a backup** icon.
4. Follow the instructions on the screen to complete the recovery operation.

Performing a recovery operation from the Rescue and Recovery workspace

The Rescue and Recovery workspace resides in a protected and hidden area of your hard disk drive that operates independently from the Windows operating system. The Rescue and Recovery workspace enables you to perform recovery operations even if you cannot start the Windows operating system. You can perform the following recovery operations from the Rescue and Recovery workspace:

- Rescue files from your hard disk drive or from a backup:
  You can locate files on your hard disk drive and transfer them to a network drive or other recordable media, such as a USB device or a disc. This solution is available even if you did not back up your files or if changes were made to the files since your last backup operation. You also can rescue individual files from a Rescue and Recovery backup located on your local hard disk drive, a USB device, or a network drive.
- Restore your hard disk drive from a Rescue and Recovery backup:
  If you have backed up your hard disk drive using the Rescue and Recovery program, you can restore the hard disk drive from a Rescue and Recovery backup, even if you cannot start the Windows operating system.
- Restore your hard disk drive to the factory-default state:
  You can restore the complete contents of your hard disk drive to the factory-default state even if you cannot start the Windows operating system. If you have multiple partitions on your hard disk drive, you have the option to restore the C: partition and leave the other partitions intact.

Attention: You can restore the hard disk drive from a Rescue and Recovery backup or restore the hard disk drive to the factory-default settings. During either process, all files on the primary hard disk drive partition (usually drive C:) will be deleted. If possible, make copies of important files. If you cannot start the Windows operating system, you can use the rescue files feature of the Rescue and Recovery workspace to copy files from your hard disk drive to other media.

To perform a recovery operation from the Rescue and Recovery workspace, do the following:

1. Turn on or restart your computer.
2. When you see the logo screen, press Enter, and then press F11 to enter the Rescue and Recovery workspace.
3. If you have set a Rescue and Recovery password, enter your password when prompted. The Rescue and Recovery workspace opens after a short delay.

   Note: If the Rescue and Recovery workspace fails to open, see “Solving recovery problems” on page 72.
4. Do one of the following:
   - To rescue files from your hard disk drive, click **Rescue files** and follow the instructions on the screen.
   - To restore your hard disk drive from a Rescue and Recovery backup or to restore your hard disk drive to the factory-default state, click **Full Restore** and follow the on-screen instructions.

     Note: After restoring your computer hard disk drive to the factory-default state, you might have to reinstall device drivers for some devices. See “Reinstalling programs and device drivers” on page 70.

For more information about the features of the Rescue and Recovery workspace, click **Help**.

Creating and using a rescue medium

Create rescue media using discs or USB storage devices as early as possible. You can use a rescue medium to recover from failures that prevent you from gaining access to the Windows environment or the Rescue and Recovery workspace on your hard disk drive.

Notes:

- The recovery operations you can perform using a rescue medium vary depending on the operating system.
- The rescue disc can be started in all types of optical drives.

Creating a rescue medium

To create a rescue medium on the Windows 7 operating system, do the following:

1. From the Windows desktop, click **Start → All Programs → Lenovo ThinkVantage Tools → Enhanced Backup and Restore**. The Rescue and Recovery program opens.
2. In the Rescue and Recovery main window, click the **Launch advanced Rescue and Recovery** arrow.
3. Click the **Create Rescue Media** icon. The "Create Rescue and Recovery Media" window opens.
4. In the **Rescue Media** area, select the type of the rescue medium you want to create. You can create a rescue medium using a disc, a USB storage device with sufficient capacity, or a secondary internal hard disk drive.
5. Click **OK** and follow the instructions on the screen to create a rescue medium.

Using a rescue medium

Depending on whether you have created a rescue medium using a disc or a USB hard disk drive, do one of the following:

- If you have created a rescue medium using a disc, do the following:
  1. Turn on or restart your computer.
  2. When you see the logo screen, repeatedly press and release the F12 key. The Startup Device Menu window is displayed.
  3. Select the desired optical drive as the first boot device. Then, insert the rescue disc into the optical drive and press Enter. The rescue medium starts.
- If you have created a rescue medium using a USB hard disk drive, do the following:
  1. Connect the USB hard disk drive to one of the USB connectors on your computer.
  2. Turn on or restart your computer.
  3. When you see the logo screen, repeatedly press and release the F12 key. The Startup Device Menu window is displayed.
  4. Select the USB hard disk drive as the first boot device and press Enter. The rescue medium starts.

When the rescue medium starts, the Rescue and Recovery workspace opens. The help information for each feature is available from the Rescue and Recovery workspace. Follow the instructions to complete the recovery process.

Reinstalling programs and device drivers

This section provides the following items:

- "Reinstalling preinstalled programs and device drivers" on page 71
- "Reinstalling programs and device drivers that are not preinstalled" on page 71

Reinstalling preinstalled programs and device drivers

Your computer enables you to reinstall preinstalled programs and device drivers.

Reinstalling preinstalled programs

To reinstall programs preinstalled on your Lenovo computer, do the following:

1. Turn on the computer.
2. Go to C:\SWTOOLS.
3. Open the apps folder and locate the subfolder that is named after the program preinstalled on your computer.
4. Open the subfolder and locate the EXE file.
5. Double-click the EXE file and follow the instructions on the screen to complete the installation.

Reinstalling preinstalled device drivers

Attention: Reinstalling device drivers will change the current configuration of your computer. Reinstall device drivers only when it is necessary to correct a problem with your computer.

To reinstall the device driver for a factory-installed device, do the following:

1. Turn on the computer.
2. Go to C:\SWTOOLS.
3. Open the DRIVERS folder and locate the subfolder that is named after the factory-installed device in your computer, such as AUDIO or VIDEO.
4. Open the subfolder.
5. Do one of the following:
   - Locate the EXE file. Double-click the EXE file and follow the instructions on the screen to complete the installation.
   - Locate the readme file with the .txt extension. The device driver installation information is included in the readme file. Follow the instructions to complete the installation.
   - If the device subfolder contains an INF file and you want to install the device driver using the INF file, see the Windows Help and Support information system for detailed information.

Note: For more information about the latest device drivers, see “Getting the latest system updates” on page 49.

Reinstalling programs and device drivers that are not preinstalled

Your computer enables you to reinstall programs and device drivers that are not preinstalled.

Reinstalling programs that are not preinstalled

If a software program you installed on your computer is not working correctly, you might need to uninstall and then reinstall it. Reinstalling a program overwrites the existing program files and usually fixes any problems that you might have had with the program.

To uninstall a program from your system, refer to the Microsoft Windows help system.

To reinstall most commercially available programs on your system, refer to the Microsoft Windows help system together with the documentation provided with the program.

Reinstalling device drivers that are not preinstalled

To reinstall a device driver for an option you installed, refer to the documentation that comes with the option.

Note: Reinstall device drivers will change the current configuration of your computer. Reinstall device drivers only when it is necessary to correct a problem with your computer.

Solving recovery problems

Note: Ensure that your rescue device is set as the first boot device in the startup device sequence in the Setup Utility program. See “Selecting a startup device” on page 40 for detailed information about temporarily or permanently changing the startup device sequence. For more information about the Setup Utility program, see “Using the Setup Utility program” on page 37.

If you cannot access the Rescue and Recovery workspace or the Windows environment, do one of the following:

- Use a rescue medium to start the Rescue and Recovery workspace. See “Creating and using a rescue medium” on page 70.
- Use recovery media if all other methods of recovery have failed and you must restore the hard disk drive to the factory-default settings. See “Creating and using recovery media” on page 67.

It is important to create a rescue medium and a set of recovery media as early as possible and store them in a safe place for future use.

Recovery information for the Windows 8.1 operating system

This section contains the following topics:

- “Refreshing your computer” on page 72
- “Resetting your computer to the factory-default settings” on page 72
- “Using the advanced startup options” on page 73
- “Recovering your operating system if Windows 8.1 fails to start” on page 73

Refreshing your computer

If your computer does not perform well and the problem might be caused by a recently installed program, you can refresh your computer.

Attention: If you refresh your computer, the programs preinstalled on your computer and the programs that you installed from Windows Store will be reinstalled. However, all other programs will be uninstalled.

To refresh your computer, do the following:

1. Move the pointer to the top-right or bottom-right corner of the screen to display the charms. Click **Settings → Change PC settings → Update and recovery → Recovery**.
2. In the **Refresh your PC without affecting your files** section, click **Get started**.

Resetting your computer to the factory-default settings

You can reset your computer to the factory-default settings. Resetting the computer will reinstall the operating system and all the programs that come with your computer.

Attention: If you reset your computer, all your personal files and settings will be deleted. To avoid data loss, make a backup copy of all the data that you want to keep.

To reset your computer, do the following:

1. Move the pointer to the top-right or bottom-right corner of the screen to display the charms. Click **Settings → Change PC settings → Update and recovery → Recovery**.

2. In the **Remove everything and reinstall Windows** section, click **Get started**.

Using the advanced startup options

Advanced startup options enable you to change the startup settings of your Windows operating system, start the computer from an external device, or restore the Windows operating system from a system image.

To use the advanced startup options, do the following:

1. Move the pointer to the top-right or bottom-right corner of the screen to display the charms. Click **Settings → Change PC settings → Update and recovery → Recovery**.
2. In the **Advanced startup** section, click **Restart now → Troubleshoot → Advanced options**.
3. Restart your computer following the instructions on the screen.

Recovering your operating system if Windows 8.1 fails to start

The Windows recovery environment on your computer is capable of operating independently from the Windows 8.1 operating system. It enables you to recover or repair the operating system even if the Windows 8.1 operating system fails to start.

After two consecutive failed boot attempts, the Windows recovery environment starts automatically. Then you can choose repair and recovery options by following the instructions on the screen.

Note: Ensure that your computer is connected to ac power during the recovery process.

For more details about the recovery solutions provided on computers preinstalled with the Windows 8.1 operating system, refer to the help information system of the Windows 8.1 operating system.

Recovery information for the Windows 10 operating system

To recover your Windows 10 operating system, use the following solutions:

- Use Windows recovery solutions.
  - Use recovery solutions in Windows Settings.
    1. Click the Start button to open the Start menu.
    2. Click **Settings → Update & security → Recovery**.
    3. Choose the appropriate recovery solution by following the instructions on the screen.
  - Use System Restore to restore system files and settings to an earlier point.
    1. Right-click the Start button to open the Start context menu.
    2. Click **Control Panel**. View Control Panel by Large icons or Small icons, and then click **Recovery → Open System Restore**.
    3. Follow the instructions on the screen.
  - Use the File History tool to restore your files from a backup.

    Note: If you use the File History tool to restore your files from a backup, ensure that you backed up your data earlier with the tool.
    1. Right-click the Start button to open the Start context menu.
    2. Click **Control Panel**. View Control Panel by Large icons or Small icons, and then click **File History → Restore personal files**.
    3. Follow the instructions on the screen.
  - Use the Windows recovery environment by doing one of the following:

- After several consecutive failed boot attempts, the Windows recovery environment might start automatically. Follow the instructions on the screen to choose the appropriate recovery solution.
- Select the recovery medium you created earlier with the Windows tool as the startup device. See “Selecting a temporary startup device” on page 40. Then, follow the instructions on the screen to choose the appropriate recovery solution.

  Note: To create a recovery medium, see “Good maintenance practices” on page 51.

- Use the recovery USB key provided by Lenovo to restore the entire storage drive to the factory-default settings.
  - If your computer comes with the recovery USB key, follow the instructions shipped with the USB key.
  - If your computer does not come with the recovery USB key, contact the Lenovo Customer Support Center to order a recovery USB key. For a list of Lenovo Support phone numbers, go to http://www.lenovo.com/support/phone. If you cannot find the support telephone number for your country or region, contact your Lenovo reseller.

Chapter 9. Installing or replacing hardware

This chapter provides instructions on how to install or replace hardware for your computer.

Handling static-sensitive devices

Do not open the static-protective package containing the new part until the defective part has been removed and you are ready to install the new part. Static electricity, although harmless to you, can seriously damage computer components and parts.

When you handle parts and other computer components, take these precautions to avoid static-electricity damage:

- Limit your movement. Movement can cause static electricity to build up around you.
- Always handle parts and other computer components carefully. Handle PCI cards, memory modules, system boards, and microprocessors by the edges. Never touch any exposed circuitry.
- Prevent others from touching the parts and other computer components.
- Touch the static-protective package containing the part to a metal expansion-slot cover or other unpainted metal surface on the computer for at least two seconds. This reduces static electricity from the package and your body before you install or replace a new part.
- When possible, remove the new part from the static-protective package, and install it directly in the computer without setting the part down. When this is not possible, place the static-protective package that the part came in on a smooth, level surface and place the part on the package.
- Do not place the part on the computer cover or other metal surface.

Installing or replacing hardware

This section provides instructions on how to install or replace hardware for your computer. You can expand the capabilities of your computer and maintain your computer by installing or replacing hardware.

Attention: Do not open your computer or attempt any repair before reading and understanding the “Read this first: Important safety information” on page v.

Notes:

- Use only computer parts provided by Lenovo.
- When installing or replacing an option, use the appropriate instructions in this section along with the instructions that come with the option.

Installing external options

You can connect external options to your computer, such as external speakers, a printer, or a scanner. For some external options, you must install additional software in addition to making the physical connection. When installing an external option, see “Locating connectors, controls, and indicators on the front of your computer” on page 2 and “Locating connectors on the rear of your computer” on page 2 to identify the required connector. Use the instructions shipped with the option to help you make the connection and install any software or device drivers that are required for the option.

Removing the computer cover

Attention: Do not open your computer or attempt any repair before reading and understanding the “Read this first: Important safety information” on page v.

© Copyright Lenovo 2014, 2015

CAUTION:

Before you open the computer cover, turn off the computer and wait several minutes until the computer is cool.

To remove the computer cover, do the following:

1. Remove all media from the drives and turn off all attached devices and the computer. Then, disconnect all power cords from electrical outlets and disconnect all cables that are connected to the computer.
2. Unlock any locking device that secures the computer cover, such as a key lock, a padlock, or a Kensington-style cable lock. See Chapter 4 “Security” on page 33.
3. Press the pit 1 on the handle of the computer cover latch so that the handle is lifted. Pivot the handle as shown and pull the handle to remove the cover from the chassis.

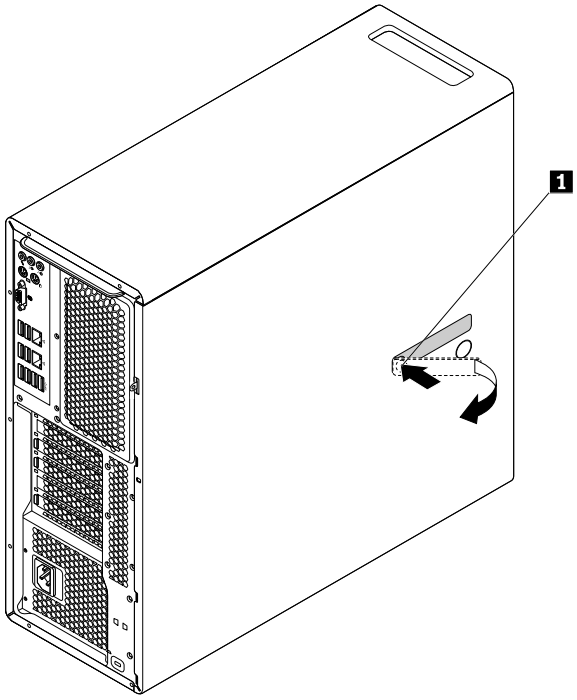

Figure 12. Removing the computer cover

Removing and reinstalling the direct cooling air baffle

Attention: Do not open your computer or attempt any repair before reading and understanding the “Read this first: Important safety information” on page v.

To remove the direct cooling air baffle, do the following:

1. Remove all media from the drives and turn off all attached devices and the computer. Then, disconnect all power cords from electrical outlets and disconnect all cables that are connected to the computer.
2. Remove the computer cover. See “Removing the computer cover” on page 75.

3. Grasp the handle in the direct cooling air baffle and pull the direct cooling air baffle out of the computer.

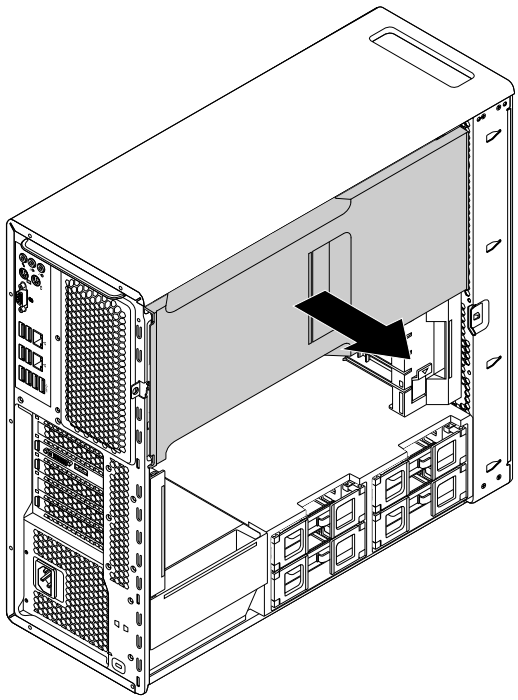

Figure 13. Removing the direct cooling air baffle

To reinstall the direct cooling air baffle, do the following:

1. Align the plastic boards on the top and bottom sides of the direct cooling air baffle with the small gaps 1 in the computer chassis.

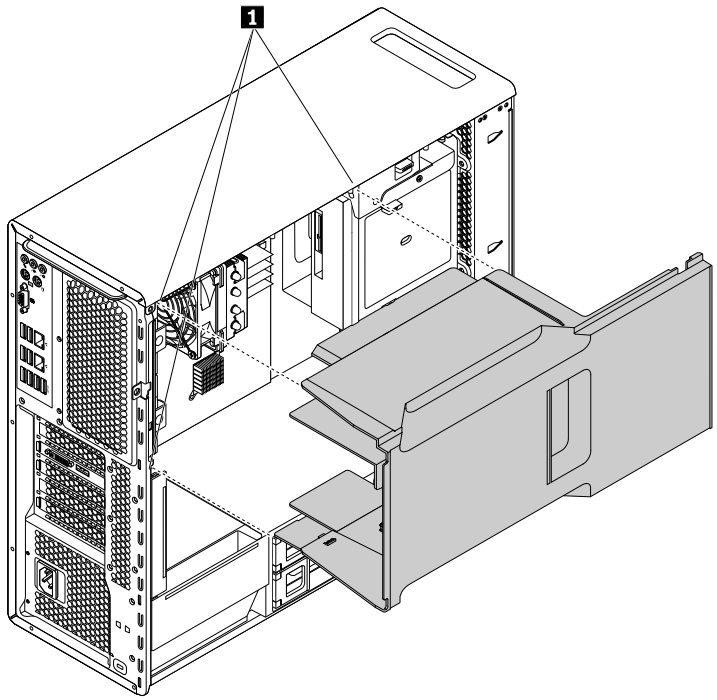

Figure 14. Installing the direct cooling air baffle

2. Push the direct cooling air baffle in until it is placed firmly in position.

   Note: If necessary, adjust the position of the direct cooling air baffle slightly to avoid the interference from other components in the chassis.

What to do next:

- To work with another piece of hardware, go to the appropriate section.
- To complete the installation or replacement, go to “Completing the parts replacement” on page 149.

Installing or replacing a device in the optical drive bay

Attention: Do not open your computer or attempt any repair before reading and understanding the “Read this first: Important safety information” on page v.

The optical drive bay of your computer supports the following devices:

- Optical drive
- Flex module
- Front-access storage enclosure

The following instructions on how to install or replace an optical drive also apply to the other two devices.

To install or replace an optical drive, do the following:

1. Remove all media from the drives and turn off all attached devices and the computer. Then, disconnect all power cords from electrical outlets and disconnect all cables that are connected to the computer.
2. Remove the computer cover. See “Removing the computer cover” on page 75.

3. Remove the direct cooling air baffle. See “Removing and reinstalling the direct cooling air baffle” on page 76.
4. Locate the optical drive bay that you want to use. See “Locating components” on page 6.
5. Depending on whether you are installing or replacing an optical drive, do one of the following:
   - If you are installing a new optical drive, press the clip on the bottom of the optical drive bay from the front of the computer to remove the plastic cover. If there is a metal static shield installed in the optical drive bay, remove the metal static shield.
   - If you are replacing an old optical drive, disconnect the signal cable and the power cable from the rear of the optical drive. Then, press the tabs **1** toward each other as shown, and at the same time push the rear of the optical drive to slide it out of the computer.

     Note: If you are replacing a flex module or a front-access storage enclosure, remove any additional cables first.

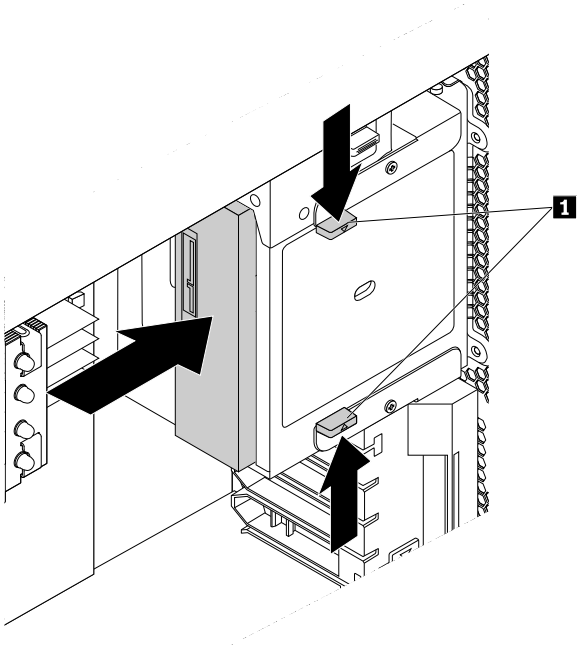

Figure 15. Removing the optical drive

6. Press the tabs **1** toward each other as shown, and at the same time slide the new optical drive halfway into the bay from the front of the computer. Then, release the tabs and continue to slide the optical drive in until it snaps into position.

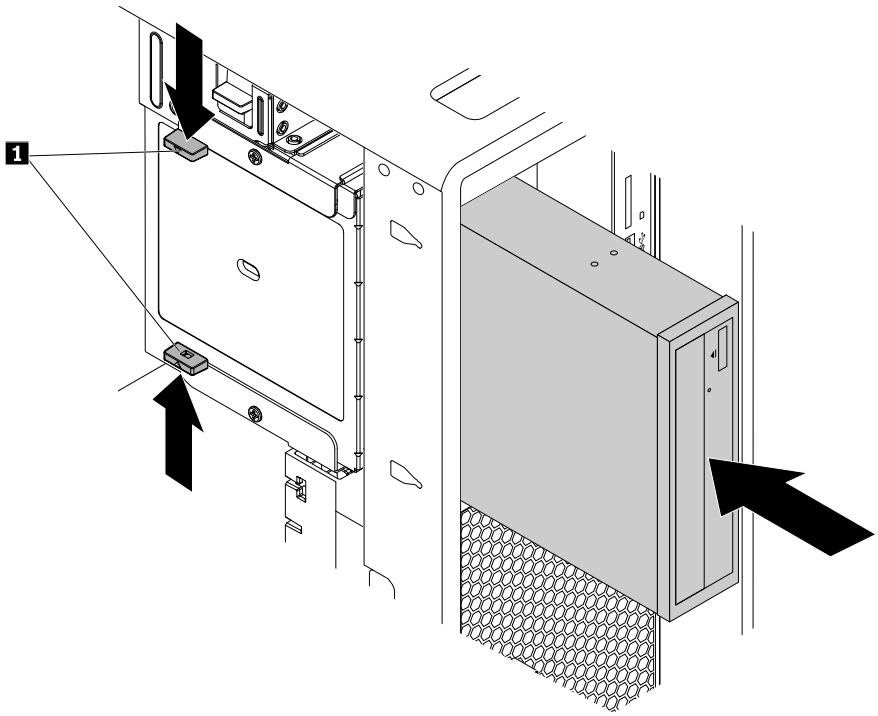

Figure 16. Installing the optical drive

7. Connect the signal cable and the power cable to the new optical drive.

   Note: If you are replacing a flex module or front-access storage enclosure, connect additional cables between the bay and the system board or adapter cards.

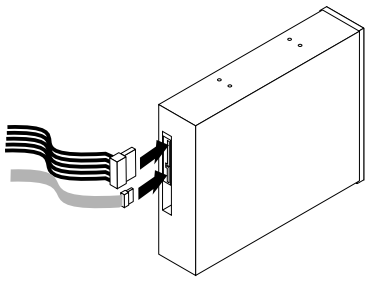

Figure 17. Connecting cables to the optical drive

8. Reinstall the direct cooling air baffle. See “Removing and reinstalling the direct cooling air baffle” on page 76.

What to do next:

- To work with another piece of hardware, go to the appropriate section.

- To complete the installation or replacement, go to “Completing the parts replacement” on page 149.

Installing or replacing a device in the 5.25-inch flex module

Attention: Do not open your computer or attempt any repair before reading and understanding the “Read this first: Important safety information” on page v.

This section provides instructions on how to install or replace a device in the 5.25-inch flex module. Installing and replacing a device in the 5.25-inch flex module involves the following operations:

- “Installing or replacing a slim optical drive in the flex module” on page 81
- “Installing or replacing a card reader in the flex module” on page 83
- “Installing or replacing an eSATA connector or IEEE 1394 connector in the flex module” on page 86

Installing or replacing a slim optical drive in the flex module

To install or replace a slim optical drive in the flex module, do the following:

1. Remove the flex module from the front of the computer. See “Installing or replacing a device in the optical drive bay” on page 78.
2. Lift the clip on the rear of the flex module and slide the flex module cover to the rear of the flex module to remove the cover.

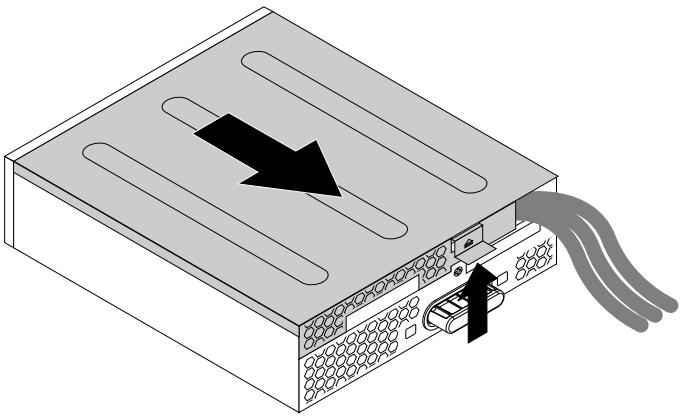

Figure 18. Removing the flex module cover

3. If you are installing a new slim optical drive, press the two metal clips **1** to remove the plastic clip with the two screws as shown. Remove the two screws and then go to step 4.

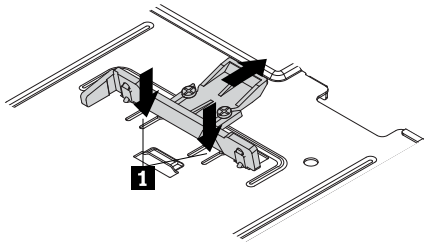

Figure 19. Removing the plastic clip with the two screws

If you are replacing an old slim optical drive, do the following:

a. press the button as shown to remove the slim optical drive from the flex module.

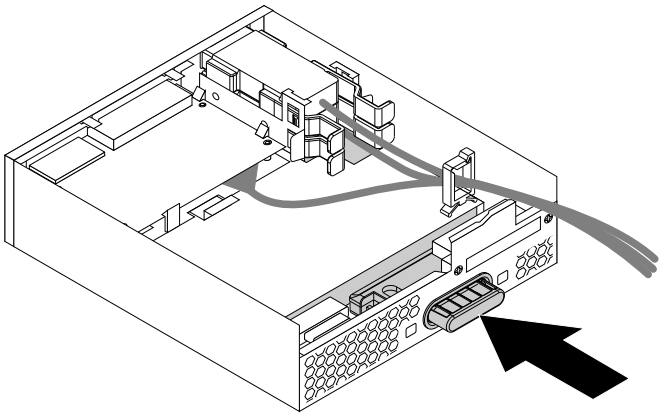

Figure 20. Removing the slim optical drive from the flex module

b. Remove the two screws that secure the clip to remove the plastic clip from the rear of the slim optical drive.

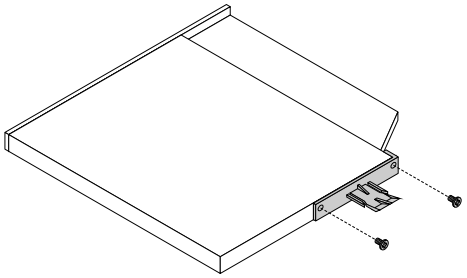

Figure 21. Removing the plastic clip from the slim optical drive

4. Install the two screws to secure the plastic clip on the rear of the new slim optical drive.

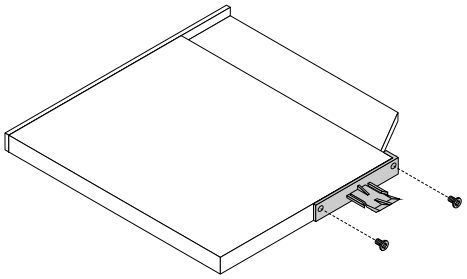

Figure 22. Installing the plastic clip to the slim optical drive

5. Slide the new slim optical drive with the plastic clip into the flex module until the slim optical drive snaps into position.

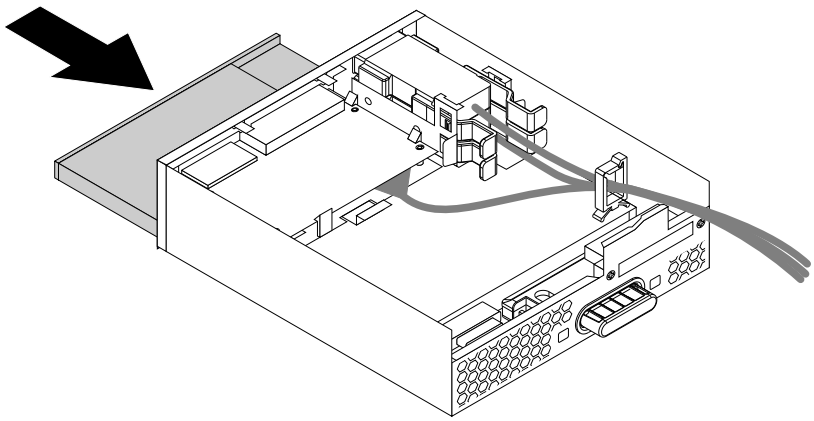

Figure 23. Installing the slim optical drive in the flex module

6. Position the flex module cover on the flex module so that the rail guides on the bottom of the flex module cover engage the rails on the flex module. Then, push the cover to the front of the flex module until it snaps into position.

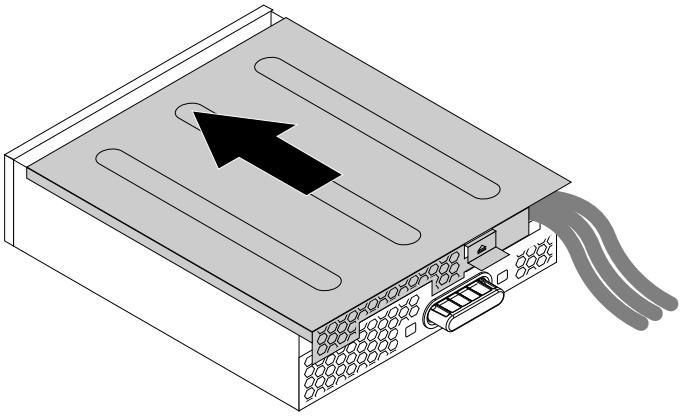

Figure 24. Reinstalling the flex module cover

What to do next:

- To work with another piece of hardware, go to the appropriate section.
- To complete the installation or replacement, go to “Completing the parts replacement” on page 149.

Installing or replacing a card reader in the flex module

To install or replace a card reader in the flex module, do the following:

1. Remove the flex module from the front of the computer. See “Installing or replacing a device in the optical drive bay” on page 78.

2. Lift the clip on the side of the flex module upward and slide the flex module cover to the rear of the flex module to remove the cover.

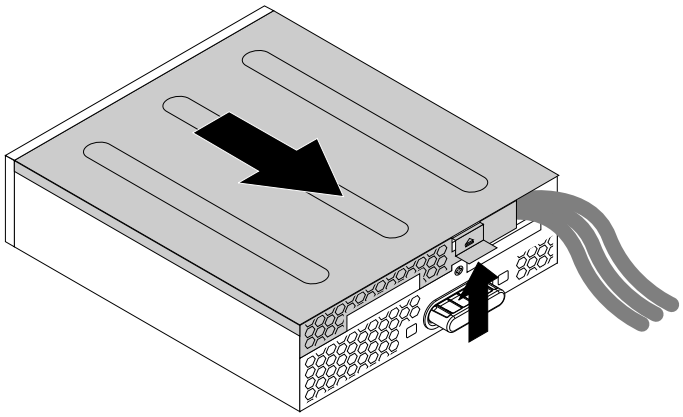

Figure 25. Removing the flex module cover

3. If you are replacing a card reader, do the following:
   a. Disconnect the card reader cable from the system board. See “Locating parts on the system board” on page 6.
   b. Pull the clip as shown to remove the card reader with the card reader retaining bracket out of the flex module.

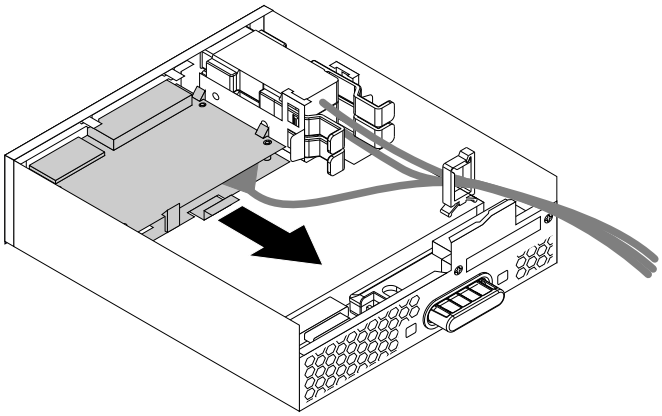

Figure 26. Removing the card reader in the flex module

   c. Flex the four clips on the sides of the card reader retaining bracket to remove the card reader from the bracket.

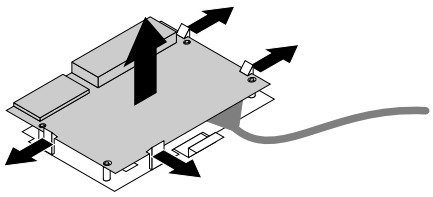

Figure 27. Removing the card reader from the card reader retaining bracket

4. To install the a new card reader into the card reader retaining bracket, align the four holes in the card reader with the corresponding studs on the bracket and then press the new card reader downward until it snaps into position.

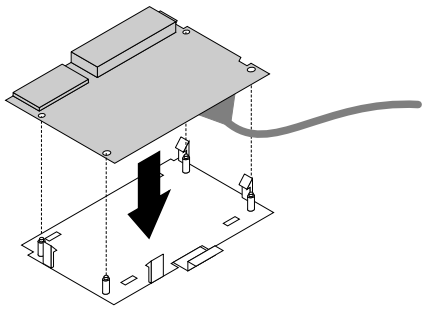

Figure 28. Installing the card reader into the card reader retaining bracket

5. Note the orientation of the new card reader and route the card reader cable into the cable clip. Hold the clip on the card reader retaining bracket to insert the new card reader into the card reader slot in flex module until it snaps into position.

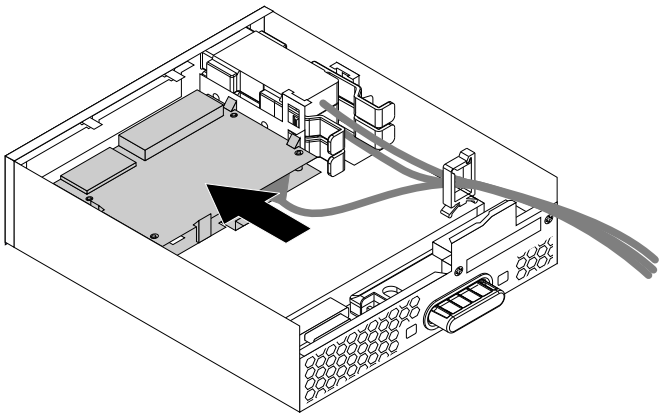

Figure 29. Installing the card reader in the flex module

6. Position the flex module cover on the flex module so that the rail guides on the bottom of the flex module cover engage the rails on the flex module. Then, push the cover to the front of the flex module until it snaps into position.

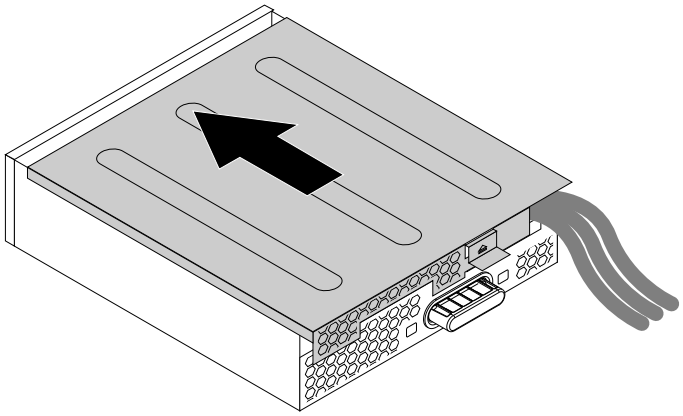

Figure 30. Reinstalling the flex module cover

7. Connect the card reader cable to the USB 2.0 connector or card reader connector on the system board. See “Locating parts on the system board” on page 6.

What to do next:

- To work with another piece of hardware, go to the appropriate section.
- To complete the installation or replacement, go to “Completing the parts replacement” on page 149.

Installing or replacing an eSATA connector or IEEE 1394 connector in the flex module

To install or replace an eSATA connector or IEEE 1394 connector in the flex module, do the following:

1. Slide the flex module out of the front of the computer. See “Installing or replacing a device in the optical drive bay” on page 78.
2. Lift the clip on the side of the flex module upward and slide the flex module cover to the rear of the flex module to remove the cover.

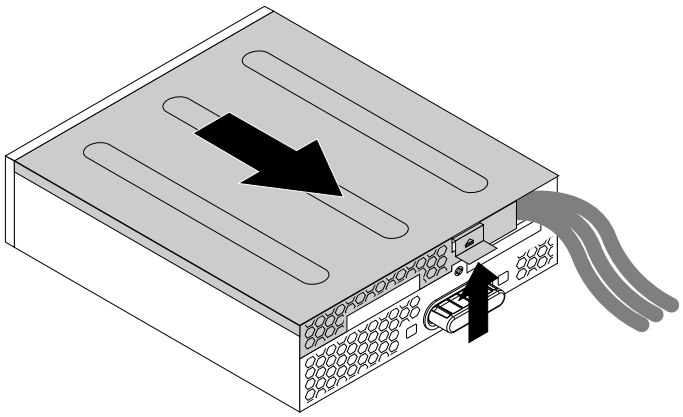

Figure 31. Removing the flex module cover

3. If you are replacing an eSATA connector or IEEE 1394 connector, do the following:

a. Disconnect the eSATA connector or IEEE 1394 connector cable from the system board. See “Locating parts on the system board” on page 6.

b. Press the two clips toward each other as shown to pull the eSATA connector or IEEE 1394 connector out of the flex module.

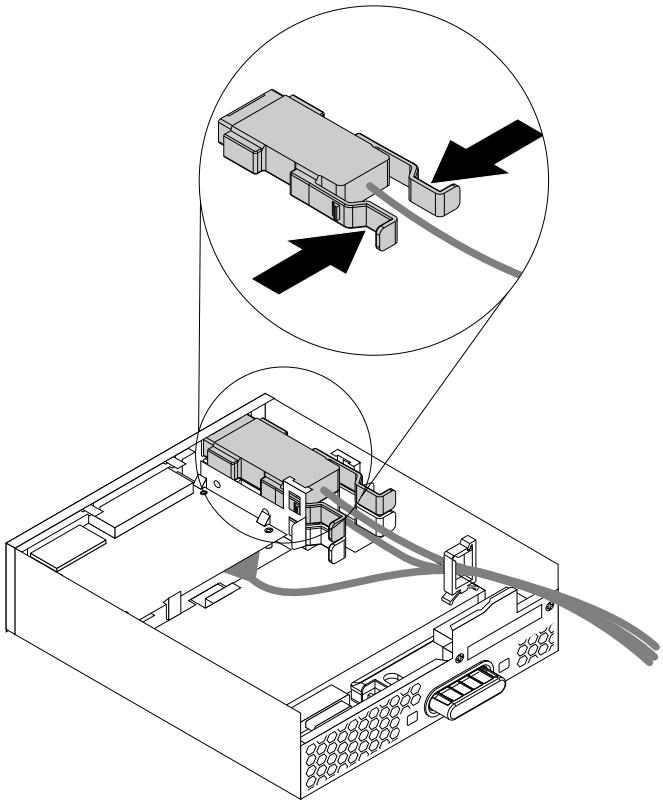

Figure 32. Removing the eSATA connector or IEEE 1394 connector in the flex module

4. Note the orientation of the eSATA connector or IEEE 1394 connector and route the eSATA connector or IEEE 1394 connector cable into the cable clip.
5. Place the eSATA connector or IEEE 1394 connector into the metal retainer. Then insert the eSATA connector or IEEE 1394 connector into the corresponding slot in the flex module as shown.

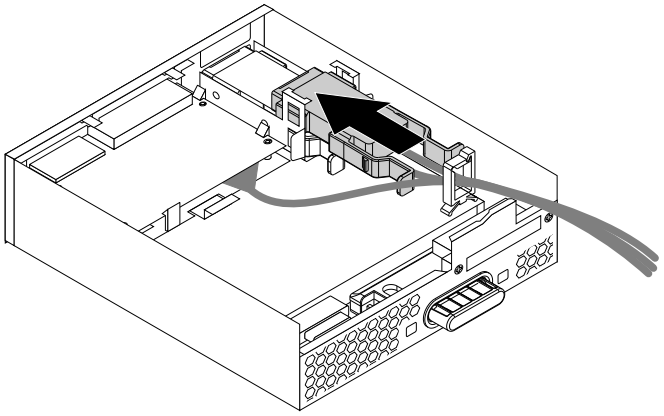

Figure 33. Installing the eSATA connector or IEEE 1394 connector in the flex module

6. Position the flex module cover on the flex module so that the rail guides on the bottom of the flex module cover engage the rails on the flex module. Then, push the cover to the front of the flex module until it snaps into position.

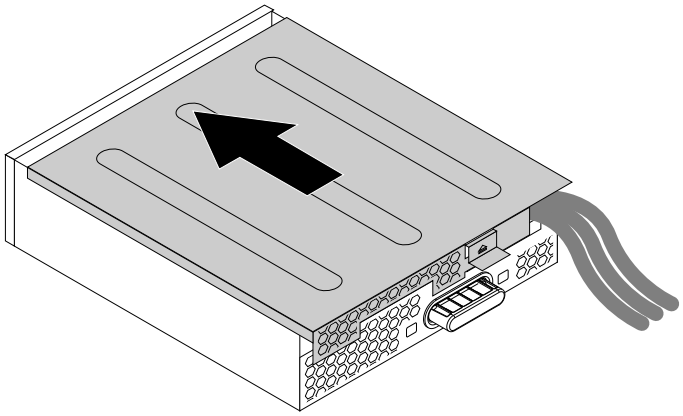

Figure 34. Reinstalling the flex module cover

7. Connect the eSATA connector or IEEE 1394 connector cable to the corresponding connector on the system board. See “Locating parts on the system board” on page 6.

What to do next:

- To work with another piece of hardware, go to the appropriate section.
- To complete the installation or replacement, go to “Completing the parts replacement” on page 149.

Removing and reinstalling the optical drive bracket

Attention: Do not open your computer or attempt any repair before reading and understanding the “Read this first: Important safety information” on page v.

To remove the optical drive bracket, do the following:

1. Remove all media from the drives and turn off all attached devices and the computer. Then, disconnect all power cords from electrical outlets and disconnect all cables that are connected to the computer.
2. Remove the computer cover. See “Removing the computer cover” on page 75.
3. Remove the direct cooling air baffle. See “Removing and reinstalling the direct cooling air baffle” on page 76.
4. Remove the device that is installed in the bracket. See “Installing or replacing a device in the optical drive bay” on page 78.

5. Press the retaining clip 1 on the top of the optical drive bracket and pivot the bracket outward from the rear to remove it from the computer chassis.

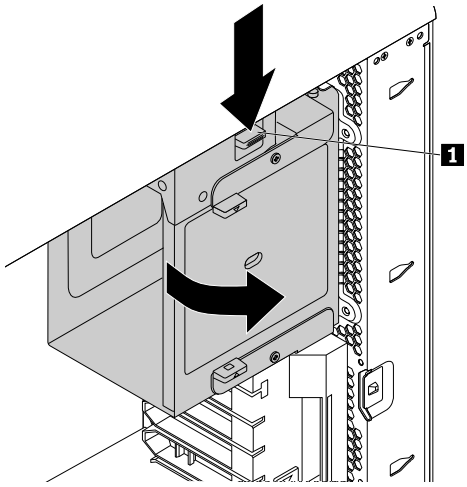

Figure 35. Removing the optical drive bracket

To reinstall the optical drive bracket, do the following:

1. Position the optical drive bay into the chassis at a relative angle of about 45° as shown. Align the two posts on the top and the bottom of the optical drive bracket with the notches in the computer chassis.

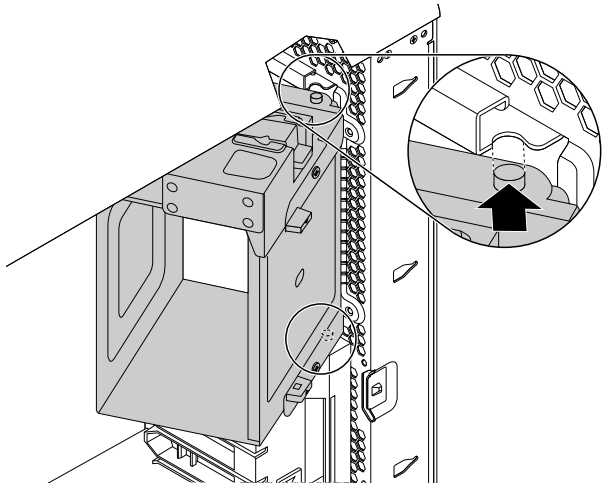

Figure 36. Positioning the optical drive bracket into the chassis

2. Pivot the optical drive bracket inward as shown until it snaps into position.

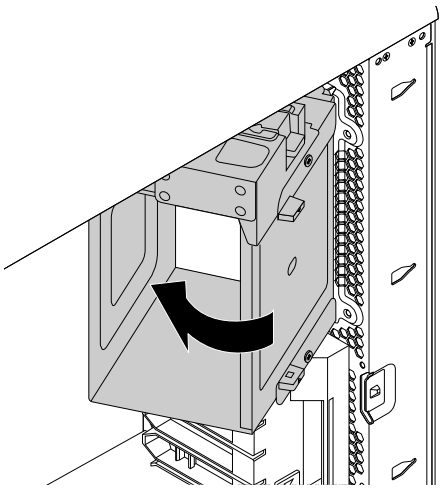

Figure 37. Installing the optical drive bracket

3. Reinstall the direct cooling air baffle. See “Removing and reinstalling the direct cooling air baffle” on page 76.

What to do next:

- To work with another piece of hardware, go to the appropriate section.
- To complete the installation or replacement, go to “Completing the parts replacement” on page 149.

Replacing the cover presence switch

Attention: Do not open your computer or attempt any repair before reading and understanding the “Read this first: Important safety information” on page v.

To replace the cover presence switch, do the following:

1. Remove all media from the drives and turn off all attached devices and the computer. Then, disconnect all power cords from electrical outlets and disconnect all cables that are connected to the computer.
2. Remove the computer cover. See “Removing the computer cover” on page 75.
3. Remove the direct cooling air baffle. See “Removing and reinstalling the direct cooling air baffle” on page 76.
4. Remove the optical drive bracket. See “Removing and reinstalling the optical drive bracket” on page 88.
5. Locate the cover presence switch. See “Locating components” on page 6.
6. Disconnect the cover presence switch cable from the system board.

7. Slide the cover presence switch as shown to remove it from the computer chassis.

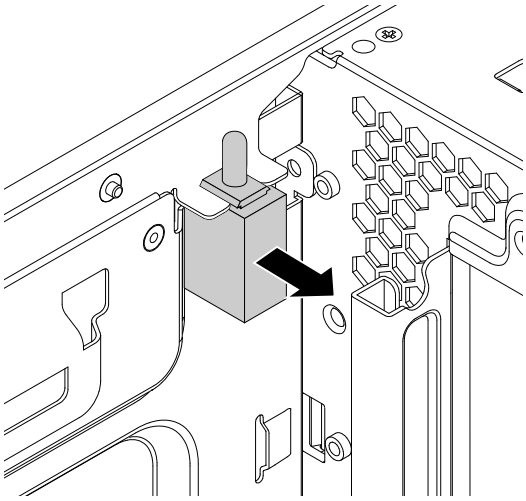

Figure 38. Removing the cover presence switch

8. Align the two notches in the new cover presence switch with the two tabs on the computer chassis, and then push the new cover presence switch in until it is seated securely between the tabs.

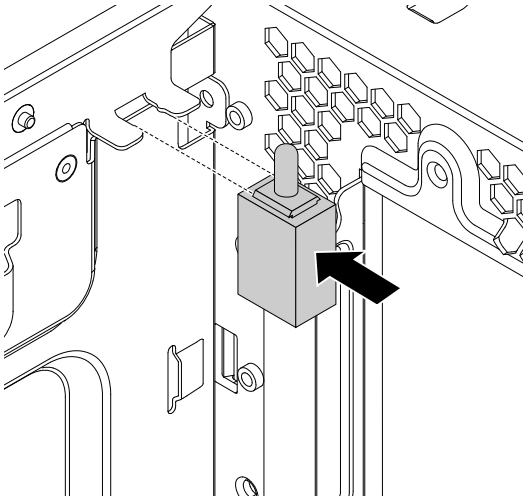

Figure 39. Installing the cover presence switch

9. Connect the cable of the new cover presence switch to the cover presence switch connector on the system board. See “Locating parts on the system board” on page 6.
10. Reinstall the optical drive bracket. See “Removing and reinstalling the optical drive bracket” on page 88.
11. Reinstall the direct cooling air baffle. See “Removing and reinstalling the direct cooling air baffle” on page 76.

What to do next:

- To work with another piece of hardware, go to the appropriate section.
- To complete the installation or replacement, go to “Completing the parts replacement” on page 149.

Replacing the front fan assembly

Attention: Do not open your computer or attempt any repair before reading and understanding the “Read this first: Important safety information” on page v.

Note: The front fan assembly is only available on some models.

To replace the front fan assembly, do the following:

1. Remove all media from the drives and turn off all attached devices and the computer. Then, disconnect all power cords from electrical outlets and disconnect all cables that are connected to the computer.
2. Remove the computer cover. See “Removing the computer cover” on page 75.
3. Pull the front fan assembly by the handle to slide it out of the computer chassis.

   Note: When you slide out the front fan assembly, avoid pulling the front fan assembly cable.

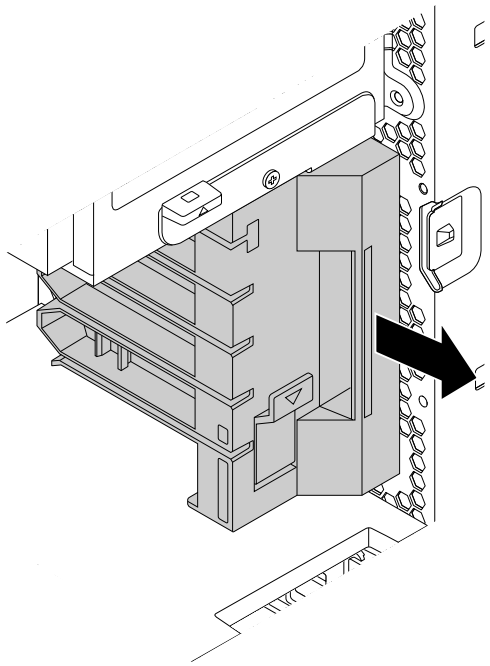

Figure 40. Removing the front fan assembly

4. Disconnect the front fan assembly cable from the front fan connector on the system board.
5. Connect the cable of the new front fan assembly to the front fan connector on the system board. See “Locating parts on the system board” on page 6.

6. Align the top and bottom edges of the new front fan assembly with the two slots in the computer chassis. Then, slide the new front fan assembly in until the it cannot be pushed in further.

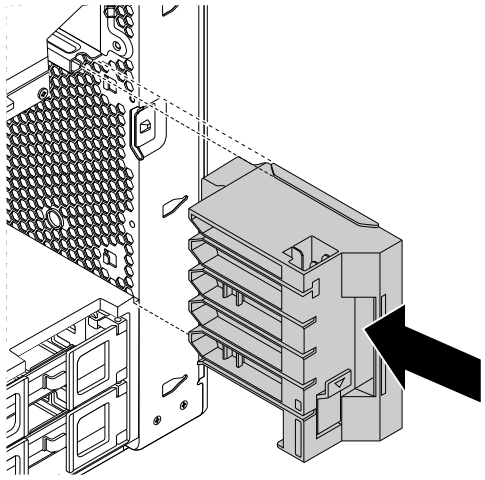

Figure 41. Installing the front fan assembly

What to do next:

- To work with another piece of hardware, go to the appropriate section.
- To complete the installation or replacement, go to "Completing the parts replacement" on page 149.

Installing or replacing an internal storage drive

Attention: Do not open your computer or attempt any repair before reading and understanding the "Read this first: Important safety information" on page v.

Depending on your computer model, your computer might come with one or more of the following types of internal storage drives:

- 3.5-inch hard disk drive
- 3.5-inch hybrid drive
- 2.5-inch hard disk drive
- 2.5-inch solid-state drive
- M.2 solid-state drive on a flex adapter
- PCI Express solid-state drive

To install or replace an internal storage drive, refer to the following:

- "Installing or replacing a 3.5-inch storage drive in the storage drive bay" on page 94
- "Installing or replacing a 2.5-inch storage drive in the storage drive bay" on page 103
- "Installing or replacing an M.2 solid-state drive on the flex adapter" on page 119
- "Installing or replacing a PCI card" on page 121

Installing or replacing a 3.5-inch storage drive

A 3.5-inch storage drive on your computer might be a 3.5-inch hard disk drive or a 3.5-inch hybrid drive.

To install or replace a 3.5-inch storage drive, refer to the following:

- “Installing or replacing a 3.5-inch storage drive in the storage drive bay” on page 94
- “Installing or replacing a 3.5-inch storage drive in the optical drive bay” on page 99

Installing or replacing a 3.5-inch storage drive in the storage drive bay

Depending on your computer model, one of the following types of storage drive bracket is used in the storage drive bay:

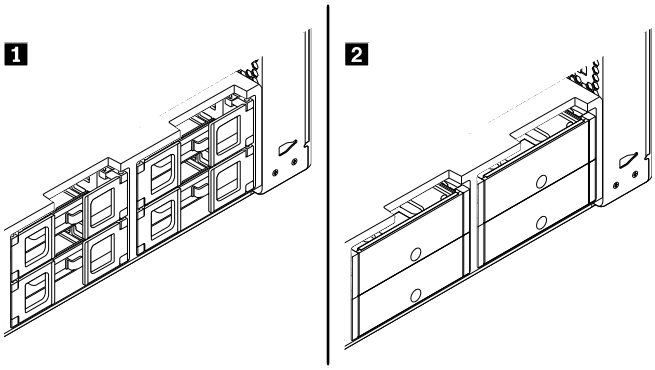

Figure 42. Two types of storage drive bracket

To install or replace a 3.5-inch storage drive in a type 1 bracket, do the following:

1. Remove all media from the drives and turn off all attached devices and the computer. Then, disconnect all power cords from electrical outlets and disconnect all cables that are connected to the computer.
2. Remove the computer cover. See “Removing the computer cover” on page 75.
3. Locate the storage drive bay. See “Locating internal drives” on page 10.
4. Depending on whether you are installing or replacing a 3.5-inch storage drive, do one of the following:
   - If you are installing a 3.5-inch storage drive, open the handles on both sides of the storage drive bracket, and pull out the empty bracket.
   - If you are replacing a 3.5-inch storage drive, open the handles on both sides of the storage drive bracket, disconnect the cables from the storage drive, and pull out the bracket with the storage drive.

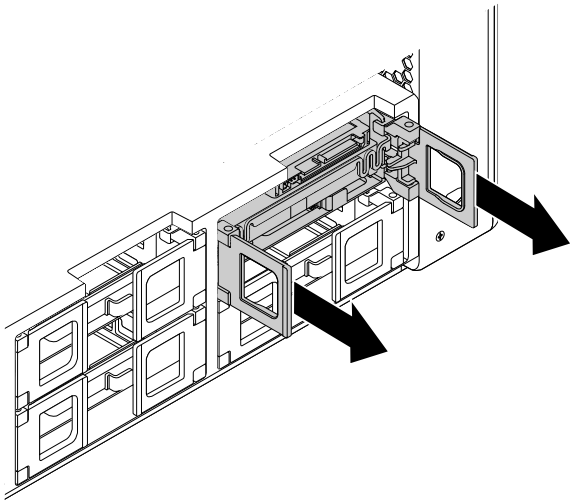

Figure 43. Removing the type **1** *storage drive bracket*

Then, flex the sides of the bracket to remove the storage drive from the bracket.

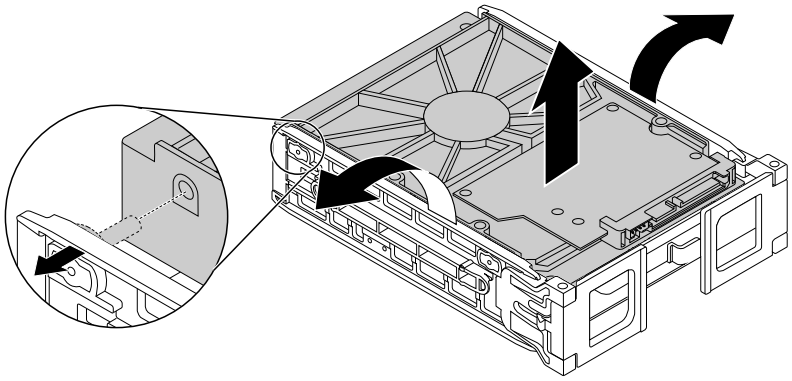

Figure 44. Removing the storage drive from the type **1** *bracket*

5. Flex the sides of the bracket and align pins 1 on the bracket with the corresponding holes in the new storage drive. Do not touch the circuit board 2 on the storage drive.

   Note: Ensure that the circuit board 2 faces upward and the connectors 3 face toward the front of the bracket.

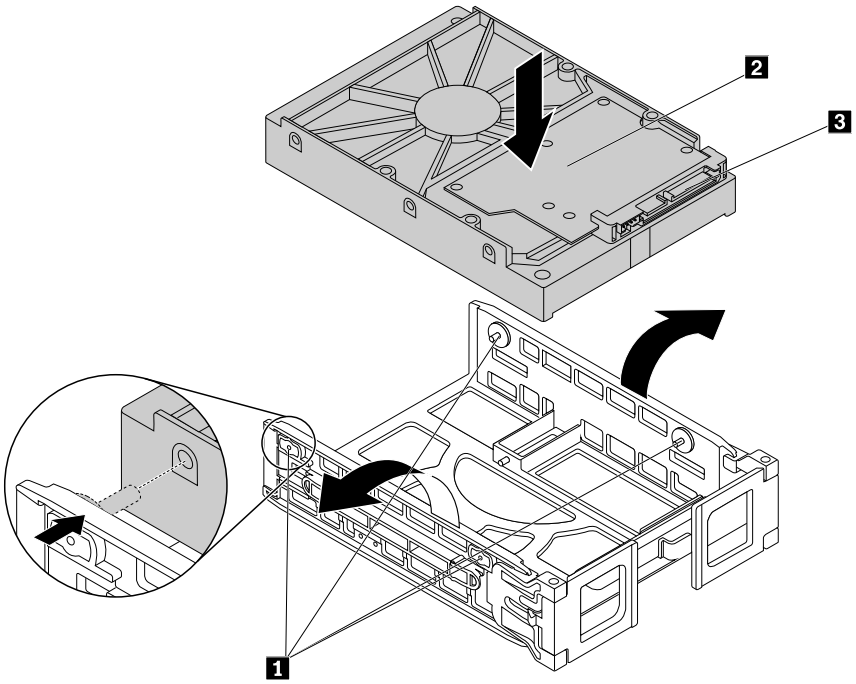

Figure 45. Installing the storage drive into the type 1 bracket

6. Slide the bracket with the new storage drive into the storage drive bay.

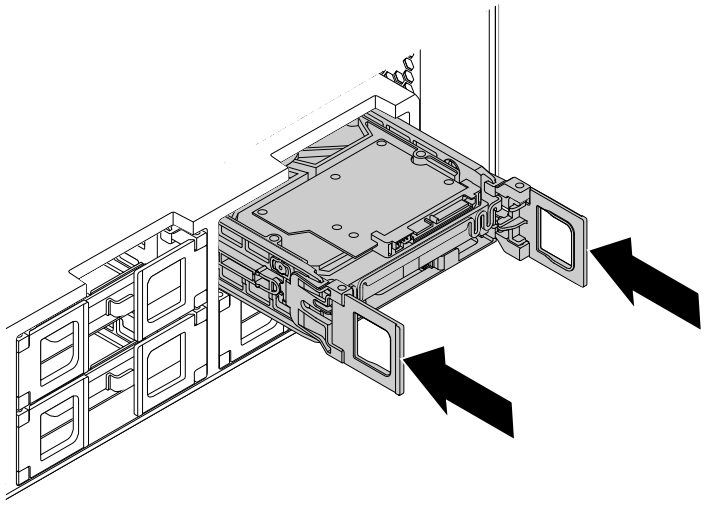

Figure 46. Installing the type 1 storage drive bracket

7. Connect the signal cable and the power cable to the new storage drive, and then close the handles on both sides of the bracket.

To install or replace a 3.5-inch storage drive in a type **2** bracket, do the following:

1. Remove all media from the drives and turn off all attached devices and the computer. Then, disconnect all power cords from electrical outlets and disconnect all cables that are connected to the computer.
2. Remove the computer cover. See “Removing the computer cover” on page 75.
3. Locate the storage drive bay. See “Locating internal drives” on page 10.
4. Press the pit on the bracket cover, and then grasp the tilted cover to pull the bracket out of the storage drive bay.

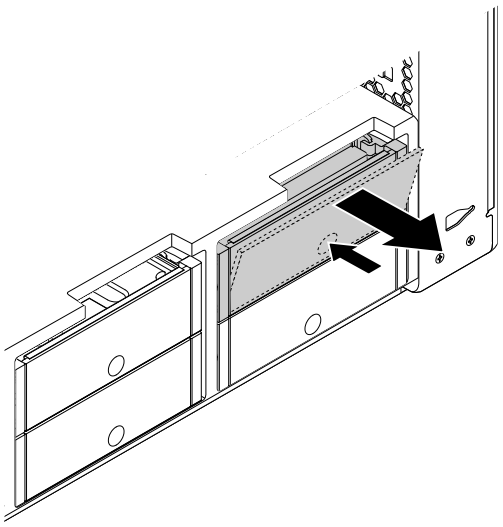

*Figure 47. Removing the type **2** storage drive bracket*

5. If you are replacing a storage drive, flex the sides of the bracket to remove the storage drive from the bracket.

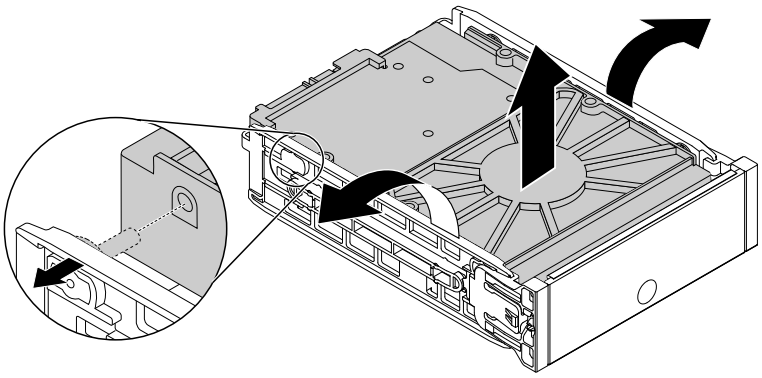

*Figure 48. Removing the storage drive from the type **2** bracket*

6. Flex the sides of the bracket and align pins 1 on the bracket with the corresponding holes in the new storage drive. Do not touch the circuit board 3 on the storage drive.

   Note: Ensure that the circuit board 3 faces upward and the connectors 2 face toward the rear of the bracket.

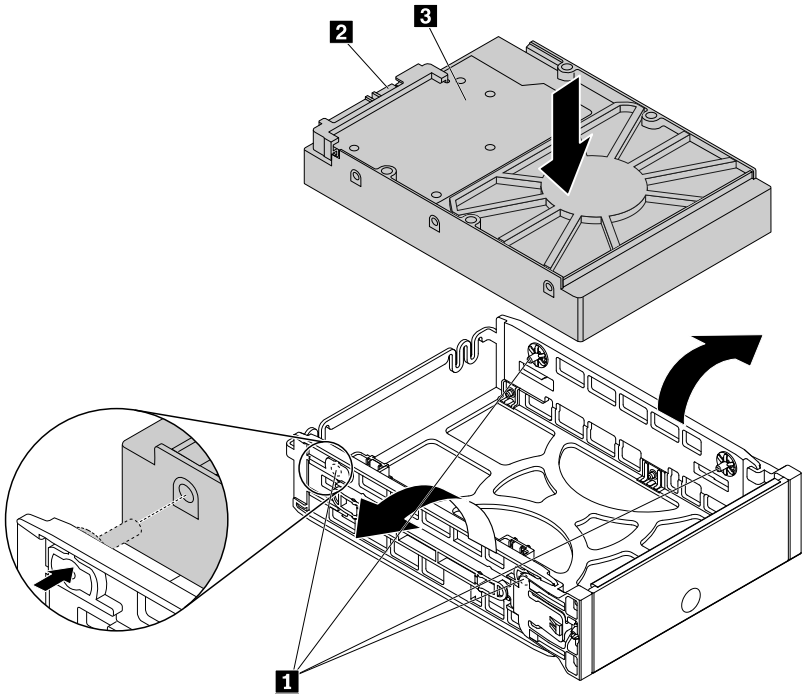

Figure 49. Installing the storage drive into the type 2 bracket

7. Slide the bracket with the new storage drive into the storage drive bay until it snaps into position.

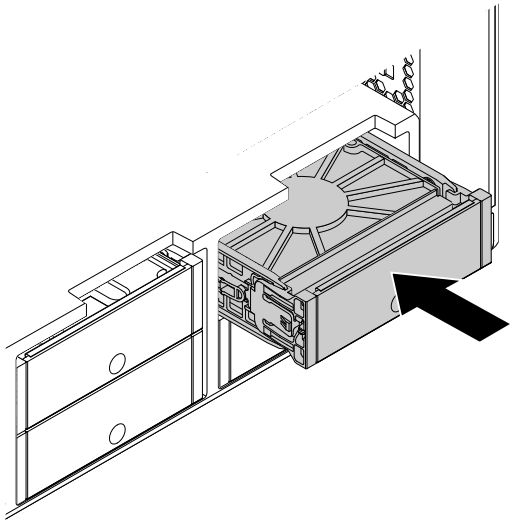

Figure 50. Installing the type 2 storage drive bracket

What to do next:

- To work with another piece of hardware, go to the appropriate section.
- To complete the installation or replacement, go to “Completing the parts replacement” on page 149.

Installing or replacing a 3.5-inch storage drive in the optical drive bay

To install or replace a 3.5-inch storage drive in the optical drive bay, do the following:

1. Remove all media from the drives and turn off all attached devices and the computer. Then, disconnect all power cords from electrical outlets and disconnect all cables that are connected to the computer.
2. Remove the computer cover. See “Removing the computer cover” on page 75.
3. Locate the optical drive bay in which you want to install or replace the storage drive. See “Locating internal drives” on page 10.
4. If your computer has a front-access storage enclosure installed, remove the front-access storage enclosure from the optical drive bay. See “Installing or replacing a device in the optical drive bay” on page 78.
5. Press the tab **1** on the rear of the front-access storage enclosure so that the front cover is opened.

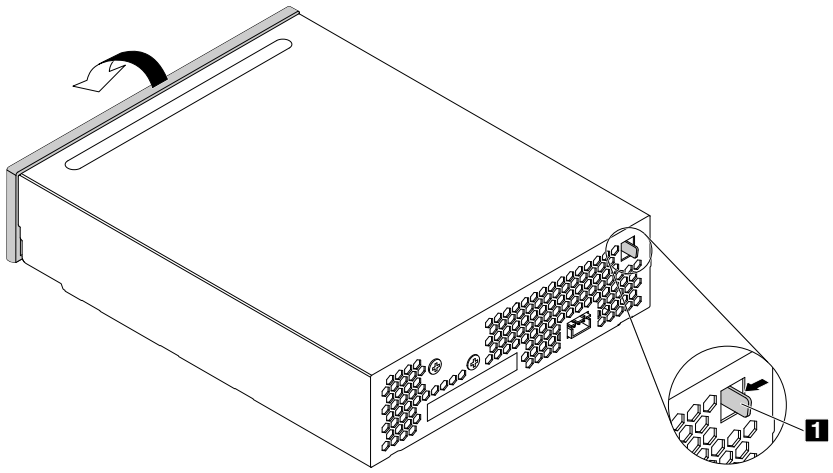

Figure 51. Opening the front cover of the front-access storage enclosure

6. Open the handles on both sides of the storage drive bracket and pull the bracket out of the front-access storage enclosure.

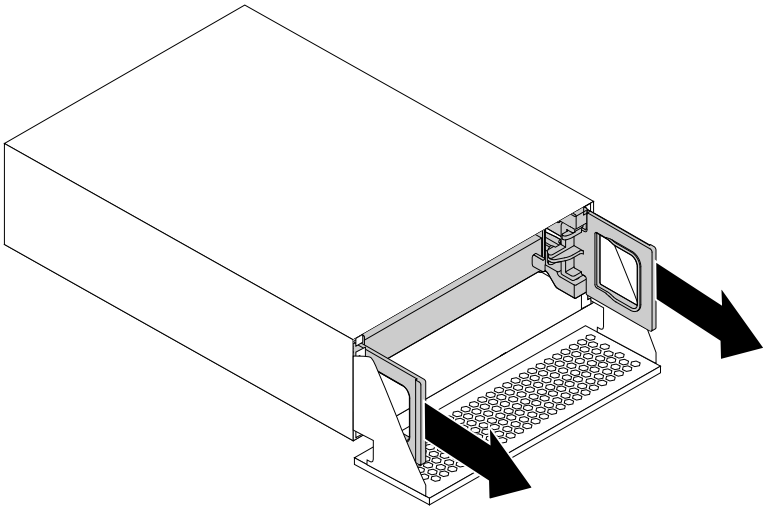

Figure 52. Removing the storage drive bracket

7. If you are replacing a storage drive, flex the sides of the bracket to remove the storage drive from the bracket.

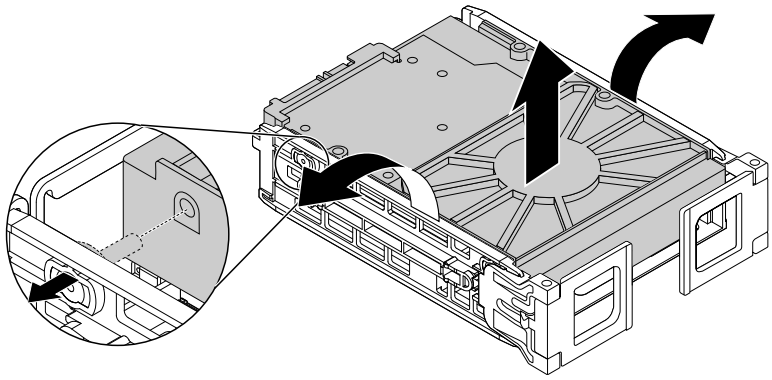

Figure 53. Removing the storage drive from the bracket

8. Flex the sides of the bracket and align pins 1 on the bracket with the corresponding holes in the new storage drive. Do not touch the circuit board 3 on the storage drive.

   Note: Ensure that the circuit board 3 faces upward and the connectors 2 face toward the rear of the bracket.

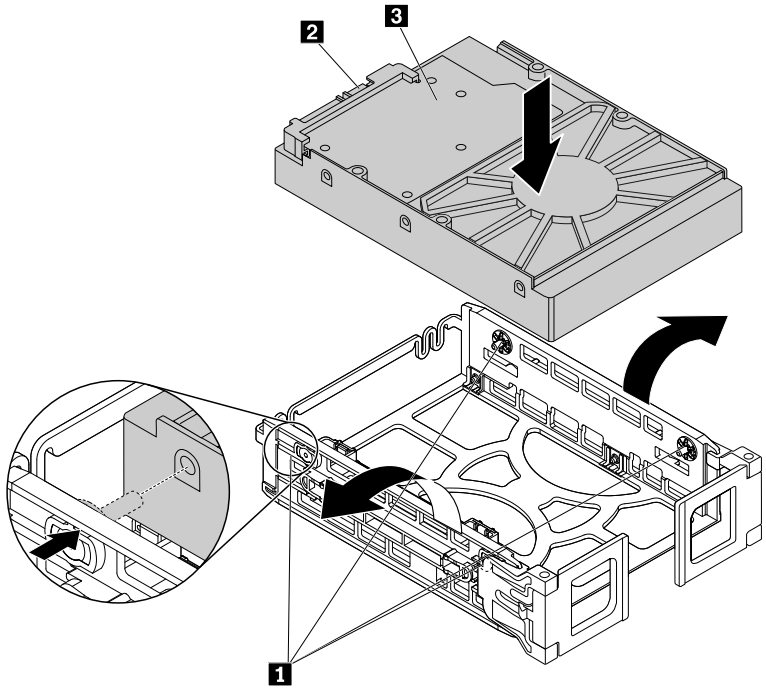

Figure 54. Installing the storage drive into the bracket

9. Install the bracket with the new storage drive into the front-access storage enclosure, and then close the handles on both sides of the bracket.

   Note: Ensure that the storage drive connectors are aligned with the corresponding connectors in the front-access storage enclosure.

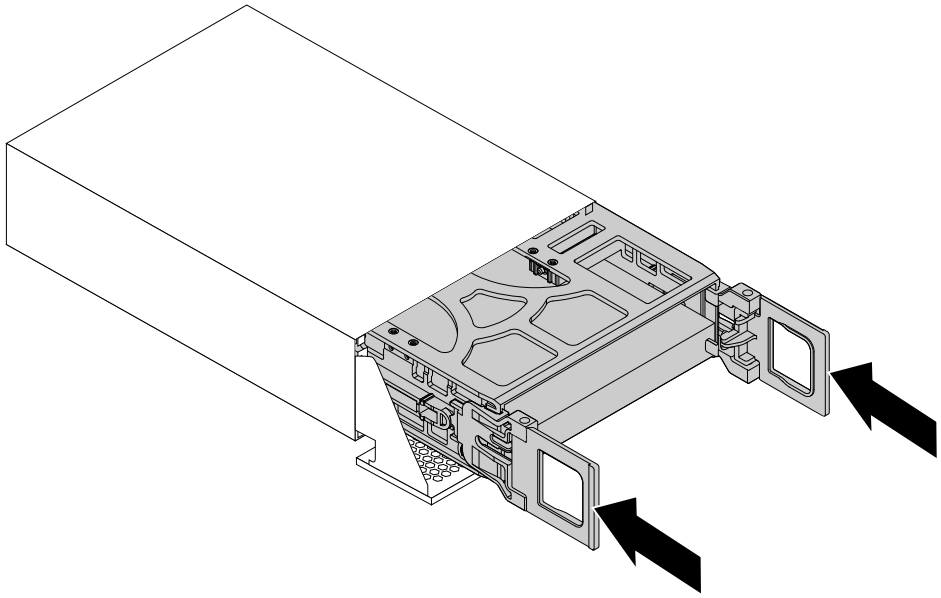

Figure 55. Installing the storage drive bracket

10. Pivot the front cover of the front-access storage enclosure until it snaps into position.

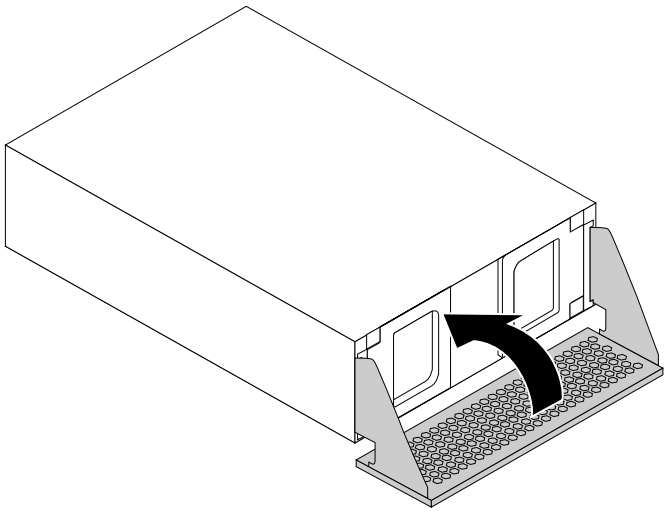

Figure 56. Closing the front cover of the front-access storage enclosure

11. Install the front-access storage enclosure into the optical drive bay. See “Installing or replacing a device in the optical drive bay” on page 78.
12. Connect the signal cable, the power cable, and the front-access storage enclosure control cable to the front-access storage enclosure.

What to do next:

- To work with another piece of hardware, go to the appropriate section.
- To complete the installation or replacement, go to “Completing the parts replacement” on page 149.

Installing or replacing a 2.5-inch storage drive

A 2.5-inch storage drive on your computer might be a 2.5-inch hard disk drive or a 2.5-inch solid-state drive.

To install or replace a .2.5-inch storage drive, refer to the following:

- “Installing or replacing a 2.5-inch storage drive in the storage drive bay” on page 103
- “Installing or replacing a 2.5-inch storage drive with a converter in the storage drive bay” on page 108
- “Installing or replacing a 2.5-inch storage drive in the optical drive bay” on page 115

Installing or replacing a 2.5-inch storage drive in the storage drive bay

Depending on your computer model, one of the following types of storage drive bracket is used in the storage drive bay:

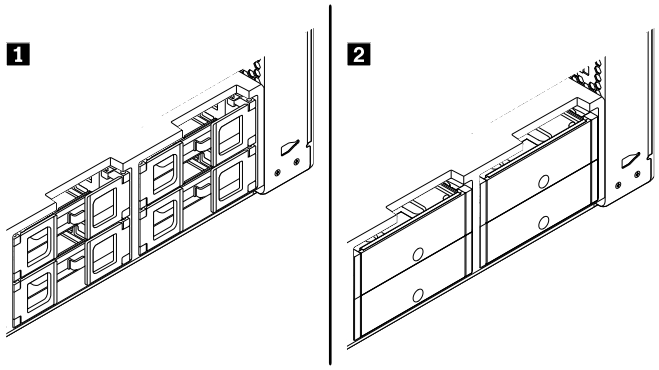

Figure 57. Two types of storage drive bracket

Note: This section illustrates only installing or replacing a 2.5-inch solid-state drive.

To install or replace a 2.5-inch storage drive in a type 1 bracket, do the following:

1. Remove all media from the drives and turn off all attached devices and the computer. Then, disconnect all power cords from electrical outlets and disconnect all cables that are connected to the computer.
2. Remove the computer cover. See “Removing the computer cover” on page 75.
3. Locate the storage drive bay in which you want to install or replace a storage drive. See “Locating internal drives” on page 10.
4. Depending on whether you are installing or replacing a 2.5-inch storage drive, do one of the following:
   - If you are installing a 2.5-inch storage drive, open the handles on both sides of the storage drive bracket, and pull out the empty bracket.

- If you are replacing a 2.5-inch storage drive, open the handles on both sides of the storage drive bracket, disconnect the cables from the storage drive, and pull out the bracket with the storage drive.

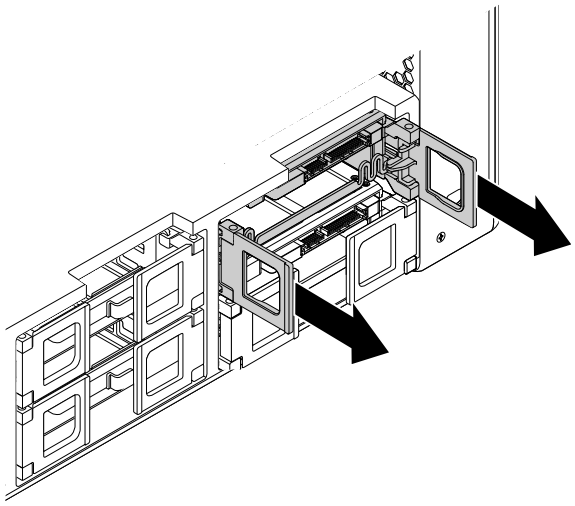

Figure 58. Removing the type 1 storage drive bracket

Then, flex the sides of the bracket to remove the 2.5-inch storage drive from the bracket.

Note: If a 3.5-inch storage drive also is installed in the bracket, remove the 3.5-inch storage drive first.

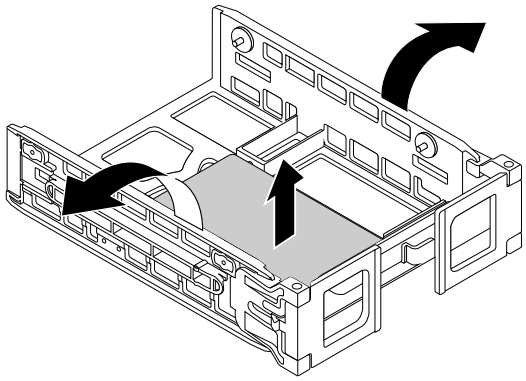

Figure 59. Removing the storage drive from the type 1 bracket

5. Flex the sides of the bracket and align pins 1 on the bracket with the corresponding holes in the new storage drive.

   Note: If you are installing a 2.5-inch hard disk drive, ensure that the circuit board faces downward and the connectors 2 face toward the front of the bracket.

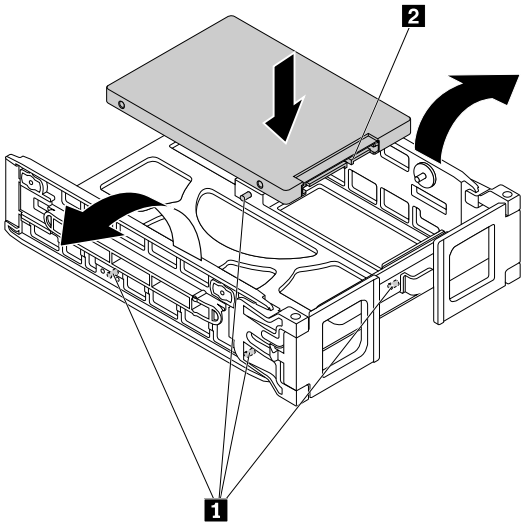

Figure 60. Installing the storage drive into the type 1 bracket

6. Slide the bracket with the new storage drive into the storage drive bay.

   Note: Ensure that the storage drive is on the upper side. You might need to flip over the storage drive bracket.

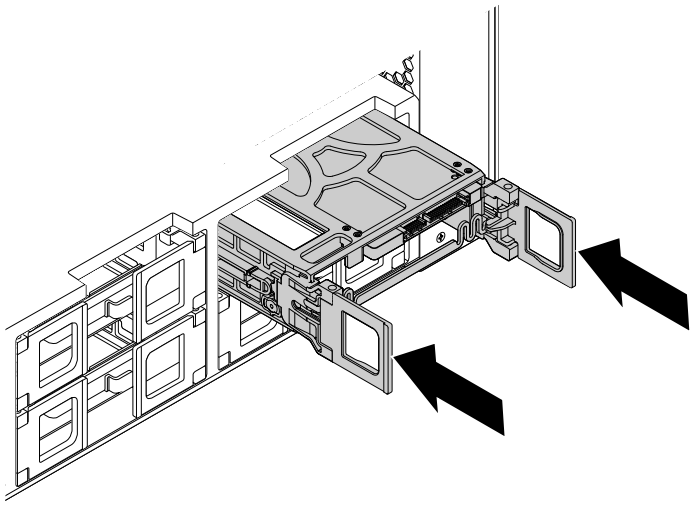

Figure 61. Installing the type 1 storage drive bracket

7. Connect the signal cable and the power cable to the new storage drive, and then close the handles on both sides of the bracket.

To install or replace a 2.5-inch storage drive in a type 2 bracket, do the following:

1. Turn off the computer and disconnect all power cords from electrical outlets.
2. Remove the computer cover. See “Removing the computer cover” on page 75.
3. Locate the storage drive bay. See “Locating internal drives” on page 10.
4. Press the pit on the bracket cover, and then grasp the tilted cover to pull the bracket out of the storage drive bay.

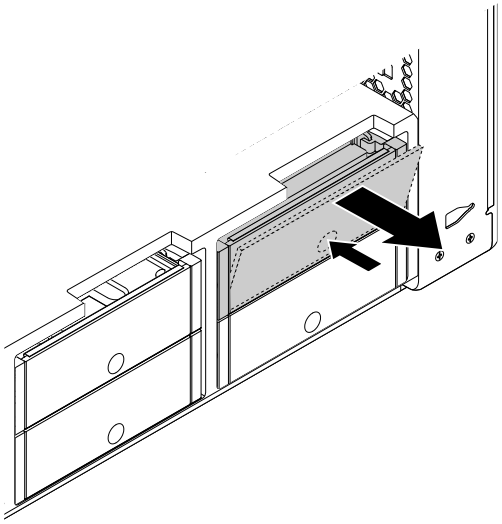

Figure 62. Removing the type 2 storage drive bracket

5. If you are replacing a storage drive, flex the sides of the bracket to remove the storage drive from the bracket.

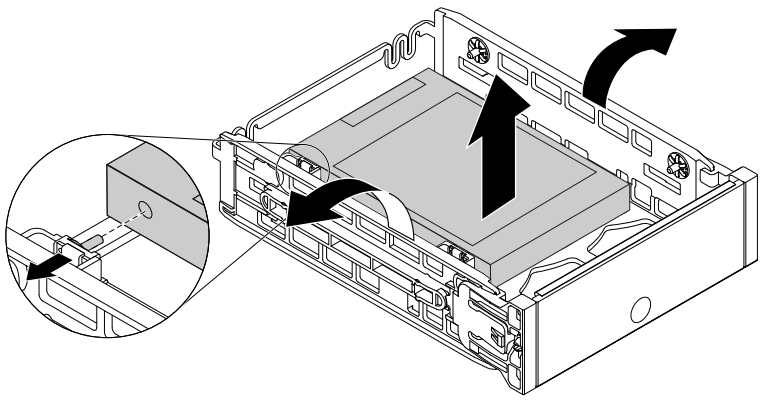

Figure 63. Removing the storage drive from the type 2 bracket

6. Flex the sides of the bracket and align pins **1** on the bracket with the corresponding holes in the new storage drive.

   Note: If you are installing a 2.5-inch hard disk drive, ensure that the circuit board faces downward and the connectors **2** face toward the rear of the bracket.

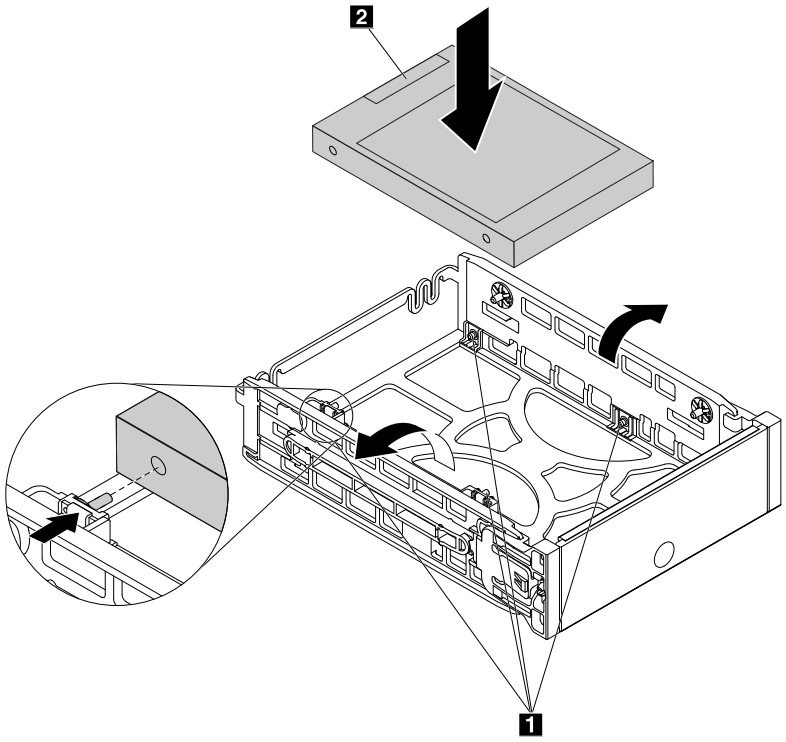

*Figure 64. Installing the storage drive into the type **2** bracket*

7. Slide the bracket with the new storage drive into the storage drive bay until it snaps into position.

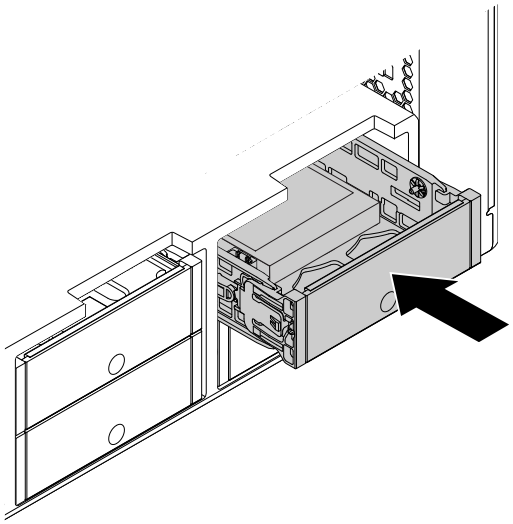

*Figure 65. Installing the type **2** storage drive bracket*

What to do next:

- To work with another piece of hardware, go to the appropriate section.
- To complete the installation or replacement, go to “Completing the parts replacement” on page 149.

Installing or replacing a 2.5-inch storage drive with a converter in the storage drive bay

Depending on your computer model, one of the following types of storage drive bracket is used in the storage drive bay:

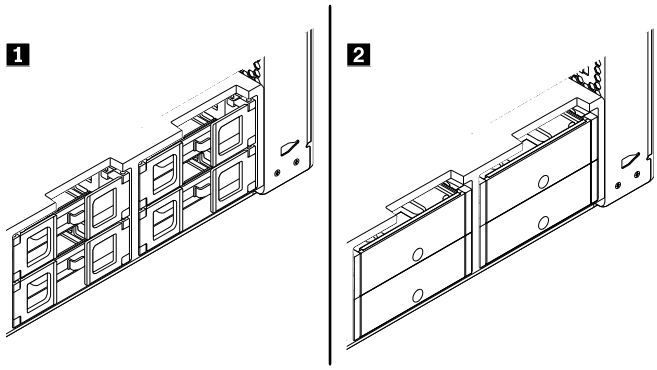

Figure 66. Two types of storage drive bracket

Note: This section illustrates only installing or replacing a 2.5-inch solid-state drive with a converter.

To install or replace a 2.5-inch storage drive with a converter in a type 1 bracket, do the following:

1. Remove all media from the drives and turn off all attached devices and the computer. Then, disconnect all power cords from electrical outlets and disconnect all cables that are connected to the computer.
2. Remove the computer cover. See “Removing the computer cover” on page 75.
3. Locate the storage drive bay in which you want to install or replace a storage drive. See “Locating internal drives” on page 10.
4. Depending on whether you are installing or replacing a 2.5-inch storage drive with a converter, do one of the following:
   - If you are installing a 2.5-inch storage drive with a converter, open the handles on both sides of the storage drive bracket, and pull out the empty bracket.
   - If you are replacing a 2.5-inch storage drive with a converter, open the handles on both sides of the storage drive bracket, disconnect the cables from the converter, and pull out the bracket.

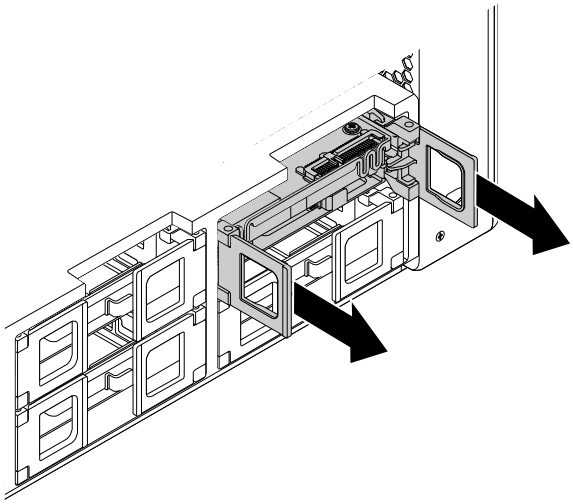

Figure 67. Removing the type 1 storage drive bracket

Then, flex the sides of the bracket to remove the converter from the bracket.

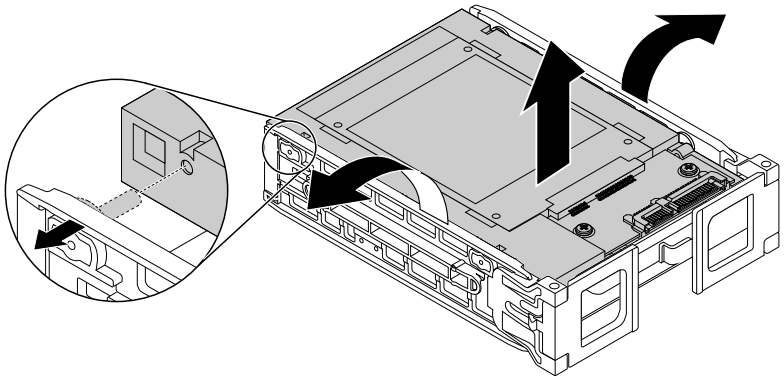

Figure 68. Removing the converter from the type 1 bracket

5. Lift up the tab **1** of the metal bracket and push the tab as shown to slide the bracket and remove it from the plastic frame.

   Note: If you are replacing a storage drive, push the tab harder to disconnect the storage drive from the plastic frame.

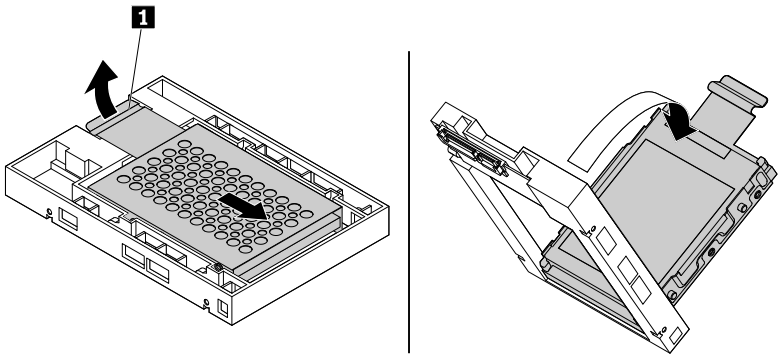

Figure 69. Removing the metal bracket from the plastic frame of the converter

6. If you are replacing a storage drive with a converter, carefully flex the sides of the metal bracket to remove the storage drive from the bracket.

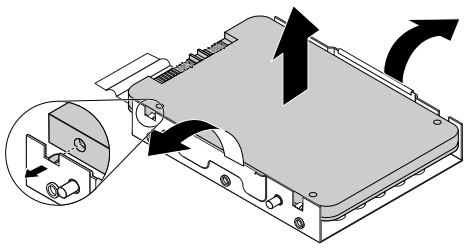

Figure 70. Removing the storage drive from the metal bracket of the converter

7. Carefully flex the sides of the metal bracket and align the four tabs **1** on the metal bracket with the corresponding holes in the new storage drive.

   Note: Ensure that the connectors of the storage drive face toward the tab of the metal bracket.

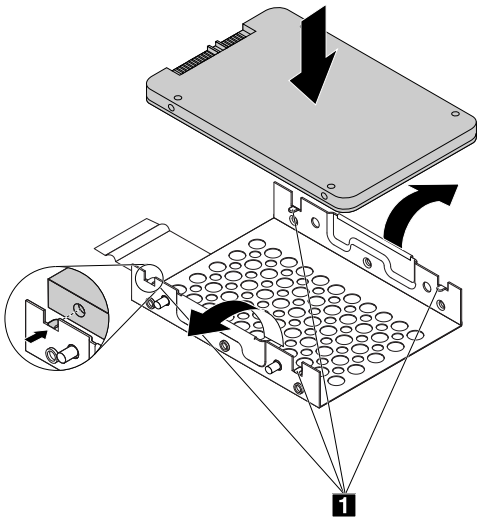

Figure 71. Installing the storage drive into the metal bracket of the converter

8. Insert the four posts **1** on the metal bracket into the corresponding slots in the plastic frame as shown.

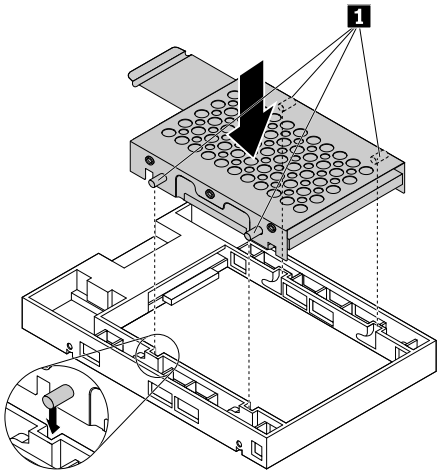

Figure 72. Inserting the metal bracket into the plastic frame of the converter

9. Push the metal bracket down until the tab **1** is slightly curved, and then push the bracket with the storage drive forward as shown until the tab **1** snaps into position.

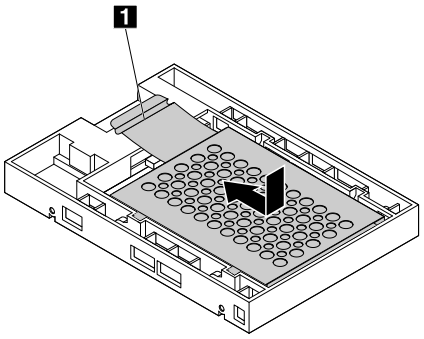

Figure 73. Installing the metal bracket into the plastic frame of the converter

10. Flex the sides of the storage drive bracket and align the four pins **1** on the bracket with the corresponding holes in the converter.

    Note: Ensure that the circuit board faces upward and the connectors **2** face toward the front of the bracket.

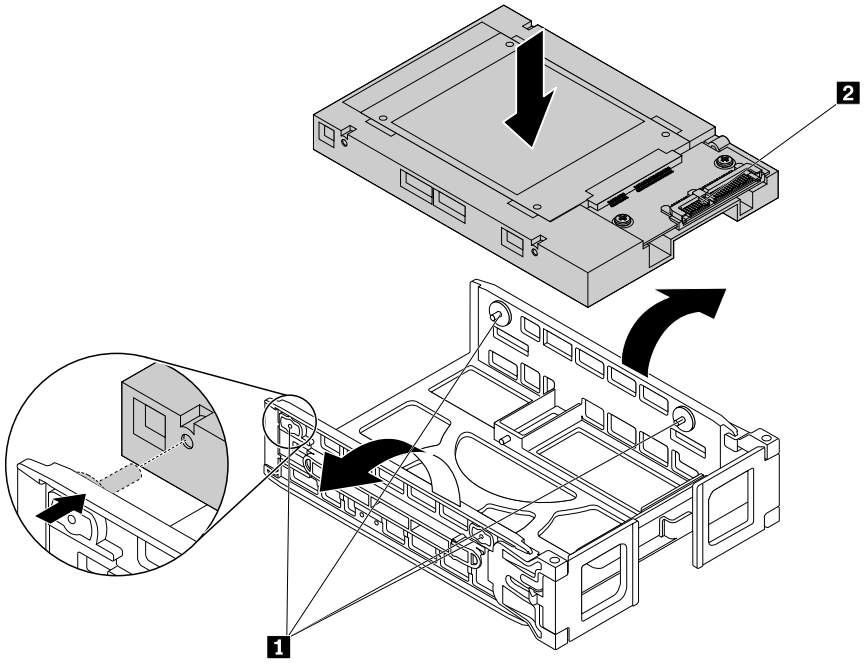

*Figure 74. Installing the converter into the type **1** bracket*

11. Slide the storage drive bracket with the converter into the storage drive bay.

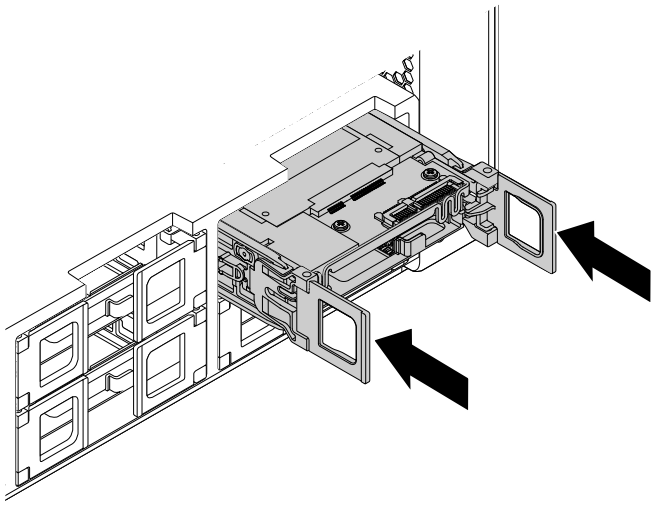

Figure 75. Installing the type 1 storage drive bracket

12. Connect the signal cable and the power cable to the converter, and then close the handles on both sides of the storage drive bracket.

To install or replace a 2.5-inch storage drive with a converter in a type 2 bracket, do the following:

1. Turn off the computer and disconnect all power cords from electrical outlets.
2. Remove the computer cover. See “Removing the computer cover” on page 75.
3. Locate the storage drive bay in which you want to install or replace a storage drive. See “Locating internal drives” on page 10.
4. Press the pit on the bracket cover, and then grasp the tilted cover to pull the bracket out of the storage drive bay.

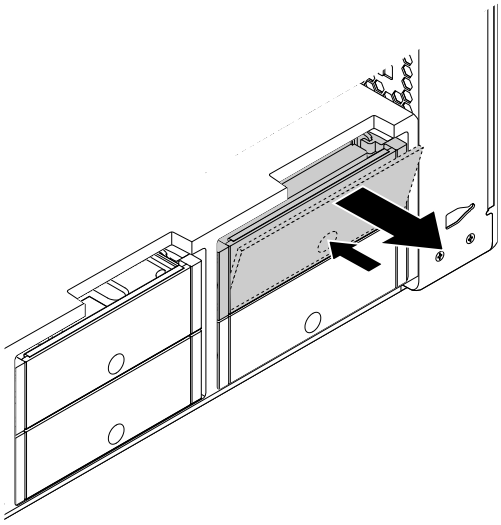

Figure 76. Removing the type 2 storage drive bracket

5. If you are replacing a storage drive with a converter, flex the sides of the bracket to remove the converter from the bracket.

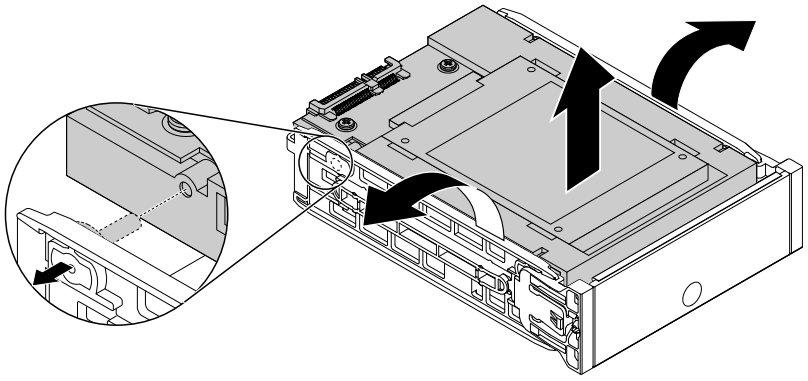

Figure 77. Removing the converter from the type 2 bracket

Remove the storage drive from the converter. See Figure 69 “Removing the metal bracket from the plastic frame of the converter” on page 110.

6. Install the new storage drive into the converter. See Figure 71 “Installing the storage drive into the metal bracket of the converter” on page 111.
7. Flex the sides of the bracket and align pins 1 on the bracket with the corresponding holes in the converter.

   Note: Ensure that the circuit board face upward and the connectors 2 face toward the rear of the bracket.

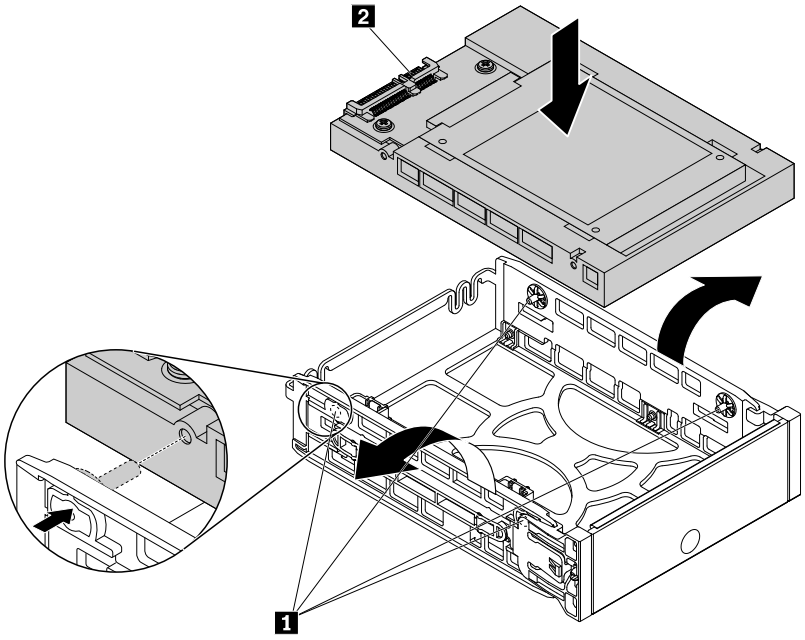

Figure 78. Installing the converter into the type 2 bracket

8. Slide the storage drive bracket with the converter into the storage drive bay until it snaps into position.

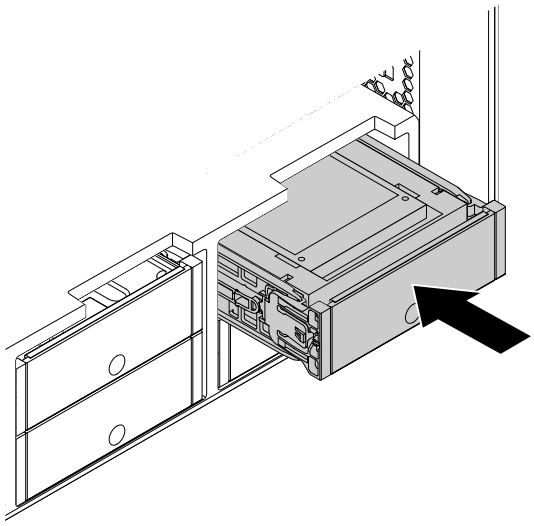

Figure 79. Installing the type **2** *storage drive bracket*

What to do next:

- To work with another piece of hardware, go to the appropriate section.
- To complete the installation or replacement, go to "Completing the parts replacement" on page 149.

Installing or replacing a 2.5-inch storage drive in the optical drive bay

Note: This section illustrates only installing or replacing a 2.5-inch solid-state drive.

To install or replace a 2.5-inch storage drive in the optical drive bay, do the following:

1. Remove all media from the drives and turn off all attached devices and the computer. Then, disconnect all power cords from electrical outlets and disconnect all cables that are connected to the computer.
2. Remove the computer cover. See "Removing the computer cover" on page 75.
3. Locate the optical drive bay in which you want to install or replace the storage drive. See "Locating internal drives" on page 10.
4. If your computer has a front-access storage enclosure installed, remove the front-access storage enclosure from the optical drive bay. See "Installing or replacing a device in the optical drive bay" on page 78.

5. Press the tab 1 on the rear of the front-access storage enclosure so that the front cover is opened.

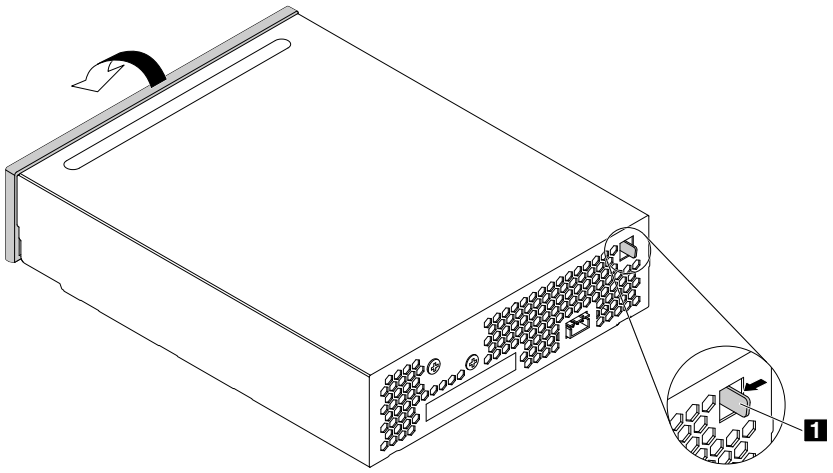

Figure 80. Opening the front cover of the front-access storage enclosure

6. Open the handles on both sides of the storage drive bracket and pull the bracket out of the front-access storage enclosure.

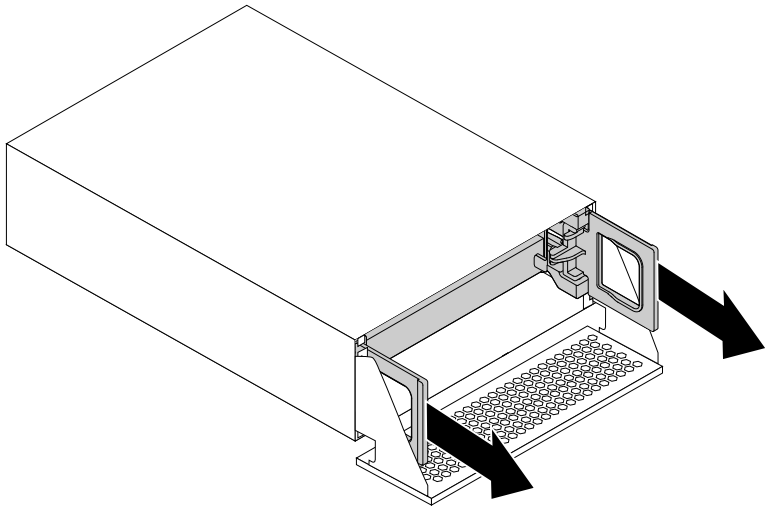

Figure 81. Removing the storage drive bracket

7. If you are replacing a storage drive, flex the sides of the bracket to remove the storage drive from the bracket.

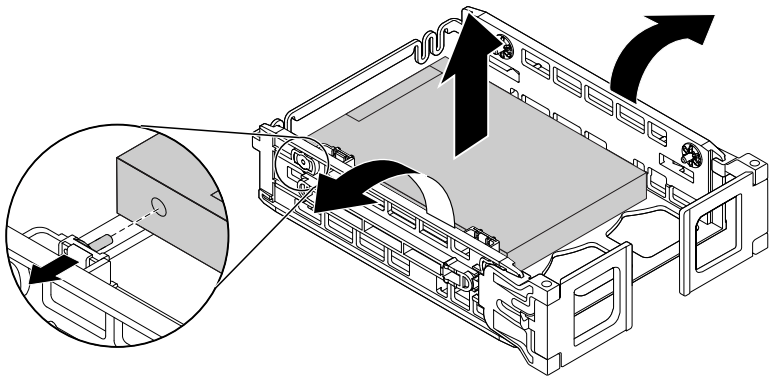

Figure 82. Removing the storage drive from the bracket

8. Flex the sides of the bracket and align pins **1** on the bracket with the corresponding holes in the new storage drive.

   Note: Ensure that the connectors **2** face toward the rear of the bracket. If you are installing a 2.5-inch hard disk drive, ensure that the circuit board faces downward.

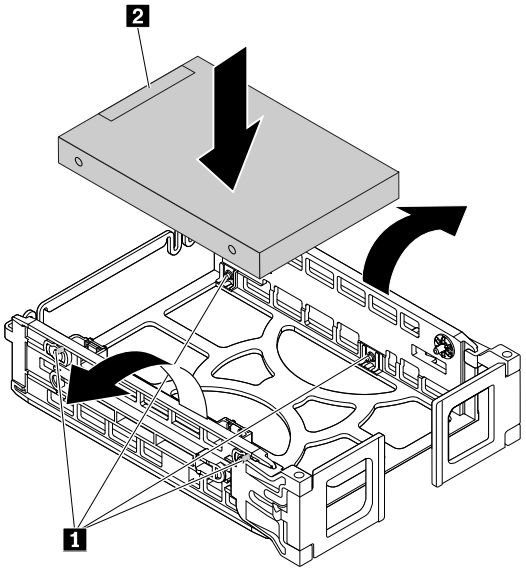

Figure 83. Installing the storage drive into the bracket

9. Install the bracket with the new storage drive into the front-access storage enclosure, and then close the handles on both sides of the bracket.

   Note: Ensure that the storage drive connectors are aligned with the corresponding connectors in the front-access storage enclosure.

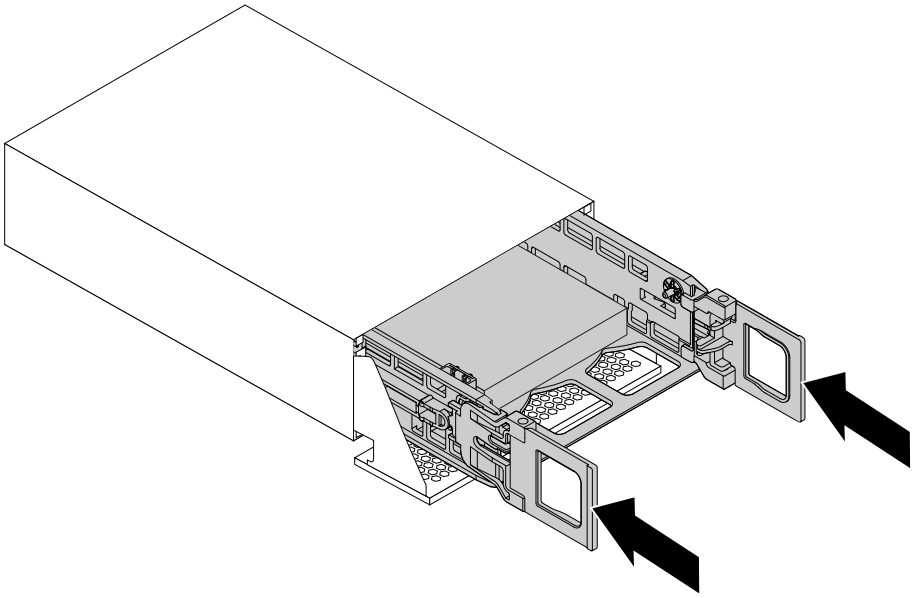

Figure 84. Installing the storage drive bracket

10. Pivot the front cover of the front-access storage enclosure until it snaps into position.

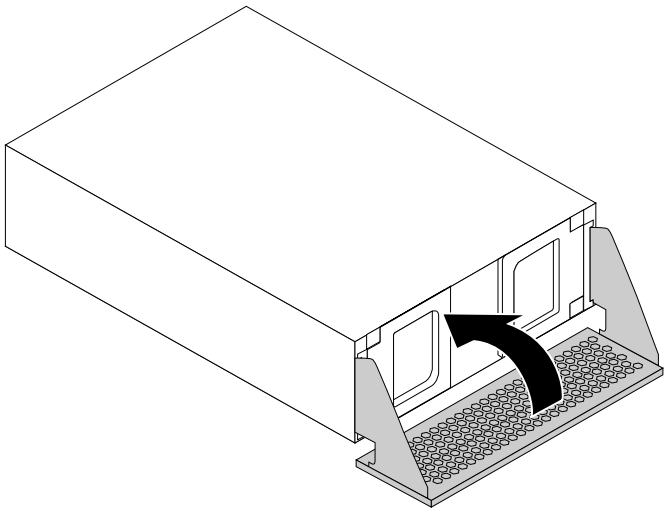

Figure 85. Closing the front cover of the front-access storage enclosure

11. Install the front-access storage enclosure into the optical drive bay. See “Installing or replacing a device in the optical drive bay” on page 78.
12. Connect the signal cable, the power cable, and the front cover control cable to the front-access storage enclosure.

What to do next:

- To work with another piece of hardware, go to the appropriate section.
- To complete the installation or replacement, go to “Completing the parts replacement” on page 149.

Installing or replacing an M.2 solid-state drive on the flex adapter

To install or replace an M.2 solid-state drive on the flex adapter, do the following:

1. Remove all media from the drives and turn off all attached devices and the computer. Then, disconnect all power cords from electrical outlets and disconnect all cables that are connected to the computer.
2. Remove the computer cover. See “Removing the computer cover” on page 75.
3. Lay the computer on its side for easier access to the flex adapter.
4. Locate and remove the flex adapter with M.2 slots from the system board. See “Installing or replacing a flex adapter” on page 137.
5. Depending on whether you are installing or replacing an M.2 solid-state drive, do one of the following:
   - If you are replacing an M.2 solid-state drive, remove the screw that secures the M.2 solid-state drive. Then, gently pull the solid-state drive out of the M.2 slot on the flex adapter.

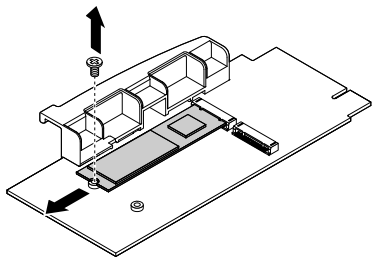

Figure 86. Removing the M.2 solid-state drive

   - If you are installing an M.2 solid-state drive, remove the screw corresponding to the M.2 slot where you want to install the new M.2 solid-state drive.
6. Install the new M.2 solid-state drive into the M.2 slot until the notch **1** is aligned with the corresponding screw hole in the flex adapter. Then, install the screw to secure the new solid-state drive.

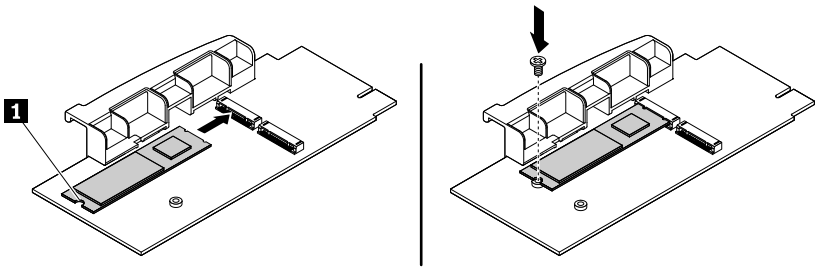

Figure 87. Installing the M.2 solid-state drive

7. Install the flex adapter with the new M.2 solid-state drive into the flex adapter slot on the system board. See “Installing or replacing a flex adapter” on page 137.

What to do next:

- To work with another piece of hardware, go to the appropriate section.
- To complete the installation or replacement, go to “Completing the parts replacement” on page 149.

Replacing the power supply assembly

Attention: Do not open your computer or attempt any repair before reading and understanding the “Read this first: Important safety information” on page v.

Although there are no moving parts in your computer after the power cord has been disconnected, the following warnings are required for your safety and proper Underwriters Laboratories (UL) certification.

CAUTION:

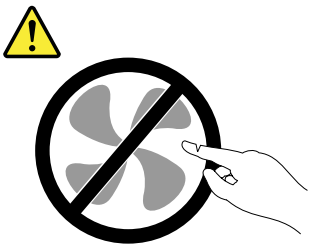

Hazardous moving parts. Keep fingers and other body parts away.

CAUTION:
Never remove the cover on a power supply or any part that has the following label attached.

Hazardous voltage, current, and energy levels are present inside any component that has this label attached. There are no serviceable parts inside these components. If you suspect a problem with one of these parts, contact a service technician.

To replace the power supply assembly, do the following:

1. Remove all media from the drives and turn off all attached devices and the computer. Then, disconnect all power cords from electrical outlets and disconnect all cables that are connected to the computer.
2. Remove the computer cover. See “Removing the computer cover” on page 75.

3. Pull the handle on the power supply assembly and pivot it downward as shown. Then, pull the entire power supply assembly out of the chassis.

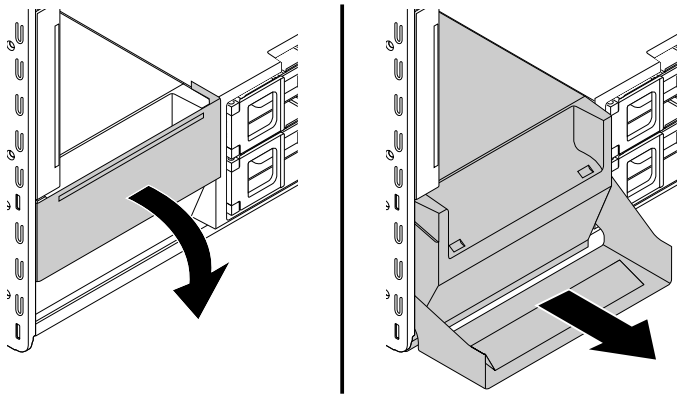

Figure 88. Removing the power supply assembly

4. Ensure that the new power supply assembly is the correct replacement.
5. Insert the new power supply assembly with the handle open into the chassis. Then, pivot the handle as shown to fully install the new power supply assembly into position.

   Note: You might need to push hard to close the handle if you feel resistance when you pivot the handle to the closed position.

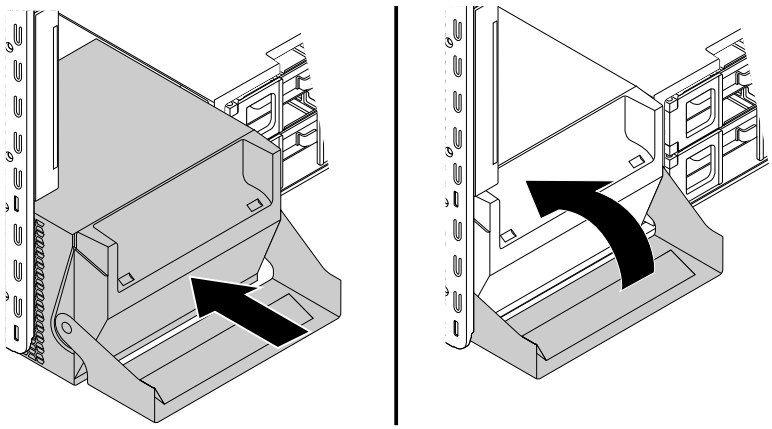

Figure 89. Installing the power supply assembly

What to do next:

- To work with another piece of hardware, go to the appropriate section.
- To complete the installation or replacement, go to “Completing the parts replacement” on page 149.

Installing or replacing a PCI card

Attention: Do not open your computer or attempt any repair before reading and understanding the “Read this first: Important safety information” on page v.

Depending on your computer model, your computer comes with one of the following combinations:

- **ThinkStation P500:** One standard PCI card slot, one PCI Express x1 card slot, two PCI Express x4 card slots, and two PCI Express x16 graphics card slots.
- **ThinkStation P700:** One standard PCI card slot, one PCI Express x4 card slot, one PCI Express x8 card slot, and three PCI Express x16 graphics card slots.

Install PCI Express cards according to the corresponding slot types and the following illustrated installation order:

- **For ThinkStation P500:**

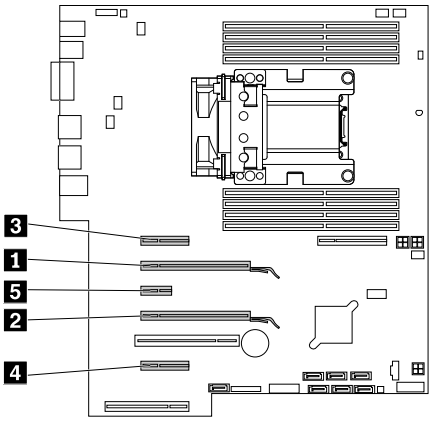

Figure 90. PCI Express card installation order for ThinkStation P500

- **For ThinkStation P700:**

  Note: If your computer has only one microprocessor installed, only some PCI Express card slots are usable.

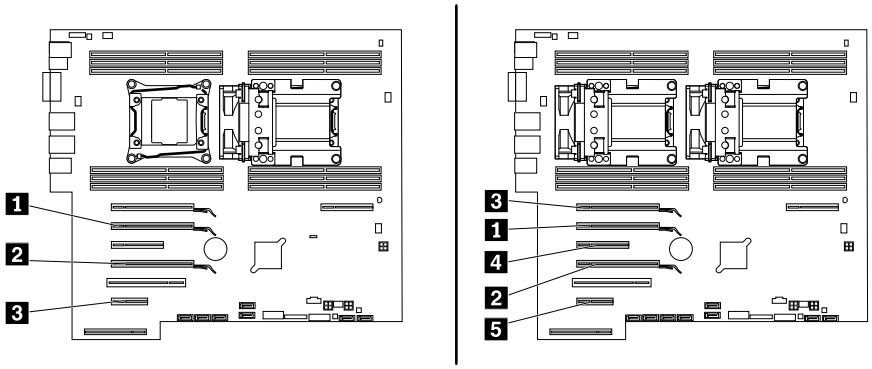

Figure 91. PCI Express card installation order for ThinkStation P700

If your computer comes with a full-length PCI card, refer to “Installing or replacing a full-length PCI card” on page 126 for its replacement instructions.

To install or replace a PCI card, do the following:

1. Remove all media from the drives and turn off all attached devices and the computer. Then, disconnect all power cords from electrical outlets and disconnect all cables that are connected to the computer.

2. Remove the computer cover. See “Removing the computer cover” on page 75.
3. Lay the computer on its side for easier access to the system board.
4. If you are replacing a PCI card with a PCI card retainer installed, remove the retainer first.
   a. Pull and pivot the tab on the front fan assembly as shown to open the latch inside.

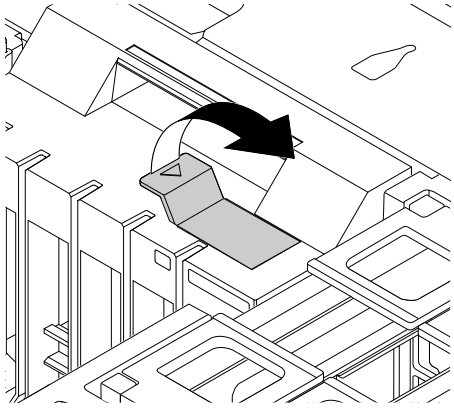

Figure 92. Opening the latch in the front fan assembly

   b. Gently pull the PCI card retainer out of the slot in the front fan assembly and then remove the card retainer from the PCI card latch.

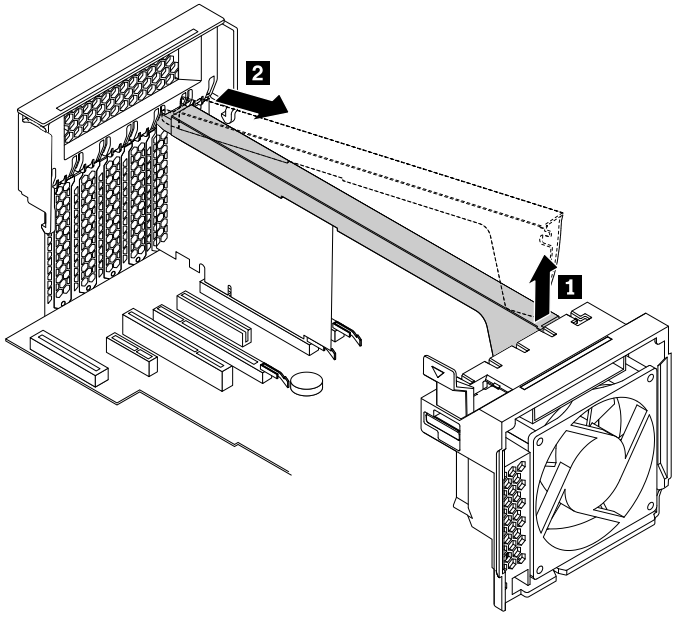

Figure 93. Removing the PCI card retainer

5. At the rear of the computer, lift up the plastic PCI card latch and pivot it to the left to rest it on the edge of the rear panel.

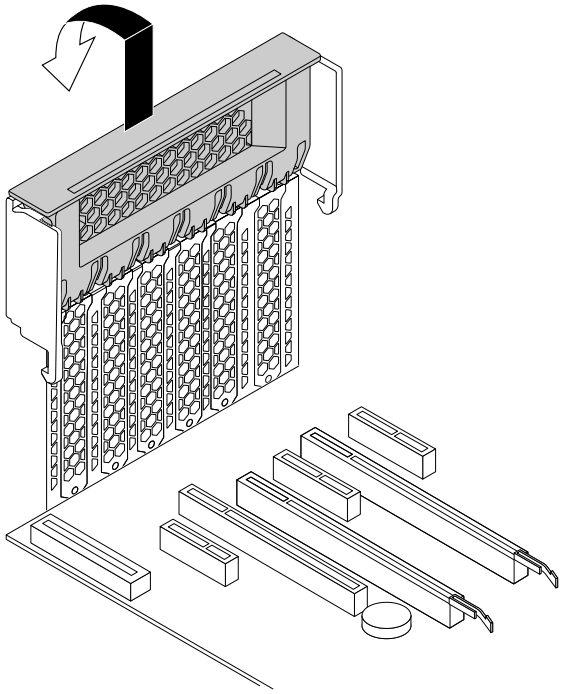

Figure 94. Opening the PCI card latch

6. Depending on whether you are installing or replacing a PCI card, do one of the following:
   - If you are installing a PCI card, remove the appropriate metal slot cover.

- If you are replacing an old PCI card, grasp the old card that is currently installed and gently pull it out of the slot.

  Notes:

  – If the PCI card is connected to another device, disconnect the cable from the card first.

  – The card fits tightly into the card slot. If necessary, alternate moving each side of the card a small amount until it is removed from the card slot.

  – If the card is held in place by a retaining latch, press the card retaining latch **1** as shown to disengage the latch. Grasp the card and gently pull it out of the slot.

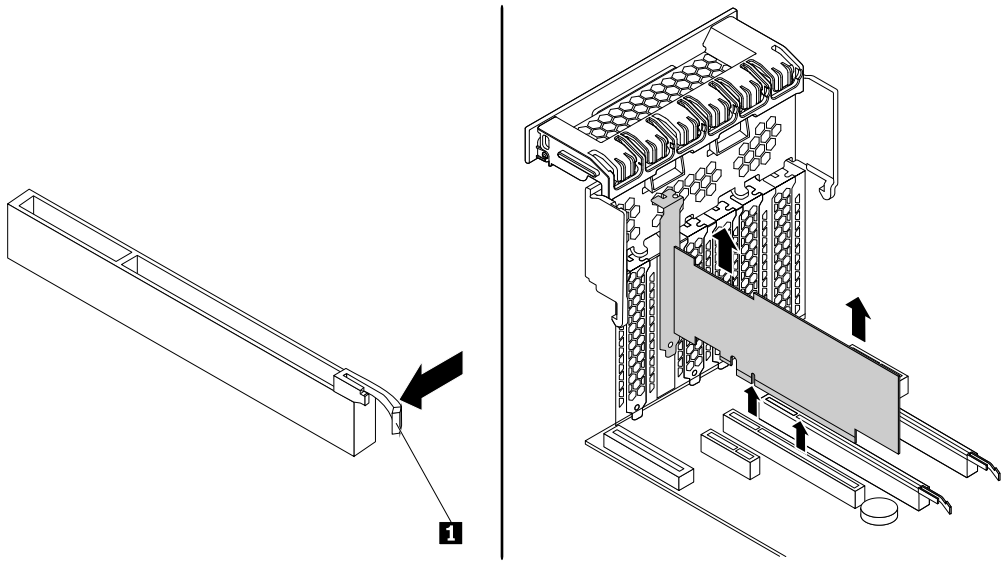

Figure 95. Removing a PCI card

7. Remove the new PCI card from its static-protective package.
8. Install the new card into the appropriate slot on the system board. See “Locating parts on the system board” on page 6.

   Note: If the new PCI card needs to be connected to another device, connect the cable of the device to the new PCI card.
9. Pivot the PCI card latch to the right and push it back in until it snaps into position.

10. If you need to install a PCI card retainer, insert the corresponding end of the PCI card retainer into the gaps in the PCI card latch as shown. Pivot the retainer downward to insert part **a** into the corresponding slot in the front fan assembly. Then, pivot the tab on the front fan assembly to close the latch inside.

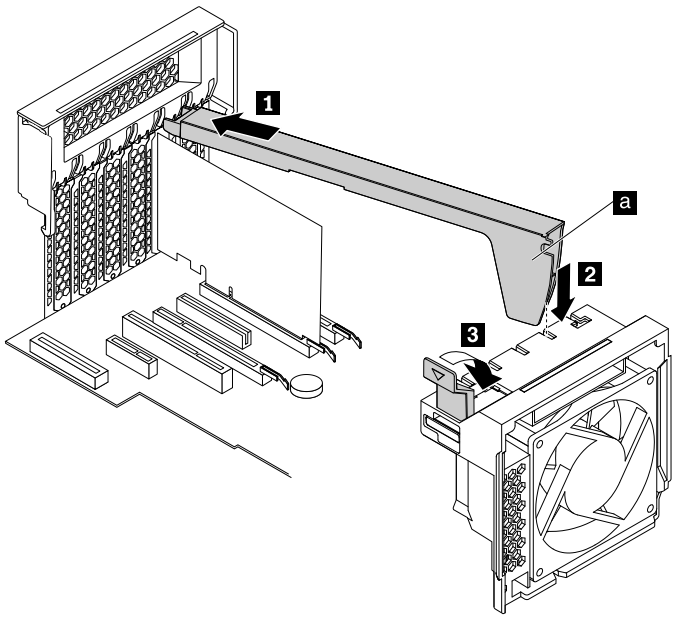

Figure 96. Installing the PCI card retainer

What to do next:

- To work with another piece of hardware, go to the appropriate section.
- To complete the installation or replacement, go to "Completing the parts replacement" on page 149.

Installing or replacing a full-length PCI card

Attention: Do not open your computer or attempt any repair before reading and understanding the "Read this first: Important safety information" on page v.

Depending on your computer model, your computer comes with one of the following combinations:

- **ThinkStation P500:** One standard PCI card slot, one PCI Express x1 card slot, two PCI Express x4 card slots, and two PCI Express x16 graphics card slots
- **ThinkStation P700:** One standard PCI card slot, one PCI Express x4 card slot, one PCI Express x8 card slot, and three PCI Express x16 graphics card slots

To install or replace a full-length PCI card, do the following:

1. Remove all media from the drives and turn off all attached devices and the computer. Then, disconnect all power cords from electrical outlets and disconnect all cables that are connected to the computer.
2. Remove the computer cover. See "Removing the computer cover" on page 75.
3. Lay the computer on its side for easier access to the system board.

4. At the rear of the computer, lift up the plastic card latch and pivot it to the left to rest it on the edge of the rear panel.

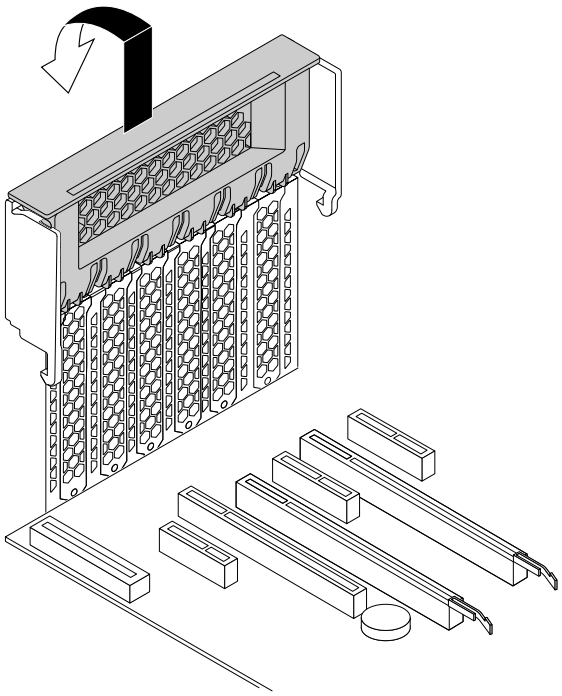

Figure 97. Opening the PCI card latch

5. Pull and pivot the tab on the front fan assembly as shown to open the latch inside.

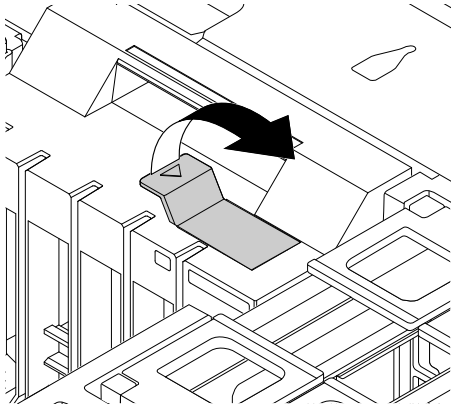

Figure 98. Opening the latch in the front fan assembly

6. Depending on whether you are installing or replacing a full-length PCI card, do one of the following:
   - If you are installing a new full-length PCI card, remove the appropriate metal slot cover.

- If you are replacing an old full-length PCI card, disconnect the power cord from the card, press the card retaining latch as shown to disengage the latch, and then grasp the old card that is currently installed and gently pull it out of the slot.

  Notes:

  – Remove any parts that might prevent your access to the latch.

  – The card fits tightly into the card slot. If necessary, alternate moving each side of the card a small amount until it is removed from the card slot.

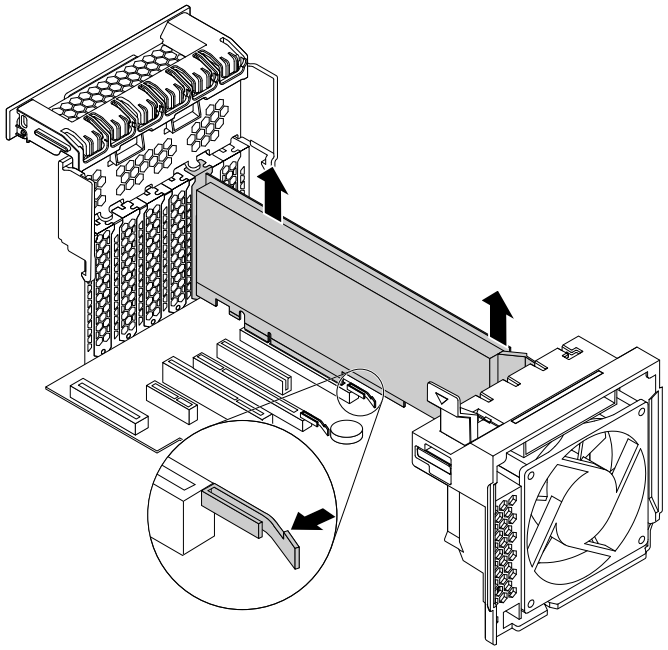

Figure 99. Removing a full-length PCI card

7. Remove the new full-length PCI card from its static-protective package.
8. Align the extender on the new full-length PCI card with the corresponding slot in the front fan assembly, and install the new card into the appropriate slot on the system board. See “Locating parts on the system board” on page 6.

   Note: It is recommended that you install the full-length PCI card into a PCI Express x16 graphics card slot for best performance.
9. Pivot the PCI card latch to the right and push it back in until it snaps into position. Then, pivot the tab on the front fan assembly to close the latch inside.
10. Connect one end of the power cable to the new full-length PCI card and the other end to the appropriate power connector on the system board. See “Locating parts on the system board” on page 6.

What to do next:

- To work with another piece of hardware, go to the appropriate section.
- To complete the installation or replacement, go to “Completing the parts replacement” on page 149.

Installing or replacing the super capacitor module

Attention: Do not open your computer or attempt any repair before reading and understanding the “Read this first: Important safety information” on page v.

To install or replace the super capacitor module, do the following:

1. Remove all media from the drives and turn off all attached devices and the computer. Then, disconnect all power cords from electrical outlets and disconnect all cables that are connected to the computer.
2. Remove the computer cover. See “Removing the computer cover” on page 75.
3. Lay the computer on its side for easier access to the super capacitor module.
4. Locate the PCI Express card slot in which the super capacitor module holder is installed. See “Locating components” on page 6.
5. If necessary, remove the direct cooling air baffle for easier operation. See “Removing and reinstalling the direct cooling air baffle” on page 76.
6. Depending on whether you are installing or replacing the super capacitor module, do one of the following:
   - If you are installing the super capacitor module, go to step 7.
   - If you are replacing the super capacitor module, do the following:
     a. Disconnect the super capacitor module cable from the RAID card.
     b. Remove the holder with the failing super capacitor module from the PCI Express card slot in which it is installed. See “Installing or replacing a PCI card” on page 121.
     c. Gently pivot the plastic retaining clip **1** on the bracket as shown and remove the failing super capacitor module from the bracket at the same time.

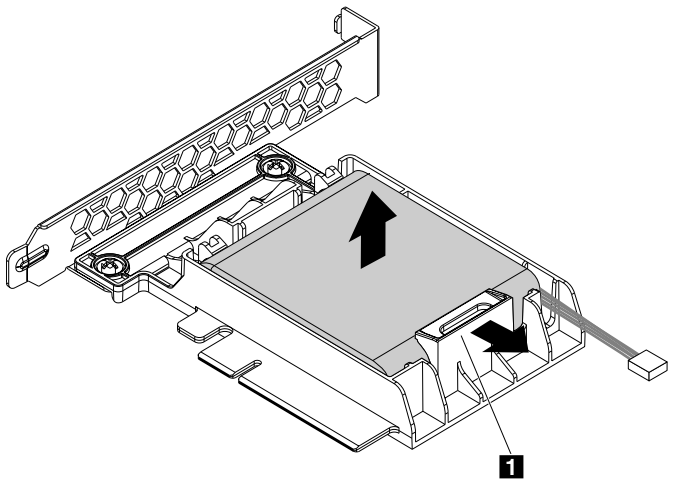

Figure 100. Removing the super capacitor module from the bracket

7. Touch the static-protective package that contains the new super capacitor module and its holder to any unpainted surface on the outside of the computer. Then, remove the new super capacitor module and its holder from the package.
8. Gently pivot the plastic retaining clip **1** on the bracket as shown and install the new super capacitor module into the bracket at the same time.

   Note: Ensure that the cable of the super capacitor module is oriented as shown.

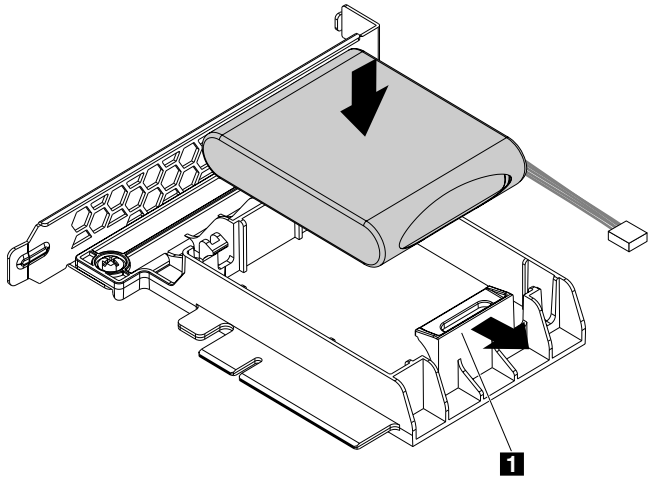

Figure 101. Installing the super capacitor module into the bracket

9. Install the holder with the new super capacitor module into a PCI Express card slot. See “Installing or replacing a PCI card” on page 121.

   Note: It is recommended that you use the PCI Express card slot with the fewest lanes.

10. Connect the super capacitor module cable to the super capacitor module connector on the RAID card as shown.

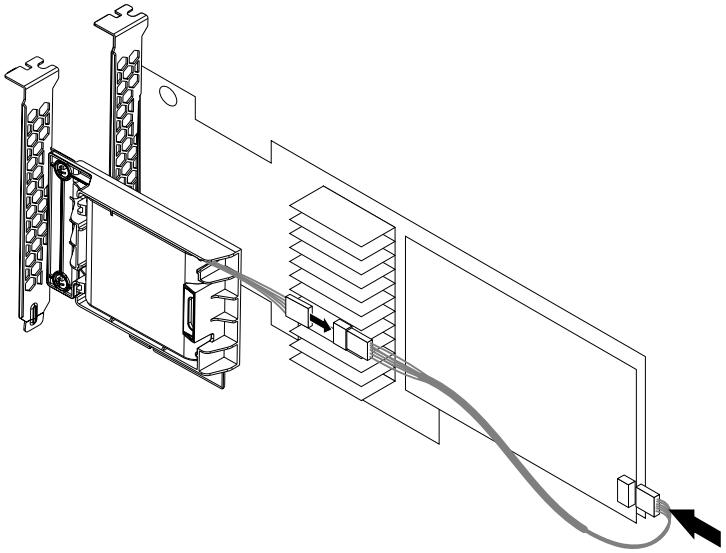

Figure 102. Connecting the super capacitor module cable

11. Reinstall the direct cooling air baffle if you have removed it. See “Removing and reinstalling the direct cooling air baffle” on page 76.

What to do next:

- To work with another piece of hardware, go to the appropriate section.
- To complete the installation or replacement, go to “Completing the parts replacement” on page 149.

Replacing the rear fan assembly

Attention: Do not open your computer or attempt any repair before reading and understanding the “Read this first: Important safety information” on page v.

Note: Your computer might come with one or two rear fan assemblies. If your computer comes with two rear fan assemblies, the following instructions apply to either of them.

To replace the rear fan assembly, do the following:

1. Remove all media from the drives and turn off all attached devices and the computer. Then, disconnect all power cords from electrical outlets and disconnect all cables that are connected to the computer.
2. Remove the computer cover. See “Removing the computer cover” on page 75.
3. Remove the direct cooling air baffle. See “Removing and reinstalling the direct cooling air baffle” on page 76.
4. Locate the rear fan assembly. See “Locating components” on page 6.
5. Disconnect the rear fan assembly cable from the rear fan connector on the system board.

   Note: If your computer comes with two microprocessors, you might remove the heat sink and fan assembly on the left side first for easier access to the rear fan connector. See “Replacing the heat sink and fan assembly” on page 133.
6. Press the retaining clip attached to the edge of the computer rear panel to remove the rear fan assembly as shown from the chassis.

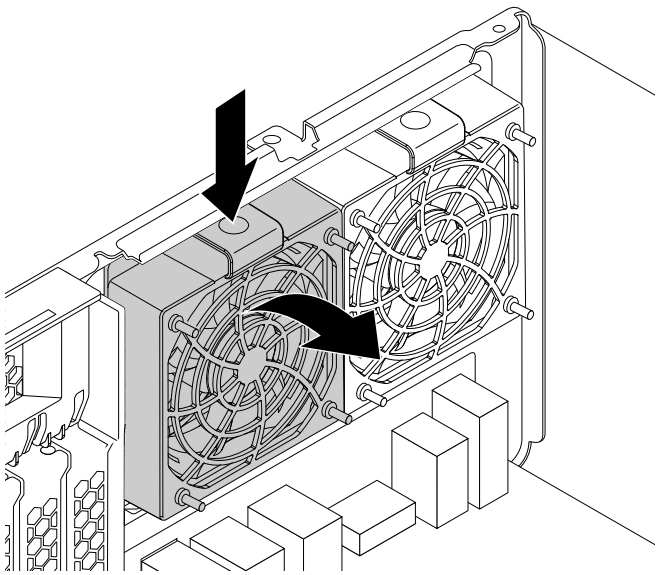

Figure 103. Removing the rear fan assembly

7. Align the two tabs **1** on the new rear fan assembly with the two corresponding slots in the computer chassis.

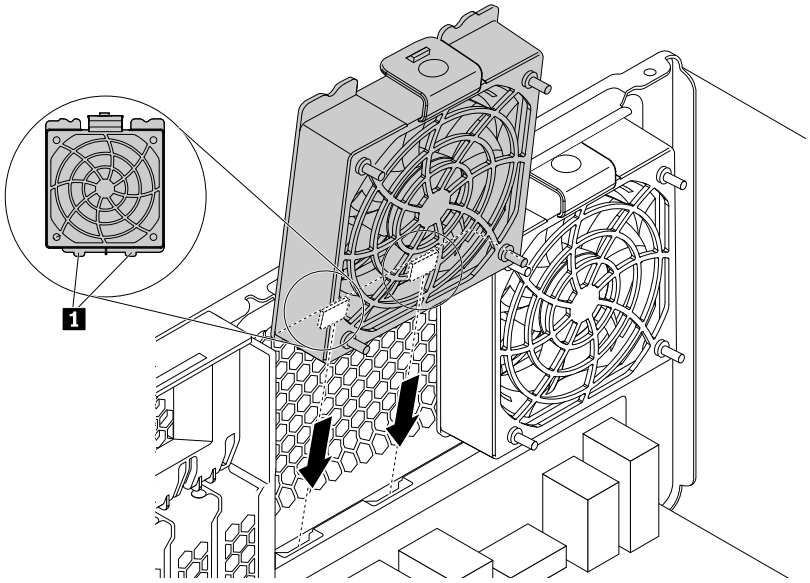

Figure 104. Positioning the rear fan assembly

8. Pivot the new rear fan assembly toward the rear panel as shown until the retaining clip snaps into position.

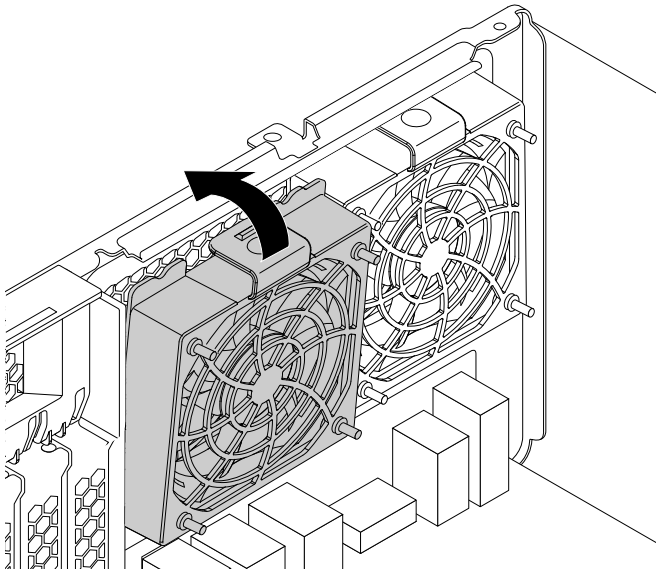

Figure 105. Installing the rear fan assembly

9. Connect the rear fan assembly cable to the rear fan connector on the system board. See “Locating parts on the system board” on page 6.
10. Reinstall the heat sink and fan assembly if you have removed it. See “Replacing the heat sink and fan assembly” on page 133.
11. Reinstall the direct cooling air baffle. See “Removing and reinstalling the direct cooling air baffle” on page 76.

What to do next:

- To work with another piece of hardware, go to the appropriate section.
- To complete the installation or replacement, go to “Completing the parts replacement” on page 149.

Replacing the heat sink and fan assembly

Attention: Do not open your computer or attempt any repair before reading and understanding the “Read this first: Important safety information” on page v.

CAUTION:

The heat sink and fan assembly might be very hot. Before you open the computer cover, turn off the computer and wait several minutes until the computer is cool.

To replace the heat sink and fan assembly, do the following:

1. Remove all media from the drives and turn off all attached devices and the computer. Then, disconnect all power cords from electrical outlets and disconnect all cables that are connected to the computer.
2. Remove the computer cover. See “Removing the computer cover” on page 75.
3. Lay the computer on its side for easier access to the system board.
4. Remove the direct cooling air baffle. See “Removing and reinstalling the direct cooling air baffle” on page 76.
5. Locate the heat sink and fan assembly. See “Locating parts on the system board” on page 6.

   Note: Depending on your computer model, your computer might come with one or two heat sink and fan assemblies. The illustrations in the following steps might be slightly different from your computer.
6. Disconnect the heat sink and fan assembly cable from the microprocessor fan connector on the system board.

7. Follow the following sequence to remove the four screws that secure the heat sink and fan assembly to the system board:
   a. Partially remove screw 1, then fully remove screw 2, and then fully remove screw 1.
   b. Partially remove screw 3, then fully remove screw 4, and then fully remove screw 3.

   Note: Carefully remove the four screws from the system board to avoid any possible damage to the system board. The four screws cannot be removed from the heat sink and fan assembly.

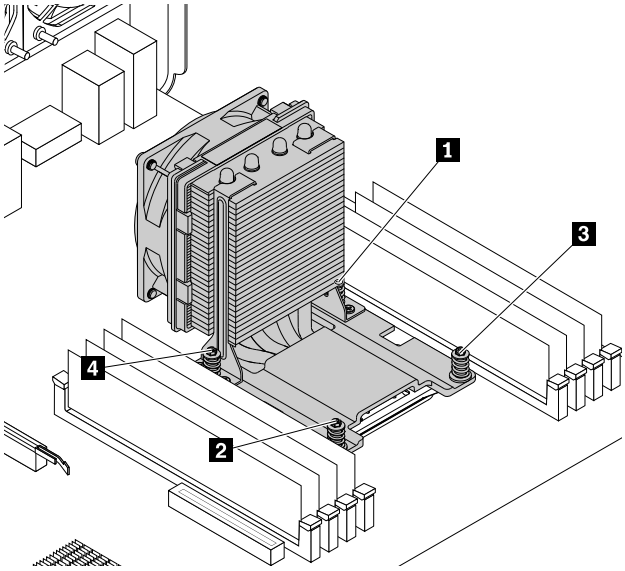

Figure 106. Removing the heat sink and fan assembly

8. Lift the failing heat sink and fan assembly off the system board.

   Notes:

   - You might have to gently twist the heat sink and fan assembly to free it from the microprocessor.
   - Do not touch the thermal grease while handling the heat sink and fan assembly.

9. Position the new heat sink and fan assembly on the system board so that the four screws are aligned with the holes on the system board.

   Note: Position the new heat sink and fan assembly so that the heat sink and fan assembly cable is toward the microprocessor fan connector on the system board.

10. Follow the following sequence to install the four screws to secure the new heat sink and fan assembly. Do not over-tighten the screws.
    a. Partially tighten screw 1, then fully tighten screw 2, and then fully tighten screw 1.
    b. Partially tighten screw 3, then fully tighten screw 4, and then fully tighten screw 3.
11. Connect the heat sink and fan assembly cable to the microprocessor fan connector on the system board. See “Locating parts on the system board” on page 6.

What to do next:

- To work with another piece of hardware, go to the appropriate section.
- To complete the installation or replacement, go to “Completing the parts replacement” on page 149.

Installing or replacing a memory module

Attention: Do not open your computer or attempt any repair before reading and understanding the “Read this first: Important safety information” on page v.

For ThinkStation P500:

Your computer has eight slots for installing or replacing DDR4 DIMMs that provide up to a maximum of 512 GB system memory. When installing or replacing a memory module, use the following guidelines:

- Use DDR4 ECC UDIMMs, DDR4 ECC RDIMMs, or DDR4 ECC LRDIMMs for your computer. Do not install any combination of UDIMMs, RDIMMs, and LRDIMMs into the same computer.
- Use 4 GB DDR4 ECC UDIMMs in any combination up to a maximum of 32 GB.
- Use 4 GB, 8 GB, 16 GB, or 32 GB DDR4 ECC RDIMMs in any combination up to a maximum of 256 GB.
- Use 32 GB or 64 GB DDR4 ECC LRDIMMs in any combination up to a maximum of 512 GB.
- Always install DIMMs in the following order as illustrated:

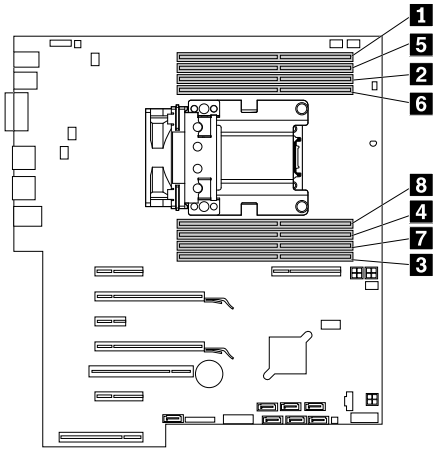

Figure 107. Memory module installation order for ThinkStation P500

For ThinkStation P700:

Your computer has 12 slots for installing or replacing DDR4 DIMMs that provide up to a maximum of 768 GB system memory. When installing or replacing a memory module, use the following guidelines:

- Use DDR4 ECC UDIMMs, DDR4 ECC RDIMMs, or DDR4 ECC LRDIMMs for your computer. Do not install any combination of UDIMMs, RDIMMs, and LRDIMMs into the same computer.
- Use 4 GB DDR4 ECC UDIMMs in any combination up to a maximum of 48GB.
- Use 4 GB, 8 GB, 16 GB, or 32 GB DDR4 ECC RDIMMs in any combination up to a maximum of 384 GB.
- Use 32 GB or 64 GB DDR4 ECC LRDIMMs in any combination up to a maximum of 768 GB.
- If your computer has only one microprocessor installed, install memory modules only in the memory slots adjacent to that microprocessor.

  Note: Ensure that the microprocessor is installed into the microprocessor socket on the right side.
- If your computer has two microprocessors installed, install equal numbers of memory modules in both sets of microprocessor DIMM slots for maximum performance.

- Always install DIMMs in the following order as illustrated:

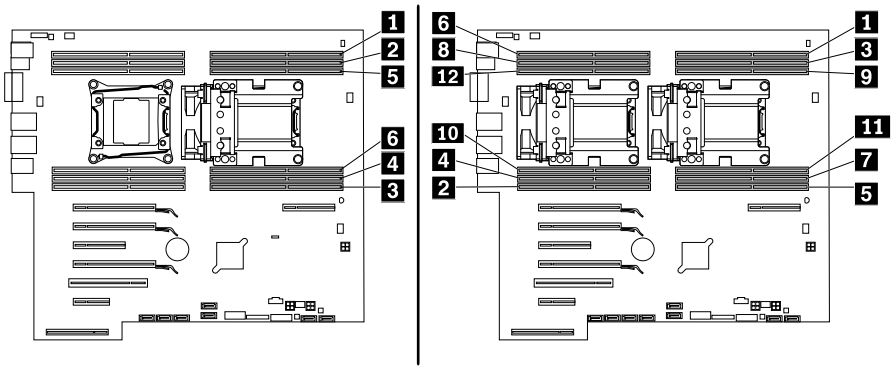

Figure 108. Memory module installation order for ThinkStation P700

To install or replace a memory module, do the following:

1. Remove all media from the drives and turn off all attached devices and the computer. Then, disconnect all power cords from electrical outlets and disconnect all cables that are connected to the computer.
2. Remove the computer cover. See “Removing the computer cover” on page 75.
3. Remove the direct cooling air baffle. See “Removing and reinstalling the direct cooling air baffle” on page 76.
4. Lay the computer on its side for easier access to the system board.
5. Locate the memory slots. See “Locating parts on the system board” on page 6.
6. Remove any parts that might prevent your access to the memory slots. Depending on your computer model, you might need to remove the optical drive bracket for easier access to the memory slots. See “Removing and reinstalling the optical drive bracket” on page 88.
7. Depending on whether you are installing or replacing a memory module, do one of the following:
   - If you are replacing an old memory module, open the retaining clips and gently pull the memory module out of the memory slot.

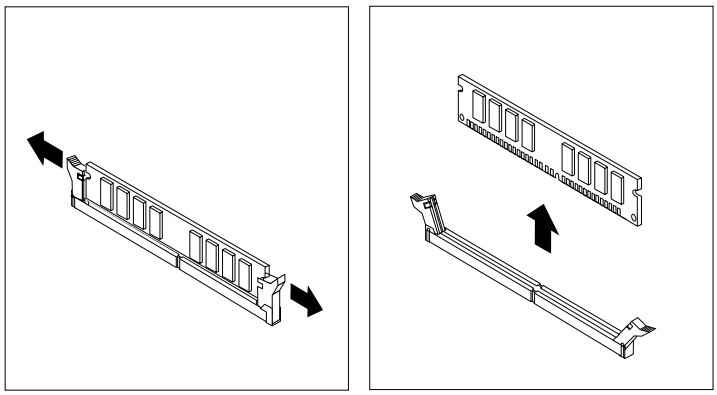

Figure 109. Removing a memory module

- If you are installing a memory module, open the retaining clips of the memory slot into which you want to install the memory module.

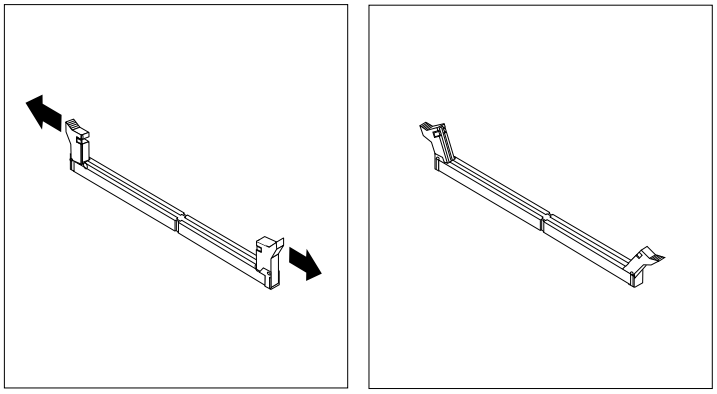

Figure 110. Opening the retaining clips

8. Position the new memory module over the memory slot. Ensure that the notch 1 on the memory module aligns correctly with the slot key 2 on the system board. Push the memory module straight down into the slot until the retaining clips close.

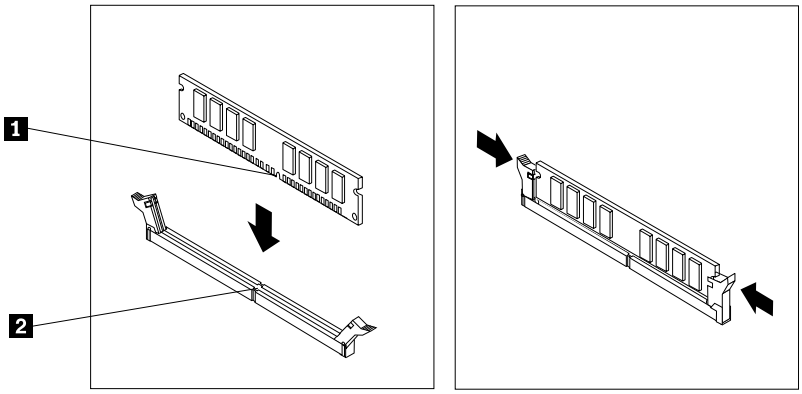

Figure 111. Installing a memory module

9. Reinstall the optical drive bracket if you have removed it. See “Removing and reinstalling the optical drive bracket” on page 88.
10. Reinstall the direct cooling air baffle. See “Removing and reinstalling the direct cooling air baffle” on page 76.

What to do next:

- To work with another piece of hardware, go to the appropriate section.
- To complete the installation or replacement, go to “Completing the parts replacement” on page 149.

Installing or replacing a flex adapter

Attention: Do not open your computer or attempt any repair before reading and understanding the “Read this first: Important safety information” on page v.

Depending on your computer model, the type of flex adapter on your computer varies.

Note: This section uses illustrations for installing or replacing a flex adapter on a ThinkStation P500 computer as examples. For a ThinkStation P700 computer, the plastic tab on the flex adapter might be shorter than illustrated.

To install or replace a flex adapter, do the following:

1. Remove all media from the drives and turn off all attached devices and the computer. Then, disconnect all power cords from electrical outlets and disconnect all cables that are connected to the computer.
2. Remove the computer cover. See “Removing the computer cover” on page 75.
3. Lay the computer on its side for easier access to the system board.
4. Locate the flex adapter slot on the system board. See “Locating parts on the system board” on page 6.
5. Pull and pivot the tab on the front fan assembly as shown to open the latch inside.

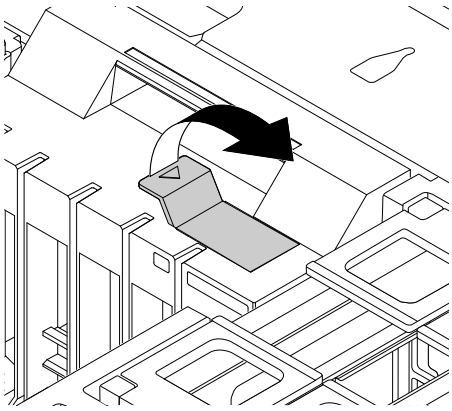

Figure 112. Opening the latch in the front fan assembly

6. If you are replacing an old flex adapter, grasp the old card that is currently installed and gently pull it out of the flex adapter slot.

   Note: If there is any cable connected to the old flex adapter, disconnect the cable first.

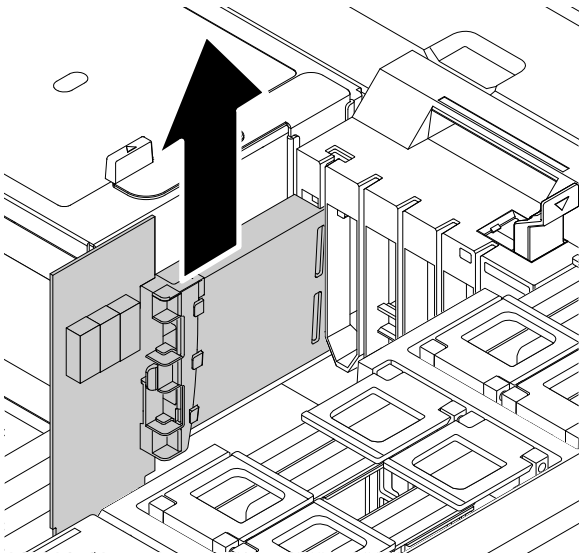

Figure 113. Removing the flex adapter

7. Align the plastic tab 1 on the flex adapter with the corresponding slot in the front fan assembly, and install the new flex adapter into the flex adapter slot.

   Note: Ensure that you install the flex adapter only into a flex adapter slot. Do not install the flex adapter into a PCI or PCI Express card slot.

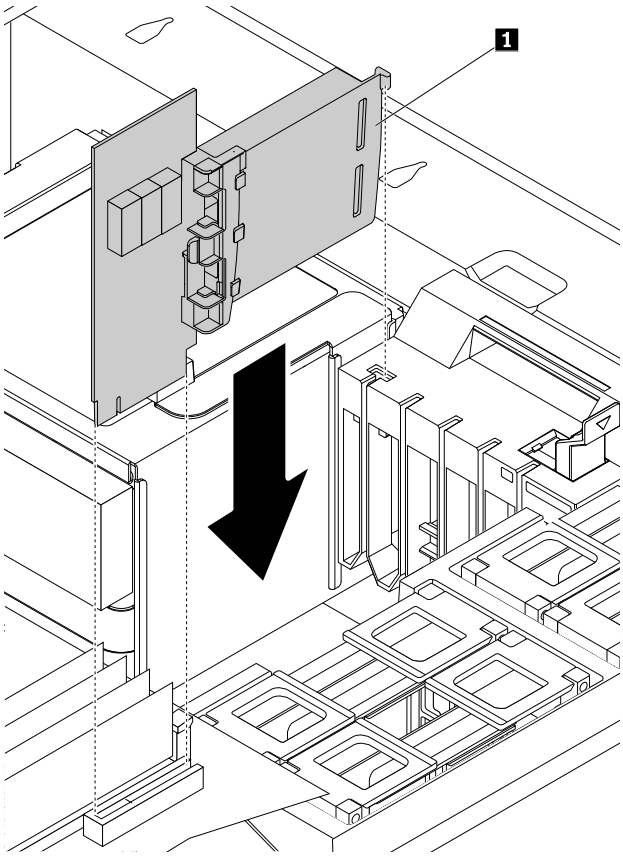

Figure 114. Installing the flex adapter

8. Pivot the tab on the front fan assembly to close the latch inside. Ensure that the new flex adapter is secured in position.
9. If the new flex adapter only works with a cable connected to it, connect the cable to the new flex adapter.

What to do next:

- To work with another piece of hardware, go to the appropriate section.
- To complete the installation or replacement, go to “Completing the parts replacement” on page 149.

Replacing the battery

Attention: Do not open your computer or attempt any repair before reading and understanding the “Read this first: Important safety information” on page v.

Your computer has a special type of memory that maintains the date, time, and settings for built-in features, such as parallel-connector assignments (configuration). A battery keeps this information active when you turn off the computer.

The battery normally requires no charging or maintenance throughout its life; however, no battery lasts forever. If the battery fails, the date, time, and configuration information (including passwords) are lost. An error message is displayed when you turn on the computer.

Refer to the “Lithium coin cell battery notice” in the *Safety, Warranty, and Setup Guide* for information about replacing and disposing of the battery.

To replace the battery, do the following:

1. Remove all media from the drives and turn off all attached devices and the computer. Then, disconnect all power cords from electrical outlets and disconnect all cables that are connected to the computer.
2. Remove the computer cover. See “Removing the computer cover” on page 75.
3. Locate the battery. See “Locating parts on the system board” on page 6.
4. Remove any parts that might impede your access to the battery. Depending on your computer model, you might need to remove the PCI card for easier access to the battery. See “Installing or replacing a PCI card” on page 121 or “Installing or replacing a full-length PCI card” on page 126.
5. Remove the old battery.

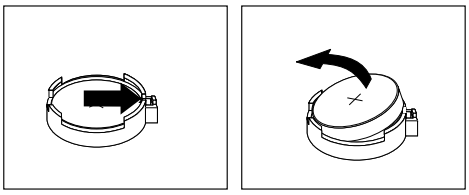

Figure 115. Removing the battery

6. Install a new battery.

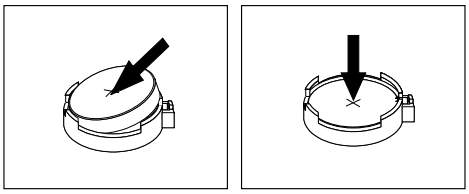

Figure 116. Installing a battery

7. Reinstall the PCI card if you have removed it. See “Installing or replacing a PCI card” on page 121 or “Installing or replacing a full-length PCI card” on page 126.
8. Reinstall the computer cover and connect the cables. See “Completing the parts replacement” on page 149.

   Note: When the computer is turned on for the first time after replacing the battery, an error message might be displayed. This is normal after replacing the battery.
9. Turn on the computer and all attached devices.
10. Use the Setup Utility program to set the date, time, and any passwords. See “Using the Setup Utility program” on page 37.

What to do next:

- To work with another piece of hardware, go to the appropriate section.

- To complete the installation or replacement, go to “Completing the parts replacement” on page 149.

Replacing the Wi-Fi units

Attention: Do not open your computer or attempt any repair before reading and understanding the “Read this first: Important safety information” on page v.

The Wi-Fi units include a Wi-Fi adapter card, a Wi-Fi card module, and a Wi-Fi antenna.

Replacing the Wi-Fi units involves the following operations:

- “Removing the Wi-Fi adapter card” on page 141
- “Removing the Wi-Fi card module” on page 143
- “Installing the Wi-Fi units” on page 144

Removing the Wi-Fi adapter card

To remove the Wi-Fi adapter card, do the following:

1. Remove all media from the drives and turn off all attached devices and the computer. Then, disconnect all power cords from electrical outlets and disconnect all cables that are connected to the computer.
2. Remove the computer cover. See “Removing the computer cover” on page 75.
3. If your computer comes with a Wi-Fi card module that supports the Bluetooth function, disconnect the Bluetooth cable from the Wi-Fi adapter card.

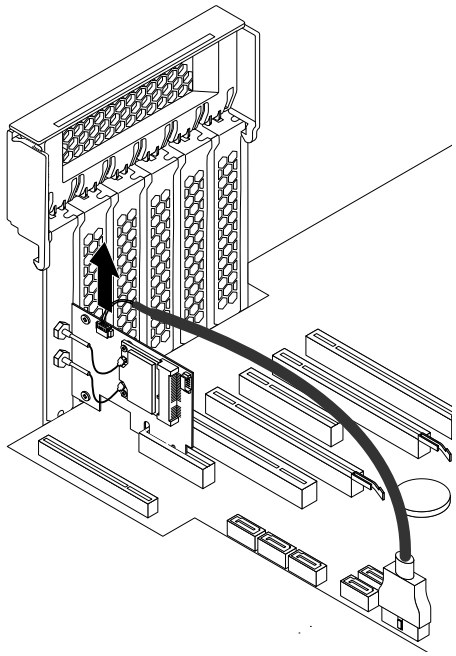

Figure 117. Disconnecting the Bluetooth cable

Note: The Bluetooth cable connects the Bluetooth connector on the Wi-Fi adapter card to the 29-in-1 card reader connector on the system board. See “Locating parts on the system board” on page 6.

4. At the rear of the computer, lift up the plastic PCI card latch and pivot it outward to rest it on the edge of the rear panel.

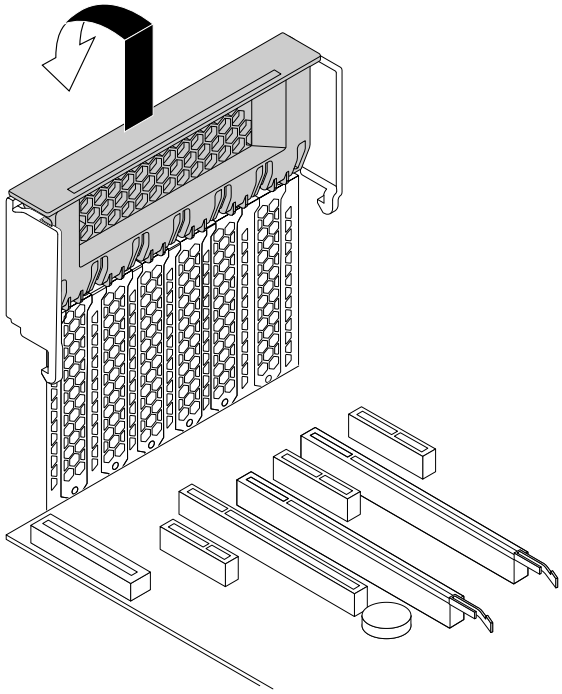

Figure 118. Opening the PCI card latch

5. Grasp the Wi-Fi adapter card that is currently installed and gently pull it out of the slot.

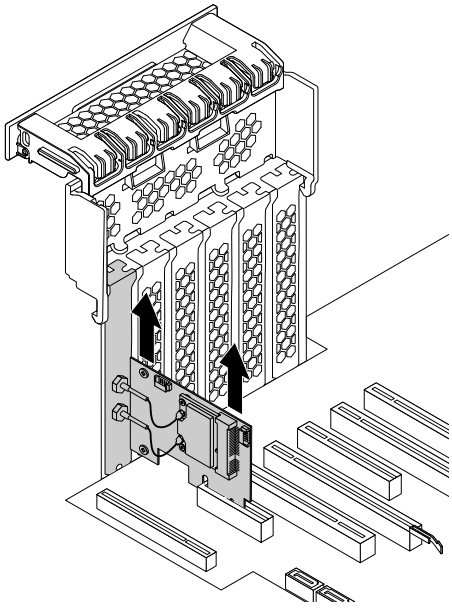

Figure 119. Removing the Wi-Fi adapter card

Note: The card fits tightly into the slot. If necessary, alternate moving each side of the card a small amount until the card is removed from the slot.

Removing the Wi-Fi card module

To remove the Wi-Fi card module, do the following:

1. Remove the Wi-Fi adapter card from the computer, and then disconnect the two Wi-Fi antenna cables from the Wi-Fi card module.

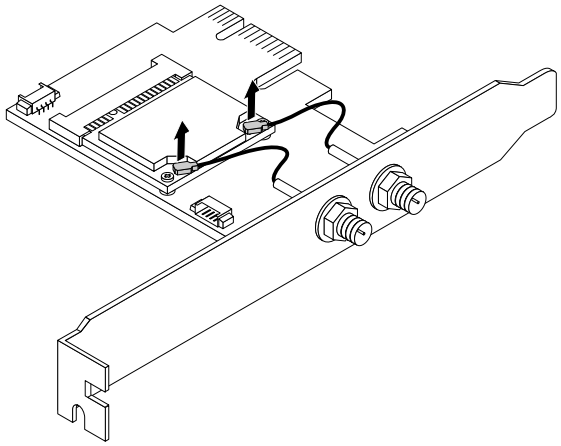

Figure 120. Disconnecting the Wi-Fi antenna cables

2. Remove the two screws that secure the Wi-Fi card module to the Wi-Fi adapter card.

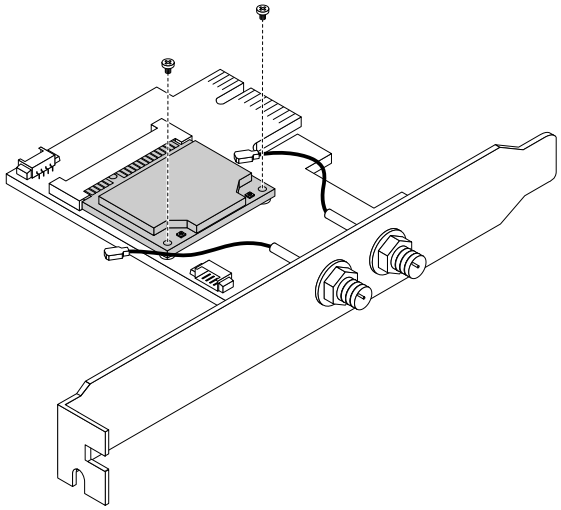

Figure 121. Removing the screws that secure the Wi-Fi card module

3. Pull the Wi-Fi card module out of the mini PCI Express slot.

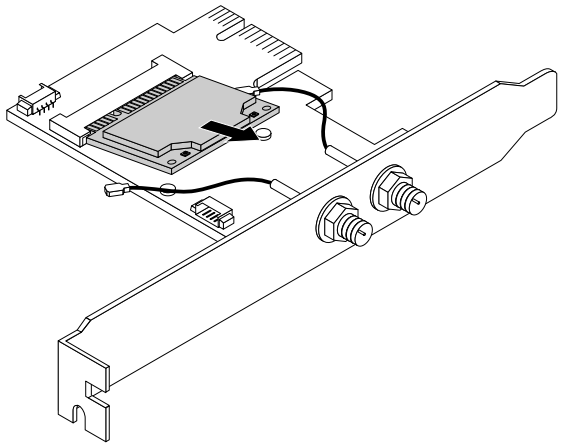

Figure 122. Removing the Wi-Fi card module

Installing the Wi-Fi units

To install the Wi-Fi units, do the following:

1. Insert the Wi-Fi card module into the mini PCI Express slot on the Wi-Fi adapter card.

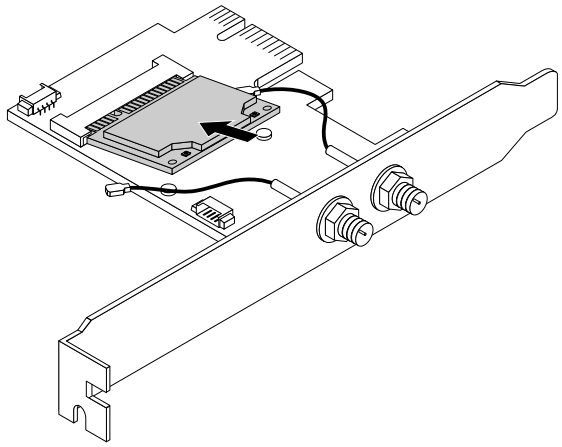

Figure 123. Installing the Wi-Fi card module

2. Install the two screws to secure the Wi-Fi card module to the Wi-Fi adapter card.

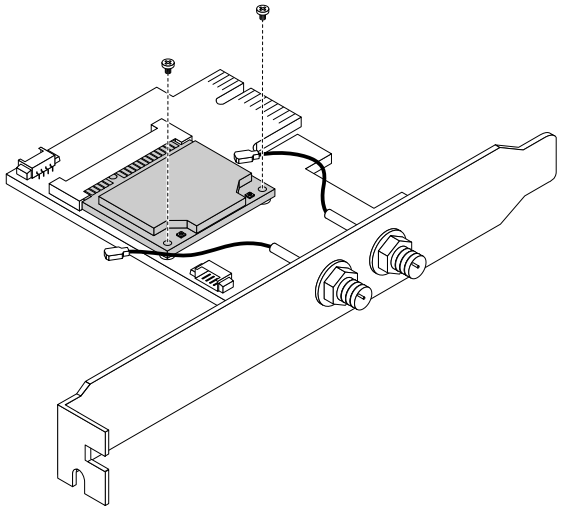

Figure 124. Installing the screws to secure the Wi-Fi card module

3. Connect the two Wi-Fi antenna cables to the Wi-Fi card module.

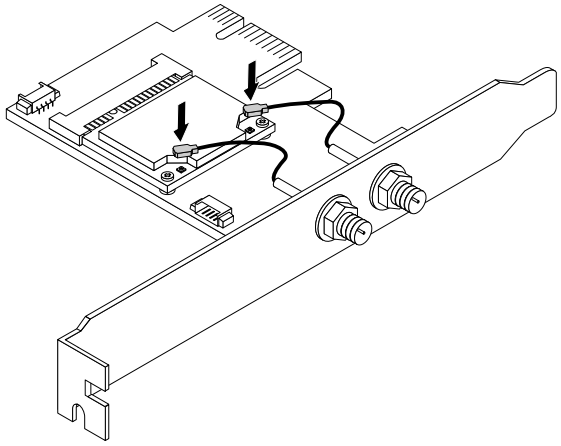

Figure 125. Installing the Wi-Fi antenna cables

4. Install the Wi-Fi adapter card into the PCI Express slot on the system board. See “Locating parts on the system board” on page 6.

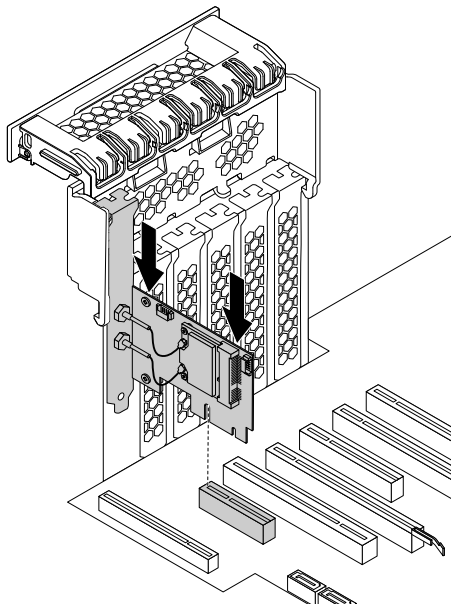

Figure 126. Installing the Wi-Fi adapter card

5. Pivot the PCI card latch and push it back in until it snaps into position.
6. If the installed Wi-Fi card module supports the Bluetooth function, use a Bluetooth cable to connect the Bluetooth connector on the Wi-Fi adapter card to the 29-in-1 card reader connector on the system board. See “Locating parts on the system board” on page 6.

What to do next:

- To work with another piece of hardware, go to the appropriate section.
- To complete the installation or replacement, go to “Completing the parts replacement” on page 149.

Installing or removing the Wi-Fi antennas

Attention: Do not open your computer or attempt any repair before reading and understanding the “Read this first: Important safety information” on page v.

Installing the Wi-Fi antenna

To install the Wi-Fi antenna, do the following:

1. Remove all media from the drives and turn off all attached devices and the computer. Then, disconnect all power cords from electrical outlets and disconnect all cables that are connected to the computer.

2. Attach the Wi-Fi antenna cable connectors **1** to the corresponding Wi-Fi antenna connectors **2** as shown.

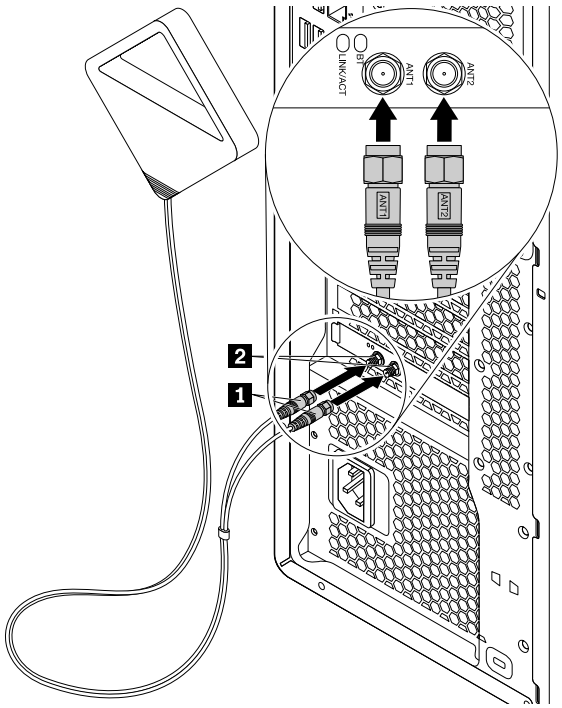

Figure 127. Installing the Wi-Fi antenna

3. Tighten the Wi-Fi antenna cable connectors to secure them to the rear of the computer.

What to do next:

- To work with another piece of hardware, go to the appropriate section.
- To complete the installation or replacement, go to “Completing the parts replacement” on page 149.

Removing the Wi-Fi antenna

To remove the Wi-Fi antenna, do the following:

1. Remove all media from the drives and turn off all attached devices and the computer. Then, disconnect all power cords from electrical outlets and disconnect all cables that are connected to the computer.

2. Unscrew the Wi-Fi antenna cable from the rear of the computer.

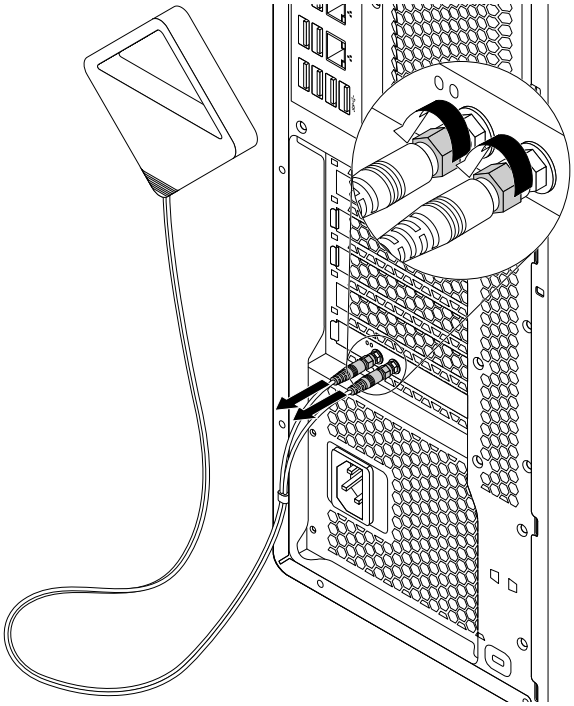

Figure 128. Removing the rear Wi-Fi antenna

What to do next:

- To work with another piece of hardware, go to the appropriate section.
- To complete the installation or replacement, go to “Completing the parts replacement” on page 149.

Replacing the keyboard or mouse

Attention: Do not open your computer or attempt any repair before reading and understanding the “Read this first: Important safety information” on page v.

Note: The keyboard and mouse are available only on some models.

To replace the keyboard or mouse, do the following:

1. Disconnect the old keyboard cable or mouse cable from the computer.

2. Connect a new keyboard or mouse to one of the USB connectors on the computer. Depending on where you want to connect the new keyboard or mouse, see “Locating connectors, controls, and indicators on the front of your computer” on page 2 or “Locating connectors on the rear of your computer” on page 2.

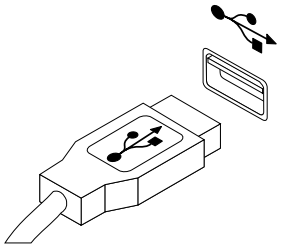

Figure 129. Connecting the USB keyboard or mouse

What to do next:

- To work with another piece of hardware, go to the appropriate section.
- To complete the installation or replacement, go to “Completing the parts replacement” on page 149.

Completing the parts replacement

After completing the installation or replacement for all parts, you need to reinstall the computer cover and reconnect cables. Depending on the parts you installed or replaced, you might need to confirm the updated information in the Setup Utility program. See “Using the Setup Utility program” on page 37.

To reinstall the computer cover and reconnect cables to your computer, do the following:

1. Ensure that all components have been reassembled correctly and that no tools or loose screws are left inside your computer. See “Locating components” on page 6 for the locations of various components in your computer.
2. Ensure that the cables are routed correctly before reinstalling the computer cover. Keep cables clear of the hinges and sides of the computer chassis to avoid interference with reinstalling the computer cover.

3. Position the computer cover on the chassis so that the slots on both the top and the bottom of the cover are aligned with the corresponding little posts on the chassis.

   Note: Keep the handle on the cover latch lifted before you finish reinstalling the computer cover.

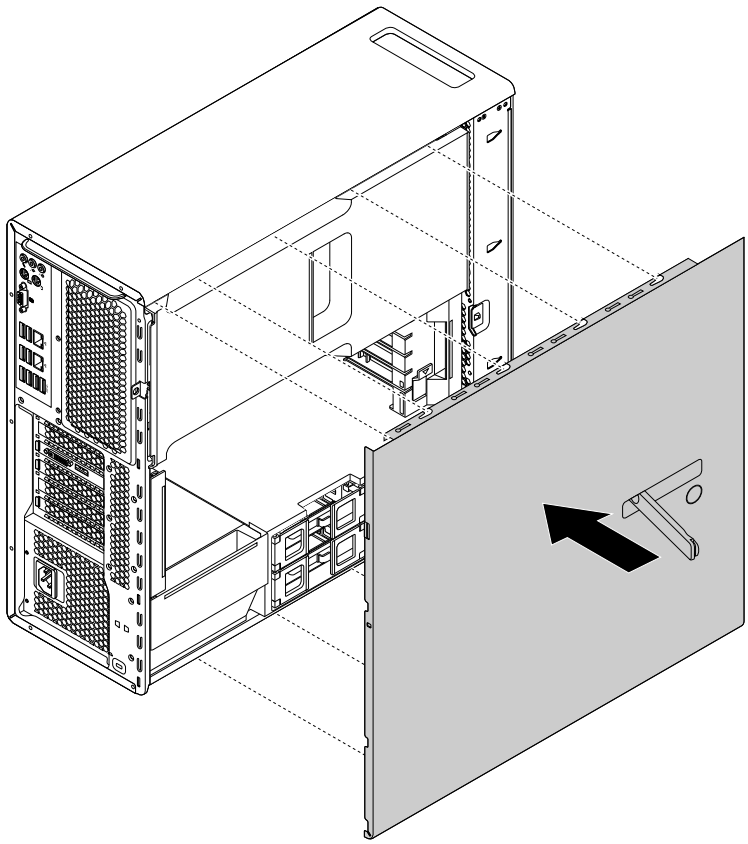

Figure 130. Positioning the computer cover

4. Pivot the lifted handle on the cover latch inward as shown to the closed position so that the computer cover is secured in position.

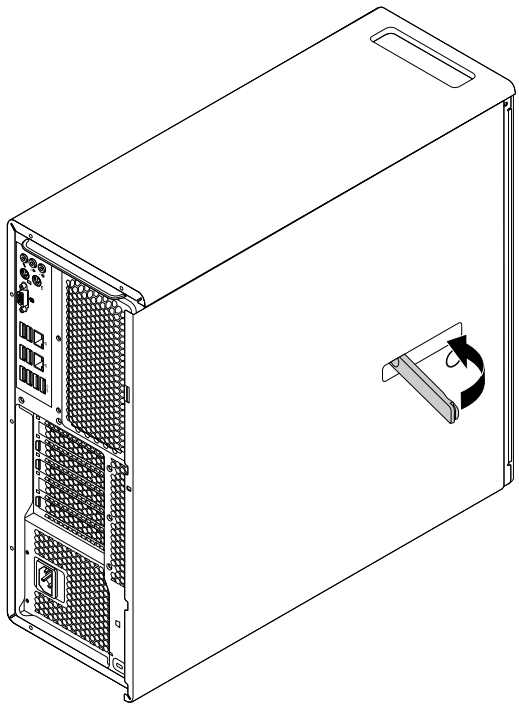

Figure 131. Reinstalling the computer cover

5. If there is any locking device available, such as a key lock, a padlock, or a Kensington-style cable lock, lock the computer cover. See Chapter 4 “Security” on page 33.
6. Reconnect the external cables and power cords to the computer. See “Locating connectors on the rear of your computer” on page 2.
7. To update your configuration, see “Using the Setup Utility program” on page 37.

Note: In most areas of the world, Lenovo requires the return of the defective CRU. Information about this will come with the CRU or will come a few days after the CRU arrives.

Obtaining device drivers

You can obtain device drivers that are not preinstalled in your operating system at http://www.lenovo.com/support. Installation instructions are provided in readme files with the device-driver files.

Chapter 10. Getting information, help, and service

This chapter contains information about help, service, and technical assistance for products manufactured by Lenovo.

Information resources

You can use the information in this section to access useful resources relating to your computing needs.

Lenovo ThinkVantage Tools

The Lenovo ThinkVantage Tools program provides easy access to various tools to help you work more easily and securely.

To access the Lenovo ThinkVantage Tools program, click **Start → All Programs → Lenovo ThinkVantage Tools**.

Windows help system

The Windows help system provides you with detailed information about using the Windows operating system.

To access the Windows help system, do the following:

- For Windows 7: Click the Start button to open the Start menu, and then click **Help and Support**. You can choose to use the online or offline help at the bottom of the screen.
- For Windows 8.1: Move the pointer to the top-right or bottom-right corner of the screen to display the charms. Then, click **Settings → Help**. You can choose to use the online or offline help at the bottom of the screen.
- For Windows 10: Click the Start button to open the Start menu, and then click **Get started**.

Note: Using online help (Windows 7 and Windows 8.1) and the help for Windows 10 requires an active Internet connection.

Safety and Warranty

The *Safety, Warranty, and Setup Guide* that is provided with your computer contains information on safety, setup, warranty, and notices. The safety information in the *Safety, Warranty, and Setup Guide* provides information you need to know before setting up and using this product. Read and understand all safety information provided in the *Safety, Warranty, and Setup Guide* before using this product.

The information in “Read this first: Important safety information” on page v of this *User Guide* provides additional safety information that applies to topics and tasks described in this publication. Read and understand all safety information provided in that section before disassembling or upgrading this product.

Lenovo Web site

The Lenovo Web site (http://www.lenovo.com) provides up-to-date information and services to help you buy, upgrade, and maintain your computer. You can also do the following:

- Shop for desktop and notebook computers, monitors, projectors, upgrades and accessories for your computer, and special offers.
- Purchase additional services, such as support for hardware, operating systems, application programs, network setup and configuration, and custom installations.

© Copyright Lenovo 2014, 2015

- Purchase upgrades and extended hardware repair services.
- Download the latest device drivers and software updates for your computer model.
- Access the online manuals for your products.
- Access the Lenovo Limited Warranty.
- Access troubleshooting and support information for your computer model and other supported products.
- Find the service and support phone numbers for your country or region.
- Find a Service Provider located near you.

Lenovo Support Web site

Technical support information is available on the Lenovo Support Web site at:
http://www.lenovo.com/support

This Web site is updated with the latest support information such as the following:

- Drivers and software
- Diagnostic solutions
- Product and service warranty
- Product and parts details
- User guides and manuals
- Knowledge base and frequently asked questions

Help and service

This section contains information about obtaining help and service.

Using the documentation and diagnostic program

If you experience a problem with your computer, see Chapter 7 “Troubleshooting and diagnostics” on page 53. For information on additional resources to help you troubleshoot your computer problem, see “Information resources” on page 153.

If you suspect a software problem, see the documentation that comes with the operating system or software program, including readme files and online help.

Most computers come with a diagnostic program that help you identify hardware problems.

You can also get the latest technical information and download device drivers and updates from Lenovo Support Web site at:
http://www.lenovo.com/support

Calling for service

During the warranty period, you can get help and information by telephone through the Customer Support Center.

The following services are available during the warranty period:

- **Problem determination** - Trained service personnel are available to assist you with determining a hardware problem and deciding what action is necessary to fix the problem.
- **Hardware repair** - If the problem is caused by hardware under warranty, trained service personnel are available to provide the applicable level of service.

- **Engineering Change management** - There might be changes that are required after a product has been sold. Lenovo or your reseller will make selected Engineering Changes (ECs) that apply to your hardware available.

These items are not covered by the warranty:
- Replacement or use of parts not manufactured for or by Lenovo or non-warranted Lenovo parts
- Identification of software problem sources
- Configuration of BIOS as part of an installation or upgrade
- Changes, modifications, or upgrades to device drivers
- Installation and maintenance of network operating systems (NOS)
- Installation and maintenance of application programs

Refer to the *Safety, Warranty, and Setup Guide* that comes with your computer for information about your warranty type and duration. You must retain your proof of purchase to obtain warranty service.

For a list of Lenovo Support phone numbers, go to http://www.lenovo.com/support/phone or refer to the *Safety, Warranty, and Setup Guide* that comes with your computer.

Note: Phone numbers are subject to change without notice. If the number for your country or region is not provided, contact your Lenovo reseller or Lenovo marketing representative.

If possible, be at your computer when you call. Have the following information available:
- Machine type and model
- Serial numbers of your hardware products
- Description of the problem
- Exact wording of any error messages
- Hardware and software configuration information

Using other services

You might travel with your computer or relocate it to a country or region where the machine type for your desktop or notebook computer is sold. In such a situation, your computer might be eligible for International Warranty Service, which automatically entitles you to obtain warranty service throughout the warranty period. Service will be performed by service providers authorized to perform warranty service.

Service methods and procedures vary by country, and some services might not be available in all countries. International Warranty Service is delivered through the method of service (such as depot, carry-in, or on-site service) that is provided in the servicing country. Service centers in certain countries might not be able to service all models of a particular machine type. In some countries, fees and restrictions might apply at the time of service.

To determine whether your computer is eligible for International Warranty Service and to view a list of the countries or regions where service is available, go to http://www.lenovo.com/support. Then click **Product & Service Warranty**, and follow the instructions on the screen.

For technical assistance with the installation of or questions related to Service Packs for your preinstalled Microsoft Windows product, go to the Microsoft Product Support Web site at http://support.microsoft.com. You also can contact the Lenovo Customer Support Center for help. Some fees might apply.

Purchasing additional services

During and after the warranty period, you can purchase additional services. Examples of these additional services include:

- Support for hardware, operating systems, and application programs
- Network setup and configuration services

- Upgraded or extended hardware repair services
- Custom installation services

Service availability and service name might vary by country or region. For more information about these services, go to the Lenovo Web site at:
http://www.lenovo.com

Chapter 11. System memory speed

The Intel Xeon® microprocessor families compatible with this ThinkStation computer feature an integrated memory controller, which provides the microprocessor with direct access to the system memory. Because of this design, the system memory speed will be determined by a number of factors, including the microprocessor model and the type, speed, size (capacity), and number of DIMMs installed. Refer to the following table for the information on the supported system memory speed for your own computer model.

Table 1. DIMM type and speed: UDIMM PC4-2133-E

DIMM operating voltage	Microprocessor model	Memory frequency
1.2 V	Intel Xeon E5-2699 v3, E5-2698 v3, E5-2697 v3, E5-2695 V3, E5-2690 v3, E5-2685 v3, E5-2683 v3, E5-2680 v3, E5-2670 v3, E5-2667 v3, E5-2660 v3, E5-2650 v3, E5-2643 v3, E5-2637 v3, E5-2650L v3, E5-1680 v3, E5-1660 v3, E5-1650 v3, E5-1630 v3, E5-1620 v3	2133 MHz
1.2 V	Intel Xeon E5-2640 v3, E5-2630 v3, E5-2623 v3, E5-2620 v3, E5-2630L v3, E5-1607 v3, E5-1603 v3	1866 MHz
1.2 V	Intel Xeon E5-2609 v3, E5-2603 v3	1600 MHz

Table 2. DIMM type and speed: RDIMM PC4-2133-R

DIMM operating voltage	Microprocessor model	Memory frequency
1.2 V	Intel Xeon E5-2699 v3, E5-2698 v3, E5-2697 v3, E5-2695 V3, E5-2690 v3, E5-2685 v3, E5-2683 v3, E5-2680 v3, E5-2670 v3, E5-2667 v3, E5-2660 v3, E5-2650 v3, E5-2643 v3, E5-2637 v3, E5-2650L v3, E5-1680 v3, E5-1660 v3, E5-1650 v3, E5-1630 v3, E5-1620 v3	2133 MHz
1.2 V	Intel Xeon E5-2640 v3, E5-2630 v3, E5-2623 v3, E5-2620 v3, E5-2630L v3, E5-1607 v3, E5-1603 v3	1866 MHz
1.2 V	Intel Xeon E5-2609 v3, E5-2603 v3	1600 MHz

Table 3. DIMM type and speed: LRDIMM PC4-2133-L

DIMM operating voltage	Microprocessor model	Memory frequency
1.2 V	Intel Xeon E5-2699 v3, E5-2698 v3, E5-2697 v3, E5-2695 V3, E5-2690 v3, E5-2685 v3, E5-2683 v3, E5-2680 v3, E5-2670 v3, E5-2667 v3, E5-2660 v3, E5-2650 v3, E5-2643 v3, E5-2637 v3, E5-2650L v3, E5-1680 v3, E5-1660	2133 MHz

© Copyright Lenovo 2014, 2015

Table 3. DIMM type and speed: LRDIMM PC4-2133-L (continued)

DIMM operating voltage	Microprocessor model	Memory frequency
	v3, E5-1650 v3, E5-1630 v3, E5-1620 v3	
1.2 V	Intel Xeon E5-2640 v3, E5-2630 v3, E5-2623 v3, E5-2620 v3, E5-2630L v3, E5-1607 v3, E5-1603 v3	1866 MHz
1.2 V	Intel Xeon E5-2609 v3, E5-2603 v3	1600 MHz

Appendix A. Regulatory information

Export classification notice

This product is subject to the United States Export Administration Regulations (EAR) and has an Export Classification Control Number (ECCN) of 4A994.b. It can be re-exported except to any of the embargoed countries in the EAR E1 country list.

Electronic emissions notices

The following information refers to Lenovo personal computer machine types 30A6, 30A7, 30A8, and 30A9.

Federal Communications Commission Declaration of Conformity

This equipment has been tested and found to comply with the limits for a Class B digital device, pursuant to Part 15 of the FCC Rules. These limits are designed to provide reasonable protection against harmful interference in a residential installation. This equipment generates, uses, and can radiate radio frequency energy and, if not installed and used in accordance with the instructions, may cause harmful interference to radio communications. However, there is no guarantee that interference will not occur in a particular installation. If this equipment does cause harmful interference to radio or television reception, which can be determined by turning the equipment off and on, the user is encouraged to try to correct the interference by one or more of the following measures:

- Reorient or relocate the receiving antenna.
- Increase the separation between the equipment and receiver.
- Connect the equipment into an outlet on a circuit different from that to which the receiver is connected.
- Consult an authorized dealer or service representative for help.

Lenovo is not responsible for any radio or television interference caused by using other than specified or recommended cables and connectors or by unauthorized changes or modifications to this equipment. Unauthorized changes or modifications could void the user's authority to operate the equipment.

This device complies with Part 15 of the FCC Rules. Operation is subject to the following two conditions: (1) this device may not cause harmful interference, and (2) this device must accept any interference received, including interference that may cause undesired operation.

Responsible Party:
Lenovo (United States) Incorporated
1009 Think Place - Building One
Morrisville, NC 27560
Phone Number: 919-294-5900

Industry Canada Class B emission compliance statement

CAN ICES-3(B)/NMB-3(B)

European Union - Compliance to the Electromagnetic Compatibility Directive

© Copyright Lenovo 2014, 2015

This product is in conformity with the protection requirements of EU Council Directive 2004/108/EC on the approximation of the laws of the Member States relating to electromagnetic compatibility. Lenovo cannot accept responsibility for any failure to satisfy the protection requirements resulting from a non-recommended modification of the product, including the installation of option cards from other manufacturers.

This product has been tested and found to comply with the limits for Class B Information Technology Equipment according to European Standard EN 55022. The limits for Class B equipment were derived for typical residential environments to provide reasonable protection against interference with licensed communication devices.

Lenovo, Einsteinova 21, 851 01 Bratislava, Slovakia

CE

German Class B compliance statement

Deutschsprachiger EU Hinweis:

Hinweis für Geräte der Klasse B EU-Richtlinie zur Elektromagnetischen Verträglichkeit
Dieses Produkt entspricht den Schutzanforderungen der EU-Richtlinie 2004/108/EG (früher 89/336/EWG) zur Angleichung der Rechtsvorschriften über die elektromagnetische Verträglichkeit in den EU-Mitgliedsstaaten und hält die Grenzwerte der EN 55022 Klasse B ein.

Um dieses sicherzustellen, sind die Geräte wie in den Handbüchern beschrieben zu installieren und zu betreiben. Des Weiteren dürfen auch nur von der Lenovo empfohlene Kabel angeschlossen werden. Lenovo übernimmt keine Verantwortung für die Einhaltung der Schutzanforderungen, wenn das Produkt ohne Zustimmung der Lenovo verändert bzw. wenn Erweiterungskomponenten von Fremdherstellern ohne Empfehlung der Lenovo gesteckt/eingebaut werden.

Deutschland:

Einhaltung des Gesetzes über die elektromagnetische Verträglichkeit von Betriebsmitteln
Dieses Produkt entspricht dem „Gesetz über die elektromagnetische Verträglichkeit von Betriebsmitteln“ EMVG (früher „Gesetz über die elektromagnetische Verträglichkeit von Geräten“). Dies ist die Umsetzung der EU-Richtlinie 2004/108/EG (früher 89/336/EWG) in der Bundesrepublik Deutschland.

Zulassungsbescheinigung laut dem Deutschen Gesetz über die elektromagnetische Verträglichkeit von Betriebsmitteln, EMVG vom 20. Juli 2007 (früher Gesetz über die elektromagnetische Verträglichkeit von Geräten), bzw. der EMV EG Richtlinie 2004/108/EC (früher 89/336/EWG), für Geräte der Klasse B.

Dieses Gerät ist berechtigt, in Übereinstimmung mit dem Deutschen EMVG das EG-Konformitätszeichen - CE - zu führen. Verantwortlich für die Konformitätserklärung nach Paragraf 5 des EMVG ist die Lenovo (Deutschland) GmbH, Gropiusplatz 10, D-70563 Stuttgart.

Informationen in Hinsicht EMVG Paragraf 4 Abs. (1) 4:
Das Gerät erfüllt die Schutzanforderungen nach EN 55024 und EN 55022 Klasse B.

Korea Class B compliance statement

B급 기기(가정용 방송통신기자재)
이 기기는 가정용(B급) 전자파적합기기로서 주로 가정에서 사용하는 것을 목적으로 하며, 모든 지역에서 사용할 수 있습니다

Japan VCCI Class B compliance statement

この装置は，クラスB情報技術装置です。 この装置は，家庭環境で使用することを目的としていますが，この装置がラジオやテレビジョン受信機に近接して使用されると，受信障害を引き起こすことがあります。
取扱説明書に従って正しい取り扱いをして下さい。 VCCI-B

Japan compliance statement for products which connect to the power mains with rated current less than or equal to 20 A per phase

日本の定格電流が 20A/相 以下の機器に対する高調波電流規制
高調波電流規格 JIS C 61000-3-2 適合品

Japan notice for ac power cord

The ac power cord shipped with your product can be used only for this specific product. Do not use the ac power cord for other devices.

本製品およびオプションに電源コード・セットが付属する場合は、
それぞれ専用のものになっていますので他の電気機器には使用し
ないでください。

Lenovo product service information for Taiwan

台灣 Lenovo 產品服務資訊如下:
荷蘭商聯想股份有限公司台灣分公司
台北市內湖區堤頂大道二段89號5樓
服務電話：0800-000-702

Keyboard and mouse compliance statement for Taiwan

本產品隨貨附已取得經濟部標準檢驗局認可之PS/2或USB的鍵盤與滑鼠一組

Eurasian compliance mark

EAC

Brazil audio notice

Ouvir sons com mais de 85 decibéis por longos períodos pode provocar danos ao sistema auditivo.

Mexico wireless-radio compliance information

Advertencia: En Mexico la operación de este equipo estásujeta a las siguientes dos condiciones: (1) es posible que este equipo o dispositivo no cause interferencia perjudicial y (2) este equipo o dispositivo debe aceptar cualquier interferencia, incluyendo la que pueda causar su operación no deseada.

Additional regulatory information

For additional regulatory information, refer to the *Regulatory Notice* shipped with your computer. Depending on the configuration of your computer and the country or region where the computer was purchased, you might have received additional printed regulatory notices. All regulatory notices are available on the Lenovo Support Web site in electronic format. To access electronic copies of the documentation, go to http://www.lenovo.com/UserManuals.

Appendix B. WEEE and recycling information

Lenovo encourages owners of information technology (IT) equipment to responsibly recycle their equipment when it is no longer needed. Lenovo offers a variety of programs and services to assist equipment owners in recycling their IT products. For information on recycling Lenovo products, go to: http://www.lenovo.com/recycling

Important WEEE information

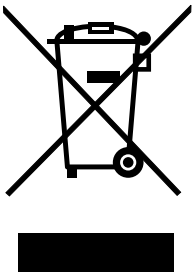

The WEEE marking on Lenovo products applies to countries with WEEE and e-waste regulations (for example, European Directive 2002/96/EC, India E-Waste Management & Handling Rules, 2011). Appliances are labeled in accordance with local regulations concerning waste electrical and electronic equipment (WEEE). These regulations determine the framework for the return and recycling of used appliances as applicable within each geography. This label is applied to various products to indicate that the product is not to be thrown away, but rather put in the established collection systems for reclaiming these end of life products.

Users of electrical and electronic equipment (EEE) with the WEEE marking must not dispose of end of life EEE as unsorted municipal waste, but use the collection framework available to them for the return, recycle, and recovery of WEEE and to minimize any potential effects of EEE on the environment and human health due to the presence of hazardous substances. For additional WEEE information, go to: http://www.lenovo.com/recycling

Recycling information for Japan

Collecting and recycling a disused Lenovo computer or monitor

If you are a company employee and need to dispose of a Lenovo computer or monitor that is the property of the company, you must do so in accordance with the Law for Promotion of Effective Utilization of Resources. Computers and monitors are categorized as industrial waste and should be properly disposed of by an industrial waste disposal contractor certified by a local government. In accordance with the Law for Promotion of Effective Utilization of Resources, Lenovo Japan provides, through its PC Collecting and Recycling Services, for the collecting, reuse, and recycling of disused computers and monitors. For details, visit the Lenovo Web site at http://www.lenovo.com/recycling/japan. Pursuant to the Law for Promotion of Effective Utilization of Resources, the collecting and recycling of home-used computers and monitors by the manufacturer was begun on October 1, 2003. This service is provided free of charge for home-used computers sold after October 1, 2003. For details, visit the Lenovo Web site at http://www.lenovo.com/recycling/japan.

© Copyright Lenovo 2014, 2015

Disposing of Lenovo computer components

Some Lenovo computer products sold in Japan may have components that contain heavy metals or other environmental sensitive substances. To properly dispose of disused components, such as a printed circuit board or drive, use the methods described above for collecting and recycling a disused computer or monitor.

Disposing of disused lithium batteries from Lenovo computers

A button-shaped lithium battery is installed inside your Lenovo computer to provide power to the computer clock while the computer is off or disconnected from the main power source. If you need to replace it with a new one, contact your place of purchase or contact Lenovo for service. If you need to dispose of a disused lithium battery, insulate it with vinyl tape, contact your place of purchase or an industrial-waste-disposal operator, and follow their instructions. Disposal of a lithium battery must comply with local ordinances and regulations.

Recycling information for Brazil

Declarações de Reciclagem no Brasil

Descarte de um Produto Lenovo Fora de Uso

Equipamentos elétricos e eletrônicos não devem ser descartados em lixo comum, mas enviados à pontos de coleta, autorizados pelo fabricante do produto para que sejam encaminhados e processados por empresas especializadas no manuseio de resíduos industriais, devidamente certificadas pelos orgãos ambientais, de acordo com a legislação local.

A Lenovo possui um canal específico para auxiliá-lo no descarte desses produtos. Caso você possua um produto Lenovo em situação de descarte, ligue para o nosso SAC ou encaminhe um e-mail para: reciclar@lenovo.com, informando o modelo, número de série e cidade, a fim de enviarmos as instruções para o correto descarte do seu produto Lenovo.

Battery recycling information for Taiwan

廢電池請回收

Battery recycling information for the European Union

EU

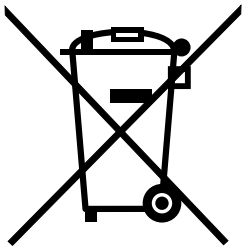

Notice: This mark applies only to countries within the European Union (EU).

Batteries or packaging for batteries are labeled in accordance with European Directive 2006/66/EC concerning batteries and accumulators and waste batteries and accumulators. The Directive determines the framework for the return and recycling of used batteries and accumulators as applicable throughout the European Union. This label is applied to various batteries to indicate that the battery is not to be thrown away, but rather reclaimed upon end of life per this Directive.

In accordance with the European Directive 2006/66/EC, batteries and accumulators are labeled to indicate that they are to be collected separately and recycled at end of life. The label on the battery may also include a chemical symbol for the metal concerned in the battery (Pb for lead, Hg for mercury, and Cd for cadmium). Users of batteries and accumulators must not dispose of batteries and accumulators as unsorted municipal waste, but use the collection framework available to customers for the return, recycling, and treatment of batteries and accumulators. Customer participation is important to minimize any potential effects of batteries and accumulators on the environment and human health due to the potential presence of hazardous substances. For proper collection and treatment, go to:
http://www.lenovo.com/recycling

Appendix C. Restriction of Hazardous Substances Directive (RoHS)

European Union RoHS

Lenovo products sold in the European Union, on or after 3 January 2013 meet the requirements of Directive 2011/65/EU on the restriction of the use of certain hazardous substances in electrical and electronic equipment (“RoHS recast” or “RoHS 2”).

For more information about Lenovo progress on RoHS, go to:
http://www.lenovo.com/social_responsibility/us/en/RoHS_Communication.pdf

China RoHS

产品中有害物质的名称及含量

部件名称	有害物质					
	铅(Pb)	汞(Hg)	镉(Cd)	六价铬 (Cr(VI))	多溴连苯 (PBB)	多溴二苯醚 (PBDE)
印刷电路板组件*	X	O	O	O	O	O
硬盘	X	O	O	O	O	O
光驱	X	O	O	O	O	O
内存	X	O	O	O	O	O
电脑I/O 附件	X	O	O	O	O	O
电源	X	O	O	O	O	O
键盘	X	O	O	O	O	O
鼠标	X	O	O	O	O	O
机箱/ 附件	X	O	O	O	O	O

本表格依据 SJ/T 11364 的规定编制。
O：表示该有害物质在该部件所有均质材料中的含量均在 GB/T 26572 规定的限量要求以下。
×：表示该有害物质至少在该部件的某一均质材料中的含量超出 GB/T 26572 规定的限量要求。
注：表中标记“×”的部件，皆因全球技术发展水平限制而无法实现有害物质的替代。
印刷电路板组件*：包括印刷电路板及其零部件、电容和连接器
根据型号的不同，可能不会含有以上的所有部件，请以实际购买机型为准

在中华人民共和国境内销售的电子信息产品必须标识此标志，标志内的数字代表在正常使用状态下的产品的环保使用期限

Turkish RoHS

The Lenovo product meets the requirements of the Republic of Turkey Directive on the Restriction of the Use of Certain Hazardous Substances in Waste Electrical and Electronic Equipment(WEEE).

© Copyright Lenovo 2014, 2015

Türkiye AEEE Yönetmeliğine Uygunluk Beyanı

Bu Lenovo ürünü, T.C. Çevre ve Orman Bakanlığı'nın “Atık Elektrik ve Elektronik Eşyalarda Bazı Zararlı Maddelerin Kullanımının Sınırlandırılmasına Dair Yönetmelik (AEEE)” direktiflerine uygundur.

AEEE Yönetmeliğine Uygundur.

Ukraine RoHS

Цим підтверджуємо, що продукція Леново відповідає вимогам нормативних актів України, які обмежують вміст небезпечних речовин

India RoHS

RoHS compliant as per E-Waste (Management & Handling) Rules, 2011.

Appendix D. ENERGY STAR model information

ENERGY STAR® is a joint program of the U.S. Environmental Protection Agency and the U.S. Department of Energy aimed at saving money and protecting the environment through energy efficient products and practices.

Lenovo is proud to offer our customers products with an ENERGY STAR compliant designation. Some models of the following machine types have been designed and tested to conform to the ENERGY STAR program requirement for computers at the time of manufacture: 30A6, 30A7, 30A8, and 30A9. For more information about ENERGY STAR ratings for Lenovo computers, go to http://www.lenovo.com.

By using ENERGY STAR compliant products and taking advantage of the power-management features of your computer, you reduce the consumption of electricity. Reduced electrical consumption contributes to potential financial savings, a cleaner environment, and the reduction of greenhouse gas emissions.

For more information about ENERGY STAR, go to:
http://www.energystar.gov

Lenovo encourages you to make efficient use of energy an integral part of your day-to-day operations. To help in this endeavor, set the following power-management features to take effect when your computer has been inactive for a specified duration:

Table 4. ENERGY STAR power-management features

Windows 7, Windows 8.1, or Windows 10 operating system
Power plan: ThinkStation Default • Turn off the display: After 10 minutes • Put the computer to sleep: After 25 minutes • Advanced power settings: – Turn off hard disk drives: After 20 minutes – Hibernate: Never

To awaken your computer from a Sleep mode, press any key on your keyboard. For more information about these settings, refer to your Windows Help and Support information system.

To change power settings, do the following:

1. Open Control Panel by doing one of the following:
   - For Windows 7: Click the Start button to open the Start menu, and then click **Control Panel**.
   - For Windows 8.1: See “Accessing Control Panel on the Windows 8.1 operating system” on page 24.
   - For Windows 10: Right-click the Start button to open the Start context menu, and then click **Control Panel**.
2. View Control Panel using Large icons or Small icons, and then click **Power Options**.

© Copyright Lenovo 2014, 2015

3. Follow the instructions on the screen.

Appendix E. Notices

Lenovo may not offer the products, services, or features discussed in this document in all countries. Consult your local Lenovo representative for information on the products and services currently available in your area. Any reference to a Lenovo product, program, or service is not intended to state or imply that only that Lenovo product, program, or service may be used. Any functionally equivalent product, program, or service that does not infringe any Lenovo intellectual property right may be used instead. However, it is the user's responsibility to evaluate and verify the operation of any other product, program, or service.

Lenovo may have patents or pending patent applications covering subject matter described in this document. The furnishing of this document does not give you any license to these patents. You can send license inquiries, in writing, to:

Lenovo (United States), Inc.
1009 Think Place - Building One
Morrisville, NC 27560
U.S.A.
Attention: Lenovo Director of Licensing

LENOVO PROVIDES THIS PUBLICATION “AS IS” WITHOUT WARRANTY OF ANY KIND, EITHER EXPRESS OR IMPLIED, INCLUDING, BUT NOT LIMITED TO, THE IMPLIED WARRANTIES OF NON-INFRINGEMENT, MERCHANTABILITY OR FITNESS FOR A PARTICULAR PURPOSE. Some jurisdictions do not allow disclaimer of express or implied warranties in certain transactions, therefore, this statement may not apply to you.

This information could include technical inaccuracies or typographical errors. Changes are periodically made to the information herein; these changes will be incorporated in new editions of the publication. Lenovo may make improvements and/or changes in the product(s) and/or the program(s) described in this publication at any time without notice.

The products described in this document are not intended for use in implantation or other life support applications where malfunction may result in injury or death to persons. The information contained in this document does not affect or change Lenovo product specifications or warranties. Nothing in this document shall operate as an express or implied license or indemnity under the intellectual property rights of Lenovo or third parties. All information contained in this document was obtained in specific environments and is presented as an illustration. The result obtained in other operating environments may vary.

Lenovo may use or distribute any of the information you supply in any way it believes appropriate without incurring any obligation to you.

Any references in this publication to non-Lenovo Web sites are provided for convenience only and do not in any manner serve as an endorsement of those Web sites. The materials at those Web sites are not part of the materials for this Lenovo product, and use of those Web sites is at your own risk.

Any performance data contained herein was determined in a controlled environment. Therefore, the result obtained in other operating environments may vary significantly. Some measurements may have been made on development-level systems and there is no guarantee that these measurements will be the same on generally available systems. Furthermore, some measurements may have been estimated through extrapolation. Actual results may vary. Users of this document should verify the applicable data for their specific environment.

© Copyright Lenovo 2014, 2015

Trademarks

The following terms are trademarks of Lenovo in the United States, other countries, or both:

Lenovo
The Lenovo logo
The ThinkStation logo
Rescue and Recovery
ThinkStation
ThinkVantage

Microsoft, Windows, and Windows Media are trademarks of the Microsoft group of companies.

Intel, Thunderbolt, and Xeon are trademarks of Intel Corporation in the U.S. and/or other countries.

Linux is a registered trademark of Linus Torvalds.

DisplayPort and Mini DisplayPort are Trademarks of the Video Electronics Standards Association.

Android is a trademark of Google Inc.

Other company, product, or service names may be trademarks or service marks of others.

Index

2.5-inch, hard disk drive, solid-state drive, replacing 115
2.5-inch, storage drive, replacing 103
3.5-inch, hard disk drive, hybrid drive, replacing 94, 99
3.5-inch, storage drive, replacing 93

A

a rescue medium, creating and using 70
Administrator, password 38
Advance configuration 37
audio features 12
audio line-in connector 4
audio line-out connector 4

B

backup and recovery operations 68
basic troubleshooting 53
battery, replacing 139
BIOS passwords, using 38
BIOS settings, changing 42
boot-block recovery 43

C

cable lock, security 35
changing
  password 38
  startup device sequence 40
cleaning an optical mouse 50
CMOS, clearing 39
components, internal 6
computer cover
  removing 75
computer cover, reinstalling 149
connector 4
connectors
  rear 2
connectors, controls, indicators
  front 2
considerations, passwords 38
creating
  and using a rescue medium 70
creating and using
  recovery media 67
CRU
  completing the installation 149
customer support center 154

D

deleting a password 38
Description 4
device drivers 151
devices, handling static-sensitive 75
diagnostic program 64
diagnostics program, using 154
diagnostics, troubleshooting 53
direct cooling air baffle, removing, installing 76
DisplayPort connector 5
documentation, using 154
drivers, device 151
drives
  bays 10
  specifications 10
DVI monitor connector 5

E

environment, operating 15
Ethernet connector 5
exiting, Setup Utility 41
expansion 13
external options, installing 75

F

failure, recovering from BIOS 43
features 11
flex adapter 137
  installing, replacing 137
  slots 137
front
  connectors, controls, indicators 2
front fan assembly, replacing 92
full-length PCI card 126
  installing, replacing 126
  slots 126

G

getting
  help 153
  information 153
  service 153

H

Hard disk, password 38
hardware diagnostics 64
heat sink and fan assembly, replacing 133
help
  and service 154
  getting 153

I

important safety information v
information

© Copyright Lenovo 2014, 2015

getting 153
important safety v
resources 153
safety 153
warranty 153
Input/Output (I/O) features 12
installing
operating system 42
storage drive 93
super capacitor module 128
installing options
flex adapter 137
full-length PCI card 126
memory module 135
PCI card 121
installing, replacing, internal storage drive 93
internal drives 12
intrusion switch, cover presence switch, replacing 90

K

Kensington-style
cable lock 35
keyboard connector 5
keyboard, replacing 148

L

Lenovo Solution Center 64
Lenovo ThinkVantage Tools 153
locating components 6

M

media, creating and using recovery media 67
memory 11
memory module
installing, replacing 135
system board 135
microphone connector 5
Mini DisplayPort connector 5
mouse connector 5
mouse, replacing 148

N

notices 171

O

operations, backup and recovery 68
optical drive bay 99, 115
optical drive bracket, removing, installing 88
optical drive, replacing 78
optical mouse
cleaning 50

P

parts replacement, completing 149
password
Administrator 38
considerations 38
Hard disk 38
Power-on password 38
setting, changing, deleting 38
passwords
erasing 39
lost or forgotten 39
PCI card 121
installing, replacing 121
slots 121
physical specifications 15
power
features 13
power supply assembly, replacing 120
power-on self-test (POST) 42
Power-on, password 38
programs, updating system 41
purchasing additional services 155

R

rear connectors 2
rear fan assembly, replacing 131
rear Wi-Fi antennas, installing, removing 146
recovering
from a BIOS update failure 43
software 67
recovery
boot-block 43
operations, backup and 68
problems, solving 72
recovery media, creating and using 67
removing computer cover 75
replacing
battery 139
heat sink and fan assembly 133
storage drive 93–94, 99, 103, 115
super capacitor module 128
Rescue and Recovery 67
workspace, Rescue and Recovery 69
Rescue and Recovery workspace 69
resources, information 153

S

safety v
safety information 153
security
enabling or disabling 39
features 14
selecting
startup device 40
temporary startup device 40
serial connector 5
service
and help 154
customer support center 154
getting 153

services
other 155
purchasing additional 155
setting
password 38
settings
changing 37
viewing 37
Setup Utility 37
Setup Utility program, starting 37
Setup Utility, exiting 41
slim optical drive, card reader, eSATA connector, IEEE 1394 connector, replacing 81
software
recovering 67
solving recovery problems 72
starting the Setup Utility program 37
startup device 40
sequence, changing 40
temporary, selecting 40
static-sensitive devices, handling 75
storage drive bay 94
super capacitor module
installing 128
replacing 128
system
management 13
programs 42
system board
connectors 7
locating parts 6
memory module 135

T

temporary startup device 40
trademarks 172
troubleshooting, basic 53
troubleshooting, diagnostics 53

U

updating
system programs 41
USB 2.0 connector 5
USB 3.0 connector 5
using
a rescue medium, creating and 70
BIOS passwords 38
diagnostic program 154
documentation 154
other services 155
Setup Utility 37

V

video features 12
viewing and changing settings 37

W

warranty information 153
Wi-Fi units, Wi-Fi adapter card, Wi-Fi card module, Wi-Fi antenna cable, replacing 141
workspace, backup and recovery 69

© Copyright Lenovo 2014, 2015