EPSON
EXCEED YOUR VISION

# WF-8590 User's Guide

# Contents


**WF-8590 User's Guide ..... 15**

**Product Basics ..... 16**

Using the Control Panel ..... 16

Control Panel Buttons and Lights ..... 17

Status Icon Information ..... 18

Status Button Information ..... 19

Setting a Password and Locking the Control Panel ..... 20

Entering Characters on the LCD Screen ..... 22

Using Presets ..... 22

Setting User Feature Restrictions (Access Control) ..... 24

Changing LCD Screen Language ..... 25

Adjusting Control Panel Sounds ..... 26

Adjusting the Screen Brightness ..... 27

Turning Off the Operation Time Out Setting ..... 28

Product Parts Locations ..... 29

Product Parts - Front ..... 30

Product Parts - Inside ..... 33

Product Parts - Back ..... 35

Using Eco Mode and Other Power Saving Settings ..... 36

Changing the Eco Mode Settings ..... 36

Changing the Sleep Timer Settings ..... 37

Changing the Power Off Timer Settings ..... 38

Epson Connect Solutions for Smartphones, Tablets, and More ..... 39

Using Epson Email Print ..... 39

Using the Epson iPrint Mobile App ..... 40

Using Epson Remote Print ..... 40

Using Epson Scan to Cloud ..... 41

Using AirPrint ..... 41

Using Google Cloud Print ..... 42

Setting Up Google Cloud Print on a Chromebook ..... 43

**Wi-Fi or Wired Networking ..... 45**
Wi-Fi Infrastructure Mode Setup ..... 45
Selecting Wireless Network Settings From the Control Panel ..... 46
Wi-Fi Direct Mode Setup ..... 48
Enabling Wi-Fi Direct Mode ..... 49
Wi-Fi Protected Setup (WPS) ..... 52
Using WPS to Connect to a Network ..... 52
Printing a Network Status Sheet ..... 53
Changing or Updating Network Connections ..... 54
Accessing the Web Config Utility ..... 54
Changing a USB Connection to a Wi-Fi Connection ..... 55
Changing a Wi-Fi Connection to a Wired Network Connection ..... 55
Connecting to a New Wi-Fi Router ..... 55
Configuring Email Server Settings ..... 56
Disabling Wi-Fi Features ..... 57
**Enabling Epson Universal Print Driver (PCL) or PostScript Printing ..... 59**
Selecting PDL (Page Description Language) Settings ..... 59
PDL Print Configuration Options ..... 60
Selecting Printer Language and Interface Settings ..... 63
Printer Language and Interface Options ..... 64
Printing a PS3 (PostScript) Status Sheet ..... 65
**Loading Paper ..... 66**
Loading Paper in the Cassette ..... 66
Loading Paper and Envelopes in the Rear Paper Feed Slot ..... 69
Loading Paper in the Front Paper Feed Slot ..... 73
Paper Loading Capacity ..... 75
Available Epson Papers ..... 77
Paper or Media Type Settings - Printing Software ..... 79
Selecting the Paper Settings for Each Source - Control Panel ..... 80
Paper Type Settings - Control Panel ..... 81
Selecting Default Paper Settings - Administrator ..... 82
Selecting the Default Printer Settings ..... 82
Paper Source Settings Options ..... 84

Setting the Universal Print Settings ..... 84
Universal Print Settings Options ..... 85
Installing the Optional Cabinet and Paper Cassettes ..... 86
Installing the Optional Cabinet ..... 87
Installing the Optional Paper Cassette Units ..... 94
Enabling the Optional Paper Cassettes - Windows ..... 101
Enabling the Optional Paper Cassettes - OS X ..... 102
**Placing Originals on the Product ..... 104**
Placing Originals on the Scanner Glass ..... 104
Placing Originals in the Automatic Document Feeder ..... 105
**Copying ..... 108**
Copying Documents or Photos ..... 108
Copying Options ..... 109
**Printing from a Computer ..... 112**
Printing with Windows ..... 112
Selecting Basic Print Settings - Windows ..... 112
Paper Source Options - Windows ..... 115
Print Quality Options - Windows ..... 115
Multi-Page Printing Options - Windows ..... 116
Selecting Double-sided Printing Settings - Windows ..... 116
Double-sided Printing Options - Windows ..... 119
Print Density Adjustments - Windows ..... 119
Selecting Additional Layout and Print Options - Windows ..... 120
Custom Color Correction Options - Windows ..... 122
Image Options and Additional Settings - Windows ..... 123
Header/Footer Settings - Windows ..... 124
Selecting a Printing Preset - Windows ..... 125
Selecting Extended Settings - Windows ..... 126
Extended Settings - Windows ..... 127
Printing Your Document or Photo - Windows ..... 128
Locking Printer Settings - Windows ..... 129
Administrator Lock Settings ..... 131
Entering a User ID and Password for Printing ..... 132

Selecting Default Print Settings - Windows ... 133
Changing the Language of the Printer Software Screens ... 134
Changing Automatic Update Options ... 135
Printing with OS X ... 136
Selecting Basic Print Settings - OS X ... 137
Paper Source Options - OS X ... 141
Print Quality Options - OS X ... 141
Print Options - OS X ... 142
Selecting Page Setup Settings - OS X ... 142
Selecting Print Layout Options - OS X ... 143
Selecting Double-sided Printing Settings - OS X ... 144
Double-sided Printing Options and Adjustments - OS X ... 145
Managing Color - OS X ... 146
Color Matching and Color Options - OS X ... 147
Selecting Printing Preferences - OS X ... 148
Printing Preferences - OS X ... 149
Printing Your Document or Photo - OS X ... 150
Checking Print Status - OS X ... 150
Printing with the Epson Universal Print Driver - Windows ... 151
Installing the Epson Universal Print Driver - Windows ... 152
Synchronizing Printer Settings - Epson Universal Print Driver - Windows ... 156
Selecting Basic Print Settings - Epson Universal Print Driver - Windows ... 158
Selecting Additional Layout and Print Options - Epson Universal Print Driver - Windows ... 160
Selecting Maintenance Options - Epson Universal Print Driver - Windows ... 162
Extended Settings - Epson Universal Print Driver - Windows ... 163
Selecting Default Print Settings - Epson Universal Print Driver - Windows ... 164
Locking Printer Settings - Epson Universal Print Driver - Windows ... 166
Epson Universal Print Driver Lock Settings ... 168
Adding Network Printers - Epson Universal Print Driver - Windows ... 169
Printing with the PostScript (PS3) Printer Software - Windows ... 172
Installing the PostScript (PS3) Printer Software - Windows ... 172
Enabling the Optional Paper Cassettes - PostScript Printer Software - Windows ... 172
Selecting Basic Print Settings - PostScript Printer Software - Windows ... 174

Selecting Additional Layout and Print Options - PostScript Printer Software - Windows ..... 177
Selecting Default Print Settings - PostScript Printer Software - Windows ..... 178
Printing with the PostScript (PS3) Printer Software - OS X ..... 179
Installing the PostScript (PS3) Printer Software - OS X ..... 180
Enabling the Optional Paper Cassettes - PostScript Printer Software - OS X ..... 180
Selecting Basic Print Settings - PostScript Printer Software - OS X ..... 181
Selecting Page Setup Settings - PostScript Printer Software - OS X ..... 187
Selecting Print Layout Options - PostScript Printer Software - OS X ..... 188
Sizing Printed Images - PostScript Printer Software - OS X ..... 189
Managing Color - PostScript Printer Software - OS X ..... 189
Printing Your Document or Photo - PostScript Printer Software - OS X ..... 190
Checking Print Status - PostScript Printer Software - OS X ..... 190
Cancelling Printing Using a Product Button ..... 191
**Scanning ..... 192**
Starting a Scan ..... 192
Starting a Scan Using the Product Control Panel ..... 192
Scanning to Email ..... 194
Scanning to a Network Folder or FTP Server ..... 196
Control Panel Scanning Options ..... 198
Creating Contacts for Scanning ..... 200
Adding and Assigning Scan Jobs ..... 202
Starting a Scan with Document Capture Pro or Document Capture ..... 203
Starting a Scan Using the Epson Scan Icon ..... 206
Starting a Scan from a Scanning Program ..... 208
Selecting Epson Scan Settings ..... 210
Scan Modes ..... 210
Selecting the Scan Mode ..... 211
Scanning in Office Mode ..... 211
Available Document Source Settings - Office Mode ..... 214
Selecting a Scan Area - Office Mode ..... 214
Available Image Adjustments - Office Mode ..... 217
Scanning in Professional Mode ..... 218
Available Document Source Settings - Professional Mode ..... 221

Available Image Types - Professional Mode ... 221
Selecting a Scan Area - Professional Mode ... 222
Available Image Adjustments - Professional Mode ... 225
Selecting a Scan Size - Professional Mode ... 227
Image Preview Guidelines ... 230
Scan Resolution Guidelines ... 230
Selecting Scan File Settings ... 232
Available Scanned File Types and Optional Settings ... 234
Scanning with OS X Using Image Capture ... 235
Available Scan Settings - OS X Image Capture ... 237
Scanning Special Projects ... 238
Scanning to a SharePoint Server or Cloud Service ... 238
Scanning Multi-Page Originals as Separate Files ... 240
Entering a User ID and Password for Scanning - Windows ... 241
**Faxing ... 243**
Connecting a Telephone or Answering Machine ... 243
Setting Up Fax Features ... 249
Setting Up Basic Fax Features ... 249
Selecting Your Country or Region ... 249
Selecting the Date and Time ... 251
Using the Fax Setup Wizard ... 253
Selecting the Line Type ... 255
Setting the Number of Rings to Answer ... 257
Selecting Advanced Fax Settings ... 259
User Default Settings - Fax ... 261
Send Settings - Fax ... 262
Receive Settings - Fax ... 262
Output Settings - Fax ... 263
Basic Settings - Fax ... 265
Security Settings - Fax ... 266
Setting Up Fax Features Using the Fax Utility - Windows ... 267
Setting Up Fax Features Using the Fax Utility - OS X ... 268
Setting Up Contacts and Contact Groups ... 269

Setting Up Contacts Using the Product Control Panel ... 270
Creating a Contact ... 270
Editing or Deleting a Contact ... 272
Creating a Contact Group ... 273
Editing or Deleting a Contact Group ... 275
Setting Up Speed/Group Dial Lists Using the Fax Utility - Windows ... 277
Setting Up Speed/Group Dial Lists Using the Fax Utility - OS X ... 281
Sending Faxes ... 283
Sending Faxes from the Product Control Panel ... 283
Sending a Fax Using the Keypad, Contact List, or History ... 283
Fax Sending Options ... 285
Sending a Fax at a Specified Time ... 287
Sending a Fax on Demand ... 288
Sending a Stored Fax ... 289
Dialing Fax Numbers from a Connected Telephone ... 291
Sending Faxes Using the Fax Utility - Windows ... 292
Sending Faxes Using the Fax Utility - OS X ... 294
Receiving Faxes ... 297
Fax Reception ... 297
Receiving Faxes Automatically ... 298
Receiving Faxes Manually ... 298
Forwarding Received Faxes ... 299
Receiving a Fax by Polling ... 301
Viewing a Fax on the LCD Screen ... 301
Checking Fax Status ... 302
Printing Fax Reports ... 303
Fax Report Options ... 303
**Using USB Flash Drives With Your Product ... 305**
Inserting a USB Flash Drive ... 305
USB Device Photo File Specifications ... 305
Removing a USB Flash Drive ... 306
Viewing and Printing From the LCD Screen ... 306
Printing JPEG Photos ... 306

Printing TIFF and PDF Files ..... 308
Photo Adjustment Options - Device Mode ..... 308
Print Setting Options - Device Mode ..... 309
Transferring Files on a USB Flash Drive ..... 310
Setting Up File Sharing for File Transfers From Your Computer ..... 310
Transferring Files from a USB Flash Drive to Your Computer ..... 311
**Replacing Ink Cartridges and Maintenance Boxes ..... 313**
Check Cartridge and Maintenance Box Status ..... 313
Checking Cartridge Status on the LCD Screen ..... 313
Checking Cartridge and Maintenance Box Status with Windows ..... 314
Checking Cartridge and Maintenance Box Status with OS X ..... 317
Purchase Epson Ink Cartridges and Maintenance Box ..... 319
Ink Cartridge and Maintenance Box Part Numbers ..... 319
Removing and Installing Ink Cartridges ..... 320
Printing with Black Ink and Expended Color Cartridges ..... 323
Printing with Expended Color Cartridges - Windows ..... 323
Printing with Expended Color Cartridges - OS X ..... 324
Conserving Low Black Ink with Windows ..... 326
Replacing the Maintenance Box ..... 326
**Adjusting Print Quality ..... 329**
Print Head Maintenance ..... 329
Print Head Nozzle Check ..... 329
Checking the Nozzles Using the Product Control Panel ..... 330
Checking the Nozzles Using a Computer Utility ..... 332
Print Head Cleaning ..... 333
Cleaning the Print Head Using the Product Control Panel ..... 334
Cleaning the Print Head Using a Computer Utility ..... 335
Print Head Alignment ..... 337
Aligning the Print Head Using the Product Control Panel ..... 337
Aligning the Print Head Using a Computer Utility ..... 339
Cleaning the Paper Guide ..... 341
**Cleaning and Transporting Your Product ..... 343**
Cleaning Your Product ..... 343

Transporting Your Product ... 346
**Solving Problems ... 348**
Checking for Software Updates ... 348
Product Status Messages ... 349
Status Menu Error Codes ... 350
Running a Product Check ... 354
Resetting Control Panel Defaults ... 356
Solving Setup Problems ... 357
Product Does Not Turn On or Off ... 357
Noise After Ink Installation ... 357
Software Installation Problems ... 358
Solving Network Problems ... 358
Product Cannot Connect to a Wireless Router or Access Point ... 359
Network Software Cannot Find Product on a Network ... 360
Product Does Not Appear in OS X Printer Window ... 361
Cannot Print Over a Network ... 361
Cannot Scan Over a Network ... 363
Solving Copying Problems ... 364
Product Makes Noise, But Nothing Copies ... 364
Product Makes Noise When It Sits for a While ... 364
Originals Do Not Feed From the Automatic Document Feeder ... 364
Solving Paper Problems ... 365
Paper Feeding Problems ... 365
Paper Jam Problems in the Front Cover (A) ... 367
Paper Jam Problems in the Rear Paper Feed Slot (B1) ... 368
Paper Jam Problems in the Front Paper Feed Slot (B2) ... 368
Paper Jam Problems in the Cassette (C1/C2/C3/C4) ... 371
Paper Jam Problems in the Rear Cover 1 (D1) ... 372
Paper Jam Problems in the Rear Cover (E) of the Optional Paper Cassette Unit ... 375
Document Jams in the Automatic Document Feeder (F) ... 377
Paper Ejection Problems ... 381
Solving PostScript Printing Problems ... 381
Nothing Prints Using the Postscript Printing Software ... 381

Documents Print Incorrectly Using the Postscript Printing Software ... 382
Accessing Printer Properties - Postscript - Windows ... 382
Solving Problems Printing from a Computer ... 383
Nothing Prints ... 383
Product Icon Does Not Appear in Windows Taskbar ... 384
Printing is Slow ... 385
Solving Page Layout and Content Problems ... 386
Inverted Image ... 386
Too Many Copies Print ... 387
Blank Pages Print ... 387
Incorrect Margins on Printout ... 388
Incorrect Characters Print ... 388
Incorrect Image Size or Position ... 388
Slanted Printout ... 389
Solving Print Quality Problems ... 389
White or Dark Lines in Printout ... 390
Blurry or Smeared Printout ... 391
Faint Printout or Printout Has Gaps ... 392
Grainy Printout ... 393
Incorrect Colors ... 394
Solving Scanning Problems ... 395
Scanning Software Does Not Operate Correctly ... 395
Cannot Start Epson Scan ... 396
Solving Scanned Image Quality Problems ... 396
Image Consists of a Few Dots Only ... 397
Line of Dots Appears in All Scanned Images ... 397
Straight Lines in an Image Appear Crooked ... 398
Image is Distorted or Blurry ... 398
Image Colors are Patchy at the Edges ... 398
Image is Too Dark ... 398
Back of Original Image Appears in Scanned Image ... 399
Ripple Patterns Appear in an Image ... 399
Scanned Image Colors Do Not Match Original Colors ... 399

Scan Area is Not Adjustable in Thumbnail Preview ..... 400
Scanned Image Edges are Cropped ..... 400
Solving Faxing Problems ..... 400
Cannot Send or Receive Faxes ..... 401
Cannot Receive Faxes with a Telephone Connected to Your Product ..... 402
Fax Memory Full Error Appears ..... 403
Sent Fax Quality is Poor ..... 403
Sent Fax is Received in an Incorrect Size ..... 404
Received Fax Quality is Poor ..... 405
Received Fax is Not Printed ..... 405
Solving USB Flash Drive Problems ..... 405
Cannot View or Print from a USB Flash Drive ..... 405
Cannot Save Files on a USB Flash Drive ..... 406
Cannot Transfer Files To or From a USB Flash Drive ..... 406
When to Uninstall Your Product Software ..... 407
Uninstalling Product Software - Windows ..... 407
Uninstalling Product Software - OS X ..... 408
Where to Get Help ..... 409
**Technical Specifications ..... 410**
Windows System Requirements ..... 410
OS X System Requirements ..... 411
Scanning Specifications ..... 411
Automatic Document Feeder (ADF) Specifications ..... 412
Fax Specifications ..... 412
Paper Specifications ..... 413
Printable Area Specifications ..... 415
Ink Cartridge Specifications ..... 416
Dimension Specifications ..... 416
Electrical Specifications ..... 417
Environmental Specifications ..... 418
Interface Specifications ..... 418
External USB Device Specifications ..... 419
Network Interface Specifications ..... 419

Safety and Approvals Specifications ..... 420
PS3 Mode Fonts ..... 421
PCL5 Mode Fonts ..... 423
PCL6 Mode Fonts ..... 425
Symbol Sets ..... 427
**Notices ..... 436**
General Product Safety Instructions ..... 436
Ink Cartridge Safety Instructions ..... 438
LCD Screen Safety Instructions ..... 439
Wireless Connection Safety Instructions ..... 439
Telephone Equipment Safety Instructions ..... 439
Cabinet Safety Instructions ..... 440
FCC Compliance Statement ..... 440
Software Notice ..... 443
Trademarks ..... 491
Copyright Notice ..... 491
libTIFF Software Acknowledgment ..... 492
A Note Concerning Responsible Use of Copyrighted Materials ..... 493
Default Delay Times for Power Management for Epson Products ..... 493
Copyright Attribution ..... 493

# WF-8590 User's Guide

Welcome to the WF-8590 *User's Guide*.

For a printable PDF copy of this guide, click here.

# Product Basics

See these sections to learn about the basic features of your product.

Using the Control Panel
Product Parts Locations
Using Eco Mode and Other Power Saving Settings
Epson Connect Solutions for Smartphones, Tablets, and More
Using AirPrint
Using Google Cloud Print

## Using the Control Panel

See these sections to learn about the control panel and select control panel settings.

Control Panel Buttons and Lights
Setting a Password and Locking the Control Panel
Setting User Feature Restrictions (Access Control)
Changing LCD Screen Language
Adjusting Control Panel Sounds
Adjusting the Screen Brightness
Turning Off the Operation Time Out Setting

**Parent topic:** Product Basics

## Control Panel Buttons and Lights

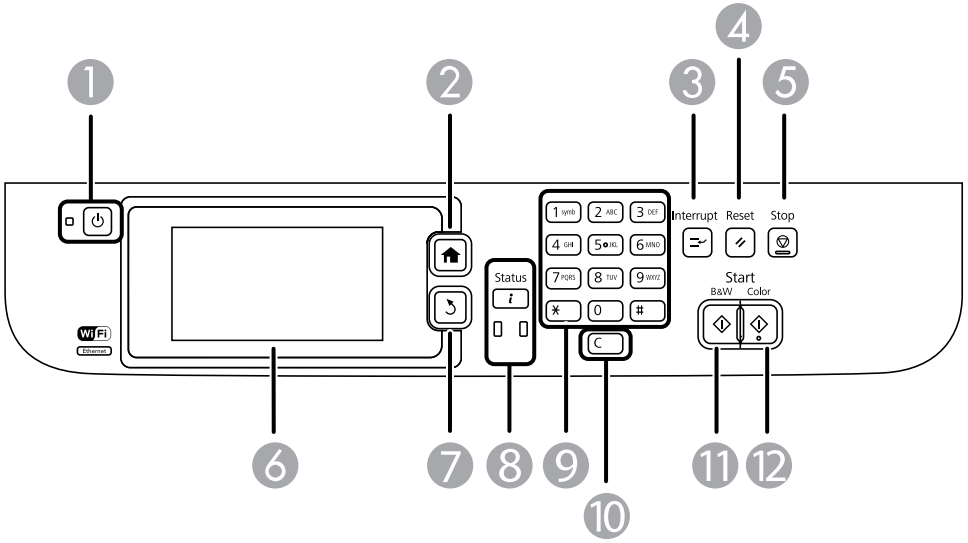


1 The power button and light
2 The home button
3 The **Interrupt** button
4 The **Reset** button
5 The **Stop** button
6 The LCD screen
7 The back button
8 The **Status** button and lights
9 The numeric keypad
10 The **C** clear button
11 The **B&W** button
12 The **Color** button

Status Icon Information
Status Button Information
**Parent topic:** Using the Control Panel

## Status Icon Information

Your product may display status icons on the LCD screen for certain product status conditions. Press to view or change the current network settings.

| Icons | Description |
|---|---|
| | Displays additional information or instructions, such as on loading paper or placing a document. |
| | A document is in the Automatic Document Feeder (ADF). |
| | One or more of the ink cartridges are running low on ink or the maintenance box is nearly full.<br>Press the **Status** button to open the Status Menu, select **Printer Information**, and check the status of the consumables. |
| | One or more of the ink cartridges are expended or the maintenance box is full.<br>Press the **Status** button to open the Status Menu, select **Printer Information**, and check the status of the consumables. |
| | Unread or unprinted fax data is stored in the product. If you have set up the product to save received faxes on a computer or external storage device, this icon may also indicate that received faxes have not been saved on the computer or storage device. |
| | Fax memory usage. |
| | Fax memory is full. Delete received faxes you have already read or printed. If you have set up the product to save received faxes on a computer or external storage device, turn on the computer or connect the storage device to the product. |
| | A Wi-Fi or an Ethernet connection is being processed. |
| | No Ethernet connection. |
| | An Ethernet connection has been established. |

| Icons | Description |
|---|---|
| | No Wi-Fi connection. |
| | A Wi-Fi network error has occurred or the product is searching for a connection. |
| | A Wi-Fi connection has been established. The number of bars indicates the connection's signal strength. |
| | An Ad hoc connection has been established. |
| | A Wi-Fi Direct mode connection has been established. |
| | A Simple AP mode connection has been established. |
| | Access to the product's functions are restricted to authorized users. Press the icon to log in to the printer. (You need to enter a user name and password.) Contact your administrator if you do not know the login information. |
| | Access to the product's functions are restricted to authorized users and a user is currently logged in. Press the icon to log out. |

**Parent topic:** Control Panel Buttons and Lights

### Status Button Information

Press the **Status** button on the control panel to view the current product and job status.

| Function | Description |
|---|---|
| Printer Information | Displays the status of consumables and any errors that have occurred with the product. Select the error from the list to display the error message. |
| Job Monitor | Displays the current job and any jobs waiting to be processed. |
| Job History | Displays the job history and any error codes for failed jobs in the history. |
| Job Storage | Select **Inbox** to display received faxes stored in the product's history. |

| Function | Description |
| --- | --- |
| Confidential Job | Displays jobs that require a password to print. |

**Parent topic:** Control Panel Buttons and Lights

## Setting a Password and Locking the Control Panel

You can set an administrator password to lock the following settings and prevent them from being changed:

- System Administration Setup settings
- Eco mode settings
- Presets
- Contacts

**Note:** For more information on administration settings, see the *Administrator's Guide*.

1. Press the home button, if necessary.
2. Select **Setup**.

   You see a screen like this:

3. Scroll down and select **Admin Settings**.
4. Select **Admin Password**.
5. Select **Register**.

You see a screen like this:

6. Use the displayed keyboard to enter a password, and press .
7. Enter your password again to confirm.
8. Select **OK**.
9. Select **Lock Setting** and select **On**.

When the control panel is locked, you must enter the password to access any of the locked settings.

**Note:** If you forget your password, contact Epson for assistance.

Entering Characters on the LCD Screen
Using Presets

**Parent topic:** Using the Control Panel

**Related tasks**
Setting User Feature Restrictions (Access Control)

### Entering Characters on the LCD Screen

Follow these guidelines to enter characters for passwords and other settings.

- To move the cursor, select ◄ or ►.
- To change the case of letters, select ⇧.
- To delete the previous character, select ⌫.
- To enter numbers or symbols, select 123#.
- To enter a space, select ␣.

**Parent topic:** Setting a Password and Locking the Control Panel

### Using Presets

You can save frequently used copy, fax, and scan settings as presets. This lets you easily reuse them whenever necessary.

**Note:** Presets can be locked by an administrator. If you cannot access or change presets, contact your administrator for assistance.

1. Press the ⌂ home button, if necessary.
2. Select **Presets**. Enter the Administrator password, if necessary.

You see a screen like this:

3. Select **Add New**.
4. Select the function for which you want to set up a preset.
   You see the main screen for that function, such as the Copy screen:

5. Select the settings you want to save and select **Save**.

You see a screen like this:

6. Use the displayed keyboard to enter a name for the preset and press .
7. Select **Save**.

When you copy, fax, or scan, you can use the preset by selecting **Presets** and selecting your preset from the list.

**Parent topic:** Setting a Password and Locking the Control Panel

**Related tasks**

Entering Characters on the LCD Screen

## Setting User Feature Restrictions (Access Control)

Using Web Config Access Control Settings, you can restrict product features for individual users to prevent misuse of the product. Restricted features require the user to enter an ID and password on the product control panel.

After feature restrictions have been set up in Web Config, you must enable them using the product control panel.

**Note:** For more information on administration settings, see the *Administrator's Guide*.

1. Press the home button, if necessary.
2. Select **Setup**.

You see a screen like this:

3. Scroll down and select **System Administration**.
4. Scroll down and select **Security Settings**.
5. Select **Access Control**.
6. Select **On**.
7. Select whether to allow **Jobs Without Authentication**.

**Parent topic:** Using the Control Panel

**Related tasks**

Setting a Password and Locking the Control Panel
Entering a User ID and Password for Printing
Entering a User ID and Password for Scanning - Windows

## Changing LCD Screen Language

You can change the language used on the LCD screen.

**Note:** This setting can be locked by an administrator. If you cannot access or change this setting, contact your administrator for assistance.

1. Press the home button, if necessary.
2. Select **Setup**.

You see a screen like this:

3. Scroll down and select **System Administration**.
4. Select **Common Settings**.
5. Scroll down and select **Language**.
6. Select a language.

**Parent topic:** Using the Control Panel

## Adjusting Control Panel Sounds

You can adjust the sound level heard when you press buttons on the control panel.

**Note:** This setting can be locked by an administrator. If you cannot access or change this setting, contact your administrator for assistance.

1. Press the home button, if necessary.
2. Select **Setup**.

You see a screen like this:

3. Scroll down and select **System Administration**.
4. Select **Common Settings**.
5. Select **Sound**.
6. Select **Button Press**.
7. Press to decrease or to increase the sound.
8. Select **OK** to exit.

**Note:** You can also adjust the **Sound Type** and the sound level for various product functions.

**Parent topic:** Using the Control Panel

## Adjusting the Screen Brightness

You can adjust the brightness of the LCD screen.

1. Press the home button, if necessary.
2. Select **Setup**.

You see a screen like this:

3. Scroll down and select **System Administration**.
4. Select **Common Settings**.
5. Select **LCD Brightness**.
6. Adjust the screen brightness by selecting a brightness level or by pressing the left or right arrow button.
7. Select **OK** to exit.

**Parent topic:** Using the Control Panel

## Turning Off the Operation Time Out Setting

The Operation Time Out setting causes the LCD screen to return to the Home screen after a few minutes of inactivity. This feature is enabled by default, but you can turn it off.

**Note:** This setting can be locked by an administrator. If you cannot access or change this setting, contact your administrator for assistance.

1. Press the home button, if necessary.
2. Select **Setup**.

You see a screen like this:

3. Scroll down and select **System Administration**.
4. Select **Common Settings**.
5. Scroll down and select **Operation Time Out**.
6. Select **Off**.

**Parent topic:** Using the Control Panel

# Product Parts Locations

See these sections to identify the parts on your product.

Product Parts - Front
Product Parts - Inside
Product Parts - Back

**Parent topic:** Product Basics

## Product Parts - Front

Certain parts are labeled with a letter and number code. If you encounter any paper jams or errors, use these codes to locate and correct the problem.

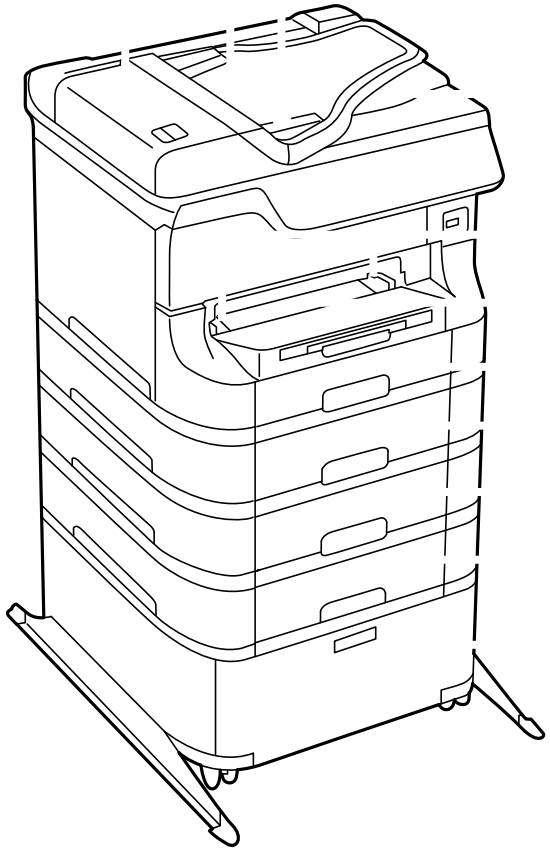

1 ADF cover (F)

2 ADF input tray (F)

3 Edge guide
4 ADF output tray
5 Edge guides
6 Front paper feed slot (B2)
7 Paper cassette 1 (C1)
8 Optional cassettes 2 to 4 (C2 to C4)
9 Optional cabinet

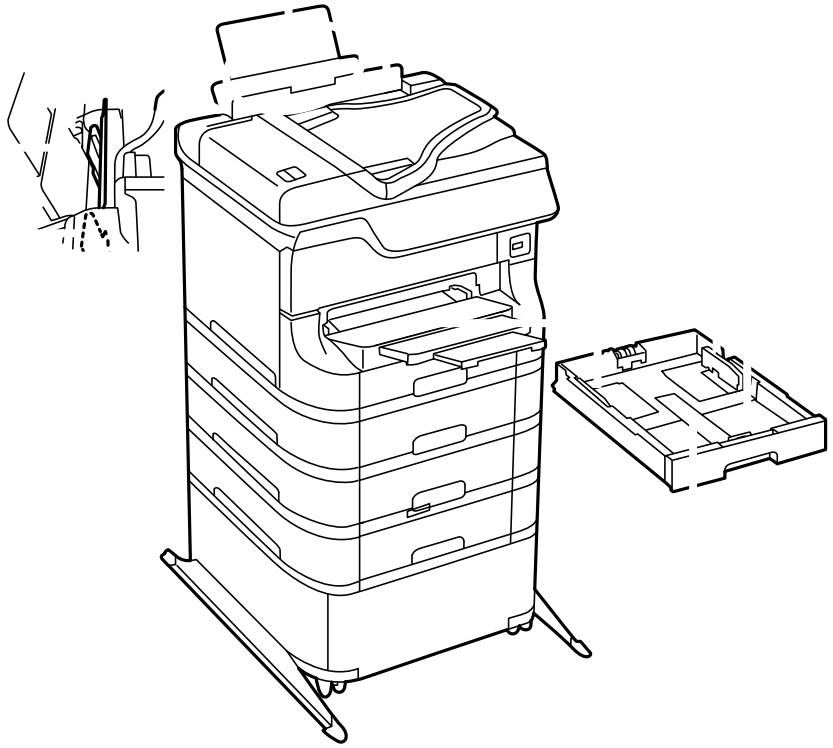

1 Edge guides

2 Paper support
3 Rear paper feed slot (B1)
4 Feeder guard
5 Output tray
6 Edge guides
7 Paper cassette

**Parent topic:** Product Parts Locations

## Product Parts - Inside

Certain parts are labeled with a letter and number code. If you encounter any paper jams or errors, use these codes to locate and correct the problem.

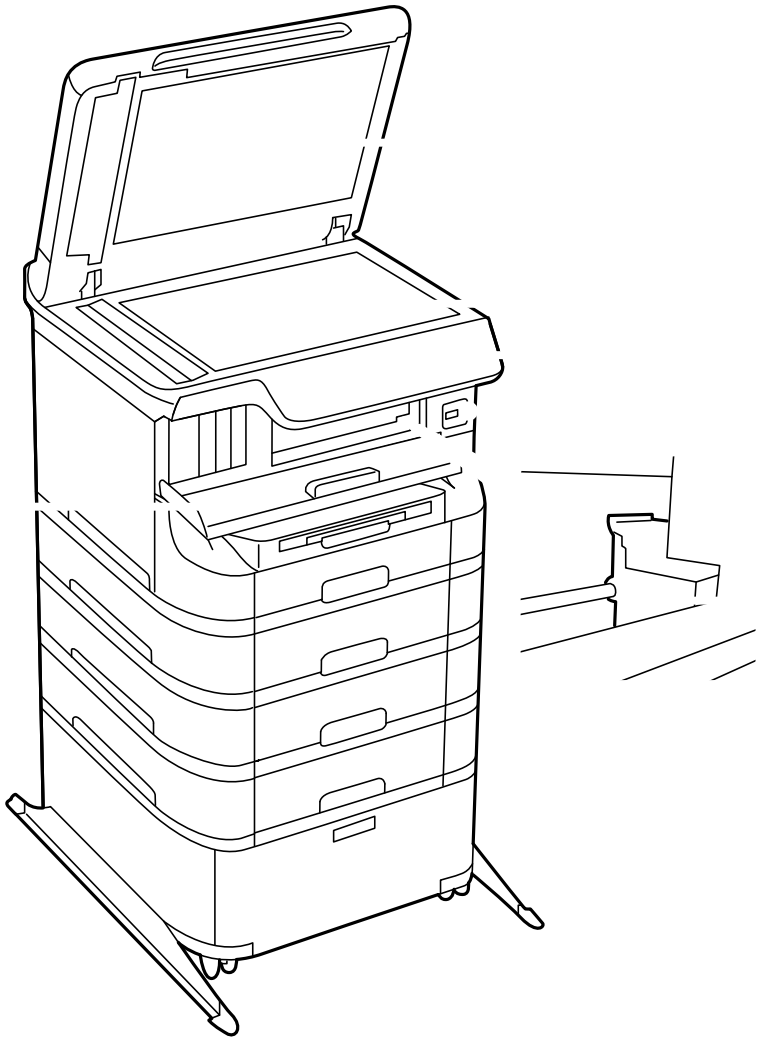

1 Document cover

2 Scanner glass
3 Control panel
4 USB Type A port for external devices
5 Print head
6 Front cover (A)

**Parent topic:** Product Parts Locations

## Product Parts - Back

Certain parts are labeled with a letter and number code. If you encounter any paper jams or errors, use these codes to locate and correct the problem.

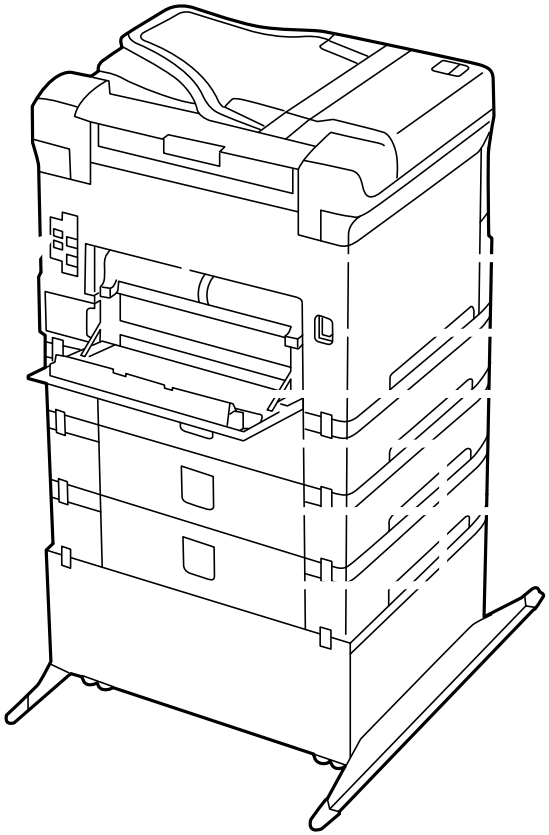

1 Rear cover 2 (D2)

2 AC inlet

3 Rear cover 1 (D1)

4 Rear cover (E)

5 Service USB port (do not remove sticker)

6 **Line** port

7 **EXT** port

8 **LAN** port

9 **USB** port

**Parent topic:** Product Parts Locations

# Using Eco Mode and Other Power Saving Settings

Your product enters sleep mode automatically and turns off the LCD screen if it is not used for a period of time. You can make the time period shorter and select other options to save energy and resources.

Changing the Eco Mode Settings

Changing the Sleep Timer Settings

Changing the Power Off Timer Settings

**Parent topic:** Product Basics

## Changing the Eco Mode Settings

You can use the product's control panel to change the Eco Mode settings.

**Note:** The Sleep Timer setting in Eco Mode overrides the Sleep Timer setting in the Common Settings menu. If you turn on Eco Mode, 2-sided copying is selected by default. The Eco Mode setting can be locked by an administrator. If you cannot access or change this setting, contact your administrator for assistance.

1. Press the home button, if necessary.
2. Select **Eco Mode**. Enter the administrator password, if necessary.

You see a screen like this:

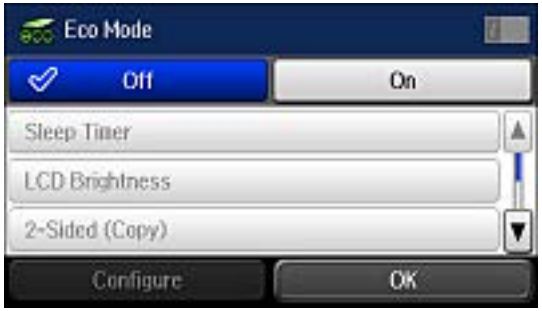


3. Select **On**.
4. Select **Configure**.
5. Change any settings as necessary.
6. Select **OK** to exit.

**Parent topic:** Using Eco Mode and Other Power Saving Settings

**Related tasks**

Changing the Sleep Timer Settings

## Changing the Sleep Timer Settings

You can adjust the time period before your product enters sleep mode and turns off the LCD screen.

**Note:** This setting can be locked by an administrator. If you cannot access or change this setting, contact your administrator for assistance. The Sleep Timer setting in Eco Mode overrides this Sleep Timer setting.

1. Press the home button, if necessary.
2. Select **Setup**.
3. Scroll down and select **System Administration**. Enter the administrator password, if necessary.
4. Select **Common Settings**.
5. Select **Sleep Timer**.

You see a screen like this:

6. Do one of the following:
   - Press the **–** or **+** icons to reduce or increase the number of minutes.
   - Press the number of minutes on the LCD screen, select the number of minutes from the on-screen keypad, and press .
7. Select **OK**.

**Parent topic:** Using Eco Mode and Other Power Saving Settings

**Related tasks**

Changing the Eco Mode Settings

## Changing the Power Off Timer Settings

You can have the product turn off automatically if it is not used for a specified period of time.

**Note:** This setting can be locked by an administrator. If you cannot access or change this setting, contact your administrator for assistance.

1. Press the home button, if necessary.
2. Select **Setup**.

You see a screen like this:

3. Scroll down and select **System Administration**. Enter the administrator password, if necessary.
4. Select **Common Settings**.
5. Select **Power Off Timer**.
6. Select a time period between **30minutes** and **12h** (12 hours).

**Parent topic:** Using Eco Mode and Other Power Saving Settings

# Epson Connect Solutions for Smartphones, Tablets, and More

You can print documents, photos, emails, and web pages from your home, office, or even across the globe. You can use your smartphone, tablet, or computer. Epson offers these solutions to print from anywhere: Epson Email Print, Epson iPrint Mobile App, Epson Remote Print, and Epson Scan to Cloud.

Using Epson Email Print
Using the Epson iPrint Mobile App
Using Epson Remote Print
Using Epson Scan to Cloud

**Parent topic:** Product Basics

## Using Epson Email Print

With Epson Email Print, you can print from any device that can send email, such as your smartphone, tablet, or laptop. Just activate your product's unique email address. When you want to print, attach a PDF, Microsoft Office document, or photo to an email and send it to your product.

1. Set up your product for network printing as described in this manual. See the link below.

2. If you did not already set up Email Print when you installed your product software, visit epson.com/connect to learn more about Email Print, check compatibility, and get detailed setup instructions.
3. Send an email with attachments to your product's Email Print address.

   **Note:** Both the email and any attachments print by default. You can change these printing options by logging into your Epson Connect account.

**Parent topic:** Epson Connect Solutions for Smartphones, Tablets, and More

**Related topics**

Wi-Fi or Wired Networking

## Using the Epson iPrint Mobile App

Use this free Apple and Android app to print to nearby Epson networked products. The Epson iPrint Mobile App lets you print PDFs, Microsoft Office documents, photos, and web pages over a wireless network. You can even scan and save a file on your device, send it as an email, or upload it to an online service such as Box, Dropbox, Evernote, or Google Drive.

1. Set up your product on a network as described in this manual. See the link below.
2. Visit epson.com/connect to learn more about Epson iPrint and check the compatibility of your mobile device.
3. Download Epson iPrint from the Apple App Store or Google Play.
4. Connect your mobile device to the same wireless network that your product is using.
5. Print from your mobile device to your Epson product.

**Parent topic:** Epson Connect Solutions for Smartphones, Tablets, and More

**Related topics**

Wi-Fi or Wired Networking

## Using Epson Remote Print

With Epson Remote Print software on your Windows computer or laptop, you can print to an Epson Email-enabled product anywhere in the world.

1. Set up your product for network printing as described in this manual. See the link below.
2. Visit epson.com/connect to learn more about Remote Print and how to download the software.
3. Download and install the Remote Print software.

4. Obtain the email address and optional access key of the Epson product you want to use for printing, and enter this address during Remote Print setup.
5. Select the print command in your application and choose the Remote Print driver for your Epson product.

**Parent topic:** Epson Connect Solutions for Smartphones, Tablets, and More

**Related topics**

Wi-Fi or Wired Networking

## Using Epson Scan to Cloud

The Epson Scan to Cloud service sends your scanned files to a destination that you have registered with Epson Connect.

1. Set up your product for network scanning as described in this manual. See the link below.
2. Visit epson.com/connect for instructions on registering an account and your product with Epson Connect.
3. After registering, sign in to the Epson Connect web page with the email address and password you selected.
4. Select **Destination List** for Scan to Cloud.
5. Click **Add**, then follow the instructions on the screen to create your destination list.
6. When you're ready to scan, select the setting for the Scan to Cloud service on your product control panel.

**Parent topic:** Epson Connect Solutions for Smartphones, Tablets, and More

**Related topics**

Wi-Fi or Wired Networking

# Using AirPrint

AirPrint allows you to wirelessly print to your AirPrint-enabled product from your iOS device running the latest version of iOS, and from your Mac running OS X 10.7 or later.

1. Set up your product for wireless printing as described in this manual. See the link below.
2. Connect your Apple device to the same wireless network that your product is using.
3. Print from your device to your product.

**Note:** For details, see the AirPrint page on the Apple website.

**Parent topic:** Product Basics

**Related topics**
Wi-Fi or Wired Networking

## Using Google Cloud Print

With a Google Account, you can print from your Apple or Android device to your Epson product. You can also print from Chromebooks and the Google Chrome browser without drivers or cables.

Set up your Epson product for network printing as described in this manual. See the link below.

**Note:** Make sure your Epson printer and computer are connected to the same network before starting the Google Cloud Print setup.

1. Connect your device to the same network that your Epson product is using.
2. Print a network status sheet.
3. Locate your product's IP address on the network status sheet.
4. Enter the IP address into the address bar of a web browser.
5. Select the **Google Cloud Print Services** option.

   **Note:** If you don't see the **Google Cloud Print Services** option, turn your product off and back on. If the option still doesn't appear, select the **Firmware Update** option and follow the on-screen instructions to update your product.

6. Click **Register**.
7. Select the checkbox to agree to the Usage Advisory and click **Next**.
8. Click **OK** to launch the sign-in page.

   A separate browser window opens.

9. Enter your Google Account username and password and click **Sign in**, or, if you don't have an account, click **Sign up for a new Google Account** and follow the on-screen instructions.
10. Click **Finish printer registration** to complete setup and print a test page.

    Your product is now linked to your Google Account and can be accessed from any Chromebook, computer, Apple or Android device with Internet access. Visit Epson Support for more information on using Google Cloud Print, or the Google Cloud Print website for a list of supported apps.

Setting Up Google Cloud Print on a Chromebook

**Parent topic:** Product Basics

**Related topics**

Wi-Fi or Wired Networking

## Setting Up Google Cloud Print on a Chromebook

With a Google Account, you can print from a Chromebook without drivers or cables.

Set up your Epson product for network printing as described in this manual. See the link below.

**Note:** Make sure your Epson product is connected to your wireless network before starting the Google Cloud Print setup.

1. Turn on your Chromebook and connect it to the same wireless network as your product.

   **Note:** See your Chromebook's documentation for details on connecting to a network.

2. Do one of the following:
   - Click **Add to Cloud Print** in the notification that appears in the corner of your Chromebook screen.

     **Note:** If you do not see a notification, check to see if a number appears in the status area at the lower-right corner of the screen. Click this number to open the notifications menu, then click **Add to Cloud Print**.

   - Open a web browser and enter **chrome://devices** in the address bar. Skip to step 4.
3. Click **Add Device**.
4. Click the **Register** button that appears next to your product.

5. Click **Register** on the confirmation screen. Your product's LCD screen displays a confirmation message.
6. Select **OK** or press the **OK** button on your product to confirm the Google Cloud Print connection and print a test page.

   Your product is now linked to your Google Account and can be accessed from any Chromebook, iPhone, or Android phone with Internet access. For more information on using Google Cloud Print, visit Epson Support.

**Parent topic:** Using Google Cloud Print

**Related topics**

Wi-Fi or Wired Networking

# Wi-Fi or Wired Networking

See these sections to use your product on a Wi-Fi or wired network.


Wi-Fi Infrastructure Mode Setup
Wi-Fi Direct Mode Setup
Wi-Fi Protected Setup (WPS)
Printing a Network Status Sheet
Changing or Updating Network Connections


## Wi-Fi Infrastructure Mode Setup

You can set up your product to communicate with your computer using a wireless router or access point. The wireless router or access point can be connected to your computer over a wireless or wired network.

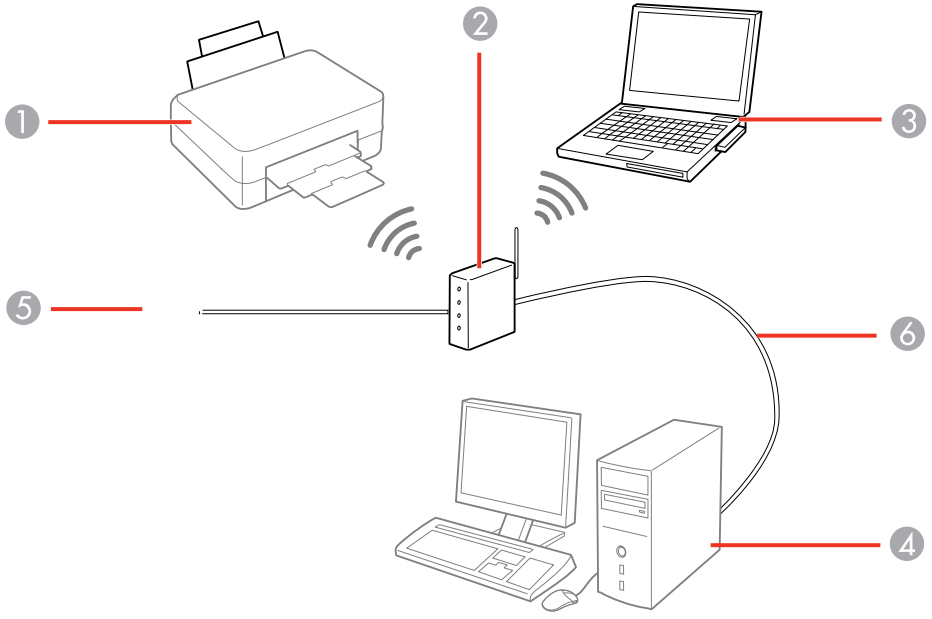


1 Epson product
2 Wireless router or access point

3 Computer with a wireless interface

4 Computer

5 Internet

6 Ethernet cable (used only for wired connection to the wireless router or access point)

Selecting Wireless Network Settings From the Control Panel

**Parent topic:** Wi-Fi or Wired Networking

## Selecting Wireless Network Settings From the Control Panel

You can select or change wireless network settings using your product control panel.

To install your product on a wireless network, follow the instructions on the *Start Here* sheet and install the necessary software by downloading it from the Epson website. The installer program guides you through network setup.

**Note:** Breakdown or repair of this product may cause loss of fax and network data and settings. Epson is not responsible for backing up or recovering data and settings during or after the warranty period. We recommend that you make your own backup or print out your fax and network data and settings.

1. Press the home button, if necessary.
2. Press .
3. Select **Wi-Fi Setup**.

   You see a screen like this:

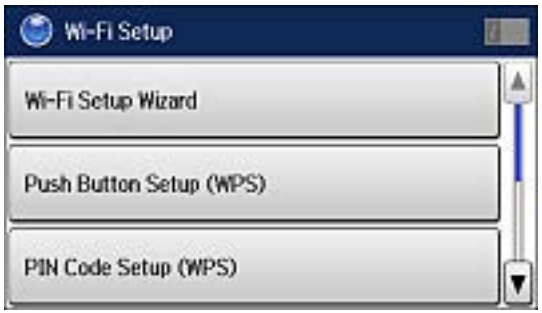

4. Select **Wi-Fi Setup Wizard**.

   **Note:** If you need to disable the wireless network to set up your product on an Ethernet network, scroll down and select **Disable Wi-Fi** instead. Then follow the instructions on changing to a wired network connection in this guide.

5. Select the name of your wireless network or enter the name manually.

   **Note:** To enter the wireless network name manually, select **Other Networks** and select the **Network (SSID)** field. Use the displayed keypad to enter your network name.

6. Select the **Password** field and enter your wireless password using the displayed keypad.

   **Note:** The network name and password are case sensitive. Be sure to correctly enter uppercase and lowercase letters, and numeric or special characters.

   - Press ◄ or ► to move the cursor.
   - Press ⇧ to change the case of letters.
   - Press ⌫ to delete the previous character.
   - Press 123/ to enter numbers and symbols.
   - Press ␣ to enter a space.

7. Press ↵ when you finish entering your password and select **Proceed**.

8. Confirm the displayed network settings and select **OK** to save them.

   **Note:** If you need to change a setting, press the back button.

9. If you want to print a network setup report, press one of the buttons. (Otherwise, select **Done**.)
10. Press the home button to exit.

    Your product should now be connected to the network.

    **Note:** If the WiFi connection symbol isn't lit or doesn't appear on the LCD screen, you may have selected the wrong network name or entered the password incorrectly. Repeat these steps to try again.

**Parent topic:** Wi-Fi Infrastructure Mode Setup

**Related references**

Status Icon Information

**Related tasks**

Entering Characters on the LCD Screen

# Wi-Fi Direct Mode Setup

You can set up your product to communicate directly with your computer or another device without requiring a wireless router or access point.

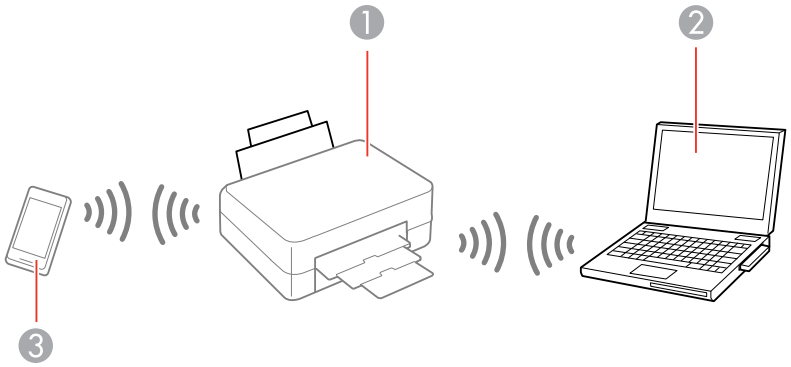


1 Epson product

2 Computer with a wireless interface

3 Other wireless device

Your product automatically selects one of these modes to communicate with your computer or device:

**Access point mode**
If your product is not already connected to a wireless network, it enters access point mode and the product itself acts as the network access point for up to 4 devices. When operating in this mode, your product displays an **AP** connection symbol on the LCD screen.

**Peer-to-peer mode**
If your product is already connected to a wireless network, it enters peer-to-peer mode and disconnects from any other networks. This also disables any other product features requiring access to the Internet. When operating in this mode, your product displays a **Direct** or **D** connection symbol on the LCD screen.

**Note:** To disconnect a peer-to-peer mode connection, release the connection to your product from your computer or other device. Your product will reconnect to the previously used network.

Enabling Wi-Fi Direct Mode

**Parent topic:** Wi-Fi or Wired Networking

**Related references**
Status Icon Information

## Enabling Wi-Fi Direct Mode

You can enable Wi-Fi Direct mode to allow direct communication between your product and computer or other devices without a wireless router or access point.

1. Press the home button, if necessary.
2. Press .
3. Select **Wi-Fi Setup**.

You see a screen like this:

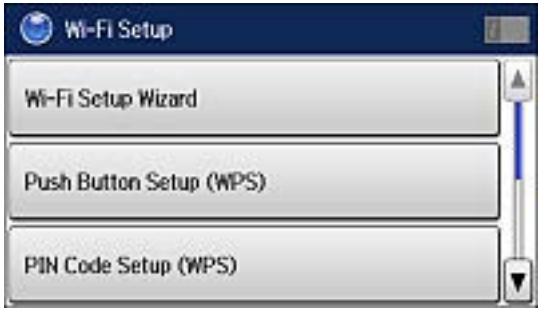


4. Scroll down and select **Wi-Fi Direct Setup**.
5. Select **Connection Setup**.
6. Select **Change Password** and select **Yes**.

   **Note:** If you have already connected devices or computers to your product via Wi-Fi Direct, they are disconnected when you change the password.

7. Enter your new Wi-Fi Direct password.

**Note:** Your password must be at least 8 and no more than 22 characters long.

- Press ◄ or ► to move the cursor.
- Press ⇧ to change the case of letters.

- Press ⌫ to delete the previous character.
- Press 123# to enter numbers and symbols.
- Press ⎵ to enter a space.

8. Press ↵ when you finish entering your password.

   You see a screen like this:

9. Scroll down to view the SSID (Wi-Fi network name) and password.
10. Use your computer or wireless device to select the Wi-Fi network name (SSID) displayed on the LCD screen, then enter the password shown.
11. Press the ⌂ home button to exit.

    You see either an **AP** or **Direct** connection symbol on the LCD screen and should be able to print directly to your product from your computer or device.

    **Note:** If the **AP** or **Direct** connection symbol is not displayed on the LCD screen, Wi-Fi Direct mode is not enabled. Repeat these steps to try again.

**Parent topic:** Wi-Fi Direct Mode Setup

**Related references**

Status Icon Information

**Related tasks**

Entering Characters on the LCD Screen

# Wi-Fi Protected Setup (WPS)

If your network uses a WPS-enabled wireless router or access point, you can quickly connect your product to the network using Wi-Fi Protected Setup (WPS).

**Note:** To check if your router is WPS-enabled, look for a button labeled **WPS** on your router or access point. If there is no hardware button, there may be a virtual WPS button in the software for the device. Check your network product documentation for details.

Using WPS to Connect to a Network

**Parent topic:** Wi-Fi or Wired Networking

## Using WPS to Connect to a Network

If you have a WPS-enabled wireless router or access point, you can use Wi-Fi Protected Setup (WPS) to connect your product to the network.

1. Press the home button, if necessary.
2. Press .
3. Select **Wi-Fi Setup**.

   You see a screen like this:

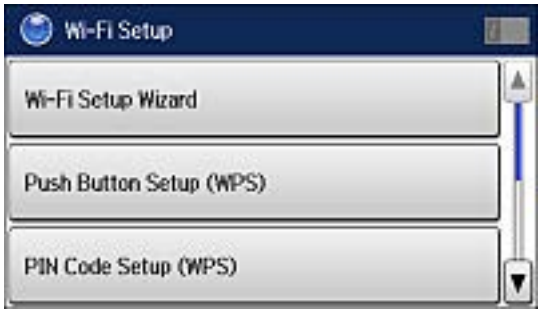


4. Select **Push Button Setup (WPS)**.
5. Follow the instructions on the LCD screen to complete WPS setup.
6. Press the home button to exit.

   Your product should now be connected to the network.

**Parent topic:** Wi-Fi Protected Setup (WPS)

# Printing a Network Status Sheet

You can print a network status sheet to help you determine the causes of any problems you may have using your product on a network.

1. Press the home button, if necessary.
2. Select **Setup**.

   You see a screen like this:

3. Select **Network Status**.
4. Select **Wi-Fi/Network Status**.

   You see a screen like this:

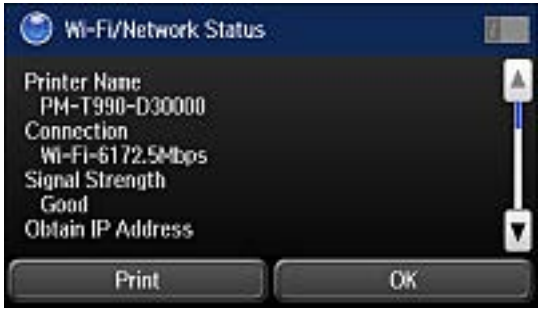


**Note:** If you are connected to a wireless network, the signal strength is also displayed.

5. Select **Print**.
6. Press one of the ◈ buttons to print the network status sheet.

Examine the settings shown on the network status sheet to diagnose any problems you have.

**Parent topic:** Wi-Fi or Wired Networking

# Changing or Updating Network Connections

See these sections to change or update how your product connects to a network.

Accessing the Web Config Utility
Changing a USB Connection to a Wi-Fi Connection
Changing a Wi-Fi Connection to a Wired Network Connection
Connecting to a New Wi-Fi Router
Configuring Email Server Settings
Disabling Wi-Fi Features

**Parent topic:** Wi-Fi or Wired Networking

## Accessing the Web Config Utility

You can select your product's network settings and confirm its operating status using a web browser. You do this by accessing your product's built-in Web Config utility from a computer or other device that is connected to the same network as your product.

**Note:** For more information on the Web Config utility see the *Administrator's Guide*.

1. Print a network status sheet.
2. Locate the IP Address for your product that is listed on the network status sheet.
3. On a computer or other device connected to the same network as your product, open a web browser.
4. Enter your product's IP address into the address bar.

   You see the available Web Config utility options.

**Parent topic:** Changing or Updating Network Connections

**Related tasks**

Printing a Network Status Sheet

## Changing a USB Connection to a Wi-Fi Connection

If you have already connected your product to your computer using a USB connection, you can change to a Wi-Fi connection or add a Wi-Fi connection to print wirelessly.

1. Do one of the following:
   - If you want to use only a Wi-Fi connection, disconnect the USB cable from your product. With Windows, also uninstall your product software.
   - If you want to add a Wi-Fi connection in addition to a USB connection, leave the USB cable connected to your product.
2. Download and install your product software from the Epson website using the instructions on the *Start Here* sheet.

**Parent topic:** Changing or Updating Network Connections

## Changing a Wi-Fi Connection to a Wired Network Connection

If you have already connected your product to your computer wirelessly, you can change to a wired network connection if necessary.

1. Disable your product's Wi-Fi features.
2. Connect one end of an Ethernet network cable to the product's **LAN** port.
3. Connect the other end to any available LAN port on your router or access point.
4. Uninstall your product software.
5. Download and install your product software from the Epson website.
6. Follow the on-screen instructions to install the software.
7. When you see the Select Your Connection screen, select **Wired network connection**.
8. If you see a Select Setup Option screen, select **Setup printer for the first time**.
9. Continue following the rest of the on-screen instructions.

**Parent topic:** Changing or Updating Network Connections

**Related tasks**

Disabling Wi-Fi Features

## Connecting to a New Wi-Fi Router

If you change the wireless router you have been using on your network, you need to update your product's Wi-Fi connection to the new router.

**Note:** If you switch to a 5 GHz wireless router, set the router to operate in dual band (2.4 GHz and 5 GHz) mode. See your router documentation for instructions.

1. Do one of the following:
   - **Windows**: Uninstall your product software.
   - **OS X**: Go to the next step.
2. Download and install your product software from the Epson website using the instructions on the *Start Here* sheet.

**Parent topic:** Changing or Updating Network Connections

**Related tasks**

Uninstalling Product Software - Windows

## Configuring Email Server Settings

To use features such as scanning to email or forwarding faxes to email, you need to configure the email server. You can select settings for the email server using the control panel on the product.

**Note:** These settings can be locked by an administrator. If you cannot access these settings, contact your administrator for assistance.

1. Press the home button, if necessary.
2. Select **Setup**.

   You see a screen like this:

3. Scroll down and select **System Administration**. Enter the administrator password, if necessary.

4. Select **Wi-Fi/Network Settings**.
5. Select **Advanced Setup**.
6. Select **Email Server**.
7. Select **Server Settings**.

   You see a screen like this:

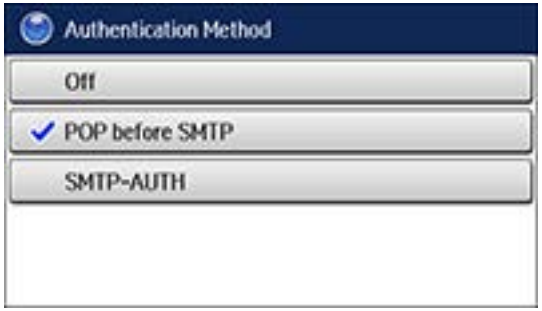


8. Select one of the options shown above, then select the settings you want to use. Contact your internet service provider if necessary to confirm the authentication method for the email server.
9. Select **OK** to save and select **Done** to exit.
10. Select **Connection Check** to verify the connection to the email server.

**Parent topic:** Changing or Updating Network Connections

**Related tasks**

Scanning to Email
Forwarding Received Faxes

## Disabling Wi-Fi Features

You may need to disable your product's Wi-Fi features if you change your network connection type or need to solve a problem with your network connection.

**Note:** Before disabling Wi-Fi features, make a note of your product's SSID (network name) and password, and any network settings selected for the Epson Connect services you may use.

1. Press the ⌂ home button, if necessary.

2. Press .
3. Select **Wi-Fi Setup**.

   You see this screen:

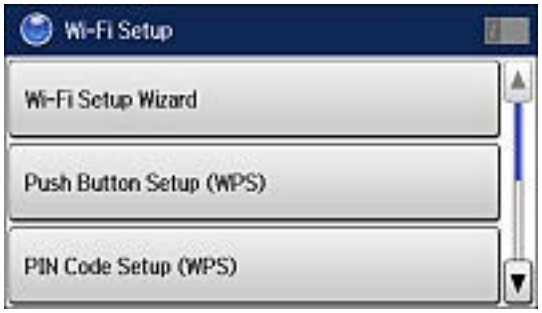


4. Scroll down and select **Disable Wi-Fi**.
5. Select **Yes** to disable Wi-Fi.

**Parent topic:** Changing or Updating Network Connections

# Enabling Epson Universal Print Driver (PCL) or PostScript Printing

Before enabling Epson Universal Print Driver (PCL) or PostScript printing on your product, make sure you have installed the software as described on the *Start Here* sheet.

To download the Epson Universal Print Driver or PostScript drivers, go to epson.com/support/wf8590.

Selecting PDL (Page Description Language) Settings
Selecting Printer Language and Interface Settings
Printing a PS3 (PostScript) Status Sheet

## Selecting PDL (Page Description Language) Settings

You can select settings for PCL and PostScript printing using the control panel on the product.

**Note:** These settings can be locked by an administrator. If you cannot access these settings, contact your administrator for assistance.

1. Press the home button, if necessary.
2. Select **Setup**.

   You see a screen like this:

3. Scroll down and select **System Administration**. Enter the administrator password, if necessary.
4. Select **Universal Print Settings**.
5. Select **PDL Print Configuration**.

You see a screen like this:

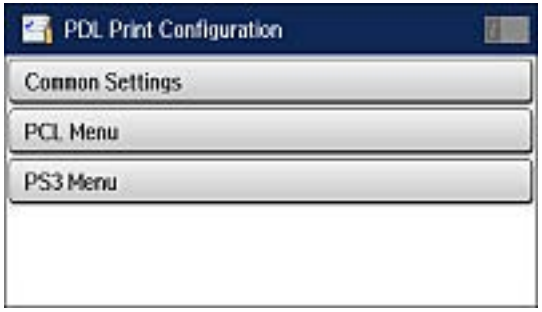


6. Select one of the options shown above, then select the settings you want to use.
7. When you are finished, press the home button to exit.

PDL Print Configuration Options

**Parent topic:** Enabling Epson Universal Print Driver (PCL) or PostScript Printing

## PDL Print Configuration Options

Select the **PDL Print Configuration** options you want to use for PCL or PostScript printing.

| PDL Print Configuration option | Available settings | Description |
|---|---|---|
| **Common Settings** | | |
| **Paper Size** | Various sizes | Sets the default paper size for PCL or PostScript printing. |
| **Paper Type** | Various paper types | Sets the default paper type for PCL or PostScript printing. |
| **Orientation** | **Portrait** | Sets the default orientation for PCL or PostScript printing. |
| | **Landscape** | |
| **Quality** | **Draft** | Sets the quality for PCL or PostScript printing. |
| | **Standard** | |
| | **Best** | |

| PDL Print Configuration option | Available settings | Description |
|---|---|---|
| **Ink Save Mode** | **On/Off** | Saves ink by reducing print density. |
| **Print Order** | **Last Page on Top** | Starts printing from the first page of a file. |
| | **First Page on Top** | Starts printing from the last page of a file. |
| **Number of Copies** | 1 to 999 | Selects the number of copies to print. |
| **Binding Margin** | **Left Edge** | Specifies the binding edge for double-sided documents. |
| | **Top Edge** | |
| **Auto Paper Ejection** | **On/Off** | Ejects paper automatically when printing is stopped during a print job. |
| **2-Sided Printing** | **On/Off** | Selects duplex printing. |
| **PCL Menu** | | |
| **Font Source** | **Resident** | Uses a font preinstalled on the printer. |
| | **Download** | Uses a font you have downloaded. |
| **Font Number** | 1 to 111 | Selects the default font number for the default font source. |
| **Pitch** | 0.44 to 99.99 cpi | Selects the default font pitch if the font is scalable and fixed-pitch (availability depends on font source and number settings). |
| **Height** | 4.00 to 999.75 pt | Selects the default font height if the font is scalable and proportional (availability depends on font source and number settings). |
| **Symbol Set** | Various | Selects the default symbol set. If the selected font is not available for the selected symbol set, the font source and number are replaced with **IBM-US** (the default setting). |

| PDL Print Configuration option | Available settings | Description |
|---|---|---|
| **Form** | 5 to 128 lines | Sets the number of lines for the selected paper size and orientation. Changes the line spacing (VMI) stored in the printer. Later changes in page size or orientation cause changes in the **Form** value based on the stored VMI. |
| **CR Function** | **CR** | Selects the line feed command when printing with a driver from a specific operating system. |
| | **CR+LF** | |
| **LF Function** | **LF** | |
| | **CR+LF** | |
| **Paper Source Assign** | **4** | Makes the paper source select command compatible with HP LaserJet 4 |
| | **4K** | Makes the paper source select command compatible with HP LaserJet 4000, 5000, and 8000 |
| | **5S** | Makes the paper source select command compatible with HP LaserJet 5S |
| **PS3 Menu** | | |
| **Error Sheet** | **On/Off** | Prints a sheet showing the status when errors occur during PostScript or PDF printing. |
| **Coloration** | **Color** | Selects the color mode for PostScript printing. |
| | **Mono** | |
| **Image Protect** | **On/Off** | Disable to lower the print quality automatically if the printer's memory becomes full. |
| **Binary** | **On/Off** | Enable when printing files that contain binary images (available when the product is connected to the network). Allows you to print binary images even if the driver is set to ASCII. |
| **Text Detection** | **On/Off** | Converts a text file to a PostScript file when printing (available when **Printing Language** is set to **PS3**). |

| PDL Print Configuration option | Available settings | Description |
|---|---|---|
| **PDF Page Size** | Various sizes | Selects the paper size when printing a PDF file. If **Auto** is selected, the paper size is determined based on the size of the first page. |

**Parent topic:** Selecting PDL (Page Description Language) Settings

## Selecting Printer Language and Interface Settings

You can select printer language and interface settings using the control panel on the product.

**Note:** These settings can be locked by an administrator. If you cannot access these settings, contact your administrator for assistance.

1. Press the home button, if necessary.
2. Select **Setup**.

   You see a screen like this:

3. Scroll down and select **System Administration**. Enter the administrator password, if necessary.
4. Select **Printer Settings**.

You see a screen like this:

5. Select the **Printing Language** and other settings you want to use.
6. When you are finished, press the home button to return to the Home screen.

Printer Language and Interface Options

**Parent topic:** Enabling Epson Universal Print Driver (PCL) or PostScript Printing

## Printer Language and Interface Options

Select the settings you want to use.

| Printer Settings option | Available settings | Description |
|---|---|---|
| **USB I/F Timeout Setting** | 0.5 to 300 seconds | Specify the length of time before ending USB communication from a computer using the PCL or PostScript driver. This setting is necessary to avoid endless USB communication. |
| **Printing Language** | **Auto** | Select the language for the USB or network interface. |
| | **PCL** | |
| | **PS3** | |
| | **PDF** | |
| **PC Connection via USB** | **Enable** | Select whether to allow USB communication with the product. |
| | **Disable** | |

**Parent topic:** Selecting Printer Language and Interface Settings

# Printing a PS3 (PostScript) Status Sheet

You can print a PS3 (PostScript) status sheet to confirm the current font information and PostScript printing software version.

1. Press the home button, if necessary.
2. Select **Setup**.

   You see a screen like this:

3. Select **Print Status Sheet**.
4. Select **PS3 Status Sheet**.
5. Press one of the ◇ buttons to print the status sheet.

**Parent topic:** Enabling Epson Universal Print Driver (PCL) or PostScript Printing

# Loading Paper

Before you print, load paper for the type of printing you will do.

**Note:** Load only plain paper when printing with the PostScript (PS3) printer software.

Loading Paper in the Cassette
Loading Paper and Envelopes in the Rear Paper Feed Slot
Loading Paper in the Front Paper Feed Slot
Paper Loading Capacity
Available Epson Papers
Paper or Media Type Settings - Printing Software
Selecting the Paper Settings for Each Source - Control Panel
Selecting Default Paper Settings - Administrator
Installing the Optional Cabinet and Paper Cassettes

## Loading Paper in the Cassette

You can load paper up to this size in the paper cassette: A3 (11.7 × 16.5 inches [297 × 420 mm])

**Note:** If the optional paper cassette units are installed, do not remove more than one cassette at a time.

1. Make sure the product is not operating and pull out the paper cassette.

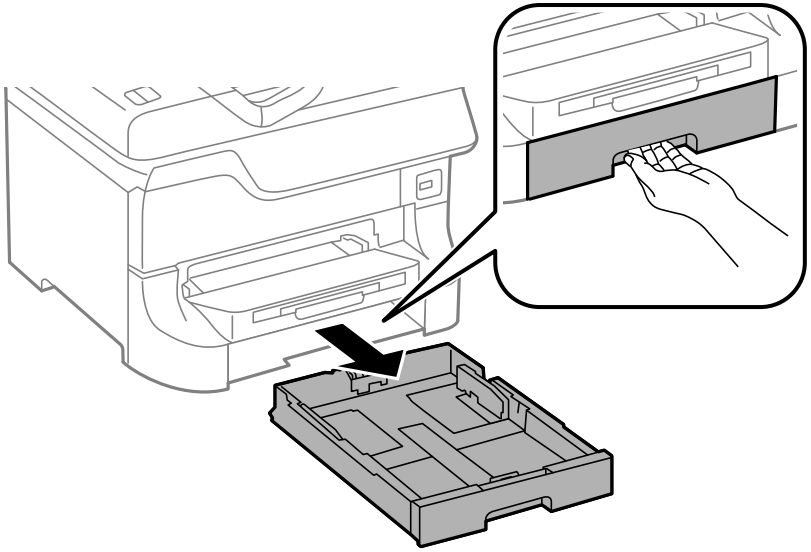

2. Slide the front edge guide outward all the way, then slide the side edge guides to the paper size you are using.

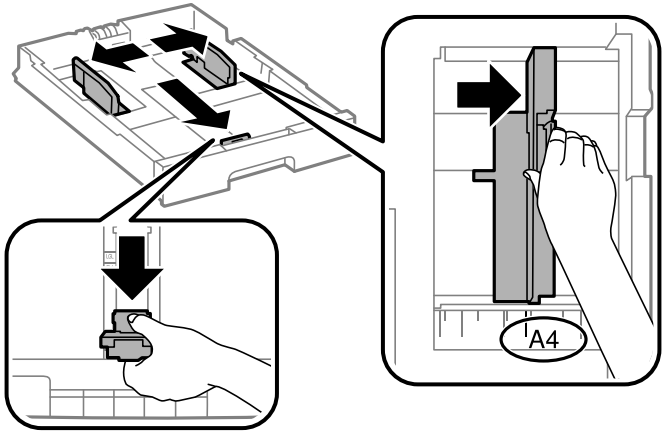

3. Load paper with the printable side facedown and slide the front edge guide against the paper.

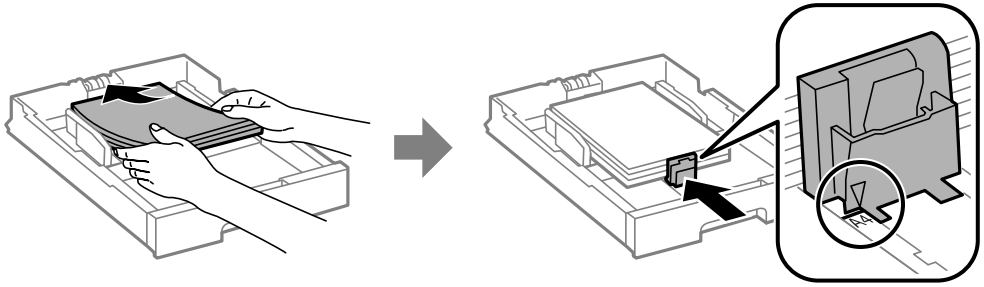

**Note:** Make sure the paper fits beneath the arrow mark inside the edge guides.

4. Make sure the paper size label matches the size of the paper loaded in the paper cassette. If necessary, remove the label holder and change the paper size indicated on the label.

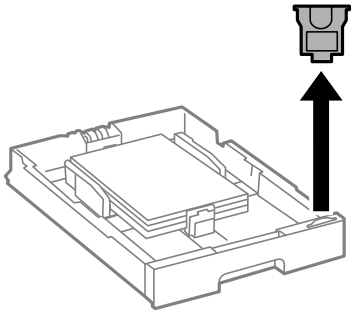

5. Insert the paper cassette all the way into the product.

6. Extend the output tray.

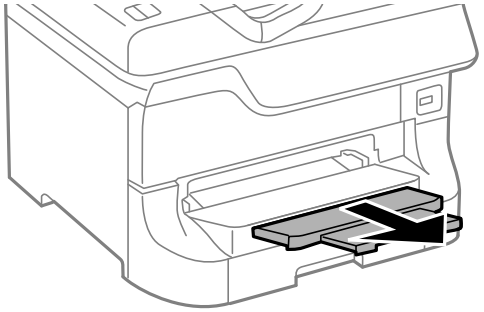

7. Select the size and type of paper you loaded on the product LCD screen.

Always follow these paper loading guidelines:

- Load only the recommended number of sheets.
- Load paper short edge first, no matter which way your document faces.
- Load the printable side facedown.
- Load letterhead or pre-printed paper top edge first.
- Do not load paper above the arrow mark inside the edge guides.
- Check the paper package for any additional loading instructions.

**Parent topic:** Loading Paper

**Related references**

Paper Loading Capacity

**Related tasks**

Loading Paper and Envelopes in the Rear Paper Feed Slot

Loading Paper in the Front Paper Feed Slot

# Loading Paper and Envelopes in the Rear Paper Feed Slot

You can print envelopes or documents in a variety of paper types and sizes in the rear paper feed slot.

1. Open the feeder guard and pull up the paper support.

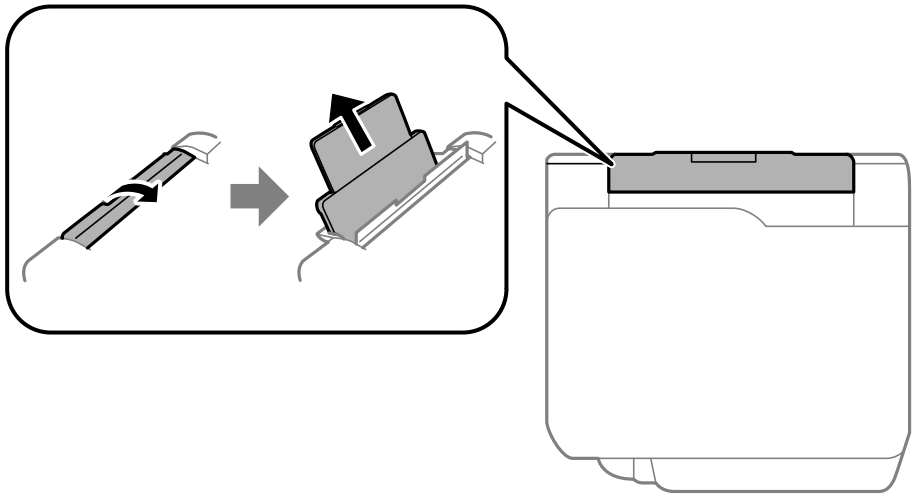

2. Slide the edge guides outward.

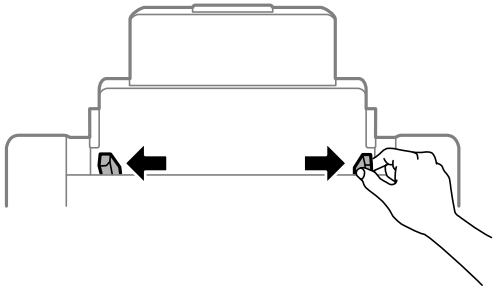

3. If you are inserting a stack of paper, fan the sheets and tap the stack on a flat surface to even the edges.

   **Note:** You can load one sheet of binder paper with holes on one of the long edges as shown. Do not select automatic 2-sided printing for this type of paper.

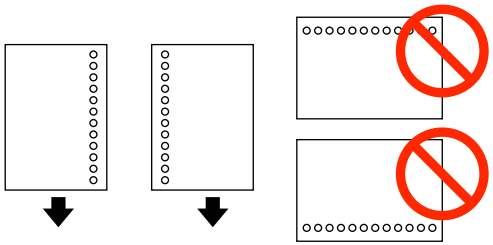

4. Do one of the following:
   - Insert paper, glossy or printable side up and short edge first, in the center of the slot.

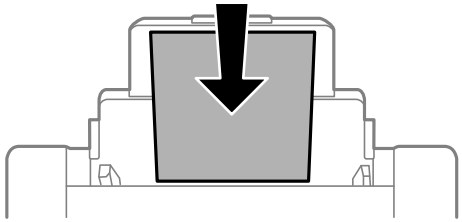

   **Caution:** To prevent paper feeding problems, make sure you do not load paper above the arrow marks inside the edge guides.

- Load envelopes short edge first, with the flap facing down and the flap edge to the left, in the center of the slot.

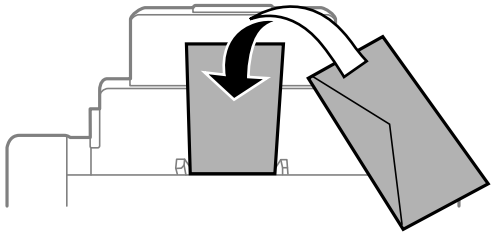

5. Slide the edge guides against the paper, but not too tightly.

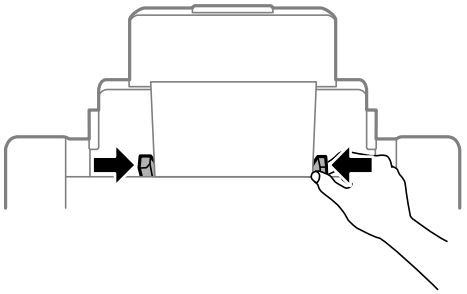

6. Extend the output tray.

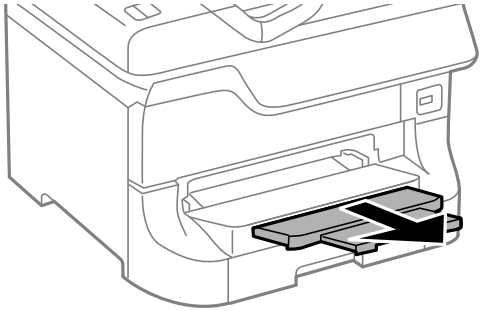

7. Select the size and type of paper you loaded in the **Paper Setup** menu.

Always follow these paper loading guidelines:

- Load only the recommended number of sheets.
- Load paper short edge first, no matter which way your document faces.
- Load the printable side faceup.
- Load letterhead or pre-printed paper top edge first.
- Do not load paper above the arrow mark inside the edge guides.
- If you have trouble loading a stack of envelopes, press each envelope flat before loading it or load one envelope at a time.
- If print quality declines when printing multiple envelopes, try loading one envelope at a time.
- Do not load envelopes that are curled, folded, or too thin.
- Check the paper package for any additional loading instructions.

**Parent topic:** Loading Paper

**Related references**

Paper Loading Capacity

**Related tasks**

Loading Paper in the Cassette

Loading Paper in the Front Paper Feed Slot

# Loading Paper in the Front Paper Feed Slot

You can load one sheet of paper in the front paper feed slot.

**Note:** You cannot load paper while printing from the front paper feed slot. Paper that is too stiff may not load correctly even if it is within the product's paper thickness specifications.

1. Extend the output tray.

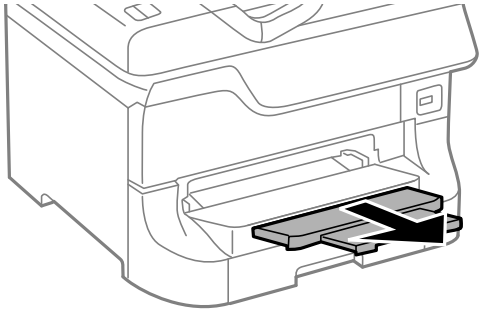

2. Slide the edge guides to the paper size you are using.

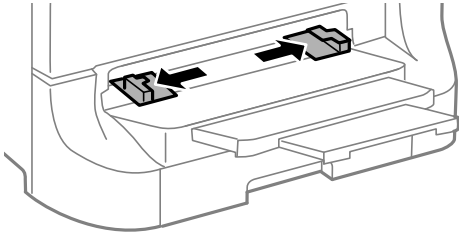

3. Insert the paper with the printable side facedown until the product pulls it in partially.

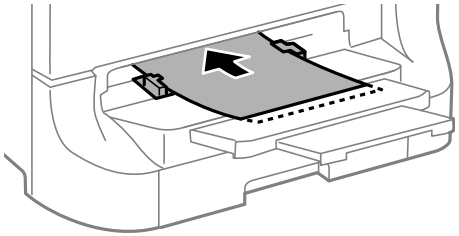

**Note:** Keep the paper straight to prevent it from loading at an angle.

Always follow these paper loading guidelines:

- Load only one sheet at a time.
- Load paper short edge first, no matter which way your document faces.
- Load the printable side facedown.
- Load letterhead or pre-printed paper top edge first.
- Check the paper package for any additional loading instructions.

**Parent topic:** Loading Paper

**Related references**

Paper Specifications
Paper Loading Capacity

**Related tasks**

Loading Paper in the Cassette
Loading Paper and Envelopes in the Rear Paper Feed Slot

## Paper Loading Capacity

| Paper type | Loading capacity | | |
|---|---|---|---|
| | Paper cassettes | Rear paper feed slot | Front paper feed slot |
| Plain paper[1] | A3 (11.7 × 16.5 inches [297 × 420 mm])<br>Up to the arrow mark | 50 sheets | 1 |
| | Letter (8.5 × 11 inches [216 × 279 mm]), A4 (8.3 × 11.7 inches [210 × 297 mm]) , and Legal (8.5 × 14 inches [216 × 356 mm])<br>Up to the arrow mark | 80 sheets | 1 |
| Epson Bright White Paper[1] | 200 sheets (cassette 1)<br>400 sheets (cassettes 2 to 4) | 50 sheets | 1 |

| Paper type | Loading capacity | | |
|---|---|---|---|
| | Paper cassettes | Rear paper feed slot | Front paper feed slot |
| Epson Presentation Paper Matte | — | A3 (11.7 × 16.5 inches [297 × 420 mm]) and larger<br>50 sheets<br>Letter (8.5 × 11 inches [216 × 279 mm]) and smaller<br>70 sheets | — |
| Epson Photo Paper Glossy<br>Epson Premium Photo Paper Glossy | — | 20 | |
| Epson Premium Photo Paper Semi-gloss<br>Epson Ultra Premium Photo Paper Glossy<br>Epson Premium Presentation Paper Matte<br>Epson Premium Presentation Paper Matte Double-sided<br>Epson Brochure & Flyer Paper Matte Double-sided | — | A3 (11.7 × 16.5 inches [297 × 420 mm]) and larger<br>10 sheets<br>Letter (8.5 × 11 inches [216 × 279 mm]) and smaller<br>20 sheets | — |
| Thick paper (cardstock up to 68 lb [256 g/m$^2$])[2] | — | A3 (11.7 × 16.5 inches [297 × 420 mm]), Letter (8.5 × 11 inches [216 × 279 mm]) and A4 (8.3 × 11.7 inches [210 × 297 mm])<br>10 sheets | — |
| Envelopes | — | 10 envelopes | — |

[1]You can print 2-sided print jobs automatically or manually. You can only print 2-sided print jobs manually in the rear paper feed slot. Load up to 30 sheets for manual 2-sided print jobs.

[2] You can load up to 5 sheets for manual 2-sided print jobs.

**Parent topic:** Loading Paper

## Available Epson Papers

You can purchase genuine Epson ink and paper at Epson Supplies Central at epson.com/ink3 (U.S. sales) or epson.ca (Canadian sales). You can also purchase supplies from an Epson authorized reseller. To find the nearest one, call 800-GO-EPSON (800-463-7766).

| Paper Type | Size | Part number | Sheet count |
|---|---|---|---|
| Epson Bright White Paper | Letter (8.5 × 11 inches [216 × 279 mm]) | S041586 | 500 |
| Epson Brochure & Flyer Paper Matte Double-sided | Letter (8.5 × 11 inches [216 × 279 mm]) | S042384 | 150 |
| Epson Presentation Paper Matte | Letter (8.5 × 11 inches [216 × 279 mm]) | S041062 | 100 |
| | Legal (8.5 × 14 inches [216 × 356 mm]) | S041067 | 100 |
| | 11 × 17 inches (279 × 432 mm) | S041069 | 100 |
| | 13 × 19 inches (330 × 483 mm) | S041070 | 100 |
| Epson Premium Presentation Paper Matte | 8 × 10 inches (203 × 254 mm) | S041467 | 50 |
| | Letter (8.5 × 11 inches [216 × 279 mm]) | S041257<br>S042180 | 50<br>100 |
| | 11 × 14 inches (279 × 356 mm) | S041468 | 50 |
| | A3 (11.7 × 16.5 inches [297 × 420 mm]) | S041260 | 50 |
| | 13 × 19 inches (330 × 483 mm) | S041263 | 50 |

| Paper Type | Size | Part number | Sheet count |
|---|---|---|---|
| Epson Premium Presentation Paper Matte Double-sided | Letter (8.5 × 11 inches [216 × 279 mm]) | S041568 | 50 |
| Epson Photo Paper Glossy | 4 × 6 inches (102 × 152 mm) | S041809<br>S042038 | 50<br>100 |
| | Letter (8.5 × 11 inches [216 × 279 mm]) | S041141<br>S041649<br>S041271 | 20<br>50<br>100 |
| | 11 × 17 inches (279 × 432 mm) | S041156 | 20 |
| | 13 × 19 inches (330 × 483 mm) | S041143 | 20 |
| Epson Premium Photo Paper Glossy | 4 × 6 inches (102 × 152 mm) | S041808<br>S041727 | 40<br>100 |
| | 16:9 wide (4 × 7.1 inches [102 × 181 mm]) | S042109 | 20 |
| | 5 × 7 inches (127 × 178 mm) | S041464 | 20 |
| | 8 × 10 inches (203 × 254 mm) | S041465 | 20 |
| | Letter (8.5 × 11 inches [216 × 279 mm]) | S042183<br>S041667 | 25<br>50 |
| | 11 × 14 inches (279 × 356 mm) | S041466 | 20 |
| | 11 × 17 inches (279 × 432 mm) | S041290 | 20 |
| | A3 (11.7 × 16.5 inches [297 × 420 mm]) | S041288 | 20 |
| | 13 × 19 inches (330 × 483 mm) | S041289 | 20 |

| Paper Type | Size | Part number | Sheet count |
|---|---|---|---|
| Epson Ultra Premium Photo Paper Glossy | 4 × 6 inches (102 × 152 mm) | S042181<br>S042174 | 60<br>100 |
| | 5 × 7 inches (127 × 178 mm) | S041945 | 20 |
| | 8 × 10 inches (203 × 254 mm) | S041946 | 20 |
| | Letter (8.5 × 11 inches [216 × 279 mm]) | S042182<br>S042175 | 25<br>50 |
| Epson Premium Photo Paper Semi-gloss | 4 × 6 inches (102 × 152 mm) | S041982 | 40 |
| | Letter (8.5 × 11 inches [216 × 279 mm]) | S041331 | 20 |
| | 13 × 19 inches (330 × 483 mm) | S041327 | 20 |

**Parent topic:** Loading Paper

## Paper or Media Type Settings - Printing Software

| For this paper | Select this paper Type or Media Type setting |
|---|---|
| Plain paper<br>Epson Bright White Paper | Plain Paper / Bright White Paper |
| Letterhead paper | Letterhead |
| Recycled paper | Recycled |
| Color paper | Color |
| Preprinted paper | Preprinted |
| Envelopes | Envelope |
| Epson Ultra Premium Photo Paper Glossy | Ultra Premium Photo Paper Glossy |
| Epson Premium Photo Paper Glossy | Premium Photo Paper Glossy |
| Epson Photo Paper Glossy | Photo Paper Glossy |
| Epson Premium Photo Paper Semi-gloss | Premium Photo Paper Semi-Gloss |

| For this paper | Select this paper Type or Media Type setting |
|---|---|
| Epson Presentation Paper Matte<br>Epson Premium Presentation Paper Matte<br>Epson Premium Presentation Paper Matte Double-sided<br>Epson Brochure & Flyer Paper Matte Double-sided | Premium Presentation Paper Matte |
| Cardstock up to 68 lb (256 g/m$^2$) | Card Stock |

**Note:** The settings listed here are available only when printing from your computer; they do not apply to your product's control panel settings.

**Parent topic:** Loading Paper

## Selecting the Paper Settings for Each Source - Control Panel

You can change the default paper size and paper type for each source using the control panel on the product.

1. Press the home button, if necessary.
2. Select **Setup**.

   You see a screen like this:

3. Select **Paper Setup**.
4. Select the paper source you want to change.

You see a screen like this:

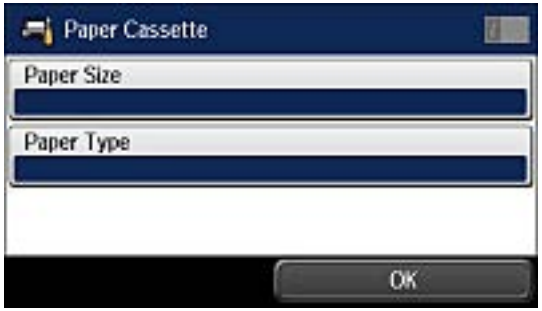


5. Select **Paper Size**.
6. Select the paper size you loaded.
7. Select **Paper Type**.
8. Select the paper type you loaded.
9. Select **OK**.
10. Select another paper source to change or press home to return to exit.

Paper Type Settings - Control Panel

**Parent topic:** Loading Paper

## Paper Type Settings - Control Panel

Select a **Paper Type** setting that matches the paper you loaded.

| Paper type loaded | Paper Type setting |
|---|---|
| Plain paper<br>Epson Bright White Paper | Plain Paper |
| Letterhead paper | Letterhead |
| Recycled paper | Recycled |
| Color paper | Color |
| Preprinted paper | Preprinted |

| Paper type loaded | Paper Type setting |
|---|---|
| Envelopes | Envelope |
| Epson Ultra Premium Photo Paper Glossy | Ultra Glossy |
| Epson Premium Photo Paper Glossy | Prem. Glossy |
| Epson Photo Paper Glossy | Glossy |
| Epson Premium Photo Paper Semi-gloss | Prem. Semi-Gloss |
| Epson Presentation Paper Matte<br>Epson Premium Presentation Paper Matte<br>Epson Premium Presentation Paper Matte Double-sided<br>Epson Brochure & Flyer Paper Matte Double-sided | Prem. Matte |
| Cardstock up to 68 lb (256 g/m$^2$) | Card Stock |

**Parent topic:** Selecting the Paper Settings for Each Source - Control Panel

# Selecting Default Paper Settings - Administrator

You can adjust default paper settings as an administrator that apply to all print jobs sent to the product.

**Note:** These settings can be locked by an administrator. If you cannot access these settings, contact your administrator for assistance.

Selecting the Default Printer Settings
Setting the Universal Print Settings

**Parent topic:** Loading Paper

## Selecting the Default Printer Settings

You can change default printer settings using the control panel on the product.

**Note:** These settings can be locked by an administrator. If you cannot access these settings, contact your administrator for assistance.

1. Press the home button, if necessary.

2. Select **Setup**.

   You see a screen like this:

3. Scroll down and select **System Administration**. Enter the administrator password, if necessary.

   You see a screen like this:

4. Select **Printer Settings**.
5. Select the **Paper Source Settings** options you want to use.
6. Select one of these **Auto Error Resolver** options:
   - Turn on this setting to display a warning and print single-sided when a 2-sided printing error occurs, or to print only what the printer could process when a memory full error occurs.
   - Turn off this setting to display an error message and stop printing if an error occurs.
7. When you are finished, press the home button to exit.

Paper Source Settings Options

**Parent topic:** Selecting Default Paper Settings - Administrator

### Paper Source Settings Options

Select the paper source options you want to use for your printed jobs.

| Paper Source Settings option | Available settings | Description |
|---|---|---|
| **Rear Paper Feed Priority** | **Normal** | Select **Normal** to give printing priority to paper loaded in the rear paper feed slot. |
| | **Last** | |
| **A4/Letter Auto Switching** | **On** | Select **On** to switch the selected paper size to match the loaded paper (Letter or A4) if the wrong size is selected. |
| | **Off** | |
| **Auto Select Settings** | **Copy** | Select **On** for any of these settings to automatically print on paper from any source containing paper that matches your paper settings. |
| | **Fax** | |
| | **Other** | |
| **Error Notice** | **Paper Size Notice** | Select **On** for either of these settings to display an error message when the selected paper type or size does not match the loaded paper. |
| | **Paper Type Notice** | |

**Parent topic:** Selecting the Default Printer Settings

## Setting the Universal Print Settings

You can change the default universal print settings using the control panel on the product.

**Note:** These settings can be locked by an administrator. If you cannot access these settings, contact your administrator for assistance.

1. Press the home button, if necessary.
2. Select **Setup**.

You see this screen:

3. Scroll down and select **System Administration**. Enter the administrator password, if necessary.
   You see this screen:

4. Select **Universal Print Settings**.
5. Adjust the settings as necessary.
6. When you are finished, press the home button to exit.

Universal Print Settings Options

**Parent topic:** Selecting Default Paper Settings - Administrator

## Universal Print Settings Options

Select the universal print setting options you want to use for your printed jobs.

| Universal Print Settings option | Available settings | Description |
|---|---|---|
| **Top Offset** | — | Adjust the top or left margin. |
| **Left Offset** | — | |
| **Top Offset in Back** | — | Adjust the top or left margin of the back page when performing double-sided printing. |
| **Left Offset in Back** | — | |
| **Check Paper Width** | **On** | Select **On** to check the paper width before printing. This prevents printing beyond the edges of the paper when the paper size settings are incorrect, but may reduce the printing speed. |
| | **Off** | |
| **Dry Time** | **Standard** | Select the ink drying time you want to use when performing double-sided printing. |
| | **Long** | |
| | **Longer** | |
| **Skip Blank Page** | **On** | Select **On** to skip printing of blank pages automatically. |
| | **Off** | |
| **PDL Configuration** | **Common Settings** | Selects the settings for printing with PCL and PostScript Page Description Language drivers. |
| | **PCL Menu** | |
| | **PS3 Menu** | |

**Parent topic:** Setting the Universal Print Settings

# Installing the Optional Cabinet and Paper Cassettes

Follow these instructions to add the optional cabinet and paper cassette to your product. If you are installing the optional cabinet, install the cabinet under the bottom of the optional cassette unit first.

Installing the Optional Cabinet
Installing the Optional Paper Cassette Units

**Parent topic:** Loading Paper

## Installing the Optional Cabinet

You can install the optional cabinet to provide mobility and extra storage space.

1. Turn off the product, and unplug the power cord and any connected cables.

   **Warning:** To avoid electric shock, make sure you unplug the power cord.

2. Remove the cabinet from its packaging and remove any protective materials.
3. Make sure you have all the items shown here:

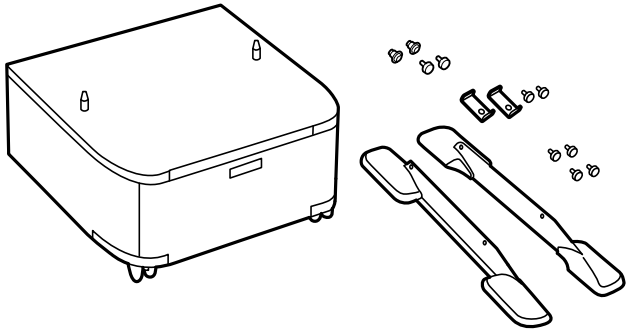

4. Place the cabinet on a flat surface and lock the front casters.

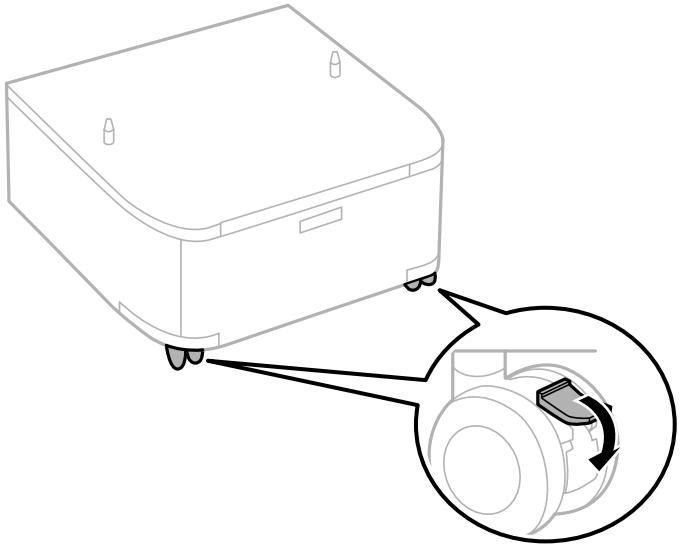

5. Attach and secure the stands to the cabinet with the included screws.

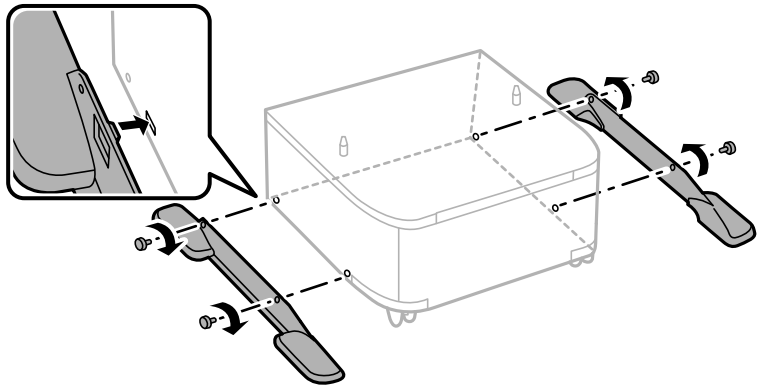

**Caution:** Make sure the stands are securely attached or the product may fall over.

6. Remove the output tray and paper cassette from the product.

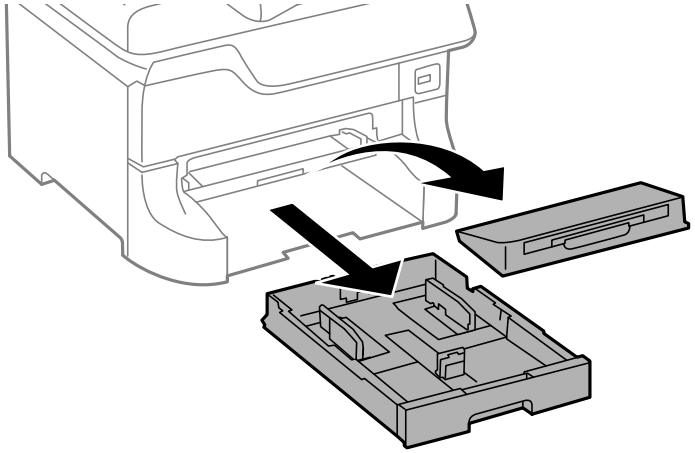

**Note:** If you installed the optional paper cassette unit, remove the paper cassette from the optional cassette unit instead.

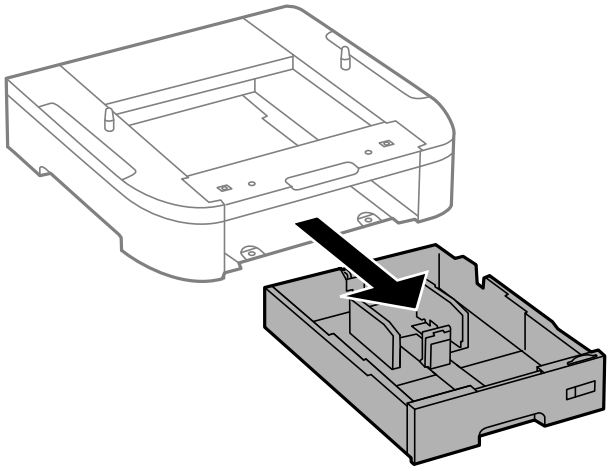

7. Lift up your product and gently lower it onto the cabinet with the corners aligned. Secure the product to the cabinet with the included screws.

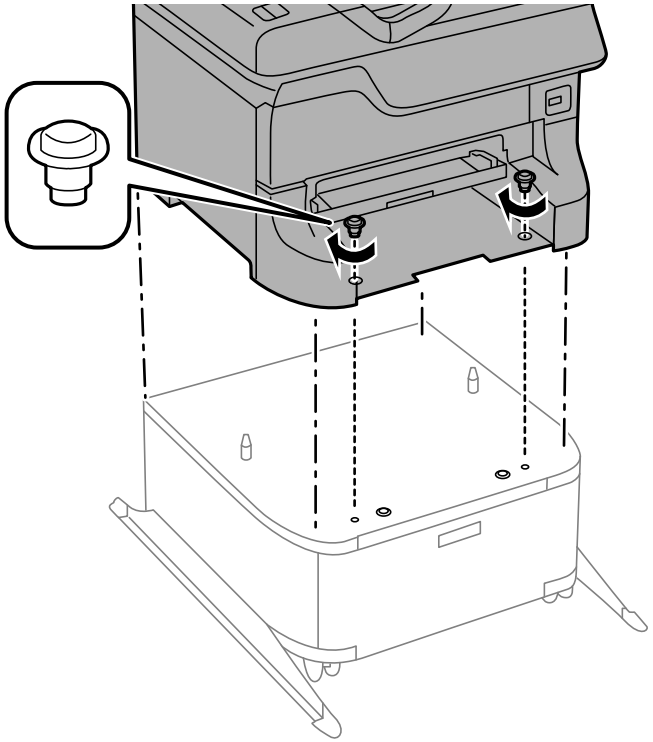

**Warning:** To lift the product, have two or more people hold it as shown here. Lifting from other areas may cause the product to fall or cause you to pinch your fingers when placing the product down.

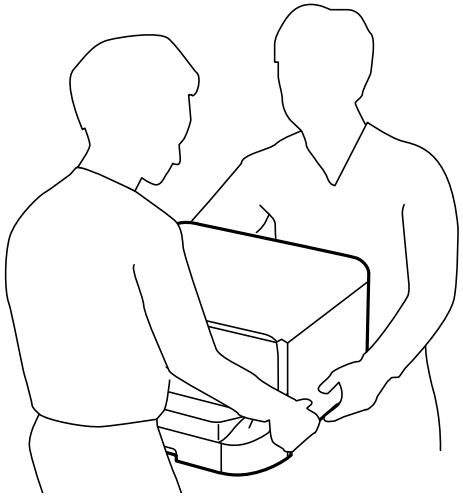

**Note:** Secure the optional cassette to the cabinet as shown here.

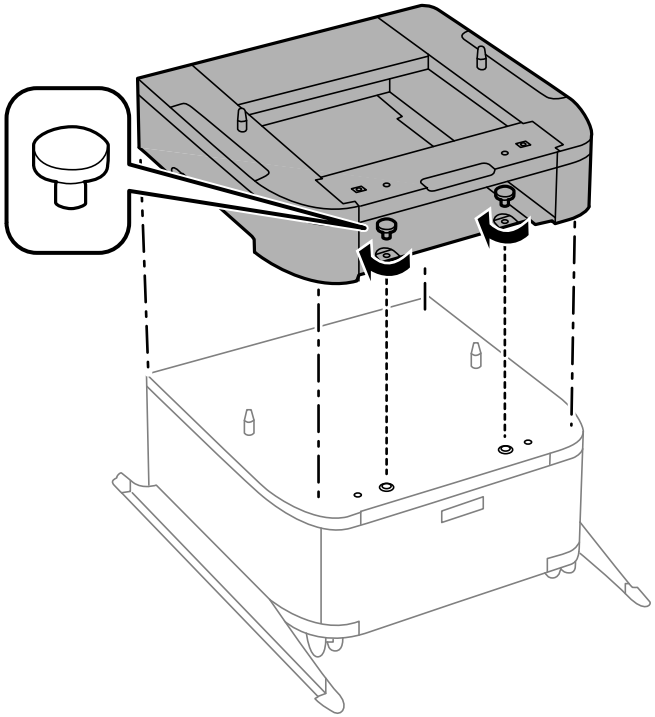

8. Secure the back of the product or paper cassette unit to the cabinet using the included brackets and screws.

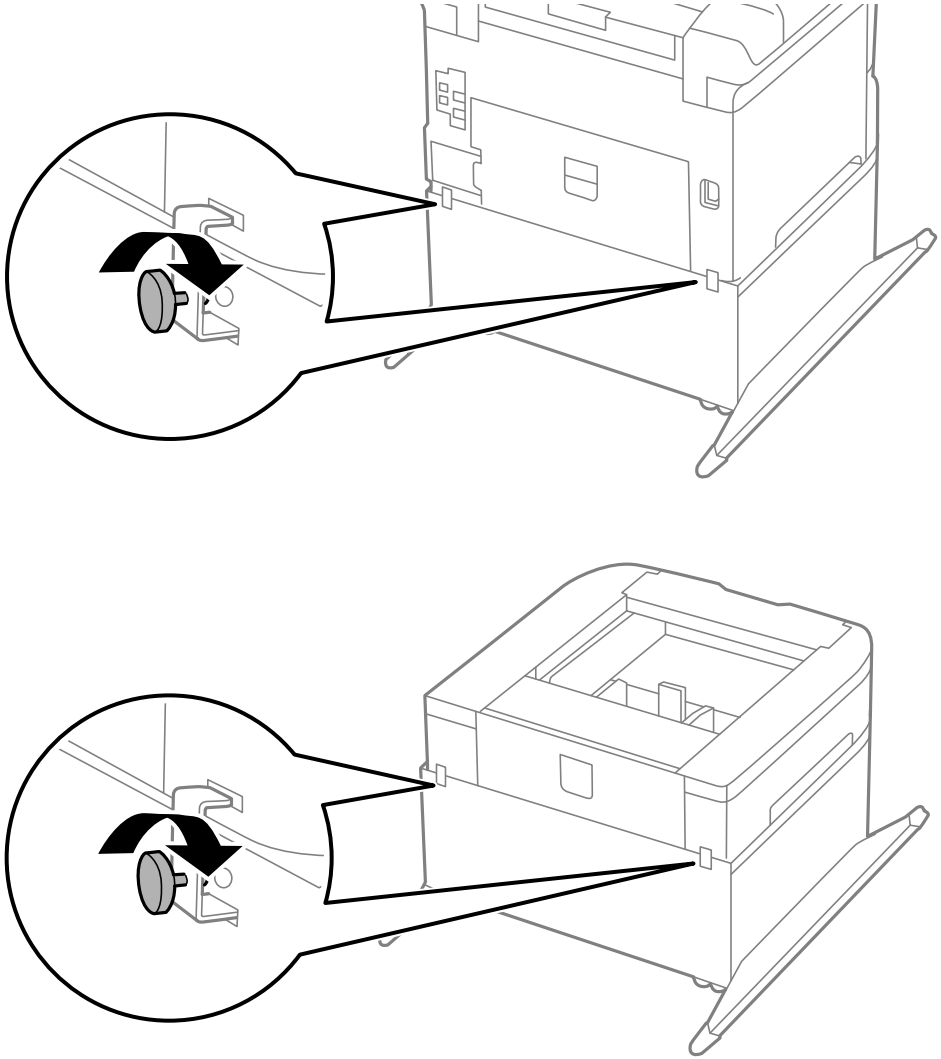

9. Insert the paper cassette you removed and attach the output tray.
10. Connect the power cord and other connection cables, then plug in the product.

**Parent topic:** Installing the Optional Cabinet and Paper Cassettes

## Installing the Optional Paper Cassette Units

You can install up to three optional paper cassette units to provide more paper capacity. If you are using the optional cabinet, install the cabinet under the bottom of the cassette unit first.

1. Turn off the product, and unplug the power cord and any connected cables.

   **Warning:** To avoid electric shock, make sure you unplug the power cord.

2. Uninstall any optional cassette units already installed on the product.

   **Note:** To uninstall any optional cassette units, turn off the product, unplug the power cord, disconnect any cables, and follow the rest of these instructions in reverse.

3. Remove the paper cassette unit from its packaging and remove any protective materials.
4. Make sure you have all the items shown here:

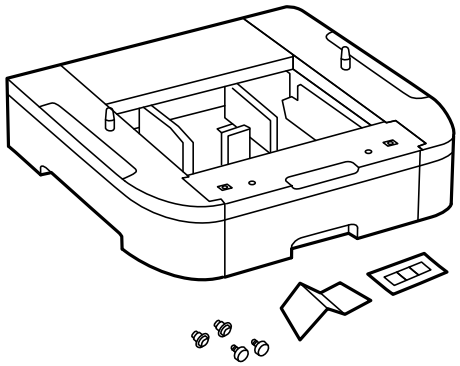

5. Remove the output tray and paper cassette from the product.

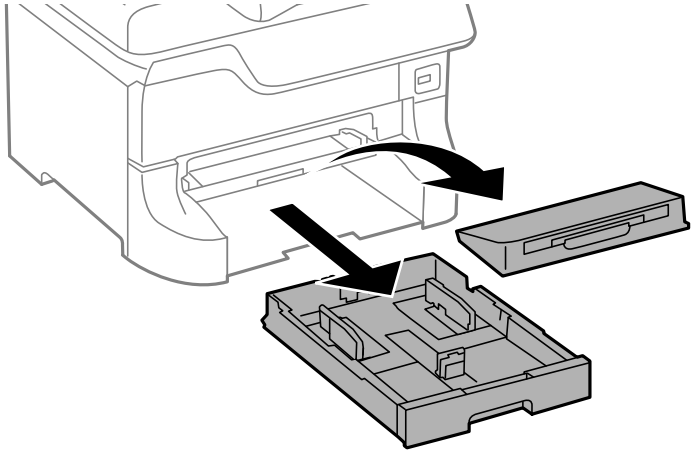

6. Remove the paper cassette from the optional paper cassette unit.

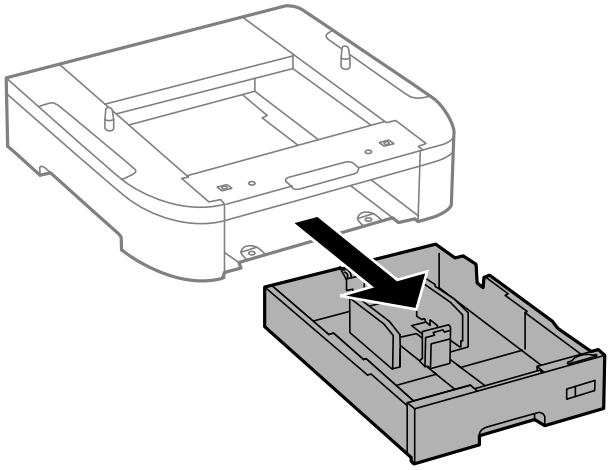

7. Stack all optional paper cassette units on top of each other and secure them to each other with the included screws.

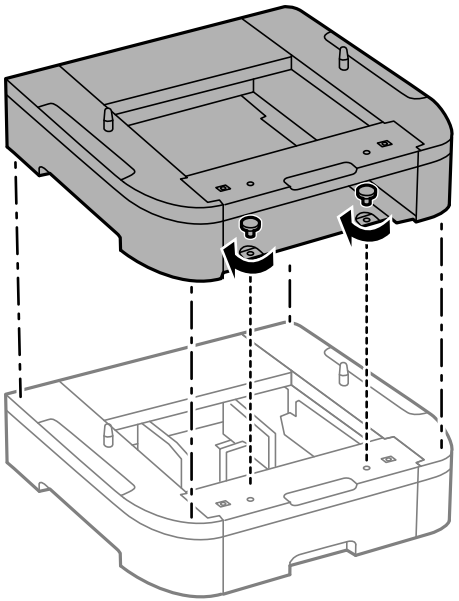

8. Lift up your product and gently lower it onto the paper cassette unit with the corners aligned. Secure the product to the paper cassette unit with the included screws using a screw driver.

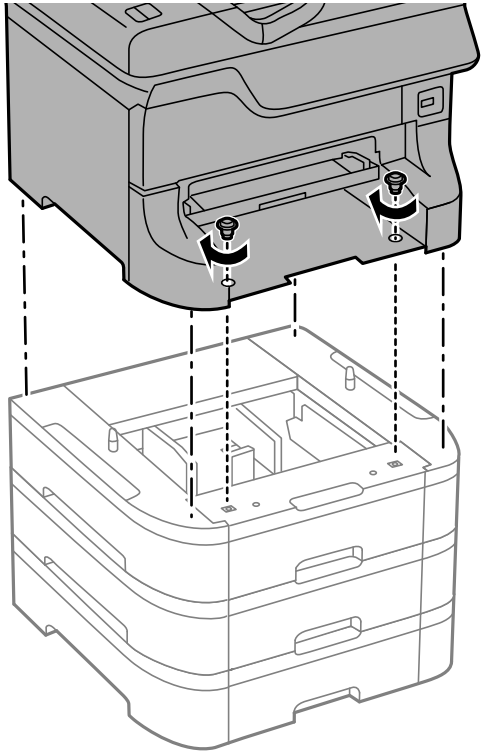

**Warning:** To lift the product, have two people hold it as shown here. Lifting from other areas may cause the product to fall or cause you to pinch your fingers when placing the product down.

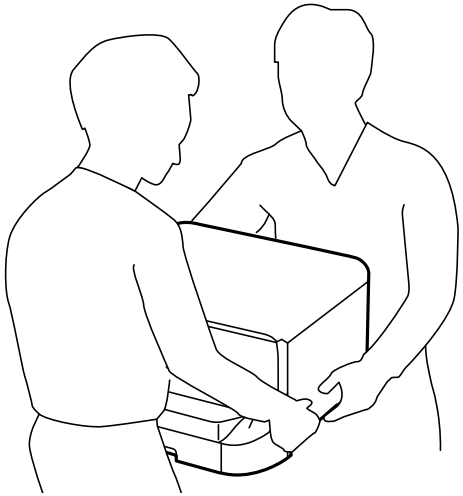

9. Secure the back of the paper cassette units to each other and to the product using the included brackets and screws.

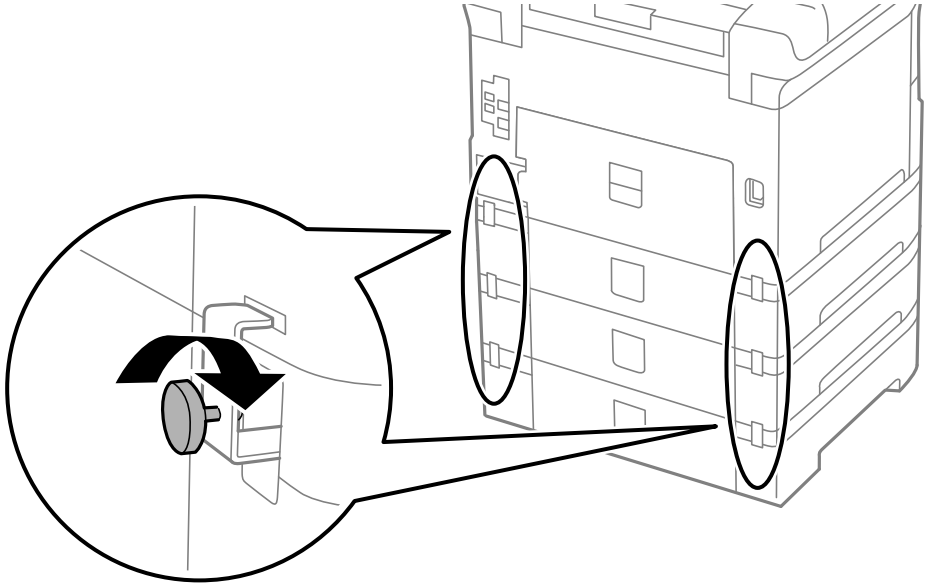

10. Insert a label into the holder indicating the paper size to be loaded in the paper cassette.

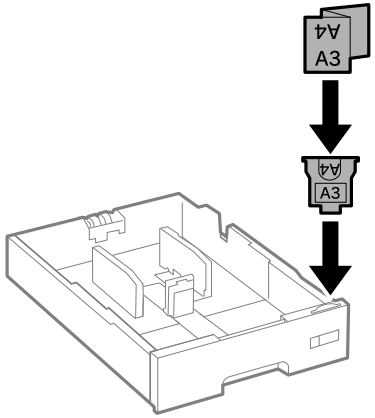

11. Place the correct sticker on the cassette unit to indicate the cassette number.

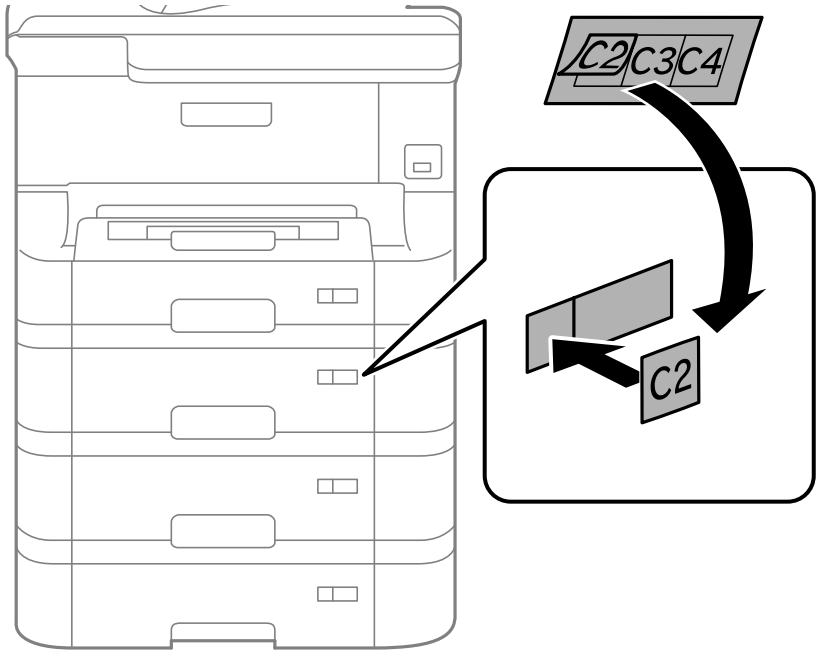


12. Connect the power cord and other connection cables, then plug in the product.
13. Turn on the product.
14. Pull out and reinsert the paper cassette in the optional paper cassette unit to confirm the cassette unit is displayed on the **Paper Setup** screen.
15. Enable the optional paper cassette units in the printer software.

Enabling the Optional Paper Cassettes - Windows
Enabling the Optional Paper Cassettes - OS X

**Parent topic:** Installing the Optional Cabinet and Paper Cassettes

**Related tasks**

Enabling the Optional Paper Cassettes - Windows
Synchronizing Printer Settings - Epson Universal Print Driver - Windows
Enabling the Optional Paper Cassettes - PostScript Printer Software - Windows

Enabling the Optional Paper Cassettes - OS X
Enabling the Optional Paper Cassettes - PostScript Printer Software - OS X

## Enabling the Optional Paper Cassettes - Windows

You need to enable the optional paper cassette units before you can use them with the printer software.

**Note:** If you are using the Epson Universal Print Driver or PostScript (PS3) printer software, see the sections covering that software in this manual to enable the optional cassette units.

1. Do one of the following:
   - **Windows 8.x:** Navigate to the **Apps** screen and select **Control Panel** > **Hardware and Sound** > **Devices and Printers**. Right-click your product name and select **Printer properties**.
   - **Windows 7:** Click and select **Devices and Printers**. Right-click your printer name and select **Printer properties**.
   - **Windows Vista:** Click and select **Control Panel**. Click **Printer** under **Hardware and Sound**, then right-click your printer name and select **Properties**.
   - **Windows XP:** Click **Start** and select **Printers and Faxes**. Right-click your product name and select **Properties**.
2. Click the **Optional Settings** tab.

You see a window like this:

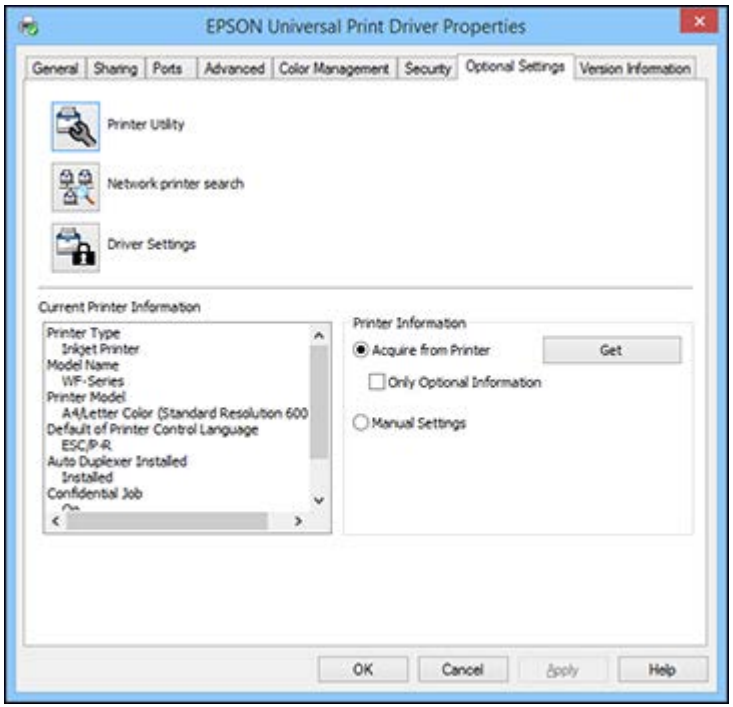


3. Make sure **Acquire from Printer** is selected, then click **Get**.

   The optional paper sources are listed in the Current Printer Information section.

4. Click **OK**.

The optional paper cassettes are now enabled.

**Parent topic:** Installing the Optional Paper Cassette Units

**Related tasks**

Synchronizing Printer Settings - Epson Universal Print Driver - Windows

Enabling the Optional Paper Cassettes - PostScript Printer Software - Windows

## Enabling the Optional Paper Cassettes - OS X

You need to enable the optional paper cassette units before you can use them with the printer software.

**Note:** If you are using the PostScript (PS3) printer software, see the section covering that software in this manual to enable the optional cassette units.

1. In the Apple menu or the Dock, select **System Preferences**.
2. Select **Print & Fax**, **Print & Scan**, or **Printers & Scanners**, select your product, and select **Options & Supplies**.
3. Select **Driver** or **Options**.

   You see a screen like this:

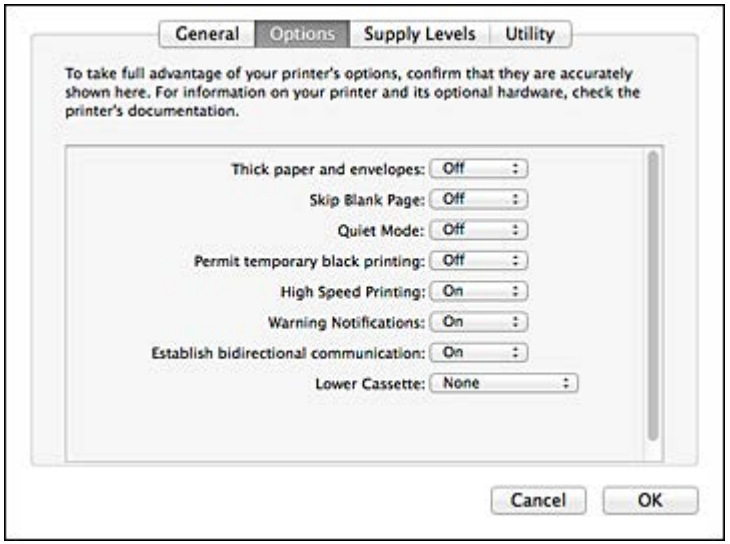


4. Select the number of optional cassette units installed for the **Lower Cassette** setting.
5. Click **OK**.

The optional paper cassettes are now enabled.

**Parent topic:** Installing the Optional Paper Cassette Units

**Related tasks**

Enabling the Optional Paper Cassettes - PostScript Printer Software - OS X

# Placing Originals on the Product

Follow the instructions here to place your original documents or photos on the product.

**Caution:** Do not place anything on top of your product or use its cover as a writing surface to avoid damaging it.

Placing Originals on the Scanner Glass
Placing Originals in the Automatic Document Feeder

## Placing Originals on the Scanner Glass

You can place originals up to this size on the scanner glass: A3 (11.7 × 16.5 inches [297 × 420 mm]).

1. Open the document cover.
2. Place your original facedown on the scanner glass with the top facing into the corner. Slide the original to the edges of the indicated corner.

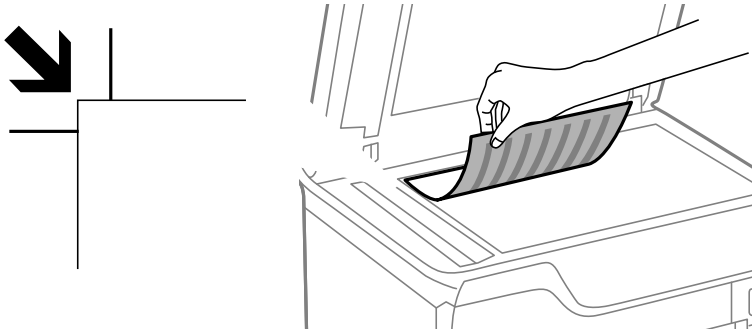

**Note:** You can place multiple originals on the scanner glass. Just make sure they are at least 0.8 inch (20 mm) away from each other.

3. Close the document cover gently to keep your original in place.

**Parent topic:** Placing Originals on the Product

**Related topics**

Copying
Scanning
Faxing

# Placing Originals in the Automatic Document Feeder

You can place multi-page original documents in the Automatic Document Feeder (ADF).You can also use the ADF to scan both sides of a 2-sided document. Make sure the originals meet the Automatic Document Feeder specifications before loading them.

**Caution:** Make sure your originals are not creased or folded, and do not contain holes, staples, tape, or other materials that could obstruct the feeder.

1. Slide the ADF edge guide outward.

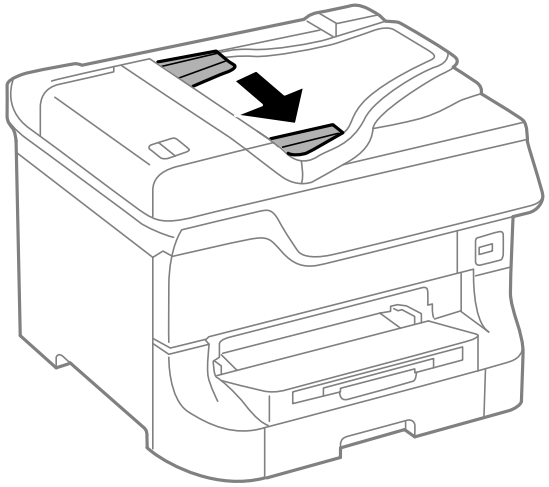

2. Fan your stack of originals and tap them gently on a flat surface to even the edges.

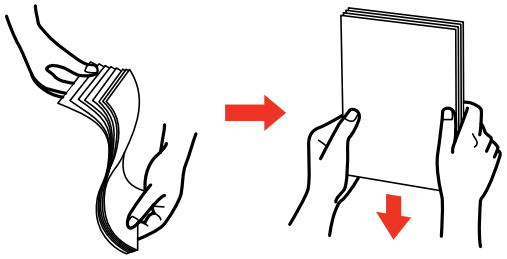

3. Insert the originals into the ADF faceup and top-edge first.

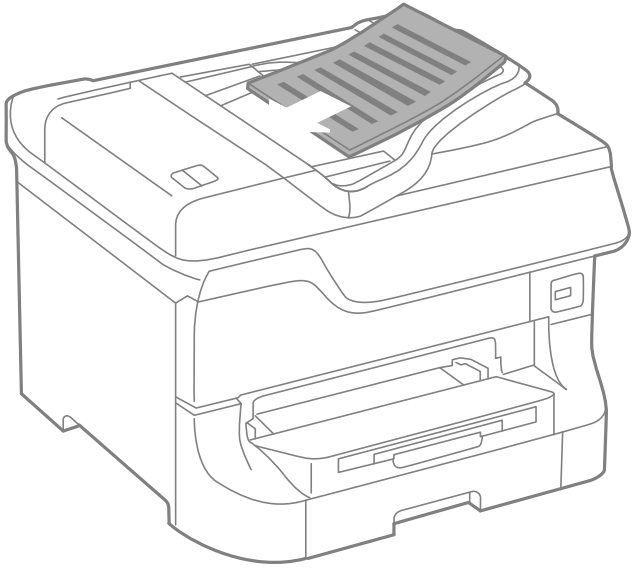

The **ADF** icon on the control panel lights up.

4. Slide the ADF edge guide against the originals, but not too tightly.

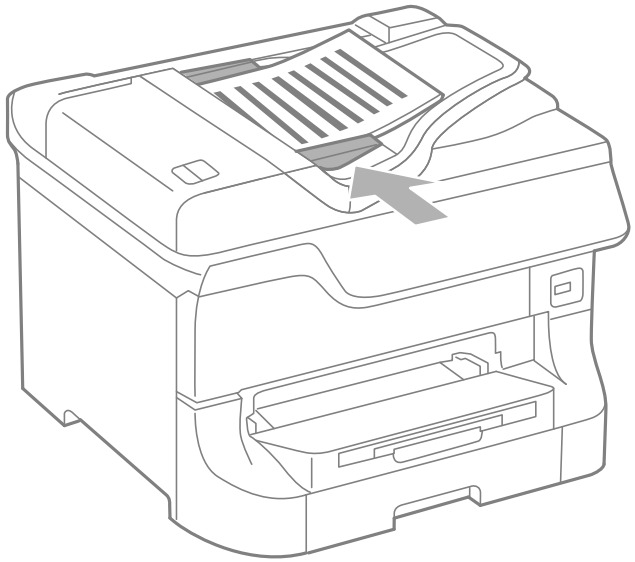

**Parent topic:** Placing Originals on the Product

**Related references**

Automatic Document Feeder (ADF) Specifications

**Related topics**

Copying
Scanning
Faxing

# Copying

See the information here to copy documents or photos using your product.

**Note:** Copies may not be exactly the same size as your originals.

Copying Documents or Photos
Copying Options

## Copying Documents or Photos

You can copy documents or photos onto various sizes and types of paper, including Epson special papers.

1. Place your original document or photo on the scanner glass, or place multi-page documents in the ADF.
2. Load the paper you want to print on.
3. Press the home button, if necessary.
4. Select **Copy**.

   You see a screen like this:

5. To print more than one copy, press a number key on the product's control panel, or select **copies** and use the displayed keypad to enter the number of copies.
6. Change any of the displayed settings as necessary.

7. Select **Settings** to view and change additional copy settings, if necessary. Then press the back button
8. Select **Preview** to preview your copy on the LCD screen.
9. Select **Preset** to save your copy settings.

   **Note:** Presets can be locked by an administrator. If you can't access or change this setting, contact your administrator for assistance.

10. When you are ready to copy, press one of the buttons.

    **Note:** To cancel printing, press the **Stop** button or select **Cancel**.

**Parent topic:** Copying

**Related references**

Available Epson Papers

Copying Options

**Related tasks**

Using Presets

**Related topics**

Loading Paper

Placing Originals on the Product

# Copying Options

Select the copying options you want to use for your copies.

**Note:** Not all options or settings may be available, depending on other copying settings.

| Copying option | Available settings | Description |
|---|---|---|
| **Layout** | **With Border** | Leaves a small margin around the image or document |
| | **2-up Copy** | Copies multiple page documents onto one sheet. Also, select **Settings** and change the **Document Orientation** and **Layout Order** settings as necessary. |
| | **4-up** | |
| | **ID Card** | Copies both sides of an ID card onto one side of a sheet of paper |
| | **Split Pages** | Copies two facing pages of a book onto separate sheets of paper. |
| **Document Size** | Various sizes | Select the document size of your original |
| **Paper Source** | Various sources | Select the paper source that you want to use. If you select **Auto**, paper is fed automatically depending on the paper settings you selected for the paper sources. |
| **Zoom** | **Custom Size** | Automatically sizes the image by the percentage you select |
| | **Actual Size** | Copies at 100% size |
| | **Auto Fit Page** | Automatically sizes the image to fit the paper size you selected |
| | **Letter->4x6in** and other conversions | Automatically converts from one size to another |
| **2-Sided** | **Off** | Select to make 2-sided copies. When you select **1>2-Sided** or **2>1-Sided**, also select **Advanced** and select the binding edge for your originals or copies. |
| | **2>2-Sided** | |
| | **1>2-Sided** | |
| | **2>1-Sided** | |
| **Document Orientation** | **Portrait** | Specifies the orientation of your originals |
| | **Landscape** | |
| **Quality** | **Text** | Specifies the document type of your originals and adjusts the quality of your copies |
| | **Text(Best)** | |
| | **Text & Image** | |
| | **Text & Image(Best)** | |
| | **Photo** | |

| Copying option | Available settings | Description |
|---|---|---|
| **Density** | Varying levels | Adjusts the lightness or darkness of copies |
| **Remove Shadow** | **Off** | Select **On** to erase the shadows that appear in the center of a document when copying a book or that appear around a document when copying thick paper |
| | **On** | |
| **Remove Punch Holes** | **Off** | Select **On** to erase the binding holes on a document |
| | **On** | |
| **Collate Copy** | **Off** | Select **On** to print multiple copies of a multi-page document both in order and sorted into sets |
| | **On** | |
| **Mixed Documents** | **On** | Select **On** to copy originals of varying sizes in their original sizes. |
| | **Off** | |
| **Dry Time** | **Standard** | Select to adjust the drying time for 2-sided copies, if smudges or marks appear on the front of the paper when you print on the second side |
| | **Long** | |
| | **Longer** | |
| **Advanced Settings** | Various settings | Select advanced settings such as **Saturation** and **Sharpness** |

**Parent topic:** Copying

# Printing from a Computer

Before printing from your computer, make sure you have set up your product and installed its software as described on the *Start Here* sheet.

**Note:** If you have an Internet connection, it is a good idea to check for updates to your product software on Epson's support website. If you see a Software Update screen, select **Enable automatic checking** and click **OK**. The update scans your system to see if you have the latest product software. Follow the on-screen instructions.

Printing with Windows
Printing with OS X
Printing with the Epson Universal Print Driver - Windows
Printing with the PostScript (PS3) Printer Software - Windows
Printing with the PostScript (PS3) Printer Software - OS X
Cancelling Printing Using a Product Button

## Printing with Windows

You can print with your product using any Windows printing program, as described in these sections.

Selecting Basic Print Settings - Windows
Selecting Double-sided Printing Settings - Windows
Selecting Additional Layout and Print Options - Windows
Selecting a Printing Preset - Windows
Selecting Extended Settings - Windows
Printing Your Document or Photo - Windows
Locking Printer Settings - Windows
Entering a User ID and Password for Printing
Selecting Default Print Settings - Windows
Changing Automatic Update Options

**Parent topic:** Printing from a Computer

### Selecting Basic Print Settings - Windows

Select the basic settings for the document or photo you want to print.

1. Open a photo or document for printing.
2. Select the print command in your application.

   **Note:** You may need to select a print icon on your screen, the **Print** option in the **File** menu, or another command. See your application's help utility for details.

3. If necessary, select your product name as the printer you want to use.

   **Note:** You may also need to select **Properties** or **Preferences** to view your print settings.

   You see the Main tab of your printer settings window:

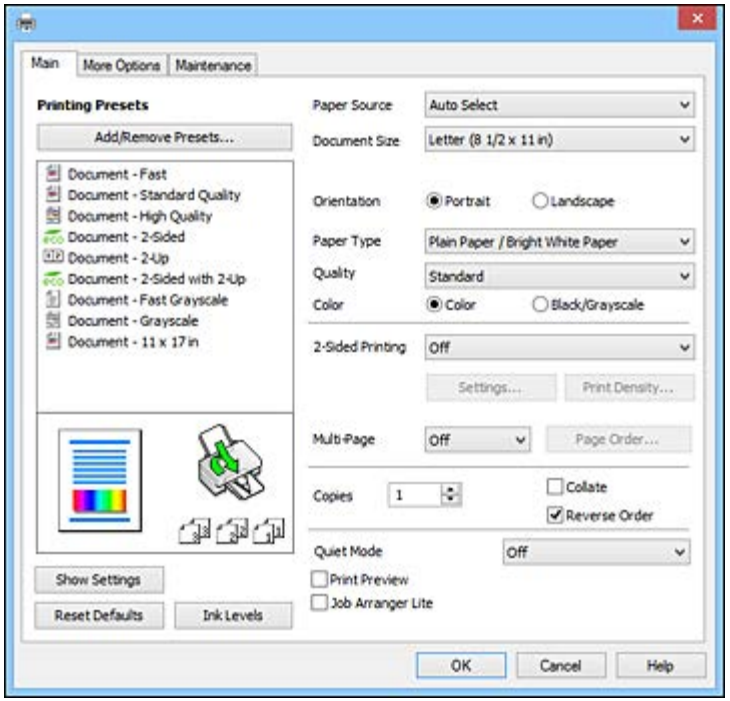


4. For the **Paper Source** setting, select where you loaded the paper you want to print on.
5. Select the size of the paper you loaded as the **Document Size** setting.

6. Select the orientation of your document.

   **Note:** If you are printing an envelope, select **Landscape**.

7. Select the type of paper you loaded as the **Paper Type** setting.

   **Note:** The setting may not exactly match the name of your paper. Check the paper type settings list for details.

8. Select the **Quality** setting that matches the print quality you want to use.
9. Select a Color option:
   - To print a color document or photo, select the **Color** setting.
   - To print text and graphics in black or shades of gray, select the **Black/Grayscale** setting.
10. To print on both sides of the paper, select the **2-Sided Printing** checkbox and select the options you want.
11. To print multiple pages on one sheet of paper, or print one image on multiple sheets of paper, select one of the settings in the **Multi-Page** menu and select the printing options you want.
12. To print multiple copies and arrange their print order, select the **Copies** options.
13. To preview your job before printing, select **Print Preview**.
14. To save your print job as a project that can be modified and combined with other print jobs, select **Job Arranger Lite**.
15. To reduce noise during printing when you select **Plain Paper/Bright White Paper**, select **On** in the Quiet Mode menu.

Paper Source Options - Windows
Print Quality Options - Windows
Multi-Page Printing Options - Windows

**Parent topic:** Printing with Windows

**Related references**

Paper or Media Type Settings - Printing Software

**Related tasks**

Selecting Double-sided Printing Settings - Windows
Printing Your Document or Photo - Windows
Entering a User ID and Password for Printing

## Paper Source Options - Windows

You can select any of the available options in the Paper Source menu to print on the paper loaded in that source.

**Note: Paper Cassette 2** through **Paper Cassette 4** are available only if you have installed the optional cassettes.

**Auto Select**
Automatically selects the paper source based on the selected paper size.

**Paper Cassette 1**
Selects the paper in cassette 1 as the paper source.

**Paper Cassette 2**
Selects the paper in cassette 2 as the paper source.

**Paper Cassette 3**
Selects the paper in cassette 3 as the paper source.

**Paper Cassette 4**
Selects the paper in cassette 4 as the paper source.

**Rear Paper Feed Slot**
Selects the paper in the rear feed slot as the paper source.

**Front Paper Feed Slot**
Selects the paper in the front feed slot as the paper source.

**Parent topic:** Selecting Basic Print Settings - Windows

## Print Quality Options - Windows

You can select any of the available Quality options to fine-tune the quality of your print. Some settings may be unavailable, depending on the paper type and border setting you have chosen.

**Draft**
For draft printing on plain paper.

**Standard**
For everyday text and image printing.

**Standard - Vivid**
For text and graphics with good quality and print speed.

**High**
For photos and graphics with high print quality.

**More Settings**
Opens a window that lets you choose among levels of speed and quality.

**Parent topic:** Selecting Basic Print Settings - Windows

### Multi-Page Printing Options - Windows

You can select any of the available options in the Multi-Page menu to set up your multi-page print job.

**2-Up and 4-Up**
Prints 2 or 4 pages on one sheet of paper. Click the **Page Order** button to select page layout and border options.

**2×1 Poster, 2×2 Poster, 3×3 Poster, 4×4 Poster**
Prints one image on multiple sheets of paper to create a larger poster. Click the **Settings** button to select image layout and guideline options.

**Parent topic:** Selecting Basic Print Settings - Windows

## Selecting Double-sided Printing Settings - Windows

You can print on both sides of the paper by selecting one of the **2-Sided Printing** options on the Main tab.

**Note:** Some options may be pre-selected or unavailable, depending on other settings you have chosen or if you are accessing the product over a network.

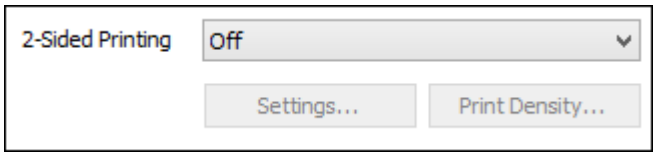


1. Select one of the following options for **2-Sided Printing**:
   - **Auto (Long-edge binding)** to print your double-sided print job by automatically flipping the paper on the long edge.
   - **Auto (Short-edge binding)** to print your double-sided print job by automatically flipping the paper on the short edge.
   - **Manual (Long-edge binding)** to print your double-sided print job by printing one side and prompting you to flip the paper over on the long edge to print the other side (recommended for paper types that do not support automatic duplexing).

- **Manual (Short-edge binding)** to print your double-sided print job by printing one side and prompting you to flip the paper over on the short edge to print the other side (recommended for paper types that do not support automatic duplexing).

2. Click the **Settings** button.

   You see this window:

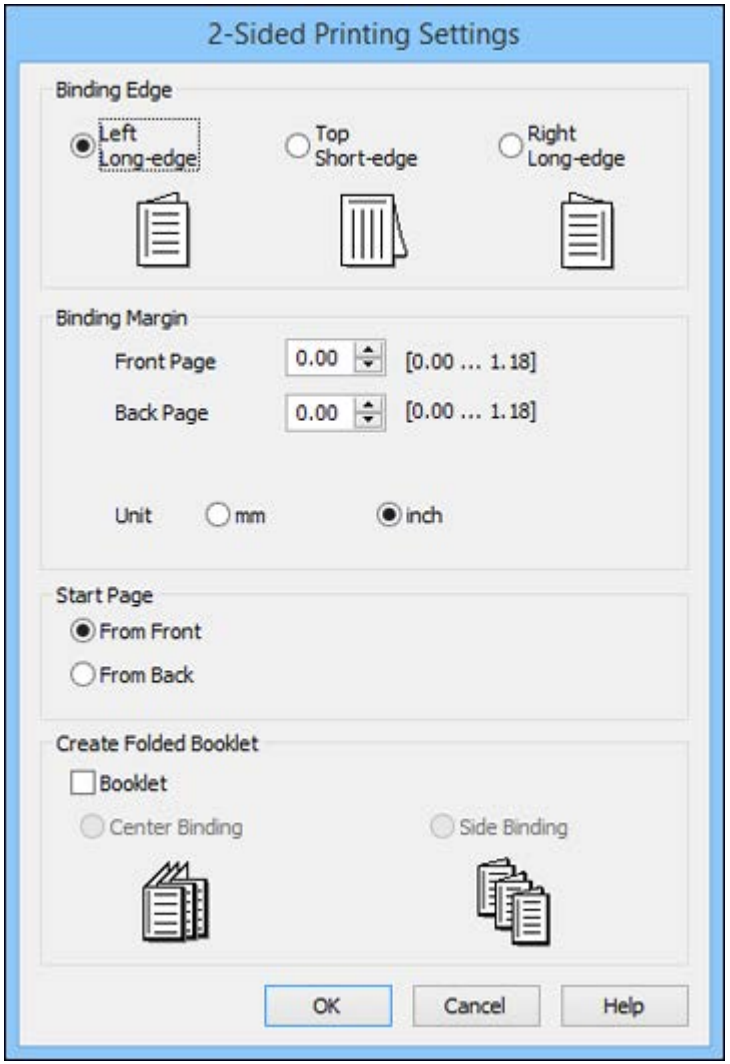

3. Select the double-sided printing options you want to use.
4. Click **OK** to return to the Main tab.
5. Click the **Print Density** button.

   You see this window:

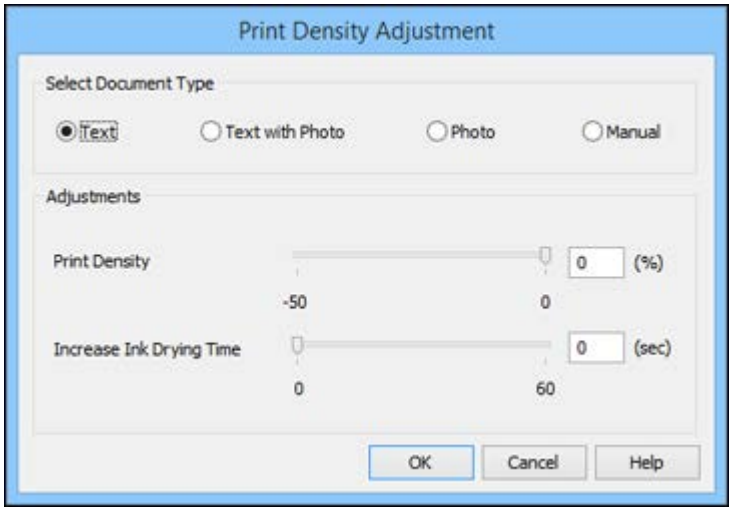


6. Select the type of document you are printing as the Document Type setting. The software automatically sets the **Adjustments** options for that document type.
7. If necessary, select the **Adjustments** options you want to use.
8. Click **OK** to return to the Main tab.
9. Print a test copy of your double-sided document to test the selected settings.
10. Follow any instructions displayed on the screen during printing.

Double-sided Printing Options - Windows
Print Density Adjustments - Windows

**Parent topic:** Printing with Windows

**Related tasks**

Selecting Basic Print Settings - Windows

## Double-sided Printing Options - Windows

You can select any of the available options on the 2-Sided Printing Settings window to set up your double-sided print job.

**Binding Edge Options**
Select a setting that orients double-sided print binding in the desired direction.

**Binding Margin Options**
Select options that define a wider margin to allow for binding.

**Start Page**
Selects whether printing starts on the front or back page.

**Create Folded Booklet Options**
Select the **Booklet** checkbox and a binding option to print double-sided pages as a booklet.

**Parent topic:** Selecting Double-sided Printing Settings - Windows

## Print Density Adjustments - Windows

You can select any of the available options on the Print Density Adjustment window to adjust the print quality of your double-sided print job.

**Print Density**
Sets the level of ink coverage for double-sided printing.

**Increase Ink Drying Time**
Sets the amount of time required for drying ink after printing on one side of the paper before printing the other side in double-sided printing to prevent ink smearing.

**Parent topic:** Selecting Double-sided Printing Settings - Windows

## Selecting Additional Layout and Print Options - Windows

You can select a variety of additional layout and printing options for your document or photo on the More Options tab.

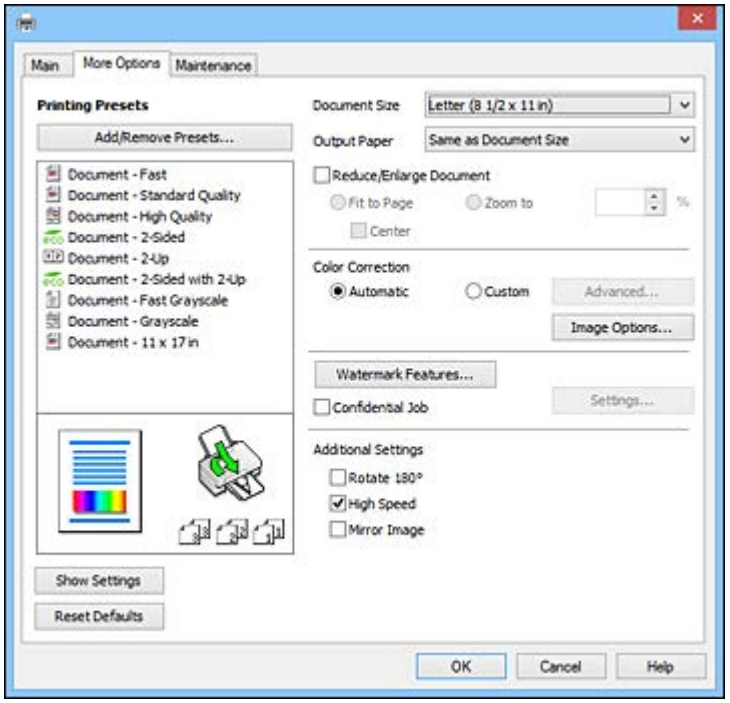


1. To change the size of your printed document or photo, select the **Reduce/Enlarge Document** checkbox and select one of these sizing options:
   - Select the **Fit to Page** option to size your image to fit the paper you loaded. Select the size of the your document or photo as the **Document Size** setting, and the size of your paper as the **Output Paper** setting. If you want to center your image on the paper, select the **Center** option.
   - Select the **Zoom to** option to reduce or enlarge your document or photo by a specific percentage. Select the percentage in the **%** menu.
2. Select one of the following Color Correction options:
   - Select **Automatic** to automatically adjust the sharpness, brightness, contrast, and color saturation for your image.

- Select **Custom** and click the **Advanced** button to manually adjust the color correction settings or turn off color management in your printer software.
- Select **Image Options** to access additional settings for improving printed images.

  **Note:** You can also select **Color Universal Print** settings.

3. To add the following features, click the **Watermark Features** button:
   - **Anti-Copy Pattern**: adds a watermark that only appears when your printout is copied.
   - **Watermark**: adds a visible watermark to your printout.

     **Note:** Click the **Add/Delete** button to create your own watermark, and click the **Settings** button to customize the watermark.

   - **Header/Footer**: adds information such as the date and time to the top or bottom of your printout.

     **Note:** Click the **Settings** button to customize the text and location of the header or footer.

4. To add a password to your print job, select the **Confidential Job** checkbox, then enter a password. Confidential jobs are stored in the product's memory without being printed. To print the job, enter the password for the confidential job on the product's control panel.

   **Note:** Confidential print jobs are cleared from the product's memory after printing.

5. Select any of the Additional Settings options to customize your print.

Custom Color Correction Options - Windows
Image Options and Additional Settings - Windows
Header/Footer Settings - Windows

**Parent topic:** Printing with Windows

**Related tasks**

Printing Your Document or Photo - Windows

## Custom Color Correction Options - Windows

You can select any of the available options in the Color Correction window to customize the image colors for your print job.

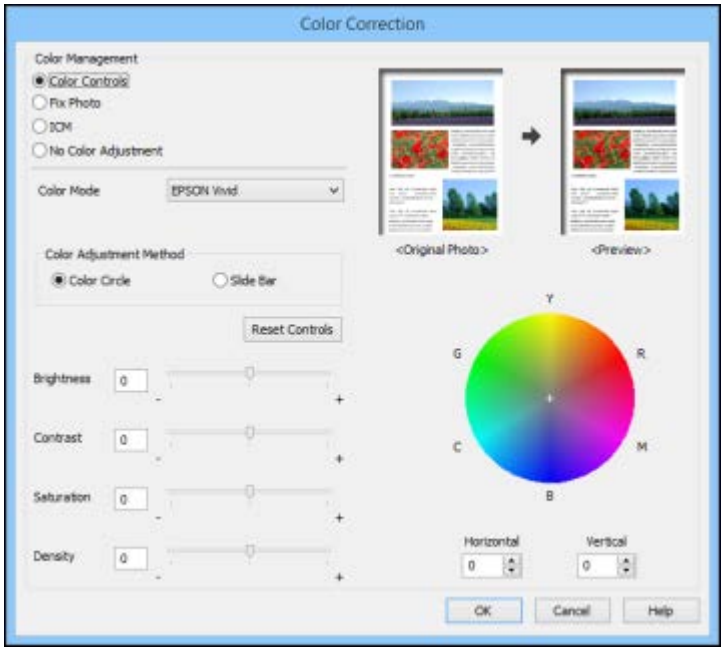


### Color Controls

Lets you select a **Color Mode** setting, individual settings for **Brightness**, **Contrast**, **Saturation**, and **Density**, and individual color tones. Depending on the selected color mode, you can also adjust the midtone density using the **Gamma** setting.

### Fix Photo

Improves the color, contrast, and sharpness of flawed photos.

**Note:** Fix Photo uses a sophisticated face recognition technology to optimize photos that include faces. For this to work, both eyes and the nose must be visible in the subject's face. If your photo includes a face with an intentional color cast, such as a statue, you may want to turn off **Fix Photo** to retain the special color effects.

**ICM**
Lets you manage color using installed color printing profiles.

**No Color Adjustment**
Turns off color management in your printer software so you can manage color using only your application software.

**Parent topic:** Selecting Additional Layout and Print Options - Windows

## Image Options and Additional Settings - Windows

You can select any of the Image Options and Additional Settings to customize your print. Some options may be pre-selected or unavailable, depending on other settings you have chosen.

### Image Options

**Emphasize Text**
Adjusts the weight of printed text to increase readability.

**Emphasize Thin Lines**
Adjusts the weight of printed lines to increase visibility.

**Edge Smoothing**
Smooths jagged edges in low-resolution images such as screen captures or images from the Web.

**Fix Red-Eye**
Reduces or removes red-eye in photos.

**Print Text in Black**
Prints colored text in black.

**For Color Text**
Prints colored text on a background pattern or underlined.

**For Color Graphs and Images**
Prints colored graphics and images with overlay patterns.

**For Color Text, Graphs, and Images**
Prints colored text, graphics, and images with overlay patterns.

**Enhancement Options**
Specifies Color Universal Print enhancement settings for text, graphics, and images.

### Additional Settings Options

**Rotate 180º**
Prints the image rotated 180º from its original orientation.

**High Speed**
Speeds up printing but may reduce print quality.

**Mirror Image**
Flips the printed image left to right.

**Parent topic:** Selecting Additional Layout and Print Options - Windows

## Header/Footer Settings - Windows

You can select any of the Header/Footer Settings options to add headers or footers when you print. The items are available to print at the top or bottom of your pages, in either the left, right, or center of the page.

**Note:** These settings are not saved with your document.

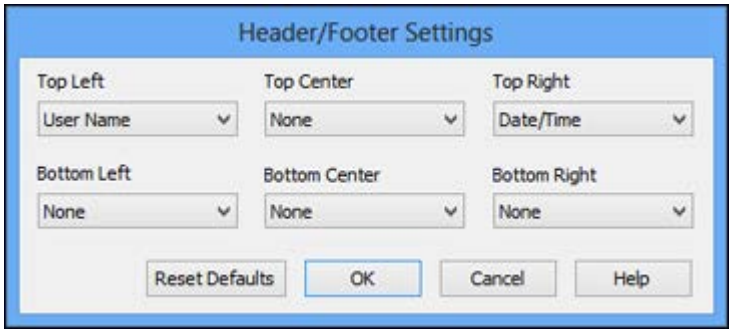


You can select to print the following information:

- User Name
- Computer Name
- Date
- Date/Time
- Collate Number (copy number)

**Note:** The user name, computer name, date, and time come from the Windows Control Panel on your computer.

**Parent topic:** Selecting Additional Layout and Print Options - Windows

## Selecting a Printing Preset - Windows

For quick access to common groups of print settings, you can select a printing preset on the Main or More Options tab.

**Note:** You can create your own preset by clicking the **Add/Remove Presets** button.

1. Click the **Main** or **More Options** tab.

   You see the available **Printing Presets** on the left:

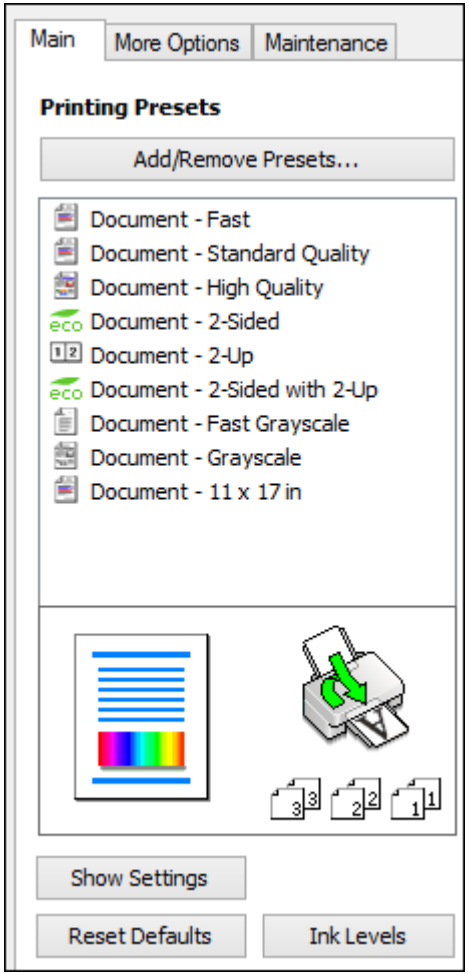

2. Place your cursor over one of the **Printing Presets** to view its list of settings.
3. Click on a preset to change its settings, or use any of the available options on the screen to control your printing presets.
4. To choose a preset for printing, select it.
5. Click **OK**.

**Parent topic:** Printing with Windows

## Selecting Extended Settings - Windows

You can select additional settings that apply to all the print jobs you send to your product.

1. Access the Windows Desktop and right-click the product icon in the Windows taskbar.
2. Select **Printer Settings**.
3. Click the **Maintenance** tab.

   You see the maintenance options:

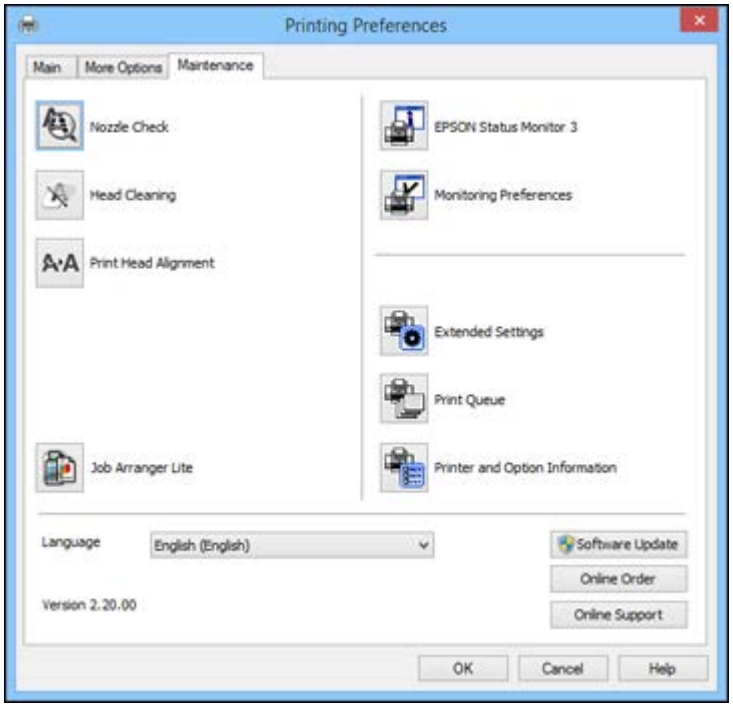

4. Click the **Extended Settings** button.

   You see this window:

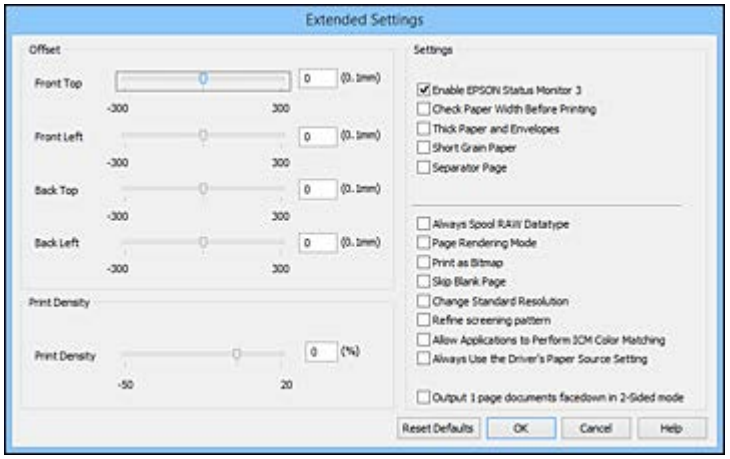


5. Select any of the extended settings to customize your print.
6. Click **OK** to close the Extended Settings window.
7. Click **OK** to close the printer software window.

Extended Settings - Windows

**Parent topic:** Printing with Windows

## Extended Settings - Windows

You can select from these settings on the Extended Settings window.

**Enable EPSON Status Monitor 3**
Enables product monitoring for ink and paper supplies and other issues.

**Check Paper Width Before Printing**
Prevents printing beyond the edges of the paper if the paper size setting is incorrect; may reduce print speed.

**Thick Paper and Envelopes**
Prevents ink from smearing when you print on envelopes or other thick paper.

**Short Grain Paper**
Prevents ink from smearing when you print on envelopes or other thick paper, and the **Thick Paper** setting does not help.

**Separator Page**
Before each document, prints a separator page containing the title, user, date, and time.

**Always Spool RAW Datatype**
Increases print speed and may solve other printing problems.

**Page Rendering Mode**
Increases print speed when printing is extremely slow or the print head stops during printing.

**Print as Bitmap**
Increases print speed when printing is extremely slow or the print head stops during printing, and other settings do not help.

**Skip Blank Page**
Ensures that your product does not print pages that contain no text or images.

**Change Standard Resolution**
Reduces the resolution of print data to correct printing problems.

**Refine screening pattern**
Prints graphics with a finer screening pattern.

**Allow Applications to Perform ICM Color Matching**
Allows applications to perform ICM color matching.

**Always Use the Driver's Paper Source Setting**
Prints using the paper source setting in the printer driver, rather than the setting in your application.

**Output 1 page documents facedown in 2-Sided mode**
Outputs single-sided pages in a 2-sided print job facedown instead of faceup.

**Parent topic:** Selecting Extended Settings - Windows

## Printing Your Document or Photo - Windows

Once you have selected your print settings, you are ready to save your settings and print.

1. Click **OK** to save your settings.

You see your application's Print window, such as this one:

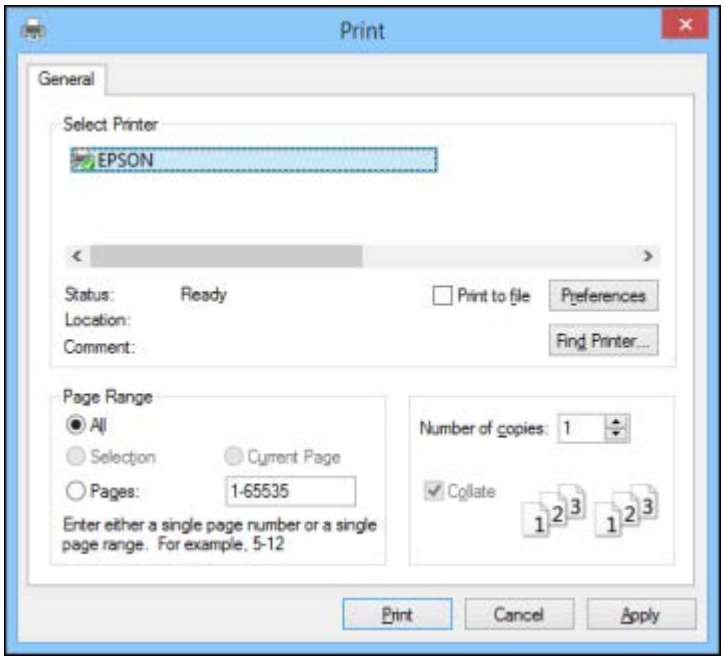


2. Click **OK** or **Print** to start printing.

**Parent topic:** Printing with Windows

## Locking Printer Settings - Windows

Administrators can lock some printer settings to prevent unauthorized changes. The following settings can be locked:

- Anti-copy pattern
- Watermark
- Header/footer
- Color printing
- 2-sided printing
- Multi-page printing

- All document settings

1. Do one of the following:
   - **Windows 8.x:** Navigate to the **Apps** screen and select **Control Panel** > **Hardware and Sound** > **Devices and Printers**. Right-click your product and select **Printer properties**.
   - **Windows 7:** Click and select **Devices and Printers**. Right-click your product and select **Printer properties**.
   - **Windows Vista:** Click and select **Control Panel**. Click **Printer** under **Hardware and Sound**, then right-click your product and select **Properties**.
   - **Windows XP:** Click **Start** and select **Printers and Faxes**. Right-click your product and select **Properties**.
2. Click the **Optional Settings** tab.

   **Note:** You can prevent access to the **Optional Settings** tab by changing the user or group permissions in the **Security** tab.

3. Click **Driver Settings**.

You see this window:

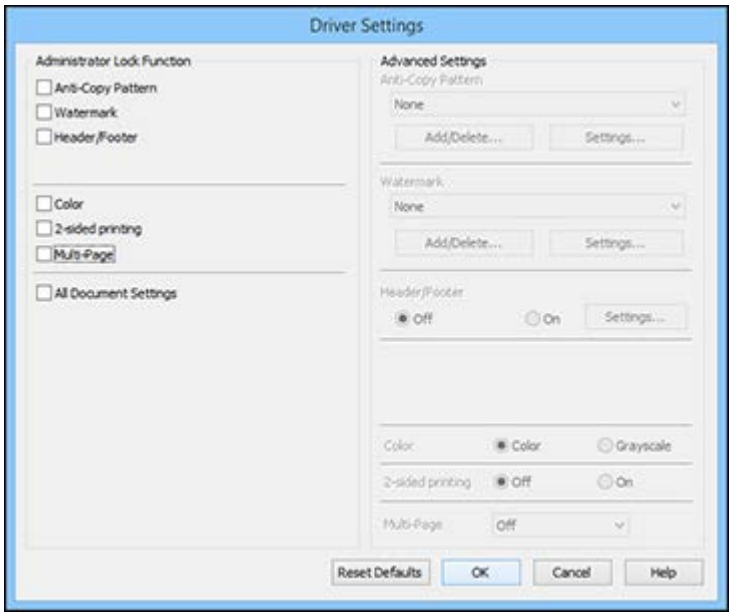


4. Select the checkbox for the function or functions you want to lock. To lock all print settings, select **All Document Settings**.
5. Under **Advanced Settings**, select the setting you want for each selected function.
6. Click **OK**.

Administrator Lock Settings

**Parent topic:** Printing with Windows

## Administrator Lock Settings

Select the settings you want to use for locking print functions.

| Printing function | Available settings | Description |
|---|---|---|
| **Anti-Copy Pattern** | Various data items | Lets you select the data to use for the pattern (or prohibit anti-copy patterns) |
| | **Add/Delete** | Lets you add (or delete) a customized anti-copy pattern |
| | **Settings** | Lets you select the arrangement, size, and other settings for the custom anti-copy pattern |
| **Watermark** | Various text watermarks | Lets you select the text for the watermark (or prohibit watermarks) |
| | **Add/Delete** | Lets you add (or delete) a customized text or image-based watermark |
| | **Settings** | |
| | | Lets you select the size, position, color and other watermark settings |
| **Header/Footer** | **Off** | Prohibits headers or footers |
| | **On** | Allows headers and footers |
| | **Settings** | Lets you select the text and position for printing headers and/or footers |
| **Color** | **Color** | Allows color printing |
| | **Grayscale** | Prints in black or shades of gray only |
| **2-sided printing** | **Off** | Allows printing on one side of the paper only |
| | **On** | Allows printing on both sides of the paper |
| **Multi-Page** | **Off** | Prohibits multi-page settings |
| | **2-Up** | Prints 2 pages on one sheet of paper |
| | **4-Up** | Prints 4 pages on one sheet of paper |

**Parent topic:** Locking Printer Settings - Windows

## Entering a User ID and Password for Printing

If Access Control is enabled on the product, a user ID and password may be required to print. You can enter the user ID and password in the printer driver.

**Note:** If you do not know the user ID or password, contact your administrator for assistance.

1. Click the **Maintenance** tab.

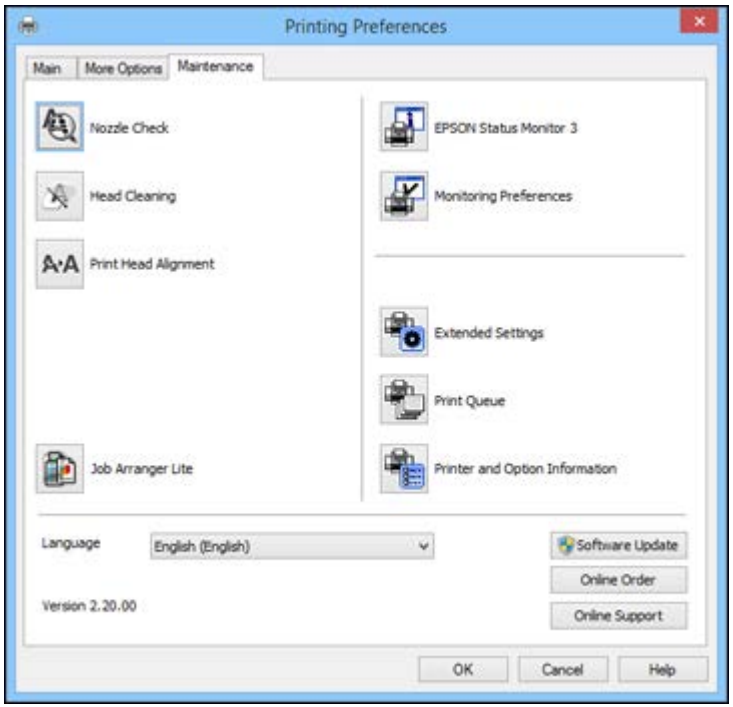


2. Click the **Printer and Option Information** button.
3. Select the **Save Access Control Settings** checkbox.
4. Click the **Settings** button.
5. Enter your user name and password.
6. Click **OK**.

**Parent topic:** Printing with Windows

## Selecting Default Print Settings - Windows

When you change your print settings in a program, the changes apply only while you are printing in that program session. If you want to change the print settings you use in all your Windows programs, you can select new default print settings.

1. Access the Windows Desktop and right-click the product icon in the Windows taskbar.
2. Select **Printer Settings**.

   You see the printer settings window:

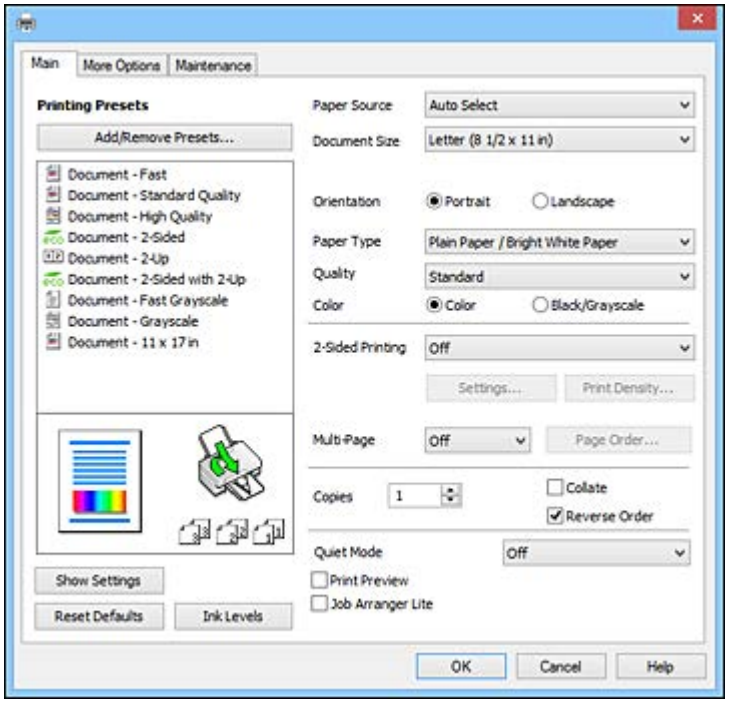


3. Select the print settings you want to use as defaults in all your Windows programs.
4. Click **OK**.

These settings are now the defaults selected for printing. You can still change them as needed for printing in any program session.

Changing the Language of the Printer Software Screens

**Parent topic:** Printing with Windows

## Changing the Language of the Printer Software Screens

You can change the language used on the Windows printer software screens.

1. Access the Windows Desktop and right-click the product icon in the Windows taskbar.

2. Select **Printer Settings**.

   You see the printer settings window.

3. Click the **Maintenance** tab.

   You see the maintenance options:

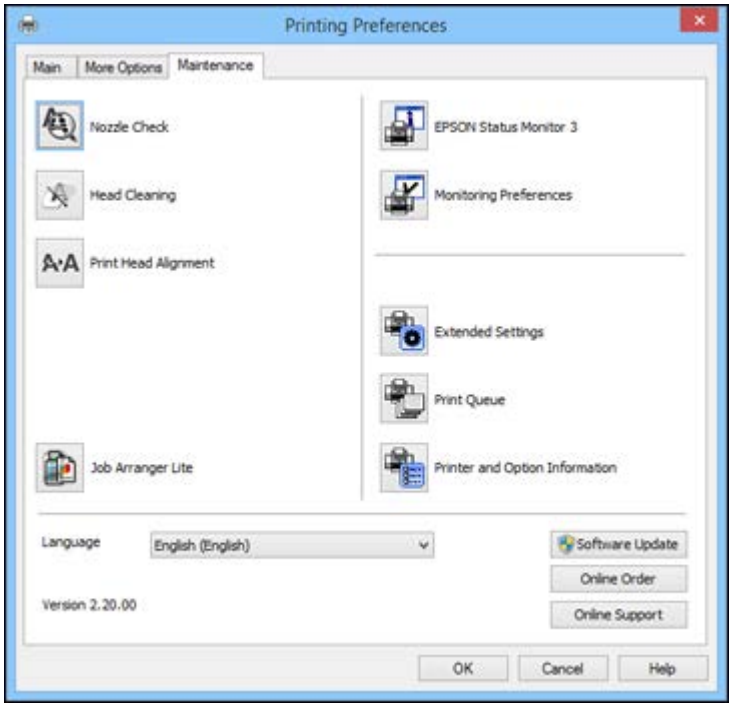


4. Select the language you want to use as the **Language** setting.
5. Click **OK** to close the printer software window.

The printer software screens appear in the language you selected the next time you access them.

**Parent topic:** Selecting Default Print Settings - Windows

## Changing Automatic Update Options

Your printer software for Windows automatically checks for updates to the product software. You can change how often the software checks for updates or disable this feature.

1. Access the Windows Desktop and right-click the product icon in the Windows taskbar.
2. Select **Software Update Settings**.

   You see this window:

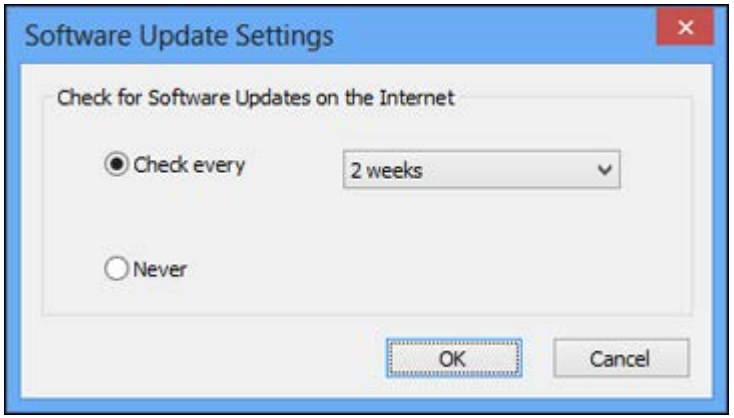


3. Do one of the following:
   - To change how often the software checks for updates, select a setting in the **Check every** menu.
   - To disable the automatic update feature, select the **Never** option.
4. Click **OK** to exit.

**Note:** If you choose to disable the automatic update feature, you can check for updates manually.

**Parent topic:** Printing with Windows

**Related tasks**

Checking for Software Updates

# Printing with OS X

You can print with your product using any OS X printing program, as described in these sections.

**Note:** If you have an Internet connection, it is a good idea to check for updates to your product software on Epson's support website.

Selecting Basic Print Settings - OS X
Selecting Page Setup Settings - OS X
Selecting Print Layout Options - OS X
Selecting Double-sided Printing Settings - OS X
Managing Color - OS X
Selecting Printing Preferences - OS X
Printing Your Document or Photo - OS X

**Parent topic:** Printing from a Computer

## Selecting Basic Print Settings - OS X

Select the basic settings for the document or photo you want to print.

1. Open a photo or document for printing.
2. Select the print command in your application.

   **Note:** You may need to select a print icon on your screen, the **Print** option in the File menu, or another command. See your application's help utility for details.

3. Select your product as the **Printer** setting.

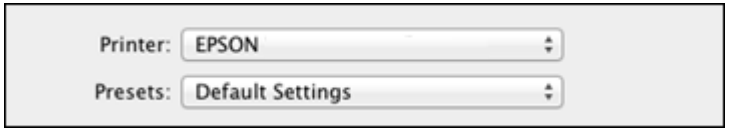


4. If necessary, click the arrow next to the Printer setting or the **Show Details** button to expand the print window.

You see the expanded printer settings window for your product:

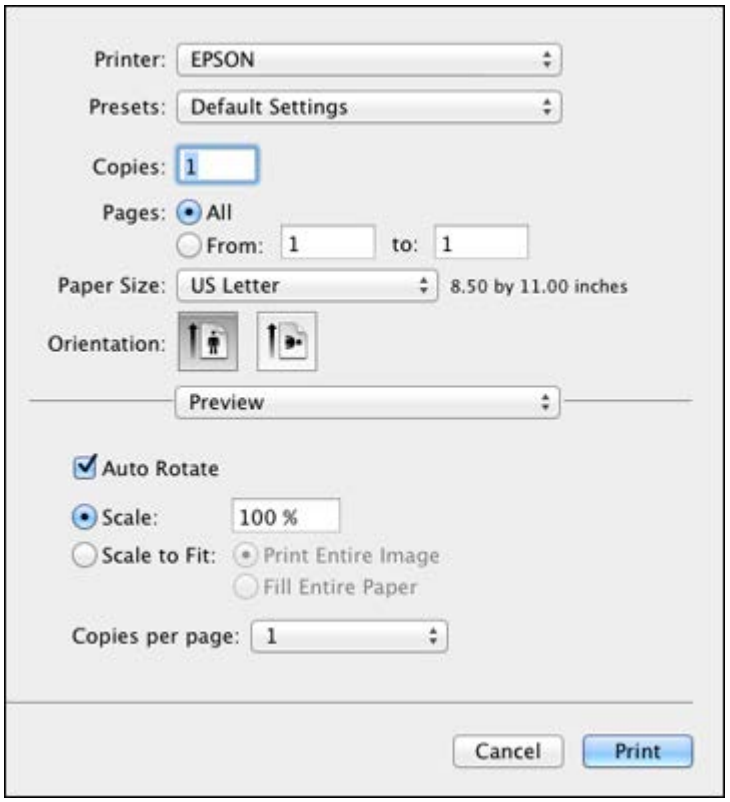


**Note:** The print window may look different, depending on the version of OS X and the application you are using.

5. Select the **Copies** and **Pages** settings as necessary.

   **Note:** If you do not see these settings in the print window, check for them in your application before printing.

6. Select the page setup options: **Paper Size** and **Orientation**.

   **Note:** If you do not see these settings in the print window, check for them in your application before printing. They may be accessible by selecting **Page Setup** from the File menu.

7. Select any application-specific settings that appear on the screen, such as those shown in the image above for the Preview application.
8. Select **Print Settings** from the pop-up menu.

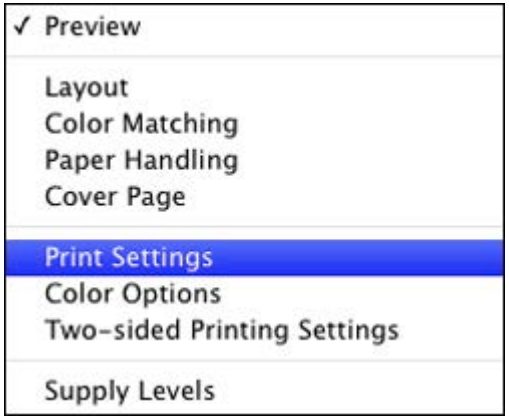

You see these settings:

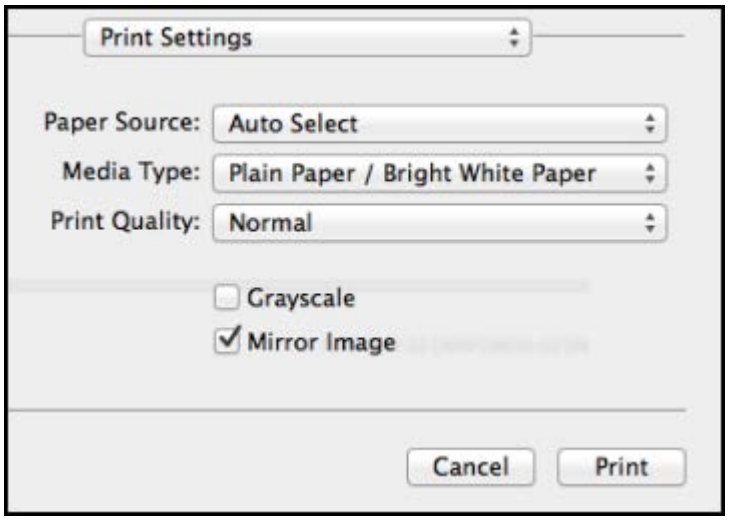


9. Select the **Paper Source** you wish to print from.
10. Select the type of paper you loaded as the **Media Type** setting.

    **Note:** The setting may not exactly match the name of your paper. Check the paper type settings list for details.

11. Select the **Print Quality** setting you want to use.
12. Select any of the available print options.

Paper Source Options - OS X
Print Quality Options - OS X
Print Options - OS X

**Parent topic:** Printing with OS X

**Related references**

Paper or Media Type Settings - Printing Software

**Related tasks**

Selecting Page Setup Settings - OS X

Printing Your Document or Photo - OS X

## Paper Source Options - OS X

You can select any of the available options in the Paper Source menu to print on the paper loaded in that source.

**Auto Select**
Automatically selects the paper source based on the selected paper size.

**Cassette 1**
Selects the paper in cassette 1 as the paper source.

**Cassette 2**
Selects the paper in cassette 2 as the paper source.

**Paper Cassette 3**
Selects the paper in cassette 3 as the paper source.

**Paper Cassette 4**
Selects the paper in cassette 4 as the paper source.

**Rear Paper Feed Slot**
Selects the paper in the rear feed slot as the paper source.

**Parent topic:** Selecting Basic Print Settings - OS X

## Print Quality Options - OS X

You can select any of the available Print Quality options to fine-tune the quality of your print. Some settings may be unavailable, depending on the paper type setting you have chosen.

**Draft**
For draft printing on plain paper.

**Normal**
For everyday text and image printing.

**Normal - Vivid**
For everyday text and image printing with good quality and print speed.

**Fine**
For text and graphics with good quality and print speed.

**Quality**
For text and graphics with increased quality and print speed.

**Best Quality**
For the best print quality, but the slowest print speed.

**Parent topic:** Selecting Basic Print Settings - OS X

### Print Options - OS X

You can select any of the print options to customize your print. Some options may be unavailable, depending on other settings you have chosen.

**Grayscale**
Prints text and graphics in black or shades of gray.

**Mirror Image**
Lets you flip the printed image horizontally.

**Parent topic:** Selecting Basic Print Settings - OS X

## Selecting Page Setup Settings - OS X

Depending on your application, you may be able to select the paper size and orientation settings from the print window.

**Note:** If you do not see these settings in the print window, check for them in your application before printing. They may be accessible by selecting **Page Setup** from the File menu.

1. Select the size of the paper you loaded as the **Paper Size** setting.
2. Select the orientation of your document or photo as shown in the print window.

   **Note:** If you are printing an envelope, select the icon.

**Note:** You can reduce or enlarge the size of the printed image by selecting **Paper Handling** from the pop-up menu and selecting a scaling option.

**Parent topic:** Printing with OS X

## Selecting Print Layout Options - OS X

You can select a variety of layout options for your document or photo by selecting **Layout** from the pop-up menu on the print window.

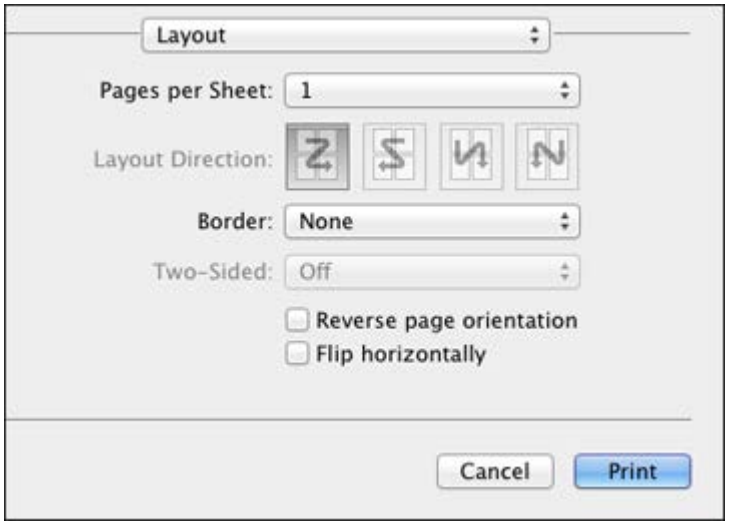


- To print multiple pages on one sheet of paper, select the number of pages in the **Pages per Sheet** pop-up menu. To arrange the print order of the pages, select a **Layout Direction** setting.
- To print borders around each page on the sheet, select a line setting from the **Border** pop-up menu.
- To invert or flip the printed image, select the **Reverse page orientation** or **Flip horizontally** settings.

**Parent topic:** Printing with OS X

## Selecting Double-sided Printing Settings - OS X

You can print on both sides of the paper by selecting **Two-sided Printing Settings** from the pop-up menu on the print window.

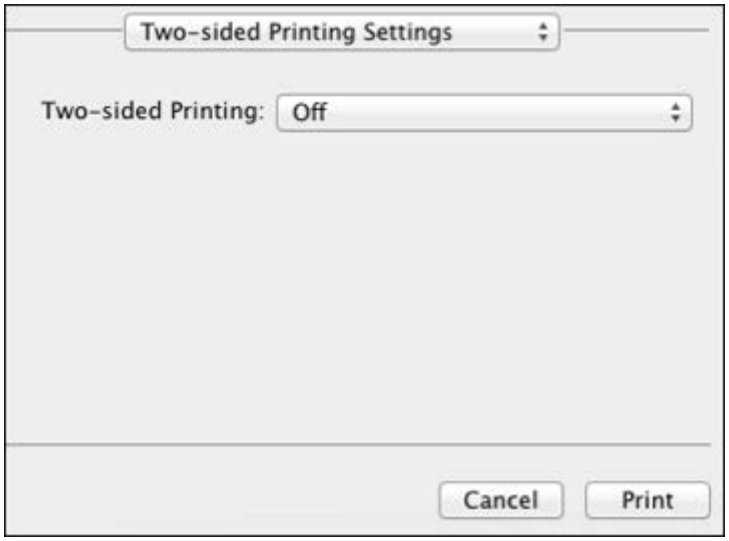


**Note:** Some options may be pre-selected or unavailable, depending on other settings you have chosen or if you are accessing the product over a network. This screen may be different, depending on the version of OS X you are using.

1. Select one of the **Two-sided Printing** options.

2. Select the type of document you are printing as the **Document Type** setting. The software automatically sets the Adjustments options for that document type.

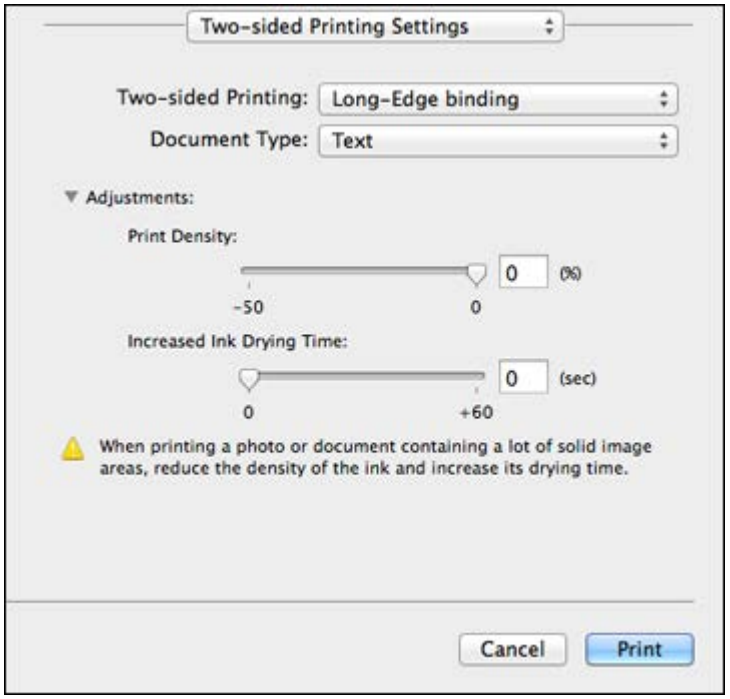


3. If necessary, customize the Adjustments settings as instructed on the screen.
4. Print a test copy of your double-sided document to test the selected settings.
5. Follow any instructions displayed on the screen during printing.

Double-sided Printing Options and Adjustments - OS X

**Parent topic:** Printing with OS X

## Double-sided Printing Options and Adjustments - OS X

You can select any of the available options in the **Two-sided Printing Settings** or **Output Settings** pop-up menu to set up your double-sided print job.

**Two-sided Printing Options**

**Long-Edge binding**
Orients double-sided printed pages to be bound on the long edge of the paper.

**Short-Edge binding**
Orients double-sided printed pages to be bound on the short edge of the paper.

**Adjustments**

**Print Density**
Sets the level of ink coverage for double-sided printing.

**Increased Ink Drying Time**
Sets the amount of time required for drying ink after printing on one side of the paper before printing the other side in double-sided printing.

**Parent topic:** Selecting Double-sided Printing Settings - OS X

## Managing Color - OS X

You can adjust the Color Matching and Color Options settings to fine-tune the colors in your printout, or turn off color management in your printer software.

1. Select **Color Matching** from the pop-up menu in the print window.

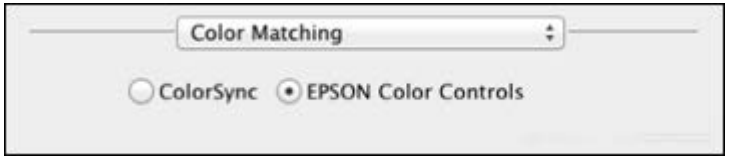


2. Select one of the available options.

3. Select **Color Options** from the pop-up menu in the print window.

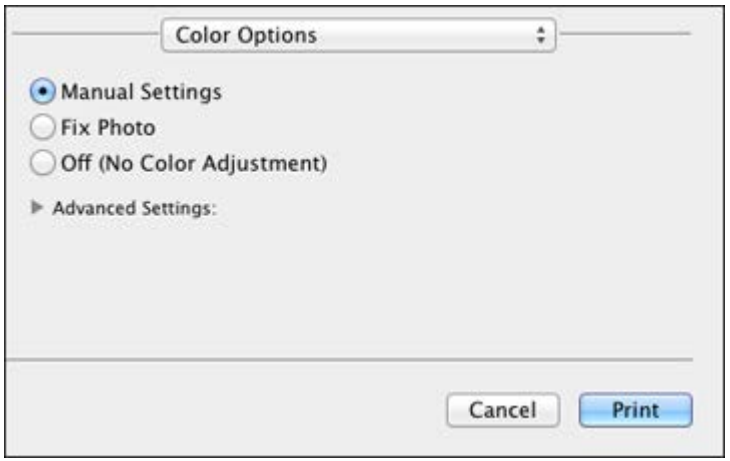


**Note:** The available settings on the Color Options menu depend on the option you selected on the Color Matching menu.

4. Select one of the available options.

Color Matching and Color Options - OS X

**Parent topic:** Printing with OS X

## Color Matching and Color Options - OS X

You can select from these settings on the **Color Matching** and **Color Options** menus.

### Color Matching Settings

**EPSON Color Controls**
Lets you manage color using controls in your printer software or turn off color management.

**ColorSync**
Prints using standard color profiles for your product and paper to help match image colors. You can customize the conversion method and filter settings on the ColorSync pop-up menu in the print window.

**Color Options Settings**

**Manual Settings**

Lets you select manual color adjustments. Click the arrow next to **Advanced Settings** and select settings for **Brightness**, **Contrast**, **Saturation**, and individual color tones. You can also select a color **Mode** setting for printing photos and graphics and the **Fix Red-Eye** setting to reduce or remove red-eye in photos. Depending on the selected color mode, you can also adjust the midtone density using the **Gamma** setting.

**Fix Photo**

Improves the color, contrast, and sharpness of flawed photos. Click the arrow next to **Advanced Settings** and select the **Fix Red-Eye** setting to reduce or remove red-eye in photos.

**Note:** Fix Photo uses a sophisticated face recognition technology to optimize photos that include faces. For this to work, both eyes and the nose must be visible in the subject's face. If your photo includes a face with an intentional color cast, such as a statue, you may want to turn off **Fix Photo** to retain the special color effects.

**Off (No Color Adjustment)**

Turns off color management in your printer software so you can manage color using only your application software.

**Parent topic:** Managing Color - OS X

## Selecting Printing Preferences - OS X

You can select printing preferences that apply to all the print jobs you send to your product.

1. In the Apple menu or the Dock, select **System Preferences**.
2. Select **Print & Fax**, **Print & Scan**, or **Printers & Scanners**, select your product, and select **Options & Supplies**.
3. Select **Driver** or **Options**.

You see a screen like this:

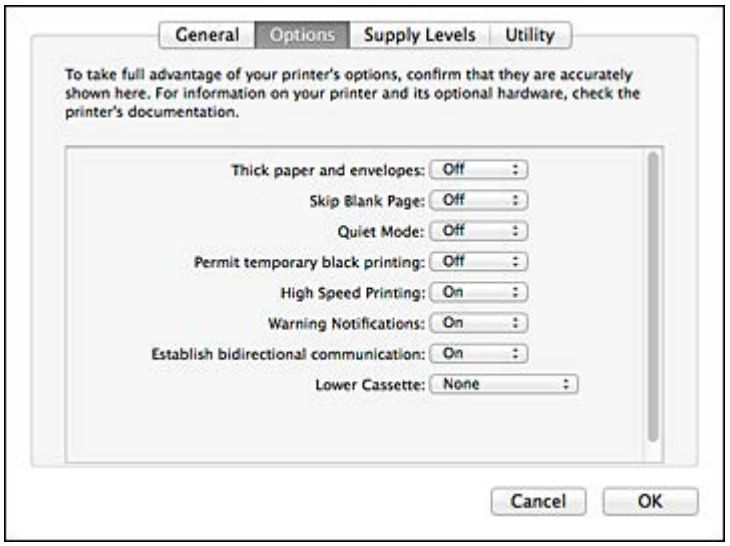


4. Select any of the available printing preferences.
5. Click **OK**.

Printing Preferences - OS X

**Parent topic:** Printing with OS X

## Printing Preferences - OS X

You can select from these settings on the **Options** or **Driver** tab.

**Thick Paper and Envelopes**
Prevents ink from smearing when you print on envelopes or other thick paper.

**Skip Blank Page**
Ensures that your product does not print pages that contain no text or images.

**Quiet Mode**
Lessens noise during printing but may decrease print speed.

**Permit temporary black printing**
Allows you to print using black ink when color ink is expended.

**High Speed Printing**
Speeds up printing but may reduce print quality.

**Warning Notifications**
Lets you choose whether or not to receive warning notifications from the printer software for various operating conditions.

**Establish bidirectional communication**
Allows the product to communicate with the computer. Do not change the default setting unless you experience issues when using a shared printing pool.

**Parent topic:** Selecting Printing Preferences - OS X

## Printing Your Document or Photo - OS X

Once you have selected your print settings, you are ready to print.

Click **Print** at the bottom of the print window.

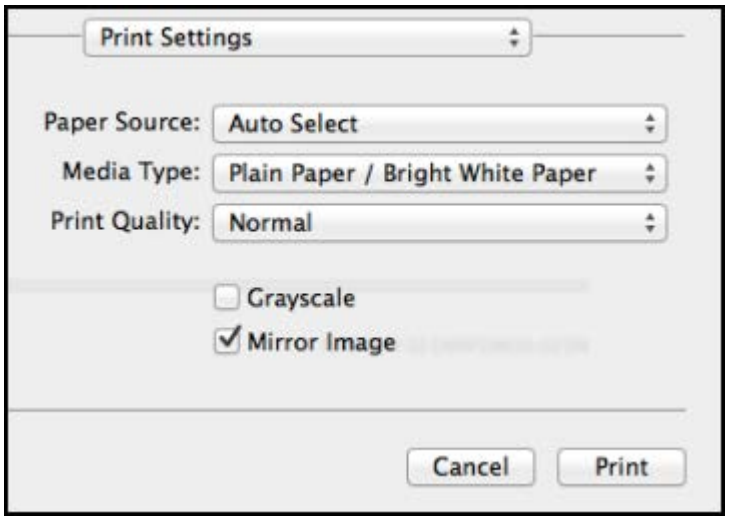


Checking Print Status - OS X

**Parent topic:** Printing with OS X

### Checking Print Status - OS X

During printing, you can view the progress of your print job, control printing, and check ink status.

1. Click the printer icon when it appears in the Dock.

   You see the print status window:

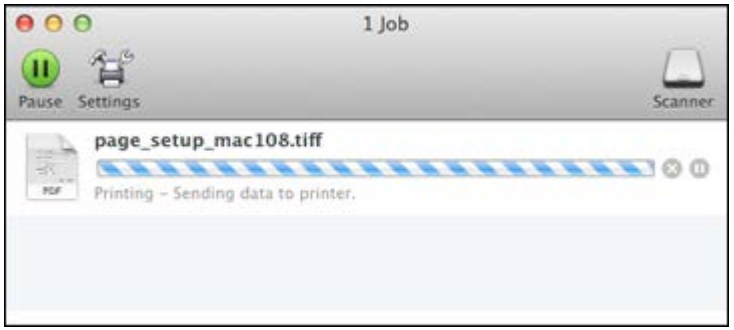


2. Select the following options as necessary:

   **OS X 10.5/10.6/10.7:**

   - To cancel printing, click the print job and click the **Delete** icon.
   - To pause a print job, click the print job and click the **Hold** icon. To resume a print job, click the print job marked "Hold" and click the **Resume** icon.
   - To pause printing for all queued print jobs, click the **Pause Printer** icon.
   - To check ink status, click the **Supply Levels** icon.

   **OS X 10.8/10.9**:

   - To cancel printing, click the button next to the print job.
   - To pause a print job, click the button next to the print job. To resume a print job, click the button.
   - To pause printing for all queued print jobs, click the large **Pause** button.
   - To check ink status, click the **Settings** icon, then click the **Supply Levels** tab.

**Parent topic:** Printing Your Document or Photo - OS X

# Printing with the Epson Universal Print Driver - Windows

You can print with the Epson Universal Print Driver using any Windows printing program, as described in these sections.

Installing the Epson Universal Print Driver - Windows
Synchronizing Printer Settings - Epson Universal Print Driver - Windows
Selecting Basic Print Settings - Epson Universal Print Driver - Windows
Selecting Additional Layout and Print Options - Epson Universal Print Driver - Windows
Selecting Maintenance Options - Epson Universal Print Driver - Windows
Selecting Default Print Settings - Epson Universal Print Driver - Windows
Locking Printer Settings - Epson Universal Print Driver - Windows
Adding Network Printers - Epson Universal Print Driver - Windows

**Parent topic:** Printing from a Computer

## Installing the Epson Universal Print Driver - Windows

The Epson Universal Print Driver supports multiple printer languages, such as PCL and ESC/P-R, and can be installed on a Windows computer.

**Note:** Make sure your product is turned on and connected to the same network as your computer before installing the printer software.

1. Download the **EPSON Universal Print Driver** from epson.com/support/wf8590.
2. Double-click the downloaded package.

3. Follow the on-screen instructions until you see the screen below.

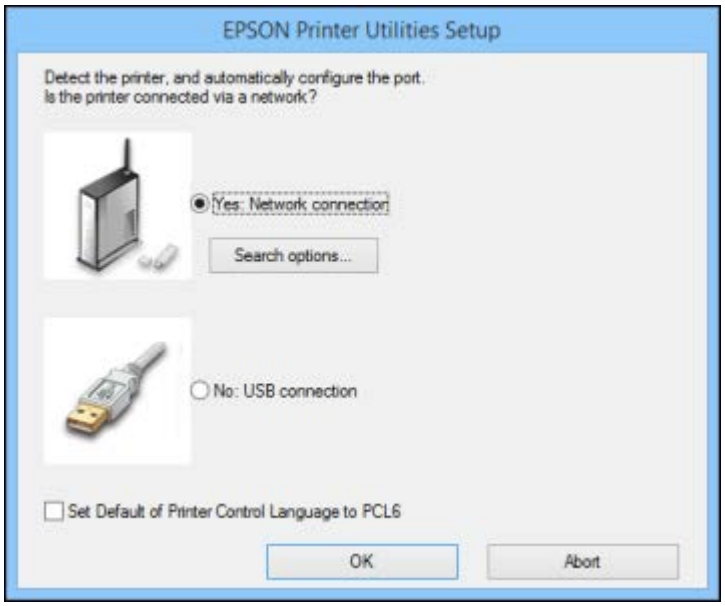


4. Select **Yes: Network connection** and click **OK**.

   **Note:** Select the **Set Default of Printer Control Language to PCL6** checkbox if you want to set the default printer language to PCL6. Leave this option deselected to set the printer language to ESC/P-R. (You can change this setting later as needed.)

After the software finishes searching for products, you see a screen like this:

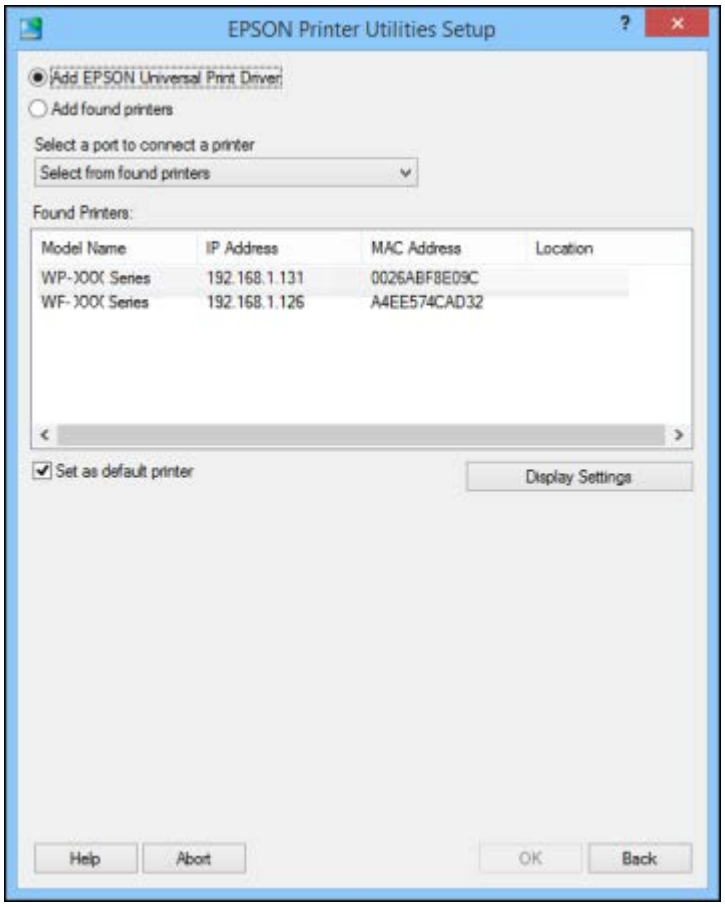


5. Do one of the following:
   - If you are installing one product, make sure **Add EPSON Universal Print Driver** is selected, and continue with the next step.
   - If you are installing more than one product, select **Add found printers**, and go to step 9.

   **Note:** You can customize and filter your product search results by clicking **Display Settings**.

6. Open the **Select a port to connect a printer** pop-up menu and select an existing printer port if necessary. Otherwise, skip this option to have a new port created automatically.
7. Select the product you want to install from the Found Printers list.

   **Note:** Deselect the **Set as default printer** checkbox if you do not want the product to be set as your default printer.

8. Click **OK**, then skip the remaining steps.
9. Select each product you want to install and click **Add to Printer Folder**.

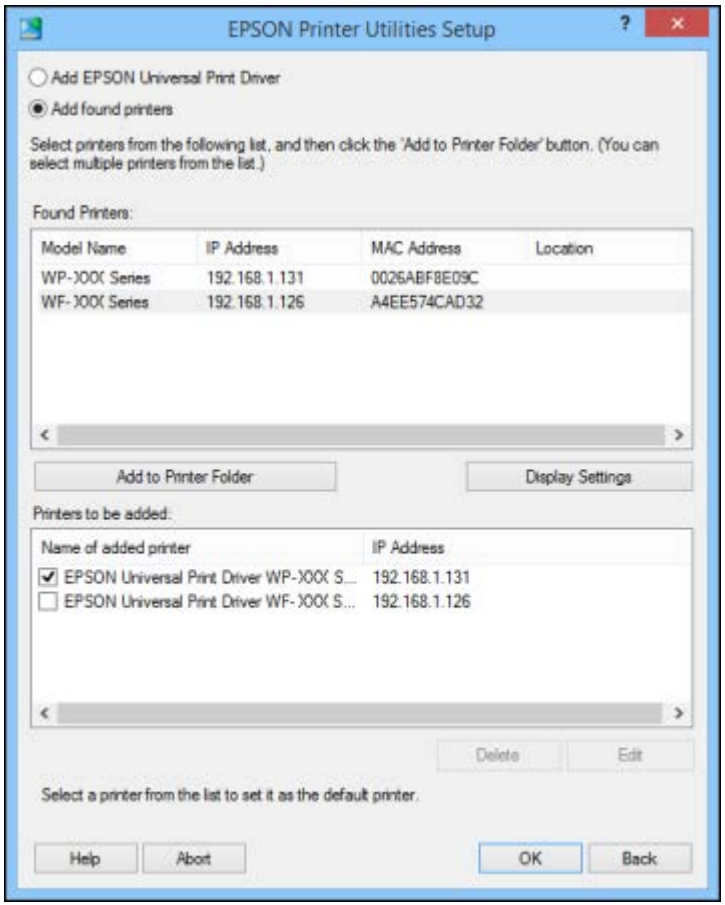

The selected products appear in the lower section of the screen.

10. Select the checkbox next to a product to make it your default printer if necessary.
11. Click **OK**.

**Parent topic:** Printing with the Epson Universal Print Driver - Windows

## Synchronizing Printer Settings - Epson Universal Print Driver - Windows

You may need to synchronize the printer driver with the product if the printer driver does not detect the correct information or settings from the product.

**Note:** You must sync the printer driver before you can use any optional equipment installed on the product, such as an optional cassette unit.

1. Do one of the following:
   - **Windows 8.x:** Navigate to the **Apps** screen and select **Control Panel** > **Hardware and Sound** > **Devices and Printers**. Right-click **EPSON Universal Print Driver** and select **Printer properties**.
   - **Windows 7:** Click and select **Devices and Printers**. Right-click **EPSON Universal Print Driver** and select **Printer properties**.
   - **Windows Vista:** Click and select **Control Panel**. Click **Printer** under **Hardware and Sound**, then right-click **EPSON Universal Print Driver** and select **Properties**.
   - **Windows XP:** Click **Start** and select **Printers and Faxes**. Right-click **EPSON Universal Print Driver** and select **Properties**.
2. Click the **Optional Settings** tab.

You see this window:

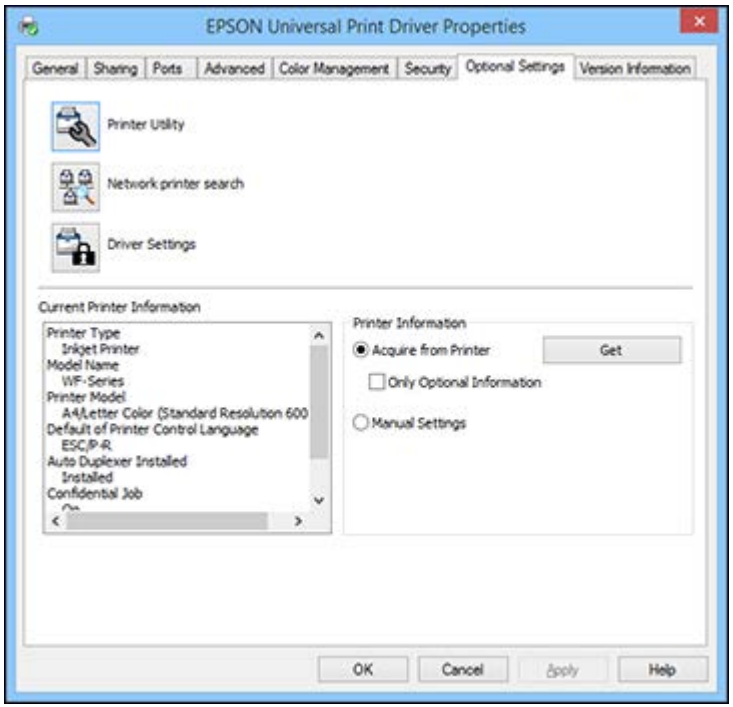


3. Make sure **Acquire from Printer** is selected and click **Get**.

   **Note:** Select the **Only Optional Information** checkbox if you only want to enable optional equipment, such as an optional cassette unit.

   The product's settings and other information appears in the Current Printer Information area.

4. Click **OK**.

**Parent topic:** Printing with the Epson Universal Print Driver - Windows

**Related tasks**

Enabling the Optional Paper Cassettes - Windows

Enabling the Optional Paper Cassettes - PostScript Printer Software - Windows

## Selecting Basic Print Settings - Epson Universal Print Driver - Windows

Select the basic settings for the document or photo you want to print.

1. Open a photo or document for printing.
2. Select the print command in your application.

   **Note:** You may need to select a print icon on your screen, the **Print** option in the **File** menu, or another command. See your application's help utility for details.

3. If necessary, select **EPSON Universal Print Driver** as the printer you want to use.

   **Note:** You may also need to select **Properties** or **Preferences** to view your print settings.

   You see the Main tab of your printer settings window:

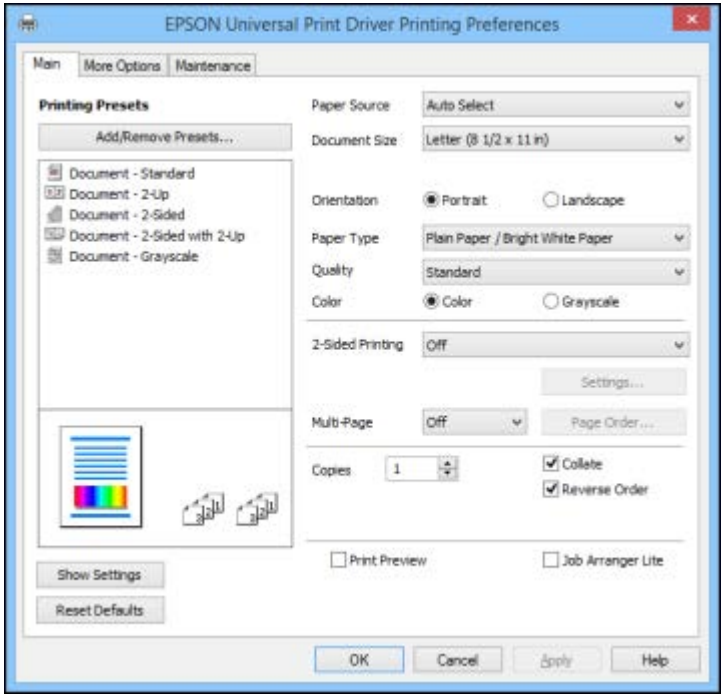


**Note:** For more information about a setting, right-click it and select **Help**.

4. For the **Paper Source** setting, select where you loaded the paper you want to print on.
5. Select the size of the paper you loaded as the **Document Size** setting.

   **Note:** You can also select the **User-Defined** setting to create a custom paper size.

6. Select the orientation of your document.

   **Note:** If you are printing an envelope, select **Landscape**.

7. Select the type of paper you loaded as the **Paper Type** setting.

   **Note:** The setting may not exactly match the name of your paper. Check the paper type settings list for details.

8. Select the **Quality** setting that matches the print quality you want to use.
9. Select a Color option:
   - To print a color document or photo, select the **Color** setting.
   - To print text and graphics in black or shades of gray, select the **Grayscale** setting.
10. To print on both sides of the paper, select one of the **2-Sided Printing** settings.
11. To print multiple pages on one sheet of paper, or print one image on multiple sheets of paper, select one of the settings in the **Multi-Page** menu and select the printing options you want.
12. To print multiple copies and arrange their print order, select the **Copies** options.
13. To preview your job before printing, select **Print Preview**.
14. To save your print job as a project that can be modified and combined with other print jobs, select **Job Arranger Lite**.

**Parent topic:** Printing with the Epson Universal Print Driver - Windows

**Related references**

Paper or Media Type Settings - Printing Software
Paper Source Options - Windows
Print Quality Options - Windows
Multi-Page Printing Options - Windows

# Selecting Additional Layout and Print Options - Epson Universal Print Driver - Windows

You can select a variety of additional layout and printing options for your document or photo on the More Options tab.

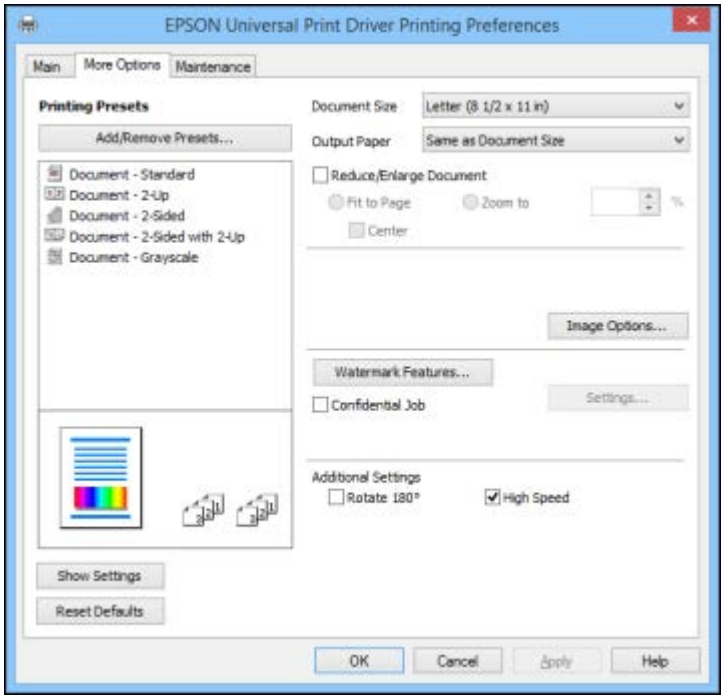


**Note:** For more information about a setting, right-click it and select **Help**.

1. To change the size of your printed document or photo, select the **Reduce/Enlarge Document** checkbox and select one of these sizing options:
   - Select the **Fit to Page** option to size your image to fit the paper you loaded. Select the size of the your document or photo as the **Document Size** setting, and the size of your paper as the **Output Paper** setting. If you want to center your image on the paper, select the **Center** option.
   - Select the **Zoom to** option to reduce or enlarge your document or photo by a specific percentage. Select the percentage in the **%** menu.

2. Select one of the following Color Correction options:
   - Select **Automatic** to automatically adjust the sharpness, brightness, contrast, and color saturation for your image.
   - Select **Custom** and click the **Advanced** button to manually adjust the color correction settings or turn off color management in your printer software.
   - Select **Image Options** to access additional settings for improving printed images.
3. To add the following features, click the **Watermark Features** button:
   - **Watermark**: adds a visible watermark to your printout.

     **Note:** Click the **Add/Delete** button to create your own watermark, and click the **Settings** button to customize the watermark.

   - **Header/Footer**: adds information such as the date and time to the top or bottom of your printout.

     **Note:** Click the **Settings** button to customize the text and location of the header or footer.

4. To add a password to your print job, select the **Confidential Job** checkbox, then enter a password. Confidential jobs are stored in the product's memory without being printed. To print the job, enter the password for the confidential job on the product's control panel.

   **Note:** Confidential print jobs are cleared from the product's memory after printing.

5. Select any of the Additional Settings options to customize your print.

**Parent topic:** Printing with the Epson Universal Print Driver - Windows

**Related references**

Custom Color Correction Options - Windows
Image Options and Additional Settings - Windows
Header/Footer Settings - Windows

## Selecting Maintenance Options - Epson Universal Print Driver - Windows

You can select maintenance and other optional settings on the Maintenance tab.

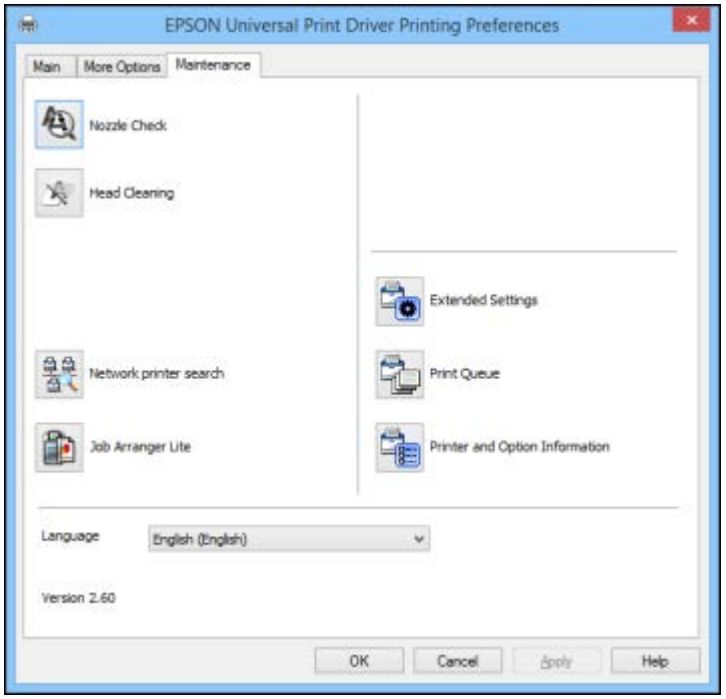


**Note:** For more information about a setting, right-click it and select **Help**.

- **Nozzle Check** lets you print a nozzle check pattern to check for clogged nozzles.
- **Head Cleaning** lets you clean the print head.
- **Network printer search** lets you search for and connect to a product on the network.
- **Job Arranger Lite** lets you save your print job as a project that can be modified and combined with other print jobs.
- **Extended Settings** lets you change a variety of print settings.
- **Print Queue** displays all the print jobs in queue. You can also cancel or restart print jobs.

- **Printer and Option Information** displays information on the printer settings and any optional equipment installed.
- **Language** lets you change the language of the printer software screens.

Extended Settings - Epson Universal Print Driver - Windows

**Parent topic:** Printing with the Epson Universal Print Driver - Windows

**Related concepts**

Print Head Nozzle Check

Print Head Cleaning

## Extended Settings - Epson Universal Print Driver - Windows

You can select from these settings on the Extended Settings window.

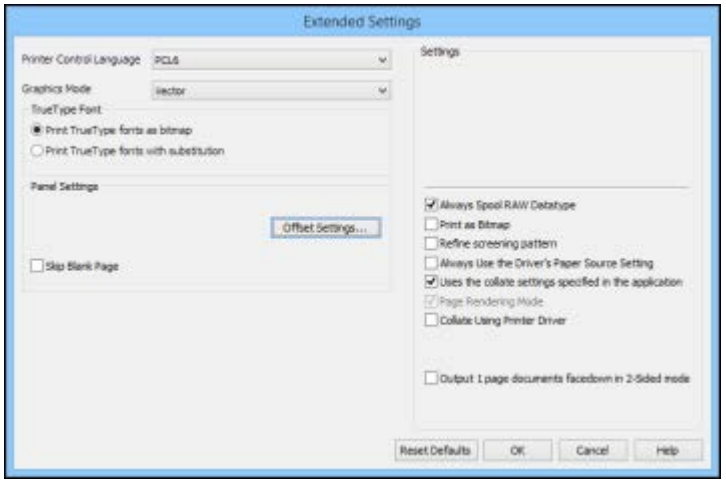


**Printer Control Language**
Lets you select the printer control language.

**Graphics Mode**
Lets you select the mode by which to output PDL commands to the product.

**TrueType Font**
Lets you select how you want to print TrueType fonts.

**Offset Settings**
Lets you make fine-tune adjustments to the print position of data on your printout.

**Skip Blank Page**
Ensures that your product does not print pages that contain no text or images.

**Always Spool RAW Datatype**
Increases print speed and may solve other printing problems.

**Print as Bitmap**
Increases print speed when printing is extremely slow or the print head stops during printing, and other settings do not help.

**Refine screening pattern**
Prints graphics with a finer screening pattern.

**Always Use the Driver's Paper Source Setting**
Prints using the paper source setting in the printer driver, rather than the setting in your application.

**Uses the collate settings specified in the application**
Prints using the collate setting in your application.

**Page Rendering Mode**
Increases print speed when printing is extremely slow or the print head stops during printing.

**Collate Using Printer Driver**
Prints and collates multi-page documents using the printer driver. Deselect this checkbox to use the product to collate your print jobs instead. (This setting is automatically enabled if there is not enough memory on the product to collate your print job.)

**Output 1 page documents facedown in 2-Sided mode**
Outputs single-sided pages in a 2-sided print job facedown instead of faceup.

**Parent topic:** Selecting Maintenance Options - Epson Universal Print Driver - Windows

## Selecting Default Print Settings - Epson Universal Print Driver - Windows

When you change your print settings in a program, the changes apply only while you are printing in that program session. If you want to change the print settings you use in all your Windows programs, you can select new default print settings.

1. Do one of the following:
   - **Windows 8.x:** Navigate to the **Apps** screen and select **Control Panel** > **Hardware and Sound** > **Devices and Printers**. Right-click **EPSON Universal Print Driver** and select **Print Preferences**.
   - **Windows 7:** Click and select **Devices and Printers**. Right-click **EPSON Universal Print Driver** and select **Printing Preferences**.

- **Windows Vista:** Click and select **Control Panel**. Click **Printer** under **Hardware and Sound**, right-click **EPSON Universal Print Driver**, and select **Printing Preferences**.
- **Windows XP:** Click **Start** and select **Printers and Faxes**. Right-click **EPSON Universal Print Driver** and select **Printing Preferences**.

You see the printer settings window:

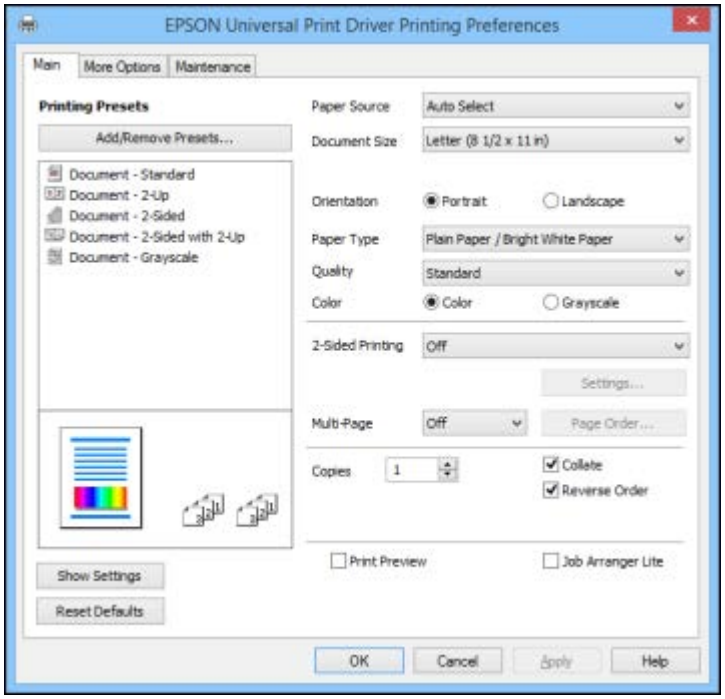


**Note:** For more information about a setting, right-click it and select **Help**.

2. Select the print settings you want to use as defaults in all your Windows programs.
3. Click **OK**.

These settings are now the defaults selected for printing. You can still change them as needed for printing in any program session.

**Parent topic:** Printing with the Epson Universal Print Driver - Windows

## Locking Printer Settings - Epson Universal Print Driver - Windows

Administrators can lock some printer settings to prevent unauthorized changes. The following settings can be locked:

- Watermark
- Header/footer
- Color printing
- 2-sided printing
- Multi-page printing
- All document settings

1. Do one of the following:
   - **Windows 8.x:** Navigate to the **Apps** screen and select **Control Panel** > **Hardware and Sound** > **Devices and Printers**. Right-click **EPSON Universal Print Driver** and select **Printer properties**.
   - **Windows 7:** Click and select **Devices and Printers**. Right-click **EPSON Universal Print Driver** and select **Printer properties**.
   - **Windows Vista:** Click and select **Control Panel**. Click **Printer** under **Hardware and Sound**, then right-click **EPSON Universal Print Driver** and select **Properties**.
   - **Windows XP:** Click **Start** and select **Printers and Faxes**. Right-click **EPSON Universal Print Driver** and select **Properties**.
2. Click the **Optional Settings** tab.

You see this window:

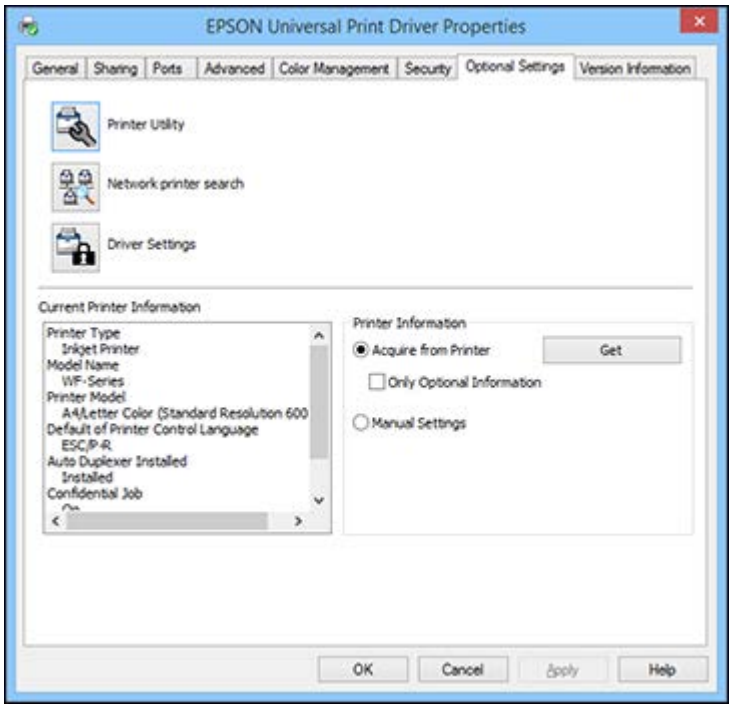


**Note:** You can prevent access to the **Optional Settings** tab by changing the user or group permissions in the **Security** tab.

3. Click **Driver Settings**.

You see this window:

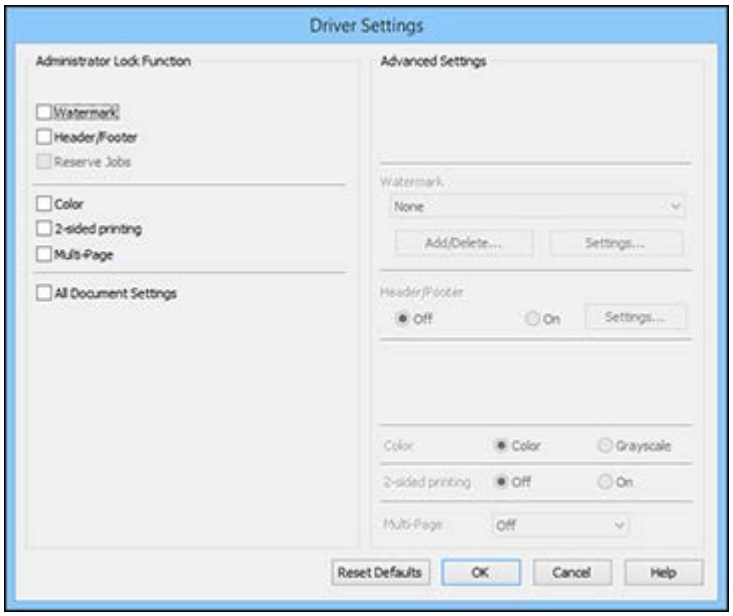


4. Select the checkbox for the function or functions you want to lock. To lock all print settings, select **All Document Settings**.
5. Under **Advanced Settings**, select the setting you want for each selected function.
6. Click **OK**.

Epson Universal Print Driver Lock Settings

**Parent topic:** Printing with the Epson Universal Print Driver - Windows

## Epson Universal Print Driver Lock Settings

Select the settings you want to use for locking print functions.

| Printing function | Available settings | Description |
|---|---|---|
| **Watermark** | Various text watermarks | Lets you select the text for the watermark (or prohibit watermarks) |
| | **Add/Delete** | Lets you add (or delete) a customized text or image-based watermark |
| | **Settings** | |
| | | Lets you select the size, position, color and other watermark settings |
| **Header/Footer** | **Off** | Prohibits headers or footers |
| | **On** | Allows headers and footers |
| | **Settings** | Lets you select the text and position for printing headers and/or footers |
| **Color** | **Color** | Allows color printing |
| | **Grayscale** | Prints in black or shades of gray only |
| **2-sided printing** | **Off** | Allows printing on only one side of the paper |
| | **On** | Allows printing on both sides of the paper |
| **Multi-Page** | **Off** | Prohibits multi-page settings |
| | **2-Up** | Prints 2 pages on one sheet of paper |
| | **4-Up** | Prints 4 pages on one sheet of paper |

**Parent topic:** Locking Printer Settings - Epson Universal Print Driver - Windows

## Adding Network Printers - Epson Universal Print Driver - Windows

You can use the Epson Universal Print Driver to find and add network printers.

1. Do one of the following:
   - **Windows 8.x:** Navigate to the **Apps** screen and select **Control Panel** > **Hardware and Sound** > **Devices and Printers**. Right-click **EPSON Universal Print Driver** and select **Printer properties**.
   - **Windows 7:** Click and select **Devices and Printers**. Right-click **EPSON Universal Print Driver** and select **Printer properties**.
   - **Windows Vista:** Click and select **Control Panel**. Click **Printer** under **Hardware and Sound**, then right-click **EPSON Universal Print Driver** and select **Properties**.

- **Windows XP:** Click **Start** and select **Printers and Faxes**. Right-click **EPSON Universal Print Driver** and select **Properties**.

2. Click the **Optional Settings** tab.

   You see this window:

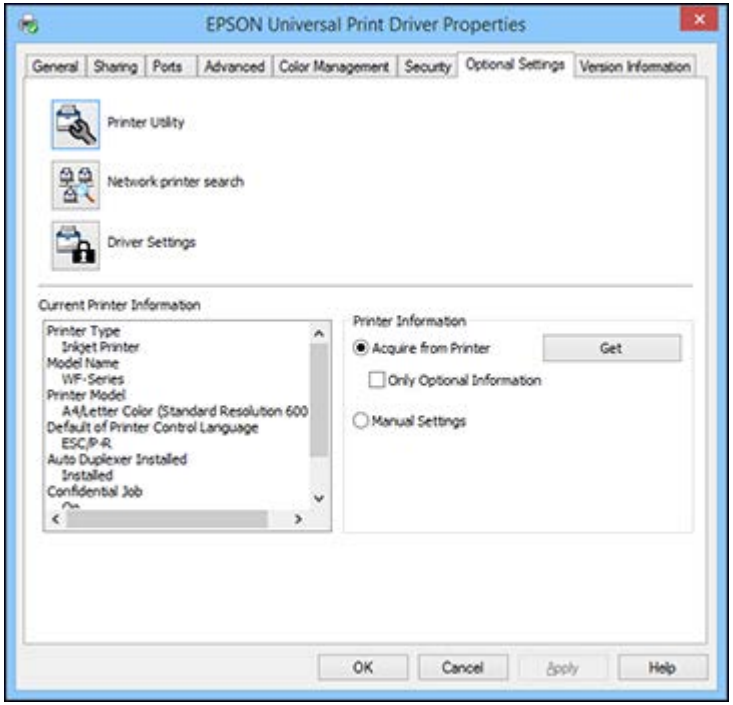


3. Click **Network printer search**.
4. When you see the search results, select **Add found printers**.

You see a screen like this:

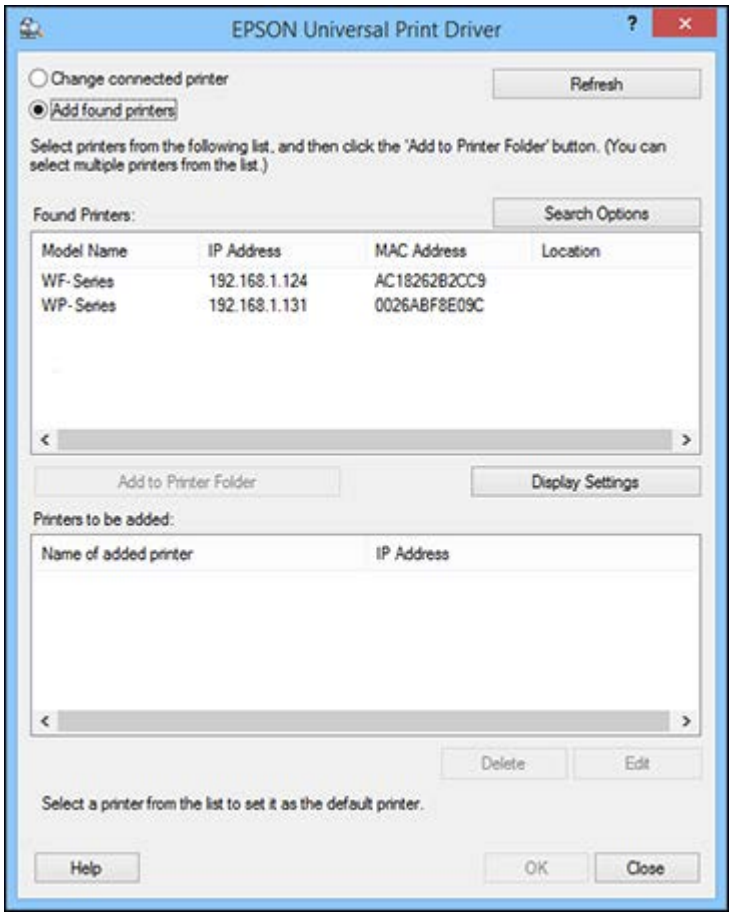


5. Select the printer or printers you want to add.
6. Click **Add to Printer Folder**.

   The selected printer or printers appear in the lower section of the screen.
7. Click **OK**.

**Parent topic:** Printing with the Epson Universal Print Driver - Windows

# Printing with the PostScript (PS3) Printer Software - Windows

You can print with the PostScript (PS3) printer software using any Windows printing program, as described in these sections.

Installing the PostScript (PS3) Printer Software - Windows
Enabling the Optional Paper Cassettes - PostScript Printer Software - Windows
Selecting Basic Print Settings - PostScript Printer Software - Windows
Selecting Additional Layout and Print Options - PostScript Printer Software - Windows
Selecting Default Print Settings - PostScript Printer Software - Windows

**Parent topic:** Printing from a Computer

## Installing the PostScript (PS3) Printer Software - Windows

If you did not install the standard Epson printer software, you need to install the PostScript (PS3) printer software before you can adjust the print settings and print to your network printer.

**Note:** Make sure your product is turned on and connected to the same network as your computer before installing the printer software.

1. Download the **Drivers and Utilities Combo Package - PS3 PostScript** from epson.com/support/wf8590.
2. Double-click the downloaded package.
3. Click **OK**.
4. Click **Accept**.
5. Click **Install**.
6. Click **Next** and follow the on-screen instructions.

**Parent topic:** Printing with the PostScript (PS3) Printer Software - Windows

## Enabling the Optional Paper Cassettes - PostScript Printer Software - Windows

If you installed optional paper cassette units, you need to enable the optional cassette units before you can use them with the PS3 printer software.

1. Do one of the following:
   - **Windows 8.x:** Navigate to the **Apps** screen and select **Control Panel** > **Hardware and Sound** > **Devices and Printers**. Right-click your product name and select **Printer properties**.

- **Windows 7:** Click and select **Devices and Printers**. Right-click your product name and select **Printer Properties**.
- **Windows Vista:** Click and select **Control Panel**. Click **Printer** under **Hardware and Sound**, then right-click your product name, and select **Properties**.
- **Windows XP:** Click **Start** and select **Printers and Faxes**. Right-click your product name and select **Properties**.

2. Click the **Device Settings** tab.

   You see a window like this:

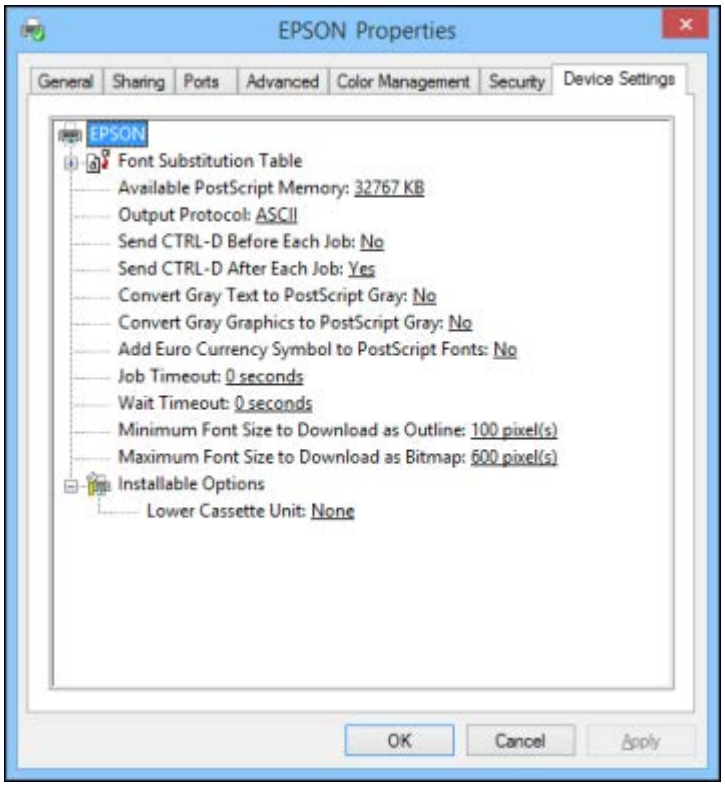


3. Select the number of optional cassettes installed as the Lower Cassette Unit setting.
4. Click **OK**.

The optional paper cassettes are now enabled.

**Parent topic:** Printing with the PostScript (PS3) Printer Software - Windows

**Related tasks**

Enabling the Optional Paper Cassettes - Windows
Synchronizing Printer Settings - Epson Universal Print Driver - Windows

## Selecting Basic Print Settings - PostScript Printer Software - Windows

Select the basic settings for the document or photo you want to print.

1. Open a photo or document for printing.
2. Select the print command in your application.

   **Note:** You may need to select a print icon on your screen, the **Print** option in the **File** menu, or another command. See your application's help utility for details.

3. If necessary, select your product name as the printer you want to use, and then click the **Preferences** button.

You see the Layout tab of your printer settings window:

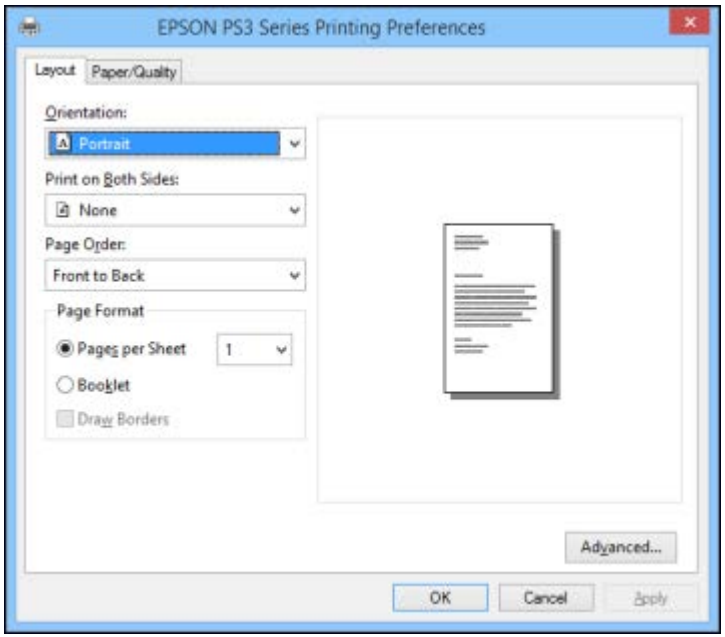


4. Select the orientation of your document.
5. To print on both sides of the paper, select one of the **Print on Both Sides** settings.
6. To change the printing order of the pages, select one of the **Page Order** settings.
7. To print multiple pages on one sheet of paper, adjust the **Pages per Sheet** setting.
8. To create a folded booklet out of your photo or document, select the **Booklet** option.
9. Click the **Paper/Quality** tab.

You see this window:

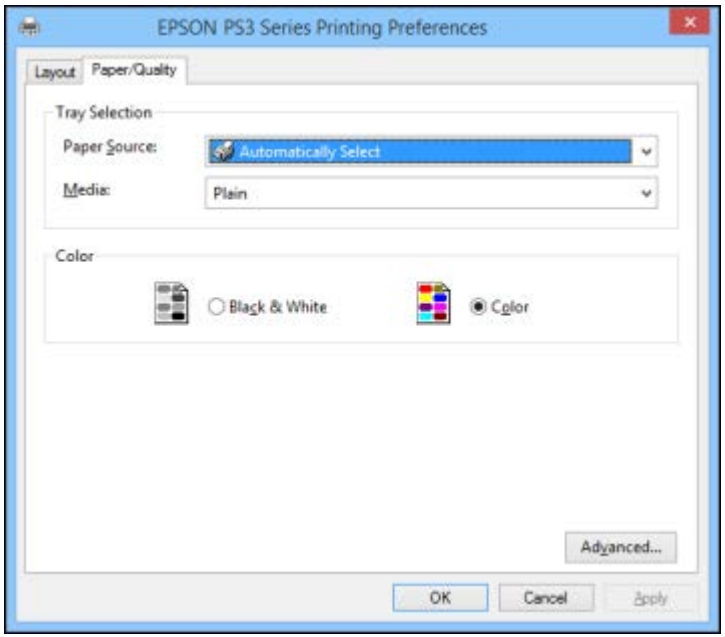


10. Select the **Paper Source** that matches where you loaded the paper you want to print on.
11. Select **Plain** as the **Media** setting.
12. Select one of the following as the Color setting:
    - To print a color document or photo, select the **Color** setting.
    - To print text and graphics in black only, select the **Black & White** setting.

**Parent topic:** Printing with the PostScript (PS3) Printer Software - Windows

**Related references**

Paper Source Options - Windows

# Selecting Additional Layout and Print Options - PostScript Printer Software - Windows

You can select a variety of additional layout and printing options for your document or photo by clicking the **Advanced** button.

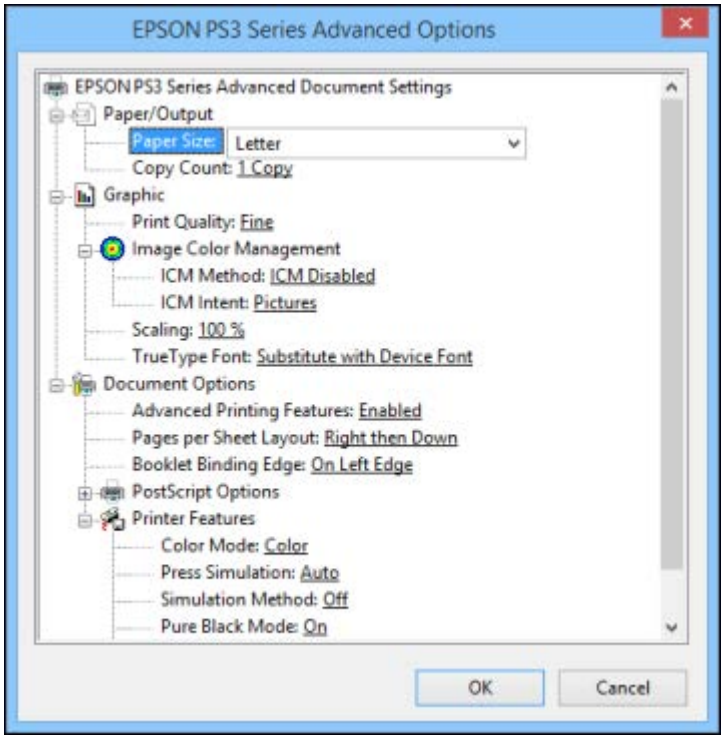


1. Select the size of the paper you loaded as the **Paper Size** setting.
2. Select the **Print Quality** option that matches the print quality you want to use.
3. Adjust the **Scaling** setting to reduce or enlarge your document or photo by a specific percentage.
4. To utilize the Windows Image Color Management system, set the **ICM Method** option to one of the **ICM Handling** options and select the **ICM Intent** setting you want to use.
5. Adjust the **Pages Per Sheet Layout** setting to change the order of multiple pages on a single sheet of paper when you have adjusted the **Pages Per Sheet** setting on the **Layout** tab.
6. Adjust the **Booklet Binding Edge** setting to change the orientation of your printed booklet.

7. Expand the PostScript Options heading to access the advanced PostScript printer software features.
8. Select any of the remaining **Printer Features** options to customize your printouts.

**Parent topic:** Printing with the PostScript (PS3) Printer Software - Windows

## Selecting Default Print Settings - PostScript Printer Software - Windows

When you change your print settings in a program, the changes apply only while you are printing in that program session. If you want to change the print settings you use in all your Windows programs, you can select new default print settings.

1. Do one of the following:
   - **Windows 8.x:** Navigate to the **Apps** screen and select **Control Panel** > **Hardware and Sound** > **Devices and Printers**. Right-click your product name and select **Print Preferences**.
   - **Windows 7:** Click and select **Devices and Printers**. Right-click your product name and select **Printing Preferences**.
   - **Windows Vista:** Click and select **Control Panel**. Click **Printer** under **Hardware and Sound**, right-click your product name, and select **Printing Preferences**.
   - **Windows XP:** Click **Start** and select **Printers and Faxes**. Right-click your product name and select **Printing Preferences**.

You see the printer settings window:

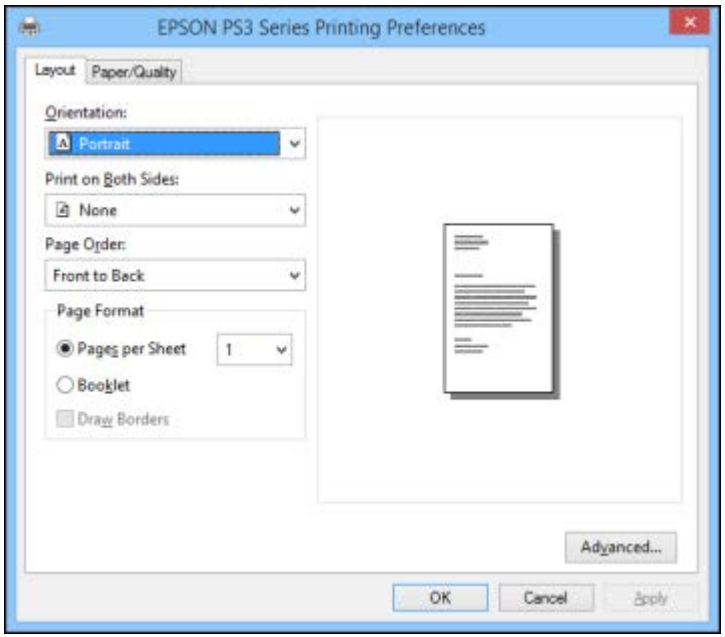


2. Select the print settings you want to use as defaults in all your Windows programs.
3. Click **OK**.

These settings are now the defaults selected for printing. You can still change them as needed for printing in any program session.

**Parent topic:** Printing with the PostScript (PS3) Printer Software - Windows

# Printing with the PostScript (PS3) Printer Software - OS X

You can print with the PostScript (PS3) printer software using any OS X printing program, as described in these sections.

Installing the PostScript (PS3) Printer Software - OS X
Enabling the Optional Paper Cassettes - PostScript Printer Software - OS X
Selecting Basic Print Settings - PostScript Printer Software - OS X
Selecting Page Setup Settings - PostScript Printer Software - OS X

Selecting Print Layout Options - PostScript Printer Software - OS X
Sizing Printed Images - PostScript Printer Software - OS X
Managing Color - PostScript Printer Software - OS X
Printing Your Document or Photo - PostScript Printer Software - OS X

**Parent topic:** Printing from a Computer

## Installing the PostScript (PS3) Printer Software - OS X

If you did not install the standard Epson printer software, you need to install the PostScript (PS3) printer software before you can adjust the print settings and print to your network printer.

**Note:** Make sure your product is turned on and connected to the same network as your computer before installing the printer software.

1. Download the **Drivers and Utilities Combo Package - PS3 PostScript** from epson.com/support/wf8590.
2. Double-click the downloaded package.
3. Double-click **EPSON**.
4. Click **Continue** on the next two screens.
5. Click **Agree**.
6. Click **Install**.
7. If necessary, enter the administrator password.
8. Click **Start** and follow the on-screen instructions.

**Parent topic:** Printing with the PostScript (PS3) Printer Software - OS X

## Enabling the Optional Paper Cassettes - PostScript Printer Software - OS X

If you installed optional paper cassette units, you need to enable the optional cassette units before you can use them with the PS3 printer software.

1. In the Apple menu or the Dock, select **System Preferences**.
2. Select **Print & Fax**, **Print & Scan**, or **Printers & Scanners**, select your product, and select **Options & Supplies**.
3. Select **Driver** or **Options**.

You see a screen like this:

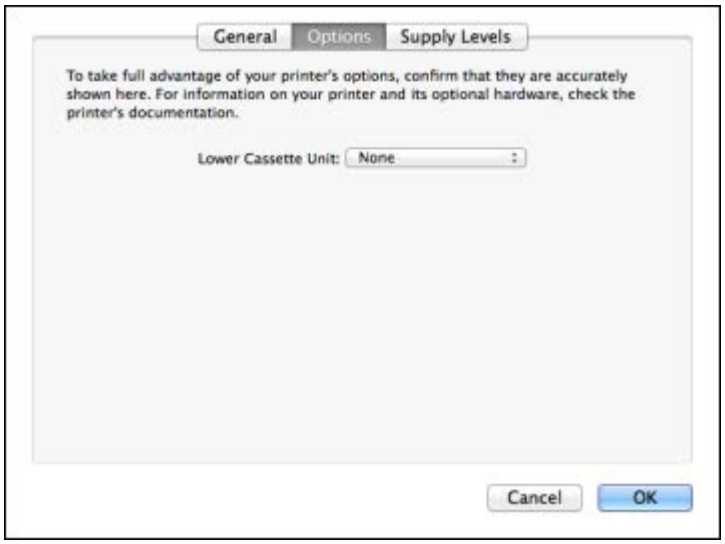


4. Select the number of optional cassettes installed as the Lower Cassette Unit setting.
5. Click **OK**.

The optional paper cassettes are now enabled.

**Parent topic:** Printing with the PostScript (PS3) Printer Software - OS X

**Related tasks**

Enabling the Optional Paper Cassettes - OS X

## Selecting Basic Print Settings - PostScript Printer Software - OS X

Select the basic settings for the document or photo you want to print.

1. Open a photo or document for printing.
2. Select the print command in your application.

**Note:** You may need to select a print icon on your screen, the **Print** option in the **File** menu, or another command. See your application's help utility for details.

3. Select your product as the **Printer** setting.

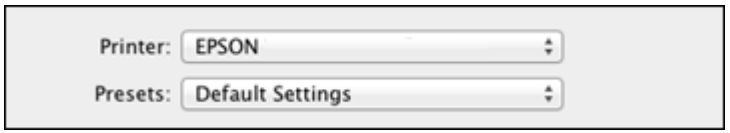


4. If necessary, click the arrow next to the Printer setting or the **Show Details** button to expand the print window.

   You see the expanded printer settings window for your product:

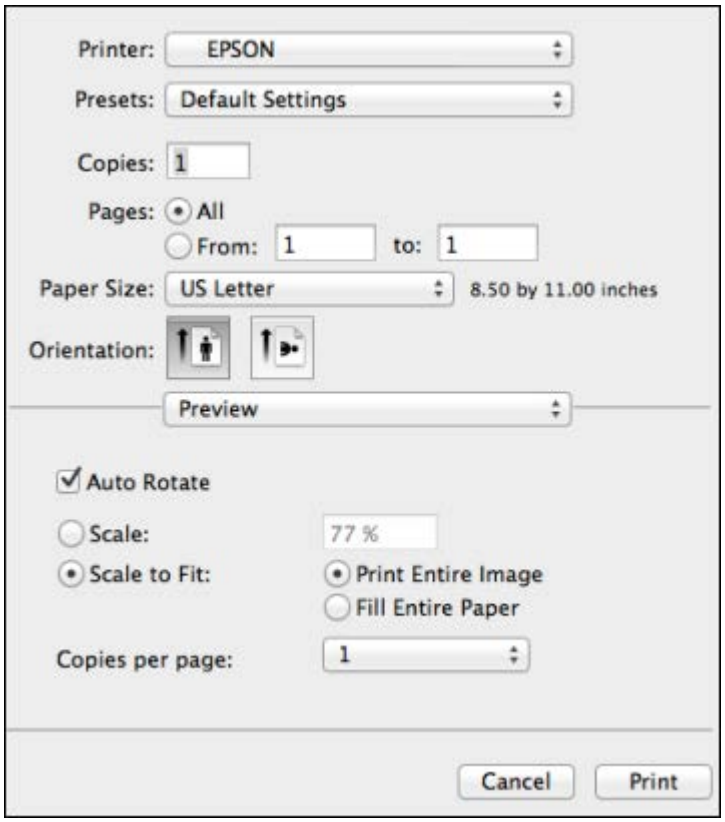

**Note:** The print window may look different, depending on the version of OS X and the application you are using.

5. Select the **Two-Sided**, **Copies**, and **Pages** settings as necessary.

   **Note:** If you do not see these settings in the print window, check for them in your application before printing.

6. Select the page setup options: **Paper Size** and **Orientation**.

   **Note:** If you do not see these settings in the print window, check for them in your application before printing. They may be accessible by selecting **Page Setup** from the File menu.

7. Select any application-specific settings that appear on the screen, such as those shown in the image above for the Preview application.
8. Select **Paper Feed** from the pop-up menu.

You see these settings:

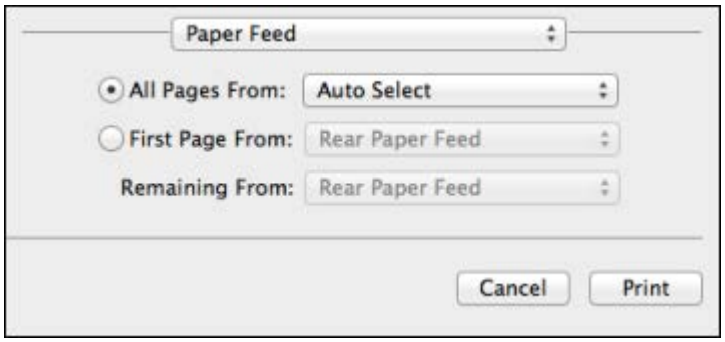


9. Select **All Pages From** or **First Page From** and select the paper source you want to print from.
10. Select **Printer Features** from the pop-up menu.

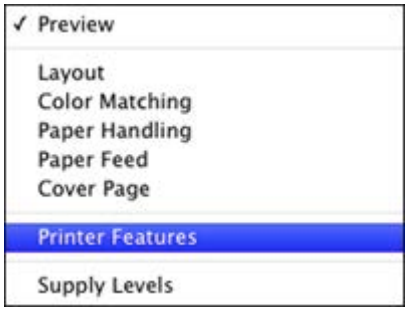

You see these settings:

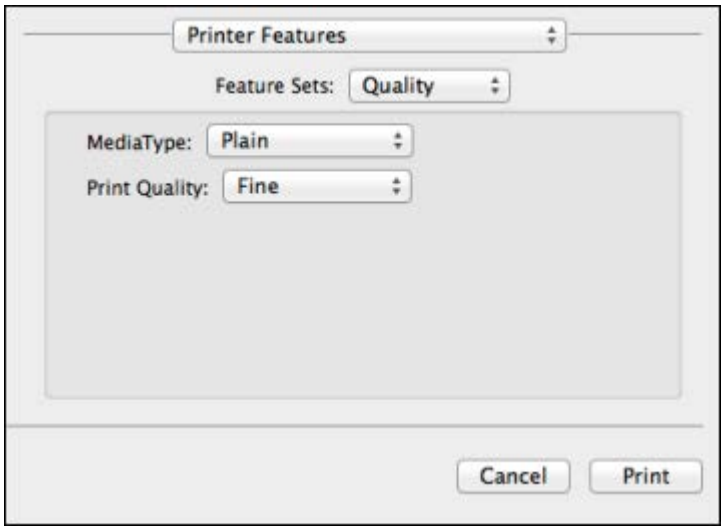


11. Select **Plain** as the **MediaType** setting.

    **Note:** The PostScript printer software supports plain paper printing on these paper and envelope sizes:

    - A4 (8.3 × 11.7 inches [210 × 297 mm])
    - Letter (8.5 × 11 inches [216 × 279 mm])
    - No. 10 (4.1 × 9.5 inches [105 × 241 mm])

12. Select one of the following **Print Quality** options:
    - For fast printing with reduced quality, select **Fast**.
    - For printing text and graphics with good quality and print speed, select **Fine**.
    - For the best printing with reduced speed, select **Maximum**.
13. Select **Color** from the Feature Sets pop-up menu.

You see these settings:

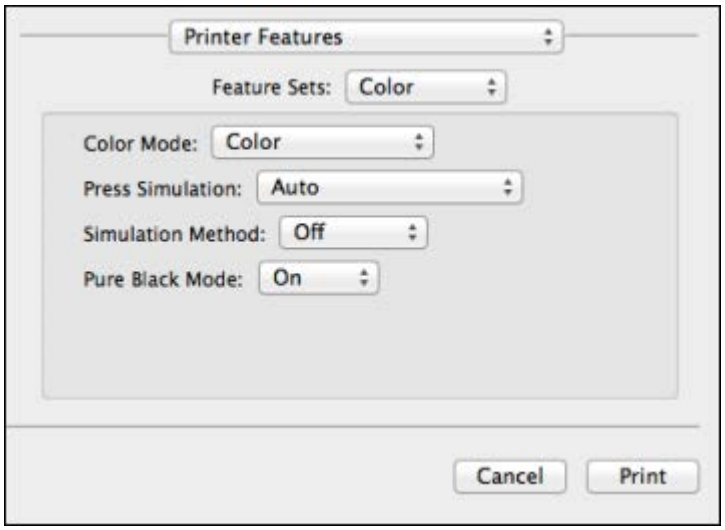


14. Select a **Color Mode** option:
    - To print a color document or photo, select the **Color** setting.
    - To print text and graphics in black only, select the **Monochrome** setting.
15. Select any of the available print options.

**Parent topic:** Printing with the PostScript (PS3) Printer Software - OS X

**Related tasks**

Selecting Page Setup Settings - PostScript Printer Software - OS X
Selecting Print Layout Options - PostScript Printer Software - OS X
Printing Your Document or Photo - PostScript Printer Software - OS X

# Selecting Page Setup Settings - PostScript Printer Software - OS X

Depending on your application, you may be able to select the paper size and orientation settings from the print window.

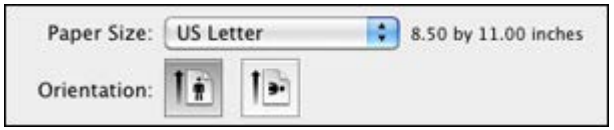


**Note:** If you do not see these settings in the print window, check for them in your application before printing. They may be accessible by selecting **Page Setup** from the File menu.

1. Select the size of the paper you loaded as the **Paper Size** setting. You can also select a custom setting to create a custom paper size.
2. Select the orientation of your document or photo as shown in the print window.

**Note:** You can reduce or enlarge the size of the printed image by selecting **Paper Handling** from the pop-up menu and selecting a scaling option.

**Parent topic:** Printing with the PostScript (PS3) Printer Software - OS X

**Related tasks**

Selecting Basic Print Settings - PostScript Printer Software - OS X

## Selecting Print Layout Options - PostScript Printer Software - OS X

You can select a variety of layout options for your document or photo by selecting **Layout** from the pop-up menu on the print window.

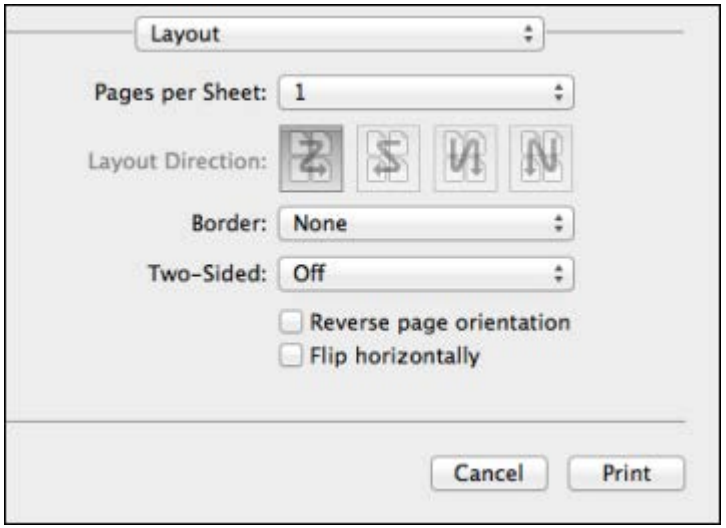


- To print multiple pages on one sheet of paper, select the number of pages in the **Pages per Sheet** pop-up menu. To arrange the print order of the pages, select a **Layout Direction** setting.
- To print borders around each page on the sheet, select a line setting from the **Border** pop-up menu.
- To print on both sides of the page, select one of the **Two-Sided** settings.
- To invert or flip the printed image, select the **Reverse page orientation** or **Flip horizontally** settings.

**Parent topic:** Printing with the PostScript (PS3) Printer Software - OS X

## Sizing Printed Images - PostScript Printer Software - OS X

You can adjust the size of the image as you print it by selecting **Paper Handling** from the pop-up menu on the Print window.

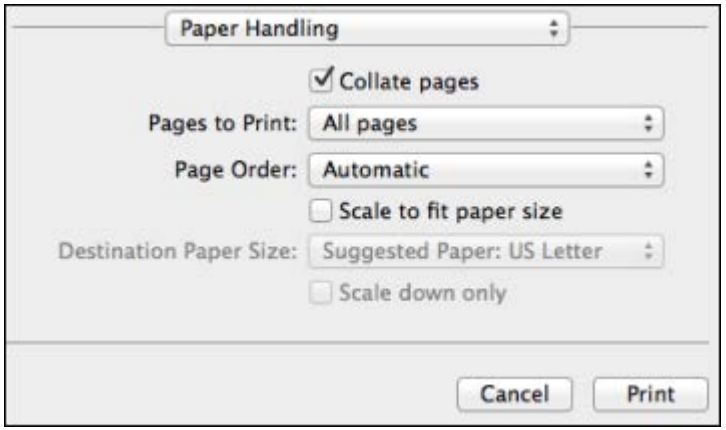


- To print only selected pages in a multi-page document, select an option from the **Pages to Print** pop-up menu.
- To adjust the order in which pages are printed, select an option from the **Page Order** pop-up menu.
- To scale the image to fit on a specific paper size, select the **Scale to fit paper size** checkbox and select a paper size from the **Destination Paper Size** pop-up menu.

**Parent topic:** Printing with the PostScript (PS3) Printer Software - OS X

## Managing Color - PostScript Printer Software - OS X

You can adjust the Color Matching settings to fine-tune the colors in your printout.

1. Select **Color Matching** from the pop-up menu in the print window.

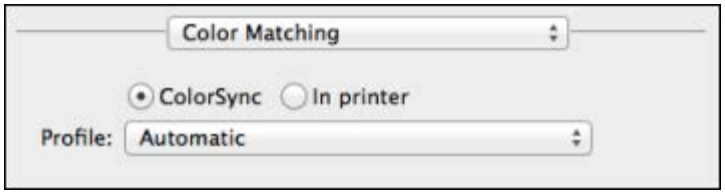

2. Do one of the following:
   - To print using standard color profiles for your product and paper to help match image colors, select **ColorSync**. Select one of the available **Profile** options to change the active color profile.
   - To use the product's default color matching, select **In printer**.

**Parent topic:** Printing with the PostScript (PS3) Printer Software - OS X

## Printing Your Document or Photo - PostScript Printer Software - OS X

Once you have selected your print settings, you are ready to print.

Click **Print** at the bottom of the print window.

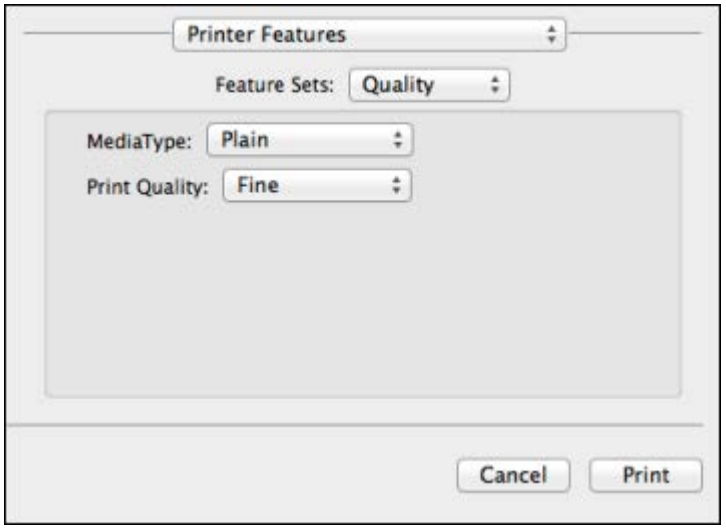


Checking Print Status - PostScript Printer Software - OS X

**Parent topic:** Printing with the PostScript (PS3) Printer Software - OS X

### Checking Print Status - PostScript Printer Software - OS X

During printing, you can view the progress of your print job, control printing, and check ink status.

1. Click the printer icon when it appears in the Dock.

You see the print status window:

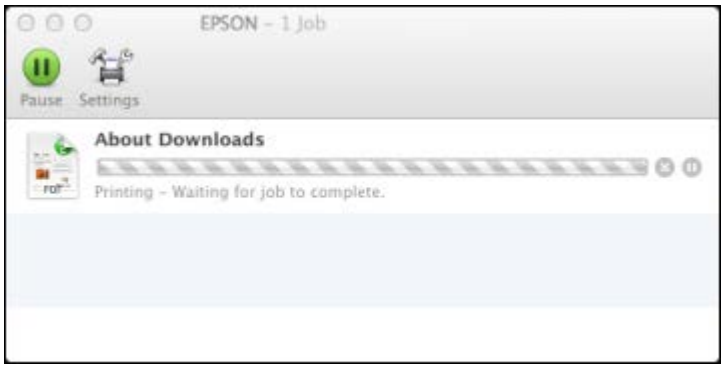


2. Select the following options as necessary:

   **OS X 10.5/10.6/10.7:**

   - To cancel printing, click the print job and click the **Delete** icon.
   - To pause a print job, click the print job and click the **Hold** icon. To resume a print job, click the print job marked "Hold" and click the **Resume** icon.
   - To pause printing for all queued print jobs, click the **Pause Printer** icon.
   - To check ink status, click the **Supply Levels** icon.

   **OS X 10.8/10.9**:

   - To cancel printing, click the button next to the print job.
   - To pause a print job, click the button next to the print job. To resume a print job, click the button.
   - To pause printing for all queued print jobs, click the large **Pause** button.
   - To check ink status, click the **Settings** icon, then click the **Supply Levels** tab.

**Parent topic:** Printing Your Document or Photo - PostScript Printer Software - OS X

## Cancelling Printing Using a Product Button

If you need to cancel printing, press the **Stop** button on your product.

**Parent topic:** Printing from a Computer

# Scanning

You can scan original documents or photos and save them as digital files.

Starting a Scan
Selecting Epson Scan Settings
Scanning with OS X Using Image Capture
Scanning Special Projects
Entering a User ID and Password for Scanning - Windows

## Starting a Scan

After placing your original documents or photos on your product for scanning, start scanning using one of these methods.

Starting a Scan Using the Product Control Panel
Starting a Scan with Document Capture Pro or Document Capture
Starting a Scan Using the Epson Scan Icon
Starting a Scan from a Scanning Program

**Parent topic:** Scanning

**Related topics**

Placing Originals on the Product

### Starting a Scan Using the Product Control Panel

You can scan an image to a memory device or to your computer using your product's control panel.

1. Make sure you installed the product software and connected the product to your computer or network.

   **Note:** Restart your computer after installing the product software to enable scanning from the control panel. Also make sure the Event Manager program is not being blocked by your firewall or security software.

2. Place your original on the product for scanning.

   **Note:** To scan a double-sided document, place it in the ADF and select the **2-Sided** setting.

3. Press the home button, if necessary.
4. Select **Scan**.

   You see a screen like this:

5. Select one of the following **Scan to** options:
   - **Email** lets you send scanned files through a pre-configured email server.
   - **Network Folder/FTP** saves your scan file to a specified folder on a network.
   - **Memory Device** saves your scan file on a memory or USB device and lets you select the file format, quality, and other settings.
   - **Cloud** sends your scanned files to a destination that you have registered with Epson Connect.
   - **Document Capture Pro** allows you to scan over a network using your saved job settings in Document Capture Pro or Document Capture.

     **Note:** You cannot use this option to scan an image to Document Capture or Document Capture Pro when your product is connected to your computer's USB port.

   - **Computer (WSD)** lets you manage network scanning in Windows 8.x, Windows 7, or Windows Vista (English only). To use this feature, you must first set up WSD (Web Services for Devices) on the computer.
6. Select **Preset** to save your scan settings.

   **Note:** Presets can be locked by an administrator. If you cannot access or change this setting, contact your administrator for assistance.

7. Do any of the following, as necessary:
   - Select the email address, location, destination, or computer, as necessary.
   - Select **Contacts** to choose an email address or network folder.
   - Select **Format** to choose the file format.
   - Select **Settings** to display additional scanning options.

Scanning to Email
Scanning to a Network Folder or FTP Server
Control Panel Scanning Options
Creating Contacts for Scanning
Adding and Assigning Scan Jobs

**Parent topic:** Starting a Scan

**Related tasks**

Using Epson Scan to Cloud
Using Presets
Entering Characters on the LCD Screen

**Related topics**

Placing Originals on the Product

## Scanning to Email

You can scan an image and email the scanned file using your product's control panel. You need to have a preconfigured email server before you can scan to email. You can either enter the email address directly on the product's control panel or select an address from the **Contacts** list. Make sure the date and time are set correctly so the time stamps on your emails are accurate.

**Note:** You can also use the Scan to Document Capture Pro function to scan and email the scanned file.

1. Place your original on the product for scanning.

   **Note:** To scan a double-sided document, place it in the ADF and select the **2-Sided** setting.

2. Press the home button, if necessary.
3. Select **Scan**.

You see a screen like this:

4. Select **Email**.

   You see a screen like this:

5. Do one of the following:
   - Select **Contacts** and choose an email address.
   - Select **Enter Email Address**, then select **Enter Email Address** again to display the keyboard. Use the keyboard to enter the address for the recipient, and press ↵.
6. Select **Format** to choose the file format for your scan.
7. Select **Menu** and select **Email Settings**. Change the **Subject** and **Filename Prefix** if necessary, then press the ↩ back button to return to the Email screen.

8. Select **Preset** to save your scan settings.

   **Note:** Presets can be locked by an administrator. If you cannot access or change this setting, contact your administrator for assistance.

9. Press one of the ◇ buttons.

   Your product scans your original and emails the scanned file.

**Parent topic:** Starting a Scan Using the Product Control Panel

**Related tasks**

Entering Characters on the LCD Screen
Configuring Email Server Settings
Selecting the Date and Time

**Related topics**

Placing Originals on the Product

### Scanning to a Network Folder or FTP Server

You can scan an image and save it to a network folder using your product's control panel. You can either enter the folder path directly on the product's control panel or select a folder from the **Contacts** list.

**Note:** Make sure the date and time are set correctly before using this feature.

1. Place your original on the product for scanning.

   **Note:** To scan a double-sided document, place it in the ADF and select the **2-Sided** setting.

2. Press the ⌂ home button, if necessary.
3. Select **Scan**.

You see a screen like this:

4. Select **Network Folder/FTP**.

   You see a screen like this:

5. Do one of the following:
   - Select **Contacts** and choose a saved location.
   - Select **Enter Location**, then select the **Communication Mode**, **Location**, and other settings.

     **Note:** Enter the folder path name for the Location setting in one of the following formats depending on the Communication Mode setting you selected:
     - **SMB**: \\host name\folder
     - **FTP**: ftp://host name/folder name

6. Select **Format** to choose the file format for your scan.

7. Select **Menu** and select **File Settings**. Change the **Filename Prefix** if necessary, then press the back button to return to the **Folder/FTP** screen.
8. Select **Preset** to save your scan settings.

   **Note:** Presets can be locked by an administrator. If you cannot access or change this setting, contact your administrator for assistance.

9. Press one of the ◇ buttons.

   Your product scans your original and saves it in the selected location.

**Parent topic:** Starting a Scan Using the Product Control Panel

**Related references**

Control Panel Scanning Options

**Related tasks**

Entering Characters on the LCD Screen
Selecting the Date and Time
Creating Contacts for Scanning
Entering Characters on the LCD Screen

**Related topics**

Placing Originals on the Product

## Control Panel Scanning Options

Select the options you want to use for scanning.

**Note:** Not all options or settings may be available, depending on the **Scan to** option selected.

| Scan to setting | Available options | Description |
|---|---|---|
| **Subject** | — | Lets you enter a subject for your email |
| **Filename Prefix** | — | Lets you enter a filename prefix for your scanned file |

| Scan to setting | Available options | Description |
|---|---|---|
| **Location** | **Communication Mode** | Lets you select **Network Folder (SMB)** or **FTP** |
| | **Location** | Lets you enter a folder path in which to save scanned images |
| | **User Name** | Lets you enter a user name for the selected folder path |
| | **Password** | Lets you enter a password for the selected folder path |
| | **Connection Mode** | Lets you select the connection mode |
| | **Port Number** | Lets you enter a port number |
| **Format** | **JPEG** | Select for photos |
| | **PDF** | Select for documents |
| | **TIFF (Single Page)** | Select for scanned files that you can print from a device. Multi Page TIFF documents are scanned in black and white. |
| | **TIFF (Multi Page)** | |
| **Resolution** | **200dpi** | Select for documents |
| | **300dpi** | Select for photos |
| | **600dpi** | Select for highest quality printing |
| **Scan Area** | **Letter** | Select the page size for documents |
| | **A4** | |
| | **Legal** | |
| | **Half Letter** | |
| | **Executive** | |
| | **Auto Cropping** | Select for photos with dark edges |
| | **Max Area** | Select for most photos |
| **2-Sided** | **Off** | Lets you scan 2-sided originals placed in the ADF. If you select **On**, you can also select the **Binding Direction**. |
| | **On** | |

| Scan to setting | Available options | Description |
|---|---|---|
| **Document Type** | **Text** | Specifies the type of original you are scanning |
| | **Text & Image** | |
| | **Photo** | |
| **Density** | **–4** to **+4** | Adjusts the lightness or darkness of scanned images. |
| **Document Orientation** | **Portrait** | Specifies the orientation of PDF documents |
| | **Landscape** | |
| **Compression Ratio** | **High** | Select **High** for smaller file size or **Low** for best quality |
| | **Middle** | |
| | **Low** | |
| **PDF Settings** | **Document Open Password** | Lets you set a password for opening the document |
| | **Permissions Password** | Lets you set a password for printing or editing the document |
| **Attached File Max Size** | Various sizes | Lets you select the maximum file size that can be attached to an email |

**Note:** When you turn on password settings, you can use the LCD screen keyboard to set the password.

**Parent topic:** Starting a Scan Using the Product Control Panel

### Creating Contacts for Scanning

You can create a list of contacts for scanning to email or locations for scanning to a network folder or FTP.

**Note:** Contacts can be locked by an administrator. If you cannot access or change contacts, contact your administrator for assistance. You can create up to 200 contacts and contact groups combined (including fax contacts).

1. Press the home button, if necessary.
2. Select **Contacts**. Enter the administrator password, if necessary.
3. Select **Menu**.

You see a screen like this:

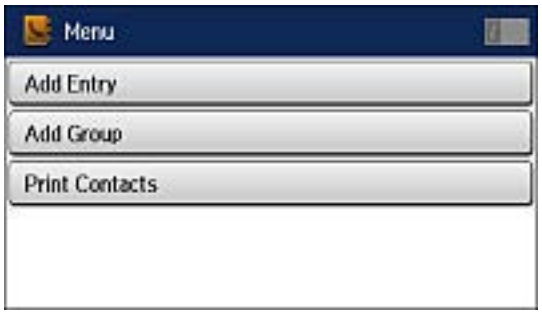


**Note:** You can print your list of contacts and groups if necessary.

4. Select **Add Entry**.
   You see a screen like this:

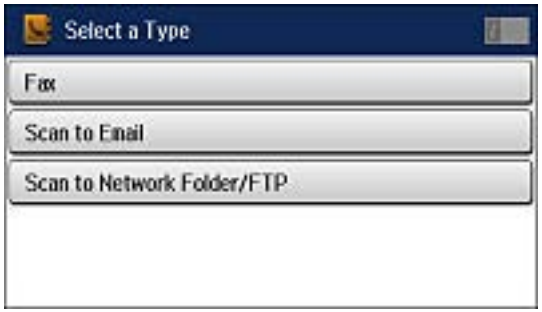


5. Do one of the following:
   - To create a contact for scanning to email, select **Scan to Email**.
   - To create a location for scanning to a network folder or FTP, select **Scan to Network Folder/FTP**.
6. Select the number you want to use for the contact you are adding.
7. Select the **Name** field, use the displayed keyboard to enter the contact name (up to 30 characters), and press .

8. Select the **Index Word** field, use the displayed keyboard to enter a word to use when searching for an entry (up to 30 characters), and press . (This field is optional.)
9. Do one of the following:
   - For an email contact, select the **Email address** field, use the displayed keyboard to enter the address, and press .
   - For a network folder or FTP location, select the **Communication Mode** field and select **Network Folder (SMB)** or **FTP**. Then select the **Location** field, use the displayed keyboard to enter the location, and press . Enter other information if necessary.
10. Select **Save**.

**Note:** If you need to edit or delete scanning contacts, the procedures are the same as for fax contacts.

**Parent topic:** Starting a Scan Using the Product Control Panel

**Related tasks**

Entering Characters on the LCD Screen

Editing or Deleting a Contact

**Related topics**

Setting Up Contacts Using the Product Control Panel

## Adding and Assigning Scan Jobs

You can view, change, or add available default scan settings when you scan using the Document Capture Pro option on the product control panel. You do this by accessing the scan jobs in the Document Capture Pro (Windows) or Document Capture (OS X) program.

1. Start Document Capture Pro or Document Capture on a computer connected to the product.
2. Click the Manage Job icon from the toolbar at the top of the window.

   You see a window showing the current scan job list.
3. If you want to add a scan job, click **Add** or the **+** icon, enter a name for the new job, select settings as necessary, and click **OK**.

   You can now use the new scan job when you scan with Document Capture Pro or Document Capture.

   **Note:** See the Help information in Document Capture Pro or Document Capture for details.

4. If you want to assign scan jobs to the selection list on the product control panel, do one of the following:
   - **Windows**: Click **Event Settings**.
   - **OS X**: Click the icon at the bottom of the window, then click **Event Settings**.
5. Select the jobs that you want to assign to any of the pull-down menus, click **OK**, then click **OK** again.

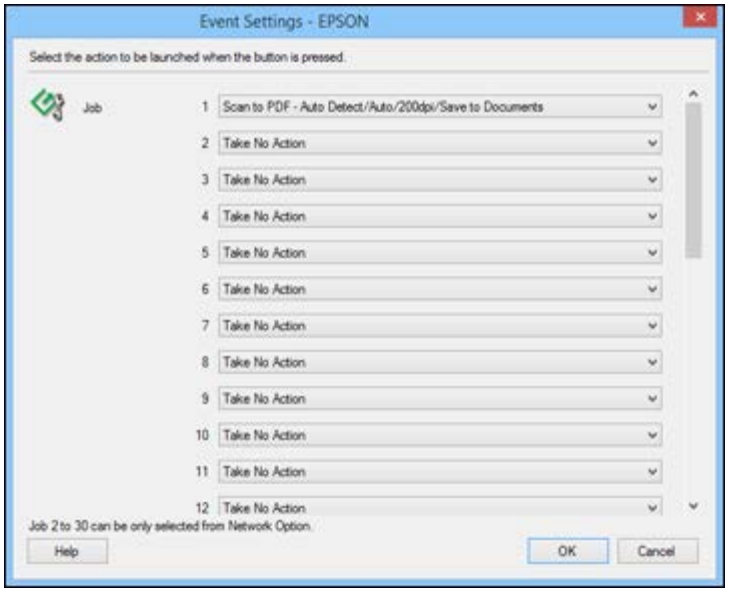


You can now use the added scan jobs when you scan from the product control panel.

**Parent topic:** Starting a Scan Using the Product Control Panel

## Starting a Scan with Document Capture Pro or Document Capture

When you scan with Document Capture Pro (Windows) or Document Capture (OS X), the program automatically saves your scanned file on your computer in the folder you specify. You can select settings, preview, and change the scanned file settings as necessary.

1. Do one of the following to start Document Capture Pro or Document Capture:
   - **Windows 8.x**: Navigate to the **Apps** screen and select **Document Capture Pro**.

- **Windows (other versions)**: Click or **Start**, and select **All Programs** or **Programs**. Select **EPSON Software**, then select **Document Capture Pro**.
- **OS X**: Open the **Applications** folder, select the **Epson Software** folder, and select **Document Capture**. Select your product and click **OK**, if necessary.

You see a window like this:

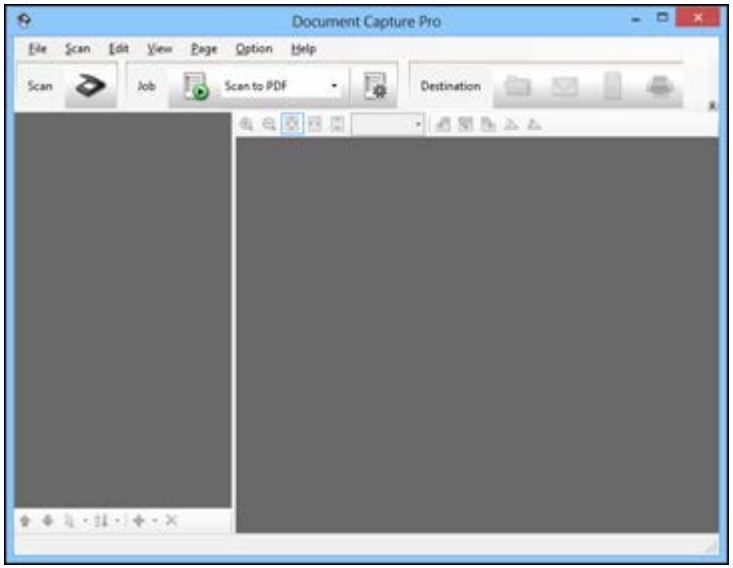


2. Click the Scan icon.

You see a window like this:

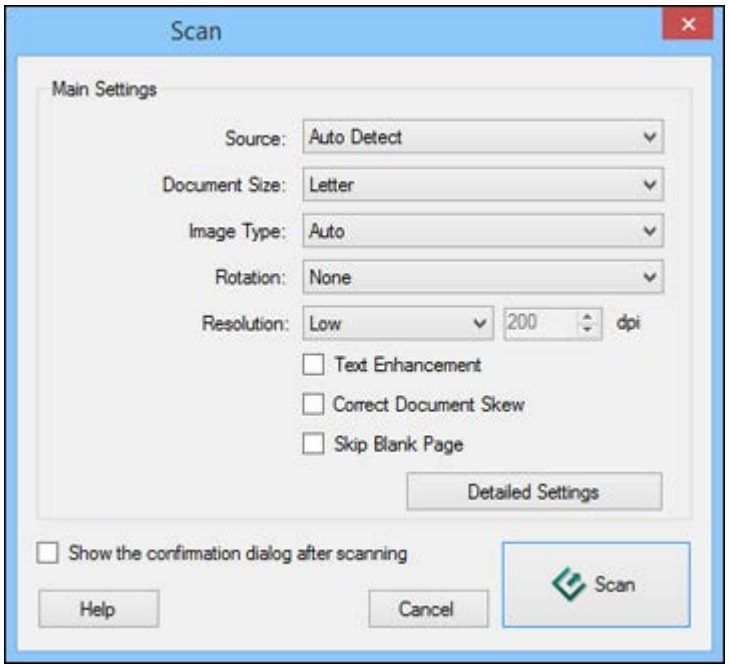


**Note:** With OS X, you can download and install Epson Scan scanning software, which will provide additional image adjustment features within Document Capture. To download Epson Scan, visit Epson's driver download site (U.S. downloads or Canadian downloads).

3. If you want to use a scan job that you created instead, select it from the Job list in the Document Capture Pro or Document Capture window, click the Start Job button, and skip the rest of these steps.
4. Select any displayed scan settings you want to use.

   **Note:** See the Help information in Document Capture Pro or Document Capture for details.

5. If you want to select detailed scan settings, do one of the following:
   - **Windows**: Click **Detailed Settings**. Select any displayed scan settings you want to use and click **OK**.

- **OS X**: If you installed Epson Scan, close the Scan Settings window, open the **Scan** menu at the top of the screen and select **Displays the EPSON Scan Setup Screen**. Click the Scan icon. Select any displayed scan settings you want to use and click **OK**.

6. Click **Scan**.

   You see a preview of your scan in the Document Capture Pro or Document Capture window.

7. Check the scanned images and edit them as necessary.
8. Click one of the Destination icons to choose where to save your scanned file.

**Note:** You may need to click the arrow next to the icons in order to see all of them. The available icons may vary, depending on the software version you are using.

9. Select settings as necessary, then click **OK**, **Send**, or **Print** to save the scanned file.

**Parent topic:** Starting a Scan

**Related topics**

Placing Originals on the Product

## Starting a Scan Using the Epson Scan Icon

You can start the Epson Scan program to select scan settings, scan, and save the scanned image to a file.

- **Windows 8.x**: Navigate to the **Apps** screen and select **EPSON Scan** under **EPSON** or **EPSON Software**.
- **Windows (other versions)**: Click or **Start**, and select **All Programs** or **Programs**. Select **EPSON** or **EPSON Software** and click **EPSON Scan**.
- **OS X**: Open the **Applications** folder, open the **Epson Software** folder, and double-click the **EPSON Scan** icon.

**Note:** With OS X, in addition to scanning with Image Capture, you can download and install Epson Scan scanning software. Epson Scan provides additional image adjustment and photo correction features for enhancing scanned images, and provides an interface for TWAIN-compliant OCR

scanning software. To download Epson Scan, visit Epson's driver download site (U.S. downloads or Canadian downloads).

You see an Epson Scan window like this:

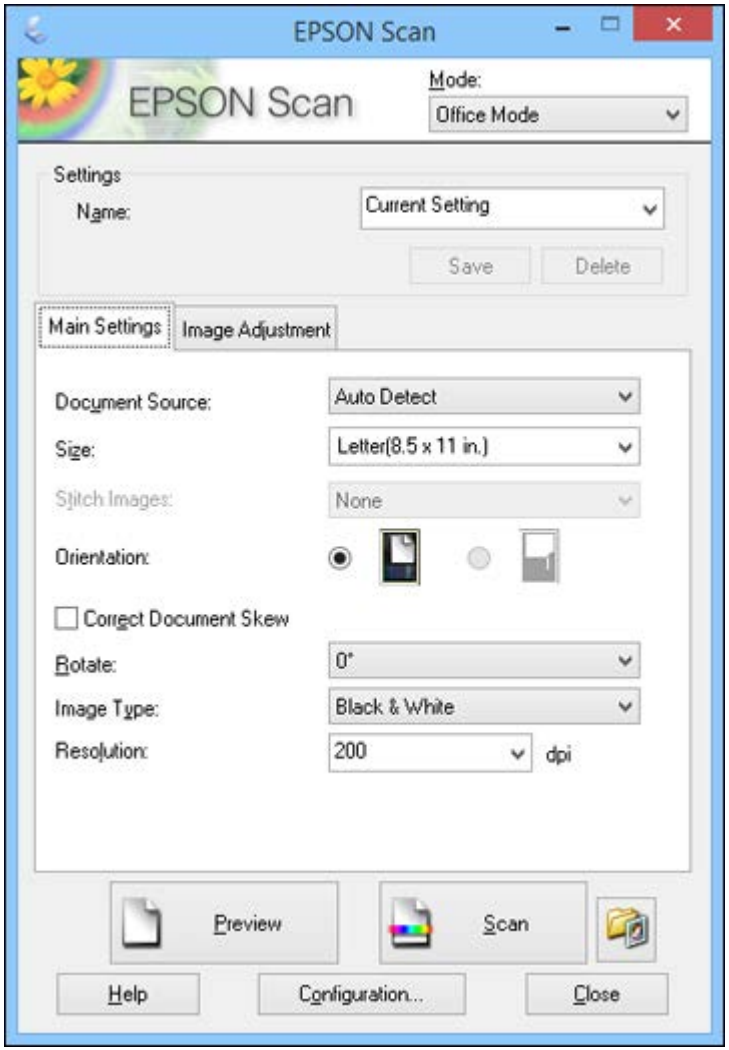


**Parent topic:** Starting a Scan

**Related tasks**

Scanning with OS X Using Image Capture

Entering a User ID and Password for Scanning - Windows

**Related topics**

Placing Originals on the Product

## Starting a Scan from a Scanning Program

You can start Epson Scan from a scanning program to select scan settings, scan, and open the scanned image in the program.

**Note:** With OS X, in addition to scanning with Image Capture, you can download and install Epson Scan scanning software. Epson Scan provides additional image adjustment and photo correction features for enhancing scanned images, and provides an interface for TWAIN-compliant OCR scanning software. To download Epson Scan, visit Epson's driver download site (U.S. downloads or Canadian downloads).

1. Open your scanning program and select its scanning option. (See your scanning program help for instructions.)
2. Select your product.

   **Note:** In certain programs, you may need to select your product as the "source" first. If you see a **Select Source** option, choose it and select your product. With Windows, do not select a **WIA** option for your product; it will not work correctly.

You see an Epson Scan window like this:

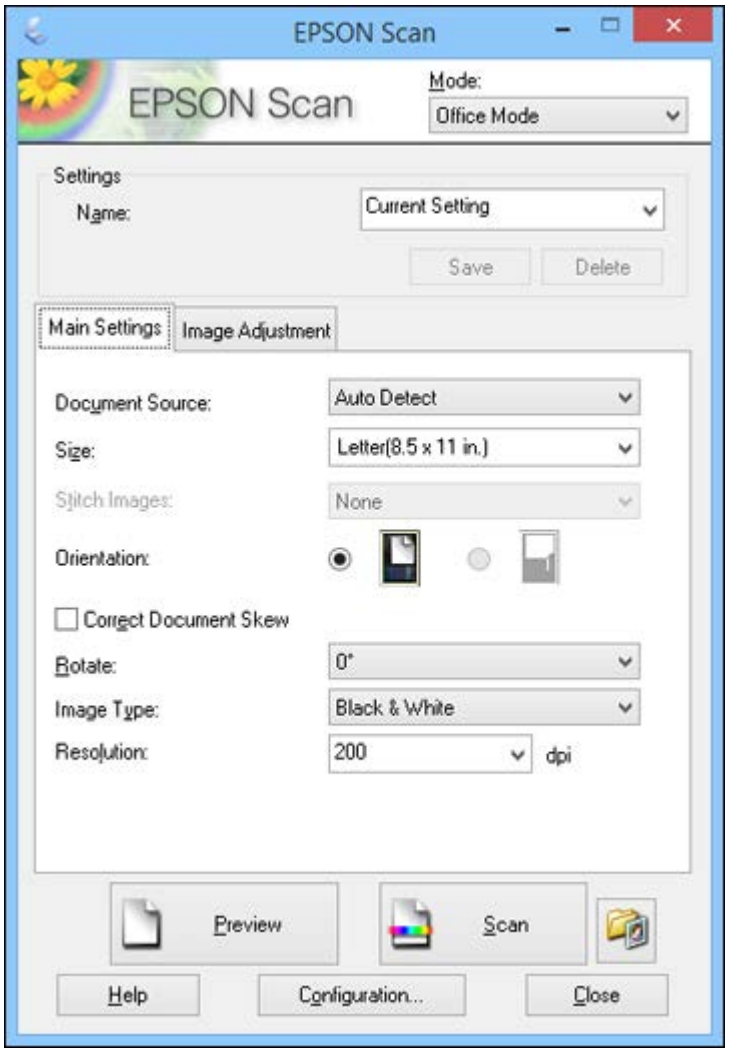


**Note:** Epson Scan may start in a different mode when you first access it.

**Parent topic:** Starting a Scan

**Related tasks**

Entering a User ID and Password for Scanning - Windows

**Related topics**

Placing Originals on the Product

# Selecting Epson Scan Settings

After starting Epson Scan, you can select settings in various modes to customize your scan.

Scan Modes
Selecting the Scan Mode
Scanning in Office Mode
Scanning in Professional Mode
Image Preview Guidelines
Scan Resolution Guidelines
Selecting Scan File Settings

**Parent topic:** Scanning

## Scan Modes

Epson Scan provides a choice of scan modes with different levels of control over your settings.

**Office Mode**
You can quickly scan text documents and adjust them on a preview screen. You can also select various image adjustment options and preview your scanned image.

**Professional Mode**
You can manually customize all available settings, and preview and size your scanned image.

**Parent topic:** Selecting Epson Scan Settings

## Selecting the Scan Mode

Select the Epson Scan mode you want to use from the Mode box in the upper right corner of the Epson Scan window:

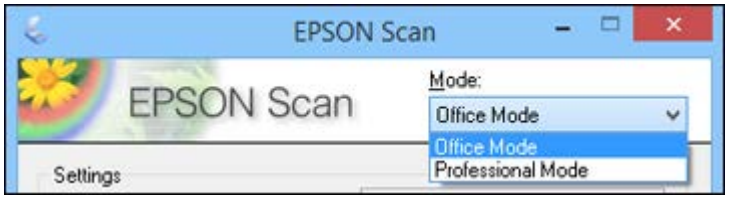


**Parent topic:** Selecting Epson Scan Settings

## Scanning in Office Mode

When you scan in Office Mode, Epson Scan automatically saves your scanned file in PDF format in your operating system's Documents or My Documents folder, or opens it in your scanning program. You can select settings, preview, and change the scanned file settings as necessary.

1. Start Epson Scan and select **Office Mode** as the Mode setting.

You see this window:

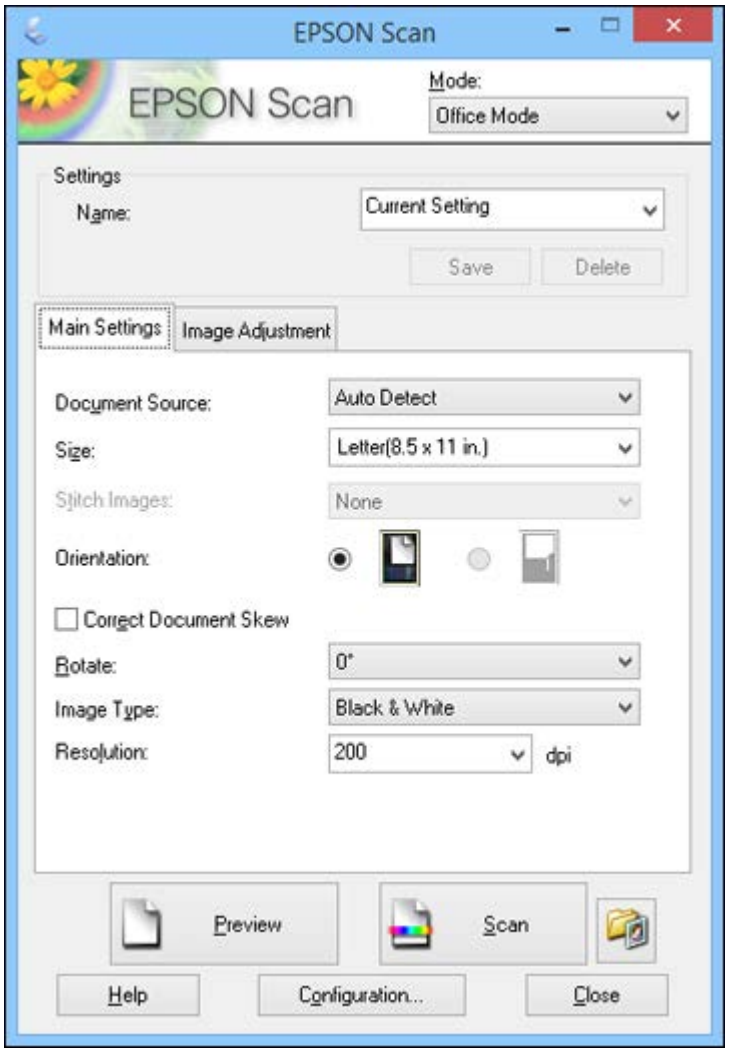


2. Select the **Document Source** setting indicating where you placed your original. To scan a 2-sided document in the ADF, select **ADF-Double-sided**.

   **Note:** If you are using the ADF, remove any documents from the scanner glass.

3. Select the **Size** and **Orientation** settings that match your original.
4. To scan both sides of a 2-sided original into one image, select a **Stitch Images** setting.

   **Note:** To use the Stitch Images setting, you must select **ADF-Double-sided** as the **Document Source** setting.

5. To allow Epson Scan to detect and correct any skew in your original, select **Correct Document Skew**.
6. To rotate your original in your scan, select a **Rotate** setting.
7. Select the **Image Type** setting that matches your original.
8. Select the **Resolution** setting you want to use for your scan.
9. Click the **Preview** button.

   Epson Scan previews your original and displays the result in a separate Preview window.
10. If you are using the ADF, reinsert your original into the ADF.
11. If desired, select the area in your preview image that you want to scan (scan area).

    **Note:** You cannot select a scan area if you chose **ADF-Double-sided** as the **Document Source** setting.

12. Click the **Image Adjustment** tab and select any of the image adjustment settings you want to use. Before making adjustments, click the image or scan area in the Preview window.
13. Click **Scan**.

    You see the File Save Settings window.
14. Change any of the necessary file save settings and click **OK**.

Epson Scan scans your original, and saves the file in the selected folder or opens it in your scanning program. If the file was saved directly to your computer, you see the file in the Windows Explorer or OS X Finder, where you can view and print the image, if desired.

Available Document Source Settings - Office Mode

Selecting a Scan Area - Office Mode

Available Image Adjustments - Office Mode

**Parent topic:** Selecting Epson Scan Settings

**Related concepts**

Image Preview Guidelines

Scan Resolution Guidelines

**Related tasks**

Scanning in Professional Mode

Selecting Scan File Settings

### Available Document Source Settings - Office Mode

You can select these Document Source options in Epson Scan Office Mode.

**Scanner Glass**
Selects the scanner glass as the location where the originals are placed on your product for scanning.

**ADF - Single-sided**
Selects the Automatic Document Feeder as the location where the originals are placed on your product for single-sided scanning.

**ADF - Double-sided**
Selects the Automatic Document Feeder as the location where the originals are placed on your product for double-sided scanning.

**Auto Detect**
Automatically detects where the originals are placed on your product for scanning.

**Parent topic:** Scanning in Office Mode

### Selecting a Scan Area - Office Mode

You can select a specific area in your preview image to include in your scanned image. You can select the entire image area or a portion of it. You can even select multiple scan areas to create multiple scanned images of different areas.

You can also use the scan area to select specific Image Adjustments settings for a scanned image. Just be sure to click inside the scan area before selecting the settings.

1. In the Preview window, click the Auto Locate icon to create a marquee (dotted line) on the preview image.

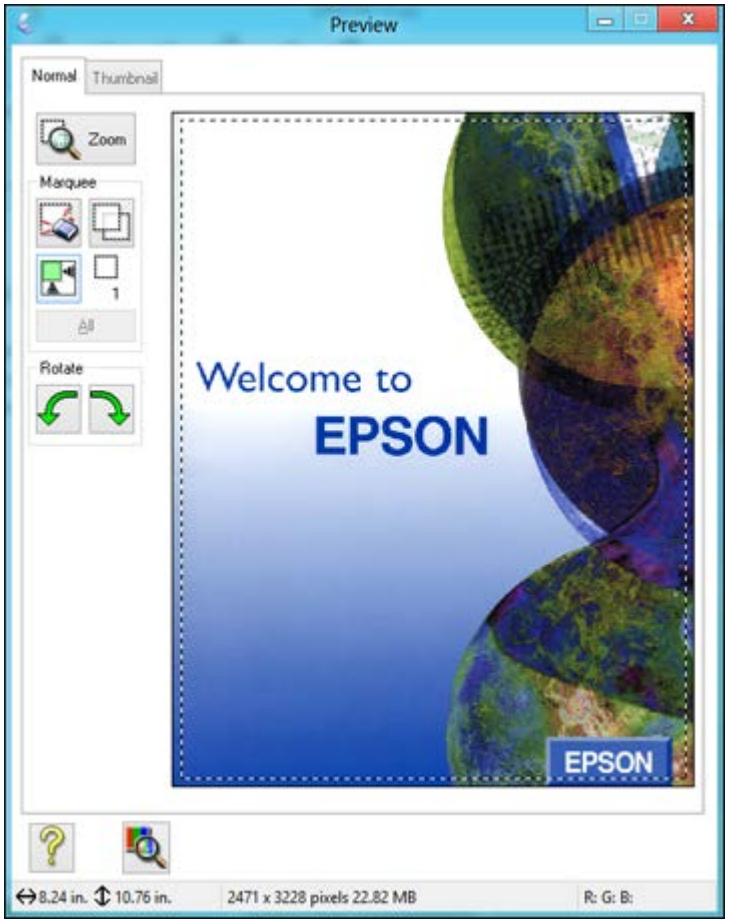


2. Do the following, as necessary, to work with the selected scan area:
   - If the marquee is correct, continue with the next step.
   - To move the marquee, click inside the scan area and drag the marquee where you want it.

- To resize the scan area, place your cursor over the edge or corner of the marquee, then click and drag the edges where you want them. (Hold down the **Shift** key as you resize the marquee to retain the same width/height proportions.)
- To create additional marquees (up to 50, if available), click the Copy Marquee icon to copy the existing marquee and paste it on the preview image.

  **Note:** If you draw multiple marquees, make sure you select the **All** button in the Preview window before you scan. Otherwise, only the area inside the currently selected marquee will be scanned.

- To delete a marquee, click the marquee, then click the Delete Marquee icon.
- To rotate your original in your scan, click one of the **Rotate** icons.

3. Click inside each scan area and make any necessary settings in the Epson Scan window.

**Parent topic:** Scanning in Office Mode

**Related concepts**

Image Preview Guidelines

Scan Resolution Guidelines

**Related tasks**

Selecting Scan File Settings

### Available Image Adjustments - Office Mode

You can select these Image Adjustments options in Epson Scan Office Mode. Not all adjustment settings may be available, depending on other settings you have chosen.

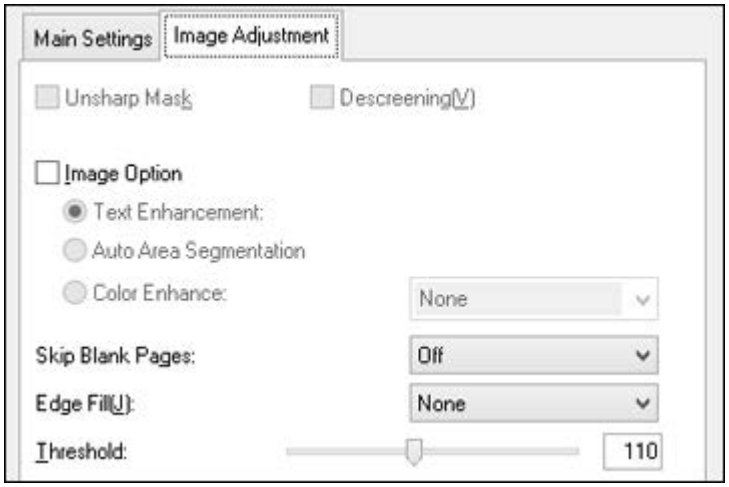


**Note:** Select the **Image Option** checkbox if you need to set any of the grayed-out image adjustments beneath the checkbox. Not all adjustment settings may be available, depending on the Image Type setting.

**Unsharp Mask**
Makes the edges of certain image areas clearer. Turn off this option to leave softer edges.

**Descreening**
Removes the ripple pattern that might appear in subtly shaded image areas, such as skin tones. This option improves results when scanning magazines or newspapers. (The results of descreening do not appear in the preview image, only in your scanned image.)

**Text Enhancement**
Sharpens the appearance of letters in text documents.

**Auto Area Segmentation**
Makes grayscale images clearer and text recognition more accurate by separating the text from the graphics.

**Color Enhance**
Enhances the red, green, or blue shades in the scanned image.

**Skip Blank Pages**
Ensures that your product does not scan pages that contain no text or images.

**Edge Fill**
Corrects shadowing around the edges of the image by filling the shadows with the color you select.

**Brightness**
Adjusts the overall lightness and darkness of the scanned image.

**Contrast**
Adjusts the difference between the light and dark areas of the overall scanned image.

**Threshold**
Adjusts the level at which black areas in text and line art are delineated, improving text recognition in OCR (Optical Character Recognition) programs.

**Parent topic:** Scanning in Office Mode

## Scanning in Professional Mode

When you scan in Professional Mode, Epson Scan automatically saves your scanned file in PDF format in your operating system's Documents or My Documents folder, or opens it in your scanning program. You can select settings, preview, and change the scanned file settings as necessary.

1. Start Epson Scan and select **Professional Mode** as the Mode setting.

You see this window:

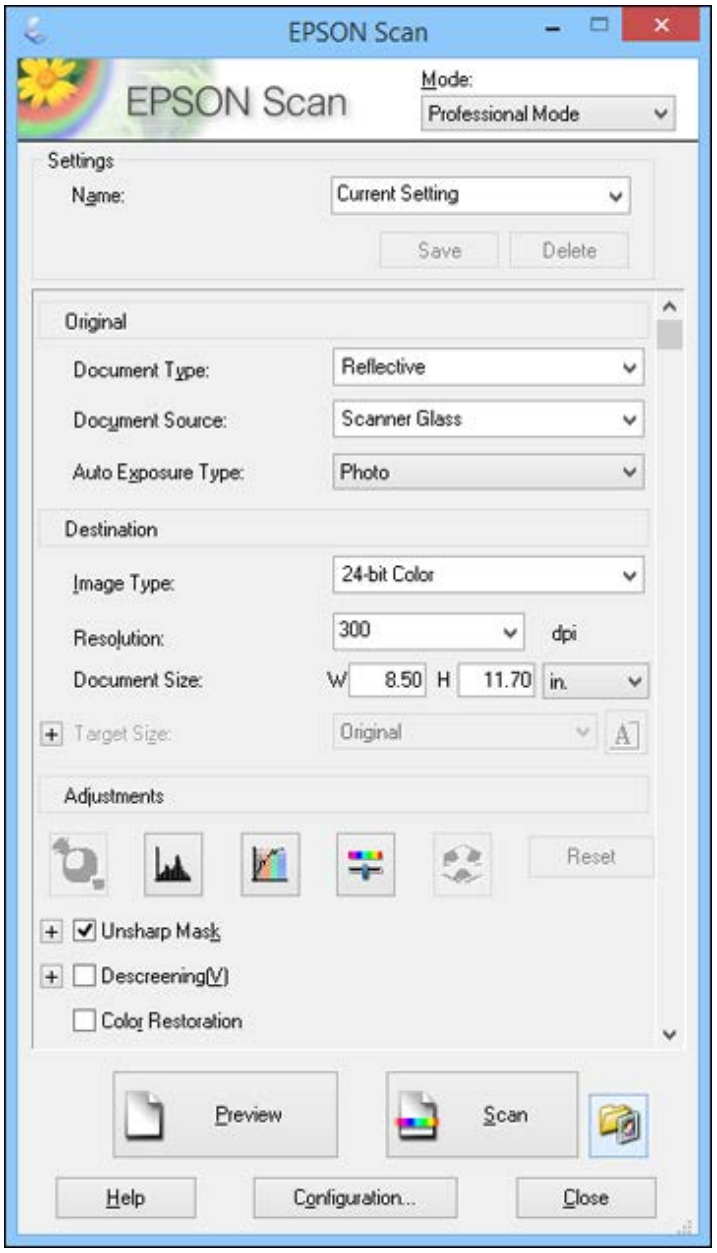

2. Select the **Document Type** setting that matches your original, such as **Reflective** for documents or photos.
3. Select the **Document Source** setting indicating where you placed your original. To scan a 2-sided document in the ADF, select **ADF - Double-sided**.

   **Note:** If you are using the ADF, remove any documents from the scanner glass.

4. Select the specific type of original you are scanning as the **Auto Exposure Type** setting: **Document** or **Photo**.
5. Select the details of your original and how you want it scanned as the **Image Type** setting.
6. Select the **Resolution** setting you want to use for your scan.
7. Click the **Preview** button.

   Epson Scan previews your original and displays the result in a separate Preview window.
8. If you are using the ADF, reinsert your original into the ADF.
9. If desired, select the area in your preview image that you want to scan (scan area).

   **Note:** You cannot select a scan area if you chose **ADF-Double-sided** as the **Document Source** setting.

10. Select any of the image adjustment settings you want to use. Before making adjustments, click the image or scan area in the Preview window.
11. If you want to reduce or enlarge your image as you scan, select the **Target Size** setting you want to use.

    **Note:** You cannot select a target size if you chose **ADF-Double-sided** as the **Document Source** setting.

12. Click **Scan**.

    You see the File Save Settings window.
13. Change any of the necessary file save settings and click **OK**.

Epson Scan scans your original, and saves the file in the selected folder or opens it in your scanning program. If the file was saved directly to your computer, you see the file in the Windows Explorer or OS X Finder, where you can view and print the image, if desired.

Available Document Source Settings - Professional Mode

Available Image Types - Professional Mode
Selecting a Scan Area - Professional Mode
Available Image Adjustments - Professional Mode
Selecting a Scan Size - Professional Mode

**Parent topic:** Selecting Epson Scan Settings

**Related concepts**

Image Preview Guidelines
Scan Resolution Guidelines

**Related tasks**

Scanning in Office Mode
Selecting Scan File Settings

## Available Document Source Settings - Professional Mode

You can select these Document Source options in Epson Scan Professional Mode.

**Scanner Glass**
Selects the scanner glass as the location where the originals are placed on your product for scanning.

**ADF - Single-sided**
Selects the Automatic Document Feeder as the location where the originals are placed on your product for single-sided scanning.

**ADF - Double-sided**
Selects the Automatic Document Feeder as the location where the originals are placed on your product for double-sided scanning.

**Parent topic:** Scanning in Professional Mode

## Available Image Types - Professional Mode

You can select these Image Type options in Epson Scan Professional Mode.

**24-bit Color**
Select this setting for color photos.

**Color Smoothing**
Select this setting for color graphic images, such as charts or graphs.

**8-bit Grayscale**
Select this setting for black-and-white photos.

**Black & White**
Select this setting for black text documents or line art.

**Parent topic:** Scanning in Professional Mode

## Selecting a Scan Area - Professional Mode

You can select a specific area in your preview image to include in your scanned image. You can select the entire image area or a portion of it. You can even select multiple scan areas to create multiple scanned images of different areas (Normal Preview mode only).

You can also use the scan area to select specific image Adjustments settings for a scanned image. Just be sure to click inside the scan area before selecting the settings.

**Note:** In Professional Mode, the default Preview mode is Normal Preview mode. To use Thumbnail Preview mode instead, click the **Thumbnail** tab.

1. Do one of the following to select your scan area in the Preview image:

   - **Normal preview**: Click the Auto Locate icon to create a marquee (dotted line) on the preview image.

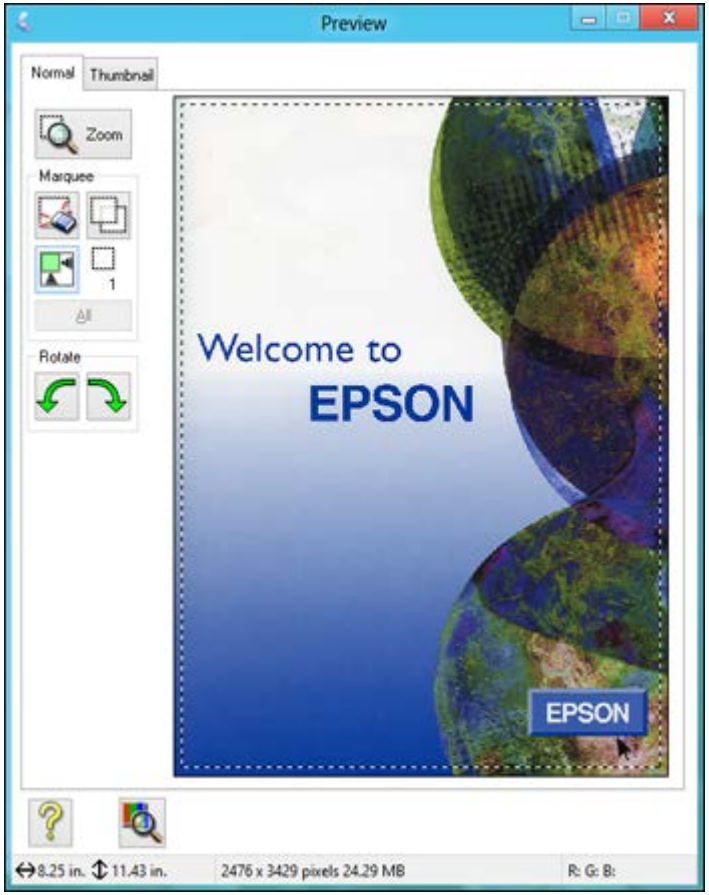

- **Thumbnail preview**: Your scan area is selected automatically, but you can change it. Place your cursor in one corner of the desired scan area, then click and drag the cursor to the opposite corner to create a marquee (dotted line) on the preview image.

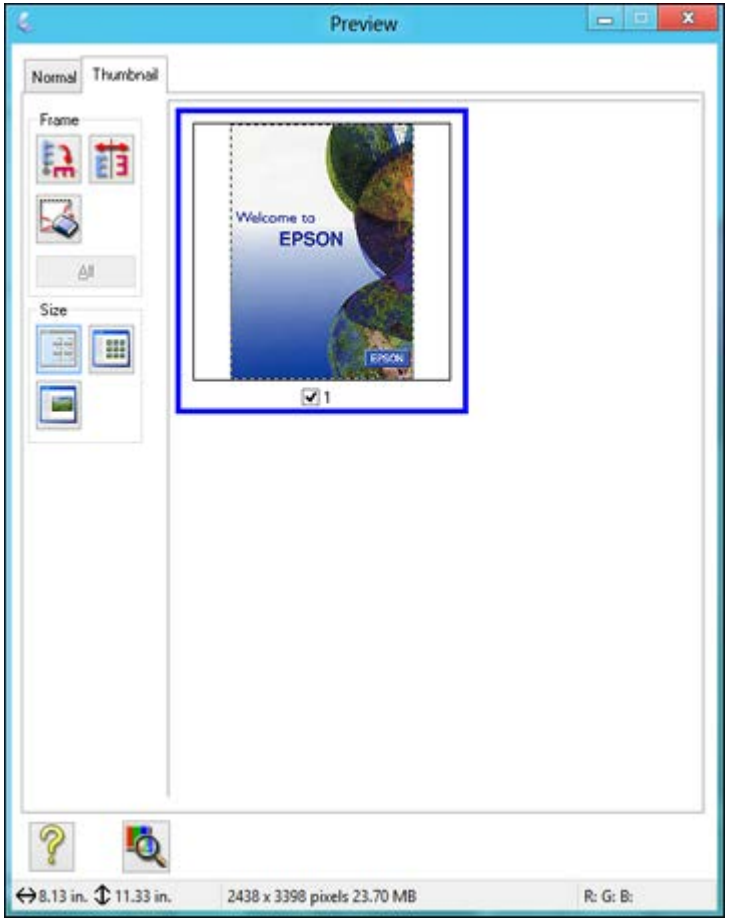


2. Do the following, as necessary, to work with the selected scan area:
   - If the marquee is correct, continue with the next step.
   - To move the marquee, click inside the scan area and drag the marquee where you want it.

- To resize the scan area, place your cursor over the edge or corner of the marquee, then click and drag the edges where you want them. (Hold down the **Shift** key as you resize the marquee to retain the same width/height proportions.)
- **Normal preview**: To create additional marquees (up to 50, if available), click the Copy Marquee icon to copy the existing marquee and paste it on the preview image.
- To delete a marquee, click the marquee, then click the Delete Marquee icon.
- **Thumbnail preview**: To change the preview style, click one of the **Size** icons.

**Note:** If you draw multiple marquees, make sure you select the **All** button in the Preview window before you scan. Otherwise, only the area inside the currently selected marquee will be scanned.

3. Click inside the scan area and make any necessary settings in the Epson Scan window.

**Parent topic:** Scanning in Professional Mode

## Available Image Adjustments - Professional Mode

You can select these Adjustments options in Epson Scan Professional Mode. Not all adjustment settings may be available, depending on other settings you have chosen.

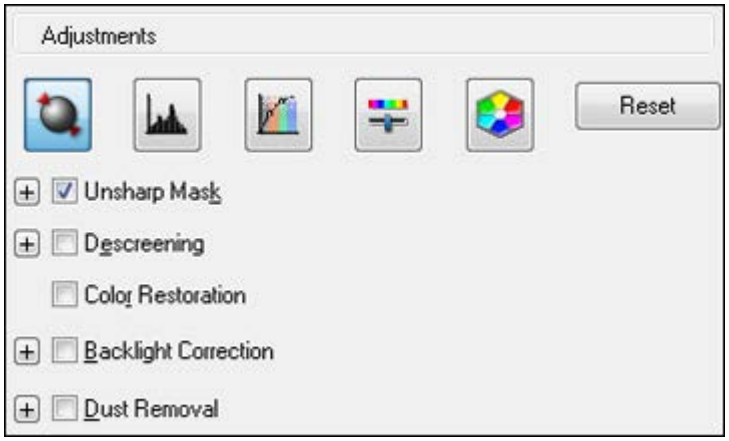


**Note:** Select the **Image Option** checkbox if you need to set any of the grayed-out image adjustments beneath the checkbox.

Click the image adjustment icon to access additional settings.

Click the **+** (Windows) or ▶ (OS X) icon next to a setting to change the level of adjustment.

**Unsharp Mask**
Makes the edges of certain image areas clearer. Turn off this option to leave softer edges.

**Descreening**
Removes the ripple pattern that might appear in subtly shaded image areas, such as skin tones. This option improves results when scanning magazines or newspapers. (The results of descreening do not appear in the preview image, only in your scanned image.)

**Color Restoration**
Restores the colors in faded photos automatically.

**Backlight Correction**
Removes shadows from photos that have too much background light.

**Dust Removal**
Removes dust marks from your originals automatically.

**Color Enhance**
Enhances the red, green, or blue shades in the scanned image.

**Edge Fill**
Corrects shadowing around the edges of the image by filling the shadows with the color you select.

**Auto Exposure**

Automatically adjusts the image exposure settings when you click the Auto Exposure icon. To automatically adjust image exposure settings continuously, click the **Configuration** button, click the **Color** tab, and select **Continuous auto exposure**. You can adjust the level of auto exposure using a slider.

**Histogram Adjustment**
Provides a graphical interface for adjusting highlight, shadow, and gamma levels individually. (For advanced users only.) Click the histogram icon to access the settings.

**Tone Correction**
Provides a graphical interface for adjusting tone levels individually. (For advanced users only.) Click the tone correction icon to access the settings.

**Brightness**
Adjusts the overall lightness and darkness of the scanned image.

**Contrast**
Adjusts the difference between the light and dark areas of the overall scanned image.

**Saturation**
Adjusts the density of colors in the overall image.

**Color Balance**
Adjusts the balance of colors in the overall image.

**Color Palette**
Provides a graphical interface for adjusting mid-tone levels, such as skin tones, without affecting the highlight and shadow areas of the image. (For advanced users only.) Click the Color Palette icon to access the settings.

**Threshold**
Adjusts the level at which black areas in text and line art are delineated, improving text recognition in OCR (Optical Character Recognition) programs.

**Parent topic:** Scanning in Professional Mode

## Selecting a Scan Size - Professional Mode

You can reduce or enlarge the size of your image as you scan. You can also select a specific scan size, such as a common photo size like 4 × 6 inches (102 × 152 mm). This places a scan area of that size on the preview image so you can use it to help crop the image in the correct proportions.

1. Click the **Preview** button to preview your image.
2. In the Epson Scan window, select the size you want your scanned image to be from the **Target Size** list.

**Note:** If you need to rotate the orientation of the target size for your image, click the orientation icon.

A marquee (dotted line) appears on your preview image proportioned for the size you selected.

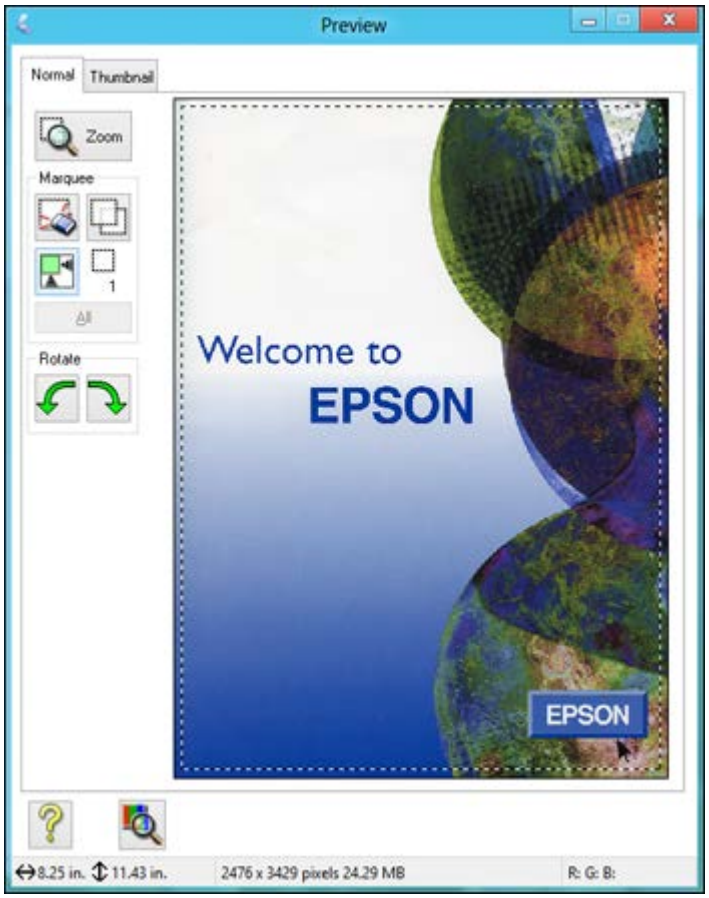


3. Do the following, as necessary, to work with the selected scan area:
   - To move the marquee, click inside the scan area and drag the marquee where you want it.
   - To resize the scan area, place your cursor over the edge or corner of the marquee, then click and drag the edge where you want it.

   **Note:** Manually adjusting the marquee will not change the target size of the scanned file. The marquee only indicates the area of the image that will be scanned.

4. To create a scanned image size that is not available in the Target Size list, click the **Customize** option.

   You see this window:

5. Name the custom size, enter the size, click **Save**, and click **OK**. Then adjust the marquee on the preview image.

   The marquee is automatically proportioned for your custom scan size.

6. To use additional sizing tools, click the **+** (Windows) or ▶ (OS X) icon next to the Target Size setting and select options as desired.

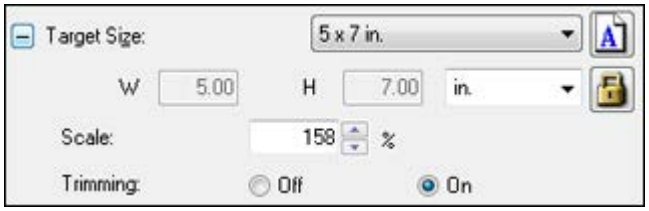


- **Scale**: Reduces or enlarges your image by the percentage you enter.
- **Trimming**: Turns automatic image cropping on or off.
- Unlock icon: Unlocks the width/height proportions of the scanned image size so you can adjust it without constraint.

**Parent topic:** Scanning in Professional Mode

## Image Preview Guidelines

You can preview your scanned image so you can adjust the scan settings using the preview as a guide. There are two types of preview available, depending on the scan mode and selected settings:

**Thumbnail preview**

A thumbnail preview displays your previewed images as thumbnails with the scanned image area and exposure automatically selected.

**Normal preview**

A normal preview displays your previewed images in their entirety so you can select the scanned image area and other settings manually.

**Parent topic:** Selecting Epson Scan Settings

## Scan Resolution Guidelines

If you plan to enlarge a scanned image so you can print it at a larger size, you may need to increase the resolution from the default resolution set by Epson Scan. Follow these guidelines to determine the resolution setting you need:

- You will enlarge the image as you scan it.

  If you will enlarge the image using Epson Scan's Target Size setting, you do not need to increase the Resolution setting.

- You will scan the image at its original size but enlarge it later in an image-editing program.

  Increase Epson Scan's Resolution setting in your scan. Increase the resolution by the same amount you will increase the image size to retain a high image quality. For example, if the resolution is 300 dpi (dots per inch) and you will double the image size later, change the Resolution setting to 600 dpi.
- You will scan the image at 100% or smaller size.

  Select Epson Scan's Resolution setting based on how you will use the scanned image:
  - Email/view on a computer screen/post on the web: 96 to 150 dpi
  - Print/convert to editable text (OCR): 300 dpi
  - Fax: 200 dpi

**Parent topic:** Selecting Epson Scan Settings

## Selecting Scan File Settings

You can select the location, name, and format of your scan file on the File Save Settings window. You can also select various optional settings that control how Epson Scan behaves when you scan and save files.

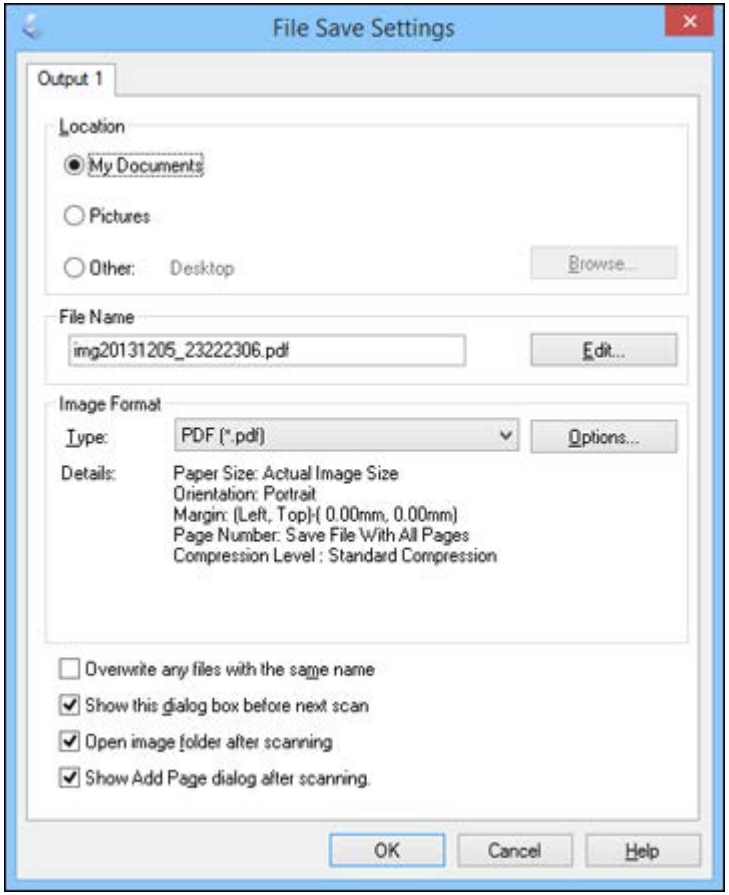


The File Save Settings window may appear after you click **Scan** on the Epson Scan window. You may also be able to access the window by clicking the icon on the Epson Scan window.

1. Do one of the following to select the folder in which you want to save your scanned image:
   - Click the button for one of the displayed folders.

- Click the **Other** button, click the **Browse** or **Choose** button, and select a folder.

2. If you want to change the default name for your scanned image, click **Edit** and select the options you want.
3. Select the file format you want to use in the Image Format **Type** menu.
4. If your file format provides optional settings, click the **Options** button to select them.
5. Choose any of the optional settings you want to use by selecting their checkboxes.
6. Click **OK**.

   If you selected **PDF** or **Multi-TIFF** as the **Type** setting, you see this window after Epson Scan scans your document:

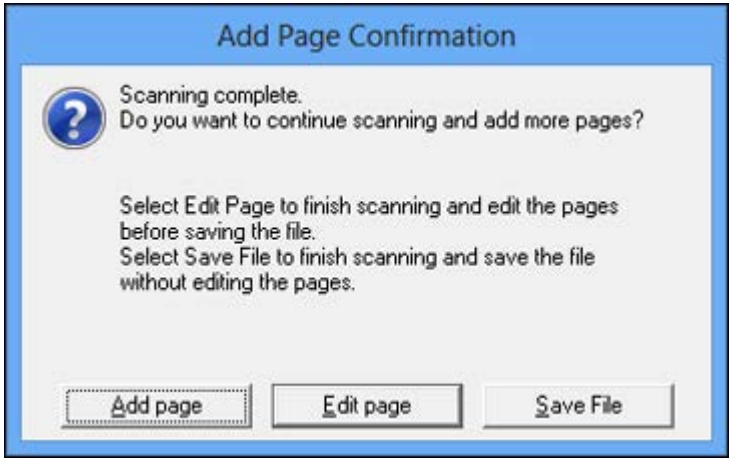


7. Choose one of the following options:
   - If you are scanning only one page, click **Save File**.
   - If you need to scan additional pages in a document, click **Add page**. Place additional pages on the product for scanning, click **Scan**, and repeat until you have scanned all the pages. When you are finished, click **Save File**.

- If you need to delete or reorder the scanned pages, click **Edit page**. Delete or reorder the pages using the icons that appear on the bottom of the editing window. When you are finished, click **OK**.

**Note:** If you installed an OCR (Optical Character Recognition) program, you may see a screen indicating the program is converting your page to text. Wait until the program re-scans the page and close the program, if necessary.

Available Scanned File Types and Optional Settings

**Parent topic:** Selecting Epson Scan Settings

## Available Scanned File Types and Optional Settings

You can select from a variety of scanned file types and optional settings on the File Save Settings window in Epson Scan.

### File Formats

**Bitmap (*.bmp)**
A standard image file format for most Windows programs.

**JPEG (*.jpg)**
An image format that lets you highly compress image data. However, the higher the compression, the lower the image quality. (The TIFF format is recommended when you need to modify or retouch your scanned image.)

**Multi-TIFF (*.tif)**
A TIFF file format when multiple pages are saved to the same file, allowing you to edit the images using a compatible program.

**PDF (*.pdf)**
A document format that is readable by Windows and OS X systems using Adobe Reader, Acrobat, or other programs. You can save multi-page documents in one PDF file.

**PICT (*.pct)**
A standard image file format for most OS X programs.

**TIFF (*.tif)**
A file format created for exchanging data between many programs, such as graphic and DTP software.

### Optional Settings

**Overwrite any files with the same name**
Select to overwrite previous files with the same names.

**Show this dialog box before next scan**
Select to have the File Save Settings window appear automatically before you scan (in certain Epson Scan modes).

**Open image folder after scanning**
Select to have Windows Explorer or OS X Finder automatically open to the folder where your scanned image is saved after scanning.

**Show Add Page dialog after scanning**
If you are scanning a multi-page document using the PDF or Multi-TIFF format, select to display a prompt for scanning additional pages after the first page is scanned.

**Parent topic:** Selecting Scan File Settings

# Scanning with OS X Using Image Capture

With OS X 10.6/10.7/10.8/10.9, you can scan with your product using an image-editing application such as Image Capture.

**Note:** With OS X, in addition to scanning with Image Capture, you can download and install Epson Scan scanning software. Epson Scan provides additional image adjustment and photo correction features for enhancing scanned images, and provides an interface for TWAIN-compliant OCR scanning software. To download Epson Scan, visit Epson's driver download site (U.S. downloads or Canadian downloads).

1. Open an image editing application, such as Image Capture.
2. Select your Epson product from the **DEVICES** or **SHARED** list, if necessary. (You may need to hover over the **DEVICES** or **SHARED** list, click **Show**, and select your product.)
3. If you see the **Show Details** button, click it.

   If you are scanning an item on the scanner glass, your product begins a preview scan.

4. Select the **Scan Mode** setting indicating where you placed your original (if available). Select any other available scan settings as necessary.

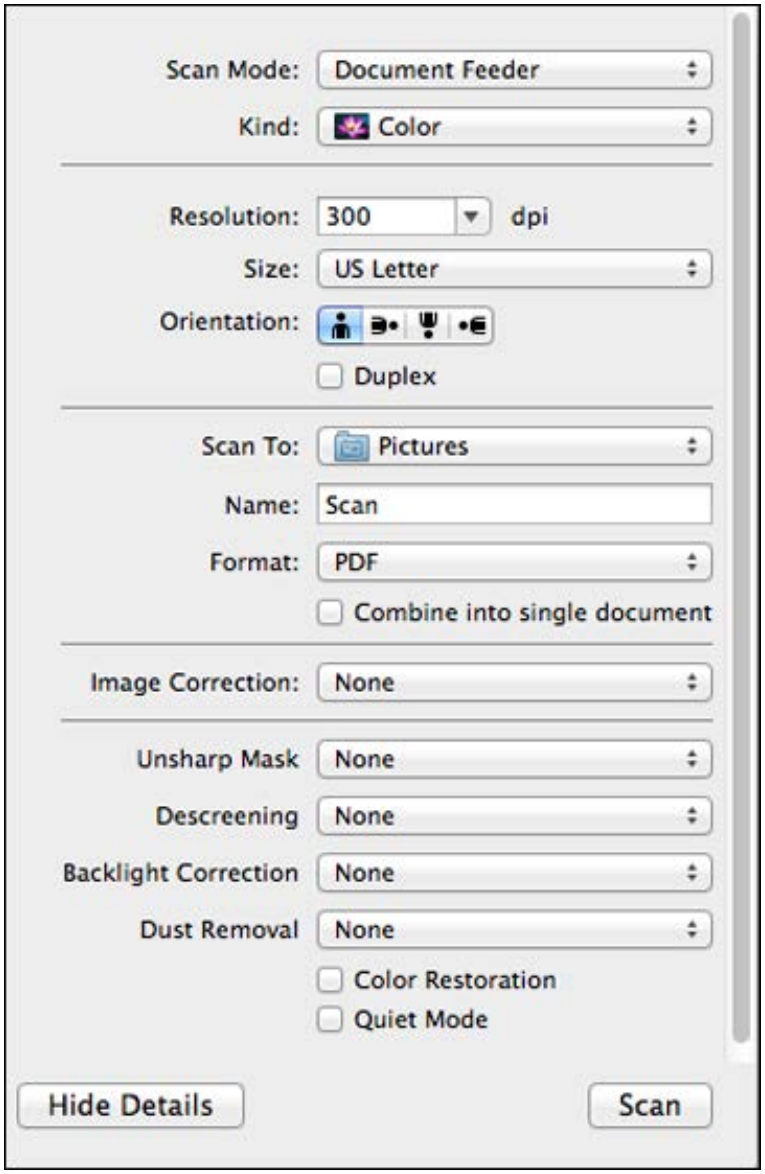

**Note:** If you are scanning a multi-page document in the ADF, you can have Image Capture combine all the pages into a single document. After all pages have been scanned, you see the message **No document loaded**.

5. Select the folder in which you want to save your scanned file in the **Scan To** pop-up menu.
6. Click **Scan**.

   Your scanned file is saved in the folder you selected.

Available Scan Settings - OS X Image Capture

**Parent topic:** Scanning

**Related topics**

Placing Originals on the Product

## Available Scan Settings - OS X Image Capture

You can select these scan settings in your imaging editing application for OS X, if available.

**Image Correction**
Provides a graphical interface for adjusting brightness, tint, temperature, and saturation.

**Unsharp Mask**
Makes the edges of certain image areas clearer. Turn off this option to leave softer edges.

**Descreening**
Removes the ripple pattern that might appear in subtly shaded image areas, such as skin tones. This option improves results when scanning magazines or newspapers. (The results of descreening do not appear in the preview image, only in your scanned image.)

**Backlight Correction**
Removes shadows from photos that have too much background light.

**Dust Removal**
Removes dust marks from your originals automatically.

**Color Restoration**
Restores the colors in faded photos automatically.

**Quiet Mode**
Reduces noise during scanning and may reduce scan speed.

**Parent topic:** Scanning with OS X Using Image Capture

# Scanning Special Projects

Your product's scanning software offers various options to help you quickly complete special scan projects.

Scanning to a SharePoint Server or Cloud Service

Scanning Multi-Page Originals as Separate Files

**Parent topic:** Scanning

## Scanning to a SharePoint Server or Cloud Service

You can use Document Capture Pro to upload scanned images to a SharePoint server or a cloud service.

1. Do one of the following to start Document Capture Pro:
   - **Windows 8.x**: Navigate to the **Apps** screen and select **Document Capture Pro**.
   - **Windows (other versions)**: Click or **Start**, and select **All Programs** or **Programs**. Select **EPSON Software**, then select **Document Capture Pro**.
   - **OS X**: Open the **Applications** folder, select the **Epson Software** folder, and select **Document Capture**. Select your product and click **OK**, if necessary.

   You see a window like this:

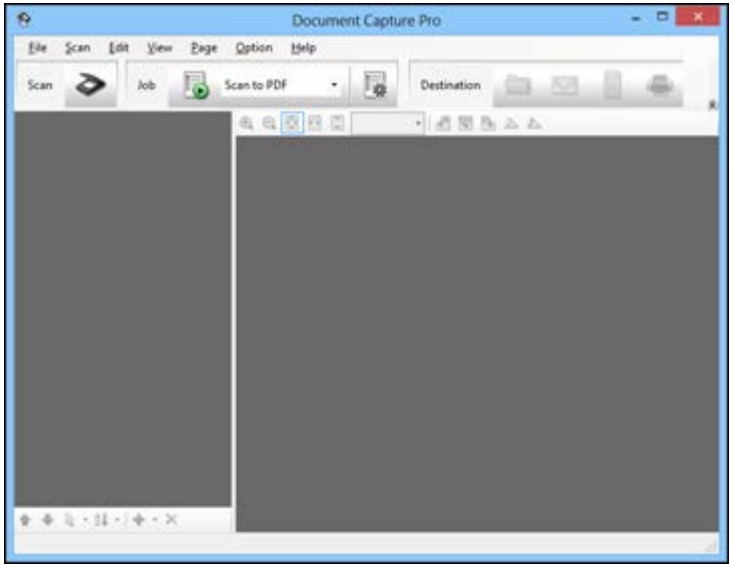

2. Click the **Scan** icon.
3. Select any displayed scan settings you want to use.

   **Note:** See the Help information in Document Capture Pro or Document Capture for details.

4. Click **Scan**.

   You see a preview of your scan in the Document Capture Pro or Document Capture window.
5. Click one of the cloud service Destination icons to choose where to save your scanned file.
   - Web Folder (WebDAV)
   - Evernote (Windows only)
   - Google Drive
   - SugarSync
   - Microsoft SharePoint server (Windows only)

   **Note:** You may need to click the arrow next to the icons in order to see all of them. The available icons may vary, depending on the software version you are using.

6. Select your Destination settings.

   **Note:** The settings may vary, depending on the software version you are using. See the Help information in Document Capture Pro or Document Capture for details.

7. Select any other scan settings as necessary, and click **Send**.

   Your originals are scanned and uploaded to the indicated server.

**Note:** You can also create a scan job for uploading scanned images to a SharePoint server or a cloud service. You can use the scan job when you scan with Document Capture Pro or Document Capture or when you scan using the Document Capture Pro option on the product control panel.

**Parent topic:** Scanning Special Projects

## Scanning Multi-Page Originals as Separate Files

You can use Document Capture Pro (Windows only) to scan multi-page originals as separate scanned files. You indicate where you want the new scanned files to start by inserting a blank page or barcode between the pages of your original.

**Note:** The settings may vary, depending on the software version you are using. See the Help information in Document Capture Pro for details.

1. Load a multi-page original with blank pages or barcodes inserted where you want to start a new scanned file.
2. Do one of the following to start Document Capture Pro:
   - **Windows 8.x**: Navigate to the **Apps** screen and select **Document Capture Pro**.
   - **Windows (other versions)**: Click or **Start**, and select **All Programs** or **Programs**. Select **EPSON Software**, then select **Document Capture Pro**.

   You see this window:

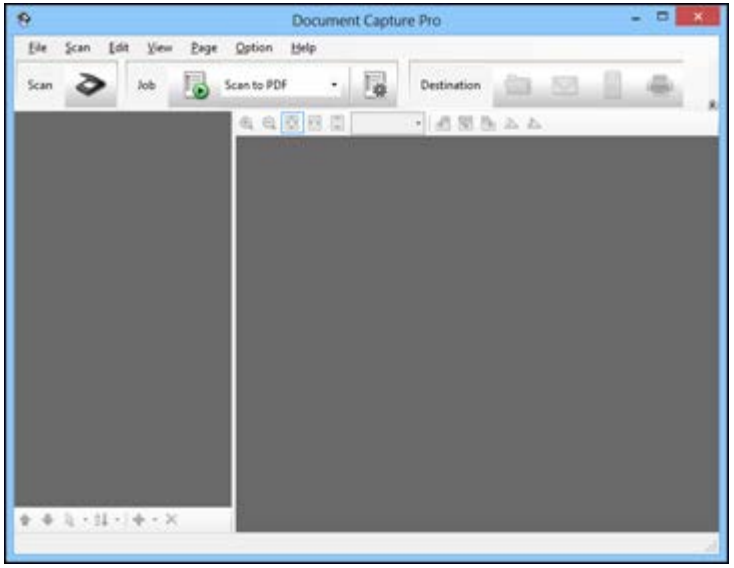


3. Click the **Scan** icon.

4. Select any displayed scan settings you want to use.

   **Note:** See the Help information in Document Capture Pro for details.

5. Click **Scan**.

   You see a preview of your scan in the Document Capture Pro window.

6. Open the **File** menu and select **Batch Save**.
7. Click **File Name Settings**.
8. Select **Apply Job Separation** and click **Separation Settings**.
9. Select the method you used to separate the originals, select a folder name specification and click **OK**.
10. Select any other settings from the File Name settings window as necessary and click **OK**.
11. Select any other settings from the Batch Save window as necessary and click **OK**.

    Your originals are saved into separate files as specified.

**Note:** You can also create a scan job for scanning multi-page originals as separate scanned files. You can use the scan job when you scan with Document Capture Pro or when you scan using the Document Capture Pro option on the product control panel.

**Parent topic:** Scanning Special Projects

# Entering a User ID and Password for Scanning - Windows

If Access Control is enabled on the product, a user ID and password may be required to scan. You can enter the user ID and password in Epson Scan Settings.

**Note:** If you do not know the user ID or password, contact your administrator for assistance.

1. Do one of the following to access Epson Scan Settings:
   - **Windows 8.x**: Navigate to the **Apps** screen and select **EPSON Scan Settings**.
   - **Windows (other versions)**: Click or **Start** > **All Programs** or **Programs** > **EPSON** > **EPSON Scan** > **EPSON Scan Settings**.
2. Click the **Access Control** button.
3. Enter your user name and password.

4. Click **OK**.

**Parent topic:** Scanning

# Faxing

See these sections to fax using your product.

**Note:** This product allows you to store names, telephone numbers, and fax data in its memory even when the power is turned off. Make sure you restore all of the default settings if you give away or dispose of the product. This will erase all of your network settings and fax data.

**Note:** When using the Epson Universal Print Driver or PostScript (PS3) printer software with the product, you can fax using the printer buttons or the utilities included with the standard Epson printer software. To download the standard Epson printer software, go to epson.com/support/wf8590.


Connecting a Telephone or Answering Machine
Setting Up Fax Features
Setting Up Contacts and Contact Groups
Sending Faxes
Receiving Faxes
Checking Fax Status
Printing Fax Reports


## Connecting a Telephone or Answering Machine

You must connect your product to a telephone wall jack to send or receive faxes. If you want to use the same telephone line to receive calls, you can connect a telephone or answering machine to your product using an additional phone cable.

**Note:** If you do not connect a telephone to your product, make sure Receive Mode is set to **Auto**. Otherwise, you cannot receive faxes.

1. Connect a phone cable to your telephone wall jack and to the **LINE** port on your product.

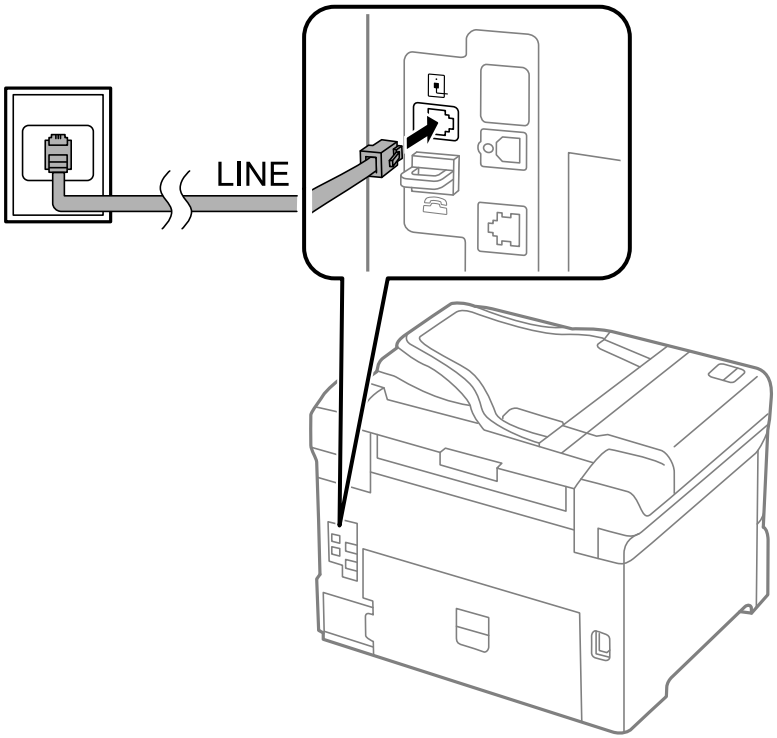


**Note:** If you have a DSL or ISDN connection, you must connect the appropriate DSL filter, or ISDN terminal adapter or router to the wall jack to be able to use the line for faxing or voice calls using your product. Contact your DSL or ISDN provider for the necessary equipment.

**DSL connection**

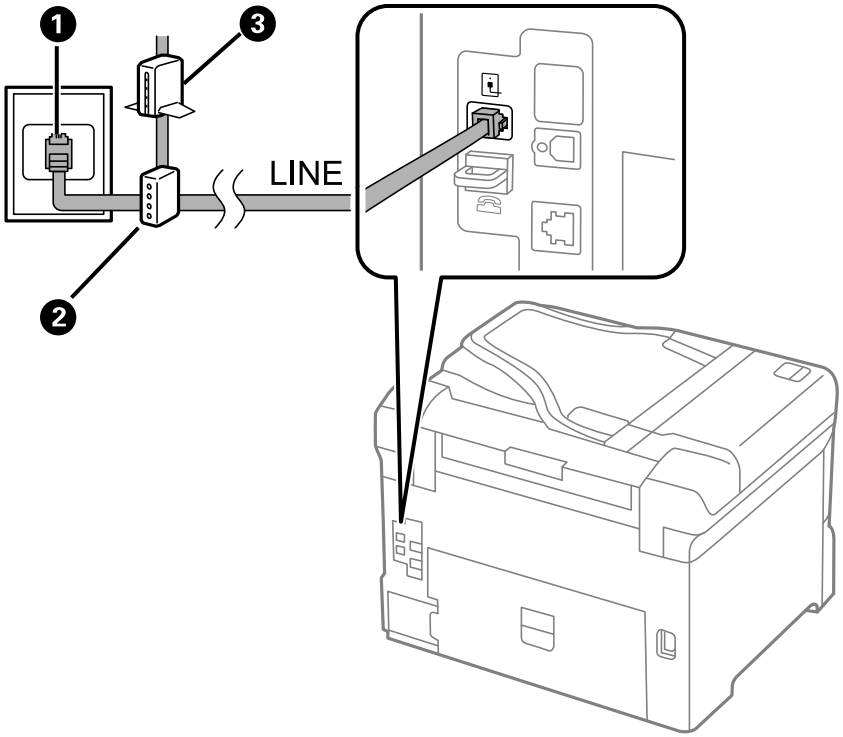


1 Telephone wall jack
2 DSL filter
3 DSL modem

**ISDN connection**

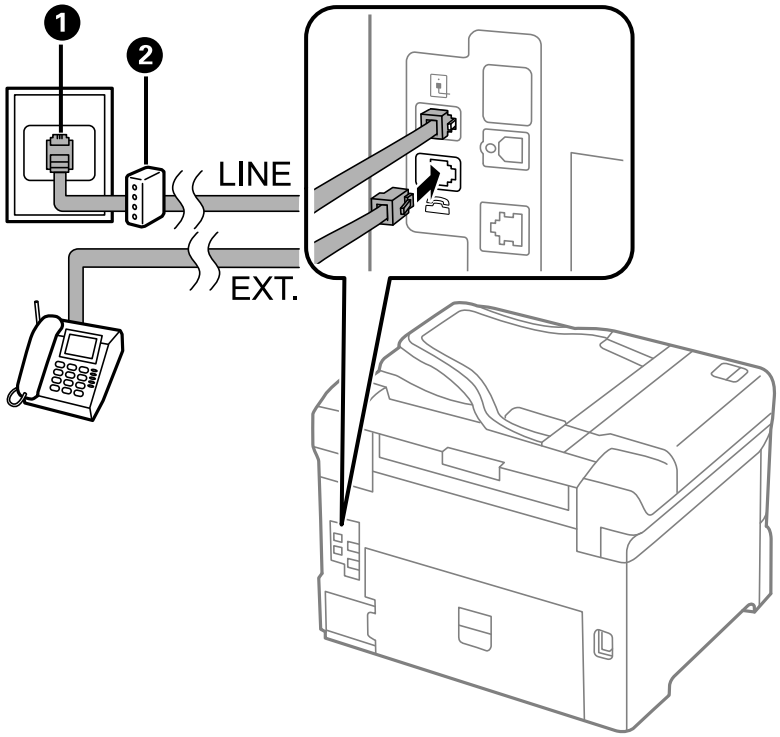


1 ISDN wall jack

2 Terminal adapter or ISDN router

2. If you are connecting a telephone or answering machine to your product using a second phone cable, remove the cap from the **EXT** port on your product.

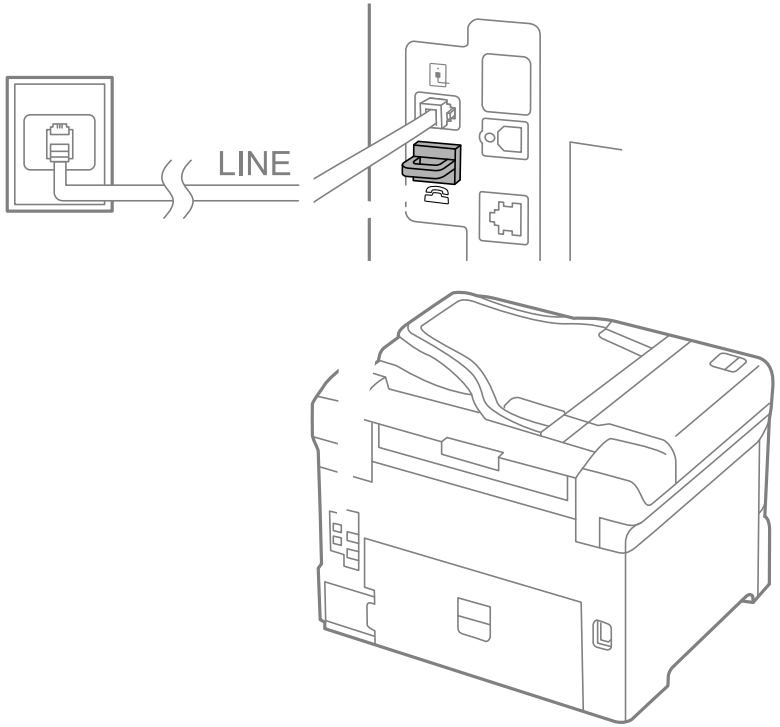

3. Connect a second phone cable to your telephone or answering machine and to the **EXT** port on your product.

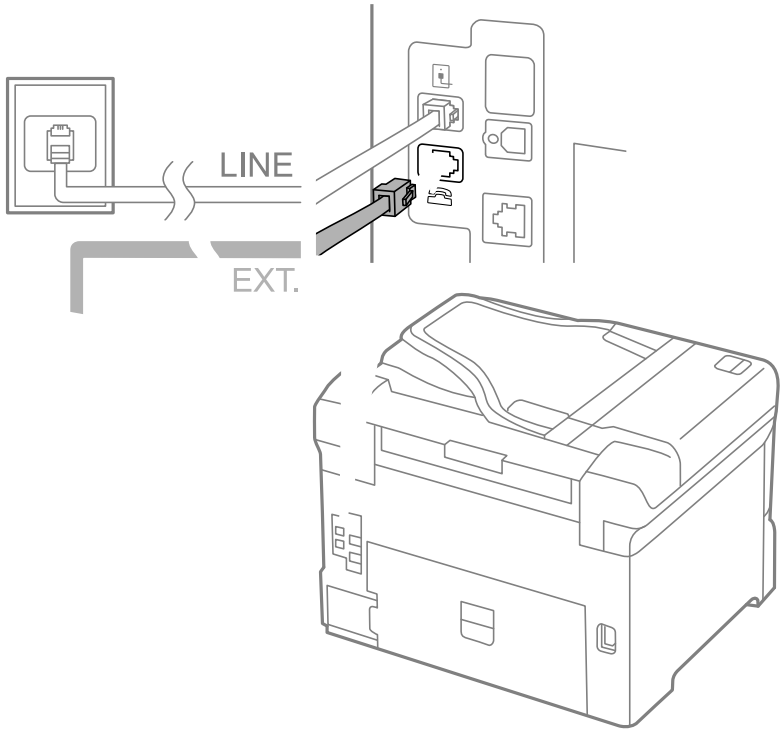


**Note:** If you connect an answering machine and Receive Mode is set to **Auto**, set the number of rings before your product answers a call to a number that is higher than your answering machine's setting for the number of rings.

Any phone or answering machine must be connected to the **EXT** port for your product to detect an incoming fax call when the phone is picked up. Epson cannot guarantee compatibility with VoIP, cable phone systems, or fiberoptic digital services such as FIOS.

**Parent topic:** Faxing

**Related tasks**

Receiving Faxes Automatically

# Setting Up Fax Features

Before faxing with your product, set up your fax header and select the fax features you want to use.

**Note:** If you leave your product unplugged for a long period of time, you may need to reset the date and time settings for faxes.

Setting Up Basic Fax Features
Selecting Advanced Fax Settings
Setting Up Fax Features Using the Fax Utility - Windows
Setting Up Fax Features Using the Fax Utility - OS X

**Parent topic:** Faxing

## Setting Up Basic Fax Features

See these sections to select the basic settings you need to use the product's fax features.

Selecting Your Country or Region
Selecting the Date and Time
Using the Fax Setup Wizard
Selecting the Line Type
Setting the Number of Rings to Answer

**Parent topic:** Setting Up Fax Features

### Selecting Your Country or Region

Before faxing, select the country or region in which you are using your product.

**Note:** If you change the country or region, your fax settings return to their defaults and you must select them again. This setting can be locked by an administrator. If you cannot access or change this setting, contact your administrator for assistance.

1. Press the home button, if necessary.

2. Select **Setup**.

3. Scroll down and select **System Administration**. Enter the administrator password, if necessary.

4. Select **Common Settings**.
5. Scroll down and select **Country/Region**.
6. Scroll up or down, if necessary, and select your country or region.
   You see a confirmation screen.
7. If the setting is correct, select **Yes**. (If not, select **No** and retry.)

   **Note:** Changing the country or region restores the fax settings to the default settings.

**Parent topic:** Setting Up Basic Fax Features

### Selecting the Date and Time

Before faxing, select the current date, time, and daylight saving phase in your area, and choose your preferred date and time format.

**Note:** This setting can be locked by an administrator. If you cannot access or change this setting, contact your administrator for assistance.

1. Press the home button, if necessary.
2. Select **Setup**.

3. Scroll down and select **System Administration**. Enter the administrator password, if necessary.

4. Select **Common Settings**.

5. Select **Date/Time Settings**.

   You see a screen like this:

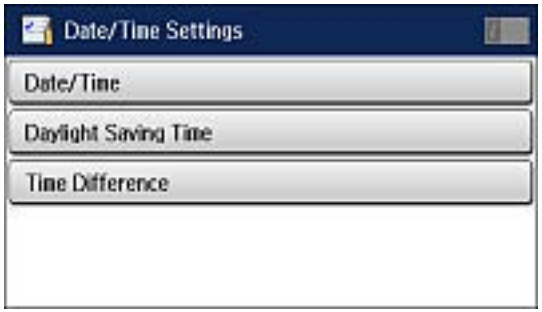


6. Select **Daylight Saving Time**.
7. Select the setting that applies to your area:
   - **Winter**: it is winter or your region does not use Daylight Saving Time (DST)
   - **Summer**: it is spring or summer and your region uses Daylight Saving Time (DST)

   **Note:** If your region uses Daylight Saving Time (DST), you must change this setting to match the season. When you change from **Winter** to **Summer**, your product automatically sets its clock ahead one hour. When you change from **Summer** to **Winter**, it sets its clock back one hour.

8. Select **Date/Time**.

9. Select the date format you want to use.
10. Use the numeric keypad to enter the current date.
11. Select the time format you want to use.
12. Use the numeric keypad to enter the current time.

**Parent topic:** Setting Up Basic Fax Features

### Using the Fax Setup Wizard

You can setup the product's basic fax settings using the Fax Setting Wizard. This wizard is automatically displayed when the product is turned on for the first time. You can also change these settings individually from the Fax Settings menu.

**Note:** These settings can be locked by an administrator. If you cannot access or change these setting, contact your administrator for assistance.

1. Press the home button, if necessary.
2. Select **Setup**.

3. Scroll down and select **System Administration**. Enter the administrator password, if necessary.

4. Scroll down and select **Fax Settings**.
5. Scroll down and select **Fax Setting Wizard**.

   The Fax Setting Wizard screen appears.
6. Select **Start**.
7. On the Fax Header screen, use the displayed keypad to enter the sender name for your fax source, such as your name or a business name. You can enter up to 40 characters.
8. On the Your Phone Number screen, use the displayed keypad to enter your fax number, up to 20 characters.

   **Note:** The name and phone number in the fax header identifies the source of the faxes you send.

9. On the Distinctive Ring Setting screen, do one of the following:
   - If you have subscribed to a distinctive ring service from your telephone company, select **Proceed**. Select the ring pattern to be used for incoming faxes or select **On**. Go to step 12.
   - If you do not have a distinctive ring service, select **Skip** and go to the next step.

   **Note:** Distinctive ring services allows you to have several phone numbers on one phone line. Each number is assigned a different ring pattern. You can use one number for voice calls and another for fax calls. Select the ring pattern assigned to fax calls in the DRD Setting. If you select **On** or a ring pattern other than **All**, Receive Mode is automatically set to **Auto**.

10. On the Receive Mode Setting screen, do one of the following:
    - If you have connected an external telephone or answering machine to the product, select **Yes** and go to the next step.
    - If you did not connect an external telephone or answering machine, select **No** and go to step 12. (Receive Mode is automatically set to **Auto**; otherwise you cannot receive faxes.)
11. On the next Receive Mode Setting screen, select **Yes** to receive faxes automatically or select **No** to receive faxes manually.

    **Note:** If you connect an external answering machine and select to receive faxes automatically, make sure the **Rings to Answer** setting is correct. If you select to receive faxes manually, you need to answer every call and operate the product's control panel or your phone to receive faxes.

12. On the Confirm Settings screen, confirm the displayed settings and select **Proceed**, or press back to change the settings.
13. On the Run Check Fax Connection screen, select **Start** and follow the on-screen instructions to check the fax connection and print a report of the check result. If there are any errors reported, try the solutions on the report and run the check again.

    **Note:**
    - If the Select Line Type screen appears, select the correct line type.
    - If the Select Dial Tone Detection screen appears, select **Disable**. However, disabling the dial tone detection function may drop the first digit of a fax number and send the fax to the wrong number.

**Parent topic:** Setting Up Basic Fax Features

**Related tasks**

Entering Characters on the LCD Screen

### Selecting the Line Type

If you connect the product to a PBX phone system or terminal adapter, you must change the product's line type. PBX (Private Branch Exchange) is used in office environments where an external access code such as “9” must be dialed to call an outside line. The default Line Type setting is PSTN (Public Switched Telephone Network), which is a standard home phone line.

**Note:** This setting can be locked by an administrator. If you can't access or change this setting, contact your administrator for assistance.

1. Press the home button, if necessary.
2. Select **Setup**.

3. Scroll down and select **System Administration**. Enter the administrator password, if necessary.

4. Scroll down and select **Fax Settings**.
5. Select **Basic Settings**.
6. Select **Line Type**.
7. Select **PBX**.

You see a screen like this:

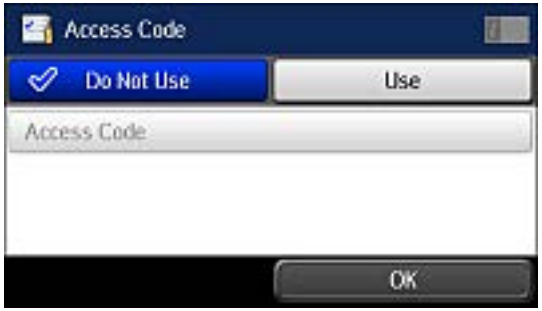


8. Select **Use**.
9. Select **Access Code**.
10. Use the displayed keypad to enter the access code, such as 9, and select **OK**.

**Parent topic:** Setting Up Basic Fax Features

### Setting the Number of Rings to Answer

If you connect an external answering machine and select to receive faxes automatically, make sure the Rings to Answer setting is correct. The number of rings should be higher than the number of rings your answering machine is set to for answering a call.

**Note:** This setting can be locked by an administrator. If you cannot access or change this setting, contact your administrator for assistance.

1. Press the home button, if necessary.

2. Select **Setup**.

3. Scroll down and select **System Administration**. Enter the administrator password, if necessary.

4. Scroll down and select **Fax Settings**.
5. Select **Receive Settings**.

6. Select **Rings to Answer**.

7. Select the number of rings and select **OK**. Make sure to select a number higher than the number of rings your answering machine is set to for answering a call.

**Note:** An answering machine picks up every call faster than the product, but the product can detect fax tones and start receiving faxes. If you answer the phone and hear a fax tone, check that the product has started receiving the fax, then hang up the phone.

**Parent topic:** Setting Up Basic Fax Features

## Selecting Advanced Fax Settings

You can select a variety of advanced fax settings.

**Note:** These settings can be locked by an administrator. If you cannot access or change these setting, contact your administrator for assistance.

1. Press the home button, if necessary.

2. Select **Setup**.

3. Scroll down and select **System Administration**. Enter the administrator password, if necessary.

4. Scroll down and select **Fax Settings**.
   You see a screen like this:

5. Select the group of settings you want to change.

User Default Settings - Fax
Send Settings - Fax
Receive Settings - Fax
Output Settings - Fax
Basic Settings - Fax
Security Settings - Fax

**Parent topic:** Setting Up Fax Features

### User Default Settings - Fax

Set the default settings you want to use for faxing.

| Setting | Options | Description |
|---|---|---|
| **Resolution** | **Standard** | Adjusts the scan resolution and print quality of outgoing faxes. |
| | **Fine** | |
| | **Super Fine** | |
| | **Ultra Fine** | |
| | **Photo** | |
| **Density** | **Auto** | Automatically adjusts the darkness of outgoing faxes. Select this option when sending black-and-white text documents. |
| | **Manual** | Lets you select from various density levels. |
| **Document Size (Glass)** | **Half Letter** | Sets the size for a document placed on the scanner glass. |
| | **A5** | |
| | **Letter** | |
| | **Legal** | |
| | **A4** | |
| | **11x17in** | |
| | **A3** | |

| Setting | Options | Description |
|---|---|---|
| **ADF 2-Sided** | **Off** | Select **On** to enable 2-sided faxing from the ADF. The Direct Send option and color faxing are disabled when you turn on this setting. |
| | **On** | |
| **Direct Send** | **Off** | Select **On** to send black-and-white faxes to a single recipient as soon as the connection is made, without saving the scanned image to memory. You cannot use this setting when sending a color fax or sending a fax to multiple recipients. |
| | **On** | |
| **Continuous Scan from ADF** | **Off** | Select **On** to have the product to ask if you want to scan another page after a document in the ADF has finished scanning. |
| | **On** | |
| **Transmission Report** | **Print on Error** | Lets you select when to print transmission reports. |
| | **Print** | |
| | **Do Not Print** | |

**Parent topic:** Selecting Advanced Fax Settings

### Send Settings - Fax

Set the send options you want to use for outgoing faxes.

| Setting | Options | Description |
|---|---|---|
| **Auto Rotation** | **Off** | Sends an A4 or letter-size document that is placed long edge first into the ADF as an A3-size fax. |
| | **On** | |
| **Batch Send** | **Off** | Sorts outgoing faxes by recipient in the product's memory, and then sends them as a batch. |
| | **On** | |
| **Save Failure Data** | **Off** | Saves faxes that failed to be sent in the product's memory. You can resend the faxes from the product's Status Menu. |
| | **On** | |

**Parent topic:** Selecting Advanced Fax Settings

### Receive Settings - Fax

Set the receive options you want to use for incoming faxes.

| Setting | Options | Description |
|---|---|---|
| **Receive Mode** | **Manual** | Lets you confirm whether an incoming fax should be printed; a telephone must be connected to the product |
| | **Auto** | Automatically receives and prints faxes. |
| **Distinctive Ring** | **All** | If you are using a Distinctive Ring Service on your phone line, your telephone company can assign two or more phone numbers to the same line and assign different ring patterns to each. If you use this service, select the number of rings for your fax number so your product can receive faxes on the correct number of rings. Select **All** for phones lines that do not use this service. |
| | **Single** | |
| | **Double** | |
| | **Triple** | |
| | **Double&Triple** | |
| **Rings to Answer** | 1 to 9 | Sets the number of rings before your product receives a fax. If Receive Mode is set to **Auto** and an answering machine is connected to the product, make sure this setting is set higher than the number of rings your answering machine is set to answer a call. |
| **Remote Receive** | **Off** | Lets you start receiving faxes using your phone instead of operating the product (if the Receive Mode is set to **Auto**). When you select **On**, you must also set a **Start Code**. If you are using a cordless handset with its base connected to the product, you can start receiving the fax by entering the code using the handset. |
| | **On** | |
| | **Start Code** | |

**Parent topic:** Selecting Advanced Fax Settings

### Output Settings - Fax

Set the output options you want to use for incoming faxes.

**Note:** If you select **Save to Inbox**, faxes are saved in the product's memory. Delete faxes after viewing or printing them to prevent the memory from filling up. Even if you select other options for saving faxes, they may be saved temporarily in the product's memory.

| Setting | Options | Description |
|---|---|---|
| **Fax Output** | **Other Settings** | Lets you create a folder for saving faxes on a memory device and select settings for forwarding faxes. |
| | **Save to Inbox** | Saves incoming faxes in the product's memory. You can view the faxes on the LCD screen and print if needed. |
| | **Save to Computer** | To use this option, you must use the Epson FAX Utility. Select **Yes and Print** to have faxes saved to your computer and printed automatically. |
| | **Save to Memory Device** | Saves incoming faxes to a connected memory device or USB storage device. Select **Yes and Print** to have faxes saved to the memory device and printed automatically. |
| | **Forward** | Forwards incoming faxes to as many as 5 numbers in your contact list. Select **Yes and Print** to have faxes forwarded and printed automatically. Color faxes cannot be forwarded. |
| **Auto Reduction** | **On** | Select to reduce the size of large received faxes to fit on the paper size in the selected paper source. |
| | **Off** | Select to print large incoming faxes at their original size on multiple sheets, if necessary. |
| **Auto Rotation** | **On** | If you have loaded A5-size paper, select **On** to rotate landscape-oriented incoming faxes so that they print correctly on the paper. |
| | **Off** | |
| **Collation Stack** | **On** | Select **On** to print incoming faxes so that the pages are stacked in the correct page order. (When the product is low on memory, this option may not be available.) |
| | **Off** | |
| **Print Suspend Time** | **Off** | Select **On** to set a time period to stop automatic printing of faxes or reports and save received faxes in the product’s memory. (Make sure there is enough free memory before using this function.) |
| | **On** | |
| | **Time to Stop** | |
| | **Restart Time** | |

| Setting | Options | Description |
|---|---|---|
| **Forwarding Report** | **Print on Error** | Selects whether or when to print a report after an incoming fax is forwarded. |
| | **Print** | |
| | **Do Not Print** | |
| **Attach Image to Report** | **Off** | Does not include an image of the fax on transmission reports. |
| | **On(Small Image)** | Prints transmission reports with an image of the first faxed page. (Does not work when you select **Direct Send**.) |
| | **On(Large Image)** | |
| **Fax Log Auto Print** | **Off** | Does not print the fax log. |
| | **On(Every 30)** | Prints the fax log after 30 faxes are sent or received. |
| | **On(Time)** | Prints the fax log at a time you select using the numeric keypad displayed on the LCD screen. |
| **Report Format** | **Simple** | Selects the amount of information on fax reports. |
| | **Detail** | |

**Parent topic:** Selecting Advanced Fax Settings

### Basic Settings - Fax

Set the basic options you want to use for incoming and outgoing faxes.

| Setting | Options | Description |
|---|---|---|
| **Fax Speed** | **Fast(33,600bps)** | Sets the speed at which you send and receive faxes. |
| | **Medium(14,400bps)** | |
| | **Slow(9,600bps)** | |
| **ECM** | **On** | Turns on Error Correction Mode (ECM) to automatically correct errors in sent or received fax data. |
| | **Off** | Turns off Error Correction Mode (ECM); color faxes cannot be sent or received. |

| Setting | Options | Description |
|---|---|---|
| **Dial Tone Detection** | **On** | Automatically dials the number you enter for faxing when the product detects a dial tone. |
| | **Off** | Turns off automatic dial tone detection, which may be necessary if the product is connected to a PBX (Private Branch Exchange) or a TA (Terminal Adapter). However, turning this setting off may cause the product to drop the first digit of a fax number. |
| **Line Type** | **PSTN** | Selects a standard phone line (Public Switched Telephone Network). |
| | **PBX** | Selects Private Branch Exchange, the type of phone line used in office environments where an access code such as 9 must be used to call an outside line. |
| **Header** | **Fax Header** | Select to enter the header information and your phone number for inclusion on outgoing faxes. |
| | **Your Phone Number** | |

**Parent topic:** Selecting Advanced Fax Settings

### Security Settings - Fax

Set the security options you want to use for fax data.

| Setting | Options | Description |
|---|---|---|
| **Direct Dialing Restrictions** | **Off** | Does not restrict dialed fax numbers. |
| | **On** | Allows faxing only to numbers stored in the contacts list or history. |
| | **Enter Twice** | Requires you to enter fax numbers twice to prevent errors. |
| **Confirm Address List** | **Off** | Selects whether or not to display a recipient confirmation screen before a fax is sent. |
| | **On** | |
| **Inbox Password Settings** | **Register** | Select to set a password for viewing incoming faxes. |

| Setting | Options | Description |
|---|---|---|
| **Backup Data Auto Clear** | **Off** | Automatically erases sent or received fax data from your product's memory. |
| | **On** | |
| **Clear Backup Data** | — | Deletes all sent or received fax data remaining in your product's memory; run this function if you are giving away or disposing of your product. |

**Parent topic:** Selecting Advanced Fax Settings

## Setting Up Fax Features Using the Fax Utility - Windows

You can set up your fax header and select your fax settings using the FAX Utility for Windows.

1. Do one of the following:
   - **Windows 8.x**: Navigate to the **Apps** screen.
   - **Windows (other versions)**: Click or **Start** > **Programs** or **All Programs** > **EPSON Software**.
2. Select **FAX Utility**.

   You see this window:

3. Select **Fax Settings for Printer**. (Select your product, if prompted.)

   You see this window:

4. Select **Fax Settings**.
5. Follow the prompts that appear on the screen to enter your fax header information and select your fax settings.

   **Note:** For detailed information, select the FAX Utility **Help** option.

**Parent topic:** Setting Up Fax Features

## Setting Up Fax Features Using the Fax Utility - OS X

You can set up your fax header and select your fax settings using the FAX Utility for OS X.

1. Do one of the following:
   - **OS X 10.6/10.7/10.8/10.9**: In the Apple menu or the Dock, select **System Preferences**. Select **Print & Fax**, **Print & Scan**, or **Printers & Scanners**, select your product, and select **Options & Supplies**. Select **Utility** and select **Open Printer Utility**.

- **OS X 10.5**: In the Apple menu or the Dock, select **System Preferences**. Select **Print & Fax**, select your product, and select **Open Print Queue**. Select **Utility**.

2. Double-click **FAX Utility**, if necessary.

   You see this window:

3. Select your **FAX** product in the Printer list.
4. Select **Fax Settings**.
5. Follow the prompts that appear on the screen to enter your fax header information and select your fax settings.

   **Note:** For detailed information, select the FAX Utility **?** icon.

**Parent topic:** Setting Up Fax Features

## Setting Up Contacts and Contact Groups

You can set up a list of contacts and their fax numbers so you can quickly select them for faxing. You can also set up contact groups to send a fax message to multiple contacts.

Setting Up Contacts Using the Product Control Panel
Setting Up Speed/Group Dial Lists Using the Fax Utility - Windows
Setting Up Speed/Group Dial Lists Using the Fax Utility - OS X

**Parent topic:** Faxing

# Setting Up Contacts Using the Product Control Panel

You can set up your contacts and contact groups using the control panel on your product.

**Note:** Contacts can be locked by an administrator. If you cannot access or change contacts, contact your administrator for assistance.

Creating a Contact
Editing or Deleting a Contact
Creating a Contact Group
Editing or Deleting a Contact Group

**Parent topic:** Setting Up Contacts and Contact Groups

**Related tasks**

Setting Up Speed/Group Dial Lists Using the Fax Utility - Windows
Setting Up Speed/Group Dial Lists Using the Fax Utility - OS X

## Creating a Contact

You can create a list of contacts to save frequently used fax numbers.

**Note:** You can create up to 100 contacts and contact groups combined.

1. Press the home button, if necessary.
2. Select **Fax**.

   You see a screen like this:

3. Select **Contacts**. Enter the administrator password, if necessary.

You see a screen like this:

4. Select **Menu**.
   You see a screen like this:

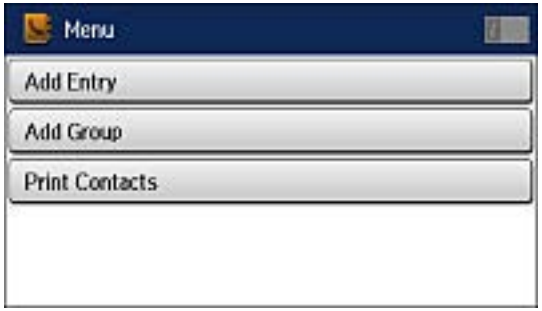


   **Note:** You can print your list of contacts and groups if necessary.

5. Select **Add Entry**.
6. Select the number you want to use for the contact you are adding.

You see a screen like this:

7. Select the **Name** field, use the displayed keyboard to enter the contact name (up to 30 characters), and press .
8. Select the **Index Word** field, use the displayed keyboard to enter a word to use when searching for an entry (up to 30 characters), and press . (This field is optional.)
9. Select the **Fax Number** field, and use the numeric keypad on the LCD screen or the buttons on the product to enter the fax number. You can enter up to 64 characters.

   **Note:** If necessary, enter an outside line access code (such as **9**) at the beginning of the fax number. If the access code has been set up in the **Line Type** setting, enter the # pound sign instead of the code.

10. Set the **Fax Speed**, if necessary.
11. Select **Save**.

**Parent topic:** Setting Up Contacts Using the Product Control Panel

### Editing or Deleting a Contact

You can edit or delete any of the contacts on your list.

1. Press the home button, if necessary.
2. Select **Fax**.

You see a screen like this:

3. Select **Contacts**. Enter the administrator password, if necessary.
4. Select the contact you want to edit or delete.

   You see a screen like this:

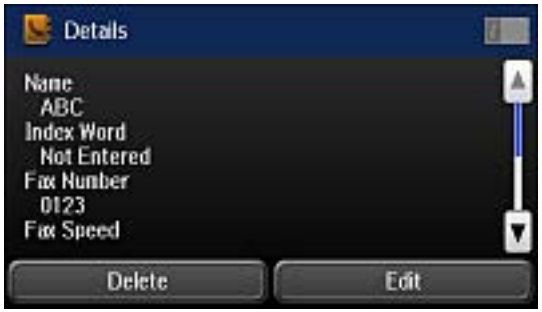


5. Do one of the following:
   - To delete the contact, select **Delete** and select **Yes** on the confirmation screen.
   - To edit the contact, select **Edit**, select the item you want to change, enter the correct information, and select . When you are finished editing, select **Save**.

**Parent topic:** Setting Up Contacts Using the Product Control Panel

## Creating a Contact Group

You can create a group of contacts so that you can easily send faxes to multiple recipients.

**Note:** You can create up to 100 contacts and contact groups combined.

1. Press the home button, if necessary.
2. Select **Fax**.

   You see a screen like this:

3. Select **Contacts**. Enter the administrator password, if necessary.
4. Select **Menu**.

   You see a screen like this:

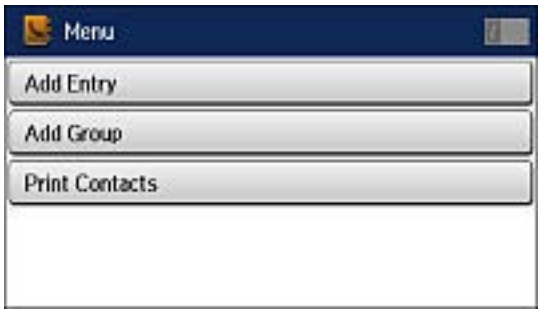


   **Note:** You can print your list of contacts and groups if necessary.

5. Select **Add Group**.
6. Select the number you want to use for the group you are adding.

You see a screen like this:

7. Select the **Name** field, use the displayed keyboard to enter the group name (up to 30 characters) and press ↵.
8. Select the **Index Word** field, use the displayed keyboard to enter a word to use when searching for a group (up to 30 characters) and press ↵. (This field is optional.)
9. Select **Proceed**.

   You see your contacts list.
10. Select the number next to each contact you want to include in your group.

    A check mark appears next to each selected contact.
11. Select **Save**.

**Parent topic:** Setting Up Contacts Using the Product Control Panel

### Editing or Deleting a Contact Group

You can edit an existing contact group to add or delete entries. You can also delete the entire contact group.

1. Press the ⌂ home button, if necessary.
2. Select **Fax**.

You see a screen like this:

3. Select **Contacts**. Enter the administrator password, if necessary.
   You see a screen like this, showing both individual contacts and contact groups:

4. Select the group you want to edit.

You see a screen like this:

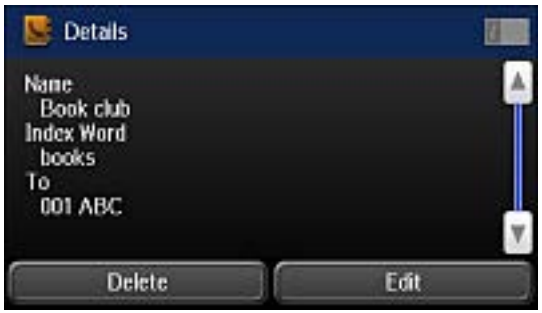


**Note:** If you want to delete the entire group, select **Delete**.

5. To edit the group, select **Edit**.
6. Select **Proceed**.

   You see a list of the contacts in your group.
7. To add or delete a contact, select the number next to it.
8. Select **Save**.

**Parent topic:** Setting Up Contacts Using the Product Control Panel

## Setting Up Speed/Group Dial Lists Using the Fax Utility - Windows

You can set up your speed dial and group dial lists using the FAX Utility for Windows. The utility also lets you import fax numbers from the Windows Address Book and back up fax numbers stored in your product's memory.

**Note:** You can create up to 60 speed dial and group dial entries combined.

1. Do one of the following:
   - **Windows 8.x**: Navigate to the **Apps** screen.
   - **Windows (other versions)**: Click or **Start** > **Programs** or **All Programs** > **EPSON Software**.
2. Select **FAX Utility**.

You see this window:

3. Select **Fax Settings for Printer**. (Select your product, if prompted.)

You see this window:

4. Select **Speed Dial/Group Dial List**.

You see this window:

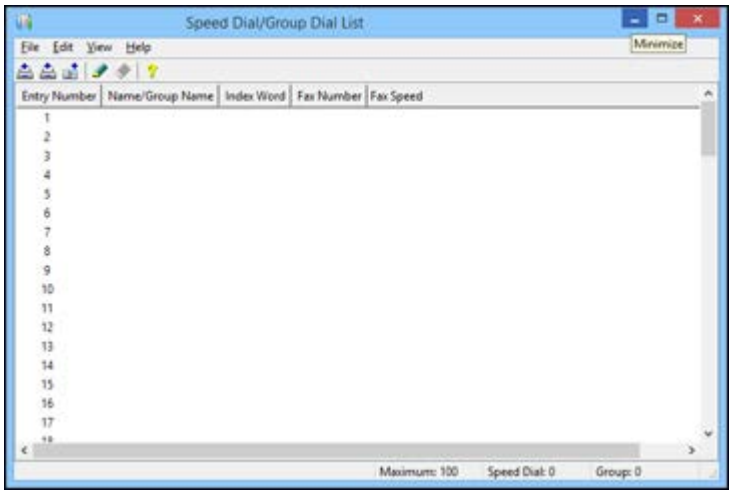


5. Select an empty entry and click the icon.

   **Note:** To edit an entry, select it and click the icon. To delete an entry, select it and click the icon.

6. Do one of the following:
   - To create a speed dial entry, select **Speed Dial**, enter a name and fax number, and click **OK**.
   - To create a group dial entry, select **Group**, enter a name, select your desired fax numbers, and click **OK**.
7. Repeat the previous steps as necessary to add all your speed dial or group dial entries.
8. When you are finished, click the icon to save the entries to your product's memory.

**Parent topic:** Setting Up Contacts and Contact Groups

**Related topics**

Setting Up Contacts Using the Product Control Panel

## Setting Up Speed/Group Dial Lists Using the Fax Utility - OS X

You can set up your speed dial and group dial lists using the FAX Utility. The utility also lets you import fax numbers from the MacAddress Book and back up fax numbers to your product's memory.

**Note:** You can create up to 60 speed dial and group dial entries combined.

1. Do one of the following:
   - **OS X 10.6/10.7/10.8/10.9**: In the Apple menu or the Dock, select **System Preferences**. Select **Print & Fax**, **Print & Scan**, or **Printers & Scanners**, select your product, and select **Options & Supplies**. Select **Utility** and select **Open Printer Utility**.
   - **OS X 10.5**: In the Apple menu or the Dock, select **System Preferences**. Select **Print & Fax**, select your product, and select **Open Print Queue**. Select **Utility**.
2. Double-click **FAX Utility**, if necessary.

   You see this window:

3. Select your **FAX** product in the Printer list.
4. Select **Speed Dial/Group Dial List**.

You see this window:

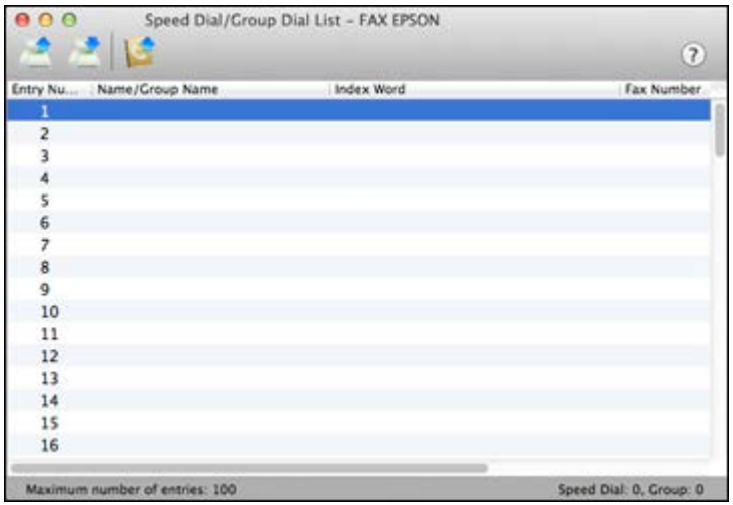


5. To add an entry, double-click an empty entry.

   **Note:** To edit an entry, select it and change the information. To delete an entry, select it and press the **Delete** key on your keyboard.

6. Do one of the following:
   - To create a speed dial entry, select **Speed Dial**, enter a name and fax number, and click **OK**.
   - To create a group dial entry, select **Group Dial**, enter a name, select your desired fax numbers, and click **OK**.
7. Repeat the previous steps as necessary to add all your speed dial or group dial entries.
8. To import entries from your MacAddress book, click the icon.
9. When you are finished, click the icon to save the entries to your product's memory.

**Parent topic:** Setting Up Contacts and Contact Groups

**Related topics**

Setting Up Contacts Using the Product Control Panel

# Sending Faxes

See these sections to send faxes using your product.

Sending Faxes from the Product Control Panel
Sending Faxes Using the Fax Utility - Windows
Sending Faxes Using the Fax Utility - OS X

**Parent topic:** Faxing

## Sending Faxes from the Product Control Panel

See these sections to send faxes using the product's control panel.

Sending a Fax Using the Keypad, Contact List, or History
Fax Sending Options
Sending a Fax at a Specified Time
Sending a Fax on Demand
Sending a Stored Fax
Dialing Fax Numbers from a Connected Telephone

**Parent topic:** Sending Faxes

### Sending a Fax Using the Keypad, Contact List, or History

You can send a fax from your product control panel by entering the fax number, or selecting the number from either the contact list or fax history.

**Note:** You can send a black-and-white fax to up to 200 recipients at a time, or send a color fax to one recipient at a time. If your recipient's fax machine does not print in color, your fax is automatically sent in black-and-white.

**Note:** The product can queue up to 50 black-and-white fax jobs. You can check or cancel fax jobs in the queue using the Status Menu.

1. Place your original on the product for faxing.
2. Press the ⌂ home button, if necessary.

3. Select **Fax**.

**Note:** To fax a double-sided document, place your document in the ADF and turn on the **ADF 2-Sided** setting. (You cannot fax double-sided documents in color.)

4. Do one of the following to select fax recipients:
   - **Manually enter a fax number**: Press the **Enter a Fax Number** field and enter a fax number. Press when done. To add another fax number, repeat the same steps. You can also use the numeric keypad on the control panel to enter a fax number.

     **Note:** If direct dialing has been restricted, you can only select the number from the contact list or fax history. If necessary, enter an outside line access code (such as 9) at the beginning of the fax number. If the access code has been set up in the **Line Type** setting, enter the # pound sign instead of the code.

   - **Select from the contact list**: Select **Contacts** to display the contact list screen. Select the checkbox next to one or more contact (select the checkbox again to deselect it). You can also select the **Search** field to search for recipients by name, index name, or entry number. Select **Proceed** when you are finished.
   - **Select from the sent fax history**: Select **History** to display the sent fax history. Select a recipient from the list, select **Menu**, and select **Send to this number**.

   **Note:** To delete entered recipients, select the **Enter a Fax Number** field, select the recipient you want to delete, and select **Delete from the List**.

5. If you need to change any fax settings, select **Menu**, select **Fax Send Settings**, and select your settings.

6. If you want to preview your fax in black-and-white on the LCD, select **Preview**. (If the preview looks incorrect, select **Retry**, reposition the document or change the fax settings, and repeat this step.)

   **Note:** If you do not touch the preview screen for 20 seconds, your product sends the fax automatically. You cannot preview images when the Direct Send setting is turned on.

7. If you want to save your fax settings for later use, select **Presets** and add a new entry.
8. Press one of the ◇ buttons.

   **Note:** To cancel faxing, press the ⊽ **Stop** button. You can also cancel the job or check the job status from the Status Menu.

   Your product scans your original and prompts you to place additional pages, if necessary.

After scanning your originals, your product dials the number and sends the fax.

**Note:** Your product does not save sent color faxes to its memory. If the **Save Failure Data** option is enabled, faxes that failed to be sent are stored to the product's memory and you can resend them from the Status Menu screen.

**Parent topic:** Sending Faxes from the Product Control Panel

**Related references**

Fax Sending Options

**Related tasks**

Using Presets

Selecting the Line Type

**Related topics**

Placing Originals on the Product

Setting Up Contacts and Contact Groups

## Fax Sending Options

While sending a fax, you can select **Menu** and select these options from the Fax Send Settings menu.

**Note:** You can also select these options in the User Default Settings menu.

| Setting | Options | Description |
|---|---|---|
| **Resolution** | **Standard** | Adjusts the scan resolution and print quality of outgoing faxes. |
| | **Fine** | |
| | **Super Fine** | |
| | **Ultra Fine** | |
| | **Photo** | |
| **Density** | **Auto** | Automatically adjusts the darkness of outgoing faxes. Select this option when sending black-and-white text documents. |
| | **Manual** | Lets you select from various density levels. |
| **Document Size (Glass)** | **Half Letter** | Sets the size for a document placed on the scanner glass. |
| | **A5** | |
| | **Letter** | |
| | **Legal** | |
| | **A4** | |
| | **11x17in** | |
| | **A3** | |
| **ADF 2-Sided** | **Off** | Select **On** to enable 2-sided faxing from the ADF. The Direct Send option and color faxing are disabled when you turn on this setting. |
| | **On** | |
| **Direct Send** | **Off** | Select **On** to send black-and-white faxes to a single recipient as soon as the connection is made, without saving the scanned image to memory. You cannot use this setting when sending a color fax or sending a fax to multiple recipients. |
| | **On** | |
| **Priority Send** | **Off** | Select **On** to send the current fax before other faxes waiting to be sent. |
| | **On** | |
| **Continuous Scan from ADF** | **Off** | Select **On** to have the product to ask if you want to scan another page after a document in the ADF has finished scanning. |
| | **On** | |

| Setting | Options | Description |
|---|---|---|
| **Transmission Report** | **Print on Error** | Lets you select when to print transmission reports. |
| | **Print** | |
| | **Do Not Print** | |

**Parent topic:** Sending Faxes from the Product Control Panel

### Sending a Fax at a Specified Time

You can send a fax at a time of your choice.

**Note:** Make sure the product's date and time settings are correct. You can only send faxes in black-and-white when you use this option.

1. Place your original on the product for faxing.
2. Press the home button, if necessary.
3. Select **Fax**.

**Note:** To fax a double-sided document, place your document in the ADF and turn on the **ADF 2-Sided** setting.

4. Enter a fax number or select a number from the Contacts list or History.
5. Select **Menu**.
6. Select **Send Fax Later**.
7. Select **On**.

8. Select **Time**, use the displayed keypad on the LCD screen to enter your desired time, and select **OK**.
9. Press one of the ◇ buttons.

   **Note:** To cancel faxing, press the ⊽ **Stop** button.

After scanning your originals, your product dials the number and sends the fax at the specified time.

**Note:** If the product is turned off at the specified time, the fax is sent when it is powered on.

**Parent topic:** Sending Faxes from the Product Control Panel

**Related references**

Fax Sending Options

**Related tasks**

Selecting the Date and Time

**Related topics**

Placing Originals on the Product

Setting Up Contacts and Contact Groups

## Sending a Fax on Demand

You can store one scanned document (up to 100 black-and-white pages) and have it sent automatically when another fax machine requests it. Other fax users can receive the document by calling your fax number and using the polling receive function on their fax machines.

1. Place your original on the product for faxing.
2. Press the ⌂ home button, if necessary.

3. Select **Fax**.

4. Select **Menu**.
5. Select **Polling Send** and select **On**.
6. If you need to change any fax settings, select **Menu**, select **Fax Send Settings**, and select your settings.
7. Press the ◈ **B&W** button.

   Your document is scanned and stored until you overwrite or delete it.

You can store only one document at a time. Subsequent documents overwrite the existing document. You can also delete a stored document from the Status Menu.

**Parent topic:** Sending Faxes from the Product Control Panel

**Related references**

Fax Sending Options

**Related topics**

Placing Originals on the Product

## Sending a Stored Fax

You can store one black-and-white scanned document (up to 100 pages) and send it whenever necessary.

1. Place your original on the product for faxing.
2. Press the ⌂ home button, if necessary.

3. Select **Fax**.

4. Select **Menu**.
5. Select **Store Fax Data** and select **On**.
6. If you need to change any fax settings, select **Menu**, select **Fax Send Settings**, and select your settings.
7. Press the ◇ **B&W** button.

   Your document is scanned, stored, and briefly previewed.
8. When you are ready to send the document, press the **i Status** button.

   You see a screen like this:

9. Select **Job Monitor**.
10. Select **Communication Job**.
11. Select the stored fax job you want to send.

12. Select **Send/View** and select **Send**.

You can store only one document at a time. Subsequent documents overwrite the existing document. You can also delete a stored document from the Status Menu.

**Parent topic:** Sending Faxes from the Product Control Panel

**Related references**

Fax Sending Options

**Related topics**

Placing Originals on the Product

### Dialing Fax Numbers from a Connected Telephone

If you have connected a telephone to the **EXT** port on your product, you can send a fax by dialing the fax number from the connected telephone. If the recipient's phone number and fax number are the same, you can speak to the recipient before sending the fax.

1. Place your original on the product for faxing.
2. Press the home button, if necessary.
3. Dial the fax number from the connected telephone. Speak to the recipient if necessary.
4. Select **Start Fax** on the LCD screen.
5. Select **Send**.

   **Note:** Your product now communicates with the recipient's fax machine. Do not hang up the telephone.

6. When you hear a fax tone, press one of the buttons to start sending the fax.

   **Note:** If your recipient's fax machine does not print in color, your fax is automatically sent in black-and-white.

7. Hang up the telephone.

**Parent topic:** Sending Faxes from the Product Control Panel

**Related references**

Fax Sending Options

**Related topics**

Placing Originals on the Product

## Sending Faxes Using the Fax Utility - Windows

You can send a fax from a printing program in Windows. You can fax up to 100 pages at a time, including a cover sheet.

1. Open the file you want to fax and select the print command.

   You see a window like this:

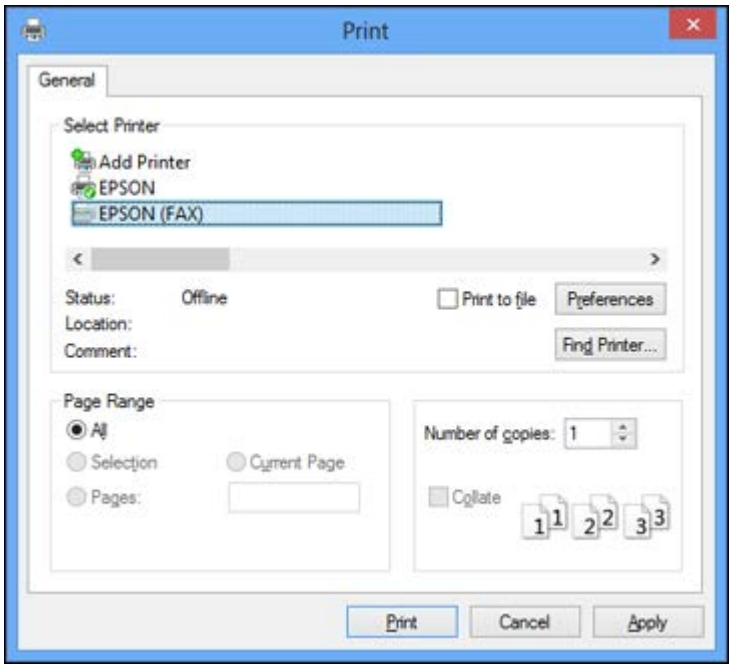


2. Select your product with the **FAX** option as the printer.
3. To change the Paper Size, Orientation, Color, Image Quality, or Character Density settings, click the **Preferences** or **Properties** button.

   **Note:** If you see a **Setup**, **Printer**, or **Options** button, click it. Then click **Preferences** or **Properties** on the next screen. For more information about selecting fax print settings, click **Help.**

4. Select the Page Range as necessary. (Leave the Number of copies set to **1**.)
5. Click **Print** or **OK**.

If you're faxing for the first time, you see a window like this one:

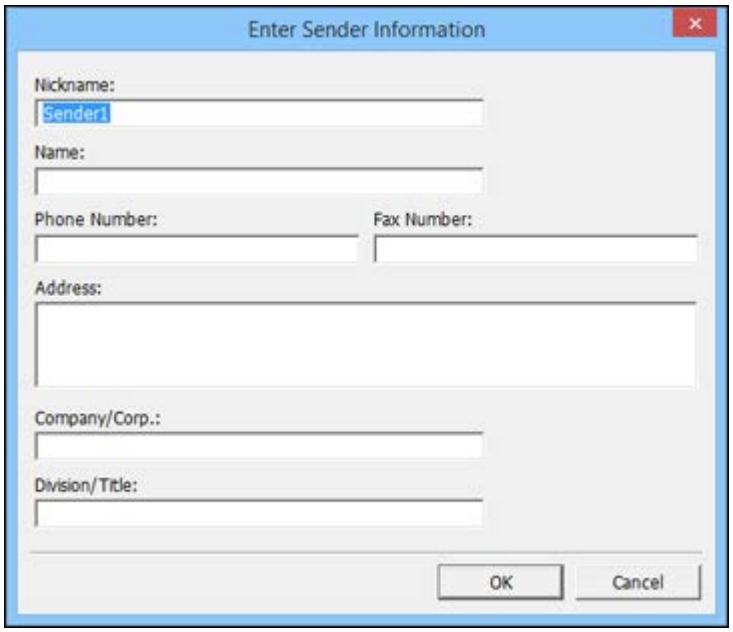


6. Enter your sender information so that recipients can identify the origin of the fax. Then click **OK** to save the sender information.

You see a window like this:

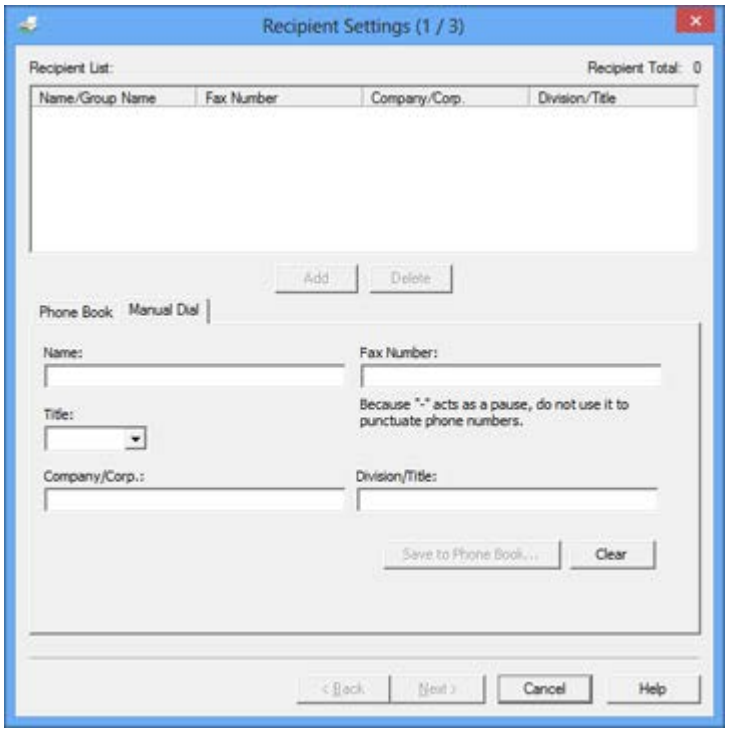


7. Enter the recipient's name and fax number or select a recipient from the phonebook, then click **Next**.

   **Note:** For detailed instructions on using the Epson FAX Utility, click **Help**.

8. Select a cover sheet and enter a subject and message, then click **Next.**
9. Click **Send** to transmit your fax.

**Parent topic:** Sending Faxes

## Sending Faxes Using the Fax Utility - OS X

You can send a fax from a OS X printing program using the FAX Utility. You can fax up to 100 pages at a time, including a cover sheet.

1. Open the file you want to fax.

2. Select the print command in your application.

   **Note:** You may need to select a print icon on your screen, the **Print** option in the **File** menu, or another command. See your application's help utility for details.

3. Select your product **FAX** option as the **Printer** setting.
4. If necessary, click the arrow next to the Printer setting or the **Show Details** button to expand the print window.
5. Select the number of pages you are faxing as the **Pages** setting.

   **Note:** Leave the **Copies** setting set to **1**.

6. Select **Recipient Settings** from the pop-up menu.

You see this window:

7. Do one of the following to choose your recipient:
   - Select a name or group from the **Recipient List**.
   - Enter a name, company, and fax number and click the **+** button.
   - Click the icon and select a recipient from your address book.
8. Select **Fax Settings** from the pop-up menu.

You see this window:

9. Select the **Color** and **Image Quality** settings you want to use for your fax.
10. Click **Fax**.

**Parent topic:** Sending Faxes

# Receiving Faxes

See these sections to receive faxes with your product.

Fax Reception
Receiving Faxes Automatically
Receiving Faxes Manually
Forwarding Received Faxes
Receiving a Fax by Polling
Viewing a Fax on the LCD Screen

**Parent topic:** Faxing

## Fax Reception

Your product will automatically receive and print faxes when you set the Receive Mode to **Auto**.

If you connected a telephone to your product so you can use the same phone line for faxes and voice calls, you can also set your product to receive faxes manually. This allows you to check for a fax tone using the telephone and press a button on your product to receive the fax.

Make sure to load paper in your product and select your fax settings before receiving a fax.

**Note:** If you run out of paper during fax printing, load more paper and press the button indicated on your product's LCD screen to continue.

**Parent topic:** Receiving Faxes

## Receiving Faxes Automatically

To receive faxes automatically, make sure Receive Mode is set to **Auto** (the default setting for the product).

To change the Receive Mode if necessary, select **Setup** > **System Administration** > **Fax Settings** > **Receive Settings** > **Receive Mode**.

If an answering machine is connected, make sure the product's **Rings to Answer** setting is set higher than the number of rings your answering machine is set to answer a call. For example, if the answering machine is set to pick up on the fourth ring, set the product to pick up on the fifth ring or later.

**Parent topic:** Receiving Faxes

**Related references**

Receive Settings - Fax

**Related tasks**

Receiving Faxes Manually

## Receiving Faxes Manually

You can set up your product to receive faxes manually by setting the Receive Mode to **Manual**. This lets you check for a fax tone on the connected telephone before receiving a fax.

1. To change the Receive Mode, select **Setup** > **System Administration** > **Fax Settings** > **Receive Settings** > **Receive Mode** and select **Manual**.
2. When the connected telephone rings, answer the call.
3. If you hear a fax tone, select **Start Fax** on the LCD display.
4. Select **Receive**.
5. Press one of the ⬖ buttons to start receiving the fax.
6. Hang up the telephone.

**Parent topic:** Receiving Faxes

**Related references**

Receive Settings - Fax

**Related tasks**

Receiving Faxes Automatically

## Forwarding Received Faxes

You can forward received faxes to another fax machine, or convert the faxes into PDF documents and forward them to a shared folder on the network or to an email address. Forwarded faxes are deleted from the product's memory. Before using this feature, make sure the date and time are set correctly, the forwarding destination is set up in the contact list, and the email server settings are configured.

**Note:** Color documents cannot be forwarded to another fax machine.

1. Press the home button, if necessary.
2. Select **Setup**.

3. Scroll down and select **System Administration**. Enter the administrator password, if necessary.

4. Scroll down and select **Fax Settings**.
5. Select **Output Settings**.
6. Select **Fax Output**.
7. Select **Settings**.
8. Select **Forward**.
9. Select **On**.

   **Note:** If you want to print the fax automatically before forwarding it, select **Yes and Print**.

10. Select the forwarding destination from the contact list.

    **Note:** Select **View** to sort your contacts by the printer's features. You can select up to 5 forwarding destinations.

11. When you are finished selecting your forwarding destinations, select **Proceed**.
12. Confirm the displayed forwarding destinations are correct and select **Close**.
13. Select **Options When Forwarding Failed**.
14. Select the option you want to occur when received faxes fail to be forwarded; print the faxes or save them in the printer's inbox.
15. If you are forwarding to an email address, you can specify the subject email by selecting **Email Subject to Forward**.

    **Note:** If you are forwarding faxes to a shared folder on the network or an email address, you can test if fax forwarding was set up correctly by sending a scanned image to the destination using the scan to email or scan to network folder/ftp option. If you are forwarding faxes to a shared folder on the network, you can set up FAX Utility to notify you whenever a new fax is received.

**Parent topic:** Receiving Faxes

**Related tasks**

Selecting the Date and Time

Starting a Scan Using the Product Control Panel

**Related topics**

Setting Up Contacts and Contact Groups

## Receiving a Fax by Polling

You can use polling to receive a fax from another fax machine (such as a fax information service).

**Note:** You cannot use polling to receive a fax from a fax information service that uses audio guidance.

1. Press the home button, if necessary.
2. Select **Fax**.

   You see a screen like this:

3. Select **Menu**.
4. Select **Polling Receive** and select **On**.
5. Enter the fax number you expect to receive the fax from.
6. Press one of the ◇ buttons to start receiving the fax.

**Parent topic:** Receiving Faxes

## Viewing a Fax on the LCD Screen

You can save received faxes in your product's memory and view them on the LCD screen.

**Note:** To use this feature, you must first enable Save to Inbox from the Output Settings menu. The Inbox can be locked by an administrator. If you cannot access the Inbox, contact your administrator for assistance.

1. Press the home button, if necessary.

2. Check the icon on the LCD screen. It turns on if there are any unread or unprinted faxes in the product's memory.
3. Select **Fax**.
4. Select **Open Inbox**. Enter the administrator password, if necessary.
5. Select the fax you want to view.

   You see the fax displayed on the screen.
6. Select **Menu**.
7. Select one of the printer/deleting options and follow the on-screen instructions.

**Note:** Delete faxes after you print or view them to prevent the product's memory from filling up. When the memory is full, you cannot receive or send faxes.

**Parent topic:** Receiving Faxes

## Checking Fax Status

You can use the **Status** button to check the status of current fax jobs, or faxes that have been received or sent.

1. Press the **Status** button.

   You see a screen like this:

2. Do one of the following:
   - To check the status of currrent fax jobs, select **Job Monitor**, select **Communication Job**, and select the fax job you want to check.

- To check the history of faxes that have been sent or received, select **Job History**, select **Receive Job** or **Send Job**, and select the job you want to check.
- To check received faxes that have been saved in the product's memory, select **Job Storage** and select **Inbox**.

**Parent topic:** Faxing

# Printing Fax Reports

You can select from several fax reports to print whenever necessary. You can also have the fax log printed automatically by turning on **Fax Log Auto Print**.

1. Press the home button, if necessary.
2. Select **Fax**.

   You see a screen like this:

3. Select **Menu**, select **Fax Report**, and select the report you want to print.

Fax Report Options

**Parent topic:** Faxing

## Fax Report Options

Select the fax report or list you want to print.

**Fax Settings List**
Print a list of the current fax communication settings.

**Fax Log**
View or print a report on recent fax transmissions.

**Last Transmission**
Print a report on the previous fax that was sent or received through polling.

**Stored Fax Documents**
Print a list of the fax jobs currently stored in the product's memory.

**Protocol Trace**
Print a detailed report for the previous sent or received fax.

**Parent topic:** Printing Fax Reports

# Using USB Flash Drives With Your Product

Follow the instructions here to work with a USB flash drive inserted into your product.

Inserting a USB Flash Drive
Removing a USB Flash Drive
Viewing and Printing From the LCD Screen
Transferring Files on a USB Flash Drive

## Inserting a USB Flash Drive

Insert your USB flash drive into the USB port on the front of the product.

**Note:** Epson cannot guarantee the compatibility of your device. Make sure the files on the device are compatible with the product.

USB Device Photo File Specifications

**Parent topic:** Using USB Flash Drives With Your Product

**Related tasks**
Removing a USB Flash Drive

### USB Device Photo File Specifications

You can use USB devices with your product containing files that meet these specifications.

| | |
|---|---|
| **File format** | JPEG with the Exif version 2.3 standard |
| | TIFF 6.0-compliant uncompressed images: RGB full-color or binary (not CCITT-encoded) |
| **Image size** | 80 × 80 pixels to 10200 × 10200 pixels |
| **File size** | Up to 2GB |
| **Number of files** | JPEG: Up to 9990 |
| | TIFF: Up to 999 |
| | PDF: Up to 999 |

**Parent topic:** Inserting a USB Flash Drive

## Removing a USB Flash Drive

After you finish working with a USB flash drive, follow these steps to remove it.

1. If your product is connected to your computer using a USB cable, do one of the following:
   - **Windows**: Open the **My Computer**, **Computer**, or **Windows Explorer** utility. Then right-click the name of your flash drive (listed as a removable disk) and select **Eject**.
   - **OS X**: Drag the removable disk icon for your flash drive from the desktop into the trash.

   **Caution:** Do not remove a flash drive before completing the procedure above or you may lose data from the flash drive.

2. Pull the flash drive out of the USB port on the front of the product.

**Parent topic:** Using USB Flash Drives With Your Product

## Viewing and Printing From the LCD Screen

See these sections to view and print photos or other files displayed on your product's LCD screen.

Printing JPEG Photos
Printing TIFF and PDF Files
Photo Adjustment Options - Device Mode
Print Setting Options - Device Mode

**Parent topic:** Using USB Flash Drives With Your Product

### Printing JPEG Photos

You can select JPEG photos for printing as you view them on the LCD screen.

1. Press the home button, if necessary.
2. Select **Memory Device**.
3. Select **JPEG**.

You see a screen like this:

**Note:** If you have more than 999 JPEG images on your device, the images are divided into groups, and you must first select the group you want to display.

4. Do one of the following to select your photos:
   - To select individual photos, select the thumbnail image of the photo you want to print, then use the numeric keypad on the control panel or press **+** or **–** on the LCD screen to select the number of copies (up to 99). Press the left or right arrow buttons to scroll through and select additional photos, or press the ↩ back button to return to the thumbnail image view and select another photo.
   - To select all photos, select **Options** > **Select Images** > **Select All Images**.
5. To adjust a photo (adjustments modify only your printed copy, not the original file), select its thumbnail image and select **Adjustments**. Make the necessary adjustments and press the ↩ back button.
6. To change the print settings, select **Settings** and select the necessary settings. When you are finished, press the ↩ back button.
7. When you are ready to print, press one of the ◇ buttons.

   **Note:** To cancel printing, press the ⊗ **Stop** button.

**Parent topic:** Viewing and Printing From the LCD Screen

**Related references**

Photo Adjustment Options - Device Mode

Print Setting Options - Device Mode

## Printing TIFF and PDF Files

You can select and print TIFF or PDF files from a USB flash drive.

1. Press the home button, if necessary.
2. Select **Memory Device**.
3. Select **TIFF** or **PDF**.

   You see a list of the available files.
4. Select the file you want to print.

   You see information about the file.
5. Select **Proceed**.
6. Do the following as necessary:
   - To print more than one copy, use the numeric keypad on the control panel or press **+** or **–** on the LCD screen to select the number of copies (up to 99).
   - To change the print settings, select **Settings** and select the necessary settings. When you are finished, press the back button.
7. Select **Proceed**.
8. When you are ready to print, press one of the buttons.

   **Note:** To cancel printing, press the **Stop** button.

**Parent topic:** Viewing and Printing From the LCD Screen

**Related references**

Print Setting Options - Device Mode

## Photo Adjustment Options - Device Mode

Select the image adjustment options you want to use when viewing and printing photos displayed on the LCD screen.

| Photo adjustment settings | Available options | Description |
|---|---|---|
| **Fix Photo** | **On** | Automatically adjusts the brightness, contrast, and saturation of the photo based on the **Advanced** > **Scene Detection** setting that is selected |
| | **Off** | Turns off automatic adjustments; see **Note** below |
| | **P.I.M.** | Uses your camera's PRINT Image Matching or Exif Print adjustments |
| **Fix Red-Eye** | **Off - This Image** | Automatically fixes the red-eye effect in photos |
| | **On - This Image** | |
| | **Off - All Image** | |
| | **On - All Image** | |

**Note: Fix Photo** uses a sophisticated face recognition technology to optimize photos that include faces. For this to work, both eyes and the nose must be visible in the subject's face. If your photo includes a face with an intentional color cast, such as a statue, you may want to turn off **Fix Photo** to retain the special color effects.

**Parent topic:** Viewing and Printing From the LCD Screen

## Print Setting Options - Device Mode

Select the print settings you want to use when printing from a USB flash drive.

**Note:** Not all options or settings may be available, depending on the file format.

| Print settings | Available options | Description |
|---|---|---|
| **Paper Source** | Various paper size and type settings | Indicates the source that contains the paper size and type you want to print on |
| **Quality** | **Standard** | Provides good quality for most prints |
| | **Best** | Provides the highest quality for special prints |
| **Date** | Various date formats | Prints the date the photo was taken on the photo in the format you select |

| Print settings | Available options | Description |
|---|---|---|
| **Fit Frame** | **On** | Automatically crops the photo to fit into the selected photo layout |
| | **Off** | Turns off automatic cropping |
| **Bidirectional** | **On** | Prints at normal speed |
| | **Off** | Slows down printing to improve print quality |
| **2-Sided** | **On** | Select **On** to print PDF files double-sided. You can also select the **Binding Margin** and **Dry Time** if necessary. |
| | **Off** | |
| **Print Order** | **Last Page on Top** | Select the order for printing multi-page TIFF or PDF files |
| | **First Page on Top** | |

**Parent topic:** Viewing and Printing From the LCD Screen

# Transferring Files on a USB Flash Drive

You can transfer files to and from a USB flash drive inserted into the USB port on the front of your product.

Setting Up File Sharing for File Transfers From Your Computer

Transferring Files from a USB Flash Drive to Your Computer

**Parent topic:** Using USB Flash Drives With Your Product

## Setting Up File Sharing for File Transfers From Your Computer

Before you transfer files from a computer to a USB flash drive inserted into the USB port on the front of your product, you may need to set up your product's file sharing settings.

**Caution:** Remove the flash drive before you change this setting or you may lose data from the flash drive.

**Note:** These settings can be locked by an administrator. If you cannot access these settings, contact your administrator for assistance.

1. Press the home button, if necessary.
2. Select **Setup**.

3. Scroll down and select **System Administration**. Enter the administrator password, if necessary.
4. Select **Printer Settings**.
5. Select **Memory Device Interface**.

   You see a screen like this:

6. Make sure **Memory Device** is set to **Enable**.
7. Select **File Sharing**.
8. Select the way your computer is connected to the product: either **USB** or **Wi-Fi/Network**.

**Parent topic:** Transferring Files on a USB Flash Drive

**Related tasks**

Removing a USB Flash Drive

## Transferring Files from a USB Flash Drive to Your Computer

You can transfer files to and from a USB flash drive inserted into the USB port on the front of your product and a computer connected to your product.

**Note:** Do not transfer files to and from a flash drive while you are printing from the flash drive.

1. Make sure your product is connected to a computer.
2. Insert a flash drive into the USB port on the front of your product.
3. Do one of the following to access your flash drive files from your computer:
   - **Windows**: Select the **Computer** or **My Computer** utility, then select the removable disk icon.
   - **OS X with a USB connection**: Look for the removable disk icon on your desktop, then select it.

- **OS X with a network connection**: Select the hard drive icon on your desktop or select **Computer** from the **Go** menu, select your product in the **SHARED** section of the sidebar (you may need to widen the sidebar to see the name), and select the **USBSTORAGE** icon.

4. Select the folder that contains your files.
5. Drag the files you want to transfer to the desired folder on your computer or on your flash drive.

**Note:** Your product's LCD screen does not update to display new information about your flash drive after you copy files to it or delete files from it. Remove and insert the flash drive to update the information.

**Parent topic:** Transferring Files on a USB Flash Drive

**Related tasks**

Inserting a USB Flash Drive

# Replacing Ink Cartridges and Maintenance Boxes

The maintenance box stores ink that gets flushed from the system during print head cleaning. When an ink cartridge is expended or the maintenance box is at the end of its service life, you need to replace it.

You may also need to replace a cartridge that is more than six months old if your printouts do not look their best, even after cleaning and aligning the print head.

**Note:** Please dispose of your used Epson branded ink cartridges and maintenance boxes responsibly and in accordance with local requirements. If you would like to return your used ink cartridges and maintenance boxes to Epson for proper disposal, please go to epson.com/recycle for more information.


Check Cartridge and Maintenance Box Status
Purchase Epson Ink Cartridges and Maintenance Box
Removing and Installing Ink Cartridges
Printing with Black Ink and Expended Color Cartridges
Conserving Low Black Ink with Windows
Replacing the Maintenance Box


## Check Cartridge and Maintenance Box Status

Your printer and its software will let you know when an ink cartridge is low or expended, or when the maintenance box needs to be replaced.

**Note:** When using the Epson Universal Print Driver or PostScript (PS3) printer software with the product, you can check ink cartridge and maintenance box status by using the printer buttons or the utilities included with the standard Epson printer software. To download the standard Epson printer software, go to epson.com/support/wf8590.


Checking Cartridge Status on the LCD Screen
Checking Cartridge and Maintenance Box Status with Windows
Checking Cartridge and Maintenance Box Status with OS X


**Parent topic:** Replacing Ink Cartridges and Maintenance Boxes

### Checking Cartridge Status on the LCD Screen

When one of your cartridges is low, you see the icon on the LCD screen and the orange **i Status** light flashes.

When a cartridge is expended, you see the icon and the orange **Status** light stays on.

You can use the **Status** button check the status of the cartridges and maintenance box.

1. Press the **Status** button.
2. Select **Printer Information**.

   You see a screen like this:

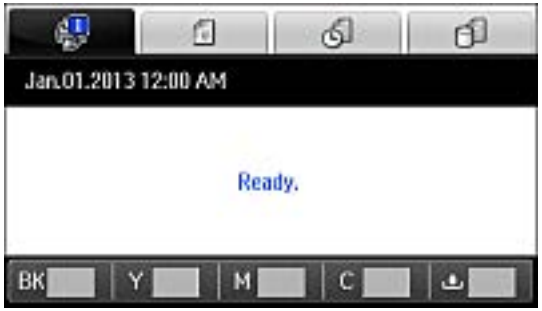


   The ink and maintenance box levels are displayed at the bottom of the screen.

   **Note:** The displayed ink and maintenance box levels are approximate.

3. For more information, select the ink cartridge images at the bottom of the screen.

**Parent topic:** Check Cartridge and Maintenance Box Status

**Related tasks**

Removing and Installing Ink Cartridges

Replacing the Maintenance Box

## Checking Cartridge and Maintenance Box Status with Windows

A low ink reminder appears if you try to print when ink is low, and you can check your cartridge or maintenance box status at any time using a utility on your Windows computer.

1. To check your status, access the Windows Desktop, double-click the product icon in the Windows taskbar, and click **Details**.

You see this window:

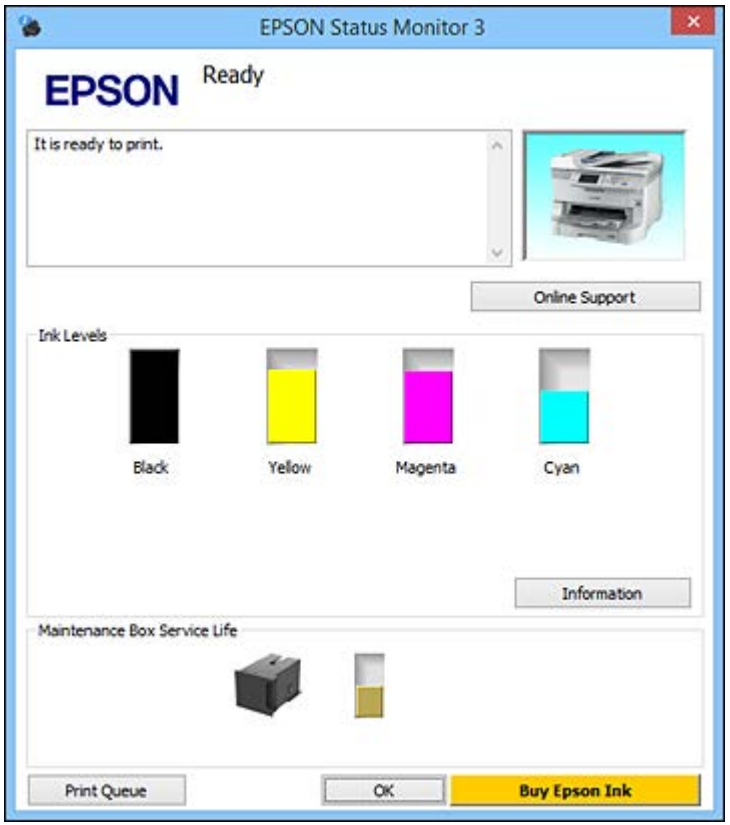


2. Replace or reinstall the maintenance box or any ink cartridge as indicated on the screen.

   **Note:** If any of the cartridges installed in the product is broken, incompatible with the product model, or improperly installed, Epson Status Monitor will not display an accurate cartridge status.

3. To disable the low ink reminder, right-click the product icon in the Windows taskbar and select **Monitoring Preferences**.

You see this window:

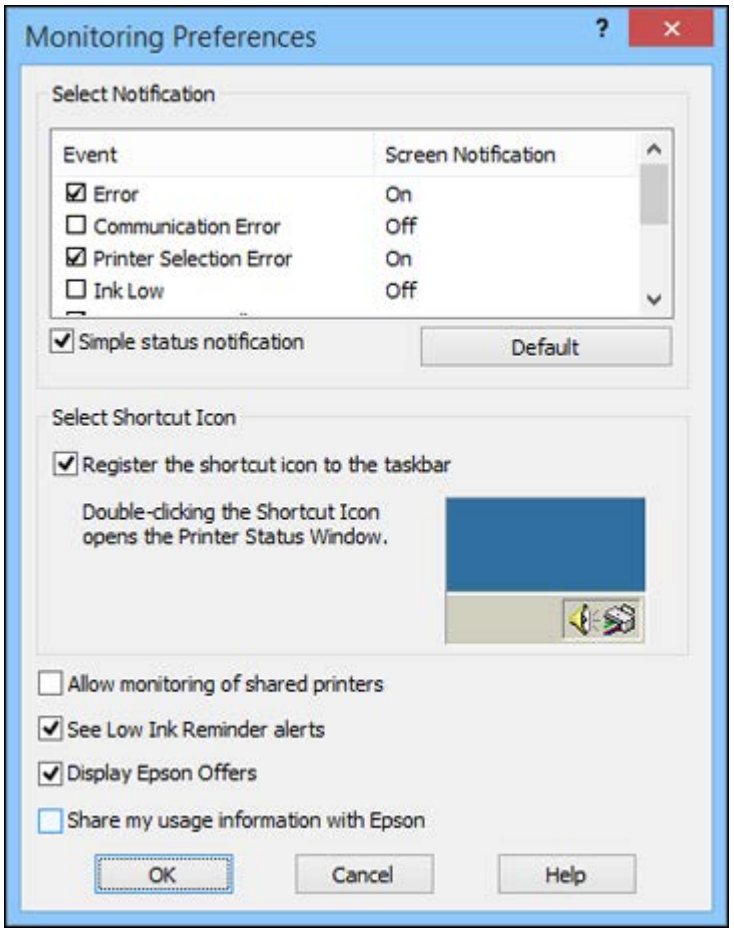


4. Deselect the **See Low Ink Reminder alerts** checkbox at the bottom of the screen.
5. To disable promotional offers, deselect the **Display Epson Offers** checkbox.
6. Click **OK**.

**Parent topic:** Check Cartridge and Maintenance Box Status

**Related tasks**

Removing and Installing Ink Cartridges

Replacing the Maintenance Box

## Checking Cartridge and Maintenance Box Status with OS X

You can check the status of your ink cartridges and maintenance box using a utility on your Mac.

1. Do one of the following:
   - **OS X 10.6/10.7/10.8/10.9**: In the Apple menu or the Dock, select **System Preferences**. Select **Print & Fax**, **Print & Scan**, or **Printers & Scanners**, select your product, and select **Options & Supplies**. Select **Utility** and select **Open Printer Utility**.
   - **OS X 10.5**: In the Apple menu or the Dock, select **System Preferences**. Select **Print & Fax**, select your product, and select **Open Print Queue**. Select **Utility**.
2. Select **EPSON Status Monitor**.

You see this window:

3. Do the following as necessary:
   - You can update the ink cartridge and maintenance box status by clicking **Update**.
   - Replace or reinstall the maintenance box or any ink cartridge as indicated on the screen.

   **Note:** If any of the cartridges installed in the product is broken, incompatible with the product model, or improperly installed, Epson Status Monitor will not display an accurate cartridge status.

**Parent topic:** Check Cartridge and Maintenance Box Status

**Related tasks**

Removing and Installing Ink Cartridges

Replacing the Maintenance Box

# Purchase Epson Ink Cartridges and Maintenance Box

You can purchase genuine Epson ink, maintenance boxes, and paper at Epson Supplies Central at epson.com/ink3 (U.S. sales) or epson.ca (Canadian sales). You can also purchase supplies from an Epson authorized reseller. To find the nearest one, call 800-GO-EPSON (800-463-7766).

**Note:** This product uses only genuine Epson-brand cartridges. Other brands of ink cartridges and ink supplies are not compatible and, even if described as compatible, may not function properly.

The cartridges included with the printer are designed for printer setup and not for resale. After some ink is used for priming, the rest is available for printing. Yields vary considerably based on images printed, print settings, paper type, frequency of use, and temperature. For print quality, a variable amount of ink remains in the cartridge after the "replace cartridge" indicator comes on.

Ink Cartridge and Maintenance Box Part Numbers

**Parent topic:** Replacing Ink Cartridges and Maintenance Boxes

## Ink Cartridge and Maintenance Box Part Numbers

Use these part numbers when you order or purchase a new maintenance box or ink cartridges.

Maintenance box part number: T671200

**Note:** For best printing results, use up a cartridge within 6 months after installing it.

| Ink color | Part number | | |
|---|---|---|---|
| | Standard-capacity | High-capacity | Extra High-capacity |
| Black | 748 | 748XL | 748XXL |
| Cyan | 748 | 748XL | 748XXL |
| Magenta | 748 | 748XL | 748XXL |
| Yellow | 748 | 748XL | 748XXL |

**Parent topic:** Purchase Epson Ink Cartridges and Maintenance Box

# Removing and Installing Ink Cartridges

Make sure you have your replacement cartridges handy before you begin. You must install new cartridges immediately after removing the old ones.

**Caution:** Leave your old cartridges in the printer until you are ready to replace them to prevent the print head nozzles from drying out. Do not open ink cartridge packages until you are ready to install the ink. Cartridges are vacuum packed to maintain reliability.

1. Turn on your product.
2. If an ink cartridge is low or expended, a message appears on your product and on your computer screen. Note which cartridges need to be replaced.
3. Open the front cover.

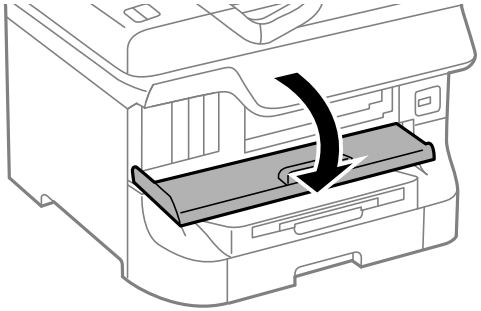

4. Push in the ink cartridge that you want to replace.

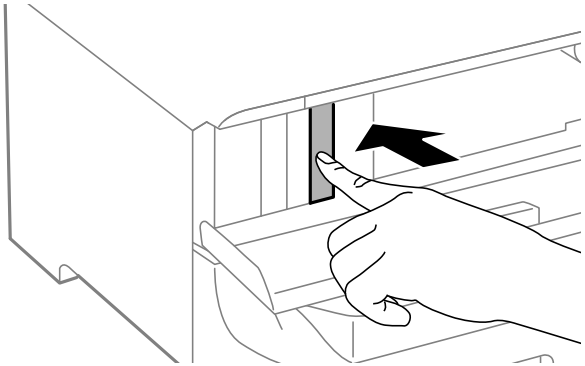

The ink cartridge pops out slightly.

5. Pull the ink cartridge out of the slot.

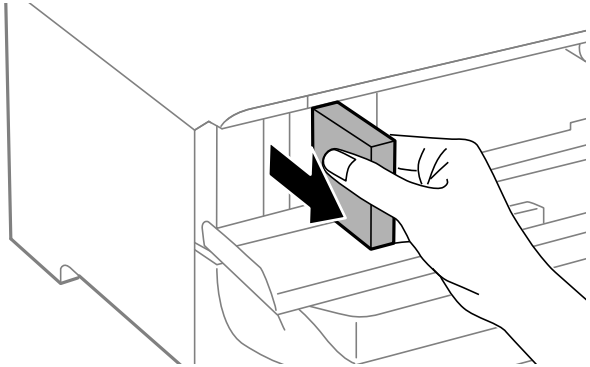

**Note:** Dispose of used cartridges carefully. Do not take the used cartridge apart or try to refill it.

**Warning:** If ink gets on your skin, wash it thoroughly with soap and water. If ink gets into your eyes, flush them immediately with water. If ink gets into your mouth, spit it out and see a doctor right away. Keep ink cartridges out of the reach of children.

6. Remove the cartridge from the package.

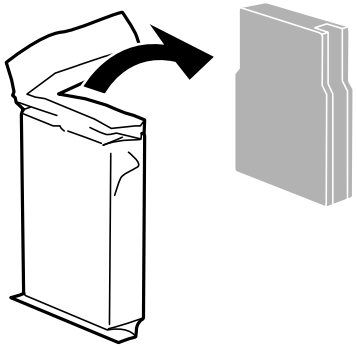

**Caution:** Do not touch the green chip on the cartridge. Install the new cartridge immediately after removing the old one; if you do not, the print head may dry out and be unable to print.

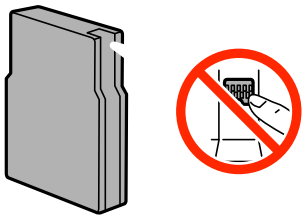

7. Gently shake the ink cartridge horizontally for about five seconds as shown.

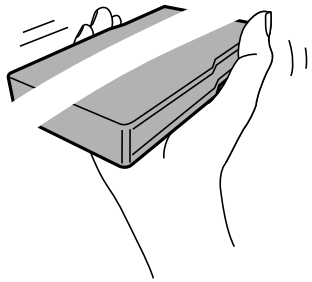

**Caution:** Do not remove any labels or seals, or ink will leak.

8. Insert the new cartridge into the holder and push it in until it clicks into place.
9. If the **Check** option is displayed on the LCD screen, select it to make sure the cartridges are installed correctly.

   **Caution:** If you see a message that an ink cartridge is installed incorrectly, press in the ink cartridge until it clicks into place.

10. When you are finished, close the front cover.

    The product starts priming the ink and returns to its previous state when finished.

**Note:** Do not turn off the printer during ink replacement.

**Caution:** If you remove an ink cartridge for later use, protect the ink supply area from dirt and dust and store it in the same environment as the printer. The valve in the ink supply port is designed to contain any excess ink, but do not touch the ink supply port or surrounding area. Always store ink cartridges with the label facing up; do not store cartridges upside-down.

**Parent topic:** Replacing Ink Cartridges and Maintenance Boxes

**Related concepts**

Purchase Epson Ink Cartridges and Maintenance Box

# Printing with Black Ink and Expended Color Cartridges

When a color ink cartridge is expended, you can temporarily continue printing from your computer using black ink. Replace the expended color cartridge as soon as possible for future printing.

**Note:** You cannot print with expended color ink cartridges using your product's control panel.

Printing with Expended Color Cartridges - Windows
Printing with Expended Color Cartridges - OS X

**Parent topic:** Replacing Ink Cartridges and Maintenance Boxes

## Printing with Expended Color Cartridges - Windows

If you see a message during printing telling you that you can temporarily print in black ink with an expended color cartridge, you can cancel your print job and select settings to print on plain paper or on an envelope.

**Note:** To use this feature, Epson Status Monitor must be enabled.

1. Click **Cancel** or **Cancel Print** to cancel your print job.

   **Note:** If the message screen appears on another computer on a network, you may need to cancel the print job using the product control panel.

2. Load plain paper or an envelope in your product.
3. Access the print settings in your print application.
4. Click the **Main** tab.
5. Select **Plain Paper/Bright White Paper** or **Envelope** as the paper type setting.

6. Select the **Black/Grayscale** checkbox.
7. Click **OK**.
8. Print your document.

   Epson Status Monitor 3 displays a print message.
9. Click **Print in Black** to print your document.

**Parent topic:** Printing with Black Ink and Expended Color Cartridges

## Printing with Expended Color Cartridges - OS X

If printing stops, you can cancel your print job and select settings to temporarily print with only black ink on plain paper or on an envelope.

1. Click the printer icon in the Dock.
2. If you see a message telling you that you can temporarily print with only black ink, click the **Delete** icon to cancel your print job. (**OS X 10.8/10.9**: Click the icon to cancel your print job. If an error message is displayed, click **OK**.)

   **Note:** If the message screen appears on another computer on a network, you may need to cancel the print job using the product control panel.
3. In the Apple menu or the Dock, select **System Preferences**.
4. Select **Print & Fax**, **Print & Scan**, or **Printers & Scanners**, select your product, and select **Options & Supplies**.
5. Select **Driver** or **Options**.

You see a screen like this:

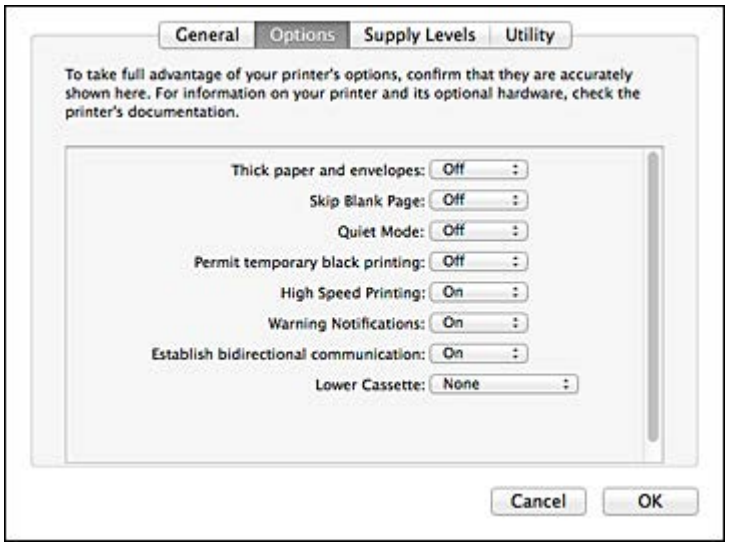


6. Select **On** as the **Permit temporary black printing** setting.
7. Click **OK**.
8. Close the utility window.
9. Load plain paper or an envelope in your product.
10. Access the print settings in your print application.
11. Select **Print Settings** from the pop-up menu.
12. Select **Plain Paper/Bright White Paper** or **Envelope** as the paper type setting.
13. Select the **Grayscale** option.
14. Click **Print** to print your document.

**Parent topic:** Printing with Black Ink and Expended Color Cartridges

## Conserving Low Black Ink with Windows

The following window appears when black ink runs low and there is more color ink.

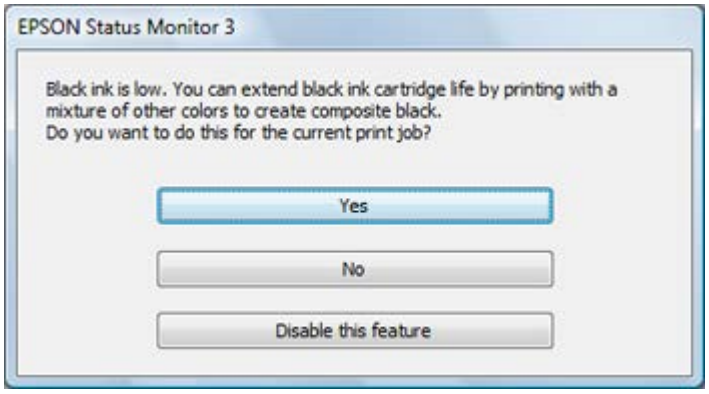


**Note:** The window appears only when you have selected **Plain Paper/Bright White Paper** as the paper type setting, and depends on other selected print settings. To use this feature, Epson Status Monitor must be enabled.

- Click **Yes** to use a mixture of color inks to create black, or **No** to continue using the remaining black ink for the document you are printing.
- Click **Disable this feature** to continue using the remaining black ink.

  **Note:** If you disable this feature, it remains disabled until you install a new black ink cartridge.

**Parent topic:** Replacing Ink Cartridges and Maintenance Boxes

## Replacing the Maintenance Box

Make sure you have a new maintenance box before you begin.

**Caution:** Do not reuse a maintenance box that has been removed and left uninstalled for more than a week. Keep the maintenance box away from direct sunlight.

1. Make sure the product is not printing.

2. Remove the new maintenance box from its package.

   **Caution:** Do not touch the green chip on the maintenance box. Do not remove the film on the box, or ink may leak.

3. Open the rear cover 1 (D1).

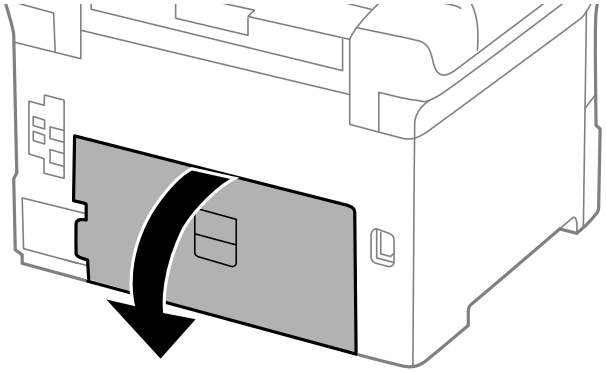

4. Grasp the maintenance box as shown and pull it out of its holder.

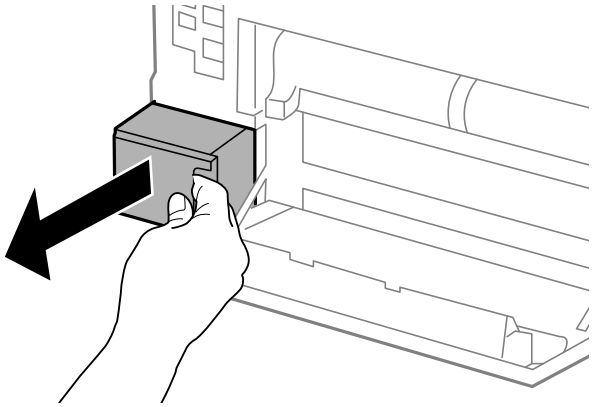

   **Note:** Do not tilt the used maintenance box or take it apart.

**Warning:** If ink gets on your skin, wash it thoroughly with soap and water. If ink gets into your eyes, flush them immediately with water. If ink gets into your mouth, spit it out and see a doctor right away. Keep the maintenance box out of the reach of children and do not drink the ink.

5. Place the used maintenance box in the plastic bag that came with the new maintenance box. Seal the bag and dispose of it carefully.

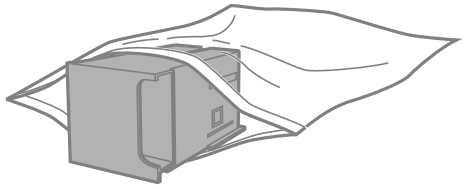

6. Insert the new maintenance box into the holder and push it all the way in.
7. Close the rear cover 1 (D1).

**Parent topic:** Replacing Ink Cartridges and Maintenance Boxes

**Related concepts**

Purchase Epson Ink Cartridges and Maintenance Box

# Adjusting Print Quality

If your print quality declines, you may need to run a utility to clean or align the print head.

**Note:** When using the PostScript (PS3) printer software with the product, you can clean and align the print head and run a nozzle check by using the printer buttons or the utilities included with the standard Epson printer software. To download the standard Epson printer software, go to epson.com/support/wf8590.

If running these utilities does not solve the problem, you may need to replace the ink cartridges.

Print Head Maintenance
Print Head Alignment
Cleaning the Paper Guide

## Print Head Maintenance

If your printouts become too light, or you see dark or light bands across them, you may need to clean the print head nozzles. Cleaning uses ink, so clean the nozzles only if print quality declines.

You can check for clogged nozzles before you clean them so you don't clean them unnecessarily.

**Note:** You cannot clean the print head if an ink cartridge is expended, and may not be able to clean it when a cartridge is low. You must replace the cartridge first.

Print Head Nozzle Check
Print Head Cleaning

**Parent topic:** Adjusting Print Quality

**Related topics**
Replacing Ink Cartridges and Maintenance Boxes

### Print Head Nozzle Check

You can print a nozzle check pattern to check for clogged nozzles.

Checking the Nozzles Using the Product Control Panel
Checking the Nozzles Using a Computer Utility

**Parent topic:** Print Head Maintenance

### Checking the Nozzles Using the Product Control Panel

You can check the print head nozzles using the control panel on your product.

1. Make sure there are no errors on the LCD screen.
2. Load a few sheets of plain paper in the product.
3. Press the home button, if necessary.
4. Select **Setup**.
5. Select **Maintenance**.

   You see a screen like this:

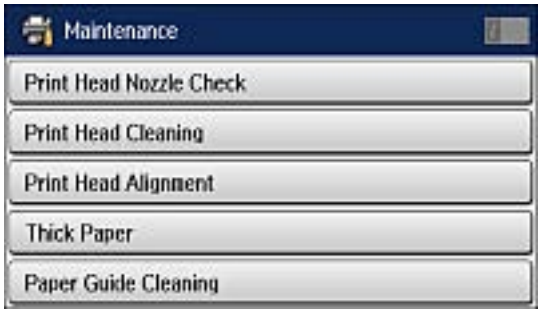


6. Select **Print Head Nozzle Check**.

   You see a screen like this:

7. Press the **Color** button.

The nozzle pattern prints.

8. Check the printed pattern to see if there are gaps in the lines.

   **Print head is clean**

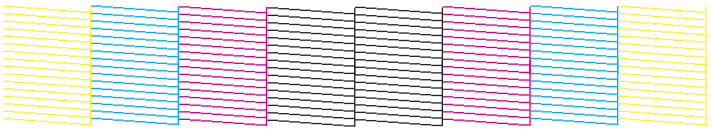

   **Print head needs cleaning**

9. Do one of the following:
   - If there are no gaps, select **Done**.
   - If there are gaps or the pattern is faint, select **Clean the Print Head** and continue.
10. Follow the instructions on the screen to clean the print head, check the nozzles, and repeat the process as necessary.

    **Caution:** Never turn off the product or open the front cover during a cleaning cycle or you may not be able to print.

If you don't see any improvement after cleaning the print head up to 4 times, turn off the product, if possible, and wait at least 6 hours. Then try cleaning the print head again. If quality still does not improve, one of the ink cartridges may be old or damaged and needs to be replaced.

**Parent topic:** Print Head Nozzle Check

**Related concepts**

Print Head Cleaning

**Related topics**

Loading Paper

### Checking the Nozzles Using a Computer Utility

You can check the print head nozzles using a utility on your Windows or Mac computer.

1. Load a few sheets of plain paper in the product.
2. Do one of the following:
   - **Windows:** Access the Windows Desktop and right-click the product icon in the Windows taskbar.
   - **OS X 10.6/10.7/10.8/10.9**: In the Apple menu or the Dock, select **System Preferences**. Select **Print & Fax**, **Print & Scan**, or **Printers & Scanners**, select your product, and select **Options & Supplies**. Select **Utility** and select **Open Printer Utility**.
   - **OS X 10.5**: In the Apple menu or the Dock, select **System Preferences**. Select **Print & Fax**, select your product, and select **Open Print Queue**. Select **Utility**.
3. Select **Nozzle Check**.

   You see a window like this:

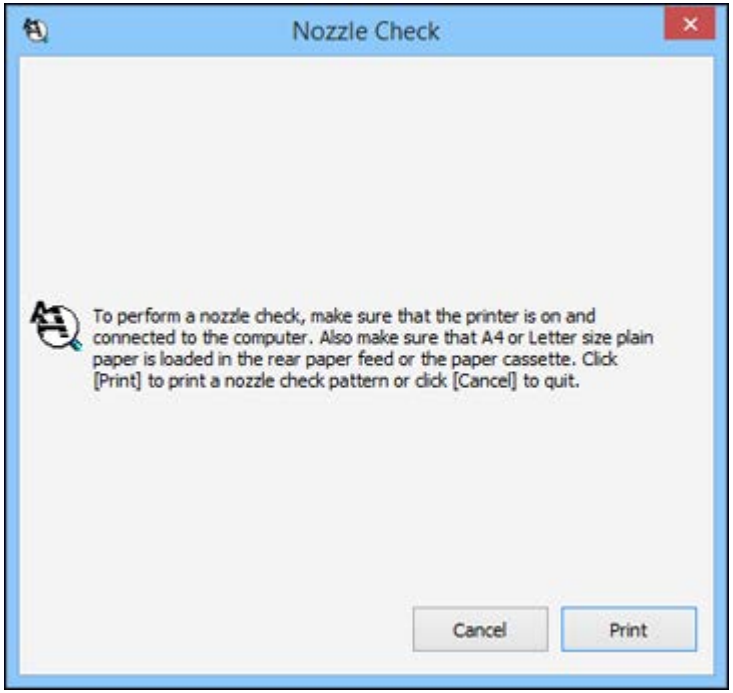

4. Click **Print**.
5. Check the printed pattern to see if there are gaps in the lines.

   **Print head is clean**

   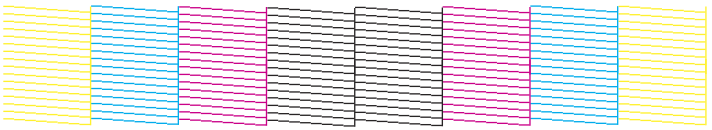

   **Print head needs cleaning**

6. If there are no gaps, click **Finish**.

   If there are gaps or the pattern is faint, clean the print head.

**Parent topic:** Print Head Nozzle Check

**Related concepts**

Print Head Cleaning

**Related topics**

Loading Paper

## Print Head Cleaning

If print quality has declined and the nozzle check pattern indicates clogged nozzles, you can clean the print head.

Cleaning the Print Head Using the Product Control Panel

Cleaning the Print Head Using a Computer Utility

**Parent topic:** Print Head Maintenance

**Related tasks**

Removing and Installing Ink Cartridges

### Cleaning the Print Head Using the Product Control Panel

You can clean the print head using the control panel on your product.

1. Make sure there are no errors on the LCD screen.
2. Load a few sheets of plain paper in the product.
3. Press the home button, if necessary.
4. Select **Setup**.
5. Select **Maintenance**.

   You see a screen like this:

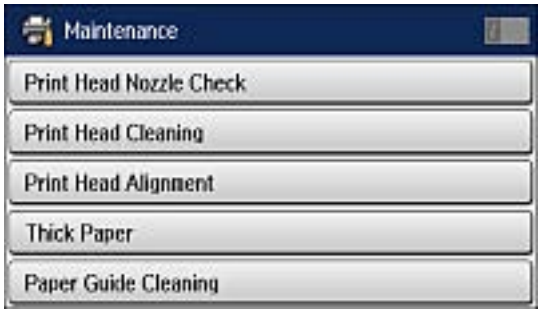


6. Select **Print Head Cleaning**.

   You see a screen like this:

7. Press the **Color** button to clean the print head.

When the cleaning cycle is finished, you see a message on the screen.

**Caution:** Never turn off the product or open the front cover during a cleaning cycle or you may not be able to print.

8. Select **Print Nozzle Check Pattern**.
9. Press the ◈ **Color** button to confirm that the print head is clean.

If you don't see any improvement after cleaning the print head up to 4 times, wait at least 6 hours without printing or longer if printing. Then try cleaning the print head again. If quality still does not improve, one of the ink cartridges may be old or damaged and needs to be replaced.

**Parent topic:** Print Head Cleaning

**Related tasks**

Cleaning the Print Head Using a Computer Utility

**Related topics**

Loading Paper

## Cleaning the Print Head Using a Computer Utility

You can clean the print head using a utility on your Windows or Mac computer.

1. Load a few sheets of plain paper in the product.
2. Do one of the following:
   - **Windows:** Access the Windows Desktop and right-click the product icon in the Windows taskbar.
   - **OS X 10.6/10.7/10.8/10.9**: In the Apple menu or the Dock, select **System Preferences**. Select **Print & Fax**, **Print & Scan**, or **Printers & Scanners**, select your product, and select **Options & Supplies**. Select **Utility** and select **Open Printer Utility**.
   - **OS X 10.5**: In the Apple menu or the Dock, select **System Preferences**. Select **Print & Fax**, select your product, and select **Open Print Queue**. Select **Utility**.
3. Select **Head Cleaning**.

You see a window like this:

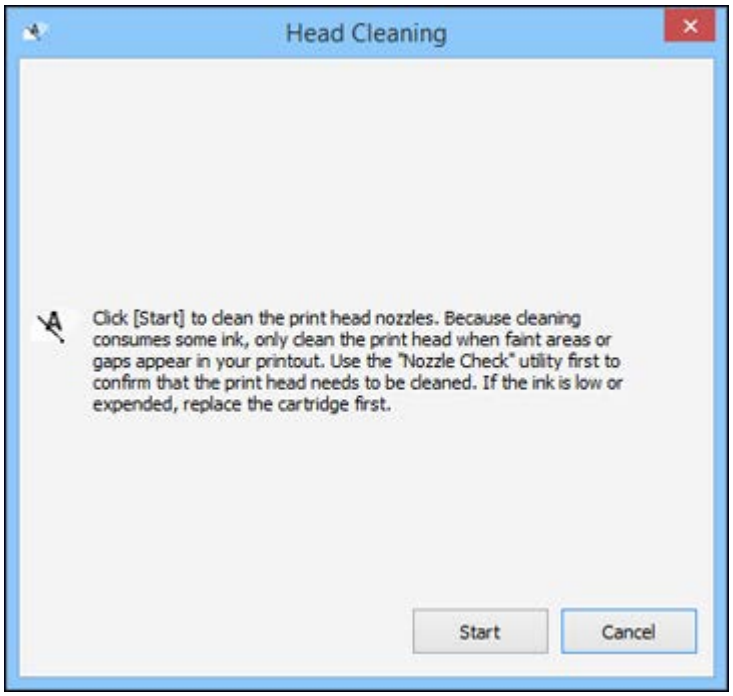


4. Click **Start** to begin the cleaning cycle.

   **Caution:** Never turn off the product or open the front cover during a cleaning cycle or you may not be able to print.

5. When the cleaning cycle is finished, you can check to see if the nozzles are clean; click **Print Nozzle Check Pattern** and click **Print**.
6. Check the printed pattern to see if there are gaps in the lines.

   **Print head is clean**

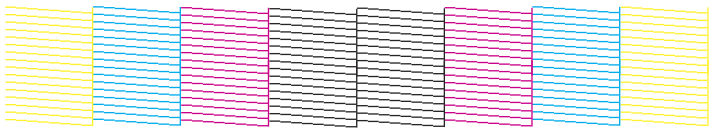

**Print head needs cleaning**

- If there are no gaps, click **Finish**.
- If there are gaps or the pattern is faint, click **Clean** to clean the print head again.

If you don't see any improvement after cleaning the print head up to 4 times, wait at least 6 hours without printing or longer if printing. Then try cleaning the print head again. If quality still does not improve, one of the ink cartridges may be old or damaged and needs to be replaced.

**Parent topic:** Print Head Cleaning

**Related tasks**

Cleaning the Print Head Using the Product Control Panel

**Related topics**

Loading Paper

# Print Head Alignment

If your printouts become grainy or blurry, you notice misalignment of vertical lines, or you see dark or light horizontal bands, you may need to align the print head.

**Note:** Banding may also occur if your print head nozzles need cleaning.

Aligning the Print Head Using the Product Control Panel
Aligning the Print Head Using a Computer Utility

**Parent topic:** Adjusting Print Quality

## Aligning the Print Head Using the Product Control Panel

You can align the print head using the control panel on your product.

1. Make sure there are no errors on the LCD screen.
2. Load a few sheets of plain paper in the product.
3. Press the ⌂ home button, if necessary.

4. Select **Setup**.
5. Select **Maintenance**.

   You see a screen like this:

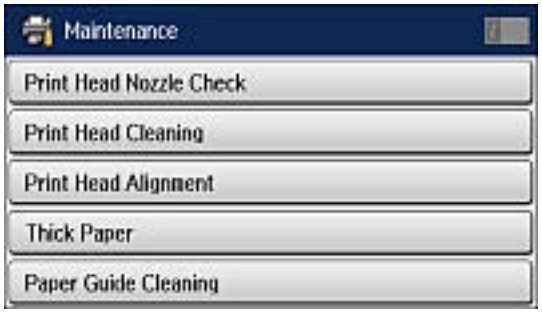


6. Select **Print Head Alignment**.
7. Do one of the following:
   - If vertical lines are misaligned, select **Ruled Line Alignment**.
   - If your printouts look blurry, select **Vertical Alignment**.
   - If you see horizontal bands at regular intervals, select **Horizontal Alignment**.
8. Follow the on-screen instructions to print an alignment sheet.

   **Note:** Do not cancel printing while you are printing head alignment patterns.

9. Check the printed patterns on the alignment sheet and do one of the following:
   - If you printed a ruled line alignment sheet, select the number representing the pattern with the least misaligned vertical line.

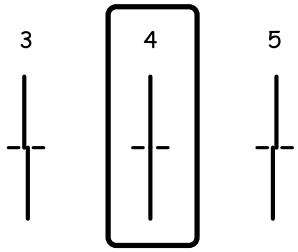

- If you printed a vertical alignment sheet, select the number representing the most solid printed pattern for each set on the LCD screen.

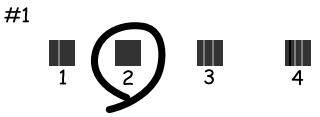


- If you printed a horizontal alignment sheet, select the number representing the pattern with the least amount of separation or overlap on the LCD screen.

**Parent topic:** Print Head Alignment

**Related topics**

Loading Paper

## Aligning the Print Head Using a Computer Utility

You can align the print head using a utility on your Windows or Mac computer.

1. Load a few sheets of plain paper in the product.
2. Do one of the following:
   - **Windows:** Access the Windows Desktop and right-click the product icon in the Windows taskbar.
   - **OS X 10.6/10.7/10.8/10.9**: In the Apple menu or the Dock, select **System Preferences**. Select **Print & Fax**, **Print & Scan**, or **Printers & Scanners**, select your product, and select **Options & Supplies**. Select **Utility** and select **Open Printer Utility**.
   - **OS X 10.5**: In the Apple menu or the Dock, select **System Preferences**. Select **Print & Fax**, select your product, and select **Open Print Queue**. Select **Utility**.
3. Select **Print Head Alignment**.

4. Click **Next**, then click **Print** to print an alignment sheet.

   **Note:** Do not cancel printing while you are printing a head alignment pattern.

   You see a window like this:

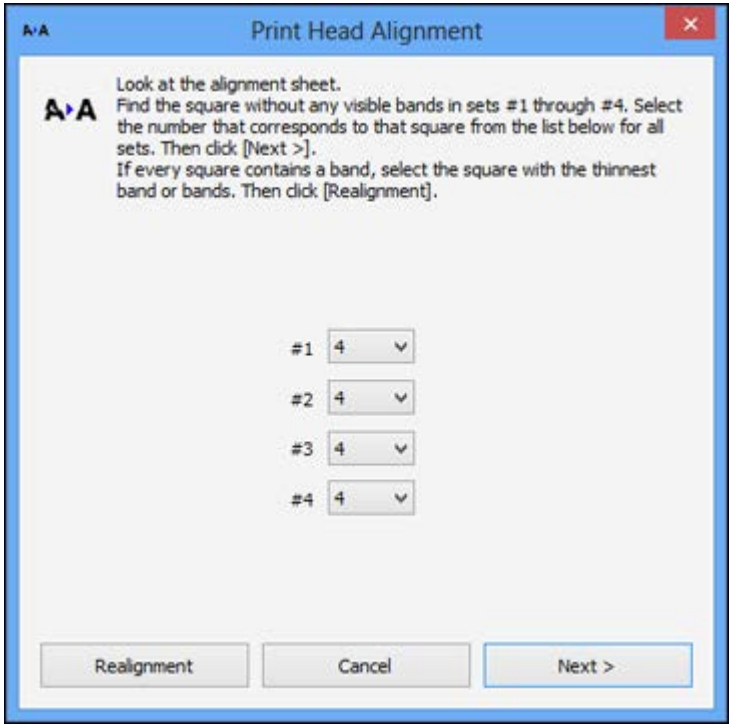


5. Check the printed pattern and follow the instructions on the screen to choose the number representing the best printed pattern for each set.

   **Vertical alignment**

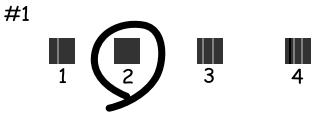

**Horizontal alignment**

- After choosing each pattern number, click **Next**.
- If no patterns are aligned in one or more of the sets, choose the closest one in each set and click **Realignment**. Then print another alignment sheet and check it.

**Note:** Click **Skip** (where available) if you want to skip a particular alignment sheet.

6. When you are done, click **Finish**.

**Parent topic:** Print Head Alignment

**Related topics**

Loading Paper

# Cleaning the Paper Guide

If you see ink on the back of a printout, you can clean the paper guide rollers to remove any excess ink. If paper does not feed correctly from the rear paper feed slot, you can use a cleaning sheet to clean the rollers.

1. Do one of the following:
   - If printouts are smeared or scuffed, load plain paper in the paper source that you want to clean in this size: A3 (11.7 × 16.5 inches [297 × 420 mm]).
   - If paper does not feed correctly from the rear paper feed slot, load the cleaning sheet that comes with genuine Epson paper in the rear paper feed slot.
2. Press the home button, if necessary.
3. Select **Setup**.
4. Select **Maintenance**.

You see a screen like this:

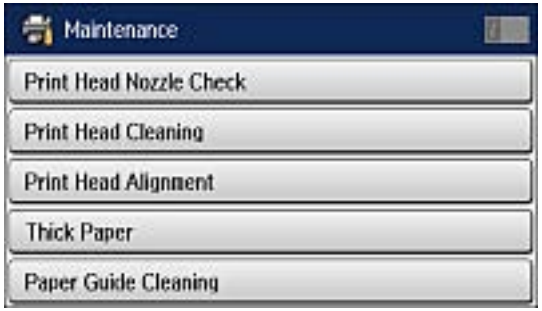


5. Scroll down and select **Paper Guide Cleaning**.
6. Select the paper source you want to clean.
7. Press the ◈ **Color** button.
8. If you are cleaning the paper guides, repeat as necessary until the paper comes out clean. If you are using a cleaning sheet, repeat these steps up to 3 times.

   **Note:** If the paper is not clean after cleaning several times, try cleaning the other paper sources.

**Parent topic:** Adjusting Print Quality

**Related topics**

Loading Paper

# Cleaning and Transporting Your Product

See these sections if you need to clean or transport your product.

Cleaning Your Product
Transporting Your Product

## Cleaning Your Product

To keep your product working at its best, you should clean it several times a year.

**Caution:** Do not use a hard brush, alcohol, or paint thinner to clean the product or you may damage it. Do not use oil or other lubricants inside the product or let water get inside it.

1. Turn off the product.
2. Unplug the power cord.
3. Disconnect any connected cables.
4. Remove all the paper from the product.

5. Clean the scanner glass and the glass area on the left with a soft, lint-free cloth (microfiber is recommended) moistened with a little glass cleaner.

   **Caution:** Do not spray glass cleaner directly on the glass and do not press the glass surface with any force.

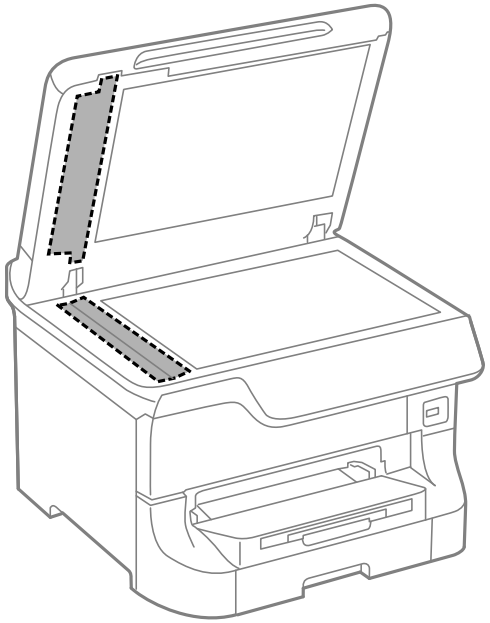

   **Note:** If lines appear on the printout or in scanned images, carefully clean the scanner glass on the left.

6. Raise the lever and open the ADF cover (F).

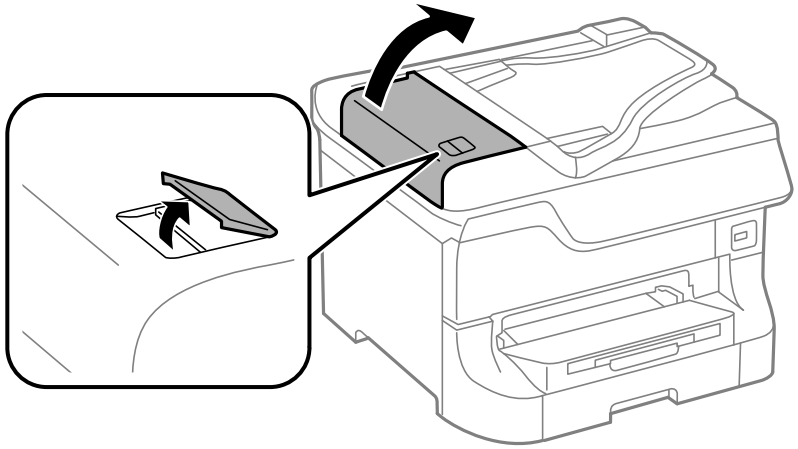

7. Use a soft, dry, lint-free cloth (microfiber is recommended) to clean the rollers and the interior of the ADF.

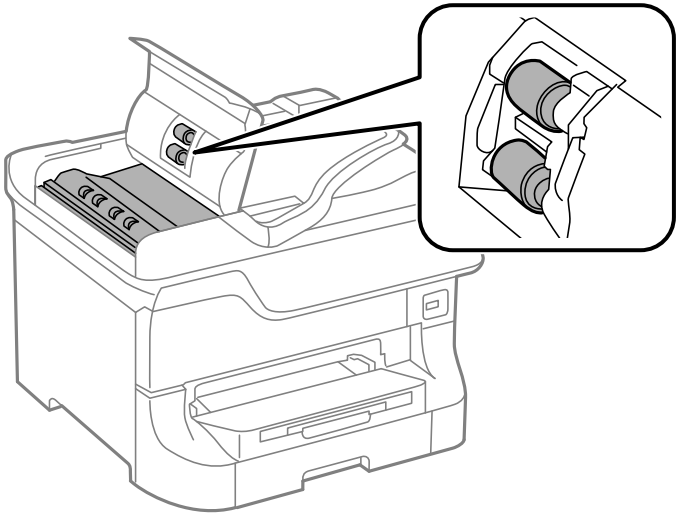

8. Clean the outer case and control panel with a soft, dry cloth. Do not use liquid or chemical cleansers.

**Parent topic:** Cleaning and Transporting Your Product

# Transporting Your Product

If you need to store your product or transport it, prepare it for transportation as described here.

**Caution:** During transportation and storage, follow these guidelines:

- Use two or more people to lift the product.
- When lifting the product, hold it as shown here. Holding other areas may cause the product to fall or cause you to pinch your fingers when placing the product down.

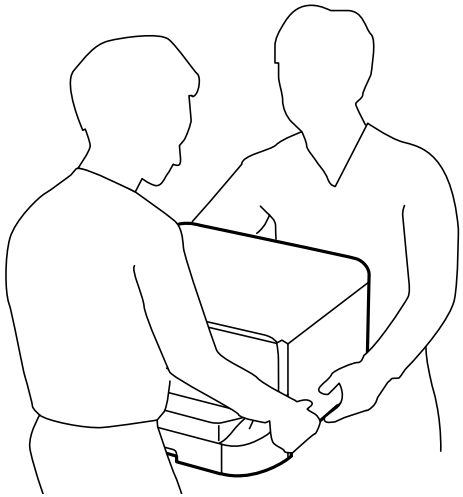

- Leave the maintenance box installed; otherwise ink may leak.
- When placing the product on the optional cabinet, lock the casters on the cabinet first.
- Avoid tilting the product, placing it vertically, or turning it upside down; otherwise ink may leak.
- Leave the ink cartridges installed. Removing the cartridges can dry out the print head and may prevent the product from printing.

1. Turn off the product.
2. Unplug the power cord.

3. Disconnect any connected cables.
4. Remove all the paper from the product.
5. Make sure there are no originals on the product.
6. Close the paper support and output tray.
7. If you transporting the product a short distance, remove the optional cabinet and paper cassettes (if they are installed) before lifting the product.

   **Note:** If the optional cabinet is installed, you can use the casters on the cabinet to roll the product instead of lifting it. Remove the cabinet stands and unlock the casters before moving the product. Do not roll the product over uneven or rough surfaces to avoid harsh impacts to the product.

8. If you are transporting the product over a long distance, place the product in its original packing materials, if possible, or use equivalent materials with cushioning around the product. Make sure the box adequately protects the product control panel.

Keep the product level during transportation. If print quality has declined when you print again, clean and align the print head.

**Parent topic:** Cleaning and Transporting Your Product

**Related concepts**

Print Head Cleaning
Print Head Alignment

**Related tasks**

Removing and Installing Ink Cartridges

# Solving Problems

Check these sections for solutions to problems you may have using your product.

Checking for Software Updates
Product Status Messages
Status Menu Error Codes
Running a Product Check
Resetting Control Panel Defaults
Solving Setup Problems
Solving Network Problems
Solving Copying Problems
Solving Paper Problems
Solving PostScript Printing Problems
Solving Problems Printing from a Computer
Solving Page Layout and Content Problems
Solving Print Quality Problems
Solving Scanning Problems
Solving Scanned Image Quality Problems
Solving Faxing Problems
Solving USB Flash Drive Problems
When to Uninstall Your Product Software
Where to Get Help

## Checking for Software Updates

Periodically, it's a good idea to check Epson's support website for free updates to your product software. Visit the driver download site at (U.S. downloads or Canadian downloads).

- **Windows**: Your printer software automatically checks for updates. You can also manually update the software by selecting **Software Update** here:
  - Accessing the Windows Desktop and right-clicking the product icon in the Windows taskbar
  - On the **Maintenance** tab in the printer settings window

You can also update the software by selecting **EPSON Software Updater** in the **EPSON** or **EPSON Software** program group, accessible by the **Start** button, or on the **Start** or **Apps** screens, depending on your version of Windows.

- **OS X**: You can manually update the software by opening the **Applications** > **Epson Software** folder and selecting **EPSON Software Updater**.

**Parent topic:** Solving Problems

## Product Status Messages

You can often diagnose problems with your product by checking the messages on its LCD screen. You can also check for errors by pressing the **i Status** button to display the Status Menu.

**Note:** If the screen is dark, press the screen to wake the product from sleep mode.

| LCD screen message | Condition/solution |
|---|---|
| Printer error. Turn the power off and on again. | Turn the product off and then back on again. If the error continues, check for and remove any paper jams or protective materials from the product. If the error is still displayed, contact Epson for support. |
| Too many paper cassette units are installed. Turn the power off and uninstall the extra units. | You can install up to three optional paper cassette units. Remove any extra units. |
| Cannot print because XX is out of order. You can print from another paper source. | Turn the product off and then back on again. Reinsert the indicated paper cassette. |
| Maintenance rollers on XX are nearing the end of their service life. | The maintenance rollers need to be replaced periodically for optimal performance. (Paper may not feed correctly from the paper cassette when the maintenance roller is near the end of its service life.) |
| Maintenance rollers on XX are at the end of their service life. | Contact your dealer to replace the maintenance rollers. Reset the maintenance roller counter and select the paper cassette for which you replaced the maintenance rollers. |
| You need to replace the following ink cartridge(s). | Replace the ink cartridge indicated on the LCD screen. |

| LCD screen message | Condition/solution |
|---|---|
| Communication error | Make sure the computer is connected to your product and the Epson Scan and Document Capture Pro software is installed correctly. |
| No dial tone detected. | Make sure the phone cable is connected correctly and the phone line works. If you connected the product to a PBX (Private Branch Exchange) phone line or Terminal Adapter, change the **Line Type** setting to **PBX**. If you still cannot send a fax, turn off the **Dial Tone Detection** setting. (Turning off the Dial Tone Detection setting may cause the product to drop the first digit of a fax number.) |
| Combination of IP address and subnet mask is invalid. | There is a problem with the network connection to your product. |
| Recovery mode | An error has occurred during firmware updating. Connect your product using a USB cable and try downloading the Firmware Update from the Epson support site. If you still need help, contact Epson for support. |

**Parent topic:** Solving Problems

**Related references**

Where to Get Help

**Related tasks**

Checking for Software Updates

Selecting the Line Type

Connecting a Telephone or Answering Machine

Removing and Installing Ink Cartridges

**Related topics**

Wi-Fi or Wired Networking

## Status Menu Error Codes

If a job does not complete successfully, you can check the error code. Press the **i Status** button, then select **Job History** and locate the incomplete job. Select the job to display the error code and additional information.

| Code | Condition/solution |
|---|---|
| 001 | The product was turned off by a power failure. |
| 101 | Memory is full. Reduce the size of the print job. |
| 102 | Collated printing has failed due to a lack of available memory. Clear fonts and macros from the product's memory using the **Clear Font and Macro** option from the Setup menu, reduce the size of the print job, or print one copy at a time. |
| 103 | Print quality was decreased due to a lack of available memory. If the quality of the printout is unacceptable, try simplifying the page by reducing the number of graphics or the number and size of the fonts. |
| 104 | Reverse printing has failed due to a lack of available memory. Clear fonts and macros from the product's memory using the **Clear Font and Macro** option from the Setup menu or reduce the data size of the print job. |
| 106 | Cannot print from the computer due to access control settings. Contact your printer administrator. |
| 107 | User authentication failed and the job has been canceled. Contact your printer administrator. |
| 108 | Confidential job data was deleted when the product was turned off. |
| 109 | The received fax was already deleted. |
| 110 | The job was printed 1-sided because the loaded paper does not support 2-sided printing. |
| 111 | Available memory is running low. Reduce the size of the print job. |
| 201 | The product's memory is full. You can send pages individually, or print received faxes and delete them to free up memory space. |
| 202 | The line was disconnected by the recipient's fax machine. Wait a moment, then try again. |
| 203 | The product cannot detect a dial tone.<br>Make sure the phone cable is connected correctly and the phone line works. If you connected the product to a PBX (Private Branch Exchange) phone line or Terminal Adapter, change the **Line Type** setting to **PBX**. If you still cannot send a fax, turn off the **Dial Tone Detection** setting. (Turning off the Dial Tone Detection setting may cause the product to drop the first digit of a fax number.) |
| 204 | The recipient's fax machine is busy. Wait a moment, then try again. |
| 205 | The recipient's fax machine does not answer. Wait a moment, then try again. |

| Code | Condition/solution |
|---|---|
| 206 | The phone cable is incorrectly connected to the product's **LINE** and **EXT** ports. Connect the phone cable correctly. |
| 207 | The phone cable is not connected. Connect the phone cable. |
| 208 | The fax could not be sent to some of the specified recipients.<br>Print a fax log to check which recipients failed to receive the fax. If the **Save Failure Data** setting is turned on, you can resend a fax from Job Monitor in the Status Menu. |
| 301<br>401 | There is not enough storage space available to save the data in the external memory device. Clear space on the device or use a different device. |
| 302<br>402 | The external memory device is write-protected. Disable write protection. |
| 303 | No folder is available for saving the scanned file. Create a folder or use a different memory device. |
| 304<br>404 | The external memory device has been removed. Reinsert the device. |
| 305<br>405 | An error occurred while saving data to an external memory device. Reinsert the memory device or use a different device. |
| 306 | The product's memory is full. Wait until current jobs are finished processing. |
| 311<br>321<br>411<br>421 | A DNS error has occurred. Check the DNS settings for the server, computer, or access point. DNS settings for the server can be checked from the DNS Server option in the Setup menu. |
| 312<br>412 | An authentication error has occurred. Check the Server Settings from the Setup menu. |
| 313<br>413 | A communication error has occurred. Check the Server Settings or network connection by running a connection check. If you selected **Off** as the authentication method, make sure to select **None** for the email server authentication method. |
| 314 | The data size exceeds the maximum size for the attached files. Increase the **Attached File Max Size** setting in the scan settings or lower the file size of the scanned image. |

| Code | Condition/solution |
|---|---|
| 315<br>327 | The memory is full. Retry after other ongoing jobs have finished. |
| 322 | An authentication error occurred. Check the **Location** settings. |
| 323 | A communication error has occurred. Check the **Location** settings or the network connection. |
| 324 | A file with the same name already exists in the specified folder. Delete the duplicate file or change the file name prefix in **File Settings**. |
| 325 | There is not enough storage space available in the specified folder. Increase the storage space in the specified folder, delete unnecessary files, or lower the file size of the scanned image. |
| 328 | The destination was wrong or the destination does not exist. Check the **Location** settings. |
| 331 | A communication error occurred while acquiring the destination list. Make sure the product is connected to the network correctly. |
| 332 | There is not enough space available for saving the scanned files in the specified folder. Delete unnecessary files from the specified folder. |
| 333 | The destination could not be found because the destination information was uploaded to the server before sending the scanned data. Select the destination again. |
| 334 | An error occurred while sending the scanned data. |
| 341 | A communication error has occurred. Make sure the product is connected to the computer or network correctly. Make sure you have installed Document Capture Pro or Document Capture. Make sure the Event Manager program is not being blocked by your firewall or security software. |
| 422 | An authentication error has occurred. Make sure the settings are correct for the folder selected in the **Where to Forward** setting in the **Setup** menu. |
| 423 | A communication error has occurred. It is also possible that a file with the same name is open or the file is a read-only file.<br>Check the network connection, make sure the settings are correct for the folder selected in the **Where to Forward** setting in the **Setup** menu, close the duplicate file, or disable read-only protection. |

| Code | Condition/solution |
|---|---|
| 425 | There is not enough storage space available in the forwarding destination folder. Increase the storage space in the destination folder. |
| 428 | The destination was wrong or the destination does not exist. Make sure the settings are correct for the folder selected in the **Where to Forward** setting in the **Setup** menu. |

**Parent topic:** Solving Problems

**Related tasks**

Connecting a Telephone or Answering Machine
Viewing a Fax on the LCD Screen
Selecting the Line Type
Selecting Advanced Fax Settings
Setting User Feature Restrictions (Access Control)
Entering a User ID and Password for Printing

**Related topics**

Sending Faxes
Wi-Fi or Wired Networking

## Running a Product Check

Running a product check helps you determine if your product is operating properly.

1. Disconnect any interface cables connected to your product.
2. Load plain paper in the product.
3. Press the home button, if necessary.
4. Select **Setup**.
5. Select **Maintenance**.

You see a screen like this:

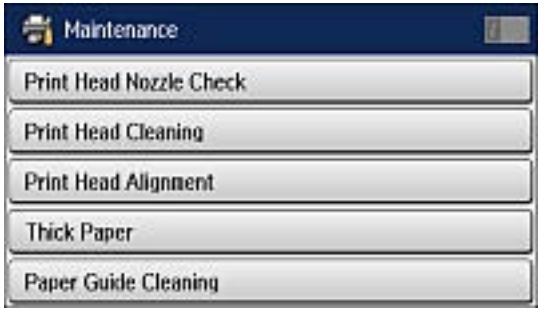


6. Select **Print Head Nozzle Check**.

   You see a screen like this:

7. Press the ◇ **Color** button.

   The nozzle pattern prints.

8. Do one of the following, depending on the results of the product check:
   - If the page prints and the nozzle check pattern is complete, the product is operating properly. Any operation problem you may have could be caused by your computer, cable, software, or selected settings. Check the other solutions in this book or try uninstalling and reinstalling your printer software.
   - If the page prints but the nozzle check pattern has gaps, clean or align the print head.
   - If the page does not print, the product may have a problem. Check the other solutions in this manual. If they do not work, contact Epson.

**Parent topic:** Solving Problems

**Related concepts**

Print Head Cleaning
Print Head Alignment
When to Uninstall Your Product Software

**Related references**

Where to Get Help

# Resetting Control Panel Defaults

If you have a problem with settings on the product control panel, you can reset them to their factory defaults. You can choose which settings to reset or reset them all.

**Note:** This setting can be locked by an administrator. If you cannot access or change this setting, contact your administrator for assistance.

1. Press the home button, if necessary.
2. Select **Setup**.
3. Scroll down and select **System Administration**. Enter the administrator password, if necessary.
4. Scroll down and select **Restore Default Settings**.

   You see a screen like this:

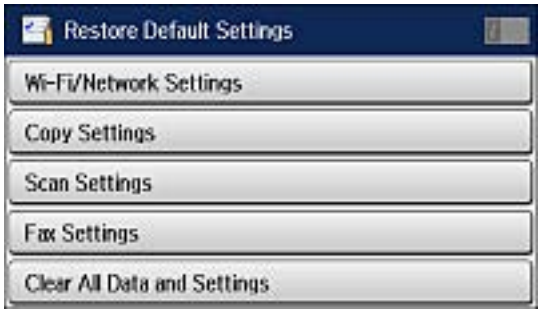


5. Select one of these options:
   - **Wi-Fi/Network Settings**: Resets all network settings.

- **Copy Settings**: Resets all settings for copying.
- **Scan Settings**: Resets all settings for scanning.
- **Fax Settings**: Resets all settings for faxing.
- **Clear All Data and Settings**: Resets all control panel settings including the contacts list.

You see a confirmation screen.

6. Select **Yes** to reset the selected settings. (Select **No** if you want to cancel the operation.)

**Parent topic:** Solving Problems

# Solving Setup Problems

Check these sections if you have problems while setting up your product.

Product Does Not Turn On or Off
Noise After Ink Installation
Software Installation Problems

**Parent topic:** Solving Problems

## Product Does Not Turn On or Off

If you cannot turn the product on or off, try these solutions:

- If you cannot turn on your product, make sure the power cord is securely connected and hold down the power button a little longer.
- If you cannot turn off your product, hold the power button down a little longer. If you still cannot turn off your product, unplug the power cord. To prevent the print head from drying out, plug the power cord back in, then turn your product on and off again using the power button.

**Parent topic:** Solving Setup Problems

## Noise After Ink Installation

If you hear noises from your product after installing ink, check the following:

- The first time you install the ink cartridge, the product must prime its print head. Wait until priming finishes before you turn off the product, or it may prime improperly and use excess ink the next time you turn it on.
- If the product's print head stops moving or making noise, and the charging process has not finished after approximately 5 minutes, turn off your product. Turn it back on and check to see if charging is still in progress. If it is still in progress, contact Epson for help.

**Parent topic:** Solving Setup Problems

## Software Installation Problems

If you have problems while installing your product software, try these solutions:

- Make sure your product is turned on and any necessary cables are securely connected at both ends. If you still have problems installing software, disconnect the cable and carefully follow the instructions on the *Start Here* sheet. Also make sure your system meets the requirements for your operating system.
- Close any other programs, including screen savers and virus protection software, and install your product software again.
- In Windows, make sure your product is selected as the default printer and the correct port is shown in the printer properties.
- If you see any error message or your software does not install correctly in Windows, you may not have software installation privileges. Contact your System Administrator.

**Parent topic:** Solving Setup Problems

**Related concepts**

When to Uninstall Your Product Software

**Related references**

Windows System Requirements

OS X System Requirements

# Solving Network Problems

Check these solutions if you have problems setting up or using your product on a network.

**Note:** Breakdown or repair of this product may cause loss of fax and network data and settings. Epson is not responsible for backing up or recovering data and settings during or after the warranty period. We recommend that you make your own backup or print out your fax and network data and settings.

Product Cannot Connect to a Wireless Router or Access Point

Network Software Cannot Find Product on a Network

Product Does Not Appear in OS X Printer Window

Cannot Print Over a Network

Cannot Scan Over a Network

**Parent topic:** Solving Problems

## Product Cannot Connect to a Wireless Router or Access Point

If your product has trouble finding or connecting to a wireless router or access point, try these solutions:

- If you are connecting the product via Wi-Fi Protected Setup (WPS) and the Wi-Fi icon on your product's LCD is not lit or does not appear, make sure you select one of the WPS options from the product control panel within 2 minutes of pressing the WPS button on your router.
- Make sure to place your product within contact range of your 2.4GHz router or access point. Avoid placing your product near a microwave oven, 2.4 GHz cordless phone, or large metal object, such as a filing cabinet.

  **Note:** If you are using a 5 GHz wireless router, set the router to operate in dual band (2.4 GHz and 5 GHz) mode. See your router documentation for instructions.

- Verify that your router or access point is operating correctly by connecting to it from your computer or another device.
- You may need to disable the firewall and any anti-virus software on your wireless router or access point.
- Check to see if access restrictions, such as MAC address filtering, are set on the router or access point. If access restrictions are set, add your product's MAC address to your router's address list. To obtain your product's MAC address, print a network status sheet. Then follow the instructions in your router or access point documentation to add the address to the list.
- If your router or access point does not broadcast its network name (SSID), follow the instructions that came with your product to enter your wireless network name manually.
- Make sure you are connected to a 2.4 GHz band and not 5 GHz.
- If your router or access point has security enabled, determine the kind of security it is using and any required password or passphrase for connection. Then make sure to enter the exact WEP key or WPA passphrase correctly.
- Check if your computer is restricting the available wireless channels. If so, verify that your wireless access point is using one of the usable channels and change to a usable channel, if necessary.
- If you are using a Wi-Fi Direct connection that suddenly disconnects, the Wi-Fi direct password on your device may have been changed. If necessary, delete the existing **DIRECT-xxxxxxxx** connection settings from your device and enter a new password. See your device documentation for instructions.
- If you connected your product to a Windows computer using Wi-Fi Direct and it automatically selected Access Point Mode, you may have trouble accessing a low-priority Internet connection. Check the network connection or adapter settings in the Windows Control Panel and set the **Internet metric** setting to **100** for your version of the Internet Protocol.

**Parent topic:** Solving Network Problems

**Related concepts**

Wi-Fi Direct Mode Setup

**Related tasks**

Selecting Wireless Network Settings From the Control Panel

Printing a Network Status Sheet

**Related topics**

Wi-Fi or Wired Networking

## Network Software Cannot Find Product on a Network

If EpsonNet Setup cannot find your product on a network, try these solutions:

- Make sure your product is turned on and connected to your network. Verify connection using your product control panel.
- Check if your network name (SSID) contains non-ASCII characters. Your product cannot display non-ASCII characters.
- Make sure your product is not connected to a guest network.
- If necessary, reinstall your product software and try running EpsonNet Setup again:
  1. Reset your product's network settings to their factory defaults.
  2. Windows only: uninstall your product software.
  3. Initialize your router following the instructions in your router documentation.

     **Note:** If you are reading these instructions online, you will lose your Internet connection when you initialize your router, so note the next step before initializing it.

  4. Download your product software from the Epson website using the instructions on the *Start Here* sheet.
- If you have replaced your router, reinstall your product software to connect to the new router.

  **Note:** If you are using a 5 GHz wireless router, set the router to operate in dual band (2.4 GHz and 5 GHz) mode. See your router documentation for instructions.

**Parent topic:** Solving Network Problems

**Related concepts**

When to Uninstall Your Product Software

**Related topics**

Wi-Fi or Wired Networking

## Product Does Not Appear in OS X Printer Window

If your product does not appear in the OS X printer window, try these solutions:

- Turn your product off, wait 30 seconds, then turn it back on again.
- If you are connecting the product via Wi-Fi Protected Setup (WPS) and the Wi-Fi icon on your product's LCD is not lit, make sure you select one of the WPS options from the product control panel within 2 minutes of pressing the WPS button on your router.
- If you are connecting the product wirelessly via EpsonNet Setup and the Wi-Fi icon does not appear lit on your LCD screen, make sure your product software was installed correctly. If necessary, reinstall your software.

**Note:** If you are using a 5 GHz wireless router, set the router to operate in dual band (2.4 GHz and 5 GHz) mode. See your router documentation for instructions.

**Parent topic:** Solving Network Problems

**Related concepts**

When to Uninstall Your Product Software

## Cannot Print Over a Network

If you cannot print over a network, try these solutions:

- Make sure that your product is turned on.
- Make sure you install your product's network software as described in your product documentation.
- Print a network status sheet and verify that the network settings are correct. If the network status is **Disconnected**, check any cable connections and turn your product off and then on again.
- If you are using TCP/IP, make sure the product's IP address is set correctly for your network. If your network does not assign IP addresses using DHCP, set the IP address manually.
- Make sure your computer and product are both using the same wireless network.

- If network printing is slow, print a network status sheet and check the signal strength. If it is poor, place your product closer to your router or access point. Avoid placing your product near a microwave oven, 2.4 GHz cordless phone, or large metal object, such as a filing cabinet.

  **Note:** If you are using a 5 GHz wireless router, set the router to operate in dual band (2.4 GHz and 5 GHz) mode. See your router documentation for instructions.

- Check to see if your wireless router or access point has an enabled Privacy Separator function that is preventing printing from a device over the network. See your router or access point documentation for instructions on disabling the Privacy Separator function.
- If you are connecting the product via Wi-Fi Protected Setup (WPS) and the Wi-Fi icon on your product's LCD is not lit, make sure you select one of the WPS options from the product control panel within 2 minutes of pressing the WPS button on your router.
- Check your wired LAN router or access point to see if the LED for the port to which your product is connected is on or flashing. If the link LED is off, try the following:
  - Make sure the Ethernet cable is securely connected to your product and to your router, access point, switch, or hub.
  - Try connecting your product to a different port or a different router, access point, switch, or hub.
  - Try connecting with a different Ethernet cable.
  - Try printing to your product from another computer on the network.
- If you are connecting the product via EpsonNet Setup and the Wi-Fi icon does not appear lit on the LCD, make sure your product software was installed correctly. If necessary, reinstall your software.

**Parent topic:** Solving Network Problems

**Related concepts**

When to Uninstall Your Product Software

**Related tasks**

Printing a Network Status Sheet

**Related topics**

Wi-Fi or Wired Networking

## Cannot Scan Over a Network

If you cannot start Epson Scan for scanning over a network, try these solutions:

- If you cannot scan from your product control panel, make sure you restarted your computer after installing the product software. Make sure the Event Manager program is not being blocked by your firewall or security software.

  **Note:** If you are using a 5 GHz wireless router, set the router to operate in dual band (2.4 GHz and 5 GHz) mode. See your router documentation for instructions.

- If you are scanning a large original at a high resolution, a network communication error may occur. Try scanning again at a lower resolution.
- If network communication was interrupted while starting Epson Scan, exit Epson Scan, wait a few seconds, and restart it. If Epson Scan cannot restart, turn off your product, turn it back on, and try restarting Epson Scan again.
- Check the connection setting and test the connection using Epson Scan Settings:

  **Windows 8.x**: Navigate to the **Apps** screen and select **EPSON Scan Settings**. Make sure the **Connection** setting is set to **Network**, then click the **Test** button.

  **Windows (other versions)**: Click or **Start** > **All Programs** or **Programs** > **EPSON** > **EPSON Scan** > **EPSON Scan Settings**. Make sure the **Connection** setting is set to **Network**, then click the **Test** button.

  **OS X**: Open the **Applications** folder, click **Epson Software**, and click **EPSON Scan Settings**. Make sure the **Connection** setting is set to **Network**, then click the **Test** button.
- Make sure the option selected as the **Timeout Setting** in the Epson Scan Settings program is long enough to complete scanning over a network.
- You may need to disable the firewall and any anti-virus software on your wireless router or access point.

**Note:** With OS X, in addition to scanning with Image Capture, you can download and install Epson Scan scanning software. Epson Scan provides additional image adjustment and photo correction features for enhancing scanned images, and provides an interface for TWAIN-compliant OCR scanning software. To download Epson Scan, visit Epson's driver download site (U.S. downloads or Canadian downloads).

**Parent topic:** Solving Network Problems

**Related tasks**

Starting a Scan Using the Product Control Panel

Starting a Scan Using the Epson Scan Icon
Entering a User ID and Password for Printing

# Solving Copying Problems

Check these solutions if you have problems copying with your product.

Product Makes Noise, But Nothing Copies
Product Makes Noise When It Sits for a While
Originals Do Not Feed From the Automatic Document Feeder

**Parent topic:** Solving Problems

## Product Makes Noise, But Nothing Copies

If your product makes a noise, but nothing copies, try these solutions:

- Run a nozzle check to see if any of the print head nozzles are clogged. Then clean the print head, if necessary.
- If the nozzle check page does not print, but the product's power is on, make sure your product software is installed correctly.
- Make sure your product is level (not tilted).

**Parent topic:** Solving Copying Problems

**Related concepts**

Print Head Nozzle Check
Print Head Cleaning

## Product Makes Noise When It Sits for a While

Your product is performing routine maintenance. This is normal.

**Parent topic:** Solving Copying Problems

## Originals Do Not Feed From the Automatic Document Feeder

If your originals do not feed when placed in the ADF, try these solutions:

- Make sure the ADF icon appears on the LCD screen. If not, reload the originals.
- Make sure the size, weight, and number of your originals are supported by the ADF.
- Make sure the originals are loaded correctly.

- Try cleaning the inside of the ADF.

**Parent topic:** Solving Copying Problems

**Related references**

Document Jams in the Automatic Document Feeder (F)

Automatic Document Feeder (ADF) Specifications

**Related tasks**

Placing Originals in the Automatic Document Feeder

Cleaning Your Product

# Solving Paper Problems

Check these sections if you have problems using paper with your product.

Paper Feeding Problems

Paper Jam Problems in the Front Cover (A)

Paper Jam Problems in the Rear Paper Feed Slot (B1)

Paper Jam Problems in the Front Paper Feed Slot (B2)

Paper Jam Problems in the Cassette (C1/C2/C3/C4)

Paper Jam Problems in the Rear Cover 1 (D1)

Paper Jam Problems in the Rear Cover (E) of the Optional Paper Cassette Unit

Document Jams in the Automatic Document Feeder (F)

Paper Ejection Problems

**Parent topic:** Solving Problems

## Paper Feeding Problems

If you have problems feeding paper, try these solutions:

- If paper does not feed for printing, remove it from the rear feed slot or cassette. Reload it, then adjust the edge guides. Make sure the paper stack is not above the tab on the edge guides inside the cassette or rear feed slot.
- Be sure to insert the paper cassette all the way into your product.
- If multiple pages feed at once, remove the paper, fan the edges to separate the sheets, and reload it.
- Do not load more than the recommended number of sheets.
- Make sure your paper meets the specifications for your product.

- If paper jams when you print on both sides of the paper, try loading fewer sheets.
- Make sure the paper size and paper type settings are correct for the paper source.
- Load and eject paper without printing to clean the paper path.
- If paper does not feed correctly after replacing the maintenance rollers, make sure you installed the maintenance rollers correctly.
- If you installed an optional paper cassette unit, be sure to enable the cassette unit in the printing software.
- If your product pauses during printing, make sure the front cover is closed.
- The maintenance rollers may be at the end of their service life. Check the maintenance roller status and replace them if necessary.
- For best results, follow these guidelines:
  - Use new, smooth, high-quality paper that is not curled, creased, old, too thin, or too thick.
  - Load paper in the cassette printable side down.
  - Do not load binder paper with holes in the cassette.
  - Follow any special loading instructions that came with the paper.

**Parent topic:** Solving Paper Problems

**Related references**

Paper Jam Problems in the Front Cover (A)
Paper Jam Problems in the Rear Paper Feed Slot (B1)
Paper Jam Problems in the Front Paper Feed Slot (B2)
Paper Jam Problems in the Cassette (C1/C2/C3/C4)
Paper Jam Problems in the Rear Cover 1 (D1)
Paper Jam Problems in the Rear Cover (E) of the Optional Paper Cassette Unit
Document Jams in the Automatic Document Feeder (F)
Paper Loading Capacity
Paper Specifications

**Related tasks**

Cleaning the Paper Guide

**Related topics**

Loading Paper

## Paper Jam Problems in the Front Cover (A)

If paper has jammed in the front cover, follow the steps here to clear the jam.

1. Cancel the print job, if necessary.
2. Open the front cover.

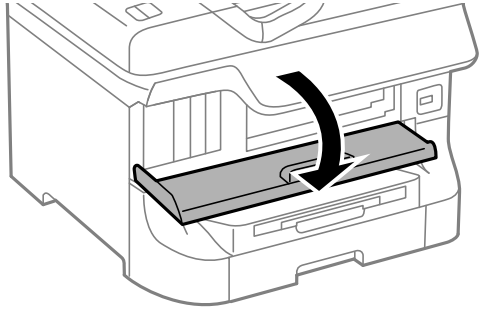

3. Remove any paper inside, including torn pieces.

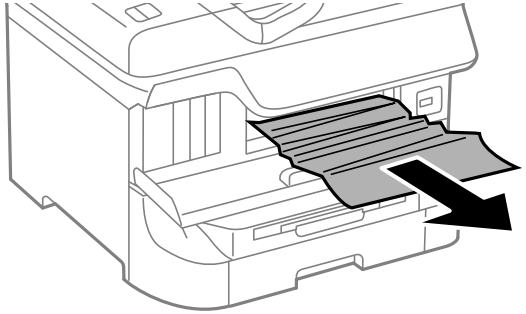

**Caution:** Be careful to not touch any parts inside the product to prevent damage to it.

4. Close the front cover.

**Note:** If any torn pieces of paper remain in the product, select **Setup** > **Maintenance** > **Remove Paper** after clearing the paper jam error.

5. Follow the prompts on the LCD screen to clear any error messages. If you still see a paper jam message, check the other paper jam solutions.

**Parent topic:** Solving Paper Problems

**Related references**

Paper Jam Problems in the Rear Paper Feed Slot (B1)
Paper Jam Problems in the Front Paper Feed Slot (B2)
Paper Jam Problems in the Cassette (C1/C2/C3/C4)
Paper Jam Problems in the Rear Cover 1 (D1)
Paper Jam Problems in the Rear Cover (E) of the Optional Paper Cassette Unit
Document Jams in the Automatic Document Feeder (F)

## Paper Jam Problems in the Rear Paper Feed Slot (B1)

If paper has jammed in the rear paper feed slot, carefully remove the paper.

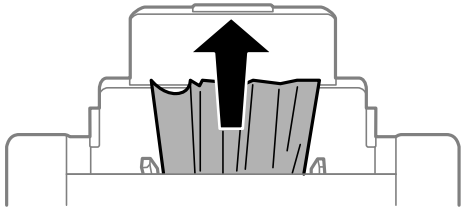

**Parent topic:** Solving Paper Problems

**Related references**

Paper Jam Problems in the Front Cover (A)
Paper Jam Problems in the Front Paper Feed Slot (B2)
Paper Jam Problems in the Cassette (C1/C2/C3/C4)
Paper Jam Problems in the Rear Cover 1 (D1)
Paper Jam Problems in the Rear Cover (E) of the Optional Paper Cassette Unit
Document Jams in the Automatic Document Feeder (F)

## Paper Jam Problems in the Front Paper Feed Slot (B2)

If paper has jammed in the front paper feed slot, follow the steps here to clear the jam.

1. Cancel the print job, if necessary.

2. Close the output tray.
3. Remove the output tray and pull out the paper cassette.

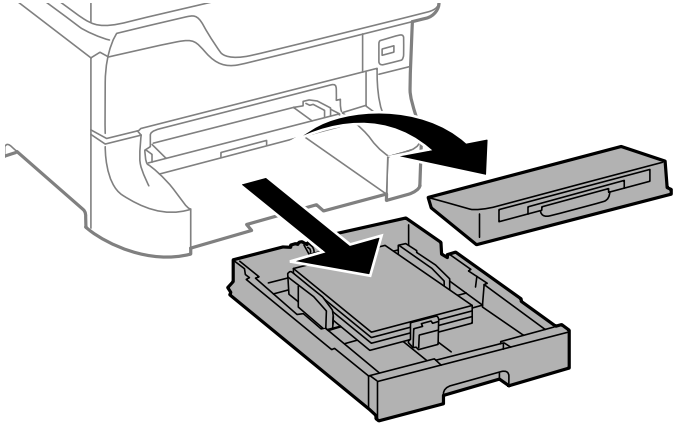

4. Pull the lever to lower the cover.

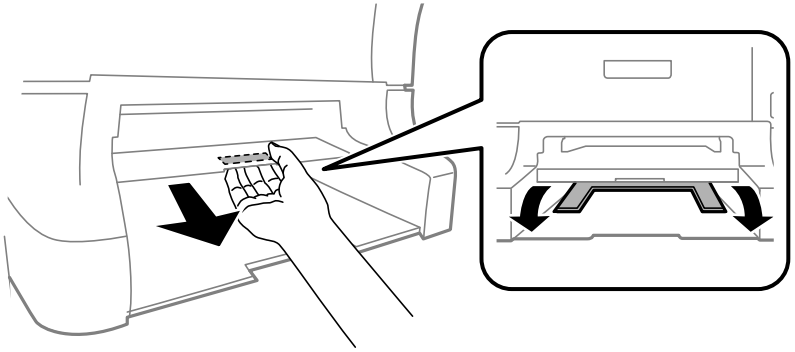

5. Carefully remove any paper jammed inside the product.

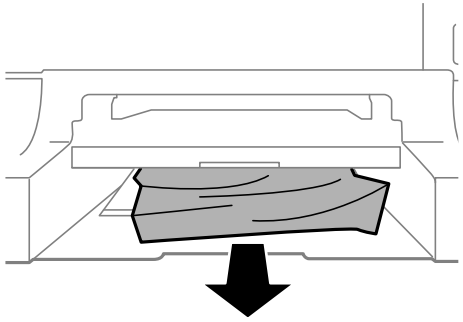

6. Raise the cover.

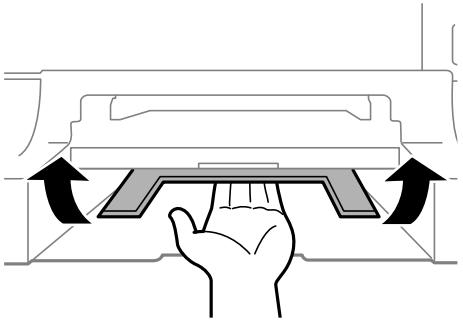

7. Reattach the output tray and insert the paper cassette.
8. Follow the prompts on the LCD screen to clear any error messages. If you still see a paper jam message, check the other paper jam solutions.

**Parent topic:** Solving Paper Problems

**Related references**

Paper Jam Problems in the Front Cover (A)
Paper Jam Problems in the Rear Paper Feed Slot (B1)
Paper Jam Problems in the Cassette (C1/C2/C3/C4)
Paper Jam Problems in the Rear Cover 1 (D1)
Paper Jam Problems in the Rear Cover (E) of the Optional Paper Cassette Unit

Document Jams in the Automatic Document Feeder (F)

## Paper Jam Problems in the Cassette (C1/C2/C3/C4)

If paper has jammed in the cassette, follow the steps here to clear the jam.

**Note:** If the optional paper cassette units are installed, do not remove more than one paper cassette at a time.

1. Cancel the print job, if necessary.
2. Pull out the paper cassette.

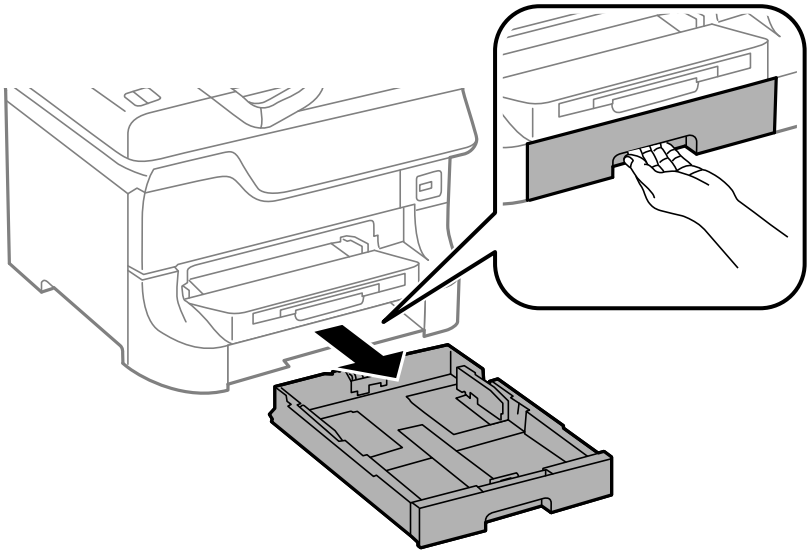

3. Carefully remove any paper jammed inside the product.

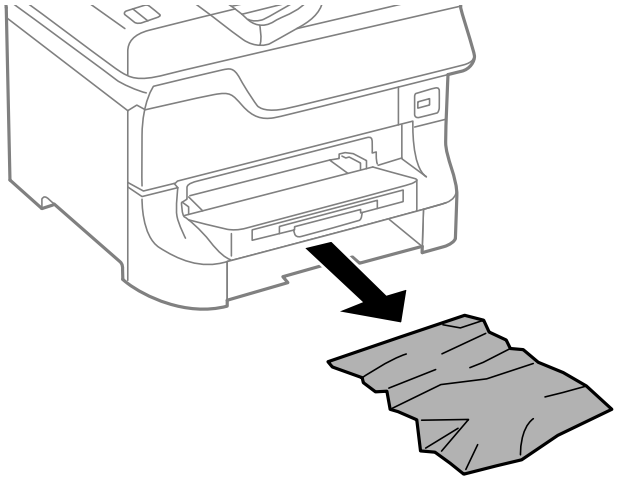

4. Carefully follow all paper loading instructions and reload the paper.
5. Keep the cassette flat as you gently insert it.
6. Follow the prompts on the LCD screen to clear any error messages. If you still see a paper jam message, check the other paper jam solutions.

**Parent topic:** Solving Paper Problems

**Related references**

Paper Jam Problems in the Front Cover (A)
Paper Jam Problems in the Rear Paper Feed Slot (B1)
Paper Jam Problems in the Front Paper Feed Slot (B2)
Paper Jam Problems in the Rear Cover 1 (D1)
Paper Jam Problems in the Rear Cover (E) of the Optional Paper Cassette Unit
Document Jams in the Automatic Document Feeder (F)

## Paper Jam Problems in the Rear Cover 1 (D1)

If paper has jammed in the rear cover 1, follow the steps here to clear the jam.

1. Cancel the print job, if necessary.

2. Open rear cover 1 (D1).

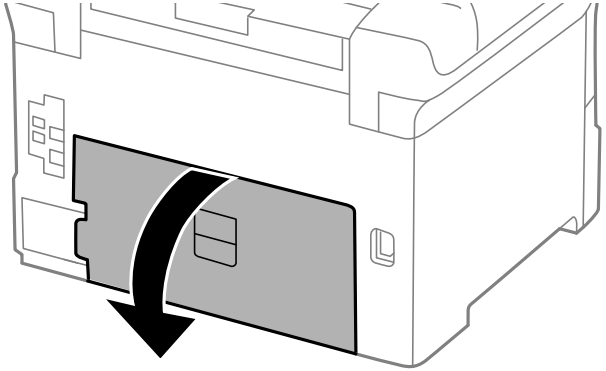

3. Carefully remove any jammed paper.

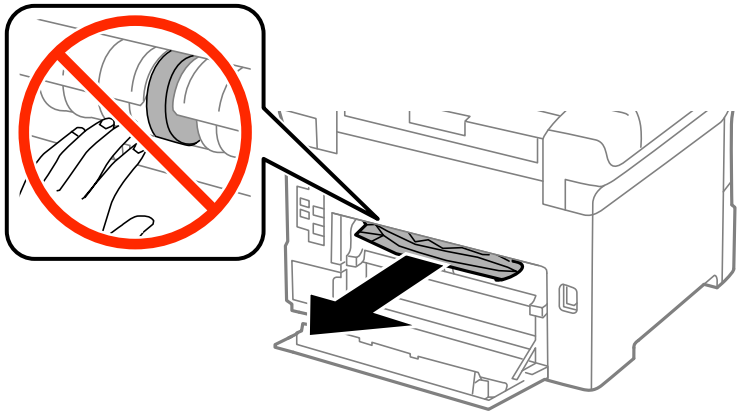

4. Pull out rear cover 2 (D2).

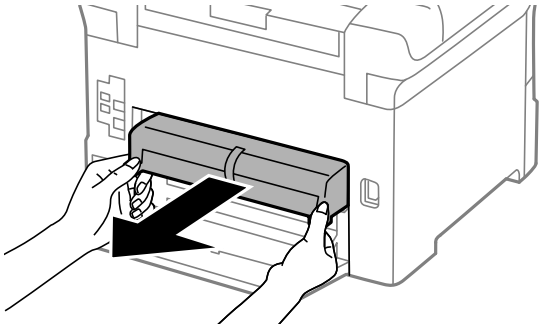

5. Remove any jammed paper from the duplexer.

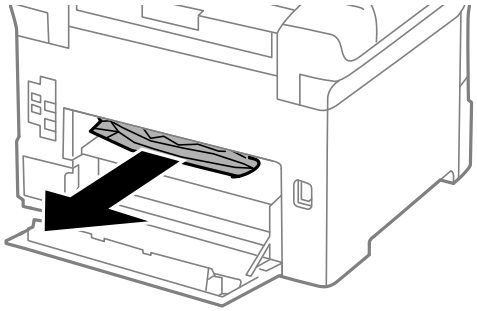

6. Insert rear cover 2 (D2).
7. Close rear cover 1 (D1).
8. Follow the prompts on the LCD screen to clear any error messages. If you still see a paper jam message, check the other paper jam solutions.

**Parent topic:** Solving Paper Problems

**Related references**

Paper Jam Problems in the Front Cover (A)
Paper Jam Problems in the Rear Paper Feed Slot (B1)
Paper Jam Problems in the Front Paper Feed Slot (B2)

Paper Jam Problems in the Cassette (C1/C2/C3/C4)
Paper Jam Problems in the Rear Cover (E) of the Optional Paper Cassette Unit
Document Jams in the Automatic Document Feeder (F)

## Paper Jam Problems in the Rear Cover (E) of the Optional Paper Cassette Unit

If paper has jammed in any of the optional paper cassettes, follow the steps here to clear the jam.

1. Cancel the print job, if necessary.
2. Open rear cover (E) on the optional paper cassette unit with the jammed paper.

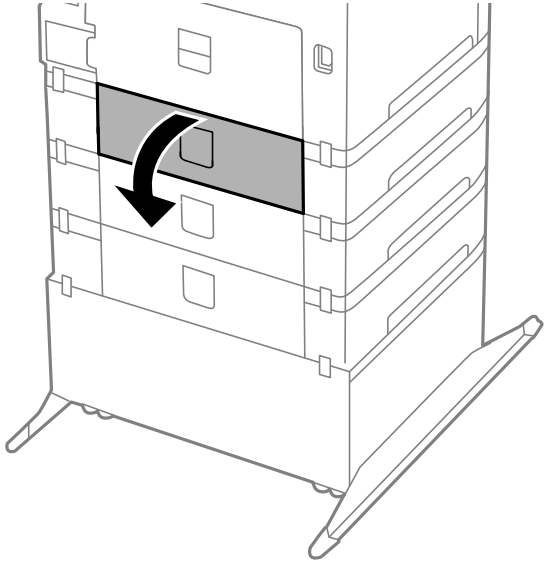

3. Carefully remove any paper jammed inside.

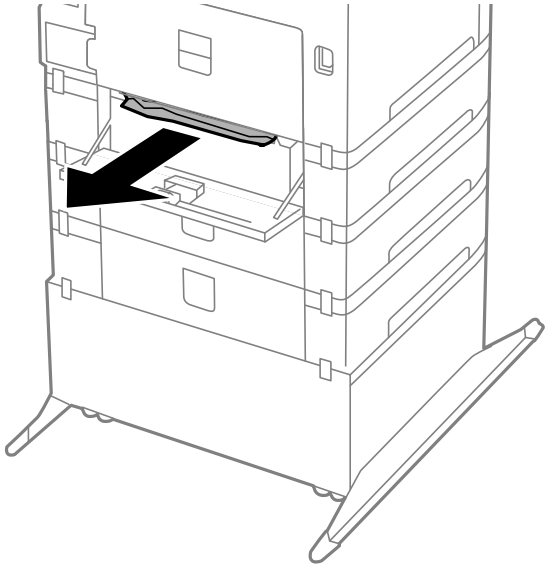

4. Close rear cover (E).
5. Follow the prompts on the LCD screen to clear any error messages. If you still see a paper jam message, check the other paper jam solutions.

**Parent topic:** Solving Paper Problems

**Related references**

Paper Jam Problems in the Front Cover (A)
Paper Jam Problems in the Rear Paper Feed Slot (B1)
Paper Jam Problems in the Front Paper Feed Slot (B2)
Paper Jam Problems in the Cassette (C1/C2/C3/C4)
Paper Jam Problems in the Rear Cover 1 (D1)
Document Jams in the Automatic Document Feeder (F)

## Document Jams in the Automatic Document Feeder (F)

If you have problems with document jams in the automatic document feeder (ADF), follow the steps here to clear the jam.

1. Cancel the print job, if necessary.
2. Remove your originals from the ADF.
3. Raise the lever and open the ADF cover.

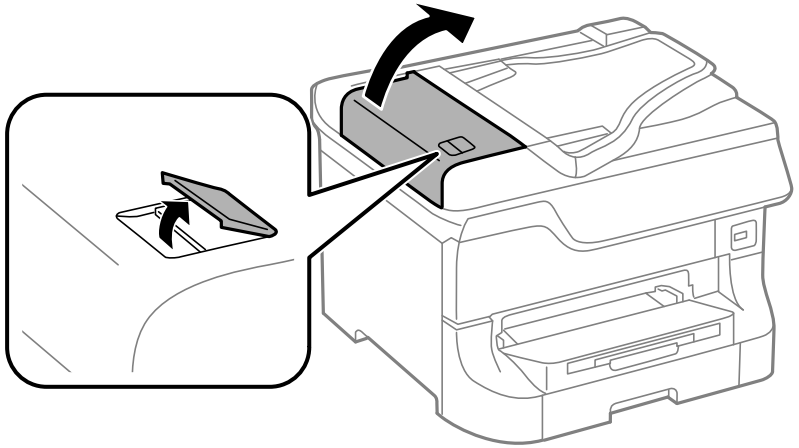

4. Carefully remove any jammed pages.

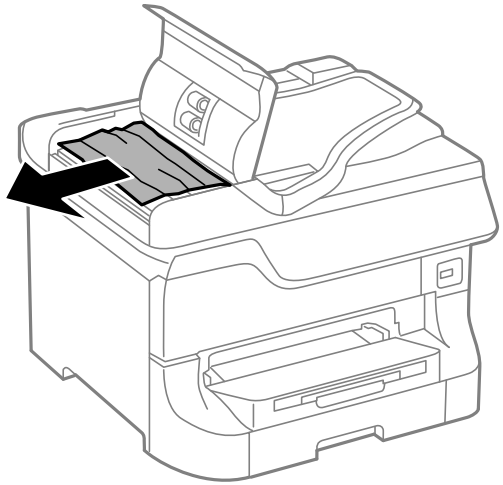

5. Close the ADF cover, then raise the document cover.

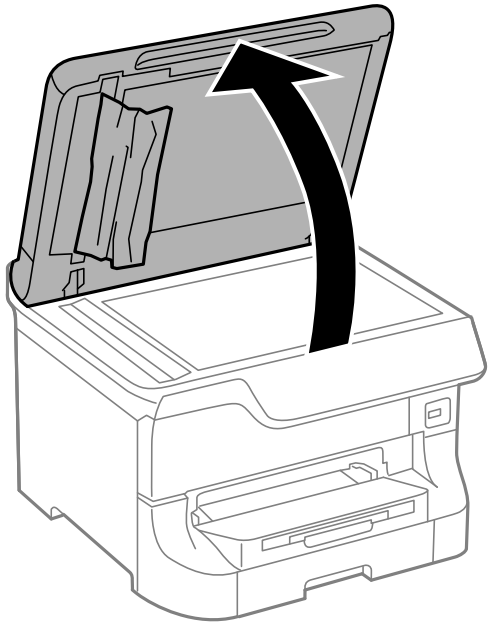

6. Carefully remove any jammed pages.

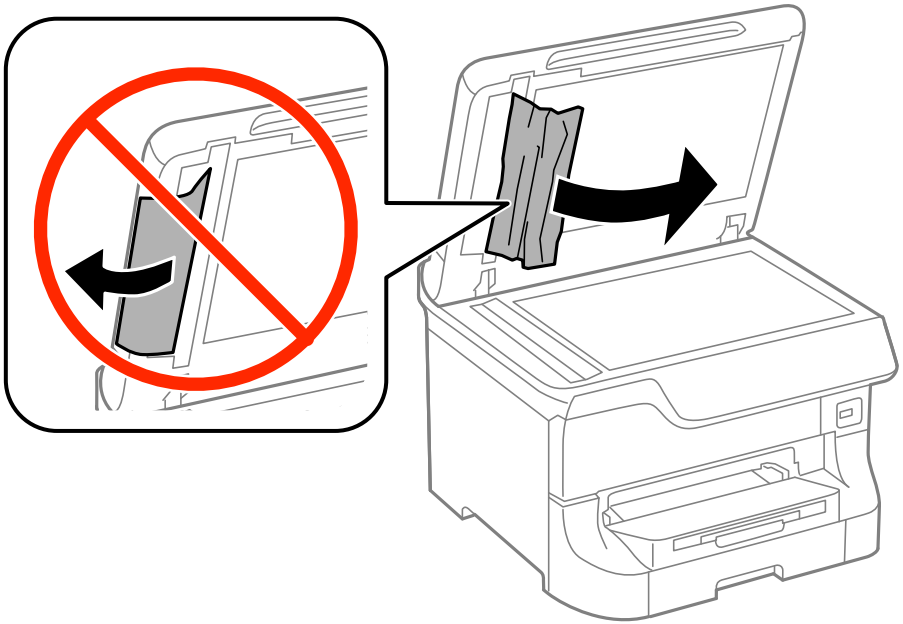

7. Lower the document cover.

8. Raise the ADF input tray and carefully remove any jammed pages.

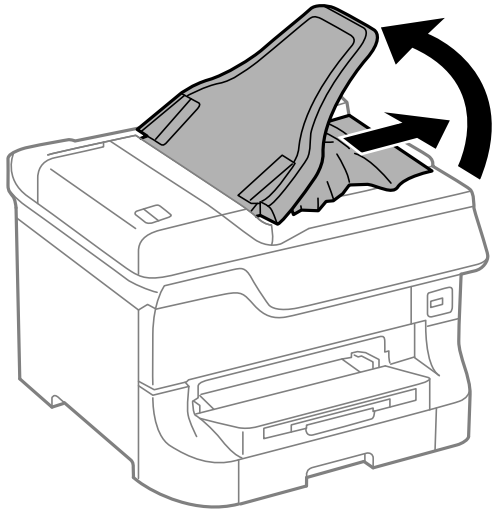

9. Lower the ADF input tray.
10. Reload your originals.

    **Caution:** Make sure you do not load the ADF beyond its capacity for your paper size. Also make sure your originals are not bent, folded, or curled and do not have tape, staples, or other materials that could obstruct the feeder.

11. Follow the prompts on the LCD screen to clear any error messages. If you still see a paper jam message, check the other paper jam solutions.

**Parent topic:** Solving Paper Problems

**Related references**

Paper Jam Problems in the Front Cover (A)
Paper Jam Problems in the Rear Paper Feed Slot (B1)
Paper Jam Problems in the Front Paper Feed Slot (B2)
Paper Jam Problems in the Cassette (C1/C2/C3/C4)
Paper Jam Problems in the Rear Cover 1 (D1)
Paper Jam Problems in the Rear Cover (E) of the Optional Paper Cassette Unit

## Paper Ejection Problems

If you have problems with paper ejecting properly, try these solutions:

- If paper does not eject fully, you may have set the wrong paper size. Cancel printing to eject the paper. Select the correct paper size when you reprint.
- If paper is wrinkled when it ejects, it may be damp or too thin. Load new paper and be sure to select the correct paper type setting when you reprint.

**Parent topic:** Solving Paper Problems

**Related references**

Paper or Media Type Settings - Printing Software

**Related tasks**

Cancelling Printing Using a Product Button

**Related topics**

Loading Paper

# Solving PostScript Printing Problems

Check these solutions if you have problems using the PostScript printing software.

Nothing Prints Using the Postscript Printing Software

Documents Print Incorrectly Using the Postscript Printing Software

Accessing Printer Properties - Postscript - Windows

**Parent topic:** Solving Problems

## Nothing Prints Using the Postscript Printing Software

If your document doesn't print, try these solutions:

- Make sure your product is turned on and properly connected.
- Make sure the printing language setting on the control panel is correct.
- If **Text Detection** is enabled on the control panel and you cannot print text, set the printing language to **PS3**.
- Make sure your product is selected as the printer in your printing program.
- In Windows, the product may not print if a large number of print jobs are sent. Try selecting **Print directly to the printer** on the Advanced tab in the printer properties.

**Parent topic:** Solving PostScript Printing Problems

**Related topics**

Enabling Epson Universal Print Driver (PCL) or PostScript Printing

## Documents Print Incorrectly Using the Postscript Printing Software

If your document does not print correctly, try these solutions:

- If the file you are printing was created in an application that allows you to change the data format, such as Adobe Photoshop, make sure the settings in the application match the printer driver settings.
- EPS files created in binary format may not print correctly. Try creating the file in ASCII format instead.
- In Windows, the product cannot print binary data if it is connected to the computer using a USB cable. Try selecting **ASCII** or **TBCP** as the **Output Protocol** setting on the Device Settings tab in the printer properties.
- In Windows, select the appropriate substitution fonts on the Device Settings tab in the printer properties.
- If the printed colors are incorrect, try adjusting the **Color Mode** setting on the Advanced tab of the printing software.
- If printing is slow, try selecting **Fast** as the **Print Quality** setting on the Advanced tab of the printing software.

**Parent topic:** Solving PostScript Printing Problems

**Related tasks**

Accessing Printer Properties - Postscript - Windows

## Accessing Printer Properties - Postscript - Windows

You can access the printer properties to view and change product settings.

1. Do one of the following:
   - **Windows 8.x:** Navigate to the **Apps** screen and select **Control Panel** > **Hardware and Sound** > **Devices and Printers**. Right-click the postscript driver for your product, and select **Printer properties**.
   - **Windows 7:** Click and select **Devices and Printers**. Right-click the postscript driver for your product and select **Printer properties**.
   - **Windows Vista:** Click and select **Control Panel**. Click **Printer** under **Hardware and Sound**, then right-click the postscript driver for your product and select **Properties**.

- **Windows XP:** Click **Start** and select **Printers and Faxes**. Right-click the postscript driver for your product and select **Properties**.

2. Click any tab to view and change the printer property settings.

**Parent topic:** Solving PostScript Printing Problems

# Solving Problems Printing from a Computer

Check these sections if you have problems while printing from your computer.

**Note:** When printing using AirPrint, the available print settings are different from those covered in this manual. See the Apple website for details.

**Note:** For problems while printing with the Epson Universal Print Driver or PostScript (PS3) printer software, see the sections covering that software in this manual.

Nothing Prints
Product Icon Does Not Appear in Windows Taskbar
Printing is Slow

**Parent topic:** Solving Problems

## Nothing Prints

If you have sent a print job and nothing prints, try these solutions:

- Make sure your product is turned on.
- Make sure any interface cables are connected securely at both ends.
- If you connected your product to a USB hub, make sure it is a first-tier hub. If it still does not print, connect your product directly to your computer instead of the hub.
- Run a product check to see if a test page prints. If the test page prints, check to see if your product software is installed correctly.
- If you are printing a large image, the computer may not have enough memory. Print the image at a lower resolution or a smaller file size.
- In Windows, click **Print Queue** on the Maintenance tab in the printer settings window and check for the following:
  - Check for any stalled or paused print jobs. Cancel or unpause any jobs as necessary.
  - Open the Printer menu and make sure the product is not offline.

- Open the Printer menu and set the product as the default printer, if necessary.

- In OS X, select **System Preferences** from the Apple menu or Dock, select **Print & Scan** or **Printers & Scanners**, then double-click your printer icon. Check to see if any jobs are paused. Cancel or unpause any jobs as necessary.
- If the user restriction feature (Access Control) is enabled, a user ID and password is required to print. If you do not know the user ID or password, contact your administrator for assistance.

  **Note:** In OS X, you may not be able to print if the user restriction feature is enabled. Contact your administrator for assistance.

- If you are using AirPrint, make sure AirPrint is enabled with the correct settings using Web Config.

**Parent topic:** Solving Problems Printing from a Computer

**Related tasks**

Running a Product Check

Using AirPrint

Entering a User ID and Password for Printing

## Product Icon Does Not Appear in Windows Taskbar

If you do not see your product icon in the Windows taskbar, first try restarting your computer. If that does not work, try this solution:

1. Do one of the following:
   - **Windows 8.x**: Navigate to the **Apps** screen and select **Control Panel** > **Hardware and Sound** > **Devices and Printers**.
   - **Windows 7**: Click and select **Devices and Printers**.
   - **Windows Vista**: Click , select **Control Panel**, and click **Printer** under **Hardware and Sound**.
   - **Windows XP**: Click **Start** and select **Printers and Faxes**. (Or open the **Control Panel**, select **Printers and Other Hardware**, if necessary, and **Printers and Faxes**.)
2. Right-click your product name, select **Printing Preferences**, and select your product name again if necessary.
3. Click the **Maintenance** tab.
4. Click the **Extended Settings** button.
5. Select **Enable EPSON Status Monitor 3**, then click **OK**.

6. Click the **Monitoring Preferences** button.
7. Click the checkbox for the option that adds the shortcut icon to the taskbar.
8. Click **OK** to close the open program windows.

**Parent topic:** Solving Problems Printing from a Computer

## Printing is Slow

If printing becomes slow, try these solutions:

- Make sure your system meets the requirements for your operating system. If you are printing a high-resolution image, you may need more than the minimum requirements. If necessary, increase your system's memory.
- If you are using Windows 7, close the **Devices and Printers** window before you print.
- Make sure **Quiet Mode** is turned off.
- Clear space on your hard drive or run a defragmentation utility to free up existing space.
- Close any programs you are not using when you print.
- If your product is connected to a USB hub, connect it directly to your computer instead.
- If printing becomes slower after printing continuously for a long time, the product may have automatically slowed down to protect the print mechanism from overheating or becoming damaged. Let the product rest with the power on for 30 minutes, then try printing again.

For the fastest printing, select the following settings in your product software:

- Make sure the paper type setting matches the type of paper you loaded.
- Turn on any high speed settings in your product software.
- Select a lower print quality setting.
- Make sure the ink drying time has not been increased for double-sided printing.
- **Windows**: Click the **Maintenance** tab, select **Extended Settings**, and select the following settings:
  - **High Speed Copies**
  - **Always Spool RAW Datatype**
  - **Page Rendering Mode**
  - **Print as Bitmap**

**Parent topic:** Solving Problems Printing from a Computer

**Related references**

Windows System Requirements
OS X System Requirements
Paper or Media Type Settings - Printing Software

**Related tasks**

Selecting Basic Print Settings - Windows
Selecting Extended Settings - Windows
Selecting Basic Print Settings - OS X

# Solving Page Layout and Content Problems

Check these sections if you have problems with the layout or content of your printed pages.

**Note:** When printing using AirPrint, the available print settings are different from those covered in this manual. See the Apple website for details.

Inverted Image
Too Many Copies Print
Blank Pages Print
Incorrect Margins on Printout
Incorrect Characters Print
Incorrect Image Size or Position
Slanted Printout

**Parent topic:** Solving Problems

## Inverted Image

If your printed image is inverted unexpectedly, try these solutions:

- Turn off any mirror or inversion settings in your printing application.
- Turn off the **Mirror Image**, **Flip horizontally**, or **Reverse page orientation** settings in your printer software. (This option has different names, depending on your operating system version.)

**Note:** Leave these options turned on when you print on Epson Iron-on Cool Peel Transfer paper, if available for your product.

**Parent topic:** Solving Page Layout and Content Problems

**Related tasks**

Selecting Additional Layout and Print Options - Windows

Selecting Basic Print Settings - OS X

## Too Many Copies Print

Make sure that the **Copies** setting in your printing program or printer software is not set for multiple copies.

**Parent topic:** Solving Page Layout and Content Problems

**Related tasks**

Selecting Basic Print Settings - Windows

Selecting Basic Print Settings - OS X

## Blank Pages Print

If blank pages print unexpectedly, try these solutions:

- Make sure you selected the correct paper size settings in your printing program and printer software.
- If a blank page exists in a document you are printing and you want to skip printing it, select the **Skip Blank Page** setting in your printer software.
- Run a print head nozzle check to see if any of the nozzles are clogged. Then clean the print head, if necessary.
- Make sure your product is selected as the printer in your printing program.

**Parent topic:** Solving Page Layout and Content Problems

**Related concepts**

Print Head Nozzle Check

Print Head Cleaning

**Related tasks**

Selecting Basic Print Settings - Windows

Selecting Extended Settings - Windows

Selecting Basic Print Settings - OS X

Selecting Printing Preferences - OS X

## Incorrect Margins on Printout

If your printed page has incorrect margins, try these solutions:

- Make sure you selected the correct paper size settings in your printing program and printer software.
- Make sure you selected the correct margins for your paper size in your printing program.
- Make sure your paper is positioned correctly for feeding into the printer.

You can use the preview option in your printer software to check your margins before you print.

**Parent topic:** Solving Page Layout and Content Problems

**Related tasks**

Selecting Basic Print Settings - Windows

Selecting Basic Print Settings - OS X

**Related topics**

Loading Paper

## Incorrect Characters Print

If incorrect characters appear in your prints, try these solutions before reprinting:

- Make sure any cables are securely connected at both ends.
- In Windows, delete all jobs from the Windows Spooler. Click **Print Queue** on the Maintenance tab in the printer settings window, and cancel any stalled print jobs.
- If your product is connected to a USB hub, connect it directly to your computer instead.
- If your computer entered sleep mode the last time you printed, the next print job after your computer exits sleep mode may contain garbled characters. Print your document again.
- If incorrect characters still appear in your prints, try connecting your product using a different cable.

**Parent topic:** Solving Page Layout and Content Problems

## Incorrect Image Size or Position

If your printed image is the wrong size or in the wrong position, try these solutions:

- Make sure you selected the correct paper size and layout settings in your printing program and printer software.
- Make sure you selected the correct paper size on the control panel.
- Make sure your paper is positioned correctly for feeding into the printer.

- Clean the scanner glass and document cover.

You can use the preview option in your printer software to check your margins before you print.

**Parent topic:** Solving Page Layout and Content Problems

**Related tasks**

Selecting Basic Print Settings - Windows
Selecting Additional Layout and Print Options - Windows
Selecting Basic Print Settings - OS X
Selecting Page Setup Settings - OS X
Cleaning Your Product

## Slanted Printout

If your printouts are slanted, try these solutions:

- Slide the edge guides against the edges of the paper.
- Select a higher print quality setting in your printer software.
- Turn off any high speed settings in your product software.
- Align the print head.
- Make sure the product is not printing while tilted or at an angle.

**Parent topic:** Solving Page Layout and Content Problems

**Related tasks**

Selecting Basic Print Settings - Windows
Selecting Basic Print Settings - OS X

**Related topics**

Loading Paper

# Solving Print Quality Problems

Check these sections if your printouts have problems with print quality, but your image looks fine on your computer screen.

**Note:** When printing using AirPrint, the available print settings are different from those covered in this manual. See the Apple website for details.

White or Dark Lines in Printout

Blurry or Smeared Printout
Faint Printout or Printout Has Gaps
Grainy Printout
Incorrect Colors

**Parent topic:** Solving Problems

## White or Dark Lines in Printout

If you notice white or dark lines in your prints (also called banding), try these solutions before you reprint:

- Run a nozzle check to see if any of the print head nozzles are clogged. Then clean the print head, if necessary.
- Make sure the paper type setting matches the type of paper you loaded.
- Make sure you loaded the printable side of the paper correctly for your product.
- Turn off any high speed settings in your product software.
- Align the print head.
- You may need to replace the ink cartridges.

**Parent topic:** Solving Print Quality Problems

**Related concepts**

Print Head Nozzle Check
Print Head Cleaning
Print Head Alignment

**Related references**

Paper or Media Type Settings - Printing Software

**Related tasks**

Selecting Additional Layout and Print Options - Windows
Selecting Printing Preferences - OS X

**Related topics**

Loading Paper
Replacing Ink Cartridges and Maintenance Boxes

## Blurry or Smeared Printout

If your printouts are blurry or smeared, try these solutions:

- Make sure your paper is not damp, curled, old, or loaded incorrectly in your product.
- Use a support sheet with special paper, or load special paper one sheet at a time.
- Make sure your paper meets the specifications for your product.
- Use Epson papers to ensure proper saturation and absorption of genuine Epson inks.
- Make sure the paper type setting in your product software matches the type of paper you loaded.
- Make sure you loaded the printable side of the paper correctly for your product.
- If you are printing on thick paper or envelopes, turn on the **Thick Paper** setting from the control panel or select **Thick Paper and Envelopes** in the Extended Settings of the printer software. (Turning this setting on will decrease print speed.)
- In Windows, if the paper is still smeared after selecting the **Thick Paper and Envelopes** setting, select the **Short Grain Paper** setting in the Extended Settings of the printer software.
- Remove each sheet from the output tray as it is printed.
- Avoid handling printouts on glossy paper right after printing to allow the ink to set.
- Turn off any high speed settings in your product software.
- If you print on both sides of a sheet of paper, smudges may appear on the reverse side of heavily saturated or dark images. If one side of a sheet will contain a lighter image or text, print that side first. Adjust the **Print Density** and/or **Increase Ink Drying Time** settings.
- If printed copies are smeared, lower the copy density setting on the control panel.
- Run a nozzle check to see if any of the print head nozzles are clogged. Then clean the print head, if necessary.
- Align the print head.
- Clean the paper path.

**Note:** Your product will not operate properly while tilted at an angle. Place it on a flat, stable surface that extends beyond the base of the product in all directions.

**Parent topic:** Solving Print Quality Problems

**Related concepts**

Print Head Cleaning

Print Head Alignment

**Related references**

Available Epson Papers

Paper Specifications

**Related tasks**

Selecting Basic Print Settings - Windows

Selecting Double-sided Printing Settings - Windows

Selecting Additional Layout and Print Options - Windows

Selecting Basic Print Settings - OS X

Selecting Double-sided Printing Settings - OS X

Selecting Printing Preferences - OS X

Cleaning the Paper Guide

**Related topics**

Loading Paper

## Faint Printout or Printout Has Gaps

If your printouts are faint or have gaps, try these solutions:

- Run a nozzle check to see if any of the print head nozzles are clogged. Then clean the print head, if necessary.
- The ink cartridges may be old or low on ink, and you may need to replace them.
- Make sure the paper type setting matches the type of paper you loaded.
- Make sure your paper is not damp, curled, old, or loaded incorrectly in your product.
- Align the print head.
- Clean the paper path.

**Parent topic:** Solving Print Quality Problems

**Related concepts**

Print Head Nozzle Check

Print Head Cleaning

Print Head Alignment

**Related references**

Paper or Media Type Settings - Printing Software

**Related tasks**

Selecting Basic Print Settings - Windows
Selecting Basic Print Settings - OS X
Cleaning the Paper Guide

**Related topics**

Replacing Ink Cartridges and Maintenance Boxes
Loading Paper

## Grainy Printout

If your printouts are grainy, try these solutions:

- Make sure you loaded the printable side of the paper correctly for your product.
- Select a higher print quality setting and turn off any high speed settings in your product software.
- Run a nozzle check to see if any of the print head nozzles are clogged. Then clean the print head, if necessary.
- Align the print head.
- You may need to increase the image resolution or print a smaller size; see your software documentation.

  **Note:** Images from the Internet may be low resolution and not result in a high quality printout.

- If you enlarged the image in an image-editing program, you need to increase the resolution setting to retain a high image quality. Increase the resolution by the same amount you increased the image size. For example, if the resolution is 300 dpi (dots per inch) and you will double the image size later, change the resolution setting to 600 dpi.

  **Note:** Higher resolution settings result in larger file sizes, which take longer to process and print. Consider the limitations of your computer system when selecting a resolution, and select the lowest possible resolution that produces acceptable quality to keep file sizes manageable.

**Parent topic:** Solving Print Quality Problems

**Related concepts**

Print Head Nozzle Check
Print Head Cleaning
Print Head Alignment

**Related tasks**

Selecting Basic Print Settings - Windows

Selecting Additional Layout and Print Options - Windows

Selecting Basic Print Settings - OS X

Selecting Printing Preferences - OS X

**Related topics**

Loading Paper

## Incorrect Colors

If your printouts have incorrect colors, try these solutions:

- Make sure the **Black/Grayscale** or **Grayscale** setting is not selected in your printer software.
- If you selected **Standard-Vivid** (Windows) or **Normal-Vivid** (OS X) as the quality setting in the printer software, try selecting **Standard** (Windows) or **Normal** (OS X) instead.
- Run a nozzle check to see if any of the print head nozzles are clogged. Then clean the print head, if necessary.
- The ink cartridges may be old or low on ink, and you may need to replace them.
- Your printed colors can never exactly match your on-screen colors. However, you can use a color management system to get as close as possible. Try using the color management options in your printer software.
- For best results, use genuine Epson ink and paper.

**Parent topic:** Solving Print Quality Problems

**Related concepts**

Print Head Nozzle Check

Print Head Cleaning

**Related references**

Available Epson Papers

**Related tasks**

Selecting Basic Print Settings - Windows

Selecting Additional Layout and Print Options - Windows

Selecting Basic Print Settings - OS X

Managing Color - OS X

**Related topics**

Replacing Ink Cartridges and Maintenance Boxes

# Solving Scanning Problems

Check these solutions if you have problems scanning with your product.

Scanning Software Does Not Operate Correctly

Cannot Start Epson Scan

**Parent topic:** Solving Problems

## Scanning Software Does Not Operate Correctly

If your scanning software does not operate correctly, try these solutions:

- Make sure your computer has adequate memory and meets the system requirements for your operating system.
- Make sure your computer is not running in a power-saving mode, such as sleep or standby. If so, wake your system and restart your scanning software.
- If you upgraded your operating system but did not reinstall your scanning software, try reinstalling it.

  **Note:** With OS X, in addition to scanning with Image Capture, you can download and install Epson Scan scanning software. Epson Scan provides additional image adjustment and photo correction features for enhancing scanned images, and provides an interface for TWAIN-compliant OCR scanning software. To download Epson Scan, visit Epson's driver download site (U.S. downloads or Canadian downloads).

**Parent topic:** Solving Scanning Problems

**Related concepts**

When to Uninstall Your Product Software

**Related references**

Windows System Requirements

OS X System Requirements

**Related tasks**

Scanning with OS X Using Image Capture

## Cannot Start Epson Scan

If you cannot start Epson Scan, try these solutions:

- Make sure your product is turned on and any interface cables are securely connected at both ends.
- Make sure Epson Scan is selected in your scanning program.
- Make sure your computer is not running in a power-saving mode, such as sleep or standby. If so, wake your system and restart Epson Scan.
- Check the connection setting and test the connection using Epson Scan Settings:

  **Windows 8.x**: Navigate to the **Apps** screen and select **EPSON Scan Settings**. Make sure the correct **Connection** setting is selected, then click the **Test** button.

  **Windows (other versions)**: Click or **Start** > **All Programs** or **Programs** > **EPSON** > **EPSON Scan** > **EPSON Scan Settings**. Make sure the correct **Connection** setting is selected, then click the **Test** button.

  **OS X**: Open the **Applications** folder, click **Epson Software**, and click **EPSON Scan Settings**. Make sure the correct **Connection** setting is selected, then click the **Test** button.
- Make sure you do not have multiple versions of Epson Scan installed. If you do, uninstall both versions and install one version.
- If you upgraded your operating system but did not reinstall Epson Scan, try reinstalling it.

**Note:** With OS X, in addition to scanning with Image Capture, you can download and install Epson Scan scanning software. Epson Scan provides additional image adjustment and photo correction features for enhancing scanned images, and provides an interface for TWAIN-compliant OCR scanning software. To download Epson Scan, visit Epson's driver download site (U.S. downloads or Canadian downloads).

**Parent topic:** Solving Scanning Problems

**Related tasks**

Starting a Scan Using the Epson Scan Icon

Scanning with OS X Using Image Capture

Entering a User ID and Password for Scanning - Windows

# Solving Scanned Image Quality Problems

Check these sections if a scanned image on your computer screen has a quality problem.

Image Consists of a Few Dots Only

Line of Dots Appears in All Scanned Images

Straight Lines in an Image Appear Crooked
Image is Distorted or Blurry
Image Colors are Patchy at the Edges
Image is Too Dark
Back of Original Image Appears in Scanned Image
Ripple Patterns Appear in an Image
Scanned Image Colors Do Not Match Original Colors
Scan Area is Not Adjustable in Thumbnail Preview
Scanned Image Edges are Cropped

**Parent topic:** Solving Problems

## Image Consists of a Few Dots Only

If your scanned image consists only of a few dots, try these solutions:

- Make sure you placed your original for scanning facing the correct way.
- If you are scanning using the Epson Scan **Black & White** setting, adjust the **Threshold** setting and scan again.

**Parent topic:** Solving Scanned Image Quality Problems

**Related references**

Available Image Adjustments - Office Mode

**Related topics**

Placing Originals on the Product

## Line of Dots Appears in All Scanned Images

If a line of dots appears in all your scanned images, clean the scanner glass with a soft, dry, lint-free cloth or use a small amount of glass cleaner on the cloth, if necessary. Paper towels are not recommended.

**Caution:** Do not spray glass cleaner directly on the scanner glass.

**Parent topic:** Solving Scanned Image Quality Problems

**Related tasks**

Cleaning Your Product

## Straight Lines in an Image Appear Crooked

If straight lines in an original appear crooked in a scanned image, make sure to place your original straight when you scan it.

**Parent topic:** Solving Scanned Image Quality Problems

**Related topics**

Placing Originals on the Product

## Image is Distorted or Blurry

If a scanned image appears distorted or blurry, try these solutions:

- Make sure your original is not wrinkled or warped. This may prevent the original from laying flat on the scanner glass.
- Do not move your original or your product during scanning.
- Your product will not operate properly while tilted at an angle. Place it on a flat, stable surface that extends beyond the base of the product in all directions.
- Adjust these Epson Scan settings (if available) and try scanning again:
  - Select the **Unsharp Mask** setting.
  - Adjust the **Auto Exposure** setting.
  - Increase the **Resolution** setting.

**Parent topic:** Solving Scanned Image Quality Problems

**Related topics**

Selecting Epson Scan Settings

## Image Colors are Patchy at the Edges

If you are scanning a thick or warped original, cover its edges with paper to block external light as you scan it.

**Parent topic:** Solving Scanned Image Quality Problems

## Image is Too Dark

If your scanned image is too dark, try these solutions:

- Adjust these Epson Scan settings (if available) and try scanning again:
  - **Auto Exposure**

- **Brightness**
- **Histogram Adjustment**

- Check the brightness and contrast settings of your computer monitor.

**Parent topic:** Solving Scanned Image Quality Problems

**Related topics**

Selecting Epson Scan Settings

## Back of Original Image Appears in Scanned Image

If an image from the back of a thin original appears in your scanned image, place a piece of black paper on the back of the original and scan it again.

**Parent topic:** Solving Scanned Image Quality Problems

## Ripple Patterns Appear in an Image

You may see a ripple pattern (called a moiré) in scanned images of printed documents. This is caused by interference from differing pitches in the scanner's screen and your original's halftone screen. To reduce this effect, adjust these Epson Scan settings (if available) and try scanning again:

- Select the **Descreening** setting.
- Select a lower **Resolution** setting.

**Parent topic:** Solving Scanned Image Quality Problems

**Related topics**

Selecting Epson Scan Settings

## Scanned Image Colors Do Not Match Original Colors

Printed colors can never exactly match the colors on your computer monitor because printers and monitors use different color systems: monitors use RGB (red, green, and blue) and printers typically use CMYK (cyan, magenta, yellow, and black).

Check the color matching and color management capabilities of your computer, display adapter, and the software you are using to see if they are affecting the palette of colors you see on your screen.

To adjust the colors in your scanned image, adjust these Epson Scan settings (if available) and try scanning again:

- Change the **Image Type** setting and experiment with different combinations of the next settings.
- Adjust the **Tone Correction** setting.

- Adjust the **Auto Exposure** setting.

**Parent topic:** Solving Scanned Image Quality Problems

**Related topics**

Selecting Epson Scan Settings

## Scan Area is Not Adjustable in Thumbnail Preview

If you cannot adjust the scan area while viewing a Thumbnail preview in Epson Scan, try these solutions:

- Create a scan area by drawing a marquee on your preview image and adjusting it as necessary.
- Switch to Normal preview mode, if available, and preview your image again.

**Parent topic:** Solving Scanned Image Quality Problems

**Related concepts**

Image Preview Guidelines

**Related tasks**

Selecting a Scan Area - Office Mode

Selecting a Scan Size - Professional Mode

## Scanned Image Edges are Cropped

If the edges of a scanned image are cropped, make sure your original is placed correctly for scanning. If necessary, move your original away from the edges of the scanner glass slightly.

**Parent topic:** Solving Scanned Image Quality Problems

**Related topics**

Placing Originals on the Product

# Solving Faxing Problems

Check these solutions if you have problems faxing with your product.

Cannot Send or Receive Faxes

Cannot Receive Faxes with a Telephone Connected to Your Product

Fax Memory Full Error Appears

Sent Fax Quality is Poor

Sent Fax is Received in an Incorrect Size

Received Fax Quality is Poor

Received Fax is Not Printed

**Parent topic:** Solving Problems

## Cannot Send or Receive Faxes

If you cannot send or receive faxes, try these solutions:

- If an error code is displayed on the control panel, try the solutions suggested in the error code list.
- If you are faxing from a computer, use the Epson FAX Utility to send your fax.
- Make sure the recipient's fax machine is turned on and working.
- Make sure paper is loaded correctly in your product.
- Make sure you have set up your header information and have not blocked your caller ID. Otherwise, your faxes might be rejected by the recipient's fax machine.
- If user restriction has been enabled, you may need to enter a user name and password. Contact your administrator for assistance.
- If you did not connect a telephone to your product, set the Receive Mode setting to **Auto** so you can receive faxes automatically.
- Check that the cable connecting your telephone wall jack to your product's **LINE** port is secure.
- Print a fax connection report using your product control panel or fax software to help diagnose the problem.
- Verify that the telephone wall jack works by connecting a phone to it and testing it.
- If there is no dial tone and you connected the product to a PBX (Private Branch Exchange) phone line or Terminal Adapter, change the **Line Type** setting to **PBX**. If you still cannot send a fax, turn off the turn off the product's dial tone detection setting. (Turning off the dial tone setting may cause the product to drop the first digit of a fax number.)
- If you connected your product to a DSL phone line, you must connect a DSL filter to the phone jack to enable faxing over the line. Contact your DSL provider for the necessary filter.
- If your telephone line has static, turn off your product's error correction mode fax communication setting and try faxing again.
- Try lowering your product's fax speed setting.
- Make sure the error correction mode (ECM) setting is turned on if you are trying to send or receive a color fax.
- If your telephone line uses call waiting and you have trouble receiving faxes, turn off call waiting to prevent disruption of incoming faxes.

- If you have subscribed to a call forwarding service, the product may not be able to receive faxes. Contact your service provider for assistance.
- Check your inbox and delete faxes after reading or printing them. If the inbox is full, the product cannot receive faxes.
- If you cannot send faxes at a specified time, make sure the date and time are set correctly on the product.
- If you cannot receive A3-size faxes, make sure you selected the correct paper size setting for the paper source containing the A3-size paper. Also, be sure to enable the paper source to receive faxes as the **Auto Select Settings** option.

**Note:** If your product is connected to a VoIP (Voice over Internet Protocol) phone line, keep in mind that fax machines are designed to work over analog phone lines. Epson cannot guarantee that fax transmission will work when using VoIP.

If your phone line includes voice mail answering services, calls or faxes may be inadvertently received by your voice mail service.

**Parent topic:** Solving Faxing Problems

**Related references**

Status Menu Error Codes

**Related tasks**

Connecting a Telephone or Answering Machine
Using the Fax Setup Wizard
Selecting the Line Type
Selecting Advanced Fax Settings
Receiving Faxes Automatically
Printing Fax Reports
Viewing a Fax on the LCD Screen

**Related topics**

Loading Paper

## Cannot Receive Faxes with a Telephone Connected to Your Product

If you cannot receive faxes when a telephone is connected to your product, try these solutions:

- Make sure your telephone is connected to your product's **EXT** port.
- Make sure the Receive Mode is set to **Manual**.

**Note:** When answering a call that is a fax, wait until the product's LCD screen displays a message that a connection has been made before you hang up.

**Parent topic:** Solving Faxing Problems

**Related tasks**

Connecting a Telephone or Answering Machine

Using the Fax Setup Wizard

## Fax Memory Full Error Appears

If you see an error message telling you that the product's fax memory is full, try these solutions:

- If you set the product to save received faxes in the product's memory or inbox, delete any faxes you have already read.
- If you set the product to save received faxes on a computer, turn on the selected computer. Once the faxes are saved on the computer, they are deleted from the product's memory.
- If you set the product to save received faxes on a memory device, connect the selected memory device containing the save fax folder, to the product. Once the faxes are saved on the memory device, they are deleted from the product's memory.

  **Note:** Make sure the memory device has enough available memory and is not write protected.

- If the memory is full, try sending a monochrome fax using the **Direct Send** feature or sending your faxes in smaller batches.
- If the product cannot print a received fax due to a product error, such as a paper jam, the memory full error may appear. Clear any product errors, then ask the sender to resend the fax.

**Parent topic:** Solving Faxing Problems

**Related references**

Output Settings - Fax

Fax Sending Options

**Related tasks**

Viewing a Fax on the LCD Screen

## Sent Fax Quality is Poor

If the sent fax quality is poor, try these solutions:

- Clean the scanner glass.

- Clean the ADF.
- Try changing the resolution setting on the control panel.
- Try adjusting the density setting on the control panel.
- If you are sending a monochrome fax to a single recipient, try sending the fax using the **Direct Send** feature.

  **Note:** If you send a high resolution monochrome fax without using the **Direct Send** feature, the product may automatically lower the resolution.

- Try enabling the error correction mode (ECM) setting.

**Parent topic:** Solving Faxing Problems

**Related references**

Basic Settings - Fax

Fax Sending Options

**Related tasks**

Cleaning Your Product

## Sent Fax is Received in an Incorrect Size

If your recipient receives a fax in an incorrect size, try these solutions:

- If you are trying to fax an A3-size document, make sure the recipient's fax machine supports the paper size. If the message **OK (Reduced Size)** appears in the fax transmission report, the recipient's fax machine does not support A3-size documents.
- If you are sending a fax using the scanner glass, make sure your original is placed correctly on the scanner glass and that the correct paper size is selected on the control panel.
- Clean the scanner glass and document cover.

**Parent topic:** Solving Faxing Problems

**Related tasks**

Placing Originals on the Scanner Glass

Cleaning Your Product

## Received Fax Quality is Poor

If you receive a poor quality fax, try these solutions:

- Try enabling the error correction mode (ECM) setting.
- Contact the fax sender and ask them to send the fax in a higher resolution.
- Try reprinting the received fax.

**Parent topic:** Solving Faxing Problems

**Related references**

Basic Settings - Fax

## Received Fax is Not Printed

If a received fax is not printed, try these solutions:

- Make sure the product is clear of any errors. The product cannot print received faxes if an error has occurred with the product, such as a paper jam.
- If the product has been set to save received faxes in the product's memory or inbox, received faxes are not automatically printed. Check the **Fax Output** setting on the product control panel and change it, if necessary.

**Parent topic:** Solving Faxing Problems

**Related references**

Output Settings - Fax

# Solving USB Flash Drive Problems

Check these solutions if you have problems using USB flash drives with your product.

Cannot View or Print from a USB Flash Drive

Cannot Save Files on a USB Flash Drive

Cannot Transfer Files To or From a USB Flash Drive

**Parent topic:** Solving Problems

## Cannot View or Print from a USB Flash Drive

If you cannot view or print photos or documents from a USB flash drive inserted in your product, try these solutions:

- Make sure memory devices are enabled.

- Make sure your drive is compatible with the product.
- Make sure the files on your drive are in the correct format.

**Parent topic:** Solving USB Flash Drive Problems

**Related references**

Interface Specifications

USB Device Photo File Specifications

**Related tasks**

Setting Up File Sharing for File Transfers From Your Computer

**Related topics**

Viewing and Printing From the LCD Screen

## Cannot Save Files on a USB Flash Drive

If you cannot save files on a USB flash drive inserted in your product, try these solutions:

- To save faxes on a USB flash drive, you need to create a folder in the **Fax Output** settings on the product control panel.
- Make sure the drive is not write-protected.
- Make sure the drive has enough available space.
- Make sure memory devices are enabled.
- Make sure the drive is compatible with the product.

**Parent topic:** Solving USB Flash Drive Problems

**Related references**

Interface Specifications

Output Settings - Fax

**Related tasks**

Setting Up File Sharing for File Transfers From Your Computer

## Cannot Transfer Files To or From a USB Flash Drive

If you have problems transferring files to or from a USB flash drive inserted in your product, try these solutions:

- Make sure your flash drive is compatible with the product.
- Make sure your product is securely connected to your computer.

- Make sure that the file sharing setting for your product is set correctly.

**Parent topic:** Solving USB Flash Drive Problems

**Related references**

Interface Specifications

**Related topics**

Transferring Files on a USB Flash Drive

# When to Uninstall Your Product Software

If you have a problem that requires you to uninstall and re-install your software, follow the instructions for your operating system.

Uninstalling Product Software - Windows

Uninstalling Product Software - OS X

**Parent topic:** Solving Problems

## Uninstalling Product Software - Windows

You can uninstall and then re-install your product software to solve certain problems.

1. Turn off the product.
2. Disconnect any interface cables.
3. Do one of the following:
   - **Windows 8.x**: Navigate to the **Apps** screen and select **Control Panel** > **Programs** > **Programs and Features**. Select the uninstall option for your Epson product, then select **Uninstall/Change**.

     **Note:** If you see a **User Account Control** window, click **Yes** or **Continue**.

     Select your product again, if necessary, then select **OK**, and click **Yes** to confirm the uninstallation.
   - **Windows (other versions)**: Click or **Start**, and select **All Programs** or **Programs**. Select **EPSON**, select your product, then click **EPSON Printer Software Uninstall**.

     **Note:** If you see a **User Account Control** window, click **Yes** or **Continue**.

     In the next window, select your product and click **OK**. Then follow any on-screen instructions.

4. Do one of the following to uninstall Epson Event Manager, then follow any on-screen instructions:
   - **Windows 8.x**: Select **Epson Event Manager** and click **Uninstall**.
   - **Windows 7/Windows Vista**: Open the Windows **Control Panel** utility. Select **Programs and Features**. (In Classic view, select **Programs** and click **Uninstall a program**.) Select **Epson Event Manager** and click **Uninstall/Change**.
   - **Windows XP**: Open the Windows **Control Panel** utility. Double-click **Add or Remove Programs**. Select **Epson Event Manager** and click **Change/Remove**.
5. Do one of the following to uninstall Epson Scan, then follow any on-screen instructions:
   - **Windows 8.x/Windows 7/Windows Vista:** Select **EPSON Scan** and click **Uninstall/Change**.
   - **Windows XP**: Select **EPSON Scan** and click **Change/Remove**.
6. Restart your computer, then see the *Start Here* sheet to re-install your software.

**Note:** If you find that re-installing your product software does not solve a problem, contact Epson.

**Parent topic:** When to Uninstall Your Product Software

## Uninstalling Product Software - OS X

In most cases, you do not need to uninstall your product software before re-installing it. However, you can download the Uninstaller utility from the Epson support website to uninstall your product software as described here.

**Note:** If you find that re-installing your product software does not solve a problem, contact Epson.

1. To download the Uninstaller utility, visit the Epson download site (U.S. downloads or Canadian downloads).
2. Follow the instructions on the screen to install the Uninstaller utility.
3. Quit all applications currently running on your Mac.
4. Double-click the **Uninstaller** icon.
5. Select the checkbox for each software program you want to uninstall.
6. Click **Uninstall**.
7. Follow the on-screen instructions to uninstall the software.
8. To reinstall your product software, see the *Start Here* sheet for instructions.

**Note:** If you uninstall the printer driver and your product name remains in the **Print & Fax**, **Print & Scan**, or **Printers & Scanners** window, select your product name and click the **–** (remove) icon to remove it.

**Parent topic:** When to Uninstall Your Product Software

# Where to Get Help

If you need to contact Epson for technical support services, use the following support options.

### Internet Support

Visit Epson's support website at epson.com/support (U.S.) or epson.ca/support (Canada) for solutions to common problems. You can download drivers and documentation, get FAQs and troubleshooting advice, or e-mail Epson with your questions.

### Speak to a Support Representative

Before you call Epson for support, please have the following information ready:

- Product name
- Product serial number (located on a label on the product)
- Proof of purchase (such as a store receipt) and date of purchase
- Computer configuration
- Description of the problem

Then call:

- U.S.: (562) 276-4382, 6 AM to 8 PM, Pacific Time, Monday through Friday, and 7 AM to 4 PM, Pacific Time, Saturday
- Canada: (905) 709-3839, 6 AM to 8 PM, Pacific Time, Monday through Friday, and 7 AM to 4 PM, Pacific Time, Saturday

Days and hours of support are subject to change without notice. Toll or long distance charges may apply.

### Purchase Supplies and Accessories

You can purchase genuine Epson ink and paper at Epson Supplies Central at epson.com/ink3 (U.S. sales) or epson.ca (Canadian sales). You can also purchase supplies from an Epson authorized reseller. To find the nearest one, call 800-GO-EPSON (800-463-7766).

**Parent topic:** Solving Problems

# Technical Specifications

These sections list the technical specifications for your product.

**Note:** Epson offers a recycling program for end of life products. Please go to this site for information on how to return your products for proper disposal.


Windows System Requirements
OS X System Requirements
Scanning Specifications
Automatic Document Feeder (ADF) Specifications
Fax Specifications
Paper Specifications
Printable Area Specifications
Ink Cartridge Specifications
Dimension Specifications
Electrical Specifications
Environmental Specifications
Interface Specifications
External USB Device Specifications
Network Interface Specifications
Safety and Approvals Specifications
PS3 Mode Fonts
PCL5 Mode Fonts
PCL6 Mode Fonts
Symbol Sets


## Windows System Requirements

To use your product and its software, your computer should use one of these Microsoft operating systems:

- Windows 8.x
- Windows 7
- Windows Vista

- Windows XP Professional x64 Edition
- Windows XP SP3
- Windows Server 2012*
- Windows Server 2008R2*
- Windows Server 2008*
- Windows Server 2003R2*
- Windows Server 2003*

* Windows Server supports only the printer driver and Epson Scan; any additional included software is not supported.

**Note:** Visit Epson's support website at epson.com/support (U.S.) or epson.ca/support (Canada) for the latest in compatibility and drivers for your product.

**Parent topic:** Technical Specifications

## OS X System Requirements

To use your product and its software, your Mac should use one of these operating systems:

- OS X 10.9.x
- OS X 10.8.x
- OS X 10.7.x
- OS X 10.6.x
- OS X 10.5.8

**Note:** Visit Epson's support website at epson.com/support (U.S.) or epson.ca/support (Canada) for the latest in compatibility and drivers for your product.

**Parent topic:** Technical Specifications

## Scanning Specifications

| | |
|---|---|
| **Scanner type** | Flatbed, color |
| **Photoelectric device** | CIS |

| | |
|---|---|
| **Effective pixels** | 14040 × 20400 pixels at 1200 dpi |
| **Document size** | Maximum: 11.7 × 17 inches (297 × 431.8 mm) |
| **Scanning resolution** | 1200 dpi (main scan)<br>2400 dpi (sub scan) |
| **Output resolution** | 50 to 4800, 7200, and 9600 dpi<br>(50 to 4800 dpi in 1 dpi increments) |
| **Image data** | Color:<br>10 bits per pixel per color internal<br>8 bits per pixel per color external<br>Black and white:<br>10 bits per pixel per color internal<br>1 to 8 bits per pixel per color external |
| **Light source** | LED |

**Parent topic:** Technical Specifications

## Automatic Document Feeder (ADF) Specifications

| | |
|---|---|
| **Paper size** | A5 to A3 |
| **Paper type** | Plain paper |
| **Paper weight** | 14 lb (52 g/m$^2$) to 28 lb (105 g/m$^2$) |
| **Sheet feeding capacity** | Total thickness: 0.2 inch (5 mm)<br>Approximately 50 sheets at 20 lb (75 g/m$^2$) |

**Parent topic:** Technical Specifications

## Fax Specifications

| | |
|---|---|
| **Fax type** | Walk up, black-and-white and color fax capability (ITU-T Super Group 3) |

| | |
|---|---|
| **Support lines** | Standard analog telephone lines |
| | PBX (Private Branch Exchange) telephone systems |
| **Speed** | Up to 33.6 kbps |
| **Resolution** | **Monochrome** |
| | Standard: 203 pixels per inch × 98 lines per inch (8 pixels per mm × 3.85 lines per mm) |
| | Fine: 203 pixels per inch × 196 lines per inch (8 pixels per mm × 7.7 lines per mm) |
| | Super Fine: 203 pixels per inch × 392 lines per inch (8 pixels per mm × 15.4 lines per mm) |
| | Ultra Fine: 203 pixels per inch × 392 lines per inch (8 pixels per mm × 15.4 lines per mm) |
| | Photo: 203 pixels per inch × 196 lines per inch (8 pixels per mm × 7.7 lines per mm) |
| | **Color** |
| | Fine: 200 × 200 dpi |
| | Photo: 200 × 200 dpi |
| **Error correction mode** | CCITU/ITU Group 3 fax with error correction mode |
| **Page memory** | Up to 550 pages (ITU-T No. 1 chart; monochrome draft mode ) |
| **Redial** | 2 times (with 1 minute intervals) |
| **Interface** | RJ-11 Phone Line |
| | RJ-11 Telephone set connection |

**Parent topic:** Technical Specifications

# Paper Specifications

**Note:** Since the quality of any particular brand or type of paper may be changed by the manufacturer at any time, Epson cannot guarantee the quality of any non-Epson brand or type of paper. Always test a sample of paper stock before purchasing large quantities or printing large jobs.

### Single-sheets

| | |
|---|---|
| **Size** | A3 (11.7 × 16.5 inches [297 × 420 mm])<br>A4 (8.3 × 11.7 inches [210 × 297 mm])<br>A5 (5.8 × 8.2 inches [148 × 210 mm])<br>A6 (4.1 × 5.8 inches [105 × 148 mm])<br>Letter (8.5 × 11 inches [216 × 279 mm])<br>Legal (8.5 × 14 inches [216 × 356 mm])<br>4 × 6 inches (102 × 152 mm)<br>5 × 7 inches (127 × 178 mm)<br>8 × 10 inches (203 × 254 mm)<br>3.5 × 5 inches (89 × 127 mm)<br>11 × 17 inches (279 × 432 mm)<br>13 × 19 inches (330 × 483 mm)<br>16:9 wide (4 × 7.1 inches [102 × 181 mm])<br>Half Letter (5.5 × 8.5 inches [140 × 279 mm])<br>Executive (7.25 × 10.5 inches [184 × 267 mm]) |
| **Paper types** | Plain paper and paper distributed by Epson |
| **Weight** | 17 lb (64 g/m$^2$) to 68 lb (256 g/m$^2$) |

### Envelopes

| | |
|---|---|
| **Size** | No. 10 (4.1 × 9.5 inches [105 × 241 mm]) |
| **Paper types** | Plain bond paper |
| **Weight** | 20 lb (75 g/m$^2$) to 24 lb (90 g/m$^2$) |

**Parent topic:** Technical Specifications

# Printable Area Specifications

## Single sheets

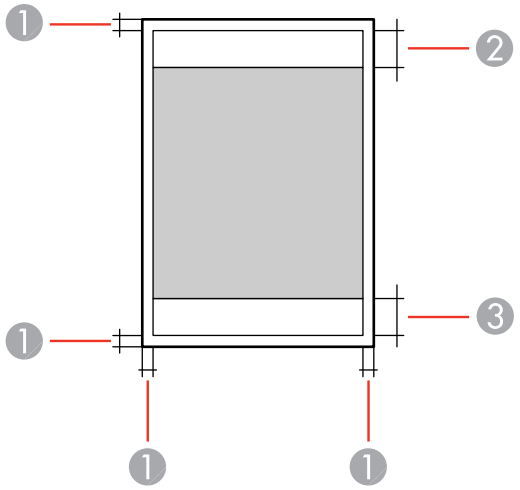


| | |
|---|---|
| 1 | 0.12 inch (3 mm) minimum |
| 2 | 1.81 inch (46 mm) minimum |
| 3 | 2.01 inch (51 mm) minimum |

## Envelopes

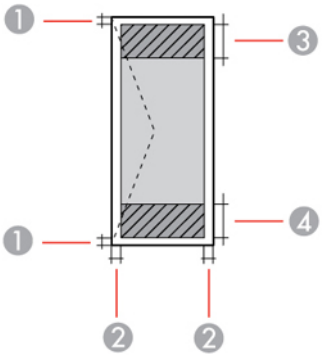

| | |
|---|---|
| 1 | 0.12 inch (3 mm) minimum |
| 2 | 0.20 inch (5 mm) minimum |
| 3 | 0.71 inch (18 mm) minimum |
| 4 | 1.81 inch (46 mm) minimum |

**Parent topic:** Technical Specifications

## Ink Cartridge Specifications

**Note:** This product uses only genuine Epson-brand cartridges. Other brands of ink cartridges and ink supplies are not compatible and, even if described as compatible, may not function properly.

The cartridges included with the printer are designed for printer setup and not for resale. After some ink is used for priming, the rest is available for printing. Yields vary considerably based on images printed, print settings, paper type, frequency of use, and temperature. For print quality, a variable amount of ink remains in the cartridge after the "replace cartridge" indicator comes on.

| | |
|---|---|
| **Color** | Cyan, Magenta, Yellow, Black |
| **Cartridge life** | Opened package: 6 months |
| | Unopened package: do not use if the date on the package has expired |
| **Temperature** | Storage: –4 to 104 °F (–20 to 40 °C) |
| | 1 month at 104 °F (40 °C) |
| | Ink freezes at –9.4 °F (–23 °C) |
| | Ink thaws and is usable after 3 hours at 77 °F (25 °C) |

**Note:** For best printing results, use up a cartridge within 6 months after installing it.

**Parent topic:** Technical Specifications

## Dimension Specifications

| | |
|---|---|
| **Height** | Stored: 18.3 inches (464 mm) |
| (printer only) | Printing: 22.1 inches (562 mm) |

| | |
|---|---|
| **Height**<br>(printer with three optional cassette units and cabinet) | Stored: 44.6 inches (1132 mm)<br>Printing: 48.4 inches (1230 mm) |
| **Width**<br>(printer only) | Stored: 23.2 inches (590 mm)<br>Printing: 23.2 inches (590 mm) |
| **Width**<br>(printer with three optional cassette units and cabinet) | Stored: 27.2 inches (690 mm)<br>Printing: 27.2 inches (690 mm) |
| **Depth**<br>(printer only) | Stored: 22.4 inches (570 mm)<br>Printing: 35.5 inches (902 mm) |
| **Depth**<br>(printer with three optional cassette units and cabinet) | Stored: 31.5 inches (800 mm)<br>Printing: 35.8 inches (910 mm) |
| **Weight***<br>(printer only) | 77.8 lb (35.3 kg) |
| **Weight***<br>(printer with three optional cassette units and cabinet) | 194.7 lb (88.3 kg) |

* Without ink cartridges or power cord

**Parent topic:** Technical Specifications

## Electrical Specifications

| | |
|---|---|
| **Power supply rating** | 100 to 240 V<br>220 to 240 V |
| **Rated frequency range** | 50/60 Hz |
| **Rated current** | 100 to 240 V model: 1.2 to 0.6 A<br>220 to 240 V model: 0.8 A |

| | |
|---|---|
| **Power consumption** (100 to 240 V model) | Standalone copying: Approx. 39 W (ISO/IEC24712)<br>Ready mode: 17 W<br>Sleep mode: 2.4 W<br>Power off mode: 0.4 W |
| **Power consumption** (220 to 240 V model) | Standalone copying: Approx. 39 W (ISO/IEC24712)<br>Ready mode: 17 W<br>Sleep mode: 2.9 W<br>Power off mode: 0.5 W |

**Parent topic:** Technical Specifications

## Environmental Specifications

| | |
|---|---|
| **Temperature** | Operating: 50 to 95 °F (10 to 35 °C)<br>Storage: –4 to 104 °F (–20 to 40 °C)<br>1 month at 104 °F (40 °C) |
| **Humidity** (without condensation) | Operating: 20 to 80% RH<br>Storage: 5 to 85% RH |

**Parent topic:** Technical Specifications

## Interface Specifications

| | |
|---|---|
| **Interface type** | Hi-Speed USB (for computer)<br>Hi-Speed USB (for external USB device) |

**Note:** Epson cannot guarantee the operation of externally connected devices.

**Parent topic:** Technical Specifications

**Related references**
USB Device Photo File Specifications

# External USB Device Specifications

Do not use devices with the following requirements:

- Dedicated driver
- Security settings
- Built-in USB hub

**Note:** Use only external storage devices with independent AC power sources. External storage devices that are powered via USB are not recommended. Epson cannot guarantee the operation of externally connected devices.

| | |
|---|---|
| **Magneto-optical drive** | 1.3GB |
| **Hard disk and USB flash drives** | 2TB<br>Formatted in FAT, FAT32, or exFAT. |

**Parent topic:** Technical Specifications

# Network Interface Specifications

**Wi-Fi**

| | |
|---|---|
| **Standards** | IEEE 802.11 b/g/n; complies with either IEEE 802.11 b/g or IEEE 802.11 b/g/n, depending on purchase location |
| **Wireless security** | WEP (64/128 bit)<br>WPA-PSK (AES); complies with WPA2 with support for WPA/WPA2 Personal<br>WPA-2 Enterprise |
| **Frequency range** | 2.4 GHz |

| | |
|---|---|
| **Coordination modes** | Infrastructure mode<br>Ad hoc mode (not supported for IEEE 802.11n)<br>Wi-Fi Direct mode (not supported for IEEE 802.11b or IEEE 802.11n)<br><br>**Note:** Wi-Fi Direct Simple AP mode available even if you connect the product to an Ethernet network. |

**Ethernet**

| | |
|---|---|
| **Standards** | IEEE802.3i (10BASE-T)<br>IEEE802.3u (100BASE-TX)<br>IEEE802.3ab (1000BASE-T); to prevent risk of radio interference, use a Category-5e or higher shielded twisted pair cable<br>IEEE802.3az (Energy Efficient Ethernet); connected device should be IEEE802.3az compliant |
| **Communication mode** | Auto, 10Mbps Full duplex, 10Mbps Half duplex, 100Mbps Full duplex, 100Mbps Half duplex |
| **Connector** | RJ-45 |

**Security Protocol**

- IEEE802.1X (requires a connected device compliant with IEEE802.1X)
- IPsec/IP Filtering
- SSL/TLS; HTTPS Server/Client and IPPS
- SNMPv3

**Parent topic:** Technical Specifications

# Safety and Approvals Specifications

| | |
|---|---|
| **United States** | Safety: UL60950-1<br>EMC: FCC part 15 Subpart B class B |

| | |
|---|---|
| **Canada** | Safety: CAN/CSA C22.2 No. 60950-1<br>EMC: CAN/CSA-CEI/IEC CISPR 22 Class B |

This equipment contains the following wireless module:

- Manufacturer: Askey Computer Corporation.
- Type: WLU6117-D69 (RoHS)

This product conforms to Part 15 of FCC Rules and RSS-210 of the IC Rules. Epson cannot accept responsibility for any failure to satisfy the protection requirements resulting from a non-recommended modification of the product. Operation is subject to the following two conditions: (1) this device may not cause harmful interference, and (2) this device must accept any interference received, including interference that may cause undesired operation of the device.

To prevent radio interference to the licensed service, this device is intended to be operated indoors and away from windows to provide maximum shielding. Equipment (or its transmit antenna) that is installed outdoors is subject to licensing.

**Parent topic:** Technical Specifications

# PS3 Mode Fonts

| |
|---|
| Albertus, Albertus Italic, Albertus Light |
| AntiqueOlive Roman, AntiqueOlive Italic, AntiqueOlive Bold, AntiqueOlive Compact |
| Apple Chancery |
| ITC AvantGarde Gothic Book, ITC AvantGarde Gothic Book Oblique, ITC AvantGarde Gothic Demi, ITC AvantGarde Gothic Demi Oblique |
| Bodoni, Bodoni Italic, Bodoni Bold, Bodoni Bold Italic, Bodoni Poster, Bodoni Poster Compressed |
| ITC Bookman Light, ITC Bookman Light Italic, ITC Bookman Demi, ITC Bookman Demi Italic |
| Carta |
| Chicago |
| Clarendon, Clarendon Light, Clarendon Bold |
| CooperBlack, CooperBlack Italic |
| Copperplate Gothic 32BC, Copperplate Gothic 33BC |
| Coronet |

| |
|---|
| Courier, Courier Oblique, Courier Bold, Courier Bold Oblique |
| GillSans, GillSans Italic, GillSans Bold, GillSans Bold Italic, GillSansCondensed, GillSans Condensed Bold, GillSans Light, GillSans Light Italic, GillSans Extra Bold |
| Eurostile, Eurostile Bold, Eurostile Extended Two, Eurostile Bold Extended Two |
| Geneva |
| Goudy Oldstyle, Goudy Oldstyle Italic, Goudy Bold, Goudy BoldItalic, Goudy ExtraBold |
| Helvetica, Helvetica Oblique, Helvetica Bold, Helvetica Bold Oblique, Helvetica Condensed, Helvetica Condensed Oblique, Helvetica Condensed Bold, Helvetica Condensed Bold Oblique, Helvetica Narrow, Helvetica Narrow Oblique, Helvetica Narrow Bold, Helvetica Narrow Bold Oblique |
| Hoefler Text, Hoefler Text Italic, Hoefler Text Black, Hoefler Text Black Italic, Hoefler Text Ornaments |
| Joanna, Joanna Italic, Joanna Bold, Joanna Bold Italic |
| LetterGothic, LetterGothic Slanted, LetterGothic Bold, LetterGothic Bold Slanted |
| ITC Lubalin Graph Book, ITC Lubalin Graph Book Oblique, ITC Lubalin Graph Demi, ITC Lubalin Graph Demi Oblique |
| Marigold |
| Monaco |
| ITC Mona Lisa Recut |
| New Century Schoolbook Roman, New Century Schoolbook Italic, New Century Schoolbook Bold, New Century Schoolbook Bold Italic |
| New York |
| Optima, Optima Italic, Optima Bold, Optima Bold Italic |
| Oxford |
| Palatino Roman, Palatino Italic, Palatino Bold, Palatino Bold Italic |
| Stempel Garamond Roman, Stempel Garamond Italic, Stempel Garamond Bold, Stempel Garamond Bold Italic |
| Symbol |
| Tekton |
| Times Roman, Times Italic, Times Bold, Times Bold Italic |
| Univers, Univers Oblique, Univers Bold, Univers Bold Oblique, Univers Light, Univers Light Oblique |

| |
|---|
| UniversCondensed, UniversCondensed Oblique, UniversCondensed Bold, UniversCondensed Bold Oblique |
| UniversExtended , UniversExtended Oblique, UniversExtended Bold, UniversExtended Bold Oblique |
| Wingdings |
| ITC ZapfChancery Medium Italic |
| ITC ZapfDingbats |
| Arial, Arial Italic, Arial Bold, Arial Bold Italic |
| Times New Roman, Times New Roman Italic, Times New Roman Bold, Times New Roman Bold Italic |

**Parent topic:** Technical Specifications

# PCL5 Mode Fonts

### Scalable Fonts

| Font name | Family | HP equivalent | Symbol set |
|---|---|---|---|
| FixedPitch 810 | Medium, Bold, Italic, Bold Italic | Courier | 1 |
| FixedPitch 850 | Regular, Bold, Italic, | Letter Gothic | 1 |
| FixedPitch 810 Dark | Medium, Bold, Italic, Bold Italic | Courier PS | 3 |
| Dutch 801 | Medium, Bold, Italic, Bold Italic | CG Times | 2 |
| Zapf Humanist 601 | Medium, Bold, Italic, Bold Italic | CG Omega | 3 |
| Ribbon 131 | — | Coronet | 3 |
| Clarendon 701 | — | Clarendon Condensed | 3 |
| Swiss 742 | Medium, Bold, Italic, Bold Italic | Univers | 2 |
| Swiss 742 Condensed | Medium, Bold, Italic, Bold Italic | Univers Condensed | 3 |
| Incised 901 | Medium, Bold, Italic | Antique Olive | 3 |

| Font name | Family | HP equivalent | Symbol set |
|---|---|---|---|
| Aldine 430 | Medium, Bold, Italic, Bold Italic | Garamond | 3 |
| Calligraphic 401 | — | Marigold | 3 |
| Flareserif 821 | Medium, Extra Bold | Albertus | 3 |
| Swiss 721 SWM | Medium, Bold, Italic, Bold Italic | Arial | 3 |
| Dutch 801 SWM | Medium, Bold, Italic, Bold Italic | Times New | 3 |
| Swiss 721 SWA | Medium, Bold, Oblique, Bold Oblique | Helvetica | 3 |
| Swiss 721 Narrow SWA | Medium, Bold, Oblique, Bold Oblique | Helvetica Narrow | 3 |
| Zapf Calligraphic 801 SWA | Medium, Bold, Italic, Bold Italic | Palatino | 3 |
| Geometric 711 SWA | Medium, Bold, Oblique, Bold Italic | ITC Avant Garde Gothic | 3 |
| Revival 711 SWA | Light, Demi Bold, Light Italic, Demi Bold Italic | ITC Bookman | 3 |
| Century 702 SWA | Medium, Bold, Italic, Bold Italic | New Century Schoolbook | 3 |
| Dutch 801 SWA | Medium, Bold, Italic, Bold Italic | Times | 3 |
| Chancery 801 Medium SWA Italic | — | ITC Zapf Chancery Medium Italic | 3 |
| Symbol SWM | — | Symbol | 4 |
| More WingBats SWM | — | Wingdings | 5 |
| Ding Dings SWA | — | ITC Zapf Dingbats | 6 |
| Symbol SWA | — | SymbolPS | 4 |
| David BT | Medium, Bold | David | 7 |
| Narkis Tam BT | Medium, Bold | Narkis | 7 |

| Font name | Family | HP equivalent | Symbol set |
|---|---|---|---|
| Miryam BT | Medium, Bold, Italic | Miryam | 7 |
| Koufi BT | Medium, Bold | Koufi | 8 |
| Naskh BT | Medium, Bold | Naskh | 8 |
| Ryadh BT | Medium, Bold | Ryadh | 8 |

### Bitmap Font

Line Printer, Symbol set 9

### OCR/Barcode Bitmap Font

| Font name | Family | Symbol set |
|---|---|---|
| OCR A | — | 10 |
| OCR B | — | 11 |
| Code 39 | 9.37cpi, 4.68cpi | 12 |
| EAN/UPC | Medium, Bold | 13 |

**Note:** Depending on the print density, or quality and color of the paper, the OCR/Barcode Bitmap fonts may not be readable. Print a sample and check for readability before printing large quantities.

**Parent topic:** Technical Specifications

## PCL6 Mode Fonts

### Scalable Fonts

| Font name | Family | HP equivalent | Symbol set |
|---|---|---|---|
| FixedPitch 810 | Medium, Bold, Italic, Bold Italic | Courier | 1 |
| FixedPitch 850 | Regular, Bold, Italic, | Letter Gothic | 1 |
| FixedPitch 810 Dark | Medium, Bold, Italic, Bold Italic | Courier PS | 3 |

| Font name | Family | HP equivalent | Symbol set |
|---|---|---|---|
| Dutch 801 | Medium, Bold, Italic, Bold Italic | CG Times | 2 |
| Zapf Humanist 601 | Medium, Bold, Italic, Bold Italic | CG Omega | 3 |
| Ribbon 131 | — | Coronet | 3 |
| Clarendon 701 | — | Clarendon Condensed | 3 |
| Swiss 742 | Medium, Bold, Italic, Bold Italic | Univers | 2 |
| Swiss 742 Condensed | Medium, Bold, Italic, Bold Italic | Univers Condensed | 3 |
| Incised 901 | Medium, Bold, Italic | Antique Olive | 3 |
| Aldine 430 | Medium, Bold, Italic, Bold Italic | Garamond | 3 |
| Calligraphic 401 | — | Marigold | 3 |
| Flareserif 821 | Medium, Extra Bold | Albertus | 3 |
| Swiss 721 SWM | Medium, Bold, Italic, Bold Italic | Arial | 3 |
| Dutch 801 SWM | Medium, Bold, Italic, Bold Italic | Times New | 3 |
| Swiss 721 SWA | Medium, Bold, Oblique, Bold Oblique | Helvetica | 3 |
| Swiss 721 Narrow SWA | Medium, Bold, Oblique, Bold Oblique | Helvetica Narrow | 3 |
| Zapf Calligraphic 801 SWA | Medium, Bold, Italic, Bold Italic | Palatino | 3 |
| Geometric 711 SWA | Medium, Bold, Oblique, Bold Italic | ITC Avant Garde Gothic | 3 |
| Revival 711 SWA | Light, Demi Bold, Light Italic, Demi Bold Italic | ITC Bookman | 3 |

| Font name | Family | HP equivalent | Symbol set |
|---|---|---|---|
| Century 702 SWA | Medium, Bold, Italic, Bold Italic | New Century Schoolbook | 3 |
| Dutch 801 SWA | Medium, Bold, Italic, Bold Italic | Times | 3 |
| Chancery 801 Medium SWA Italic | — | ITC Zapf Chancery Medium Italic | 3 |
| Symbol SWM | — | Symbol | 4 |
| More WingBats SWM | — | Wingdings | 5 |
| Ding Dings SWA | — | ITC Zapf Dingbats | 6 |
| Symbol SWA | — | SymbolPS | 4 |
| David BT | Medium, Bold | David | 7 |
| Narkis Tam BT | Medium, Bold | Narkis | 7 |
| Miryam BT | Medium, Bold, Italic | Miryam | 7 |
| Koufi BT | Medium, Bold | Koufi | 8 |
| Naskh BT | Medium, Bold | Naskh | 8 |
| Ryadh BT | Medium, Bold | Ryadh | 8 |

**Bitmap Font**

Line Printer, Symbol set 9

**Parent topic:** Technical Specifications

## Symbol Sets

Your product can access a variety of symbol sets. Many of these symbol sets differ only in the international characters specific to each language.

**Note:** Since most software handles fonts and symbols automatically, you may never need to adjust your product settings. However, if you write your own product control programs, or if you use older software that cannot control fonts, refer to these tables for details on the symbol sets.

When you consider which font to use, also consider which symbol set to combine with the font. Available symbol sets vary depending on the mode and font you choose.

**PCL5 Mode Symbol Sets**

| Symbol set name | Attribute | Font classification | | | | | | | | | | | | |
|---|---|---|---|---|---|---|---|---|---|---|---|---|---|---|
| | | 1 | 2 | 3 | 4 | 5 | 6 | 7 | 8 | 9 | 10 | 11 | 12 | 13 |
| ISO 60: Danish/Norwegian | 0D | ✓ | ✓ | ✓ | — | — | — | — | — | — | — | — | — | — |
| Roman Extension | 0E | — | — | — | — | — | — | — | — | ✓ | — | — | — | — |
| ISO 15: Italian | 0I | ✓ | ✓ | ✓ | — | — | — | — | — | — | — | — | — | — |
| ISO 8859/1 Latin 1 | 0N | ✓ | ✓ | ✓ | — | — | — | — | — | ✓ | — | — | — | — |
| ISO 11: Swedish | 0S | ✓ | ✓ | ✓ | — | — | — | — | — | — | — | — | — | — |
| ISO 6: ASCII | 0U | ✓ | ✓ | ✓ | — | — | — | ✓ | ✓ | — | — | — | — | — |
| ISO 4: United Kingdom | 1E | ✓ | ✓ | ✓ | — | — | — | — | — | — | — | — | — | — |
| ISO 69: French | 1F | ✓ | ✓ | ✓ | — | — | — | — | — | — | — | — | — | — |
| ISO 29: German | 1G | ✓ | ✓ | ✓ | — | — | — | — | — | — | — | — | — | — |
| Legal | 1U | ✓ | ✓ | ✓ | — | — | — | — | — | ✓ | — | — | — | — |
| ISO 8859/2 Latin 2 | 2N | ✓ | ✓ | ✓ | — | — | — | — | — | ✓ | — | — | — | — |
| ISO 8859/4 Latin 4 | 4N | ✓ | ✓ | ✓ | — | — | — | — | — | — | — | — | — | — |
| ISO 17: Spanish | 2S | ✓ | ✓ | ✓ | — | — | — | — | — | — | — | — | — | — |
| Roman-9 | 4U | ✓ | ✓ | ✓ | — | — | — | — | — | — | — | — | — | — |

| Symbol set name | Attribute | Font classification | | | | | | | | | | | | |
|---|---|---|---|---|---|---|---|---|---|---|---|---|---|---|
| | | 1 | 2 | 3 | 4 | 5 | 6 | 7 | 8 | 9 | 10 | 11 | 12 | 13 |
| PS Math | 5M | ✓ | ✓ | ✓ | — | — | — | ✓ | ✓ | — | — | — | — | — |
| ISO 8859/9 Latin 5 | 5N | ✓ | ✓ | ✓ | — | — | — | — | — | ✓ | — | — | — | — |
| Windows 3.1 Latin 5 | 5T | ✓ | ✓ | ✓ | — | — | — | — | — | — | — | — | — | — |
| Microsoft Publishing | 6J | ✓ | ✓ | ✓ | — | — | — | — | — | — | — | — | — | — |
| Ventura Math | 6M | ✓ | ✓ | ✓ | — | — | — | — | — | — | — | — | — | — |
| ISO 8859/10 Latin 6 | 6N | ✓ | ✓ | ✓ | — | — | — | — | — | ✓ | — | — | — | — |
| DeskTop | 7J | ✓ | ✓ | ✓ | — | — | — | — | — | — | — | — | — | — |
| Math-8 | 8M | ✓ | ✓ | ✓ | — | — | — | ✓ | ✓ | — | — | — | — | — |
| Roman-8 | 8U | ✓ | ✓ | ✓ | — | — | — | — | — | ✓ | — | — | — | — |
| Windows 3.1 Latin 2 | 9E | ✓ | ✓ | ✓ | — | — | — | — | — | — | — | — | — | — |
| Pc1004 | 9J | ✓ | ✓ | ✓ | — | — | — | — | — | — | — | — | — | — |
| ISO 8859/15 Latin 9 | 9N | ✓ | ✓ | ✓ | — | — | — | — | — | ✓ | — | — | — | — |
| PC-Turkish | 9T | ✓ | ✓ | ✓ | — | — | — | — | — | — | — | — | — | — |
| Windows 3.0 Latin 1 | 9U | ✓ | ✓ | ✓ | — | — | — | — | — | — | — | — | — | — |
| PS Text | 10J | ✓ | ✓ | ✓ | — | — | — | — | — | — | — | — | — | — |
| PC-8, Code Page 437 | 10U | ✓ | ✓ | ✓ | — | — | — | — | — | ✓ | — | — | — | — |

| Symbol set name | Attribute | Font classification | | | | | | | | | | | | |
|---|---|---|---|---|---|---|---|---|---|---|---|---|---|---|
| | | 1 | 2 | 3 | 4 | 5 | 6 | 7 | 8 | 9 | 10 | 11 | 12 | 13 |
| PC-8 D/N Danish/Norwegian | 11U | ✓ | ✓ | ✓ | — | — | — | — | — | ✓ | — | — | — | — |
| MC Text | 12J | ✓ | ✓ | ✓ | — | — | — | — | — | — | — | — | — | — |
| PC-850 Multilingual | 12U | ✓ | ✓ | ✓ | — | — | — | — | — | ✓ | — | — | — | — |
| Ventura International | 13J | ✓ | ✓ | ✓ | — | — | — | — | — | — | — | — | — | — |
| PcEur858 | 13U | ✓ | ✓ | ✓ | — | — | — | — | — | — | — | — | — | — |
| Ventura US | 14J | ✓ | ✓ | ✓ | — | — | — | — | — | — | — | — | — | — |
| Pi Font | 15U | ✓ | ✓ | ✓ | — | — | — | — | — | — | — | — | — | — |
| PC852, Latin 2 | 17U | ✓ | ✓ | ✓ | — | — | — | — | — | — | — | — | — | — |
| Unicode 3.0 | 18N | ✓ | ✓ | ✓ | — | — | — | ✓ | ✓ | — | — | — | — | — |
| Windows Baltic | 19L | ✓ | ✓ | ✓ | — | — | — | — | — | — | — | — | — | — |
| Windows 3.1 Latin/Arabic | 19U | ✓ | ✓ | ✓ | — | — | — | — | — | — | — | — | — | — |
| PC-755 | 26U | ✓ | ✓ | ✓ | — | — | — | — | — | — | — | — | — | — |
| PC-866, Cyrillic | 3R | ✓ | ✓ | — | — | — | — | — | — | — | — | — | — | — |
| Greek8 | 8G | ✓ | ✓ | — | — | — | — | — | — | — | — | — | — | — |
| Windows Greek | 9G | ✓ | ✓ | — | — | — | — | — | — | — | — | — | — | — |
| Windows Cyrillic | 9R | ✓ | ✓ | — | — | — | — | — | — | — | — | — | — | — |

| Symbol set name | Attribute | Font classification | | | | | | | | | | | | |
|---|---|---|---|---|---|---|---|---|---|---|---|---|---|---|
| | | 1 | 2 | 3 | 4 | 5 | 6 | 7 | 8 | 9 | 10 | 11 | 12 | 13 |
| PC-851, Greek | 10G | ✓ | ✓ | — | — | — | — | — | — | — | — | — | — | — |
| ISO 8859/5 Cyrillic | 10N | ✓ | ✓ | — | — | — | — | — | — | ✓ | — | — | — | — |
| PC-8, Greek | 12G | ✓ | ✓ | — | — | — | — | — | — | — | — | — | — | — |
| ISO 8859/7 Greek | 12N | ✓ | ✓ | — | — | — | — | — | — | — | — | — | — | — |
| PC-866 UKR | 14R | ✓ | ✓ | — | — | — | — | — | — | — | — | — | — | — |
| Hebrew7 | 0H | ✓ | — | — | — | — | — | ✓ | — | — | — | — | — | — |
| ISO 8859/8 Hebrew | 7H | ✓ | — | — | — | — | — | ✓ | — | — | — | — | — | — |
| Hebrew8 | 8H | ✓ | — | — | — | — | — | ✓ | — | — | — | — | — | — |
| PC-862, Hebrew | 15H | — | — | — | — | — | — | ✓ | — | — | — | — | — | — |
| PC-862, Hebrew | 15Q | — | — | — | — | — | — | ✓ | — | — | — | — | — | — |
| Arabic8 | 8V | — | — | — | — | — | — | — | ✓ | — | — | — | — | — |
| HPWARA | 9V | — | — | — | — | — | — | — | ✓ | — | — | — | — | — |
| PC-864, Arabic | 10V | — | — | — | — | — | — | — | ✓ | — | — | — | — | — |
| Wingdings | 579L | — | — | — | — | ✓ | — | — | — | — | — | — | — | — |
| Symbol | 19M | — | — | — | ✓ | — | — | — | — | — | — | — | — | — |
| ZapfDigbats | 14L | — | — | — | — | — | ✓ | — | — | — | — | — | — | — |
| OCR A | 0O | — | — | — | — | — | — | — | — | — | ✓ | — | — | — |
| OCR B | 1O | — | — | — | — | — | — | — | — | — | — | ✓ | — | — |

| Symbol set name | Attribute | Font classification | | | | | | | | | | | | |
|---|---|---|---|---|---|---|---|---|---|---|---|---|---|---|
| | | 1 | 2 | 3 | 4 | 5 | 6 | 7 | 8 | 9 | 10 | 11 | 12 | 13 |
| OCR B Extension | 3Q | — | — | — | — | — | — | — | — | — | — | ✓ | — | — |
| Code3-9 | 0Y | — | — | — | — | — | — | — | — | — | — | — | ✓ | — |
| EAN/UPC | 8Y | — | — | — | — | — | — | — | — | — | — | — | — | ✓ |

**PCL6 Mode Symbol Sets**

| Symbol set name | Attribute | Font classification | | | | | | | | |
|---|---|---|---|---|---|---|---|---|---|---|
| | | 1 | 2 | 3 | 4 | 5 | 6 | 7 | 8 | 9 |
| ISO Norwegian | 4 | ✓ | ✓ | ✓ | — | — | — | — | — | — |
| ISO Italian | 9 | ✓ | ✓ | ✓ | — | — | — | — | — | — |
| ISO 8859-1 Latin 1 | 14 | ✓ | ✓ | ✓ | — | — | — | — | — | ✓ |
| ISO Swedish | 19 | ✓ | ✓ | ✓ | — | — | — | — | — | — |
| ASCII | 21 | ✓ | ✓ | ✓ | — | — | — | ✓ | ✓ | — |
| ISO United Kingdom | 37 | ✓ | ✓ | ✓ | — | — | — | — | — | — |
| ISO French | 38 | ✓ | ✓ | ✓ | — | — | — | — | — | — |
| ISO German | 39 | ✓ | ✓ | ✓ | — | — | — | — | — | — |
| Legal | 53 | ✓ | ✓ | ✓ | — | — | — | — | — | ✓ |
| ISO 8859-2 Latin 2 | 78 | ✓ | ✓ | ✓ | — | — | — | — | — | ✓ |
| ISO Spanish | 83 | ✓ | ✓ | ✓ | — | — | — | — | — | — |
| Roman-9 | 149 | ✓ | ✓ | ✓ | — | — | — | — | — | — |
| PS Math | 173 | ✓ | ✓ | ✓ | — | — | — | ✓ | ✓ | |
| ISO 8859-9 Latin 5 | 174 | ✓ | ✓ | ✓ | — | — | — | — | — | ✓ |

| Symbol set name | Attribute | Font classification | | | | | | | | |
|---|---|---|---|---|---|---|---|---|---|---|
| | | 1 | 2 | 3 | 4 | 5 | 6 | 7 | 8 | 9 |
| Windows 3.1 Latin 5 | 180 | ✓ | ✓ | ✓ | — | — | — | — | — | — |
| Microsoft Publishing | 202 | ✓ | ✓ | ✓ | — | — | — | — | — | — |
| ISO 8859/10 Latin 6 | 206 | ✓ | ✓ | ✓ | — | — | — | — | — | ✓ |
| DeskTop | 234 | ✓ | ✓ | ✓ | — | — | — | — | — | — |
| Math-8 | 269 | ✓ | ✓ | ✓ | — | — | — | ✓ | ✓ | |
| Roman-8 | 277 | ✓ | ✓ | ✓ | — | — | — | — | — | ✓ |
| Windows 3.1 Latin 2 | 293 | ✓ | ✓ | ✓ | — | — | — | — | — | — |
| Pc1004 | 298 | ✓ | ✓ | ✓ | — | — | — | — | — | — |
| ISO 8859-15 Latin 9 | 302 | ✓ | ✓ | ✓ | — | — | — | — | — | — |
| PC-Turkish | 308 | ✓ | ✓ | ✓ | — | — | — | — | — | — |
| Windows 3.0 | 309 | ✓ | ✓ | ✓ | — | — | — | — | — | — |
| PS Text | 330 | ✓ | ✓ | ✓ | — | — | — | — | — | — |
| PC-8 | 341 | ✓ | ✓ | ✓ | — | — | — | — | — | ✓ |
| PC-8 D/N | 373 | ✓ | ✓ | ✓ | — | — | — | — | — | ✓ |
| MC Text | 394 | ✓ | ✓ | ✓ | — | — | — | — | — | |
| PC-850 | 405 | ✓ | ✓ | ✓ | — | — | — | — | — | ✓ |
| PcEur858 | 437 | ✓ | ✓ | ✓ | — | — | — | — | — | — |
| Pi Font | 501 | ✓ | ✓ | ✓ | — | — | — | — | — | — |
| PC852 | 565 | ✓ | ✓ | ✓ | — | — | — | — | — | — |
| Unicode 3.0 | 590 | ✓ | ✓ | ✓ | — | — | — | ✓ | ✓ | — |
| WBALT | 620 | ✓ | ✓ | ✓ | — | — | — | — | — | — |

| Symbol set name | Attribute | Font classification | | | | | | | | |
|---|---|---|---|---|---|---|---|---|---|---|
| | | 1 | 2 | 3 | 4 | 5 | 6 | 7 | 8 | 9 |
| Windows 3.1 Latin 1 | 629 | ✓ | ✓ | ✓ | — | — | — | — | — | — |
| PC-755 | 853 | ✓ | ✓ | ✓ | — | — | — | — | — | — |
| Wingdings | 18540 | — | — | — | — | ✓ | — | — | — | — |
| Symbol | 621 | — | — | — | ✓ | — | — | — | — | — |
| ZapfDigbats | 460 | — | — | — | — | — | ✓ | — | — | — |
| PC-866, Cyrillic | 114 | ✓ | ✓ | — | — | — | — | — | — | — |
| Greek8 | 263 | ✓ | ✓ | — | — | — | — | — | — | — |
| Windows Greek | 295 | ✓ | ✓ | — | — | — | — | — | — | — |
| Windows Cyrillic | 306 | ✓ | ✓ | — | — | — | — | — | — | — |
| PC-851, Greek | 327 | ✓ | ✓ | — | — | — | — | — | — | — |
| ISO 8859/5 Cyrillic | 334 | ✓ | ✓ | — | — | — | — | — | — | — |
| PC-8, Greek | 391 | ✓ | ✓ | — | — | — | — | — | — | — |
| ISO 8859/7 Greek | 398 | ✓ | ✓ | — | — | — | — | — | — | — |
| PC-866 UKR | 466 | ✓ | ✓ | — | — | — | — | — | — | — |
| Hebrew7 | 8 | ✓ | — | — | — | — | — | — | — | — |
| ISO 8859/8 Hebrew | 232 | ✓ | — | — | — | — | — | ✓ | — | — |
| Hebrew8 | 264 | ✓ | — | — | — | — | — | ✓ | — | — |
| PC-862, Hebrew | 488 | — | — | — | — | — | — | ✓ | — | — |
| Arabic8 | 278 | — | — | — | — | — | — | — | ✓ | — |

| Symbol set name | Attribute | Font classification | | | | | | | | |
|---|---|---|---|---|---|---|---|---|---|---|
| | | 1 | 2 | 3 | 4 | 5 | 6 | 7 | 8 | 9 |
| HPWARA | 310 | — | — | — | — | — | — | — | ✓ | — |
| PC-864, Arabic | 342 | — | — | — | — | — | — | — | ✓ | — |

**Parent topic:** Technical Specifications

# Notices

Check these sections for important notices about your product.

**Note:** Epson offers a recycling program for end of life products. Please go to this site for information on how to return your products for proper disposal.

General Product Safety Instructions
FCC Compliance Statement
Software Notice
Trademarks
Copyright Notice

## General Product Safety Instructions

- Be sure to follow all warnings and instructions marked on the product.
- Use only the type of power source indicated on the product's label.
- Use only the power cord that comes with the product. Use of another cord may cause fires or shock. Do not use the cord with any other equipment.
- Place the product near a wall outlet where the plug can be easily unplugged.
- Avoid plugging the product into an outlet on the same circuit as a photo copier or air control system that regularly switches on and off, or on an outlet controlled by a wall switch or timer.
- Do not let the power cord become damaged or frayed. Place it to avoid abrasions, cuts, fraying, crimping, and kinking. Do not place objects on top of it and do not allow it to be stepped on or run over. Be careful to keep the cord straight at each end.
- If you use an extension cord with the product, make sure the total ampere rating of the devices plugged into the extension cord does not exceed the cord's ampere rating. Also, make sure the total ampere rating of all devices plugged into the wall outlet does not exceed the wall outlet's ampere rating.
- Always turn off the product using the power button, and wait until the power light stops flashing before unplugging the product or cutting off power to the electrical outlet.
- If you will not be using the product for a long period, unplug the power cord from the electrical outlet.
- Place the product on a flat, stable surface that extends beyond its base in all directions. It will not operate properly if it is tilted or at an angle.

- Allow space behind the product for the cables, and space above the product so that you can fully raise the document cover.
- Leave enough space in front of the product for the paper to be fully ejected.
- Avoid locations that are subject to rapid changes in heat or humidity, shocks or vibrations, or dust.
- Do not place or store the product outdoors.
- Do not place the product near excessive heat sources or in direct sunlight.
- Leave enough room around the product for sufficient ventilation. Do not block or cover openings in the case or insert objects through the slots.
- Keep the product away from potential sources of electromagnetic interference, such as loudspeakers or the base units of cordless telephones.
- When connecting the product to a computer or other device with a cable, ensure the correct orientation of the connectors. Each connector has only one correct orientation. Inserting a connector in the wrong orientation may damage both devices connected by the cable.
- Do not touch the flat white cable inside the product.
- Do not move the print head by hand; this may damage the product.
- Do not spill liquid on the product or use the product with wet hands.
- Do not use aerosol products that contain flammable gases inside or around the product. Doing so may cause fire.
- Do not press too hard on the document table when placing originals.
- Do not open the scanner section while the product is copying, printing, scanning, or performing any other functions.
- Be careful not to trap your fingers when closing the document cover or scanner.
- Except as specifically explained in your documentation, do not attempt to service the product yourself.
- Unplug the product and refer servicing to qualified service personnel under the following conditions: if the power cord or plug is damaged; if liquid has entered the product; if the product has been dropped or the case damaged; if the product does not operate normally or exhibits a distinct change in performance. Adjust only those controls that are covered by the operating instructions.
- Leave the ink cartridges installed. Removing the cartridges can dehydrate the print head and may prevent the product from printing.
- Before transporting the product, make sure that the print head is in the home (far right) position and the ink cartridges are in place.

- When storing or transporting the product, do not tilt it, stand it on its side, or turn it upside down; otherwise ink may leak.

Ink Cartridge Safety Instructions

LCD Screen Safety Instructions

Wireless Connection Safety Instructions

Telephone Equipment Safety Instructions

Cabinet Safety Instructions

**Parent topic:** Notices

## Ink Cartridge Safety Instructions

- Keep ink cartridges out of the reach of children and do not drink the ink.
- Be careful when you handle used ink cartridges; there may be ink remaining around the ink supply port. If ink gets on your skin, wash it off with soap and water. If it gets in your eyes, flush them immediately with water.
- Do not put your hand inside the product or touch any cartridges during printing.
- Install a new ink cartridge immediately after removing an expended one. Leaving cartridges uninstalled can dry out the print head and may prevent the product from printing.
- Do not remove or tear the label on the cartridge; this can cause leakage.
- Do not remove the transparent seal from the bottom of the cartridge. This may cause the cartridge to become unusable.
- Do not break the hooks on the side of the cartridge when removing it from the packaging.
- Do not touch the green IC chip on the side of the cartridge. This may prevent normal operation.
- Do not shake cartridges after opening their packages; this can cause them to leak.
- If you remove an ink cartridge for later use, protect the ink supply area from dirt and dust and store it in the same environment as the product. Note that there is a valve in the ink supply port, making covers or plugs unnecessary, but care is needed to prevent the ink from staining items that the cartridge touches. Do not touch the ink cartridge ink supply port or surrounding area.
- Use an ink cartridge before the date printed on its package.
- Do not dismantle an ink cartridge. This could damage the print head.
- Store ink cartridges in a cool, dark place.
- After bringing an ink cartridge inside from a cold storage site, allow it to warm up at room temperature for at least three hours before using it.

- Store ink cartridges with their labels facing upward. Do not store cartridges upside down.

**Parent topic:** General Product Safety Instructions

## LCD Screen Safety Instructions

- Use only a dry, soft cloth to clean the LCD screen. Do not use liquid or chemical cleansers.
- If the LCD screen is damaged, contact Epson. If the liquid crystal solution gets on your hands, wash them thoroughly with soap and water. If the liquid crystal solution gets into your eyes, flush them immediately with water. If discomfort or vision problems remain after a thorough flushing, see a doctor immediately.
- Do not press too hard on the LCD screen.
- Do not use a pointy or sharp object, such as a pen or your fingernail, to operate the LCD screen.

**Parent topic:** General Product Safety Instructions

## Wireless Connection Safety Instructions

Radio waves from this product may adversely affect the operation of medical equipment or automatically controlled devices, such as pacemakers, automatic doors or fire alarms. When using this product near such devices or inside a medical facility, follow the directions from authorized staff members at the facility, and follow all posted warnings and directions on the device to avoid causing an accident.

**Parent topic:** General Product Safety Instructions

## Telephone Equipment Safety Instructions

When using telephone equipment, you should always follow basic safety precautions to reduce the risk of fire, electric shock, and personal injury, including the following:

- Do not use the Epson product near water.
- Avoid using a telephone during an electrical storm. There may be a remote risk of electric shock from lightning.
- Do not use a telephone to report a gas leak in the vicinity of the leak.

**Caution:** To reduce the risk of fire, use only a No. 26 AWG or larger telecommunication line cord.

**Parent topic:** General Product Safety Instructions

## Cabinet Safety Instructions

- Do not install any other product on the cabinet besides the printer and paper cassettes mentioned in this manual.
- Do not climb on the cabinet or place heavy objects on it.
- Make sure the stands are securely attached to the cabinet or the product may fall over.
- Make sure the casters on the cabinet are locked when using the printer.
- Do not move the cabinet when the casters are locked.
- Avoid rolling the cabinet over uneven or rough surfaces with the printer installed.

**Parent topic:** General Product Safety Instructions

# FCC Compliance Statement

### For United States Users

This equipment complies with Part 68 of the FCC rules and the requirements adopted by the Administrative Council for Terminal Attachments ("ACTA") . On the surface of this equipment is a label that contains, among other information, a product identifier in the format US:AAAEQ##TXXXX. If requested, this number must be provided to the telephone company.

Applicable certification jack Universal Service Order Codes ("USOC") for the equipment: RJ11C.

A plug and jack used to connect this equipment to the premises wiring and telephone network must comply with the applicable FCC Part 68 rules and requirements adopted by the ACTA. A compliant telephone cord and modular plug is provided with this product. It is designed to be connected to a compatible modular jack that is also compliant. See installation instructions for details.

The REN is used to determine the number of devices that may be connected to a telephone line. Excessive RENs on a telephone line may result in the devices not ringing in response to an incoming call. In most but not all areas, the sum of RENs should not exceed five (5.0). To be certain of the number of devices that may be connected to a line, as determined by the total RENs, contact the local telephone company. For products approved after July 23, 2001 , the REN for this product is part of the product identifier that has the format US:AAAEQ##TXXXX. The digits represented by ## are the REN without a decimal point (e.g., 03 is a REN of 0.3). For earlier products, the REN is separately shown on the label.

If this equipment causes harm to the telephone network, the telephone company will notify you in advance that temporary discontinuance of service may be required. But if advance notice isn't practical, the telephone company will notify the customer as soon as possible. Also, you will be advised of your right to file a complaint with the FCC if you believe it is necessary.

The telephone company may make changes in its facilities, equipment, operations or procedures that could affect the operation of the equipment. If this happens the telephone company will provide advance notice in order for you to make necessary modifications to maintain uninterrupted service.

If you have problems with this product and require technical or customer support, please visit www.epson.com for more information.

This product is not intended to be repaired by the customer. If you experience trouble connecting this equipment to a telephone line, please contact:

Name: Epson America, Inc.

Address: 3840 Kilroy Airport Way, Long Beach, CA 90806 U.S.A.

Telephone: (562) 981-3840

If the equipment is causing harm to the telephone network, the telephone company may request that you disconnect the equipment until the problem is resolved.

This equipment may not be used on coin service provided by the telephone company. Connection to party line service is subject to state tariffs. Contact the state public utility commission, public service commission or corporation commission for information.

If your home has specially wired alarm equipment connected to the telephone line, ensure the installation of this equipment does not disable your alarm equipment. If you have questions about what will disable alarm equipment, consult your telephone company or a qualified installer.

The Telephone Consumer Protection Act of 1991 makes it unlawful for any person to use a computer or other electronic device, including fax machines, to send any message unless such message clearly contains in a margin at the top or bottom of each transmitted page or on the first page of the transmission, the date and time it is sent and an identification of the business or other entity, or other individual sending the message and the telephone number of the sending machine or such business, other entity, or individual. (The telephone number provided may not be a 900 number or any other number for which charges exceed local or long-distance transmission charges.)

In order to program this information into your fax machine, click the link below for instructions on entering fax header information.

According to the FCC's electrical safety advisory, we recommend that you may install an AC surge arrester in the AC outlet to which this equipment is connected. Telephone companies report that electrical surges, typically lightning transients, are very destructive to customer terminal equipment connected to AC power sources and that this is a major nationwide problem.

This equipment has been tested and found to comply with the limits for a Class B digital device, pursuant to Part 15 of the FCC Rules. These limits are designed to provide reasonable protection against harmful interference in a residential installation. This equipment generates, uses, and can radiate radio frequency energy and, if not installed and used in accordance with the instructions, may cause harmful

interference to radio or television reception. However, there is no guarantee that interference will not occur in a particular installation. If this equipment does cause interference to radio and television reception, which can be determined by turning the equipment off and on, the user is encouraged to try to correct the interference by one or more of the following measures:

- Reorient or relocate the receiving antenna.
- Increase the separation between the equipment and receiver.
- Connect the equipment into an outlet on a circuit different from that to which the receiver is connected.
- Consult the dealer or an experienced radio/TV technician for help.

**WARNING**

The connection of a non-shielded equipment interface cable to this equipment will invalidate the FCC Certification or Declaration of this device and may cause interference levels which exceed the limits established by the FCC for this equipment. It is the responsibility of the user to obtain and use a shielded equipment interface cable with this device. If this equipment has more than one interface connector, do not leave cables connected to unused interfaces. Changes or modifications not expressly approved by the manufacturer could void the user's authority to operate the equipment.

**For Canadian Users**

1. This product meets the applicable Industry Canada technical specifications.

2. The Ringer Equivalence Number is an indication of the maximum number of devices allowed to be connected to a telephone interface. The termination on an interface may consist of any combination of devices subject only to the requirement that the sum of the RENs of all the devices does not exceed five.

CAN ICES-3(B)/NMB-3(B)

Le présent matériel est conforme aux spécifications techniques applicables d'Industrie Canada.

L'indice d'équivalence de la sonnerie (IES) sert à indiquer le nombre maximal de terminaux qui peuvent être raccordés à une interface téléphonique. La terminaison d'une interface peut consister en une combinaison quelconque de dispositifs, à la seule condition que la somme d'indices d'équivalence de la sonnerie de tous les dispositifs n'excède pas 5.

CAN ICES-3(B)/NMB-3(B)

**Parent topic:** Notices

**Related tasks**

Using the Fax Setup Wizard

# Software Notice

1. This printer product includes open source software programs according to the license terms of each open source software program.
2. We provide the source code of some of these open softwares until five (5) years after the discontinuation of same model of this printer product. If you desire to receive the source code above, please contact the customer support of your region. You shall comply with the license terms of each open source software program.
3. The open source software programs are WITHOUT ANY WARRANTY; without even the implied warranty of MERCHANTABILITY AND FITNESS FOR A PARTICULAR PURPOSE. See the license agreements of each open source software program for more details, which are described below.

GNU GENERAL PUBLIC LICENSE

Version 2, June 1991

Copyright (C) 1989, 1991 Free Software Foundation, Inc., 51 Franklin Street, Fifth Floor, Boston, MA 02110-1301 USA Everyone is permitted to copy and distribute verbatim copies of this license document, but changing it is not allowed.

Preamble

The licenses for most software are designed to take away your freedom to share and change it. By contrast, the GNU General Public License is intended to guarantee your freedom to share and change free software--to make sure the software is free for all its users. This General Public License applies to most of the Free Software Foundation's software and to any other program whose authors commit to using it. (Some other Free Software Foundation software is covered by the GNU Lesser General Public License instead.) You can apply it to your programs, too.

When we speak of free software, we are referring to freedom, not price. Our General Public Licenses are designed to make sure that you have the freedom to distribute copies of free software (and charge for this service if you wish), that you receive source code or can get it if you want it, that you can change the software or use pieces of it in new free programs; and that you know you can do these things.

To protect your rights, we need to make restrictions that forbid anyone to deny you these rights or to ask you to surrender the rights. These restrictions translate to certain responsibilities for you if you distribute copies of the software, or if you modify it.

For example, if you distribute copies of such a program, whether gratis or for a fee, you must give the recipients all the rights that you have. You must make sure that they, too, receive or can get the source code. And you must show them these terms so they know their rights.

We protect your rights with two steps: (1) copyright the software, and (2) offer you this license which gives you legal permission to copy, distribute and/or modify the software.

Also, for each author's protection and ours, we want to make certain that everyone understands that there is no warranty for this free software. If the software is modified by someone else and passed on, we want its recipients to know that what they have is not the original, so that any problems introduced by others will not reflect on the original authors' reputations.

Finally, any free program is threatened constantly by software patents. We wish to avoid the danger that redistributors of a free program will individually obtain patent licenses, in effect making the program proprietary. To prevent this, we have made it clear that any patent must be licensed for everyone's free use or not licensed at all.

The precise terms and conditions for copying, distribution and modification follow.

GNU GENERAL PUBLIC LICENSE TERMS AND CONDITIONS FOR COPYING, DISTRIBUTION AND MODIFICATION

0. This License applies to any program or other work which contains a notice placed by the copyright holder saying it may be distributed under the terms of this General Public License. The "Program", below, refers to any such program or work, and a "work based on the Program" means either the Program or any derivative work under copyright law: that is to say, a work containing the Program or a portion of it, either verbatim or with modifications and/or translated into another language. (Hereinafter, translation is included without limitation in the term "modification".) Each licensee is addressed as "you".

Activities other than copying, distribution and modification are not covered by this License; they are outside its scope. The act of running the Program is not restricted, and the output from the Program is covered only if its contents constitute a work based on the Program (independent of having been made by running the Program). Whether that is true depends on what the Program does.

1. You may copy and distribute verbatim copies of the Program's source code as you receive it, in any medium, provided that you conspicuously and appropriately publish on each copy an appropriate copyright notice and disclaimer of warranty; keep intact all the notices that refer to this License and to the absence of any warranty; and give any other recipients of the Program a copy of this License along with the Program.

You may charge a fee for the physical act of transferring a copy, and you may at your option offer warranty protection in exchange for a fee.

2. You may modify your copy or copies of the Program or any portion of it, thus forming a work based on the Program, and copy and distribute such modifications or work under the terms of Section 1 above, provided that you also meet all of these conditions:

a) You must cause the modified files to carry prominent notices stating that you changed the files and the date of any change.

b) You must cause any work that you distribute or publish, that in whole or in part contains or is derived from the Program or any part thereof, to be licensed as a whole at no charge to all third parties under the terms of this License.

c) If the modified program normally reads commands interactively when run, you must cause it, when started running for such interactive use in the most ordinary way, to print or display an announcement including an appropriate copyright notice and a notice that there is no warranty (or else, saying that you provide a warranty) and that users may redistribute the program under these conditions, and telling the user how to view a copy of this License. (Exception: if the Program itself is interactive but does not normally print such an announcement, your work based on the Program is not required to print an announcement.)

These requirements apply to the modified work as a whole. If identifiable sections of that work are not derived from the Program, and can be reasonably considered independent and separate works in themselves, then this License, and its terms, do not apply to those sections when you distribute them as separate works. But when you distribute the same sections as part of a whole which is a work based on the Program, the distribution of the whole must be on the terms of this License, whose permissions for other licensees extend to the entire whole, and thus to each and every part regardless of who wrote it.

Thus, it is not the intent of this section to claim rights or contest your rights to work written entirely by you; rather, the intent is to exercise the right to control the distribution of derivative or collective works based on the Program.

In addition, mere aggregation of another work not based on the Program with the Program (or with a work based on the Program) on a volume of a storage or distribution medium does not bring the other work under the scope of this License.

3. You may copy and distribute the Program (or a work based on it, under Section 2) in object code or executable form under the terms of Sections 1 and 2 above provided that you also do one of the following:

a) Accompany it with the complete corresponding machine-readable source code, which must be distributed under the terms of Sections 1 and 2 above on a medium customarily used for software interchange; or,

b) Accompany it with a written offer, valid for at least three years, to give any third party, for a charge no more than your cost of physically performing source distribution, a complete machine-readable copy of the corresponding source code, to be distributed under the terms of Sections 1 and 2 above on a medium customarily used for software interchange; or,

c) Accompany it with the information you received as to the offer to distribute corresponding source code. (This alternative is allowed only for noncommercial distribution and only if you received the program in object code or executable form with such an offer, in accord with Subsection b above.)

The source code for a work means the preferred form of the work for making modifications to it. For an executable work, complete source code means all the source code for all modules it contains, plus any associated interface definition files, plus the scripts used to control compilation and installation of the executable. However, as a special exception, the source code distributed need not include anything that is normally distributed (in either source or binary form) with the major components (compiler, kernel, and

so on) of the operating system on which the executable runs, unless that component itself accompanies the executable.

If distribution of executable or object code is made by offering access to copy from a designated place, then offering equivalent access to copy the source code from the same place counts as distribution of the source code, even though third parties are not compelled to copy the source along with the object code.

4. You may not copy, modify, sublicense, or distribute the Program except as expressly provided under this License. Any attempt otherwise to copy, modify, sublicense or distribute the Program is void, and will automatically terminate your rights under this License. However, parties who have received copies, or rights, from you under this License will not have their licenses terminated so long as such parties remain in full compliance.

5. You are not required to accept this License, since you have not signed it. However, nothing else grants you permission to modify or distribute the Program or its derivative works. These actions are prohibited by law if you do not accept this License. Therefore, by modifying or distributing the Program (or any work based on the Program), you indicate your acceptance of this License to do so, and all its terms and conditions for copying, distributing or modifying the Program or works based on it.

6. Each time you redistribute the Program (or any work based on the Program), the recipient automatically receives a license from the original licensor to copy, distribute or modify the Program subject to these terms and conditions. You may not impose any further restrictions on the recipients' exercise of the rights granted herein. You are not responsible for enforcing compliance by third parties to this License.

7. If, as a consequence of a court judgment or allegation of patent infringement or for any other reason (not limited to patent issues), conditions are imposed on you (whether by court order, agreement or otherwise) that contradict the conditions of this License, they do not excuse you from the conditions of this License. If you cannot distribute so as to satisfy simultaneously your obligations under this License and any other pertinent obligations, then as a consequence you may not distribute the Program at all. For example, if a patent license would not permit royalty-free redistribution of the Program by all those who receive copies directly or indirectly through you, then the only way you could satisfy both it and this License would be to refrain entirely from distribution of the Program.

If any portion of this section is held invalid or unenforceable under any particular circumstance, the balance of the section is intended to apply and the section as a whole is intended to apply in other circumstances.

It is not the purpose of this section to induce you to infringe any patents or other property right claims or to contest validity of any such claims; this section has the sole purpose of protecting the integrity of the free software distribution system, which is implemented by public license practices. Many people have made generous contributions to the wide range of software distributed through that system in reliance on consistent application of that system; it is up to the author/donor to decide if he or she is willing to distribute software through any other system and a licensee cannot impose that choice.

This section is intended to make thoroughly clear what is believed to be a consequence of the rest of this License.

8. If the distribution and/or use of the Program is restricted in certain countries either by patents or by copyrighted interfaces, the original copyright holder who places the Program under this License may add an explicit geographical distribution limitation excluding those countries, so that distribution is permitted only in or among countries not thus excluded. In such case, this License incorporates the limitation as if written in the body of this License.

9. The Free Software Foundation may publish revised and/or new versions of the General Public License from time to time. Such new versions will be similar in spirit to the present version, but may differ in detail to address new problems or concerns.

Each version is given a distinguishing version number. If the Program specifies a version number of this License which applies to it and "any later version", you have the option of following the terms and conditions either of that version or of any later version published by the Free Software Foundation. If the Program does not specify a version number of this License, you may choose any version ever published by the Free Software Foundation.

10. If you wish to incorporate parts of the Program into other free programs whose distribution conditions are different, write to the author to ask for permission. For software which is copyrighted by the Free Software Foundation, write to the Free Software Foundation; we sometimes make exceptions for this. Our decision will be guided by the two goals of preserving the free status of all derivatives of our free software and of promoting the sharing and reuse of software generally.

NO WARRANTY

11. BECAUSE THE PROGRAM IS LICENSED FREE OF CHARGE, THERE IS NO WARRANTY FOR THE PROGRAM, TO THE EXTENT PERMITTED BY APPLICABLE LAW. EXCEPT WHEN OTHERWISE STATED IN WRITING THE COPYRIGHT HOLDERS AND/OR OTHER PARTIES PROVIDE THE PROGRAM "AS IS" WITHOUT WARRANTY OF ANY KIND, EITHER EXPRESSED OR IMPLIED, INCLUDING, BUT NOT LIMITED TO, THE IMPLIED WARRANTIES OF MERCHANTABILITY AND FITNESS FOR A PARTICULAR PURPOSE. THE ENTIRE RISK AS TO THE QUALITY AND PERFORMANCE OF THE PROGRAM IS WITH YOU. SHOULD THE PROGRAM PROVE DEFECTIVE, YOU ASSUME THE COST OF ALL NECESSARY SERVICING, REPAIR OR CORRECTION.

12. IN NO EVENT UNLESS REQUIRED BY APPLICABLE LAW OR AGREED TO IN WRITING WILL ANY COPYRIGHT HOLDER, OR ANY OTHER PARTY WHO MAY MODIFY AND/OR REDISTRIBUTE THE PROGRAM AS PERMITTED ABOVE, BE LIABLE TO YOU FOR DAMAGES, INCLUDING ANY GENERAL, SPECIAL, INCIDENTAL OR CONSEQUENTIAL DAMAGES ARISING OUT OF THE USE OR INABILITY TO USE THE PROGRAM (INCLUDING BUT NOT LIMITED TO LOSS OF DATA OR DATA BEING RENDERED INACCURATE OR LOSSES SUSTAINED BY YOU OR THIRD PARTIES OR A FAILURE OF THE PROGRAM TO OPERATE WITH ANY OTHER PROGRAMS), EVEN IF SUCH HOLDER OR OTHER PARTY HAS BEEN ADVISED OF THE POSSIBILITY OF SUCH DAMAGES.

END OF TERMS AND CONDITIONS

How to Apply These Terms to Your New Programs

If you develop a new program, and you want it to be of the greatest possible use to the public, the best way to achieve this is to make it free software which everyone can redistribute and change under these terms.

To do so, attach the following notices to the program. It is safest to attach them to the start of each source file to most effectively convey the exclusion of warranty; and each file should have at least the "copyright" line and a pointer to where the full notice is found.

<one line to give the program's name and a brief idea of what it does.> Copyright (C) <year> <name of author>

This program is free software; you can redistribute it and/or modify it under the terms of the GNU General Public License as published by the Free Software Foundation; either version 2 of the License, or (at your option) any later version.

This program is distributed in the hope that it will be useful, but WITHOUT ANY WARRANTY; without even the implied warranty of MERCHANTABILITY or FITNESS FOR A PARTICULAR PURPOSE. See the GNU General Public License for more details.

You should have received a copy of the GNU General Public License along with this program; if not, write to the Free Software Foundation, Inc., 51 Franklin Street, Fifth Floor, Boston, MA 02110-1301 USA.

Also add information on how to contact you by electronic and paper mail.

If the program is interactive, make it output a short notice like this when it starts in an interactive mode:

Gnomovision version 69, Copyright (C) year name of author Gnomovision comes with ABSOLUTELY NO WARRANTY; for details type 'show w'. This is free software, and you are welcome to redistribute it under certain conditions; type 'show c' for details.

The hypothetical commands 'show w' and 'show c' should show the appropriate parts of the General Public License. Of course, the commands you use may be called something other than 'show w' and 'show c'; they could even be mouse-clicks or menu items--whatever suits your program.

You should also get your employer (if you work as a programmer) or your school, if any, to sign a "copyright disclaimer" for the program, if necessary. Here is a sample; alter the names:

Yoyodyne, Inc., hereby disclaims all copyright interest in the program `Gnomovision' (which makes passes at compilers) written by James Hacker.

<signature of Ty Coon>, 1 April 1989 Ty Coon, President of Vice

This General Public License does not permit incorporating your program into proprietary programs. If your program is a subroutine library, you may consider it more useful to permit linking proprietary

applications with the library. If this is what you want to do, use the GNU Lesser General Public License instead of this License.

GNU LESSER GENERAL PUBLIC LICENSE

Version 2.1, February 1999

Copyright (C) 1991, 1999 Free Software Foundation, Inc. 51 Franklin Street, Fifth Floor, Boston, MA 02110-1301 USA Everyone is permitted to copy and distribute verbatim copies of this license document, but changing it is not allowed.

[This is the first released version of the Lesser GPL. It also counts as the successor of the GNU Library Public License, version 2, hence the version number 2.1.]

Preamble

The licenses for most software are designed to take away your freedom to share and change it. By contrast, the GNU General Public Licenses are intended to guarantee your freedom to share and change free software--to make sure the software is free for all its users.

This license, the Lesser General Public License, applies to some specially designated software packages--typically libraries--of the Free Software Foundation and other authors who decide to use it. You can use it too, but we suggest you first think carefully about whether this license or the ordinary General Public License is the better strategy to use in any particular case, based on the explanations below.

When we speak of free software, we are referring to freedom of use, not price. Our General Public Licenses are designed to make sure that you have the freedom to distribute copies of free software (and charge for this service if you wish); that you receive source code or can get it if you want it; that you can change the software and use pieces of it in new free programs; and that you are informed that you can do these things.

To protect your rights, we need to make restrictions that forbid distributors to deny you these rights or to ask you to surrender these rights. These restrictions translate to certain responsibilities for you if you distribute copies of the library or if you modify it.

For example, if you distribute copies of the library, whether gratis or for a fee, you must give the recipients all the rights that we gave you. You must make sure that they, too, receive or can get the source code. If you link other code with the library, you must provide complete object files to the recipients, so that they can relink them with the library after making changes to the library and recompiling it. And you must show them these terms so they know their rights.

We protect your rights with a two-step method: (1) we copyright the library, and (2) we offer you this license, which gives you legal permission to copy, distribute and/or modify the library.

To protect each distributor, we want to make it very clear that there is no warranty for the free library. Also, if the library is modified by someone else and passed on, the recipients should know that what they

have is not the original version, so that the original author's reputation will not be affected by problems that might be introduced by others.

Finally, software patents pose a constant threat to the existence of any free program. We wish to make sure that a company cannot effectively restrict the users of a free program by obtaining a restrictive license from a patent holder. Therefore, we insist that any patent license obtained for a version of the library must be consistent with the full freedom of use specified in this license.

Most GNU software, including some libraries, is covered by the ordinary GNU General Public License. This license, the GNU Lesser General Public License, applies to certain designated libraries, and is quite different from the ordinary General Public License. We use this license for certain libraries in order to permit linking those libraries into non-free programs.

When a program is linked with a library, whether statically or using a shared library, the combination of the two is legally speaking a combined work, a derivative of the original library. The ordinary General Public License therefore permits such linking only if the entire combination fits its criteria of freedom. The Lesser General Public License permits more lax criteria for linking other code with the library.

We call this license the "Lesser" General Public License because it does Less to protect the user's freedom than the ordinary General Public License. It also provides other free software developers Less of an advantage over competing non-free programs. These disadvantages are the reason we use the ordinary General Public License for many libraries. However, the Lesser license provides advantages in certain special circumstances.

For example, on rare occasions, there may be a special need to encourage the widest possible use of a certain library, so that it becomes a de-facto standard. To achieve this, non-free programs must be allowed to use the library. A more frequent case is that a free library does the same job as widely used non-free libraries. In this case, there is little to gain by limiting the free library to free software only, so we use the Lesser General Public License.

In other cases, permission to use a particular library in non-free programs enables a greater number of people to use a large body of free software. For example, permission to use the GNU C Library in non-free programs enables many more people to use the whole GNU operating system, as well as its variant, the GNU/Linux operating system.

Although the Lesser General Public License is Less protective of the users' freedom, it does ensure that the user of a program that is linked with the Library has the freedom and the wherewithal to run that program using a modified version of the Library.

The precise terms and conditions for copying, distribution and modification follow. Pay close attention to the difference between a "work based on the library" and a "work that uses the library". The former contains code derived from the library, whereas the latter must be combined with the library in order to run.

GNU LESSER GENERAL PUBLIC LICENSE TERMS AND CONDITIONS FOR COPYING, DISTRIBUTION AND MODIFICATION

0. This License Agreement applies to any software library or other program which contains a notice placed by the copyright holder or other authorized party saying it may be distributed under the terms of this Lesser General Public License (also called "this License"). Each licensee is addressed as "you".

A "library" means a collection of software functions and/or data prepared so as to be conveniently linked with application programs (which use some of those functions and data) to form executables.

The "Library", below, refers to any such software library or work which has been distributed under these terms. A "work based on the Library" means either the Library or any derivative work under copyright law: that is to say, a work containing the Library or a portion of it, either verbatim or with modifications and/or translated straightforwardly into another language. (Hereinafter, translation is included without limitation in the term "modification".)

"Source code" for a work means the preferred form of the work for making modifications to it. For a library, complete source code means all the source code for all modules it contains, plus any associated interface definition files, plus the scripts used to control compilation and installation of the library.

Activities other than copying, distribution and modification are not covered by this License; they are outside its scope. The act of running a program using the Library is not restricted, and output from such a program is covered only if its contents constitute a work based on the Library (independent of the use of the Library in a tool for writing it). Whether that is true depends on what the Library does and what the program that uses the Library does.

1. You may copy and distribute verbatim copies of the Library's complete source code as you receive it, in any medium, provided that you conspicuously and appropriately publish on each copy an appropriate copyright notice and disclaimer of warranty; keep intact all the notices that refer to this License and to the absence of any warranty; and distribute a copy of this License along with the Library.

You may charge a fee for the physical act of transferring a copy, and you may at your option offer warranty protection in exchange for a fee.

2. You may modify your copy or copies of the Library or any portion of it, thus forming a work based on the Library, and copy and distribute such modifications or work under the terms of Section 1 above, provided that you also meet all of these conditions:

a) The modified work must itself be a software library.

b) You must cause the files modified to carry prominent notices stating that you changed the files and the date of any change.

c) You must cause the whole of the work to be licensed at no charge to all third parties under the terms of this License.

d) If a facility in the modified Library refers to a function or a table of data to be supplied by an application program that uses the facility, other than as an argument passed when the facility is invoked, then you must make a good faith effort to ensure that, in the event an application does not supply such function or table, the facility still operates, and performs whatever part of its purpose remains meaningful.

(For example, a function in a library to compute square roots has a purpose that is entirely well-defined independent of the application. Therefore, Subsection 2d requires that any application-supplied function or table used by this function must be optional: if the application does not supply it, the square root function must still compute square roots.)

These requirements apply to the modified work as a whole. If identifiable sections of that work are not derived from the Library, and can be reasonably considered independent and separate works in themselves, then this License, and its terms, do not apply to those sections when you distribute them as separate works. But when you distribute the same sections as part of a whole which is a work based on the Library, the distribution of the whole must be on the terms of this License, whose permissions for other licensees extend to the entire whole, and thus to each and every part regardless of who wrote it.

Thus, it is not the intent of this section to claim rights or contest your rights to work written entirely by you; rather, the intent is to exercise the right to control the distribution of derivative or collective works based on the Library.

In addition, mere aggregation of another work not based on the Library with the Library (or with a work based on the Library) on a volume of a storage or distribution medium does not bring the other work under the scope of this License.

3. You may opt to apply the terms of the ordinary GNU General Public License instead of this License to a given copy of the Library. To do this, you must alter all the notices that refer to this License, so that they refer to the ordinary GNU General Public License, version 2, instead of to this License. (If a newer version than version 2 of the ordinary GNU General Public License has appeared, then you can specify that version instead if you wish.) Do not make any other change in these notices.

Once this change is made in a given copy, it is irreversible for that copy, so the ordinary GNU General Public License applies to all subsequent copies and derivative works made from that copy. This option is useful when you wish to copy part of the code of the Library into a program that is not a library.

4. You may copy and distribute the Library (or a portion or derivative of it, under Section 2) in object code or executable form under the terms of Sections 1 and 2 above provided that you accompany it with the complete corresponding machine-readable source code, which must be distributed under the terms of Sections 1 and 2 above on a medium customarily used for software interchange.

If distribution of object code is made by offering access to copy from a designated place, then offering equivalent access to copy the source code from the same place satisfies the requirement to distribute the source code, even though third parties are not compelled to copy the source along with the object code.

5. A program that contains no derivative of any portion of the Library, but is designed to work with the Library by being compiled or linked with it, is called a "work that uses the Library". Such a work, in isolation, is not a derivative work of the Library, and therefore falls outside the scope of this License.

However, linking a "work that uses the Library" with the Library creates an executable that is a derivative of the Library (because it contains portions of the Library), rather than a "work that uses the library". The

executable is therefore covered by this License. Section 6 states terms for distribution of such executables.

When a "work that uses the Library" uses material from a header file that is part of the Library, the object code for the work may be a derivative work of the Library even though the source code is not. Whether this is true is especially significant if the work can be linked without the Library, or if the work is itself a library. The threshold for this to be true is not precisely defined by law.

If such an object file uses only numerical parameters, data structure layouts and accessors, and small macros and small inline functions (ten lines or less in length), then the use of the object file is unrestricted, regardless of whether it is legally a derivative work. (Executables containing this object code plus portions of the Library will still fall under Section 6.)

Otherwise, if the work is a derivative of the Library, you may distribute the object code for the work under the terms of Section 6. Any executables containing that work also fall under Section 6, whether or not they are linked directly with the Library itself.

6. As an exception to the Sections above, you may also combine or link a "work that uses the Library" with the Library to produce a work containing portions of the Library, and distribute that work under terms of your choice, provided that the terms permit modification of the work for the customer's own use and reverse engineering for debugging such modifications.

You must give prominent notice with each copy of the work that the Library is used in it and that the Library and its use are covered by this License. You must supply a copy of this License. If the work during execution displays copyright notices, you must include the copyright notice for the Library among them, as well as a reference directing the user to the copy of this License. Also, you must do one of these things:

a) Accompany the work with the complete corresponding machine-readable source code for the Library including whatever changes were used in the work (which must be distributed under Sections 1 and 2 above); and, if the work is an executable linked with the Library, with the complete machine-readable "work that uses the Library", as object code and/or source code, so that the user can modify the Library and then relink to produce a modified executable containing the modified Library. (It is understood that the user who changes the contents of definitions files in the Library will not necessarily be able to recompile the application to use the modified definitions.)

b) Use a suitable shared library mechanism for linking with the Library. A suitable mechanism is one that (1) uses at run time a copy of the library already present on the user's computer system, rather than copying library functions into the executable, and (2) will operate properly with a modified version of the library, if the user installs one, as long as the modified version is interface-compatible with the version that the work was made with.

c) Accompany the work with a written offer, valid for at least three years, to give the same user the materials specified in Subsection 6a, above, for a charge no more than the cost of performing this distribution.

d) If distribution of the work is made by offering access to copy from a designated place, offer equivalent access to copy the above specified materials from the same place.

e) Verify that the user has already received a copy of these materials or that you have already sent this user a copy.

For an executable, the required form of the "work that uses the Library" must include any data and utility programs needed for reproducing the executable from it. However, as a special exception, the materials to be distributed need not include anything that is normally distributed (in either source or binary form) with the major components (compiler, kernel, and so on) of the operating system on which the executable runs, unless that component itself accompanies the executable.

It may happen that this requirement contradicts the license restrictions of other proprietary libraries that do not normally accompany the operating system. Such a contradiction means you cannot use both them and the Library together in an executable that you distribute.

7. You may place library facilities that are a work based on the Library side-by-side in a single library together with other library facilities not covered by this License, and distribute such a combined library, provided that the separate distribution of the work based on the Library and of the other library facilities is otherwise permitted, and provided that you do these two things:

a) Accompany the combined library with a copy of the same work based on the Library, uncombined with any other library facilities. This must be distributed under the terms of the Sections above.

b) Give prominent notice with the combined library of the fact that part of it is a work based on the Library, and explaining where to find the accompanying uncombined form of the same work.

8. You may not copy, modify, sublicense, link with, or distribute the Library except as expressly provided under this License. Any attempt otherwise to copy, modify, sublicense, link with, or distribute the Library is void, and will automatically terminate your rights under this License. However, parties who have received copies, or rights, from you under this License will not have their licenses terminated so long as such parties remain in full compliance.

9. You are not required to accept this License, since you have not signed it. However, nothing else grants you permission to modify or distribute the Library or its derivative works. These actions are prohibited by law if you do not accept this License. Therefore, by modifying or distributing the Library (or any work based on the Library), you indicate your acceptance of this License to do so, and all its terms and conditions for copying, distributing or modifying the Library or works based on it.

10. Each time you redistribute the Library (or any work based on the Library), the recipient automatically receives a license from the original licensor to copy, distribute, link with or modify the Library subject to these terms and conditions. You may not impose any further restrictions on the recipients' exercise of the rights granted herein. You are not responsible for enforcing compliance by third parties with this License.

11. If, as a consequence of a court judgment or allegation of patent infringement or for any other reason (not limited to patent issues), conditions are imposed on you (whether by court order, agreement or otherwise) that contradict the conditions of this License, they do not excuse you from the conditions of this License. If you cannot distribute so as to satisfy simultaneously your obligations under this License and any other pertinent obligations, then as a consequence you may not distribute the Library at all. For example, if a patent license would not permit royalty-free redistribution of the Library by all those who receive copies directly or indirectly through you, then the only way you could satisfy both it and this License would be to refrain entirely from distribution of the Library.

If any portion of this section is held invalid or unenforceable under any particular circumstance, the balance of the section is intended to apply, and the section as a whole is intended to apply in other circumstances.

It is not the purpose of this section to induce you to infringe any patents or other property right claims or to contest validity of any such claims; this section has the sole purpose of protecting the integrity of the free software distribution system which is implemented by public license practices. Many people have made generous contributions to the wide range of software distributed through that system in reliance on consistent application of that system; it is up to the author/donor to decide if he or she is willing to distribute software through any other system and a licensee cannot impose that choice.

This section is intended to make thoroughly clear what is believed to be a consequence of the rest of this License.

12. If the distribution and/or use of the Library is restricted in certain countries either by patents or by copyrighted interfaces, the original copyright holder who places the Library under this License may add an explicit geographical distribution limitation excluding those countries, so that distribution is permitted only in or among countries not thus excluded. In such case, this License incorporates the limitation as if written in the body of this License.

13. The Free Software Foundation may publish revised and/or new versions of the Lesser General Public License from time to time. Such new versions will be similar in spirit to the present version, but may differ in detail to address new problems or concerns.

Each version is given a distinguishing version number. If the Library specifies a version number of this License which applies to it and "any later version", you have the option of following the terms and conditions either of that version or of any later version published by the Free Software Foundation. If the Library does not specify a license version number, you may choose any version ever published by the Free Software Foundation.

14. If you wish to incorporate parts of the Library into other free programs whose distribution conditions are incompatible with these, write to the author to ask for permission. For software which is copyrighted by the Free Software Foundation, write to the Free Software Foundation; we sometimes make exceptions for this. Our decision will be guided by the two goals of preserving the free status of all derivatives of our free software and of promoting the sharing and reuse of software generally.

NO WARRANTY

15. BECAUSE THE LIBRARY IS LICENSED FREE OF CHARGE, THERE IS NO WARRANTY FOR THE LIBRARY, TO THE EXTENT PERMITTED BY APPLICABLE LAW. EXCEPT WHEN OTHERWISE STATED IN WRITING THE COPYRIGHT HOLDERS AND/OR OTHER PARTIES PROVIDE THE LIBRARY "AS IS" WITHOUT WARRANTY OF ANY KIND, EITHER EXPRESSED OR IMPLIED, INCLUDING, BUT NOT LIMITED TO, THE IMPLIED WARRANTIES OF MERCHANTABILITY AND FITNESS FOR A PARTICULAR PURPOSE. THE ENTIRE RISK AS TO THE QUALITY AND PERFORMANCE OF THE LIBRARY IS WITH YOU. SHOULD THE LIBRARY PROVE DEFECTIVE, YOU ASSUME THE COST OF ALL NECESSARY SERVICING, REPAIR OR CORRECTION.

16. IN NO EVENT UNLESS REQUIRED BY APPLICABLE LAW OR AGREED TO IN WRITING WILL ANY COPYRIGHT HOLDER, OR ANY OTHER PARTY WHO MAY MODIFY AND/OR REDISTRIBUTE THE LIBRARY AS PERMITTED ABOVE, BE LIABLE TO YOU FOR DAMAGES, INCLUDING ANY GENERAL, SPECIAL, INCIDENTAL OR CONSEQUENTIAL DAMAGES ARISING OUT OF THE USE OR INABILITY TO USE THE LIBRARY (INCLUDING BUT NOT LIMITED TO LOSS OF DATA OR DATA BEING RENDERED INACCURATE OR LOSSES SUSTAINED BY YOU OR THIRD PARTIES OR A FAILURE OF THE LIBRARY TO OPERATE WITH ANY OTHER SOFTWARE), EVEN IF SUCH HOLDER OR OTHER PARTY HAS BEEN ADVISED OF THE POSSIBILITY OF SUCH DAMAGES.

END OF TERMS AND CONDITIONS

How to Apply These Terms to Your New Libraries

If you develop a new library, and you want it to be of the greatest possible use to the public, we recommend making it free software that everyone can redistribute and change. You can do so by permitting redistribution under these terms (or, alternatively, under the terms of the ordinary General Public License).

To apply these terms, attach the following notices to the library. It is safest to attach them to the start of each source file to most effectively convey the exclusion of warranty; and each file should have at least the "copyright" line and a pointer to where the full notice is found.

<one line to give the library's name and a brief idea of what it does.> Copyright (C) <year> <name of author>

This library is free software; you can redistribute it and/or modify it under the terms of the GNU Lesser General Public License as published by the Free Software Foundation; either version 2.1 of the License, or (at your option) any later version.

This library is distributed in the hope that it will be useful, but WITHOUT ANY WARRANTY; without even the implied warranty of MERCHANTABILITY or FITNESS FOR A PARTICULAR PURPOSE. See the GNU Lesser General Public License for more details.

You should have received a copy of the GNU Lesser General Public License along with this library; if not, write to the Free Software Foundation, Inc., 51 Franklin Street, Fifth Floor, Boston, MA 02110-1301 USA

Also add information on how to contact you by electronic and paper mail.

You should also get your employer (if you work as a programmer) or your school, if any, to sign a "copyright disclaimer" for the library, if necessary. Here is a sample; alter the names:

Yoyodyne, Inc., hereby disclaims all copyright interest in the library `Frob' (a library for tweaking knobs) written by James Random Hacker.

<signature of Ty Coon>, 1 April 1990 Ty Coon, President of Vice

That's all there is to it!

Apache License

Version 2.0, January 2004

http://www.apache.org/licenses/

TERMS AND CONDITIONS FOR USE, REPRODUCTION, AND DISTRIBUTION

1. Definitions.

"License" shall mean the terms and conditions for use, reproduction, and distribution as defined by Sections 1 through 9 of this document.

"Licensor" shall mean the copyright owner or entity authorized by the copyright owner that is granting the License.

"Legal Entity" shall mean the union of the acting entity and all other entities that control, are controlled by, or are under common control with that entity. For the purposes of this definition, "control" means (i) the power, direct or indirect, to cause the direction or management of such entity, whether by contract or otherwise, or (ii) ownership of fifty percent (50%) or more of the outstanding shares, or (iii) beneficial ownership of such entity.

"You" (or "Your") shall mean an individual or Legal Entity exercising permissions granted by this License.

"Source" form shall mean the preferred form for making modifications, including but not limited to software source code, documentation source, and configuration files.

"Object" form shall mean any form resulting from mechanical transformation or translation of a Source form, including but not limited to compiled object code, generated documentation, and conversions to other media types.

"Work" shall mean the work of authorship, whether in Source or Object form, made available under the License, as indicated by a copyright notice that is included in or attached to the work (an example is provided in the Appendix below).

"Derivative Works" shall mean any work, whether in Source or Object form, that is based on (or derived from) the Work and for which the editorial revisions, annotations, elaborations, or other modifications represent, as a whole, an original work of authorship. For the purposes of this License, Derivative Works shall not include works that remain separable from, or merely link (or bind by name) to the interfaces of, the Work and Derivative Works thereof.

"Contribution" shall mean any work of authorship, including the original version of the Work and any modifications or additions to that Work or Derivative Works thereof, that is intentionally submitted to Licensor for inclusion in the Work by the copyright owner or by an individual or Legal Entity authorized to submit on behalf of the copyright owner. For the purposes of this definition, "submitted" means any form of electronic, verbal, or written communication sent to the Licensor or its representatives, including but not limited to communication on electronic mailing lists, source code control systems, and issue tracking systems that are managed by, or on behalf of, the Licensor for the purpose of discussing and improving the Work, but excluding communication that is conspicuously marked or otherwise designated in writing by the copyright owner as "Not a Contribution."

"Contributor" shall mean Licensor and any individual or Legal Entity on behalf of whom a Contribution has been received by Licensor and subsequently incorporated within the Work.

2. Grant of Copyright License. Subject to the terms and conditions of this License, each Contributor hereby grants to You a perpetual, worldwide, non-exclusive, no-charge, royalty-free, irrevocable copyright license to reproduce, prepare Derivative Works of, publicly display, publicly perform, sublicense, and distribute the Work and such Derivative Works in Source or Object form.

3. Grant of Patent License. Subject to the terms and conditions of this License, each Contributor hereby grants to You a perpetual, worldwide, non-exclusive, no-charge, royalty-free, irrevocable (except as stated in this section) patent license to make, have made, use, offer to sell, sell, import, and otherwise transfer the Work, where such license applies only to those patent claims licensable by such Contributor that are necessarily infringed by their Contribution(s) alone or by combination of their Contribution(s) with the Work to which such Contribution(s) was submitted. If You institute patent litigation against any entity (including a cross-claim or counterclaim in a lawsuit) alleging that the Work or a Contribution incorporated within the Work constitutes direct or contributory patent infringement, then any patent licenses granted to You under this License for that Work shall terminate as of the date such litigation is filed.

4. Redistribution. You may reproduce and distribute copies of the Work or Derivative Works thereof in any medium, with or without modifications, and in Source or Object form, provided that You meet the following conditions:

(a) You must give any other recipients of the Work or Derivative Works a copy of this License; and

(b) You must cause any modified files to carry prominent notices stating that You changed the files; and

(c) You must retain, in the Source form of any Derivative Works that You distribute, all copyright, patent, trademark, and attribution notices from the Source form of the Work, excluding those notices that do not pertain to any part of the Derivative Works; and

(d) If the Work includes a "NOTICE" text file as part of its distribution, then any Derivative Works that You distribute must include a readable copy of the attribution notices contained within such NOTICE file, excluding those notices that do not pertain to any part of the Derivative Works, in at least one of the following places: within a NOTICE text file distributed as part of the Derivative Works; within the Source form or documentation, if provided along with the Derivative Works; or, within a display generated by the Derivative Works, if and wherever such third-party notices normally appear. The contents of the NOTICE file are for informational purposes only and do not modify the License. You may add Your own attribution notices within Derivative Works that You distribute, alongside or as an addendum to the NOTICE text from the Work, provided that such additional attribution notices cannot be construed as modifying the License.

You may add Your own copyright statement to Your modifications and may provide additional or different license terms and conditions for use, reproduction, or distribution of Your modifications, or for any such Derivative Works as a whole, provided Your use, reproduction, and distribution of the Work otherwise complies with the conditions stated in this License.

5. Submission of Contributions. Unless You explicitly state otherwise, any Contribution intentionally submitted for inclusion in the Work by You to the Licensor shall be under the terms and conditions of this License, without any additional terms or conditions. Notwithstanding the above, nothing herein shall supersede or modify the terms of any separate license agreement you may have executed with Licensor regarding such Contributions.

6. Trademarks. This License does not grant permission to use the trade names, trademarks, service marks, or product names of the Licensor, except as required for reasonable and customary use in describing the origin of the Work and reproducing the content of the NOTICE file.

7. Disclaimer of Warranty. Unless required by applicable law or agreed to in writing, Licensor provides the Work (and each Contributor provides its Contributions) on an "AS IS" BASIS, WITHOUT WARRANTIES OR CONDITIONS OF ANY KIND, either express or implied, including, without limitation, any warranties or conditions of TITLE, NON-INFRINGEMENT, MERCHANTABILITY, or FITNESS FOR A PARTICULAR PURPOSE. You are solely responsible for determining the appropriateness of using or redistributing the Work and assume any risks associated with Your exercise of permissions under this License.

8. Limitation of Liability. In no event and under no legal theory, whether in tort (including negligence), contract, or otherwise, unless required by applicable law (such as deliberate and grossly negligent acts) or agreed to in writing, shall any Contributor be liable to You for damages, including any direct, indirect, special, incidental, or consequential damages of any character arising as a result of this License or out of the use or inability to use the Work (including but not limited to damages for loss of goodwill, work

stoppage, computer failure or malfunction, or any and all other commercial damages or losses), even if such Contributor has been advised of the possibility of such damages.

9. Accepting Warranty or Additional Liability. While redistributing the Work or Derivative Works thereof, You may choose to offer, and charge a fee for, acceptance of support, warranty, indemnity, or other liability obligations and/or rights consistent with this License. However, in accepting such obligations, You may act only on Your own behalf and on Your sole responsibility, not on behalf of any other Contributor, and only if You agree to indemnify, defend, and hold each Contributor harmless for any liability incurred by, or claims asserted against, such Contributor by reason of your accepting any such warranty or additional liability.

END OF TERMS AND CONDITIONS

APPENDIX: How to apply the Apache License to your work.

To apply the Apache License to your work, attach the following boilerplate notice, with the fields enclosed by brackets "[]" replaced with your own identifying information. (Don't include the brackets!) The text should be enclosed in the appropriate comment syntax for the file format. We also recommend that a file or class name and description of purpose be included on the same "printed page" as the copyright notice for easier identification within third-party archives.

Copyright [yyyy] [name of copyright owner]

Licensed under the Apache License, Version 2.0 (the "License"); you may not use this file except in compliance with the License. You may obtain a copy of the License at

http://www.apache.org/licenses/LICENSE-2.0

Unless required by applicable law or agreed to in writing, software distributed under the License is distributed on an "AS IS" BASIS, WITHOUT WARRANTIES OR CONDITIONS OF ANY KIND, either express or implied. See the License for the specific language governing permissions and limitations under the License.

Copyright (c) 2003-2004, Apple Computer, Inc. All rights reserved.

Redistribution and use in source and binary forms, with or without modification, are permitted provided that the following conditions are met:

1. Redistributions of source code must retain the above copyright notice, this list of conditions and the following disclaimer.

2. Redistributions in binary form must reproduce the above copyright notice, this list of conditions and the following disclaimer in the documentation and/or other materials provided with the distribution.

3. Neither the name of Apple Computer, Inc. ("Apple") nor the names of its contributors may be used to endorse or promote products derived from this software without specific prior written permission.

THIS SOFTWARE IS PROVIDED BY APPLE AND ITS CONTRIBUTORS "AS IS" AND ANY EXPRESS OR IMPLIED WARRANTIES, INCLUDING, BUT NOT LIMITED TO, THE IMPLIED WARRANTIES OF MERCHANTABILITY AND FITNESS FOR A PARTICULAR PURPOSE ARE DISCLAIMED. IN NO EVENT SHALL APPLE OR ITS CONTRIBUTORS BE LIABLE FOR ANY DIRECT, INDIRECT, INCIDENTAL, SPECIAL, EXEMPLARY, OR CONSEQUENTIAL DAMAGES (INCLUDING, BUT NOT LIMITED TO, PROCUREMENT OF SUBSTITUTE GOODS OR SERVICES; LOSS OF USE, DATA, OR PROFITS; OR BUSINESS INTERRUPTION) HOWEVER CAUSED AND ON ANY THEORY OF LIABILITY, WHETHER IN CONTRACT, STRICT LIABILITY, OR TORT (INCLUDING NEGLIGENCE OR OTHERWISE) ARISING IN ANY WAY OUT OF THE USE OF THIS SOFTWARE, EVEN IF ADVISED OF THE POSSIBILITY OF SUCH DAMAGE.

---- Part 1: CMU/UCD copyright notice: (BSD like) -----

Copyright 1989, 1991, 1992 by Carnegie Mellon University

Derivative Work - 1996, 1998-2000

Copyright 1996, 1998-2000 The Regents of the University of California

All Rights Reserved

Permission to use, copy, modify and distribute this software and its documentation for any purpose and without fee is hereby granted, provided that the above copyright notice appears in all copies and that both that copyright notice and this permission notice appear in supporting documentation, and that the name of CMU and The Regents of the University of California not be used in advertising or publicity pertaining to distribution of the software without specific written permission.

CMU AND THE REGENTS OF THE UNIVERSITY OF CALIFORNIA DISCLAIM ALL WARRANTIES WITH REGARD TO THIS SOFTWARE, INCLUDING ALL IMPLIED WARRANTIES OF MERCHANTABILITY AND FITNESS. IN NO EVENT SHALL CMU OR THE REGENTS OF THE UNIVERSITY OF CALIFORNIA BE LIABLE FOR ANY SPECIAL, INDIRECT OR CONSEQUENTIAL DAMAGES OR ANY DAMAGES WHATSOEVER RESULTING FROM THE LOSS OF USE, DATA OR PROFITS, WHETHER IN AN ACTION OF CONTRACT, NEGLIGENCE OR OTHER TORTIOUS ACTION, ARISING OUT OF OR IN CONNECTION WITH THE USE OR PERFORMANCE OF THIS SOFTWARE.

---- Part 2: Networks Associates Technology, Inc copyright notice (BSD) -----

Copyright (c) 2001-2003, Networks Associates Technology, Inc All rights reserved.

Redistribution and use in source and binary forms, with or without modification, are permitted provided that the following conditions are met:

* Redistributions of source code must retain the above copyright notice, this list of conditions and the following disclaimer.

* Redistributions in binary form must reproduce the above copyright notice, this list of conditions and the following disclaimer in the documentation and/or other materials provided with the distribution.

* Neither the name of the Networks Associates Technology, Inc nor the names of its contributors may be used to endorse or promote products derived from this software without specific prior written permission.

THIS SOFTWARE IS PROVIDED BY THE COPYRIGHT HOLDERS AND CONTRIBUTORS "AS IS" AND ANY EXPRESS OR IMPLIED WARRANTIES, INCLUDING, BUT NOT LIMITED TO, THE IMPLIED WARRANTIES OF MERCHANTABILITY AND FITNESS FOR A PARTICULAR PURPOSE ARE DISCLAIMED. IN NO EVENT SHALL THE COPYRIGHT HOLDERS OR CONTRIBUTORS BE LIABLE FOR ANY DIRECT, INDIRECT, INCIDENTAL, SPECIAL, EXEMPLARY, OR CONSEQUENTIAL DAMAGES (INCLUDING, BUT NOT LIMITED TO, PROCUREMENT OF SUBSTITUTE GOODS OR SERVICES; LOSS OF USE, DATA, OR PROFITS; OR BUSINESS INTERRUPTION) HOWEVER CAUSED AND ON ANY THEORY OF LIABILITY, WHETHER IN CONTRACT, STRICT LIABILITY, OR TORT (INCLUDING NEGLIGENCE OR OTHERWISE) ARISING IN ANY WAY OUT OF THE USE OF THIS SOFTWARE, EVEN IF ADVISED OF THE POSSIBILITY OF SUCH DAMAGE.

---- Part 3: Cambridge Broadband Ltd. copyright notice (BSD) -----

Portions of this code are copyright (c) 2001-2003, Cambridge Broadband Ltd. All rights reserved.

Redistribution and use in source and binary forms, with or without modification, are permitted provided that the following conditions are met:

* Redistributions of source code must retain the above copyright notice, this list of conditions and the following disclaimer.

* Redistributions in binary form must reproduce the above copyright notice, this list of conditions and the following disclaimer in the documentation and/or other materials provided with the distribution.

* The name of Cambridge Broadband Ltd. may not be used to endorse or promote products derived from this software without specific prior written permission.

THIS SOFTWARE IS PROVIDED BY THE COPYRIGHT HOLDER "AS IS" AND ANY EXPRESS OR IMPLIED WARRANTIES, INCLUDING, BUT NOT LIMITED TO, THE IMPLIED WARRANTIES OF MERCHANTABILITY AND FITNESS FOR A PARTICULAR PURPOSE ARE DISCLAIMED. IN NO EVENT SHALL THE COPYRIGHT HOLDER BE LIABLE FOR ANY DIRECT, INDIRECT, INCIDENTAL, SPECIAL, EXEMPLARY, OR CONSEQUENTIAL DAMAGES (INCLUDING, BUT NOT LIMITED TO, PROCUREMENT OF SUBSTITUTE GOODS OR SERVICES; LOSS OF USE, DATA, OR PROFITS; OR BUSINESS INTERRUPTION) HOWEVER CAUSED AND ON ANY THEORY OF LIABILITY, WHETHER IN CONTRACT, STRICT LIABILITY, OR TORT (INCLUDING NEGLIGENCE OR OTHERWISE) ARISING IN ANY WAY OUT OF THE USE OF THIS SOFTWARE, EVEN IF ADVISED OF THE POSSIBILITY OF SUCH DAMAGE.

---- Part 4: Sun Microsystems, Inc. copyright notice (BSD) -----

Copyright © 2003 Sun Microsystems, Inc., 4150 Network Circle, Santa Clara, California 95054, U.S.A. All rights reserved.

Use is subject to license terms below.

This distribution may include materials developed by third parties.

Sun, Sun Microsystems, the Sun logo and Solaris are trademarks or registered trademarks of Sun Microsystems, Inc. in the U.S. and other countries.

Redistribution and use in source and binary forms, with or without modification, are permitted provided that the following conditions are met:

* Redistributions of source code must retain the above copyright notice, this list of conditions and the following disclaimer.

* Redistributions in binary form must reproduce the above copyright notice, this list of conditions and the following disclaimer in the documentation and/or other materials provided with the distribution.

* Neither the name of the Sun Microsystems, Inc. nor the names of its contributors may be used to endorse or promote products derived from this software without specific prior written permission.

THIS SOFTWARE IS PROVIDED BY THE COPYRIGHT HOLDERS AND CONTRIBUTORS "AS IS" AND ANY EXPRESS OR IMPLIED WARRANTIES, INCLUDING, BUT NOT LIMITED TO, THE IMPLIED WARRANTIES OF MERCHANTABILITY AND FITNESS FOR A PARTICULAR PURPOSE ARE DISCLAIMED. IN NO EVENT SHALL THE COPYRIGHT HOLDERS OR CONTRIBUTORS BE LIABLE FOR ANY DIRECT, INDIRECT, INCIDENTAL, SPECIAL, EXEMPLARY, OR CONSEQUENTIAL DAMAGES (INCLUDING, BUT NOT LIMITED TO, PROCUREMENT OF SUBSTITUTE GOODS OR SERVICES; LOSS OF USE, DATA, OR PROFITS; OR BUSINESS INTERRUPTION) HOWEVER CAUSED AND ON ANY THEORY OF LIABILITY, WHETHER IN CONTRACT, STRICT LIABILITY, OR TORT (INCLUDING NEGLIGENCE OR OTHERWISE) ARISING IN ANY WAY OUT OF THE USE OF THIS SOFTWARE, EVEN IF ADVISED OF THE POSSIBILITY OF SUCH DAMAGE.

---- Part 5: Sparta, Inc copyright notice (BSD) -----

Copyright (c) 2003-2004, Sparta, Inc All rights reserved.

Redistribution and use in source and binary forms, with or without modification, are permitted provided that the following conditions are met:

* Redistributions of source code must retain the above copyright notice, this list of conditions and the following disclaimer.

* Redistributions in binary form must reproduce the above copyright notice, this list of conditions and the following disclaimer in the documentation and/or other materials provided with the distribution.

* Neither the name of Sparta, Inc nor the names of its contributors may be used to endorse or promote products derived from this software without specific prior written permission.

THIS SOFTWARE IS PROVIDED BY THE COPYRIGHT HOLDERS AND CONTRIBUTORS "AS IS" AND ANY EXPRESS OR IMPLIED WARRANTIES, INCLUDING, BUT NOT LIMITED TO, THE IMPLIED WARRANTIES OF MERCHANTABILITY AND FITNESS FOR A PARTICULAR PURPOSE ARE DISCLAIMED. IN NO EVENT SHALL THE COPYRIGHT HOLDERS OR CONTRIBUTORS BE LIABLE FOR ANY DIRECT, INDIRECT, INCIDENTAL, SPECIAL, EXEMPLARY, OR CONSEQUENTIAL DAMAGES (INCLUDING, BUT NOT LIMITED TO, PROCUREMENT OF SUBSTITUTE GOODS OR SERVICES; LOSS OF USE, DATA, OR PROFITS; OR BUSINESS INTERRUPTION) HOWEVER CAUSED AND ON ANY THEORY OF LIABILITY, WHETHER IN CONTRACT, STRICT LIABILITY, OR TORT (INCLUDING NEGLIGENCE OR OTHERWISE) ARISING IN ANY WAY OUT OF THE USE OF THIS SOFTWARE, EVEN IF ADVISED OF THE POSSIBILITY OF SUCH DAMAGE.

LICENSE ISSUES

==========

The OpenSSL toolkit stays under a dual license, i.e. both the conditions of the OpenSSL License and the original SSLeay license apply to the toolkit. See below for the actual license texts. Actually both licenses are BSD-style Open Source licenses. In case of any license issues related to OpenSSL please contact openssl-core@openssl.org.

OpenSSL License

---

Copyright (c) 1998-2011 The OpenSSL Project. All rights reserved.

Redistribution and use in source and binary forms, with or without modification, are permitted provided that the following conditions are met:

1. Redistributions of source code must retain the above copyright notice, this list of conditions and the following disclaimer.

2. Redistributions in binary form must reproduce the above copyright notice, this list of conditions and the following disclaimer in the documentation and/or other materials provided with the distribution.

3. All advertising materials mentioning features or use of this software must display the following acknowledgment: "This product includes software developed by the OpenSSL Project for use in the OpenSSL Toolkit. (http://www.openssl.org/)"

4. The names "OpenSSL Toolkit" and "OpenSSL Project" must not be used to endorse or promote products derived from this software without prior written permission. For written permission, please contact openssl-core@openssl.org.

5. Products derived from this software may not be called "OpenSSL" nor may "OpenSSL" appear in their names without prior written permission of the OpenSSL Project.

6. Redistributions of any form whatsoever must retain the following acknowledgment: "This product includes software developed by the OpenSSL Project for use in the OpenSSL Toolkit (http://www.openssl.org/)"

THIS SOFTWARE IS PROVIDED BY THE OpenSSL PROJECT "AS IS" AND ANY EXPRESSED OR IMPLIED WARRANTIES, INCLUDING, BUT NOT LIMITED TO, THE IMPLIED WARRANTIES OF MERCHANTABILITY AND FITNESS FOR A PARTICULAR PURPOSE ARE DISCLAIMED. IN NO EVENT SHALL THE OpenSSL PROJECT OR ITS CONTRIBUTORS BE LIABLE FOR ANY DIRECT, INDIRECT, INCIDENTAL, SPECIAL, EXEMPLARY, OR CONSEQUENTIAL DAMAGES (INCLUDING, BUT NOT LIMITED TO, PROCUREMENT OF SUBSTITUTE GOODS OR SERVICES; LOSS OF USE, DATA, OR PROFITS; OR BUSINESS INTERRUPTION) HOWEVER CAUSED AND ON ANY THEORY OF LIABILITY, WHETHER IN CONTRACT, STRICT LIABILITY, OR TORT (INCLUDING NEGLIGENCE OR OTHERWISE) ARISING IN ANY WAY OUT OF THE USE OF THIS SOFTWARE, EVEN IF ADVISED OF THE POSSIBILITY OF SUCH DAMAGE.

==========

This product includes cryptographic software written by Eric Young (eay@cryptsoft.com). This product includes software written by Tim Hudson (tjh@cryptsoft.com).

Original SSLeay License

---

Copyright (C) 1995-1998 Eric Young (eay@cryptsoft.com) All rights reserved.

This package is an SSL implementation written by Eric Young (eay@cryptsoft.com). The implementation was written so as to conform with Netscapes SSL.

This library is free for commercial and non-commercial use as long as the following conditions are aheared to. The following conditions apply to all code found in this distribution, be it the RC4, RSA, lhash, DES, etc., code; not just the SSL code. The SSL documentation included with this distribution is covered by the same copyright terms except that the holder is Tim Hudson (tjh@cryptsoft.com).

Copyright remains Eric Young's, and as such any Copyright notices in the code are not to be removed. If this package is used in a product, Eric Young should be given attribution as the author of the parts of the library used. This can be in the form of a textual message at program startup or in documentation (online or textual) provided with the package.

Redistribution and use in source and binary forms, with or without modification, are permitted provided that the following conditions are met:

1. Redistributions of source code must retain the copyright notice, this list of conditions and the following disclaimer.

2. Redistributions in binary form must reproduce the above copyright notice, this list of conditions and the following disclaimer in the documentation and/or other materials provided with the distribution.

3. All advertising materials mentioning features or use of this software must display the following acknowledgement: "This product includes cryptographic software written by Eric Young (eay@cryptsoft.com)" The word 'cryptographic' can be left out if the rouines from the library being used are not cryptographic related :-).

4. If you include any Windows specific code (or a derivative thereof) from the apps directory (application code) you must include an acknowledgement: "This product includes software written by Tim Hudson (tjh@cryptsoft.com)"

THIS SOFTWARE IS PROVIDED BY ERIC YOUNG "AS IS" AND ANY EXPRESS OR IMPLIED WARRANTIES, INCLUDING, BUT NOT LIMITED TO, THE IMPLIED WARRANTIES OF MERCHANTABILITY AND FITNESS FOR A PARTICULAR PURPOSE ARE DISCLAIMED. IN NO EVENT SHALL THE AUTHOR OR CONTRIBUTORS BE LIABLE FOR ANY DIRECT, INDIRECT, INCIDENTAL, SPECIAL, EXEMPLARY, OR CONSEQUENTIAL DAMAGES (INCLUDING, BUT NOT LIMITED TO, PROCUREMENT OF SUBSTITUTE GOODS OR SERVICES; LOSS OF USE, DATA, OR PROFITS; OR BUSINESS INTERRUPTION) HOWEVER CAUSED AND ON ANY THEORY OF LIABILITY, WHETHER IN CONTRACT, STRICT LIABILITY, OR TORT (INCLUDING NEGLIGENCE OR OTHERWISE) ARISING IN ANY WAY OUT OF THE USE OF THIS SOFTWARE, EVEN IF ADVISED OF THE POSSIBILITY OF SUCH DAMAGE.

The licence and distribution terms for any publically available version or derivative of this code cannot be changed. i.e. this code cannot simply be copied and put under another distribution licence [including the GNU Public Licence.]

Copyright 2002 Sun Microsystems, Inc. ALL RIGHTS RESERVED. ECC cipher suite support in OpenSSL originally developed by SUN MICROSYSTEMS, INC., and contributed to the OpenSSL project.

Copyright 2005 Nokia. All rights reserved.

The portions of the attached software ("Contribution") is developed by Nokia Corporation and is licensed pursuant to the OpenSSL open source license.

The Contribution, originally written by Mika Kousa and Pasi Eronen of Nokia Corporation, consists of the "PSK" (Pre-Shared Key) ciphersuites support (see RFC 4279) to OpenSSL.

No patent licenses or other rights except those expressly stated in the OpenSSL open source license shall be deemed granted or received expressly, by implication, estoppel, or otherwise.

No assurances are provided by Nokia that the Contribution does not infringe the patent or other intellectual property rights of any third party or that the license provides you with all the necessary rights to make use of the Contribution.

THE SOFTWARE IS PROVIDED "AS IS" WITHOUT WARRANTY OF ANY KIND. IN ADDITION TO THE DISCLAIMERS INCLUDED IN THE LICENSE, NOKIA SPECIFICALLY DISCLAIMS ANY

LIABILITY FOR CLAIMS BROUGHT BY YOU OR ANY OTHER ENTITY BASED ON INFRINGEMENT OF INTELLECTUAL PROPERTY RIGHTS OR OTHERWISE.

Portions of the attached software ("Contribution") are developed by SUN MICROSYSTEMS, INC., and are contributed to the OpenSSL project.

Copyright (c) 2004, Richard Levitte <richard@levitte.org> All rights reserved.

Redistribution and use in source and binary forms, with or without modification, are permitted provided that the following conditions are met:

1. Redistributions of source code must retain the above copyright notice, this list of conditions and the following disclaimer.

2. Redistributions in binary form must reproduce the above copyright notice, this list of conditions and the following disclaimer in the documentation and/or other materials provided with the distribution.

THIS SOFTWARE IS PROVIDED BY THE REGENTS AND CONTRIBUTORS "AS IS" AND ANY EXPRESS OR IMPLIED WARRANTIES, INCLUDING, BUT NOT LIMITED TO, THE IMPLIED WARRANTIES OF MERCHANTABILITY AND FITNESS FOR A PARTICULAR PURPOSE ARE DISCLAIMED. IN NO EVENT SHALL THE REGENTS OR CONTRIBUTORS BE LIABLE FOR ANY DIRECT, INDIRECT, INCIDENTAL, SPECIAL, EXEMPLARY, OR CONSEQUENTIAL DAMAGES (INCLUDING, BUT NOT LIMITED TO, PROCUREMENT OF SUBSTITUTE GOODS OR SERVICES; LOSS OF USE, DATA, OR PROFITS; OR BUSINESS INTERRUPTION) HOWEVER CAUSED AND ON ANY THEORY OF LIABILITY, WHETHER IN CONTRACT, STRICT LIABILITY, OR TORT (INCLUDING NEGLIGENCE OR OTHERWISE) ARISING IN ANY WAY OUT OF THE USE OF THIS SOFTWARE, EVEN IF ADVISED OF THE POSSIBILITY OF SUCH DAMAGE.

Sun RPC is a product of Sun Microsystems, Inc. and is provided for unrestricted use provided that this legend is included on all tape media and as a part of the software program in whole or part. Users may copy or modify Sun RPC without charge, but are not authorized to license or distribute it to anyone else except as part of a product or program developed by the user.

SUN RPC IS PROVIDED AS IS WITH NO WARRANTIES OF ANY KIND INCLUDING THE WARRANTIES OF DESIGN, MERCHANTIBILITY AND FITNESS FOR A PARTICULAR PURPOSE, OR ARISING FROM A COURSE OF DEALING, USAGE OR TRADE PRACTICE.

Sun RPC is provided with no support and without any obligation on the part of Sun Microsystems, Inc. to assist in its use, correction, modification or enhancement.

SUN MICROSYSTEMS, INC. SHALL HAVE NO LIABILITY WITH RESPECT TO THE INFRINGEMENT OF COPYRIGHTS, TRADE SECRETS OR ANY PATENTS BY SUN RPC OR ANY PART THEREOF.

In no event will Sun Microsystems, Inc. be liable for any lost revenue or profits or other special, indirect and consequential damages, even if Sun has been advised of the possibility of such damages.

Sun Microsystems, Inc. 2550 Garcia Avenue Mountain View, California 94043

Generic DES driver interface

Keep this file hardware independent!

Copyright (c) 1986 by Sun Microsystems, Inc.

Copyright 2002 Sun Microsystems, Inc. ALL RIGHTS RESERVED.

The Elliptic Curve Public-Key Crypto Library (ECC Code) included herein is developed by SUN MICROSYSTEMS, INC., and is contributed to the OpenSSL project.

The ECC Code is licensed pursuant to the OpenSSL open source license provided below.

In addition, Sun covenants to all licensees who provide a reciprocal covenant with respect to their own patents if any, not to sue under current and future patent claims necessarily infringed by the making, using, practicing, selling, offering for sale and/or otherwise disposing of the ECC Code as delivered hereunder (or portions thereof), provided that such covenant shall not apply:

1) for code that a licensee deletes from the ECC Code;

2) separates from the ECC Code; or

3) for infringements caused by:

i) the modification of the ECC Code or

ii) the combination of the ECC Code with other software or devices where such combination causes the infringement.

The software is originally written by Sheueling Chang Shantz and Douglas Stebila of Sun Microsystems Laboratories.

NOTE: This file is licensed pursuant to the OpenSSL license below and may be modified; but after modifications, the above covenant may no longer apply! In such cases, the corresponding paragraph ["In addition, Sun covenants ... causes the infringement."] and this note can be edited out; but please keep the Sun copyright notice and attribution.

Copyright Patrick Powell 1995

This code is based on code written by Patrick Powell <papowell@astart.com> It may be used for any purpose as long as this notice remains intact on all source code distributions.

This code contains numerious changes and enhancements which were made by lots of contributors over the last years to Patrick Powell's original code:

o Patrick Powell <papowell@astart.com> (1995)

o Brandon Long <blong@fiction.net> (1996, for Mutt)

o Thomas Roessler <roessler@guug.de> (1998, for Mutt)

o Michael Elkins <me@cs.hmc.edu> (1998, for Mutt)

o Andrew Tridgell <tridge@samba.org> (1998, for Samba)

o Luke Mewburn <lukem@netbsd.org> (1999, for LukemFTP)

o Ralf S. Engelschall <rse@engelschall.com> (1999, for Pth)

o ... (for OpenSSL)

Copyright (c) 2010-2010 Intel Corp.

Author: Vinodh.Gopal@intel.com

Jim Guilford

Erdinc.Ozturk@intel.com

Maxim.Perminov@intel.com

Ying.Huang@intel.com

Copyright (c) 2002 Bob Beck <beck@openbsd.org>

Copyright (c) 2002 Theo de Raadt

Copyright (c) 2002 Markus Friedl

All rights reserved.

Redistribution and use in source and binary forms, with or without modification, are permitted provided that the following conditions are met:

1. Redistributions of source code must retain the above copyright notice, this list of conditions and the following disclaimer.

2. Redistributions in binary form must reproduce the above copyright notice, this list of conditions and the following disclaimer in the documentation and/or other materials provided with the distribution.

THIS SOFTWARE IS PROVIDED BY THE AUTHOR AND CONTRIBUTORS "AS IS" AND ANY EXPRESS OR IMPLIED WARRANTIES, INCLUDING, BUT NOT LIMITED TO, THE IMPLIED WARRANTIES OF MERCHANTABILITY AND FITNESS FOR A PARTICULAR PURPOSE ARE DISCLAIMED. IN NO EVENT SHALL THE AUTHOR OR CONTRIBUTORS BE LIABLE FOR ANY DIRECT, INDIRECT, INCIDENTAL, SPECIAL, EXEMPLARY, OR CONSEQUENTIAL DAMAGES (INCLUDING, BUT NOT LIMITED TO, PROCUREMENT OF SUBSTITUTE GOODS OR SERVICES; LOSS OF USE, DATA, OR PROFITS; OR BUSINESS INTERRUPTION) HOWEVER CAUSED AND ON ANY THEORY OF LIABILITY, WHETHER IN CONTRACT, STRICT LIABILITY, OR TORT (INCLUDING NEGLIGENCE OR OTHERWISE) ARISING IN ANY WAY OUT OF THE USE OF THIS SOFTWARE, EVEN IF ADVISED OF THE POSSIBILITY OF SUCH DAMAGE.

Copyright 2011 Google Inc.

Licensed under the Apache License, Version 2.0 (the "License");

you may not use this file except in compliance with the License. You may obtain a copy of the License at

http://www.apache.org/licenses/LICENSE-2.0

Unless required by applicable law or agreed to in writing, software distributed under the License is distributed on an "AS IS" BASIS, WITHOUT WARRANTIES OR CONDITIONS OF ANY KIND, either express or implied. See the License for the specific language governing permissions and limitations under the License.

Created 960901 by Gertjan van Oosten, gertjan@West.NL, West Consulting B.V.

Code adapted from

<URL:http://support.microsoft.com/default.aspx?scid=kb;[LN];97193>;

the original copyright message is:

(C) Copyright Microsoft Corp. 1993. All rights reserved.

You have a royalty-free right to use, modify, reproduce and distribute the Sample Files (and/or any modified version) in any way you find useful, provided that you agree that Microsoft has no warranty obligations or liability for any Sample Application Files which are modified.

Copyright (c) 2004 Kungliga Tekniska Högskolan

(Royal Institute of Technology, Stockholm, Sweden).

All rights reserved.

Redistribution and use in source and binary forms, with or without modification, are permitted provided that the following conditions are met:

1. Redistributions of source code must retain the above copyright notice, this list of conditions and the following disclaimer.

2. Redistributions in binary form must reproduce the above copyright notice, this list of conditions and the following disclaimer in the documentation and/or other materials provided with the distribution.

3. Neither the name of the Institute nor the names of its contributors may be used to endorse or promote products derived from this software without specific prior written permission.

THIS SOFTWARE IS PROVIDED BY THE INSTITUTE AND CONTRIBUTORS "AS IS" AND ANY EXPRESS OR IMPLIED WARRANTIES, INCLUDING, BUT NOT LIMITED TO, THE IMPLIED WARRANTIES OF MERCHANTABILITY AND FITNESS FOR A PARTICULAR PURPOSE ARE DISCLAIMED. IN NO EVENT SHALL THE INSTITUTE OR CONTRIBUTORS BE LIABLE FOR ANY DIRECT, INDIRECT, INCIDENTAL, SPECIAL, EXEMPLARY, OR CONSEQUENTIAL DAMAGES (INCLUDING, BUT NOT LIMITED TO, PROCUREMENT OF SUBSTITUTE GOODS OR SERVICES; LOSS OF USE, DATA, OR PROFITS; OR BUSINESS INTERRUPTION) HOWEVER CAUSED AND ON ANY THEORY OF LIABILITY, WHETHER IN CONTRACT, STRICT LIABILITY, OR TORT (INCLUDING

NEGLIGENCE OR OTHERWISE) ARISING IN ANY WAY OUT OF THE USE OF THIS SOFTWARE, EVEN IF ADVISED OF THE POSSIBILITY OF SUCH DAMAGE.

Copyright 2005 Nokia. All rights reserved.

The portions of the attached software ("Contribution") is developed by Nokia Corporation and is licensed pursuant to the OpenSSL open source license.

The Contribution, originally written by Mika Kousa and Pasi Eronen of Nokia Corporation, consists of the "PSK" (Pre-Shared Key) ciphersuites support (see RFC 4279) to OpenSSL.

No patent licenses or other rights except those expressly stated in the OpenSSL open source license shall be deemed granted or received expressly, by implication, estoppel, or otherwise.

No assurances are provided by Nokia that the Contribution does not infringe the patent or other intellectual property rights of any third party or that the license provides you with all the necessary rights to make use of the Contribution.

THE SOFTWARE IS PROVIDED "AS IS" WITHOUT WARRANTY OF ANY KIND. IN ADDITION TO THE DISCLAIMERS INCLUDED IN THE LICENSE, NOKIA SPECIFICALLY DISCLAIMS ANY LIABILITY FOR CLAIMS BROUGHT BY YOU OR ANY OTHER ENTITY BASED ON INFRINGEMENT OF INTELLECTUAL PROPERTY RIGHTS OR OTHERWISE.

Copyright (C) 2006, Network Resonance, Inc.

Copyright (C) 2011, RTFM, Inc.

Copyright@2001 Baltimore Technologies Ltd.

THIS FILE IS PROVIDED BY BALTIMORE TECHNOLOGIES "AS IS" AND ANY EXPRESS OR IMPLIED WARRANTIES, INCLUDING, BUT NOT LIMITED TO, THE IMPLIED WARRANTIES OF MERCHANTABILITY AND FITNESS FOR A PARTICULAR PURPOSE ARE DISCLAIMED. IN NO EVENT SHALL BALTIMORE TECHNOLOGIES BE LIABLE FOR ANY DIRECT, INDIRECT, INCIDENTAL, SPECIAL, EXEMPLARY, OR CONSEQUENTIAL DAMAGES (INCLUDING, BUT NOT LIMITED TO, PROCUREMENT OF SUBSTITUTE GOODS OR SERVICES; LOSS OF USE, DATA, OR PROFITS; OR BUSINESS INTERRUPTION) HOWEVER CAUSED AND ON ANY THEORY OF LIABILITY, WHETHER IN CONTRACT, STRICT LIABILITY, OR TORT (INCLUDING NEGLIGENCE OR OTHERWISE) ARISING IN ANY WAY OUT OF THE USE OF THIS SOFTWARE, EVEN IF ADVISED OF THE POSSIBILITY OF SUCH DAMAGE.

Copyright 2000 Broadcom Corporation

This file is Copyright 1998-2000 nCipher Corporation Limited.

Redistribution and use in source and binary forms, with opr without modification, are permitted provided that the following conditions are met:

1. Redistributions of source code must retain the copyright notice, this list of conditions, and the following disclaimer.

2. Redistributions in binary form must reproduce the above copyright notice, this list of conditions, and the following disclaimer, in the documentation and/or other materials provided with the distribution

IN NO EVENT SHALL NCIPHER CORPORATION LIMITED (`NCIPHER') AND/OR ANY OTHER AUTHORS OR DISTRIBUTORS OF THIS FILE BE LIABLE for any damages arising directly or indirectly from this file, its use or this licence. Without prejudice to the generality of the foregoing: all liability shall be excluded for direct, indirect, special, incidental, consequential or other damages or any loss of profits, business, revenue goodwill or anticipated savings; liability shall be excluded even if nCipher or anyone else has been advised of the possibility of damage. In any event, if the exclusion of liability is not effective, the liability of nCipher or any author or distributor shall be limited to the lesser of the price paid and 1,000 pounds sterling. This licence only fails to exclude or limit liability for death or personal injury arising out of negligence, and only to the extent that such an exclusion or limitation is not effective.

NCIPHER AND THE AUTHORS AND DISTRIBUTORS SPECIFICALLY DISCLAIM ALL AND ANY WARRANTIES (WHETHER EXPRESS OR IMPLIED), including, but not limited to, any implied warranties of merchantability, fitness for a particular purpose, satisfactory quality, and/or non-infringement of any third party rights.

US Government use: This software and documentation is Commercial Computer Software and Computer Software Documentation, as defined in sub-paragraphs (a)(1) and (a)(5) of DFAR 252.227-7014, "Rights in Noncommercial Computer Software and Noncommercial Computer Software Documentation." Use, duplication or disclosure by the Government is subject to the terms and conditions specified here.

By using or distributing this file you will be accepting these terms and conditions, including the limitation of liability and lack of warranty. If you do not wish to accept these terms and conditions, DO NOT USE THE FILE.

The actual dynamically loadable plugin, and the library files for static linking, which are also provided in some distributions, are not covered by the licence described above. You should have received a separate licence with terms and conditions for these library files; if you received the library files without a licence, please contact nCipher.

Copyright (c) 2005-2006 Cryptocom LTD

Written by Corinne Dive-Reclus(cdive@baltimore.com)

Redistribution and use in source and binary forms, with or without modification, are permitted provided that the following conditions are met:

1. Redistributions of source code must retain the above copyright notice, this list of conditions and the following disclaimer.

2. Redistributions in binary form must reproduce the above copyright notice, this list of conditions and the following disclaimer in the documentation and/or other materials provided with the distribution.

3. All advertising materials mentioning features or use of this software must display the following acknowledgment: "This product includes software developed by the OpenSSL Project for use in the OpenSSL Toolkit. (http://www.OpenSSL.org/)"

4. The names "OpenSSL Toolkit" and "OpenSSL Project" must not be used to endorse or promote products derived from this software without prior written permission. For written permission, please contact licensing@OpenSSL.org.

5. Products derived from this software may not be called "OpenSSL" nor may "OpenSSL" appear in their names without prior written permission of the OpenSSL Project.

6. Redistributions of any form whatsoever must retain the following acknowledgment: "This product includes software developed by the OpenSSL Project for use in the OpenSSL Toolkit (http://www.OpenSSL.org/)"

Written by Corinne Dive-Reclus(cdive@baltimore.com)

Copyright@2001 Baltimore Technologies Ltd. All right Reserved.

THIS FILE IS PROVIDED BY BALTIMORE TECHNOLOGIES "AS IS" AND ANY EXPRESS OR IMPLIED WARRANTIES, INCLUDING, BUT NOT LIMITED TO, THE IMPLIED WARRANTIES OF MERCHANTABILITY AND FITNESS FOR A PARTICULAR PURPOSE ARE DISCLAIMED. IN NO EVENT SHALL BALTIMORE TECHNOLOGIES BE LIABLE FOR ANY DIRECT, INDIRECT, INCIDENTAL, SPECIAL, EXEMPLARY, OR CONSEQUENTIAL DAMAGES (INCLUDING, BUT NOT LIMITED TO, PROCUREMENT OF SUBSTITUTE GOODS OR SERVICES; LOSS OF USE, DATA, OR PROFITS; OR BUSINESS INTERRUPTION) HOWEVER CAUSED AND ON ANY THEORY OF LIABILITY, WHETHER IN CONTRACT, STRICT LIABILITY, OR TORT (INCLUDING NEGLIGENCE OR OTHERWISE) ARISING IN ANY WAY OUT OF THE USE OF THIS SOFTWARE, EVEN IF ADVISED OF THE POSSIBILITY OF SUCH DAMAGE.

Copyright (c) The Regents of the University of California. All rights reserved.

Redistribution and use in source and binary forms, with or without modification, are permitted provided that the following conditions are met:

1. Redistributions of source code must retain the above copyright notice, this list of conditions and the following disclaimer.

2. Redistributions in binary form must reproduce the above copyright notice, this list of conditions and the following disclaimer in the documentation and/or other materials provided with the distribution.

3. Neither the name of the University nor the names of its contributors may be used to endorse or promote products derived from this software without specific prior written permission.

THIS SOFTWARE IS PROVIDED BY THE REGENTS AND CONTRIBUTORS "AS IS" AND ANY EXPRESS OR IMPLIED WARRANTIES, INCLUDING, BUT NOT LIMITED TO, THE IMPLIED WARRANTIES OF MERCHANTABILITY AND FITNESS FOR A PARTICULAR PURPOSE ARE DISCLAIMED. IN NO EVENT SHALL THE REGENTS OR CONTRIBUTORS BE LIABLE FOR ANY DIRECT, INDIRECT, INCIDENTAL, SPECIAL, EXEMPLARY, OR CONSEQUENTIAL DAMAGES (INCLUDING, BUT NOT LIMITED TO, PROCUREMENT OF SUBSTITUTE GOODS OR SERVICES; LOSS OF USE, DATA, OR PROFITS; OR BUSINESS INTERRUPTION) HOWEVER CAUSED AND ON ANY THEORY OF LIABILITY, WHETHER IN CONTRACT, STRICT LIABILITY, OR TORT (INCLUDING NEGLIGENCE OR OTHERWISE) ARISING IN ANY WAY OUT OF THE USE OF THIS SOFTWARE, EVEN IF ADVISED OF THE POSSIBILITY OF SUCH DAMAGE.

Copyright (C) Sun Microsystems, Inc.

Sun RPC is a product of Sun Microsystems, Inc. and is provided for unrestricted use provided that this legend is included on all tape media and as a part of the software program in whole or part. Users may copy or modify Sun RPC without charge, but are not authorized to license or distribute it to anyone else except as part of a product or program developed by the user or with the express written consent of Sun Microsystems, Inc.

SUN RPC IS PROVIDED AS IS WITH NO WARRANTIES OF ANY KIND INCLUDING THE WARRANTIES OF DESIGN, MERCHANTIBILITY AND FITNESS FOR A PARTICULAR PURPOSE, OR ARISING FROM A COURSE OF DEALING, USAGE OR TRADE PRACTICE.

Sun RPC is provided with no support and without any obligation on the part of Sun Microsystems, Inc. to assist in its use, correction, modification or enhancement.

SUN MICROSYSTEMS, INC. SHALL HAVE NO LIABILITY WITH RESPECT TO THE INFRINGEMENT OF COPYRIGHTS, TRADE SECRETS OR ANY PATENTS BY SUN RPC OR ANY PART THEREOF.

In no event will Sun Microsystems, Inc. be liable for any lost revenue or profits or other special, indirect and consequential damages, even if Sun has been advised of the possibility of such damages.

Sun Microsystems, Inc. 2550 Garcia Avenue Mountain View, California 94043

Copyright (c) 2001-2006, Gerrit Pape All rights reserved.

Redistribution and use in source and binary forms, with or without modification, are permitted provided that the following conditions are met:

1. Redistributions of source code must retain the above copyright notice, this list of conditions and the following disclaimer.

2. Redistributions in binary form must reproduce the above copyright notice, this list of conditions and the following disclaimer in the documentation and/or other materials provided with the distribution.

3. The name of the author may not be used to endorse or promote products derived from this software without specific prior written permission.

THIS SOFTWARE IS PROVIDED BY THE AUTHOR "AS IS" AND ANY EXPRESS OR IMPLIED WARRANTIES, INCLUDING, BUT NOT LIMITED TO, THE IMPLIED WARRANTIES OF MERCHANTABILITY AND FITNESS FOR A PARTICULAR PURPOSE ARE DISCLAIMED. IN NO EVENT SHALL THE AUTHOR BE LIABLE FOR ANY DIRECT, INDIRECT, INCIDENTAL, SPECIAL, EXEMPLARY, OR CONSEQUENTIAL DAMAGES (INCLUDING, BUT NOT LIMITED TO, PROCUREMENT OF SUBSTITUTE GOODS OR SERVICES; LOSS OF USE, DATA, OR PROFITS; OR BUSINESS INTERRUPTION) HOWEVER CAUSED AND ON ANY THEORY OF LIABILITY, WHETHER IN CONTRACT, STRICT LIABILITY, OR TORT (INCLUDING NEGLIGENCE OR OTHERWISE) ARISING IN ANY WAY OUT OF THE USE OF THIS SOFTWARE, EVEN IF ADVISED OF THE POSSIBILITY OF SUCH DAMAGE.

Copyright 1989 - 1991, Julianne Frances Haugh <jockgrrl@austin.rr.com> All rights reserved.

Redistribution and use in source and binary forms, with or without modification, are permitted provided that the following conditions are met:

1. Redistributions of source code must retain the above copyright notice, this list of conditions and the following disclaimer.

2. Redistributions in binary form must reproduce the above copyright notice, this list of conditions and the following disclaimer in the documentation and/or other materials provided with the distribution.

3. Neither the name of Julianne F. Haugh nor the names of its contributors may be used to endorse or promote products derived from this software without specific prior written permission.

THIS SOFTWARE IS PROVIDED BY JULIE HAUGH AND CONTRIBUTORS "AS IS" AND ANY EXPRESS OR IMPLIED WARRANTIES, INCLUDING, BUT NOT LIMITED TO, THE IMPLIED WARRANTIES OF MERCHANTABILITY AND FITNESS FOR A PARTICULAR PURPOSE ARE DISCLAIMED. IN NO EVENT SHALL JULIE HAUGH OR CONTRIBUTORS BE LIABLE FOR ANY DIRECT, INDIRECT, INCIDENTAL, SPECIAL, EXEMPLARY, OR CONSEQUENTIAL DAMAGES (INCLUDING, BUT NOT LIMITED TO, PROCUREMENT OF SUBSTITUTE GOODS OR SERVICES; LOSS OF USE, DATA, OR PROFITS; OR BUSINESS INTERRUPTION) HOWEVER CAUSED AND ON ANY THEORY OF LIABILITY, WHETHER IN CONTRACT, STRICT LIABILITY, OR TORT (INCLUDING NEGLIGENCE OR OTHERWISE) ARISING IN ANY WAY OUT OF THE USE OF THIS SOFTWARE, EVEN IF ADVISED OF THE POSSIBILITY OF SUCH DAMAGE.

The Clarified Artistic License

Preamble

The intent of this document is to state the conditions under which a Package may be copied, such that the Copyright Holder maintains some semblance of artistic control over the development of the package, while giving the users of the package the right to use and distribute the Package in a more-or-less customary fashion, plus the right to make reasonable modifications.

Definitions:

"Package" refers to the collection of files distributed by the Copyright Holder, and derivatives of that collection of files created through textual modification.

"Standard Version" refers to such a Package if it has not been modified, or has been modified in accordance with the wishes of the Copyright Holder as specified below.

"Copyright Holder" is whoever is named in the copyright or copyrights for the package.

"You" is you, if you're thinking about copying or distributing this Package.

"Distribution fee" is a fee you charge for providing a copy of this Package to another party.

"Freely Available" means that no fee is charged for the right to use the item, though there may be fees involved in handling the item. It also means that recipients of the item may redistribute it under the same conditions they received it.

1. You may make and give away verbatim copies of the source form of the Standard Version of this Package without restriction, provided that you duplicate all of the original copyright notices and associated disclaimers.

2. You may apply bug fixes, portability fixes and other modifications derived from the Public Domain, or those made Freely Available, or from the Copyright Holder. A Package modified in such a way shall still be considered the Standard Version.

3. You may otherwise modify your copy of this Package in any way, provided that you insert a prominent notice in each changed file stating how and when you changed that file, and provided that you do at least ONE of the following:

a) place your modifications in the Public Domain or otherwise make them Freely Available, such as by posting said modifications to Usenet or an equivalent medium, or placing the modifications on a major network archive site allowing unrestricted access to them, or by allowing the Copyright Holder to include your modifications in the Standard Version of the Package.

b) use the modified Package only within your corporation or organization.

c) rename any non-standard executables so the names do not conflict with standard executables, which must also be provided, and provide a separate manual page for each non-standard executable that clearly documents how it differs from the Standard Version.

d) make other distribution arrangements with the Copyright Holder.

e) permit and encourage anyone who receives a copy of the modified Package permission to make your modifications Freely Available in some specific way.

4. You may distribute the programs of this Package in object code or executable form, provided that you do at least ONE of the following:

a) distribute a Standard Version of the executables and library files, together with instructions (in the manual page or equivalent) on where to get the Standard Version.

b) accompany the distribution with the machine-readable source of the Package with your modifications.

c) give non-standard executables non-standard names, and clearly document the differences in manual pages (or equivalent), together with instructions on where to get the Standard Version.

d) make other distribution arrangements with the Copyright Holder.

e) offer the machine-readable source of the Package, with your modifications, by mail order.

5. You may charge a distribution fee for any distribution of this Package. If you offer support for this Package, you may charge any fee you choose for that support. You may not charge a license fee for the right to use this Package itself. You may distribute this Package in aggregate with other (possibly commercial and possibly nonfree) programs as part of a larger (possibly commercial and possibly nonfree) software distribution, and charge license fees for other parts of that software distribution, provided that you do not advertise this Package as a product of your own. If the Package includes an interpreter, You may embed this Package's interpreter within an executable of yours (by linking); this shall be construed as a mere form of aggregation, provided that the complete Standard Version of the interpreter is so embedded.

6. The scripts and library files supplied as input to or produced as output from the programs of this Package do not automatically fall under the copyright of this Package, but belong to whoever generated them, and may be sold commercially, and may be aggregated with this Package. If such scripts or library files are aggregated with this Package via the so-called "undump" or "unexec" methods of producing a binary executable image, then distribution of such an image shall neither be construed as a distribution of this Package nor shall it fall under the restrictions of Paragraphs 3 and 4, provided that you do not represent such an executable image as a Standard Version of this Package.

7. C subroutines (or comparably compiled subroutines in other languages) supplied by you and linked into this Package in order to emulate subroutines and variables of the language defined by this Package shall not be considered part of this Package, but are the equivalent of input as in Paragraph 6, provided these subroutines do not change the language in any way that would cause it to fail the regression tests for the language.

8. Aggregation of the Standard Version of the Package with a commercial distribution is always permitted provided that the use of this Package is embedded; that is, when no overt attempt is made to make this Package's interfaces visible to the end user of the commercial distribution. Such use shall not be construed as a distribution of this Package.

9. The name of the Copyright Holder may not be used to endorse or promote products derived from this software without specific prior written permission.

10. THIS PACKAGE IS PROVIDED "AS IS" AND WITHOUT ANY EXPRESS OR IMPLIED WARRANTIES, INCLUDING, WITHOUT LIMITATION, THE IMPLIED WARRANTIES OF MERCHANTABILITY AND FITNESS FOR A PARTICULAR PURPOSE.

The End

Copyright (C) 1991, 1992, 1993 by Chris Thewalt (thewalt@ce.berkeley.edu)

Permission to use, copy, modify, and distribute this software for any purpose and without fee is hereby granted, provided that the above copyright notices appear in all copies and that both the copyright notice and this permission notice appear in supporting documentation. This software is provided "as is" without express or implied warranty.

Copyright (C) The Internet Society (2001). All Rights Reserved.

This document and translations of it may be copied and furnished to others, and derivative works that comment on or otherwise explain it or assist in its implementation may be prepared, copied, published and distributed, in whole or in part, without restriction of any kind, provided that the above copyright notice and this paragraph are included on all such copies and derivative works. However, this document itself may not be modified in any way, such as by removing the copyright notice or references to the Internet Society or other Internet organizations, except as needed for the purpose of developing Internet standards in which case the procedures for copyrights defined in the Internet Standards process must be followed, or as required to translate it into languages other than English.

The limited permissions granted above are perpetual and will not be revoked by the Internet Society or its successors or assigns.

This document and the information contained herein is provided on an "AS IS" basis and THE INTERNET SOCIETY AND THE INTERNET ENGINEERING TASK FORCE DISCLAIMS ALL WARRANTIES, EXPRESS OR IMPLIED, INCLUDING BUT NOT LIMITED TO ANY WARRANTY THAT THE USE OF THE INFORMATION HEREIN WILL NOT INFRINGE ANY RIGHTS OR ANY IMPLIED WARRANTIES OF MERCHANTABILITY OR FITNESS FOR A PARTICULAR PURPOSE.

This is version 2007-Mar-4 of the Info-ZIP license. The definitive version of this document should be available at ftp://ftp.info-zip.org/pub/infozip/license.html indefinitely and a copy at http://www.info-zip.org/pub/infozip/license.html.

Copyright © 1990-2007 Info-ZIP. All rights reserved.

For the purposes of this copyright and license, “Info-ZIP” is defined as the following set of individuals:

Mark Adler, John Bush, Karl Davis, Harald Denker, Jean-Michel Dubois, Jean-loup Gailly, Hunter Goatley, Ed Gordon, Ian Gorman, Chris Herborth, Dirk Haase, Greg Hartwig, Robert Heath, Jonathan Hudson, Paul Kienitz, David Kirschbaum, Johnny Lee, Onno van der Linden, Igor Mandrichenko, Steve P. Miller, Sergio Monesi, Keith Owens, George Petrov, Greg Roelofs, Kai Uwe Rommel, Steve Salisbury, Dave Smith, Steven M. Schweda, Christian Spieler, Cosmin Truta, Antoine Verheijen, Paul von Behren, Rich Wales, Mike White.

This software is provided "as is," without warranty of any kind, express or implied. In no event shall Info-ZIP or its contributors be held liable for any direct, indirect, incidental, special or consequential damages arising out of the use of or inability to use this software.

Permission is granted to anyone to use this software for any purpose, including commercial applications, and to alter it and redistribute it freely, subject to the above disclaimer and the following restrictions:

1. Redistributions of source code (in whole or in part) must retain the above copyright notice, definition, disclaimer, and this list of conditions.

2. Redistributions in binary form (compiled executables and libraries) must reproduce the above copyright notice, definition, disclaimer, and this list of conditions in documentation and/or other materials provided with the distribution. The sole exception to this condition is redistribution of a standard UnZipSFX binary (including SFXWiz) as part of a self-extracting archive; that is permitted without inclusion of this license, as long as the normal SFX banner has not been removed from the binary or disabled.

3. Altered versions--including, but not limited to, ports to new operating systems, existing ports with new graphical interfaces, versions with modified or added functionality, and dynamic, shared, or static library versions not from Info-ZIP--must be plainly marked as such and must not be misrepresented as being the original source or, if binaries, compiled from the original source. Such altered versions also must not be misrepresented as being Info-ZIP releases--including, but not limited to, labeling of the altered versions with the names "Info-ZIP" (or any variation thereof, including, but not limited to, different capitalizations), "Pocket UnZip," "WiZ" or "MacZip" without the explicit permission of Info-ZIP. Such altered versions are further prohibited from misrepresentative use of the Zip-Bugs or Info-ZIP e-mail addresses or the Info-ZIP URL(s), such as to imply Info-ZIP will provide support for the altered versions.

4. Info-ZIP retains the right to use the names "Info-ZIP," "Zip," "UnZip," "UnZipSFX," "WiZ," "Pocket UnZip," "Pocket Zip," and "MacZip" for its own source and binary releases.

Copyright (C) The Internet Society 1999. All Rights Reserved.

This document and translations of it may be copied and furnished to others, and derivative works that comment on or otherwise explain it or assist in its implementation may be prepared, copied, published and distributed, in whole or in part, without restriction of any kind, provided that the above copyright notice and this paragraph are included on all such copies and derivative works. However, this document itself may not be modified in any way, such as by removing the copyright notice or references to the Internet Society or other Internet organisations, except as needed for the purpose of developing Internet standards in which case the procedures for copyrights defined in the Internet Standards process shall be followed, or as required to translate it into languages other than English.

The limited permissions granted above are perpetual and will not be revoked by the Internet Society or its successors or assigns. This document and the information contained herein is provided on an "AS IS" basis and THE INTERNET SOCIETY AND THE INTERNET ENGINEERING TASK FORCE DISCLAIMS ALL WARRANTIES, EXPRESS OR IMPLIED, INCLUDING BUT NOT LIMITED TO ANY WARRANTY THAT THE USE OF THE INFORMATION HEREIN WILL NOT INFRINGE ANY RIGHTS OR ANY IMPLIED WARRANTIES OF MERCHANTABILITY OR FITNESS FOR A PARTICULAR PURPOSE.

Copyright (c) 2005 JSON.org

Permission is hereby granted, free of charge, to any person obtaining a copy of this software and associated documentation files (the "Software"), to deal in the Software without restriction, including without limitation the rights to use, copy, modify, merge, publish, distribute, sublicense, and/or sell copies of the Software, and to permit persons to whom the Software is furnished to do so, subject to the following conditions:

The above copyright notice and this permission notice shall be included in all copies or substantial portions of the Software.

The Software shall be used for Good, not Evil.

THE SOFTWARE IS PROVIDED "AS IS", WITHOUT WARRANTY OF ANY KIND, EXPRESS OR IMPLIED, INCLUDING BUT NOT LIMITED TO THE WARRANTIES OF MERCHANTABILITY, FITNESS FOR A PARTICULAR PURPOSE AND NONINFRINGEMENT. IN NO EVENT SHALL THE AUTHORS OR COPYRIGHT HOLDERS BE LIABLE FOR ANY CLAIM, DAMAGES OR OTHER LIABILITY, WHETHER IN AN ACTION OF CONTRACT, TORT OR OTHERWISE, ARISING FROM, OUT OF OR IN CONNECTION WITH THE SOFTWARE OR THE USE OR OTHER DEALINGS IN THE SOFTWARE.

Copyright (C) 1991-2, RSA Data Security, Inc. Created 1991. All rights reserved.

License to copy and use this software is granted provided that it is identified as the "RSA Data Security, Inc. MD5 Message-Digest Algorithm" in all material mentioning or referencing this software or this function.

License is also granted to make and use derivative works provided that such works are identified as "derived from the RSA Data Security, Inc. MD5 Message-Digest Algorithm" in all material mentioning or referencing the derived work.

RSA Data Security, Inc. makes no representations concerning either the merchantability of this software or the suitability of this software for any particular purpose. It is provided "as is" without express or implied warranty of any kind.

These notices must be retained in any copies of any part of this documentation and/or software.

Copyright (c) 1998-2008, Brian Gladman, Worcester, UK. All rights reserved.

LICENSE TERMS

The redistribution and use of this software (with or without changes) is allowed without the payment of fees or royalties provided that:

1. source code distributions include the above copyright notice, this list of conditions and the following disclaimer;

2. binary distributions include the above copyright notice, this list of conditions and the following disclaimer in their documentation;

3. the name of the copyright holder is not used to endorse products built using this software without specific written permission.

DISCLAIMER

This software is provided 'as is' with no explicit or implied warranties in respect of its properties, including, but not limited to, correctness and/or fitness for purpose.

The OpenLDAP Public License Version 2.8, 17 August 2003

Redistribution and use of this software and associated documentation ("Software"), with or without modification, are permitted provided that the following conditions are met:

1. Redistributions in source form must retain copyright statements and notices,

2. Redistributions in binary form must reproduce applicable copyright statements and notices, this list of conditions, and the following disclaimer in the documentation and/or other materials provided with the distribution, and

3. Redistributions must contain a verbatim copy of this document.

The OpenLDAP Foundation may revise this license from time to time. Each revision is distinguished by a version number. You may use this Software under terms of this license revision or under the terms of any subsequent revision of the license.

THIS SOFTWARE IS PROVIDED BY THE OPENLDAP FOUNDATION AND ITS CONTRIBUTORS "AS IS" AND ANY EXPRESSED OR IMPLIED WARRANTIES, INCLUDING, BUT NOT LIMITED TO, THE IMPLIED WARRANTIES OF MERCHANTABILITY AND FITNESS FOR A PARTICULAR PURPOSE ARE DISCLAIMED. IN NO EVENT SHALL THE OPENLDAP FOUNDATION, ITS CONTRIBUTORS, OR THE AUTHOR(S) OR OWNER(S) OF THE SOFTWARE BE LIABLE FOR ANY DIRECT, INDIRECT, INCIDENTAL, SPECIAL, EXEMPLARY, OR CONSEQUENTIAL DAMAGES (INCLUDING, BUT NOT LIMITED TO, PROCUREMENT OF SUBSTITUTE GOODS OR SERVICES; LOSS OF USE, DATA, OR PROFITS; OR BUSINESS INTERRUPTION) HOWEVER CAUSED AND ON ANY THEORY OF LIABILITY, WHETHER IN CONTRACT, STRICT LIABILITY, OR TORT (INCLUDING NEGLIGENCE OR OTHERWISE) ARISING IN ANY WAY OUT OF THE USE OF THIS SOFTWARE, EVEN IF ADVISED OF THE POSSIBILITY OF SUCH DAMAGE.

The names of the authors and copyright holders must not be used in advertising or otherwise to promote the sale, use or other dealing in this Software without specific, written prior permission. Title to copyright in this Software shall at all times remain with copyright holders.

OpenLDAP is a registered trademark of the OpenLDAP Foundation.

Copyright 1999-2012 The OpenLDAP Foundation, Redwood City, California, USA. All Rights Reserved. Permission to copy and distribute verbatim copies of this document is granted.

Copyright (C) 2000 Pierangelo Masarati, <ando@sys-net.it> All rights reserved.

Permission is granted to anyone to use this software for any purpose on any computer system, and to alter it and redistribute it, subject to the following restrictions:

1. The author is not responsible for the consequences of use of this software, no matter how awful, even if they arise from flaws in it.

2. The origin of this software must not be misrepresented, either by explicit claim or by omission. Since few users ever read sources, credits should appear in the documentation.

3. Altered versions must be plainly marked as such, and must not be misrepresented as being the original software. Since few users ever read sources, credits should appear in the documentation.

4. This notice may not be removed or altered.

Copyright 2004, 2005,2011 Howard Chu, Symas Corp. All rights reserved.

Copyright (c) 2009, 2010 Martin Hedenfalk <martin@bzero.se>

Permission to use, copy, modify, and distribute this software for any purpose with or without fee is hereby granted, provided that the above copyright notice and this permission notice appear in all copies.

THE SOFTWARE IS PROVIDED "AS IS" AND THE AUTHOR DISCLAIMS ALL WARRANTIES WITH REGARD TO THIS SOFTWARE INCLUDING ALL IMPLIED WARRANTIES OF MERCHANTABILITY AND FITNESS. IN NO EVENT SHALL THE AUTHOR BE LIABLE FOR ANY SPECIAL, DIRECT, INDIRECT, OR CONSEQUENTIAL DAMAGES OR ANY DAMAGES WHATSOEVER RESULTING FROM LOSS OF USE, DATA OR PROFITS, WHETHER IN AN ACTION OF CONTRACT, NEGLIGENCE OR OTHER TORTIOUS ACTION, ARISING OUT OF OR IN CONNECTION WITH THE USE OR PERFORMANCE OF THIS SOFTWARE.

Portions Copyright (c) 1990-1996 Regents of the University of Michigan. All rights reserved.

Redistribution and use in source and binary forms are permitted provided that this notice is preserved and that due credit is given to the University of Michigan at Ann Arbor. The name of the University may not be used to endorse or promote products derived from this software without specific prior written permission. This software is provided "as is" without express or implied warranty.

Copyright (c) 2009 by Matthew Backes, Symas Corp. All rights reserved.

Portions Copyright 1995, 2001-2003 IBM Corporation. All rights reserved.

Portions Copyright (c) 1996, 1998 by Internet Software Consortium.

Permission to use, copy, modify, and distribute this software for any purpose with or without fee is hereby granted, provided that the above copyright notice and this permission notice appear in all copies.

THE SOFTWARE IS PROVIDED "AS IS" AND INTERNET SOFTWARE CONSORTIUM DISCLAIMS ALL WARRANTIES WITH REGARD TO THIS SOFTWARE INCLUDING ALL IMPLIED WARRANTIES OF MERCHANTABILITY AND FITNESS. IN NO EVENT SHALL INTERNET SOFTWARE CONSORTIUM BE LIABLE FOR ANY SPECIAL, DIRECT, INDIRECT, OR CONSEQUENTIAL

DAMAGES OR ANY DAMAGES WHATSOEVER RESULTING FROM LOSS OF USE, DATA OR PROFITS, WHETHER IN AN ACTION OF CONTRACT, NEGLIGENCE OR OTHER TORTIOUS ACTION, ARISING OUT OF OR IN CONNECTION WITH THE USE OR PERFORMANCE OF THIS SOFTWARE.

Copyright 1997, 1998, 1999, 2001 Computing Research Labs, New Mexico State University

Permission is hereby granted, free of charge, to any person obtaining a copy of this software and associated documentation files (the "Software"), to deal in the Software without restriction, including without limitation the rights to use, copy, modify, merge, publish, distribute, sublicense, and/or sell copies of the Software, and to permit persons to whom the Software is furnished to do so, subject to the following conditions:

The above copyright notice and this permission notice shall be included in all copies or substantial portions of the Software.

THE SOFTWARE IS PROVIDED "AS IS", WITHOUT WARRANTY OF ANY KIND, EXPRESS OR IMPLIED, INCLUDING BUT NOT LIMITED TO THE WARRANTIES OF MERCHANTABILITY, FITNESS FOR A PARTICULAR PURPOSE AND NONINFRINGEMENT. IN NO EVENT SHALL THE COMPUTING RESEARCH LAB OR NEW MEXICO STATE UNIVERSITY BE LIABLE FOR ANY CLAIM, DAMAGES OR OTHER LIABILITY, WHETHER IN AN ACTION OF CONTRACT, TORT OR OTHERWISE, ARISING FROM, OUT OF OR IN CONNECTION WITH THE SOFTWARE OR THE USE OR OTHER DEALINGS IN THE SOFTWARE.

UCD Terms of Use (http://www.unicode.org/Public/UNIDATA/UCD.html)

Disclaimer

The Unicode Character Database is provided as is by Unicode, Inc. No claims are made as to fitness for any particular purpose. No warranties of any kind are expressed or implied. The recipient agrees to determine applicability of information provided. If this file has been purchased on magnetic or optical media from Unicode, Inc., the sole remedy for any claim will be exchange of defective media within 90 days of receipt.

This disclaimer is applicable for all other data files accompanying the Unicode Character Database, some of which have been compiled by the Unicode Consortium, and some of which have been supplied by other sources.

Limitations on Rights to Redistribute This Data

Recipient is granted the right to make copies in any form for internal distribution and to freely use the information supplied in the creation of products supporting the Unicode (TM) Standard. The files in the Unicode Character Database can be redistributed to third parties or other organizations (whether for profit or not) as long as this notice and the disclaimer notice are retained. Information can be extracted from these files and used in documentation or programs, as long as there is an accompanying notice indicating the source.

Portions Copyright (C) 1999, 2000 Novell, Inc. All Rights Reserved.

THIS WORK IS SUBJECT TO U.S. AND INTERNATIONAL COPYRIGHT LAWS AND TREATIES. USE, MODIFICATION, AND REDISTRIBUTION OF THIS WORK IS SUBJECT TO VERSION 2.0.1 OF THE OPENLDAP PUBLIC LICENSE, A COPY OF WHICH IS AVAILABLE AT HTTP://WWW.OPENLDAP.ORG/LICENSE.HTML OR IN THE FILE "LICENSE" IN THE TOP-LEVEL DIRECTORY OF THE DISTRIBUTION. ANY USE OR EXPLOITATION OF THIS WORK OTHER THAN AS AUTHORIZED IN VERSION 2.0.1 OF THE OPENLDAP PUBLIC LICENSE, OR OTHER PRIOR WRITTEN CONSENT FROM NOVELL, COULD SUBJECT THE PERPETRATOR TO CRIMINAL AND CIVIL LIABILITY.

Copyright 1999, Juan C. Gomez, All rights reserved. This software is not subject to any license of Silicon Graphics Inc. or Purdue University.

Redistribution and use in source and binary forms are permitted without restriction or fee of any kind as long as this notice is preserved.

Portions Copyright (c) 1987 Regents of the University of California. All rights reserved.

Redistribution and use in source and binary forms are permitted provided that the above copyright notice and this paragraph are duplicated in all such forms and that any documentation, advertising materials, and other materials related to such distribution and use acknowledge that the software was developed by the University of California, Berkeley. The name of the University may not be used to endorse or promote products derived from this software without specific prior written permission. THIS SOFTWARE IS PROVIDED "AS IS" AND WITHOUT ANY EXPRESS OR IMPLIED WARRANTIES, INCLUDING, WITHOUT LIMITATION, THE IMPLIED WARRANTIES OF MERCHANTIBILITY AND FITNESS FOR A PARTICULAR PURPOSE.

Copyright (c) 1991, 1993 The Regents of the University of California. All rights reserved.

Redistribution and use in source and binary forms, with or without modification, are permitted provided that the following conditions are met:

1. Redistributions of source code must retain the above copyright notice, this list of conditions and the following disclaimer.

2. Redistributions in binary form must reproduce the above copyright notice, this list of conditions and the following disclaimer in the documentation and/or other materials provided with the distribution.

4. Neither the name of the University nor the names of its contributors may be used to endorse or promote products derived from this software without specific prior written permission.

THIS SOFTWARE IS PROVIDED BY THE REGENTS AND CONTRIBUTORS "AS IS" AND ANY EXPRESS OR IMPLIED WARRANTIES, INCLUDING, BUT NOT LIMITED TO, THE IMPLIED WARRANTIES OF MERCHANTABILITY AND FITNESS FOR A PARTICULAR PURPOSE ARE DISCLAIMED. IN NO EVENT SHALL THE REGENTS OR CONTRIBUTORS BE LIABLE FOR ANY DIRECT, INDIRECT, INCIDENTAL, SPECIAL, EXEMPLARY, OR CONSEQUENTIAL DAMAGES

(INCLUDING, BUT NOT LIMITED TO, PROCUREMENT OF SUBSTITUTE GOODS OR SERVICES; LOSS OF USE, DATA, OR PROFITS; OR BUSINESS INTERRUPTION) HOWEVER CAUSED AND ON ANY THEORY OF LIABILITY, WHETHER IN CONTRACT, STRICT LIABILITY, OR TORT (INCLUDING NEGLIGENCE OR OTHERWISE) ARISING IN ANY WAY OUT OF THE USE OF THIS SOFTWARE, EVEN IF ADVISED OF THE POSSIBILITY OF SUCH DAMAGE.

Portions Copyright 2008 Pierangelo Masarati. All rights reserved.

Copyright (c) 2000-2001, Aaron D. Gifford All rights reserved.

Redistribution and use in source and binary forms, with or without modification, are permitted provided that the following conditions are met:

1. Redistributions of source code must retain the above copyright notice, this list of conditions and the following disclaimer.

2. Redistributions in binary form must reproduce the above copyright notice, this list of conditions and the following disclaimer in the documentation and/or other materials provided with the distribution.

3. Neither the name of the copyright holder nor the names of contributors may be used to endorse or promote products derived from this software without specific prior written permission.

THIS SOFTWARE IS PROVIDED BY THE AUTHOR AND CONTRIBUTOR(S) "AS IS" AND ANY EXPRESS OR IMPLIED WARRANTIES, INCLUDING, BUT NOT LIMITED TO, THE IMPLIED WARRANTIES OF MERCHANTABILITY AND FITNESS FOR A PARTICULAR PURPOSE ARE DISCLAIMED. IN NO EVENT SHALL THE AUTHOR OR CONTRIBUTOR(S) BE LIABLE FOR ANY DIRECT, INDIRECT, INCIDENTAL, SPECIAL, EXEMPLARY, OR CONSEQUENTIAL DAMAGES (INCLUDING, BUT NOT LIMITED TO, PROCUREMENT OF SUBSTITUTE GOODS OR SERVICES; LOSS OF USE, DATA, OR PROFITS; OR BUSINESS INTERRUPTION) HOWEVER CAUSED AND ON ANY THEORY OF LIABILITY, WHETHER IN CONTRACT, STRICT LIABILITY, OR TORT (INCLUDING NEGLIGENCE OR OTHERWISE) ARISING IN ANY WAY OUT OF THE USE OF THIS SOFTWARE, EVEN IF ADVISED OF THE POSSIBILITY OF SUCH DAMAGE.

Copyright 2011 Devin J. Pohly

Portions Copyright 2008, 2009, 2011 Howard Chu

Copyright 2008 Emmanuel Dreyfus. All rights reserved.

Copyright 2009 Jonathan Clarke <jonathan@phillipoux.net>. All rights reserved.

Portions Copyright 2004 by IBM Corporation. All rights reserved.

Copyright 2004 Sang Seok Lim, IBM Corp. All Rights Reserved.

Portions Copyright 2007 Micha? Szulczy?ski. All rights reserved.

Copyright 1991-1996 Karl Lehenbauer and Mark Diekhans.

Permission to use, copy, modify, and distribute this software and its documentation for any purpose and without fee is hereby granted, provided that the above copyright notice appear in all copies. Karl Lehenbauer and Mark Diekhans make no representations about the suitability of this software for any purpose. It is provided "as is" without express or implied warranty.

Copyright (c) 1993 The Regents of the University of California.

Copyright (c) 1994-1995 Sun Microsystems, Inc.

Copyright (c) 1998-1999 NeoSoft, Inc. All Rights Reserved.

This software may be used, modified, copied, distributed, and sold, in both source and binary form provided that these copyrights are retained and their terms are followed.

Under no circumstances are the authors or NeoSoft Inc. responsible for the proper functioning of this software, nor do the authors assume any liability for damages incurred with its use.

Redistribution and use in source and binary forms are permitted provided that this notice is preserved and that due credit is given to NeoSoft, Inc.

NeoSoft, Inc. may not be used to endorse or promote products derived from this software without specific prior written permission. This software is provided "as is" without express or implied warranty.

Requests for permission may be sent to NeoSoft Inc, 1770 St. James Place, Suite 500, Houston, TX, 77056.

Portions Copyright 1998-2003 Kurt D. Zeilenga.

Portions Copyright 1998-2001 Net Boolean Incorporated. All rights reserved.

Portions Copyright 2008 Pierangelo Masarati, SysNet All rights reserved.

Copyright (C) 1995, 1996, 1997, 1998, and 1999 WIDE Project. All rights reserved.

Redistribution and use in source and binary forms, with or without modification, are permitted provided that the following conditions are met:

1. Redistributions of source code must retain the above copyright notice, this list of conditions and the following disclaimer.

2. Redistributions in binary form must reproduce the above copyright notice, this list of conditions and the following disclaimer in the documentation and/or other materials provided with the distribution.

3. Neither the name of the project nor the names of its contributors may be used to endorse or promote products derived from this software without specific prior written permission.

THIS SOFTWARE IS PROVIDED BY THE PROJECT AND CONTRIBUTORS "AS IS" AND ANY EXPRESS OR IMPLIED WARRANTIES, INCLUDING, BUT NOT LIMITED TO, THE IMPLIED WARRANTIES OF MERCHANTABILITY AND FITNESS FOR A PARTICULAR PURPOSE ARE DISCLAIMED. IN NO EVENT SHALL THE PROJECT OR CONTRIBUTORS BE LIABLE FOR ANY

DIRECT, INDIRECT, INCIDENTAL, SPECIAL, EXEMPLARY, OR CONSEQUENTIAL DAMAGES (INCLUDING, BUT NOT LIMITED TO, PROCUREMENT OF SUBSTITUTE GOODS OR SERVICES; LOSS OF USE, DATA, OR PROFITS; OR BUSINESS INTERRUPTION) HOWEVER CAUSED AND ON ANY THEORY OF LIABILITY, WHETHER IN CONTRACT, STRICT LIABILITY, OR TORT (INCLUDING NEGLIGENCE OR OTHERWISE) ARISING IN ANY WAY OUT OF THE USE OF THIS SOFTWARE, EVEN IF ADVISED OF THE POSSIBILITY OF SUCH DAMAGE.

Copyright (C) 2004-2006 Emmanuel Dreyfus All rights reserved.

Redistribution and use in source and binary forms, with or without modification, are permitted provided that the following conditions are met:

1. Redistributions of source code must retain the above copyright notice, this list of conditions and the following disclaimer.

2. Redistributions in binary form must reproduce the above copyright notice, this list of conditions and the following disclaimer in the documentation and/or other materials provided with the distribution.

3. Neither the name of the project nor the names of its contributors may be used to endorse or promote products derived from this software without specific prior written permission.

THIS SOFTWARE IS PROVIDED BY THE PROJECT AND CONTRIBUTORS "AS IS" AND ANY EXPRESS OR IMPLIED WARRANTIES, INCLUDING, BUT NOT LIMITED TO, THE IMPLIED WARRANTIES OF MERCHANTABILITY AND FITNESS FOR A PARTICULAR PURPOSE ARE DISCLAIMED. IN NO EVENT SHALL THE PROJECT OR CONTRIBUTORS BE LIABLE FOR ANY DIRECT, INDIRECT, INCIDENTAL, SPECIAL, EXEMPLARY, OR CONSEQUENTIAL DAMAGES (INCLUDING, BUT NOT LIMITED TO, PROCUREMENT OF SUBSTITUTE GOODS OR SERVICES; LOSS OF USE, DATA, OR PROFITS; OR BUSINESS INTERRUPTION) HOWEVER CAUSED AND ON ANY THEORY OF LIABILITY, WHETHER IN CONTRACT, STRICT LIABILITY, OR TORT (INCLUDING NEGLIGENCE OR OTHERWISE) ARISING IN ANY WAY OUT OF THE USE OF THIS SOFTWARE, EVEN IF ADVISED OF THE POSSIBILITY OF SUCH DAMAGE.

Copyright (C) 1995, 1996, 1997, and 1998 WIDE Project.

Copyright (C) 2008 Timo Teras <timo.teras@iki.fi>. All rights reserved.

Redistribution and use in source and binary forms, with or without modification, are permitted provided that the following conditions are met:

1. Redistributions of source code must retain the above copyright notice, this list of conditions and the following disclaimer.

2. Redistributions in binary form must reproduce the above copyright notice, this list of conditions and the following disclaimer in the documentation and/or other materials provided with the distribution.

3. Neither the name of the project nor the names of its contributors may be used to endorse or promote products derived from this software without specific prior written permission.

THIS SOFTWARE IS PROVIDED BY THE PROJECT AND CONTRIBUTORS "AS IS" AND ANY EXPRESS OR IMPLIED WARRANTIES, INCLUDING, BUT NOT LIMITED TO, THE IMPLIED WARRANTIES OF MERCHANTABILITY AND FITNESS FOR A PARTICULAR PURPOSE ARE DISCLAIMED. IN NO EVENT SHALL THE PROJECT OR CONTRIBUTORS BE LIABLE FOR ANY DIRECT, INDIRECT, INCIDENTAL, SPECIAL, EXEMPLARY, OR CONSEQUENTIAL DAMAGES (INCLUDING, BUT NOT LIMITED TO, PROCUREMENT OF SUBSTITUTE GOODS OR SERVICES; LOSS OF USE, DATA, OR PROFITS; OR BUSINESS INTERRUPTION) HOWEVER CAUSED AND ON ANY THEORY OF LIABILITY, WHETHER IN CONTRACT, STRICT LIABILITY, OR TORT (INCLUDING NEGLIGENCE OR OTHERWISE) ARISING IN ANY WAY OUT OF THE USE OF THIS SOFTWARE, EVEN IF ADVISED OF THE POSSIBILITY OF SUCH DAMAGE.

Copyright 2000 Wasabi Systems, Inc. All rights reserved.

This software was written by Frank van der Linden of Wasabi Systems for Zembu Labs, Inc. http://www.zembu.com/

Redistribution and use in source and binary forms, with or without modification, are permitted provided that the following conditions are met:

1. Redistributions of source code must retain the above copyright notice, this list of conditions and the following disclaimer.

2. Redistributions in binary form must reproduce the above copyright notice, this list of conditions and the following disclaimer in the documentation and/or other materials provided with the distribution.

3. The name of Wasabi Systems, Inc. may not be used to endorse or promote products derived from this software without specific prior written permission.

THIS SOFTWARE IS PROVIDED BY WASABI SYSTEMS, INC. "AS IS" AND ANY EXPRESS OR IMPLIED WARRANTIES, INCLUDING, BUT NOT LIMITED TO, THE IMPLIED WARRANTIES OF MERCHANTABILITY AND FITNESS FOR A PARTICULAR PURPOSE ARE DISCLAIMED. IN NO EVENT SHALL WASABI SYSTEMS, INC BE LIABLE FOR ANY DIRECT, INDIRECT, INCIDENTAL, SPECIAL, EXEMPLARY, OR CONSEQUENTIAL DAMAGES (INCLUDING, BUT NOT LIMITED TO, PROCUREMENT OF SUBSTITUTE GOODS OR SERVICES; LOSS OF USE, DATA, OR PROFITS; OR BUSINESS INTERRUPTION) HOWEVER CAUSED AND ON ANY THEORY OF LIABILITY, WHETHER IN CONTRACT, STRICT LIABILITY, OR TORT (INCLUDING NEGLIGENCE OR OTHERWISE) ARISING IN ANY WAY OUT OF THE USE OF THIS SOFTWARE, EVEN IF ADVISED OF THE POSSIBILITY OF SUCH DAMAGE.

Copyright (C) 2004 SuSE Linux AG, Nuernberg, Germany.

Contributed by: Michal Ludvig <mludvig@suse.cz>, SUSE Labs All rights reserved.

Redistribution and use in source and binary forms, with or without modification, are permitted provided that the following conditions are met:

1. Redistributions of source code must retain the above copyright notice, this list of conditions and the following disclaimer.

2. Redistributions in binary form must reproduce the above copyright notice, this list of conditions and the following disclaimer in the documentation and/or other materials provided with the distribution.

3. Neither the name of the project nor the names of its contributors may be used to endorse or promote products derived from this software without specific prior written permission.

THIS SOFTWARE IS PROVIDED BY THE PROJECT AND CONTRIBUTORS "AS IS" AND ANY EXPRESS OR IMPLIED WARRANTIES, INCLUDING, BUT NOT LIMITED TO, THE IMPLIED WARRANTIES OF MERCHANTABILITY AND FITNESS FOR A PARTICULAR PURPOSE ARE DISCLAIMED. IN NO EVENT SHALL THE PROJECT OR CONTRIBUTORS BE LIABLE FOR ANY DIRECT, INDIRECT, INCIDENTAL, SPECIAL, EXEMPLARY, OR CONSEQUENTIAL DAMAGES (INCLUDING, BUT NOT LIMITED TO, PROCUREMENT OF SUBSTITUTE GOODS OR SERVICES; LOSS OF USE, DATA, OR PROFITS; OR BUSINESS INTERRUPTION) HOWEVER CAUSED AND ON ANY THEORY OF LIABILITY, WHETHER IN CONTRACT, STRICT LIABILITY, OR TORT (INCLUDING NEGLIGENCE OR OTHERWISE) ARISING IN ANY WAY OUT OF THE USE OF THIS SOFTWARE, EVEN IF ADVISED OF THE POSSIBILITY OF SUCH DAMAGE.

Copyright (C) 2004 SuSE Linux AG, Nuernberg, Germany.

Contributed by: Michal Ludvig <mludvig@suse.cz>, SUSE Labs All rights reserved.

Redistribution and use in source and binary forms, with or without modification, are permitted provided that the following conditions are met:

1. Redistributions of source code must retain the above copyright notice, this list of conditions and the following disclaimer.

2. Redistributions in binary form must reproduce the above copyright notice, this list of conditions and the following disclaimer in the documentation and/or other materials provided with the distribution.

3. Neither the name of the project nor the names of its contributors may be used to endorse or promote products derived from this software without specific prior written permission.

THIS SOFTWARE IS PROVIDED BY THE PROJECT AND CONTRIBUTORS "AS IS" AND ANY EXPRESS OR IMPLIED WARRANTIES, INCLUDING, BUT NOT LIMITED TO, THE IMPLIED WARRANTIES OF MERCHANTABILITY AND FITNESS FOR A PARTICULAR PURPOSE ARE DISCLAIMED. IN NO EVENT SHALL THE PROJECT OR CONTRIBUTORS BE LIABLE FOR ANY DIRECT, INDIRECT, INCIDENTAL, SPECIAL, EXEMPLARY, OR CONSEQUENTIAL DAMAGES (INCLUDING, BUT NOT LIMITED TO, PROCUREMENT OF SUBSTITUTE GOODS OR SERVICES; LOSS OF USE, DATA, OR PROFITS; OR BUSINESS INTERRUPTION) HOWEVER CAUSED AND ON ANY THEORY OF LIABILITY, WHETHER IN CONTRACT, STRICT LIABILITY, OR TORT (INCLUDING NEGLIGENCE OR OTHERWISE) ARISING IN ANY WAY OUT OF THE USE OF THIS SOFTWARE, EVEN IF ADVISED OF THE POSSIBILITY OF SUCH DAMAGE.

Copyright (C) 1995, 1996, 1997, and 1998 WIDE Project.

Copyright (C) 2008 Timo Teras. All rights reserved.

Redistribution and use in source and binary forms, with or without modification, are permitted provided that the following conditions are met:

1. Redistributions of source code must retain the above copyright notice, this list of conditions and the following disclaimer.

2. Redistributions in binary form must reproduce the above copyright notice, this list of conditions and the following disclaimer in the documentation and/or other materials provided with the distribution.

3. Neither the name of the project nor the names of its contributors may be used to endorse or promote products derived from this software without specific prior written permission.

THIS SOFTWARE IS PROVIDED BY THE PROJECT AND CONTRIBUTORS "AS IS" AND ANY EXPRESS OR IMPLIED WARRANTIES, INCLUDING, BUT NOT LIMITED TO, THE IMPLIED WARRANTIES OF MERCHANTABILITY AND FITNESS FOR A PARTICULAR PURPOSE ARE DISCLAIMED. IN NO EVENT SHALL THE PROJECT OR CONTRIBUTORS BE LIABLE FOR ANY DIRECT, INDIRECT, INCIDENTAL, SPECIAL, EXEMPLARY, OR CONSEQUENTIAL DAMAGES (INCLUDING, BUT NOT LIMITED TO, PROCUREMENT OF SUBSTITUTE GOODS OR SERVICES; LOSS OF USE, DATA, OR PROFITS; OR BUSINESS INTERRUPTION) HOWEVER CAUSED AND ON ANY THEORY OF LIABILITY, WHETHER IN CONTRACT, STRICT LIABILITY, OR TORT (INCLUDING NEGLIGENCE OR OTHERWISE) ARISING IN ANY WAY OUT OF THE USE OF THIS SOFTWARE, EVEN IF ADVISED OF THE POSSIBILITY OF SUCH DAMAGE.

Copyright (C) 2005 International Business Machines Corporation

Copyright (c) 2005 by Trusted Computer Solutions, Inc. All rights reserved.

Redistribution and use in source and binary forms, with or without modification, are permitted provided that the following conditions are met:

1. Redistributions of source code must retain the above copyright notice, this list of conditions and the following disclaimer.

2. Redistributions in binary form must reproduce the above copyright notice, this list of conditions and the following disclaimer in the documentation and/or other materials provided with the distribution.

3. Neither the name of the project nor the names of its contributors may be used to endorse or promote products derived from this software without specific prior written permission.

THIS SOFTWARE IS PROVIDED BY THE PROJECT AND CONTRIBUTORS "AS IS" AND ANY EXPRESS OR IMPLIED WARRANTIES, INCLUDING, BUT NOT LIMITED TO, THE IMPLIED WARRANTIES OF MERCHANTABILITY AND FITNESS FOR A PARTICULAR PURPOSE ARE DISCLAIMED. IN NO EVENT SHALL THE PROJECT OR CONTRIBUTORS BE LIABLE FOR ANY DIRECT, INDIRECT, INCIDENTAL, SPECIAL, EXEMPLARY, OR CONSEQUENTIAL DAMAGES

(INCLUDING, BUT NOT LIMITED TO, PROCUREMENT OF SUBSTITUTE GOODS OR SERVICES; LOSS OF USE, DATA, OR PROFITS; OR BUSINESS INTERRUPTION) HOWEVER CAUSED AND ON ANY THEORY OF LIABILITY, WHETHER IN CONTRACT, STRICT LIABILITY, OR TORT (INCLUDING NEGLIGENCE OR OTHERWISE) ARISING IN ANY WAY OUT OF THE USE OF THIS SOFTWARE, EVEN IF ADVISED OF THE POSSIBILITY OF SUCH DAMAGE.

**Parent topic:** Notices

## Trademarks

EPSON® and Supplies Central® are registered trademarks, EPSON Exceed Your Vision is a registered logomark, and Epson Connect™ is a trademark of Seiko Epson Corporation.

Epson Store℠ is a service mark of Epson America, Inc.

Epson iPrint™ and Remote Print™ are trademarks of Seiko Epson Corporation.

Apple, iPad, iPhone, iPod touch, Mac, and OS X are trademarks of Apple Inc., registered in the U.S. and other countries. AirPrint and the AirPrint logo are trademarks of Apple Inc.

Google is a registered trademark and Android, Chromebook, Google Chrome, Google Cloud Print, and Google Drive are trademarks of Google Inc.

Wi-Fi Direct® is a registered trademark of Wi-Fi Alliance®.

General Notice: Other product names used herein are for identification purposes only and may be trademarks of their respective owners. Epson disclaims any and all rights in those marks.

EPSON®
EXCEED YOUR VISION

**Parent topic:** Notices

## Copyright Notice

All rights reserved. No part of this publication may be reproduced, stored in a retrieval system, or transmitted in any form or by any means, electronic, mechanical, photocopying, recording, or otherwise, without the prior written permission of Seiko Epson Corporation. The information contained herein is designed only for use with this Epson product. Epson is not responsible for any use of this information as applied to other products.

Neither Seiko Epson Corporation nor its affiliates shall be liable to the purchaser of this product or third parties for damages, losses, costs, or expenses incurred by purchaser or third parties as a result of:

accident, misuse, or abuse of this product or unauthorized modifications, repairs, or alterations to this product, or (excluding the U.S.) failure to strictly comply with Seiko Epson Corporation's operating and maintenance instructions.

Seiko Epson Corporation shall not be liable for any damages or problems arising from the use of any options or any consumable products other than those designated as Original Epson Products or Epson Approved Products by Seiko Epson Corporation.

Seiko Epson Corporation shall not be held liable for any damage resulting from electromagnetic interference that occurs from the use of any interface cables other than those designated as Epson approved Products by Seiko Epson Corporation.

This information is subject to change without notice.

libTIFF Software Acknowledgment
A Note Concerning Responsible Use of Copyrighted Materials
Default Delay Times for Power Management for Epson Products
Copyright Attribution

**Parent topic:** Notices

## libTIFF Software Acknowledgment

Copyright © 1988-1997 Sam Leffler

Copyright © 1991-1997 Silicon Graphics, Inc.

Permission to use, copy, modify, distribute, and sell this software and its documentation for any purpose is hereby granted without fee, provided that (I) the above copyright notices and this permission notice appear in all copies of the software and related documentation, and (ii) the names of Sam Leffler and Silicon Graphics may not be used in any advertising or publicity relating to the software without the specific, prior written permission of Sam Leffler and Silicon Graphics.

THE SOFTWARE IS PROVIDED "AS-IS" AND WITHOUT WARRANTY OF ANY KIND, EXPRESS, IMPLIED OR OTHERWISE, INCLUDING WITHOUT LIMITATION, ANY WARRANTY OF MERCHANTABILITY OR FITNESS FOR A PARTICULAR PURPOSE.

IN NO EVENT SHALL SAM LEFFLER OR SILICON GRAPHICS BE LIABLE FOR ANY SPECIAL, INCIDENTAL, INDIRECT OR CONSEQUENTIAL DAMAGES OF ANY KIND, OR ANY DAMAGES WHATSOEVER RESULTING FROM LOSS OF USE, DATA OR PROFITS, WHETHER OR NOT ADVISED OF THE POSSIBILITY OF DAMAGE, AND ON ANY THEORY OF LIABILITY, ARISING OUT OF OR IN CONNECTION WITH THE USE OR PERFORMANCE OF THIS SOFTWARE.

**Parent topic:** Copyright Notice

## A Note Concerning Responsible Use of Copyrighted Materials

Epson encourages each user to be responsible and respectful of the copyright laws when using any Epson product. While some countries' laws permit limited copying or reuse of copyrighted material in certain circumstances, those circumstances may not be as broad as some people assume. Contact your legal advisor for any questions regarding copyright law.

**Parent topic:** Copyright Notice

## Default Delay Times for Power Management for Epson Products

This product will enter sleep mode after a period of nonuse. This is to ensure that the product meets Energy Star standards of energy efficiency. More energy savings can be achieved by setting the time to sleep to a shorter interval.

**Parent topic:** Copyright Notice

## Copyright Attribution

© 2014 Epson America, Inc.

12/14

CPD-40373

**Parent topic:** Copyright Notice