ThinkPad

Hardware Maintenance Manual

ThinkPad E550, E555, and E550c

Note: Before using this information and the product it supports, be sure to read the general information under Appendix A “Notices” on page 101.

Second Edition (January 2015)

© Copyright Lenovo 2014, 2015.

LIMITED AND RESTRICTED RIGHTS NOTICE: If data or software is delivered pursuant a General Services Administration “GSA” contract, use, reproduction, or disclosure is subject to restrictions set forth in Contract No. GS-35F-05925.

Contents

About this manual iii

Chapter 1. Safety information 1

General safety 1

Electrical safety 2

Safety inspection guide 3

Handling devices that are sensitive to electrostatic discharge 3

Grounding requirements 4

Safety notices (multilingual translations) 4

Laser compliance statement (multilingual translations) 18

Chapter 2. Important service information 25

Strategy for replacing FRUs 25

Strategy for replacing a hard disk drive or a solid-state drive 25

Important notice for replacing a system board 26

How to use error codes 26

Strategy for replacing FRUs for CTO, special-bid, and standard models 26

Product definition 26

FRU identification 26

Chapter 3. General checkout 29

What to do first 29

Checkout guide 30

Lenovo Solution Center 30

Quick test programs 30

UEFI diagnostic program 31

Bootable diagnostic programs 32

Power system checkout 33

Checking the ac power adapter 33

Checking operational charging 33

Checking the battery pack 34

Checking the coin-cell battery 34

Chapter 4. Related service information 37

Restoring the factory contents by using the Recovery Disc Set 37

Recovery overview for the Windows 8.1 operating system 38

Refreshing your computer 38

Resetting your computer to the factory default settings 38

Using the advanced startup options 39

Recovering your operating system if Windows 8.1 fails to start 39

Creating and using recovery media 39

Passwords 40

Power-on password 41

Hard disk password 41

Supervisor password 41

How to remove the power-on password 41

How to remove the hard disk password 42

Power management 42

Screen blank mode (for the Windows 7 operating system only) 42

Sleep mode 42

Hibernation mode 43

Symptom-to-FRU index 43

Numeric error codes 44

Error messages 46

Beep symptoms 46

No-beep symptoms 46

LCD-related symptoms 47

Intermittent problems 47

Undetermined problems 47

Chapter 5. Status indicators 49

Chapter 6. Special keys 51

Chapter 7. Locations 53

Locating computer controls, connectors, and indicators 53

Front view 53

Rear view 54

Bottom view 54

Locating FRUs and CRUs 54

Major FRUs and CRUs 56

LCD FRUs and CRUs 58

Miscellaneous kits and other FRUs 60

Looking up FRU information 60

Chapter 8. FRU replacement notices 61

Screw notices 61

Retaining serial numbers 62

Restoring the serial number of the system unit 62

Retaining the UUID 63

© Copyright Lenovo 2014, 2015

Chapter 9. Removing or replacing a FRU 65
General guidelines 65
1010 Lenovo-OneLink-connector cover 66
1020 Battery pack 66
1030 Large bottom cover 67
1040 Small bottom cover 68
1050 Optical drive or optical-drive bay bezel . . . 69
1060 Memory module 70
1070 Hard disk drive assembly or solid-state drive assembly 70
1080 Wireless LAN card 72
1090 Coin-cell battery 73
1110 Keyboard 73
1120 Keyboard bezel assembly 75
1130 System board and thermal fan 78
1140 dc-in/USB-connector board with cable . . . 83
1150 Audio connector card with cable 84
1160 Speaker assembly 85
1170 LCD unit 86
1180 Base cover assembly 89
2010 LCD bezel 92
2020 LCD panel 92
2030 LCD hinges 94
2040 Camera/microphone module for models with a 2D camera 95
2050 Camera and microphone modules for models with a 3D camera 96
2060 LCD cables 97
2070 Wireless LAN assembly and LCD rear cover 98

Appendix A. Notices 101
Electronic emission notices 102
Trademarks 102

Appendix B. Abbreviation and acronym table 103

About this manual

This manual contains service and reference information for the following ThinkPad® product:

ThinkPad E550	Machine type (MT) 20DF (Tx) and 20DG (Rx)
ThinkPad E555	Machine type (MT) 20DH
ThinkPad E550c	Machine type (MT) 20E0

Use this manual along with the advanced diagnostic tests to troubleshoot problems.

Important:

This manual is intended only for trained service technicians who are familiar with ThinkPad products. Use this manual along with the advanced diagnostic tests to troubleshoot problems effectively.
Before servicing a ThinkPad product, be sure to read all the information under Chapter 1 “Safety information” on page 1 and Chapter 2 “Important service information” on page 25.

© Copyright Lenovo 2014, 2015

Chapter 1. Safety information

This chapter presents the following safety information that you need to be familiar with before you service a ThinkPad notebook computer.

- “General safety” on page 1
- “Electrical safety” on page 2
- “Safety inspection guide” on page 3
- “Handling devices that are sensitive to electrostatic discharge” on page 3
- “Grounding requirements” on page 4
- “Safety notices (multilingual translations)” on page 4
- “Laser compliance statement (multilingual translations)” on page 18

General safety

Follow these rules to ensure general safety:

- Observe good housekeeping in the area of the machines during and after maintenance.
- When lifting any heavy object:
  1. Ensure that you can stand safely without slipping.
  2. Distribute the weight of the object equally between your feet.
  3. Use a slow lifting force. Never move suddenly or twist when you attempt to lift.
  4. Lift by standing or by pushing up with your leg muscles; this action removes the strain from the muscles in your back. Do not attempt to lift any object that weighs more than 16 kg (35 lb) or that you think is too heavy for you.
- Do not perform any action that causes hazards to the customer, or that makes the equipment unsafe.
- Before you start the machine, ensure that other service technicians and the customer's personnel are not in a hazardous position.
- Place removed covers and other parts in a safe place, away from all personnel, while you are servicing the machine.
- Keep your toolcase away from walk areas so that other people will not trip over it.
- Do not wear loose clothing that can be trapped in the moving parts of a machine. Ensure that your sleeves are fastened or rolled up above your elbows. If your hair is long, fasten it.
- Insert the ends of your necktie or scarf inside clothing or fasten it with a nonconductive clip, about 8 centimeters (3 inches) from the end.
- Do not wear jewelry, chains, metal-frame eyeglasses, or metal fasteners for your clothing, because metal objects are good electrical conductors.
- Wear safety glasses when you are hammering, drilling, soldering, cutting wire, attaching springs, using solvents, or working in any other conditions that might be hazardous to your eyes.
- After service, reinstall all safety shields, guards, labels, and ground wires. Replace any safety device that is worn or defective.
- Reinstall all covers correctly before returning the machine to the customer.
- Fan louvers on the machine help to prevent overheating of internal components. Do not obstruct fan louvers or cover them with labels or stickers.

© Copyright Lenovo 2014, 2015

Electrical safety

Observe the following rules when working on electrical equipment.

Important:

- Use only approved tools and test equipment. Some hand tools have handles covered with a soft material that does not insulate you when working with live electrical currents.
- Many customers have, near their equipment, rubber floor mats that contain small conductive fibers to decrease electrostatic discharges (ESD). Do not use this type of mat to protect yourself from electrical shock.
- Find the room emergency power-off (EPO) switch, disconnecting switch, or electrical outlet. If an electrical accident occurs, you can then operate the switch or unplug the power cord quickly.
- Do not work alone under hazardous conditions or near equipment that has hazardous voltages.
- Disconnect all power before:
  - Performing a mechanical inspection
  - Working near power supplies
  - Removing or installing main units
- Before you start to work on the machine, unplug the power cord. If you cannot unplug it, ask the customer to power off the wall box that supplies power to the machine, and to lock the wall box in the off position.
- If you need to work on a machine that has exposed electrical circuits, observe the following precautions:
  - Ensure that another person, familiar with the power-off controls, is near you. That person must be there to switch off the power, if necessary.
  - Use only one hand when working with powered-on electrical equipment; keep the other hand in your pocket or behind your back.

    CAUTION:
    An electrical shock can occur only when there is a complete circuit. By observing the above rule, you may prevent a current from passing through your body.
  - When using testers, set the controls correctly and use the approved probe leads and accessories for that tester.
  - Stand on suitable rubber mats (obtained locally, if necessary) to insulate you from grounds such as metal floor strips and machine frames.

  Observe the special safety precautions when you work with very high voltages. Instructions for these precautions are in the safety sections of maintenance information. Use extreme care when measuring high voltages.
- Regularly inspect and maintain your electrical hand tools for safe operational condition.
- Do not use worn or broken tools and testers.
- Never assume that power has been disconnected from a circuit. First, check that it has been powered off.
- Always look carefully for possible hazards in your work area. Examples of these hazards are moist floors, nongrounded power extension cables, power surges, and missing safety grounds.
- Do not touch live electrical circuits with the reflective surface of a plastic dental mirror. The surface is conductive; such touching can cause personal injury and machine damage.
- Do not service the following parts with the power on:
  - Power supply units
  - Pumps
  - Blowers and fans
  - Motor generators
  - Units similar to those listed above

  This practice ensures correct grounding of the units.

- If an electrical accident occurs:
  - Use caution; do not become a victim yourself.
  - Switch off power.
  - Send another person to get medical aid.

Safety inspection guide

The purpose of this inspection guide is to assist you in identifying potentially unsafe conditions. As each machine was designed and built, required safety items were installed to protect users and service technicians from injury. This guide addresses only those items. You should use good judgment to identify potential safety hazards due to attachment of non-ThinkPad features or options not covered by this inspection guide.

If any unsafe conditions are present, you must determine how serious the apparent hazard could be and whether you can continue without first correcting the problem.

Consider these conditions and the safety hazards they present:

- Electrical hazards, especially primary power (primary voltage on the frame can cause serious or fatal electrical shock)
- Explosive hazards, such as a damaged CRT face or a bulging capacitor
- Mechanical hazards, such as loose or missing hardware

To determine whether there are any potentially unsafe conditions, use the following checklist at the beginning of every service task. Begin the checks with the power off, and the power cord disconnected.

Checklist:

1. Check exterior covers for damage (loose, broken, or sharp edges).
2. Turn off the computer. Disconnect the power cord.
3. Check the power cord for:
   a. A third-wire ground connector in good condition. Use a meter to measure third-wire ground continuity for 0.1 ohm or less between the external ground pin and the frame ground.
   b. The power cord should be the authorized type specified for your computer. Go to: http://www.lenovo.com/serviceparts-lookup.
   c. Insulation must not be frayed or worn.
4. Check for cracked or bulging batteries.
5. Remove the cover.
6. Check for any obvious non-ThinkPad alterations. Use good judgment as to the safety of any non-ThinkPad alterations.
7. Check inside the unit for any obvious unsafe conditions, such as metal filings, contamination, water or other liquids, or signs of fire or smoke damage.
8. Check for worn, frayed, or pinched cables.
9. Check that the power-supply cover fasteners (screws or rivets) have not been removed or tampered with.

Handling devices that are sensitive to electrostatic discharge

Any computer part containing transistors or integrated circuits (ICs) should be considered sensitive to electrostatic discharge (ESD). ESD damage can occur when there is a difference in charge between objects. Protect against ESD damage by equalizing the charge so that the machine, the part, the work mat, and the person handling the part are all at the same charge.

Notes:

1. Use product-specific ESD procedures when they exceed the requirements noted here.
2. Ensure that the ESD protective devices you use have been certified (ISO 9000) as fully effective.

When handling ESD-sensitive parts:

- Keep the parts in protective packages until they are inserted into the product.
- Avoid contact with other people.
- Wear a grounded wrist strap against your skin to eliminate static on your body.
- Prevent the part from touching your clothing. Most clothing is insulative and retains a charge even when you are wearing a wrist strap.
- Use a grounded work mat to provide a static-free work surface. The mat is especially useful when handling ESD-sensitive devices.
- Select a grounding system, such as those listed below, to provide protection that meets the specific service requirement.

  Note: The use of a grounding system to guard against ESD damage is desirable but not necessary.

  – Attach the ESD ground clip to any frame ground, ground braid, or green-wire ground.
  – When working on a double-insulated or battery-operated system, use an ESD common ground or reference point. You can use coax or connector-outside shells on these systems.
  – Use the round ground prong of the ac plug on ac-operated computers.

Grounding requirements

Electrical grounding of the computer is required for operator safety and correct system function. Proper grounding of the electrical outlet can be verified by a certified electrician.

Safety notices (multilingual translations)

The safety notices in this section are provided in the following languages:

- English
- Arabic
- Brazilian Portuguese
- French
- German
- Hebrew
- Japanese
- Korean
- Spanish
- Traditional Chinese

DANGER

Before the computer is powered on after FRU replacement, make sure that all screws, springs, and other small parts are in place and are not left loose inside the computer. Verify this by shaking the computer and listening for rattling sounds. Metallic parts or metal flakes can cause electrical short circuits.

DANGER

Some standby batteries contain a small amount of nickel and cadmium. Do not disassemble a standby battery, recharge it, throw it into fire or water, or short-circuit it. Dispose of the battery as required by local ordinances or regulations. Use only the battery in the appropriate parts listing. Use of an incorrect battery can result in ignition or explosion of the battery.

DANGER

The battery pack contains small amounts of nickel. Do not disassemble it, throw it into fire or water, or short-circuit it. Dispose of the battery pack as required by local ordinances or regulations. Use only the battery in the appropriate parts listing when replacing the battery pack. Use of an incorrect battery can result in ignition or explosion of the battery.

DANGER

The lithium battery can cause a fire, an explosion, or a severe burn. Do not recharge it, remove its polarized connector, disassemble it, heat it above 100°C (212°F), incinerate it, or expose its cell contents to water. Dispose of the battery as required by local ordinances or regulations. Use only the battery in the appropriate parts listing. Use of an incorrect battery can result in ignition or explosion of the battery.

DANGER

If the LCD breaks and the fluid from inside the LCD gets into your eyes or on your hands, immediately wash the affected areas with water for at least 15 minutes. Seek medical care if any symptoms from the fluid are present after washing.

DANGER

To avoid shock, do not remove the plastic cover that protects the lower part of the inverter card.

DANGER

Though the main batteries have low voltage, a short-circuited or grounded battery can produce enough current to burn personnel or combustible materials.

DANGER

Unless hot swap is allowed for the FRU being replaced, do as follows before removing it: power off the computer, unplug all power cords from electrical outlets, remove the battery pack, and disconnect any interconnecting cables.

خطر

قبل اعادة تشغيل الحاسب بعد الانتهاء من استبدال FRU، تأكد من أنه قد تم اعادة كل من المسامير و السوست وكل الأجزاء الصغيرة الأخرى في أماكنهم ولم يتم فقدهم داخل الحاسب.
ويمكن التحقق من ذلك عن طريق هز الحاسب والاستماع لأي صوت صاخب يصدر منه.
قد تؤدي الأجزاء أو الرقائق المعدنية الى حدوث دائرة قصر.

خطر

تحتوي بعض البطاريات الاحتياطية على كمية صغيرة من مادتي النيكل والكادميوم. لا تقم بفك أو اعادة شحن البطارية الاحتياطية ولا تقم أيضا بالقاءها في النار أو الماء ولا تتسبب في احداث دائرة قصر بها. قم بالتخلص من البطارية كما هو موضح في القوانين المحلية.
استخدم نوع البطارية المحدد والذي يوصى باستخدامه. حيث أنه قد يؤدي استخدام نوع بطارية غير صحيح الى اشتعالها أو انفجارها.

خطر

تحتوي حزمة البطارية على كمية صغيرة من مادة النيكل. لا تقم بفكها أو القاءها في النار أو الماء ولا تتسبب في احداث دائرة قصر بها. تخلص من حزمة البطارية وفقا لما هو موضح في القوانين المحلية. قم، عند استبدال حزمة البطارية، باستخدام الأنواع المحددة فقط والتي يوصى باستخدامها. حيث أنه قد يؤدي استخدام نوع بطارية غير صحيح الى اشتعالها أو انفجارها.

خطر

قد تتسبب بطارية الليثيوم في حدوث حريق أو انفجار أو حدوث حروق شديدة. لا تقم باعادة شحن البطارية أو ازالة موصل الاستقطاب الخاص بها ولا تحاول أيضا فكها أو تسخينها لأكثر من ١٠٠ درجة منوية (٢١٢ فهرنهايت) أو حرقها أو تعريض محتويات الخانة الخاصة بها للماء. قم بالتخلص من البطارية وفقا لما هو موضح في القوانين المحلية. استخدم نوع البطارية المحدد والذي يوصى باستخدامه. حيث أنه قد يؤدي استخدام نوع بطارية غير صحيح الى اشتعالها أو انفجارها.

خطر

اذا ما انكسرت شاشة LCD ولامس السائل الداخلي عينيك أو يديك، قم في الحال بغسلهما بالماء لمدة لا تقل عن ١٥ دقيقة. اذا ما وجدت أي أعراض بعد الغسل اطلب عندئذ المساعدة الطبية.

خطر

لتجنب التعرض لأي صدمات، لا تقم بازالة الغطاء البلاستيكي الذي يحمي الجزء الأسفل من بطاقة العاكس.

خطر

على الرغم من أن البطاريات الرئيسية يكون لها جهد منخفض، الا أنه قد تقوم البطاريات التي حدث قصور بها أو التي تم توصيلها أرضيا باصدار تيار يكفي لحدوث حروق للأفراد أو تعرض المواد القابلة للاشتعال للحريق.

خطر

ما لم يتم السماح بالتبديل الفوري لأي FRU الجاري استبداله بدون ضرورة اغلاق النظام، قم بتنفيذ ما يلي قبل ازالته: قم بايقاف تشغيل الحاسب ونزع كل أسلاك الطاقة من المخارج الكهربائية وقم أيضا بازالة حزمة البطارية ثم قم بفصل أي كابلات متصلة.

PERIGO

Antes de ligar o computador após a substituição da FRU, certifique-se de que todos os parafusos, molas e outras peças pequenas estejam no lugar e não estejam soltos dentro do computador. Verifique isso sacudindo o computador e procurando ouvir sons de peças soltas. Peças metálicas ou lascas de metal podem causar curto-circuito.

PERIGO

Algumas baterias reserva contêm uma pequena quantidade de níquel e cádmio. Não desmonte uma bateria reserva, recarregue-a, jogue-a no fogo ou na água, ou deixe-a entrar em curto-circuito. Descarte a bateria conforme requerido pelas leis ou regulamentos locais. Use somente a bateria nas partes listadas apropriadas. O uso de uma bateria incorreta pode resultar em combustão ou explosão da bateria.

PERIGO

O pacote da bateria contém uma pequena quantidade de níquel. Não o desmonte, jogue-o no fogo ou na água, ou deixe-o entrar em curto-circuito. Descarte o pacote da bateria conforme requerido pelas leis ou regulamentos locais. Use somente a bateria nas partes listadas apropriadas ao substituir o pacote da bateria. O uso de uma bateria incorreta pode resultar em combustão ou explosão da bateria.

PERIGO

A bateria de lítio pode causar incêndio, explosão ou graves queimaduras. Não a recarregue, remova seu conector polarizado, desmonte-a, aqueça-a acima de 100°C (212°F), incinere-a, ou exponha o conteúdo de sua célula à água. Descarte a bateria conforme requerido pelas leis ou regulamentos locais. Use somente a bateria nas partes listadas apropriadas. O uso de uma bateria incorreta pode resultar em combustão ou explosão da bateria.

PERIGO

Se o LCD quebrar e o fluido de dentro dele entrar em contato com seus olhos ou com suas mãos, lave as áreas afetadas imediatamente com água durante pelo menos 15 minutos. Procure cuidados médicos se algum sintoma causado pelo fluido surgir após a lavagem.

PERIGO

Para evitar choque elétrico, não remova a capa plástica que protege a parte inferior da placa inversora.

PERIGO

Embora as principais baterias possuam baixa voltagem, uma bateria em curto-circuito ou aterrada pode produzir corrente o bastante para queimar materiais de pessoal ou inflamáveis.

PERIGO

A menos que uma hot swap seja permitida para a FRU que está sendo substituída, faça o seguinte antes de removê-la: desligue o computador, desconecte todos os cabos de energia das tomadas, remova o pacote de baterias e desconecte quaisquer cabos de interconexão.

DANGER

Avant de remettre l'ordinateur sous tension après remplacement d'une unité en clientèle, vérifiez que tous les ressorts, vis et autres pièces sont bien en place et bien fixées. Pour ce faire, secouez l'unité et assurez-vous qu'aucun bruit suspect ne se produit. Des pièces métalliques ou des copeaux de métal pourraient causer un court-circuit.

DANGER

Certaines batteries de secours contiennent du nickel et du cadmium. Ne les démontez pas, ne les rechargez pas, ne les exposez ni au feu ni à l'eau. Ne les mettez pas en court-circuit. Pour les mettre au rebut, conformez-vous à la réglementation en vigueur. Lorsque vous remplacez la pile de sauvegarde ou celle de l'horloge temps réel, veillez à n'utiliser que les modèles cités dans la liste de pièces détachées adéquate. Une batterie ou une pile inappropriée risque de prendre feu ou d'exploser.

DANGER

La batterie contient du nickel. Ne la démontez pas, ne l'exposez ni au feu ni à l'eau. Ne la mettez pas en court-circuit. Pour la mettre au rebut, conformez-vous à la réglementation en vigueur. Lorsque vous remplacez la batterie, veillez à n'utiliser que les modèles cités dans la liste de pièces détachées adéquate. En effet, une batterie inappropriée risque de prendre feu ou d'exploser.

DANGER

La pile de sauvegarde contient du lithium. Elle présente des risques d'incendie, d'explosion ou de brûlures graves. Ne la rechargez pas, ne retirez pas son connecteur polarisé et ne la démontez pas. Ne l'exposez pas à une temperature supérieure à 100°C, ne la faites pas brûler et n'en exposez pas le contenu à l'eau. Mettez la pile au rebut conformément à la réglementation en vigueur. Une pile inappropriée risque de prendre feu ou d'exploser.

DANGER

Si le panneau d'affichage à cristaux liquides se brise et que vous recevez dans les yeux ou sur les mains une partie du fluide, rincez-les abondamment pendant au moins quinze minutes. Consultez un médecin si des symptômes persistent après le lavage.

DANGER

Afin d'éviter tout risque de choc électrique, ne retirez pas le cache en plastique protégeant la partie inférieure de la carte d'alimentation.

DANGER

Bien que le voltage des batteries principales soit peu élevé, le court-circuit ou la mise à la masse d'une batterie peut produire suffisamment de courant pour brûler des matériaux combustibles ou causer des brûlures corporelles graves.

DANGER

Si le remplacement à chaud n'est pas autorisé pour l'unité remplaçable sur site que vous remplacez, procédez comme suit avant de retirer l'unité : mettez l'ordinateur hors tension, débranchez tous les cordons d'alimentation des prises de courant, retirez le bloc de batterie et déconnectez tous les câbles d'interconnexion.

VORSICHT

Bevor nach einem FRU-Austausch der Computer wieder angeschlossen wird, muß sichergestellt werden, daß keine Schrauben, Federn oder andere Kleinteile fehlen oder im Gehäuse vergessen wurden. Der Computer muß geschüttelt und auf Klappergeräusche geprüft werden. Metallteile oder-splitter können Kurzschlüsse erzeugen.

VORSICHT

Die Bereitschaftsbatterie, die sich unter dem Diskettenlaufwerk befindet, kann geringe Mengen Nickel und Cadmium enthalten. Sie darf nur durch die Verkaufsstelle oder den IBM Kundendienst ausgetauscht werden. Sie darf nicht zerlegt, wiederaufgeladen, kurzgeschlossen, oder Feuer oder Wasser ausgesetzt werden. Die Batterie kann schwere Verbrennungen oder Verätzungen verursachen. Bei der Entsorgung die örtlichen Bestimmungen für Sondermüll beachten. Beim Ersetzen der Bereitschafts-oder Systembatterie nur Batterien des Typs verwenden, der in der Ersatzteilliste aufgeführt ist. Der Einsatz falscher Batterien kann zu Entzündung oder Explosion führen.

VORSICHT

Akkus enthalten geringe Mengen von Nickel. Sie dürfen nicht zerlegt, wiederaufgeladen, kurzgeschlossen, oder Feuer oder Wasser ausgesetzt werden. Bei der Entsorgung die örtlichen Bestimmungen für Sondermüll beachten. Beim Ersetzen der Batterie nur Batterien des Typs verwenden, der in der Ersatzteilliste aufgeführt ist. Der Einsatz falscher Batterien kann zu Entzündung oder Explosion führen.

VORSICHT

Die Systembatterie ist eine Lithiumbatterie. Sie kann sich entzünden, explodieren oder schwere Verbrennungen hervorrufen. Batterien dieses Typs dürfen nicht aufgeladen, zerlegt, über 100°C erhitzt oder verbrannt werden. Auch darf ihr Inhalt nicht mit Wasser in Verbindung gebracht oder der zur richtigen Polung angebrachte Verbindungsstecker entfernt werden. Bei der Entsorgung die örtlichen Bestimmungen für Sondermüll beachten. Beim Ersetzen der Batterie nur Batterien des Typs verwenden, der in der Ersatzteilliste aufgeführt ist. Der Einsatz falscher Batterien kann zu Entzündung oder Explosion führen.

VORSICHT

Die Leuchtstoffröhre im LCD-Bildschirm enthält Quecksilber. Bei der Entsorgung die örtlichen Bestimmungen für Sondermüll beachten. Der LCD-Bildschirm besteht aus Glas und kann zerbrechen, wenn er unsachgemäß behandelt wird oder der Computer auf den Boden fällt. Wenn der Bildschirm beschädigt ist und die darin befindliche Flüssigkeit in Kontakt mit Haut und Augen gerät, sollten die betroffenen Stellen mindestens 15 Minuten mit Wasser abgespült und bei Beschwerden anschließend ein Arzt aufgesucht werden.

VORSICHT

Aus Sicherheitsgründen die Kunststoffabdeckung, die den unteren Teil der Spannungswandlerplatine umgibt, nicht entfernen.

VORSICHT

Obwohl Hauptbatterien eine niedrige Spannung haben, können sie doch bei Kurzschluß oder Erdung genug Strom abgeben, um brennbare Materialien zu entzünden oder Verletzungen bei Personen hervorzurufen.

VORSICHT

Wenn ein Austausch der FRU bei laufendem Betrieb nicht erlaubt ist, gehen Sie beim Austausch der FRU wie folgt vor: Schalten Sie den Computer aus, ziehen Sie alle Netzkabel von den Netzsteckdosen ab, entfernen Sie den Akku und ziehen Sie alle miteinander verbundenen Kabel ab.

סכנה

לפני הפעלת המחשב לאחר החלפת FRU יש לוודא שכל הברגים, הקפיצים, וחלקים קטנים אחרים נמצאים במקומם ואינם חופשיים לזוז בתוך המחשב. כדי לוודא זאת, יש לטלטל את המחשב ולחקשיב לגילוי קולות שקשוק. חלקי או שבבי מתכת עלולים לגרום לקצרים חשמליים.

סכנה

סוללות המתנה מסוימות מכילות כמות קטנה של ניקל וקדמיום. אין לפרק סוללת המתנה, לטעון אותה מחדש, להשליך אותה לאש או למים או לקצר אותה. יש לסלק את הסוללה כנדרש על ידי התקנות והחוקים המקומיים. יש להשתמש רק בסוללה המופיעה ברשימת החלקים המתאימה. שימוש בסוללה לא מתאימה עלול לגרום להצתה או התפוצצות של הסוללה.

סכנה

מארז הסוללה מכיל כמות קטנה של ניקל וקדמיום. אין לפרק את מארז הסוללה, להשליך אותו לאש או למים או לקצר אותו. יש לסלק את מארז הסוללה הסוללה כנדרש על ידי התקנות והחוקים המקומיים. יש להשתמש רק בסוללה המופיעה ברשימת החלקים המתאימה בזמן החלפת מארז הסוללה. שימוש בסוללה לא מתאימה עלול לגרום להצתה או התפוצצות של הסוללה.

סכנה

סוללת הליתיום עלולה לגרום לשריפה, להתפוצצות או לכוויות קשות. אין לטעון אותה מחדש, לסלק את המחבר המקוטב שלה, לפרק אותה או לחמם אותה לטמפרטורה העולה על 100 מעלות צלזיוס. אין לשרוף את הסוללה ואין לחשוף את תוכן התא למים. יש לסלק את הסוללה כנדרש בתקנות ובחוקים המקומיים. יש להשתמש רק בסוללה המופיעה ברשימת החלקים המתאימים. שימוש בסוללה אחרת עלול לגרום לסכנת שריפה או התפוצצות.

סכנה

אם מסך הגביש הנוזלי (LCD) נשבר והנוזל מתוך המסך בא במגע עם עיניכם או ידיכם, שטפו את האזורים הנגועים מיד במים במשך 15 דקות לפחות. פנו לקבלת עזרה רפואית אם תסמינים הנובעים מחמגע עם הנוזל נמשכים לאחר השטיפה.

סכנה

כדי למנוע התחשמלות, אין להסיר את מכסה הפלסטיק המגן על חלקו התחתון של הכרטיס החכם.

סכנה

אף שהסוללות הראשיות הן בעלות מתח נמוך, סוללה מקוצרת או מוארקת עלולה להפיק זרם מספיק לגרימת כוויות או להצתת חומרים דליקים.

סכנה

אלא אם כן מותרת ‘החלפה חמה’ של ה-FRU המוחלף, פעלו כדלהלן לפני הסרתו:
כבו את המחשב, נתקו את כל כבלי החשמל מהשקעים, הוציאו את מארז הסוללות ונתקו את כל הכבלים המחוברים.

危険

FRU の交換後、 ThinkPad の電源を入れる前に、ねじ、バネ、その他の小さな部品がすべて正しい位置にあり、また ThinkPad の内部で緩んでいないことを確認してください。
これを確認するには、 ThinkPad を振って、カチャカチャと音がしないか確かめます。金属部品や金属破片はショートの原因になることがあります。

危険

予備バッテリーの中には少量のニッケルとカドミウムが含まれているものがあります。したがって、予備バッテリーの分解、再充電、火または水の中への投棄、またはショートさせることは決して行わないでください。バッテリーを廃棄する場合は地方自治体の条例に従ってください。適切なパーツ・リストにあるバッテリーだけを使用してください。誤ったバッテリーを使用すると、バッテリーが発火したり、爆発したりすることがあります。

危険

バッテリー・パックには少量のニッケルが含まれています。バッテリー・パックを分解したり、火または水の中に投げ込んだり、ショートさせないでください。バッテリー・パックの廃棄にあたっては、地方自治体の条例または規則に従ってください。バッテリー・パックを交換するときは、適切なパーツ・リストにあるバッテリーだけを使用してください。誤ったバッテリーを使用すると、バッテリーが発火したり、爆発したりすることがあります。

危険

リチウム・バッテリーは、火災、爆発、または重症のやけどを引き起こすことがあります。バックアップ・バッテリーの充電、その極性コネクターの取り外し、バッテリー本体の分解、100 ℃ (212 ˚F) 以上への加熱、焼却、電池の中身を水に浸すことはしないでください。バッテリーを廃棄する場合は地方自治体の条例に従ってください。適切なパーツ・リストにあるバッテリーだけを使用してください。誤ったバッテリーを使用すると、バッテリーが発火したり、爆発したりすることがあります。

危険

LCD が破損し、 LCD の中の液体が目に入ったり、手に触れたりした場合は、液体が触れた部分を少なくとも 15 分間洗い流してください。洗い流した後に、液体によって何らかの症状が現れた場合は、医師の治療を受けてください。

危険

感電を防ぐため、インバーター・カードの下部を保護しているプラスチック・カバーを外さないでください。

危険

メイン・バッテリーの電圧は低くても、ショートしたり、接地したバッテリーが、作業者にやけどを負わせたり、可燃物を燃やすだけの電流を発生させる場合があります。

危険

交換しようとしている FRU がホット・スワップに対応していない場合、それを取り外す前に、コンピューターの電源をオフにし、すべての電源コードをコンセントから抜き、バッテリー・パックを取り外して、相互接続しているケーブルをすべて切り離してください。

위험

FRU를 교체하고 나서 컴퓨터 전원을 켜기 전에 모든 나사, 스프링 및 기타 작은 부품들이 올바른 위치에 있는지, 컴퓨터 내부에 단단하게 연결되어 있는지 확인하십시오. 컴퓨터를 흔들어 달깍거리는 소리가 나지 않는지 확인하십시오. 금속 부품 또는 금속 조각은 누전을 일으킬 수 있습니다.

위험

일부 보조 배터리에는 소량의 니켈 및 카트뮴이 포함되어 있습니다. 보조 배터리를 분해하거나, 다시 충전하거나, 불 또는 물에 던지거나, 단락시키지 마십시오. 배터리 팩을 폐기할 때에는 해당 지역의 법률 규정을 따르십시오. 배터리 팩을 교체할 때에는 올바른 배터리만 사용하십시오. 올바르지 않은 배터리를 사용하면 배터리가 발화되거나 폭발할 수 있습니다.

위험

배터리 팩에는 소량의 니켈이 포함되어 있습니다. 배터리 팩을 분해하거나, 불 또는 물에 던지거나, 단락시키지 마십시오. 배터리 팩을 폐기할 때에는 해당 지역의 법률 규정을 따르십시오. 배터리 팩을 교체할 때에는 올바른 배터리만 사용하십시오. 올바르지 않은 배터리를 사용하면 배터리가 발화되거나 폭발할 수 있습니다.

위험

리튬 배터리는 화재, 폭발 또는 심각한 화상을 일으킬 수 있습니다. 리튬 배터리를 다시 충전하거나, 극성 커넥터를 제거하거나, 분해하거나, 100C(212F) 이상으로 가열하거나, 소각하거나, 전지 내용물을 물에 노출시키지 마십시오. 배터리를 폐기할 때에는 해당 지역을 법률 규정을 따르십시오. 올바른 배터리만 사용하십시오. 올바르지 않은 배터리를 사용하면 배터리가 발화되거나 폭발할 수 있습니다.

위험

LCD가 파손되어 LCD 내부의 액체가 눈에 들어가거나 손에 묻으면 즉시 깨끗한 물로 15분 이상 닦아 내십시오. 씻은 후에 조금이라도 이상을 느끼면 즉시 병원에 가서 의사의 진찰을 받아야 합니다.

위험

전기적 위험을 방지하려면 인버터 카드의 아래 부분을 보호하는 플라스틱 덮개를 제거하지 마십시오.

위험

기본 배터리의 전압은 낮지만, 단락되거나 접지된 배터리는 화상을 입히기에 충분한 전류와 가연성 물질을 발생시킬 수 있습니다.

위험

FRU 교체 시 Hot Swap이 지원되지 않는 경우, FRU를 제거하기 전에 컴퓨터의 전원을 끄고, 전기 콘센트에서 전원 코드를 분리하고, 배터리를 제거한 후, 연결된 모든 케이블을 분리하십시오.

PELIGRO

Antes de encender el sistema despues de sustituir una FRU, compruebe que todos los tornillos, muelles y demás piezas pequeñas se encuentran en su sitio y no se encuentran sueltas dentro del sistema. Compruébelo agitando el sistema y escuchando los posibles ruidos que provocarían. Las piezas metálicas pueden causar cortocircuitos eléctricos.

PELIGRO

Algunas baterías de reserva contienen una pequeña cantidad de níquel y cadmio. No las desmonte, ni recargue, ni las eche al fuego o al agua ni las cortocircuite. Deséchelas tal como dispone la normativa local. Utilice sólo baterías que se encuentren en la lista de piezas. La utilización de una batería no apropiada puede provocar la ignición o explosión de la misma.

PELIGRO

Las baterías contienen pequeñas cantidades de níquel. No las desmonte, ni recargue, ni las eche al fuego o al agua ni las cortocircuite. Deséchelas tal como dispone la normativa local. Utilice sólo baterías que se encuentren en la lista de piezas al sustituir la batería. La utilización de una batería no apropiada puede provocar la ignición o explosión de la misma.

PELIGRO

La batería de repuesto es una batería de litio y puede provocar incendios, explosiones o quemaduras graves. No la recargue, ni quite el conector polarizado, ni la desmonte, ni caliente por encima de los 100°C (212°F), ni la incinere ni exponga el contenido de sus celdas al agua. Deséchela tal como dispone la normativa local.

PELIGRO

Si la LCD se rompe y el fluido de su interior entra en contacto con sus ojos o sus manos, lave inmediatamente las áreas afectadas con agua durante 15 minutos como mínimo. Obtenga atención medica si se presenta algún síntoma del fluido despues de lavarse.

PELIGRO

Para evitar descargas, no quite la cubierta de plástico que rodea la parte baja de la tarjeta invertida.

PELIGRO

Aunque las baterías principales tienen un voltaje bajo, una batería cortocircuitada o con contacto a tierra puede producir la corriente suficiente como para quemar material combustible o provocar quemaduras en el personal.

PELIGRO

Salvo que se permita el intercambio en caliente para la unidad sustituible localmente, realice lo siguiente antes de extraerla: apague el sistema, desconecte todos los cables de alimentación de las tomas de alimentación eléctrica, extraiga la batería y desconecte los cables de interconexión.

危險

完成 FRU 更換之後，在開啟電腦的電源之前，請確定所有螺絲、彈簧及其他小零件都已歸位，沒有遺留在電腦內部。
若要確認這一點，請搖晃電腦，聽聽看是否有卡嗒的聲響。
金屬零件或儀錶的火花會造成電線短路。

危險

部分備用電池含有微量的鎳和鎘。請勿拆開備用電池、再充電、丟入火或水中，或使其形成短路。請按照當地法令或規定來棄置電池。

僅限使用零件清單中的電池。使用不適當的電池會導致電池起火或爆炸。

危險

電池套件含有微量的鎳。請勿拆開電池套件、丟入火或水中，或使其形成短路。
請按照當地法令或規定來棄置電池套件。

更換電池套件時，僅限使用零件清單中的電池。使用不適當的電池會導致電池起火或爆炸。

危險

鋰電池會導致起火、爆炸或嚴重燒傷。請勿再充電、拔除其電極接頭、拆開、加熱超過 100°C (212°F) 、焚燒，或讓電池組成物浸到水。請按照當地法令或規定來棄置電池。
僅限使用零件清單中的電池。使用不適當的電池會導致電池起火或爆炸。

危險

如果 LCD 破裂導致 LCD 流出的液體沾到您的眼睛或手，請立即以清水沖洗沾染部位至少 15 分鐘。如果在清洗後出現該液體所造成的任何症狀，請就醫治療。

危險

為避免電擊，請勿拆下轉換卡下面的塑膠護蓋。

危險

雖然主電池的電壓很低，但短路或接地電池所產生的電流，仍足以使人燒傷或
使可燃物質起火。

危險

除非 FRU 允許以熱抽換來替換，否則請依下列方式將其移除：將電腦關機，拔除插
座上所有電源線，移除電池包，並拔開任何交互連接的線材。

Laser compliance statement (multilingual translations)

The laser compliance statements in this section are provided in the following languages:

- English
- Arabic
- Brazilian Portuguese
- French
- German
- Hebrew
- Japanese
- Korean
- Spanish
- Traditional Chinese

CAUTION:
When laser products (such as CD-ROMs, DVD drives, fiber optic devices, or transmitters) are installed, note the following:

- **Do not remove the covers. Removing the covers of the laser product could result in exposure to hazardous laser radiation. There are no serviceable parts inside the device.**
- **Use of controls or adjustments or performance of procedures other than those specified herein might result in hazardous radiation exposure.**

DANGER

Some laser products contain an embedded Class 3A or Class 3B laser diode. Note the following.

Laser radiation when open. Do not stare into the beam, do not view directly with optical instruments, and avoid direct exposure to the beam.

تحذير:
عند تثبيت منتجات الليزر (مثل أقراص CD-ROM أو محركات تشغيل أقراص DVD أو أجهزة الألياف البصرية أو النواقل)، لاحظ ما يلي:

- لا تقم بنزع الغطاء. قد ينتج عن نزع غطاء منتج ليزر التعرض لأشعة ليزر في منتهى الخطورة. لا توجد أجزاء يمكن صيانتها داخل الجهاز.
- قد ينتج عن استخدام مفاتيح أو تنفيذ عمليات ضبط أو اجراءات بطريقة مختلفة عما هو محدد هنا التعرض لأشعة ليزر في منتهى الخطورة.

خطر

تحتوي بعض منتجات الليزر على صمام ثنائي ليزري مضمن من Class 3A أو Class 3B. لاحظ ما يلي.
توجد أشعة ليزر عند الفتح. لا تنظر للشعاع ولا تنظر بطريقة مباشرة باستخدام أدوات ضوئية وتجنب التعرض المباشر للشعاع.

CUIDADO:
Quando produtos a laser (como CD-ROMs, unidades de DVD, dispositivos de fibra ótica ou transmissores) estão instalados, observe o seguinte:

- **Não remova as tampas. A remoção das tampas do produto a laser pode resultar em exposição prejudicial à radiação de laser. Não há peças que permitam manutenção no interior do dispositivo.**
- **A utilização de controles ou ajustes ou a execução de procedimentos diferentes daqueles especificados aqui pode resultar em exposição perigosa à radiação.**

PERIGO

Algumas produtos a laser contêm um diodo de laser Classe 3A ou Classe 3B integrado. Observe o seguinte:

Radiação a laser quando aberta. Não olhe diretamente para o feixe a olho nu ou com instrumentos óticos e evite exposição direta ao feixe.

ATTENTION :
Si des produits laser (tels que des unités de CD, DVD, à fibre optique ou des émetteurs) sont installés, lisez les informations suivantes :

- **Ne retirez pas les carters. En ouvrant le produit laser, vous vous exposez au rayonnement dangereux du laser. Aucune pièce de l'unité n'est réparable.**
- **Pour éviter tout risque d'exposition au rayon laser, respectez les consignes de réglage et d'utilisation des commandes, ainsi que les procédures décrites dans le présent manuel.**

DANGER

Certains produits à laser contiennent une diode à laser intégrée de classe 3A ou 3B. Prenez connaissance des informations suivantes.

Rayonnement laser lorsque le carter est ouvert. Evitez toute exposition directe au rayon laser. Evitez de regarder fixement le faisceau ou de l'observer à l'aide d'instruments optiques.

Vorsicht:
Bei der Installation von Lasergeräten (wie CD-ROM-Laufwerken, DVD-Laufwerken, Einheiten mit Lichtwellenleitertechnik oder Sendern) Folgendes beachten:

- **Die Abdeckungen nicht entfernen. Durch Entfernen der Abdeckungen des Lasergeräts können gefährliche Laserstrahlungen freigesetzt werden. Das Gerät enthält keine zu wartenden Teile.**
- **Werden Steuerelemente, Einstellungen oder Durchführungen von Prozeduren anders als hier angegeben verwendet, kann gefährliche Laserstrahlung auftreten.**

Gefahr

Einige Lasergeräte enthalten eine Laserdiode der Klasse 3A oder 3B. Beachten Sie Folgendes:

Laserstrahlung bei geöffneter Verkleidung. Nicht in den Strahl blicken. Keine Lupen oder Spiegel verwenden. Strahlungsbereich meiden.

זהירות:
כאשר מוצרי לייזר (כגון תקליטורים, כונני DVD, התקני סיבים אופטיים או משדרים) מותקנים, שימו לב להנחיות הבאות:

- אל תסירו את הכיסויים. הסרת הכיסויים של מוצר הלייזר עלולה לגרום לחשיפה מסוכנת לקרינת לייזר. ההתקן אינם כוללים רכיבים להחלפה עצמית.
- שימוש בבקרות ובהתאמות שלא צוינו או ביצוע תהליכים שלא צוינו, יכולים לגרום לחשיפה מסוכנת לקרינה.

סכנה

כמה ממוצרי הלייזר מכילים דיודת לייזר מובנית Class 3A או Class 3B. שימו לב לדברים שלהלן.
קיימת פליטת קרני לייזר כאשר המוצר פתוח. אל תביטו ישירות אל הקרן, אל תביטו אל הקרן ישירות דרך אמצעים אופטיים, והימנעו מחשיפה ישירה לקרן.

警告：
レーザー製品 (CD-ROM、DVD ドライブ、光ファイバー装置、または送信機など) を取り付ける場合には、以下のことに注意してください。

- カバーを外さないこと。カバーを取り外すと有害なレーザー光を浴びることがあります。この装置の内部には保守が可能な部品はありません。
- 本書で指定された内容以外の、お客様による整備、調整、または手順を行った場合、レーザー放射の危険があります。

危険

一部のレーザー製品には、クラス 3A またはクラス 3B のレーザ ー・ダイオードが組み込まれています。次の点に注意してください。

開けるとレーザー光が放射されます。光線を見つめたり、光学機械を使って直接見たり、光線を直接浴びることは避けてください。

경고:
레이저 제품(CD-ROM, DVD 드라이브, 광섬유 장치 또는 송신기)이 설치되어 있는 경우, 다음과 같은 취급 주의사항을 참고하십시오.

- **덮개를 제거하지 마십시오. 레이저 제품의 덮개를 제거하면 유해한 레이저 복사에 노출될 위험이 있습니다. 장치 내부에는 사용자가 수리할 수 있는 부분이 없습니다.**
- **본 내용에서 설명한 이외의 방법으로 드라이브를 조정하거나 제어 또는 작동하는 경우, 해로운 레이저 복사에 노출될 수 있습니다.**

위험

일부 레이저 제품은 임베디드 클래스 3A 또는 클래스 3B 레이저 다이오드가 포함되어 있습니다. 다음 주의사항을 유의하십시오.

드라이브의 덮개를 열면 전자파가 발생합니다. 광선 또는 광 장치를 직접 보거나 광선에 노출되지 않도록 주의하십시오.

PRECAUCIÓN:
Cuando haya instalados productos láser (por ejemplo, unidades de CD-ROM, unidades de DVD, dispositivos de fibra óptica o transmisores), tenga en cuenta lo siguiente:

- **No extraiga las cubiertas. La extracción de las cubiertas del producto láser podría producir una exposición a radiación láser peligrosa. No hay ninguna pieza dentro del dispositivo que pueda reparar.**
- **La utilización de controles, ajustes o la realización de procedimientos diferentes a los especificados puede dar como resultado una exposición peligrosa a radiaciones.**

PELIGRO

Algunos productos láser contienen un diodo láser de Clase 3A o Clase 3B incorporado. Tenga en cuenta lo siguiente.

Emite radiación láser cuando está abierto. No fije la vista en el rayo, no lo mire directamente con instrumentos ópticos y evite la exposición directa al rayo.

警告：
安裝雷射產品（如 CD-ROM、DVD 光碟機、光纖裝置或轉送器）時，請注意下列事項：

- **請勿卸下外蓋。卸下雷射產品的外蓋可能導致曝露於危險的雷射輻射。裝置內沒有可維修的零件。**
- **若不遵守本文規定的控制、調整或操作程序，可能會導致危險的輻射外洩。**

危險

某些雷射產品包含內嵌式 3A 類或 3B 類雷射二極體。這類光碟機的使用者應注意下列聲明。

在開啟光碟機時，會有雷射輻射。請勿直視光束或以光學儀器直接觀看光束，並避免直接暴露在光束中。

Chapter 2. Important service information

This chapter introduces the following important service information that applies to all machine types supported by this manual:

- "Strategy for replacing FRUs" on page 25
  - "Strategy for replacing a hard disk drive or a solid-state drive" on page 25
  - "Important notice for replacing a system board" on page 26
  - "How to use error codes" on page 26
- "Strategy for replacing FRUs for CTO, special-bid, and standard models" on page 26
  - "Product definition" on page 26
  - "**FRU identification**" on page 26

Important:

- Advise customers to contact the Lenovo® Customer Support Center if they need any assistance in obtaining or installing any software fixes, drivers, and UEFI BIOS downloads. Telephone numbers for Lenovo Support are available at:
  http://www.lenovo.com/support/phone
- System disassembly and reassembly videos that show the FRU removal or replacement procedures for the Lenovo authorized service technicians are available at:
  http://www.lenovoservicetraining.com/ion/

Strategy for replacing FRUs

Before replacing parts:

Ensure that all software fixes, drivers, and UEFI BIOS downloads are installed before you replace any FRUs listed in this manual.

After a system board is replaced, ensure that the latest UEFI BIOS is loaded to the system board before you complete the service action.

To download and install software fixes, drivers, and UEFI BIOS, go to http://www.lenovo.com/ThinkPadDrivers and follow the instructions on the screen.

Use the following strategy to prevent unnecessary expense for replacing and servicing FRUs:

- If you are instructed to replace a FRU but the replacement does not correct the problem, reinstall the original FRU before you continue.
- Some computers have both a processor board and a system board. If you are instructed to replace either the processor board or the system board, and replacing one of them does not correct the problem, reinstall that board, and then replace the other one.
- If an adapter or a device consists of more than one FRU, any of the FRUs might be the cause of the error. Before replacing the adapter or device, remove the FRUs, one by one, to see if the symptoms change. Replace only the FRU that changed the symptoms.

Strategy for replacing a hard disk drive or a solid-state drive

Always try to run a low-level format operation before replacing a hard disk drive or a solid-state drive. This will cause all customer data on the drive to be lost. Ensure that the customer has a current backup of the data before you perform this task.

© Copyright Lenovo 2014, 2015

Attention: The drive startup sequence in the computer you are servicing might have been changed. Be extremely careful during write operations such as copying, saving, or formatting. If you select an incorrect drive, data or programs can be overwritten.

Important notice for replacing a system board

Some components mounted on a system board are very sensitive. Improper handling of a system board can cause damage to those components, and may cause a system malfunction.

Attention: When handling a system board:

- Do not drop a system board or apply any excessive force to it.
- Avoid rough handling of any kind.
- Avoid bending a system board and hard pushing to prevent cracking at each Ball Grid Array (BGA) chipset.

How to use error codes

Use the error codes displayed on the screen to diagnose failures. If more than one error code is displayed, begin the diagnosis with the first error code. Whatever causes the first error code might also cause false error codes. If no error code is displayed, see whether the error symptom is listed in the “Symptom-to-FRU Index” section.

Strategy for replacing FRUs for CTO, special-bid, and standard models

This topic provides information about the model types and FRU identification.

Product definition

This topic introduces different model types and how to identify each type.

Dynamic Configure To Order (CTO) model

This model provides the ability for a customer to configure a Lenovo solution from a Web site, and have this configuration sent to fulfillment, where it is built and shipped directly to the customer. The machine label and eSupport will load these products as the 4-character MT, 4-character model, and 2-character country code. The model is “CTO1” and the default country code is “WW” (example: 20AACTO1WW).

Special-bid model

This model is a unique configuration that has been negotiated between Lenovo and the customer. A unique MTM consists of a 4-character MT, a 4-character model, and a numeric 2-character country code is provided to the customer to place orders (example: 20AA000955). The country code assigned is numeric and does not designate a specific country or region. The custom model factsheet for the MTM indicates which country the special-bid MTM is set up for. Special-bid offering is not generally announced.

Standard model

Standard models (fixed configuration) are announced and offered to all customers. The MTM portion of the machine label consists of a 4-character MT, a 4-character model, and an alphabetic 2-character country code. The country code assigned is alphabetic and represents a designated country or region (example: 20AA0009UK).

FRU identification

Use Lenovo eSupport to identify major FRUs, FRU part numbers, and FRU descriptions for a product at an MT - serial number level. Examples of major FRUs are hard disk drive, system board, and liquid crystal display (LCD).

To identify the major FRUs for a product, do the following:

1. Go to:
   http://support.lenovo.com/ibasepartslookup
2. Type the Machine Type and Serial Number in the corresponding fields.
3. Click **Submit**.

eSupport also can be used to view the general FRU list for a product. The FRU list is a general list of components and does not contain specific model information.

To get the general FRU list for a product, do the following:

1. Go to:
   http://www.lenovo.com/support
2. Follow the instructions on the screen to select a product.
3. Click the **Product & Parts** tab.
4. Select **System Service Parts** to view a general FRU list.

Chapter 3. General checkout

This chapter presents following information:

- "What to do first" on page 29
- "Checkout guide" on page 30
  - "Lenovo Solution Center" on page 30
  - "Quick test programs" on page 30
  - "UEFI diagnostic program" on page 31
  - "Bootable diagnostic programs" on page 32
- "Power system checkout" on page 33

Some descriptions in this chapter might not apply to your particular computer.

Before you go to the checkout guide, be sure to read the following important notes.

Important notes:

- **Only certified trained personnel should service the computer.**
- **Before replacing any FRU, read the entire page on removing and replacing FRUs.**
- **When you replace FRUs, it is recommended to use new nylon-coated screws.**
- **Be extremely careful during such write operations as copying, saving, or formatting.** Drives in the computer that you are servicing sequence might have been altered. If you select an incorrect drive, data or programs might be overwritten.
- **Replace a FRU only with another FRU of the correct model.** When you replace a FRU, ensure that the model of the machine and the FRU part number are correct.
- **A FRU should not be replaced because of a single, unreproducible failure.** Single failures can occur for a variety of reasons that have nothing to do with a hardware defect, such as cosmic radiation, ESD, or software errors. Consider replacing a FRU only when a problem recurs. If you suspect that a FRU is defective, clear the error log and run the test again. If the error does not recur, do not replace the FRU.
- **Be careful not to replace a nondefective FRU.**

What to do first

When you return a FRU, you must include the following information in the parts exchange form or parts return form that you attach to it:

1. Name and phone number of service technician
2. Date of service
3. Date on which the machine failed
4. Date of purchase
5. Failure symptoms, error codes appearing on the display, and beep symptoms
6. Procedure index and page number in which the failing FRU was detected
7. Failing FRU name and part number
8. Machine type, model number, and serial number
9. Customer's name and address

Note: During the warranty period, the customer may be responsible for repair costs if the computer damage was caused by misuse, accident, modification, unsuitable physical or operating environment, or improper maintenance by the customer. Following is a list of some common items that are not covered under warranty and some symptoms that might indicate that the system was subject to stress beyond normal use.

Before checking problems with the computer, determine whether the damage is covered under the warranty by referring to the following list:

© Copyright Lenovo 2014, 2015

The following are not covered under warranty:
- LCD panel cracked from the application of excessive force or from being dropped
- Scratched (cosmetic) parts
- Distortion, deformation, or discoloration of the cosmetic parts
- Plastic parts, latches, pins, or connectors that have been cracked or broken by excessive force
- Damage caused by liquid spilled into the system
- Damage caused by the improper insertion of a PC Card or the installation of an incompatible card
- Improper disc insertion or use of an optical drive
- Diskette drive damage caused by pressure on the diskette drive cover, foreign material in the drive, or the insertion of a diskette with multiple labels
- Damaged or bent diskette eject button
- Fuses blown by attachment of a nonsupported device
- Forgotten computer password (making the computer unusable)
- Sticky keys caused by spilling a liquid onto the keyboard
- Use of an incorrect ac power adapter on laptop products

The following symptoms might indicate damage caused by nonwarranted activities:
- Missing parts might be a symptom of unauthorized service or modification.
- Check for obvious damage to a hard disk drive. If the spindle of a hard disk drive becomes noisy, the hard disk drive might have been dropped or subject to excessive force.

Checkout guide

Use the following procedures as a guide in identifying and correcting problems with the ThinkPad notebook computer.

Note: The diagnostic tests are intended to test only ThinkPad products. The use of non-ThinkPad products, prototype cards, or modified options can lead to false indications of errors and invalid system responses.

1. Identify the failing symptoms in as much detail as possible.
2. Verify the symptoms. Try to re-create the failure by running the diagnostic test or by repeating the operation.

Lenovo Solution Center

The Lenovo Solution Center program enables you to troubleshoot and resolve computer problems. It combines diagnostic tests, system information collection, security status, and support information, along with hints and tips for maximum system performance.

The Lenovo Solution Center program is available for download at http://www.lenovo.com/diags.

To run the Lenovo Solution Center program, go to Control Panel and click **System and Security → Lenovo - System Health and Diagnostics**, and then follow the instructions on the screen.

For more information about the Lenovo Solution Center program, refer to the help information system of the program.

Quick test programs

Run the following quick test programs to troubleshoot and resolve computer problems, especially when the computer does not have the Lenovo Solution Center program installed.

- **Lenovo Hard Drive Quick Test**
- **Lenovo Memory Quick Test**
- **Lenovo Wireless Quick Test**

- **Lenovo PCI Express Quick Test**
- **Lenovo RAID Quick Test**
- **Lenovo Motherboard Bus Quick Test**

Lenovo provides the following quick test programs:

The quick test programs are applicable on the following operating systems:

- Microsoft® Windows® 8.1
- Microsoft Windows 7
- Microsoft Windows XP
- Microsoft Windows Server® 2003
- Microsoft Windows Server 2008

To download and install a quick test program, go to http://www.lenovo.com/diags and follow the instructions on the Web site.

To run a test using a quick test program, do the following:

1. Go to the C:\SWTOOLS\ldiag directory.
2. Double-click the lsc_lite.exe file.
3. When the **User Account Control** window opens, if any, click **Yes**.
4. Select the device class to be tested.
5. Select the devices to be tested.
6. Select the test to be performed.
7. Follow the instructions on the screen to start the test. When a problem is detected, information messages are displayed. Refer to the messages to troubleshoot the problem.

UEFI diagnostic program

A UEFI diagnostic program is preinstalled on the computer. This program enables you to view system information and test some hardware devices in your computer, such as memory, storage devices, the LCD, and system board buses.

To run the UEFI diagnostic program, do the following:

1. Turn on the computer. If the computer cannot be turned on, go to “Power system checkout” on page 33, and check the power sources. If an error code is displayed, go to “Symptom-to-FRU index” on page 43 for error code descriptions and troubleshooting hints.
2. When the ThinkPad logo is displayed, repeatedly press and release the F10 key. The main screen of the UEFI diagnostic program is displayed.
3. Follow the instructions on the screen to use the program.

The following table displays the main items of the UEFI diagnostic program. Depending on the model, the items might differ slightly.

Table 1. Items on the main screen of the UEFI diagnostic program

Tests	Tools
• Memory quick test • Memory extended test • Memory bit fade test (180 min) • Quick storage device test • LCD test • PCI-e test • Motherboard buses test • Exit application	• System information • Generate configuration file • Execute from configuration file • Recover bad sectors tool

Note: The recover bad sectors tool is only available on computers that have hard disk drives installed.

Bootable diagnostic programs

If the computer you are servicing is not installed with the UEFI diagnostic program, you can download a bootable diagnostic program from the Lenovo Support Web site. The bootable diagnostic program enables you to view system information and test some hardware devices in your computer, such as memory, storage devices, the LCD, and system board buses. To use the bootable diagnostic program, you can create a bootable diagnostic medium using a USB device or disc.

To create a bootable diagnostic medium, do the following:

1. Go to http://www.lenovo.com/diags.
2. Click **Lenovo Bootable Diagnostics**.
3. Follow the instructions on the Web site to create a bootable diagnostic medium on a USB device or disc.

To use the diagnostic medium you have created, do one of the following:

- If you have created the bootable diagnostic medium on a USB device, do the following:
  1. Attach the USB device to the computer.
  2. Turn on the computer. If the computer cannot be turned on, go to “Power system checkout” on page 33, and check the power sources. If an error code is displayed, go to “Symptom-to-FRU index” on page 43 for error code descriptions and troubleshooting hints.
  3. When the ThinkPad logo is displayed, repeatedly press and release the F12 key. When the Boot Menu window opens, release the F12 key.
  4. Use the arrow keys to select **USB HDD** and then press Enter. The diagnostic program launches.
  5. Follow the instructions on the screen to use the diagnostic program.
- If you have created the bootable diagnostic medium using a disc, do the following:
  1. Turn on the computer. If the computer cannot be turned on, go to “Power system checkout” on page 33, and check the power sources. If an error code is displayed, go to “Symptom-to-FRU index” on page 43 for error code descriptions and troubleshooting hints.
  2. Insert the disc into the optical drive.
  3. Restart the computer.
  4. When the ThinkPad logo is displayed, repeatedly press and release the F12 key. When the Boot Menu window opens, release the F12 key.
  5. Use the arrow keys to select **ATAPI CDx** (x: 0, 1, ...) and then press Enter. The diagnostic program launches.
  6. Follow the instructions on the screen to use the diagnostic program.

Power system checkout

To verify if a battery pack or an ac power adapter is functional, do the following:
1. Turn off the computer.
2. Remove the battery pack.
3. Connect the ac power adapter.
4. Check that power is supplied when you turn on the computer.
5. Turn off the computer.
6. Disconnect the ac power adapter and install the charged battery pack.
7. Check that the battery pack supplies power when you turn on the computer.

If you suspect a power problem, see the appropriate one of the following power supply checkouts:
- “Checking the ac power adapter” on page 33
- “Checking operational charging” on page 33
- “Checking the battery pack” on page 34
- “Checking the coin-cell battery” on page 34

Checking the ac power adapter

If your computer fails only when the ac power adapter is used, use the following instructions.

- If the power problem occurs only when the dock is used, replace the dock.
- If the system-status indicator does not blink three times when an ac power source is connected, check the power cord of the ac power adapter for correct continuity and installation.
- If the computer does not charge during operation, go to “Checking operational charging” on page 33.

To check the ac power adapter, do the following:
1. Unplug the ac power adapter cable from the computer.
2. Measure the output voltage at the plug of the ac power adapter cable.

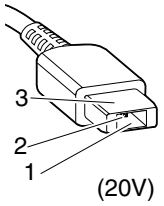

Pin	Voltage (V dc)
1	+20
2	0
3	Ground

   Note: Output voltage across pin 2 of the ac power adapter might differ from the one you are servicing.
3. If the voltage is not correct, replace the ac power adapter.
4. If the voltage is acceptable, replace the system board.

Note: Noise from the ac power adapter does not always indicate a defect.

Checking operational charging

To check whether the battery pack charges correctly during operation, do the following:

1. Discharge the battery pack until the remaining battery power is less than 50%.
2. Connect the computer to ac power to charge the battery pack. If the battery status icon in the Windows notification area indicates that the batteries are not charging, remove the battery pack and let them return to room temperature.
3. Reinstall the battery pack. If the batteries are still not charging, replace the battery pack.

4. Check the battery status icon again. If the same error still exists, replace the system board. Otherwise, check the original battery pack. See “Checking the battery pack” on page 34.

Checking the battery pack

This system supports only batteries specially designed for this specific system and manufactured by Lenovo or an authorized builder. The system does not support unauthorized batteries or batteries designed for other systems. If an unauthorized battery pack or a battery pack designed for another systems is installed, the system will not charge.

Attention: Lenovo has no responsibility for the performance or safety of unauthorized batteries, and provides no warranties for failures or damage arising out of their use.

The battery status icon in the Windows notification area displays the percentage of battery power remaining.

To check for detailed battery status information, do the following:

- For Windows 7: Open the Power Manager program and click the **Battery** tab.
- For Windows 8.1: Open the Lenovo Settings program and click **Power**.

Note: If the battery pack becomes hot, it may not be able to charge. Remove it from the computer and leave it at room temperature for a while. After it cools down, reinstall and recharge it.

To check the battery pack, do the following:

1. Power off the computer.
2. Remove the battery pack and measure the voltage between battery terminals 1 (+) and 7 (-). See the following figure:

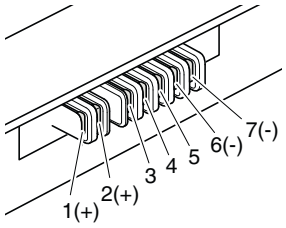

Terminal	Voltage (V dc)
1, 2	+ 0 to + 12.6
6, 7	Ground (-)

3. If the voltage is less than +11.0 V dc, the battery pack has been discharged.

   If the voltage is still less than +11.0 V dc after recharging, replace the battery pack.
4. If the voltage is more than +11.0 V dc, measure the resistance between battery terminals 5 and 7. The resistance must be 4 to 30 K Ω. If the resistance is not correct, replace the battery pack. If the resistance is correct, replace the system board.

Checking the coin-cell battery

Do the following:

1. Power off the computer, and unplug the ac power adapter from it.
2. Turn the computer upside down.
3. Remove the battery pack (see “1020 Battery pack” on page 66).
4. Remove the coin-cell battery (see “1090 Coin-cell battery” on page 73).
5. Measure the voltage of the battery. See the following figure.

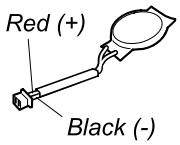

Wire	Voltage (V dc)
Red	+2.5 to +3.2
Black	Ground

- If the voltage is correct, replace the system board.
- If the voltage is not correct, replace the coin-cell battery.
- If the coin-cell battery discharges quickly after replacement, replace the system board.

Chapter 4. Related service information

This chapter presents following information:

- “Restoring the factory contents by using the Recovery Disc Set” on page 37
- “Recovery overview for the Windows 8.1 operating system” on page 38
- “Passwords” on page 40
- “Power management” on page 42
- “Symptom-to-FRU index” on page 43

Service Web site:
When the latest maintenance diskette and the system program service diskette become available, they will be posted on:
http://www.lenovo.com/support

Restoring the factory contents by using the Recovery Disc Set

When the main storage drive is replaced because of a failure, no product recovery program is on the new drive. In this case, the customer must use the Recovery Disc Set to recover the computer. Order the Recovery Disc Set and the drive at the same time so that the customer can restore the computer to the factory default settings by using the Recovery Disc Set after the new drive is installed. For information about which discs to order, go to:
http://www.lenovo.com/serviceparts-lookup

Depending on the model, the number of recovery discs included in the Recovery Disc Set differs. To restore the factory contents by using the product Recovery Disc Set, do the following:

Notes:

- During the recovery process, all data on the drive will be deleted. If possible, copy any important data or personal files that you want to keep onto removable media or a network drive before you start the recovery process..
- The recovery process takes one to two hours to complete. The length of time depends on the method you use. If you use product Recovery Disc Set, the recovery process takes about two hours.

1. Connect an external CD/DVD drive.
2. Make the CD/DVD drive the first startup device in the startup sequence using the following procedure:
   a. Open the ThinkPad Setup program and select **Startup → Boot**.
   b. Select the CD/DVD drive as the **1st Boot Device**.
3. Insert the bootable recovery disc into the CD/DVD drive.
4. Start the computer from the external CD/DVD drive.
5. When promoted, select your language and click **Next**.
6. Read the license and accept the terms and conditions. Then follow the instructions on the screen.
7. If the Recovery Disc Set contains a *Supplemental Recovery Disc*, insert it when prompted and click **Yes**.

   Note: Not all Recovery Disc Sets come with a Supplemental Recovery Disc. If there is a Supplemental Recovery Disc, it will be clearly marked as such.
8. When all of the data has been copied from the last disc in the set and has been processed, remove the external CD/DVD drive and restart the computer. Follow the instructions on the screen to finish the recovery.

© Copyright Lenovo 2014, 2015

Note: The rest of the recovery process is fully automated and no action from you is required. The computer will restart into the Microsoft Windows desktop several times and you might experience periods when no activity is apparent on the screen for several minutes at a time. This is normal.

9. When the recovery process completes, the Welcome to Microsoft Windows screen is displayed. Follow the instructions on the screen to complete the Windows setup.
10. After you have completed the Windows setup, you might want to restore the original startup sequence. Start the ThinkPad Setup program and then press F9 to restore the default settings. Press F10 to save changes and exit the ThinkPad Setup program.

Note: After restoring a drive to the factory default settings, you might need to reinstall some device drivers.

Recovery overview for the Windows 8.1 operating system

This section provides information about the recovery solutions for the Windows 8.1 operating system.

A Windows recovery image is preinstalled in the recovery partition on your computer. The Windows recovery image enables you to refresh your computer, or reset your computer to the factory default settings.

You can create recovery media as backups or replacement for the Windows recovery image. With the recovery media, you can troubleshoot and fix the problems on your computer even if you cannot start the Windows 8.1 operating system. It is recommended that you create recovery media as early as possible. For more information, see “Creating and using recovery media” on page 39.

Refreshing your computer

If your computer does not perform well and the problem might be caused by a recently installed program, you can refresh your computer without losing your personal files or changing your settings.

Attention: If you refresh your computer, the programs that came with your computer and the programs that you installed from Windows Store will be reinstalled, but all other programs will be removed.

To refresh your computer, do the following:

1. Move your pointer to the top-right or bottom-right corner of the screen to display the charms. Click **Settings** → **Change PC settings** → **Update and recovery** → **Recovery**.
2. In the **Refresh your PC without affecting your files** section, click **Get started**.
3. Follow the instructions on the screen to refresh your computer.

Resetting your computer to the factory default settings

If you want to recycle your computer or just start over, you can reset your computer to the factory default settings. Resetting the computer will reinstall the operating system, reinstall all the programs that came with your computer, and reset all the settings to the factory default settings.

Attention: If you reset the computer to the factory default settings, all your personal files and settings will be deleted. To avoid data loss, make a backup copy of all the data that you want to keep.

To reset your computer to the factory default settings, do the following:

1. Move your pointer to the top-right or bottom-right corner of the screen to display the charms. Click **Settings** → **Change PC settings** → **General**.
2. In the **Remove everything and reinstall Windows** section, click **Get started**. Then click **Next** to confirm the operation.
3. Depending on your needs, do one of the following:

- To perform a quick format, click **Just remove my files** to start the process. The process will take several minutes.
- To perform a complete format, click **Fully clean the drive** to start the process. The process will take several hours.

4. Follow the instructions on the screen to reset your computer to the factory default settings.

Using the advanced startup options

With the advanced startup options, you can change the firmware settings of the computer, change the startup settings of the Windows operating system, start the computer from an external device, or restore the Windows operating system from a system image.

To use the advanced startup options, do the following:

1. Move your pointer to the top-right or bottom-right corner of the screen to display the charms. Click **Settings** → **Change PC settings** → **General**.
2. In the **Advanced startup** section, click **Restart now** → **Troubleshoot** → **Advanced options**.
3. Select a desired startup option, then follow the instructions on the screen.

Recovering your operating system if Windows 8.1 fails to start

The Windows recovery environment on your computer is capable of operating independently from the Windows 8.1 operating system. This enables you to recover or repair the operating system even if the Windows 8.1 operating system fails to start.

After two consecutive failed boot attempts, the Windows recovery environment starts automatically. Then you can choose repair and recovery options by following the instructions on the screen.

Note: Ensure that your computer is connected to ac power during the recovery process.

Creating and using recovery media

You can create recovery media as backups for the Windows recovery environment and the Windows recovery image. If you cannot start the computer, you can use recovery media to troubleshoot and fix the problems on your computer.

It is recommended that you create recovery media as early as possible. Once you create recovery media, keep them in a safe place and do not use them to store other data.

Creating recovery media

To create recovery media, you need a USB drive with at least 16 GB of storage. The required USB capacity depends on the size of the recovery image.

Attention: Creating recovery media will delete anything stored on the USB drive. To avoid data loss, make a backup copy of all the data that you want to keep.

To create recovery media, do the following:

Note: Ensure that your computer is connected to ac power.

1. Move your cursor to the top-right or bottom-right corner of the screen to display the charms, and click **Search**.
2. Type `recovery` in the **Search** field and click the Search button. Then click **Create a recovery drive**.
3. Click **Yes** in the User Account Control window to allow the Recovery Media Creator program to start.

4. Ensure that you select the **Copy the recovery partition from the PC to the recovery drive.** option. Then click **Next**.

   Important: If you clear the **Copy the recovery partition from the PC to the recovery drive.** option, you will create recovery media without the recovery partition content. You still can start the computer from the recovery media, but you might be unable to recover your computer if the recovery partition on your computer is damaged.
5. Connect a proper USB drive then click **Next**.
6. Click **Create** in the Recovery Drive window. The creation of the recovery media starts.
7. When the creation of the recovery media finishes, do one of the following:
   - To keep the recovery partition on your computer, click **Finish**.
   - To delete the recovery partition on your computer, click **Delete the recovery partition**.

     Attention: If you delete the recovery partition on your computer, do keep the recovery media in a safe place. The Windows recovery image will not be stored in your computer anymore, and you will need the recovery media to refresh or reset your computer.
8. Remove the USB drive. The recovery media are created successfully.

Using recovery media

If you cannot start your computer, or if you cannot start the Windows recovery image on your computer, use recovery media to recover your computer.

To use recovery media, do the following:

Note: Ensure that your computer is connected to ac power.

1. Turn on or restart the computer. Before the Windows operating system starts, repeatedly press the F12 key. The Boot Menu window opens.
2. Select the recovery drive as the boot device.
3. Select a preferred language and then select a preferred keyboard layout.
4. Click **Troubleshoot** to display the optional recovery solutions.
5. Select a corresponding recovery solution according to your situation. For example, select **Reset your PC** if you want to reset your computer to the factory default settings.

For more information about the recovery solutions provided by the Windows 8.1 operating system, go to: http://go.microsoft.com/fwlink/?LinkID=263800

Passwords

As many as three passwords might be needed for a ThinkPad notebook computer: the power-on password, the hard disk password, and the supervisor password.

If any of these passwords has been set, a prompt for it will be displayed on the screen whenever the computer is turned on. The computer does not start until the password is entered.

Note: If only a supervisor password is set, the password prompt will not be displayed when the operating system is started.

Power-on password

A power-on password protects the system from being turned on by an unauthorized person. The password must be entered before the operating system can be started. For instructions on how to remove the power-on password, see “How to remove the power-on password” on page 41.

Hard disk password

There are two hard disk passwords:

- User hard disk password - for the user
- Master hard disk password - for the system administrator, who can use it to get access to the hard disk even if the user has changed the user hard disk password.

Note: There are two modes for the hard disk password: **User only** and **Master + User**. The **Master + User** mode requires two hard disk passwords; the system administrator enters both in the same operation. The system administrator then provides the user hard disk password to the system user.

Attention: If the user hard disk password has been forgotten, check whether a master hard disk password has been set. If a master hard disk password has been set, it can be used to access the hard disk drive. If no master hard disk password is available, neither Lenovo nor Lenovo authorized service technicians provide any services to reset either the user hard disk password or the master hard disk password, or to recover data from the hard disk drive. The hard disk drive can be replaced for a scheduled fee.

For instructions on how to remove the hard disk password, see “How to remove the hard disk password” on page 42.

Supervisor password

A supervisor password protects the system information stored in the ThinkPad Setup program. The user must enter the supervisor password in order to get access to the ThinkPad Setup program and change the system configuration.

Attention: If the supervisor password has been forgotten and cannot be made available to the service technician, there is no service procedure to reset the password. The system board must be replaced for a scheduled fee.

How to remove the power-on password

To remove the power-on password, do one of the following:

If no supervisor password has been set, do the following to remove the power-on password:

1. Turn off the computer.
2. Remove the battery pack. For instructions on how to remove the battery pack, see “1020 Battery pack” on page 66.
3. Remove the coin-cell battery. For instructions on how to remove the coin-cell battery, see “1090 Coin-cell battery” on page 73.
4. Turn on the computer and wait until the POST ends. After the POST ends, the password prompt will not be displayed. The power-on password has been removed.
5. Reinstall the coin-cell battery and the battery pack.

If a supervisor password has been set and is known to the service technician, do the following to remove the power-on password:

1. Turn on the computer.
2. When the ThinkPad logo is displayed, immediately press F1.

3. Type the supervisor password to enter the ThinkPad Setup program.
4. Select **Security**.
5. Select **Password**.
6. Select **Power-On Password**.
7. Type the current supervisor password in the **Enter Current Password** field. Then, leave the **Enter New Password** field blank, and press Enter twice.
8. In the Changes have been saved window, press Enter.
9. Press Fn+F10 to save changes and exit the ThinkPad Setup program.

How to remove the hard disk password

Attention: If **User only** mode is selected and the user hard disk password has been forgotten and cannot be made available to the service technician, neither Lenovo nor Lenovo authorized service technicians provide any services to reset the user hard disk password, or to recover data from the hard disk drive. The hard disk drive can be replaced for a scheduled fee. To put the system back to operational status, the only Lenovo and Lenovo-authorized service solution would be to replace the hard disk drive or solid-state drive with a scheduled fee.

To remove a user hard disk password that has been forgotten, when the supervisor password and the master hard disk password are known, do the following:

1. Turn on the computer.
2. When the ThinkPad logo is displayed, immediately press F1 to enter the ThinkPad Setup program.
3. Select **Security**.
4. Select **Password**.
5. Select **Hard-disk *x* password** where *x* is the letter of the hard disk drive. A pop-up window opens.
6. Select **Master HDP**, where HDP stands for hard disk password.
7. Type the current master hard disk password in the **Enter Current Password** field. Then, leave the **Enter New Password** field blank, and press Enter twice.
8. Press Fn+F10 to save changes and exit the ThinkPad Setup program. The user hard disk password and the master hard disk password have been removed.

Power management

To reduce power consumption, the computer has three power management modes: screen blank, sleep, and hibernation.

Screen blank mode (for the Windows 7 operating system only)

If the time set on the “Turn off monitor” timer in the operating system expires, the LCD backlight turns off.

To put the computer into screen blank mode, do the following:

1. Right-click the battery gauge in the task bar.
2. Select **Power off display (keep current power plan)**.

To end screen blank mode and resume normal operation, press any key.

Sleep mode

When the computer enters sleep mode, the following events occur in addition to what occurs in screen blank mode:

- The LCD is powered off.

- The hard disk drive or solid-state drive is powered off.
- The microprocessor stops.

To enter sleep mode, do one of the following:

- For Windows 7: Click the arrow beside the **Shut down** icon, and then select **Sleep**. To return from sleep mode, press any key.
- For Windows 8.1: Move the pointer to the top-right or bottom-right corner of the screen to bring up the charms. Then click **Settings → Power → Sleep**.

In certain circumstances, the computer goes into sleep mode automatically:

- After a period of inactivity specified in power plan settings
- When the battery power is low

To cause the computer to return from sleep mode and resume operation, do one of the following:
- Press any key.
- Open the LCD cover.
- Turn on the power button.

Also, in either of the following events, the computer automatically returns from sleep mode and resumes operation:

- The ring indicator (RI) is signaled by a serial device or a PC Card device.
- The time set on the resume timer elapses.

  Note: The computer does not accept any input immediately after it enters sleep mode. Wait a few seconds before taking any action to reenter operation mode.

Hibernation mode

In hibernation mode, the following occurs:

- The system status, RAM, VRAM, and setup data are stored on the hard disk drive or solid-state drive.
- The system is powered off.

Note: If the computer enters the hibernation mode while it is connected to the dock, do not disconnect it before resuming normal operation. If you do disconnect it and then try to resume normal operation, you will get an error message, and you will have to restart the system.

If you have defined one of the following actions as the event that causes the system to go into hibernation mode, perform that action.
- Closing the lid.
- Pressing the power button.

Also, the computer goes into hibernation mode automatically after a period of inactivity specified in power plan settings

When the power is turned on, the computer returns from hibernation mode and resumes operation. The hibernation file in the boot record on the hard disk drive or solid-state drive is read, and system status is restored from the hard disk drive or solid-state drive.

Symptom-to-FRU index

This section contains following information:
- “Numeric error codes” on page 44

- “Error messages” on page 46
- “No-beep symptoms” on page 46
- “LCD-related symptoms” on page 47
- “Intermittent problems” on page 47
- “Undetermined problems” on page 47

The symptom-to-FRU index in this section lists symptoms and errors and their possible causes. The most likely cause is listed first, in boldface type.

Note: Do the FRU replacement or other actions in the sequence shown in the column headed “FRU or action, in sequence.” If replacing a FRU does not solve the problem, put the original part back in the computer. Do not replace a nondefective FRU.

This index can also help you determine, during regular servicing, what FRUs are likely to need to be replaced next.

A numeric error is displayed for each error detected in POST or system operation. In the displays, **n** can be any number.

If no numeric code is displayed, check the narrative descriptions of symptoms. If the symptom is not described there, go to “Intermittent problems” on page 47.

Note: For a device not supported by diagnostic codes in the ThinkPad notebooks, see the manual for that device.

Numeric error codes

Table 2. Numeric error codes

Symptom or error (beeps, if any)	FRU or action, in sequence
0177 Bad SVP data, stop POST task—The checksum of the supervisor password in the EEPROM is not correct.	**Replace the system board.**
0183 Bad CRC of Security Settings in EFI Variable. Enter the ThinkPad Setup program. – The checksum of the Security settings in the EFI Variable is not correct.	1. **Run the ThinkPad Setup program. The settings will be corrected automatically. Then save the current settings by pressing Fn+F10.** 2. Replace the system board.
0187 EAIA data access error - The access to EEPROM is failed.	**Replace the system board.**
0188 Invalid RFID Serialization Information Area.	**Replace the system board.**
0189 Invalid RFID configuration information area - The EEPROM checksum is not correct.	**Replace the system board.**
0190 Critical low-battery error	1. **Charge the battery pack.** 2. Replace the battery pack.
0191 System Security - Invalid Remote Change requested.	1. **Run the ThinkPad Setup program, and then save current setting by pressing Fn+F10.** 2. Replace the system board.

Table 2. Numeric error codes (continued)

Symptom or error (beeps, if any)	FRU or action, in sequence
0199 System Security - Security password retry count exceeded.	1. **Run the ThinkPad Setup program. The retry count will be reset. Then save the current settings by pressing Fn+F10.** 2. Replace the system board.
0251 System CMOS checksum bad - Default configuration used.	1. **Charge the coin-cell battery for more than 8 hours by connecting the ac power adapter.** 2. Replace the coin-cell battery and run the ThinkPad Setup program to reset the time and date.
0253 EFI Variable Block Data was destroyed.	1. **Run ThinkPad Setup to reconfigure the settings.** 2. Replace the system board.
0271 Real-Time Clock Error. Check Date and Time settings.	1. **Run ThinkPad Setup to reset the time and date** 2. Replace the coin-cell battery and run the ThinkPad Setup program to reset the time and date.
1802 Unauthorized network card is plugged in - Turn off and remove the network card.	1. **Remove the network card.** 2. Replace the system board.
1820 More than one external fingerprint reader is attached. Power off and remove all but the reader that you set up within your main operating system.	**Remove all but the reader that you set up for the authentication**
2000 ThinkVantage Active Protection sensor diagnostics failed.	**Have the computer serviced.**
2100 Detection error on HDD0 (Main HDD)	1. **Reseat the hard disk drive.** 2. Replace the main hard disk drive. 3. Replace the system board.
2101 Detection error on HDD1 (Ultrabay HDD)	1. **Reseat the hard disk drive.** 2. Replace the Ultrabay® hard disk drive. 3. Replace the system board.
2102 Detection error on HDD2 (Mini SATA)	1. **Reseat the Mini SATA device.** 2. Replace the mini SATA device. 3. Replace the system board.
2110 Read error on HDD0 (Main HDD)	1. **Reseat the hard disk drive.** 2. Replace the main hard disk drive. 3. Replace the system board.
2111 Read error on HDD1 (Ultrabay HDD)	1. **Reseat the hard disk drive.** 2. Replace the Ultrabay hard disk drive. 3. Replace the system board.
2112 Read error on HDD2 (Mini SATA)	1. **Reseat the Mini SATA device.** 2. Replace the mini SATA device. 3. Replace the system board.
2200 Machine Type and Serial Number are invalid.	**Replace the system board.**
2201 Machine UUID is invalid	**Replace the system board.**

Error messages

Table 3. Error messages

Symptom or error (beeps, if any)	FRU or action, in sequence
Fan error. (four short beeps, one long beep)	1. **Replace the fan**. 2. Apply thermal grease. 3. Replace the system board.
Thermal sensing error.	**Replace the system board.**
The battery installed is not supported by this system and will not charge. Please replace the battery with the correct Lenovo battery for this system. Press the ESC key to continue.	**Replace the battery.**
This system does not support batteries that are not genuine Lenovo-made or authorized. The system will continue to boot, but may not charge unauthorized batteries. **Attention:** Lenovo has no responsibility for the performance or safety of unauthorized batteries, and provides no warranties for failures or damage arising out of their use.	**Replace the battery.**

Beep symptoms

Table 4. Beep symptoms

Symptom or error	FRU or action, in sequence
One short beep, pause, three short beeps, pause, three more short beeps, pause, and one short beep	1. **Replace the memory module.** 2. Replace the system board.
One long and two short beeps	**Replace the system board.**
Five short beeps	**Replace the system board.**

No-beep symptoms

Table 5. No-beep symptoms

Symptom or error	FRU or action, in sequence
No beep, power-on indicator on, LCD blank, and no POST.	1. **Ensure that every connector is connected tightly and correctly**. 2. Reseat memory module. 3. Replace the system board.
No beep, power-on indicator on, and LCD blank during POST.	1. **Reseat memory module.**. 2. Replace the system board.
The power-on password prompt appears.	A power-on password or a supervisor password is set. Type the password and press Enter.
The hard-disk password prompt appears.	A hard-disk password is set. Type the password and press Enter.

LCD-related symptoms

Important: The TFT LCD for the notebook computer contains many thin-film transistors (TFTs). The presence of a small number of dots that are missing, discolored, or always lighted is characteristic of TFT LCD technology, but excessive pixel problems can cause viewing concerns.

If the LCD you are servicing has two or less visible defective pixels, it should not be considered faulty. However, if the LCD has three or more visible defective pixels, it will be deemed as defective by Lenovo and it should be replaced.

Notes:
- This policy applies to all ThinkPad Notebooks purchased on 1 January, 2008 or later.
- Lenovo will not provide warranty replacement if the LCD is within specifications because we cannot guarantee that any replacement LCD will have zero pixel defects.
- One pixel consists of R, G, B sub-pixels.

Table 6. LCD-related symptoms

Symptom or error	FRU or action, in sequence
No beep, power-on indicator on, and a blank LCD during POST.	**Replace the system board**.
• LCD backlight not working. • LCD too dark. • LCD brightness cannot be adjusted. • LCD contrast cannot be adjusted.	1. **Reseat the LCD connectors**. 2. Replace the LCD assembly. 3. Replace the system board.
• LCD screen unreadable. • Characters missing pixels. • Screen abnormal. • Wrong color displayed.	1. **See important note for "LCD-related symptoms."** 2. Reseat all LCD connectors. 3. Replace the LCD assembly. 4. Replace the system board.
Horizontal or vertical lines displayed on LCD.	**Replace the LCD assembly**.

Intermittent problems

Intermittent system hang problems can be due to a variety of causes that have nothing to do with a hardware defect, such as cosmic radiation, ESD, or software errors. FRU replacement should be considered only when a problem recurs.

When analyzing an intermittent problem, do the following:

1. Run the diagnostic test for the system board in loop mode **at least 10 times**.
2. If no error is detected, do not replace any FRUs.
3. If any error is detected, replace the FRU shown by the FRU code. Rerun the test to verify that no more errors exist.

Undetermined problems

If the diagnostic tests did not identify the device that has failed, if wrong devices are installed, or if the system simply is not operating, follow these procedures to isolate the failing FRU (do not isolate FRUs that have no defects).

Verify that all attached devices are supported by the computer.

Verify that the power supply being used at the time of the failure is operating correctly. (See "Power system checkout" on page 33)

1. Turn off the computer.

2. Visually check each FRU for damage. Replace any damaged FRU.
3. Remove or disconnect all of the following devices:
   a. Non-ThinkPad devices
   b. Devices attached to the dock
   c. Printer, mouse, and other external devices
   d. Battery pack
   e. Hard disk drive or solid-state drive
   f. External diskette drive or optical drive
   g. Memory module
   h. Optical disk or diskette in the internal drive
4. Turn on the computer.
5. Determine whether the problem has been solved.
6. If the problem does not recur, reconnect the removed devices one at a time until you find the failing FRU.
7. If the problem remains, replace the following FRUs one at a time (do not replace a nondefective FRU):
   a. System board
   b. LCD assembly

Chapter 5. Status indicators

This chapter introduces the status indicators of the computer.

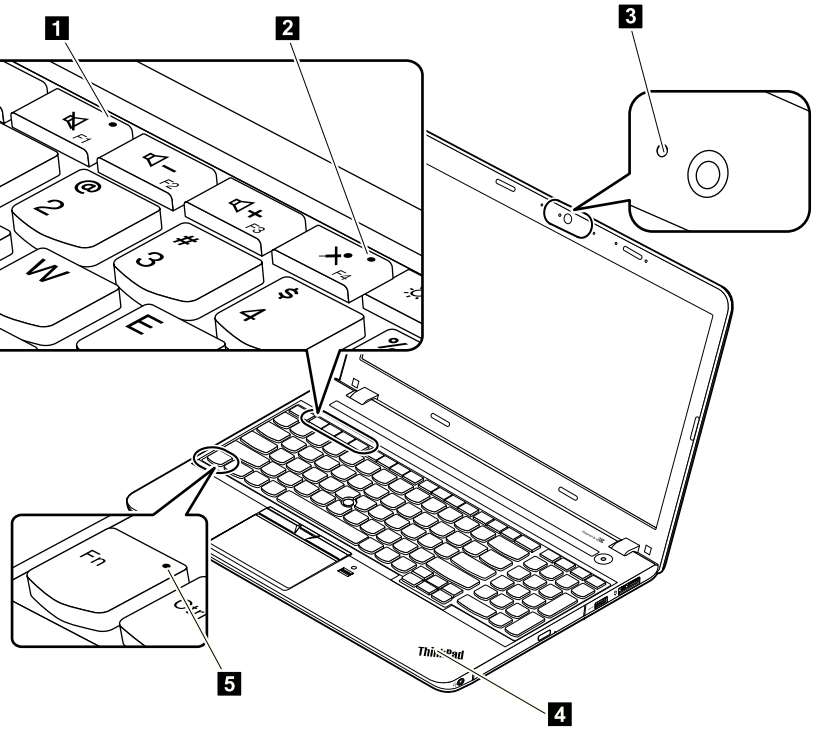

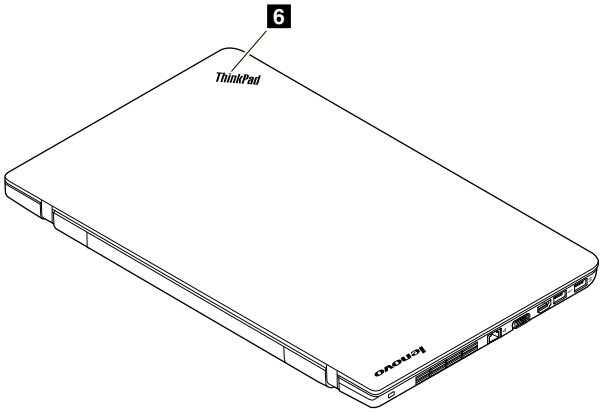

Table 7. Status indicators

Indicator	Description
1 Speaker-mute indicator	**On**: The speakers are muted.
2 Microphone-mute indicator	**On**: The microphones are muted.
3 Camera-status indicator	**On**: The camera is in use.

© Copyright Lenovo 2014, 2015

Table 7. Status indicators (continued)

Indicator	Description
4 and 6 System-status indicators	**Blinks for three times**: The computer is initially connected to power. **On**: The computer is on (in normal mode). **Off**: The computer is off or in hibernation mode. **Blinks slowly**: The computer is in sleep mode. **Blinks fast**: The computer is entering hibernation mode.
5 Fn Lock indicator	**On**: The Fn Lock function is enabled. To initiate the special function of each key, press the Fn key and the corresponding function key. To input F1-F12, press the function keys directly. **Off**: The Fn Lock function is disabled. To initiate the special function of each key, press the function keys directly. To input F1-F12, press the Fn key and the corresponding function key.

Chapter 6. Special keys

The following table describes the functions of function keys and key combinations.

Table 8. Special keys

Special key	Description
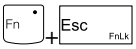	Enables or disables the Fn Lock function. **When the Fn Lock function is disabled**: The Fn Lock indicator is off. To initiate the special function of each key, press the function keys directly. To input F1-F12, press the Fn key and the corresponding function key. **When the Fn Lock function is enabled**: The Fn Lock indicator turns on. To initiate the special function of each key, press the Fn key and the corresponding function key. To input F1-F12, press the function keys directly.
	Mutes or unmutes the speakers. If you mute the sound and turn off your computer, the sound will remain muted when you turn on your computer again. To turn on the sound, press F1, F2, or F3.
	Decreases the speaker volume.
	Increases the speaker volume.
	Mutes or unmutes the microphones.
	Darkens the display.
	Brightens the display.
	Switches the display output location.
	Enables or disables the built-in wireless networking features.
	For Windows 8.1: Opens the **Settings** charm. For Windows 7: Opens **Control Panel**.
	For Windows 8.1: Opens the **Search** charm. For Windows 7: Opens **Windows Search**.
	Views the programs that you have opened.
	For Windows 8.1: Views all the programs. For Windows 7: Opens **Computer**.
	Launches the calculator.
	Locks the operating system.
	Opens the default browser.

© Copyright Lenovo 2014, 2015

Table 8. Special keys (continued)

Special key	Description
	Opens **Computer**.
Fn+B	Has the same function as the Break key on a conventional keyboard.
Fn+K	Has the same function as the ScrLK key on a conventional keyboard.
Fn+P	Has the same function as the Pause key on a conventional keyboard.
Fn+S	Has the same function as the SysRq key on a conventional keyboard.

Chapter 7. Locations

This chapter introduces the locations of the hardware components on your computer.

Locating computer controls, connectors, and indicators

This topic introduces the locations of the computer controls, connectors, and indicators.

Front view

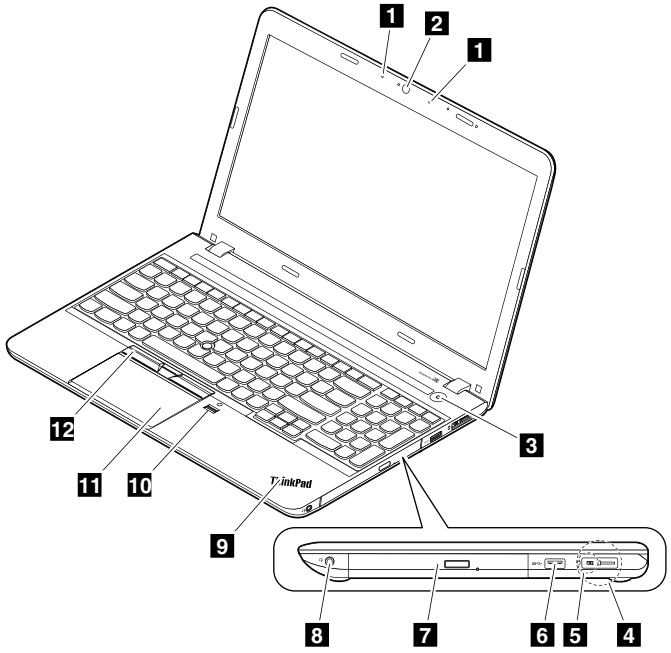

1 Microphones
2 Camera
3 Power button
4 Lenovo OneLink connector
5 ac power connector
6 USB 2.0 connector
7 Optical drive or optical-drive bay bezel
8 Audio connector
9 System-status indicator[1]
10 Fingerprint reader (available on some models)
11 Trackpad
12 TrackPoint® buttons (available on some models)

[1]: For the description of the system-status indicator, see Chapter 5 “Status indicators” on page 49.

© Copyright Lenovo 2014, 2015

Rear view

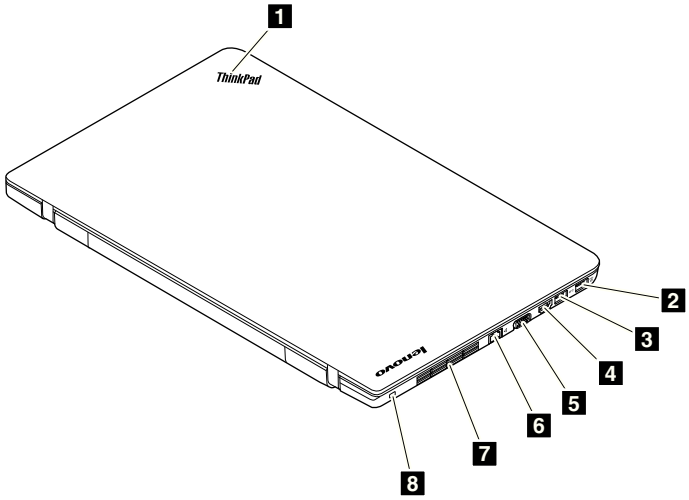

1 System-status indicator[1]
2 Always On USB 3.0 connector
3 USB 3.0 connector
4 High-Definition Multimedia Interface (HDMI™) connector
5 Video graphics array (VGA) connector
6 Ethernet connector
7 Fan louvers
8 Security-lock slot

[1]: For the description of the system-status indicator, see Chapter 5 “Status indicators” on page 49.

Bottom view

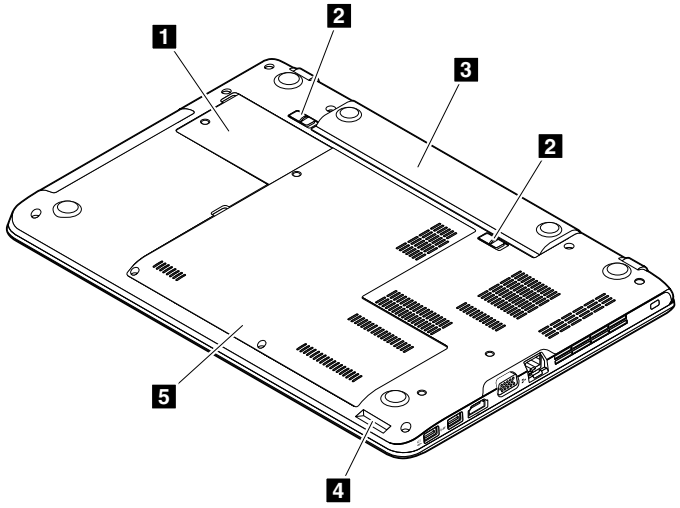

1 Small bottom cover
2 Battery latches
3 Battery pack
4 Media card slot
5 Large bottom cover

Locating FRUs and CRUs

This topic introduces the following service parts:
- “Major FRUs and CRUs” on page 56

- “LCD FRUs and CRUs” on page 58

Notes:
- Each FRU is available for all types or models, unless otherwise specified.
- **CRU statement for customers:**
  You can resolve some problems with your product with a replacement part you can install yourself, called a “Customer Replaceable Unit” or “CRU.” Some CRUs are designated as self-service CRUs and others are designated as optional-service CRUs. *Installation of self-service CRUs is your responsibility. For optional-service CRUs, you can either install the CRU yourself or you can request that a Service Provider install the CRU according to the warranty service for your product.* If you intend on installing the CRU, Lenovo will ship the CRU to you. CRU information and replacement instructions are shipped with your product and are available from Lenovo at any time upon request. You can find a list of CRUs for your product in this *Hardware Maintenance Manual*. An electronic version of this manual can be found at http://www.lenovo.com/support. Click **User Guides & Manuals** and then follow the on-screen instructions to find the manual for your product. You might be required to return the defective CRU. When return is required: (1) return instructions, a prepaid shipping label, and a container will be included with the replacement CRU; and (2) you might be charged for the replacement CRU if Lenovo does not receive the defective CRU within thirty (30) days of your receipt of the replacement CRU. See your Lenovo Limited Warranty documentation for full details.

  ThinkPad computers contain the following types of CRUs:
  - **Self-service CRUs:** These CRUs unplug or are held by no more than two screws. Examples of these types of CRUs include the ac power adapter, power cord, battery, and hard disk drive or solid-state drive. Other self-service CRUs depending on product design might include the memory module, wireless card, keyboard, palm rest, and ThinkPad trackpad.
  - **Optional-service CRUs:** These CRUs are isolated parts within the computer that are concealed by an access panel that is typically secured by more than two screws. Once the access panel is removed, the specific CRU is visible.

Major FRUs and CRUs

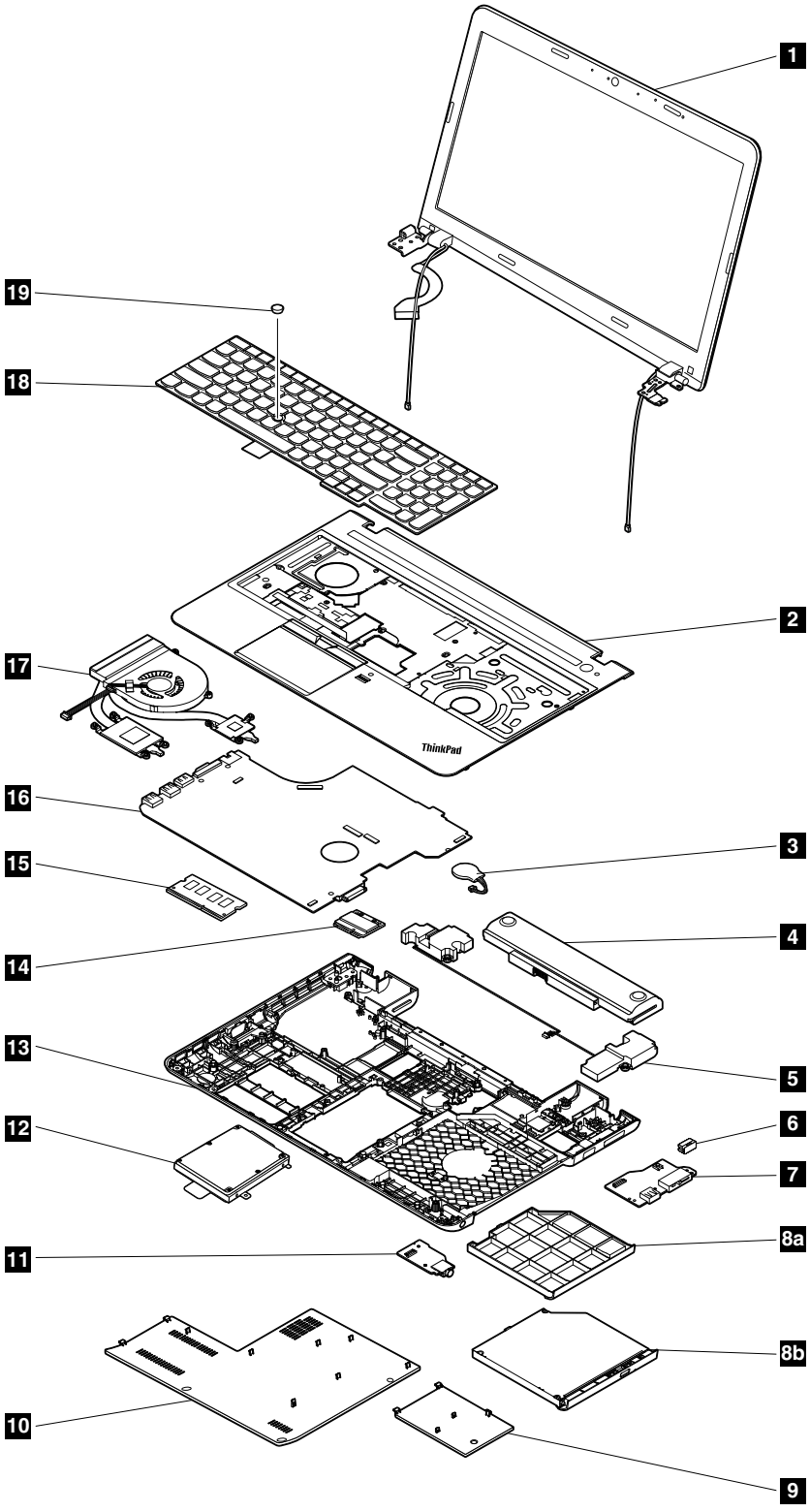

Table 9. Major FRUs and CRUs

No.	FRU description	Self-service CRU	Optional-service CRU
1	LCD unit	No	No
2	Keyboard bezel assembly	No	No
3	Coin-cell battery	Yes	No
4	Battery pack	Yes	No
5	Speaker assembly	No	No
6	Lenovo-OneLink-connector cover	Yes	No
7	dc-in/USB-connector board with cable	No	No
8a	Optical-drive bay bezel	Yes	No
8b	Optical drive	Yes	No
9	Small bottom cover	Yes	No
10	Large bottom cover	Yes	No
11	Audio connector card with cable	No	No
12	Hard disk drive assembly or solid-state drive assembly	No	Yes
13	Base cover assembly	No	No
14	Wireless LAN card	Yes	No
15	Memory module	Yes	No
16	System board	No	No
17	Thermal fan	No	No
18	Keyboard	Yes	No
19	TrackPoint cap	Yes	No

Note: Depending on the computer model, the keyboard bezel assembly 2 of your computer might look different from the illustration above.

LCD FRUs and CRUs

For models with a 2D camera

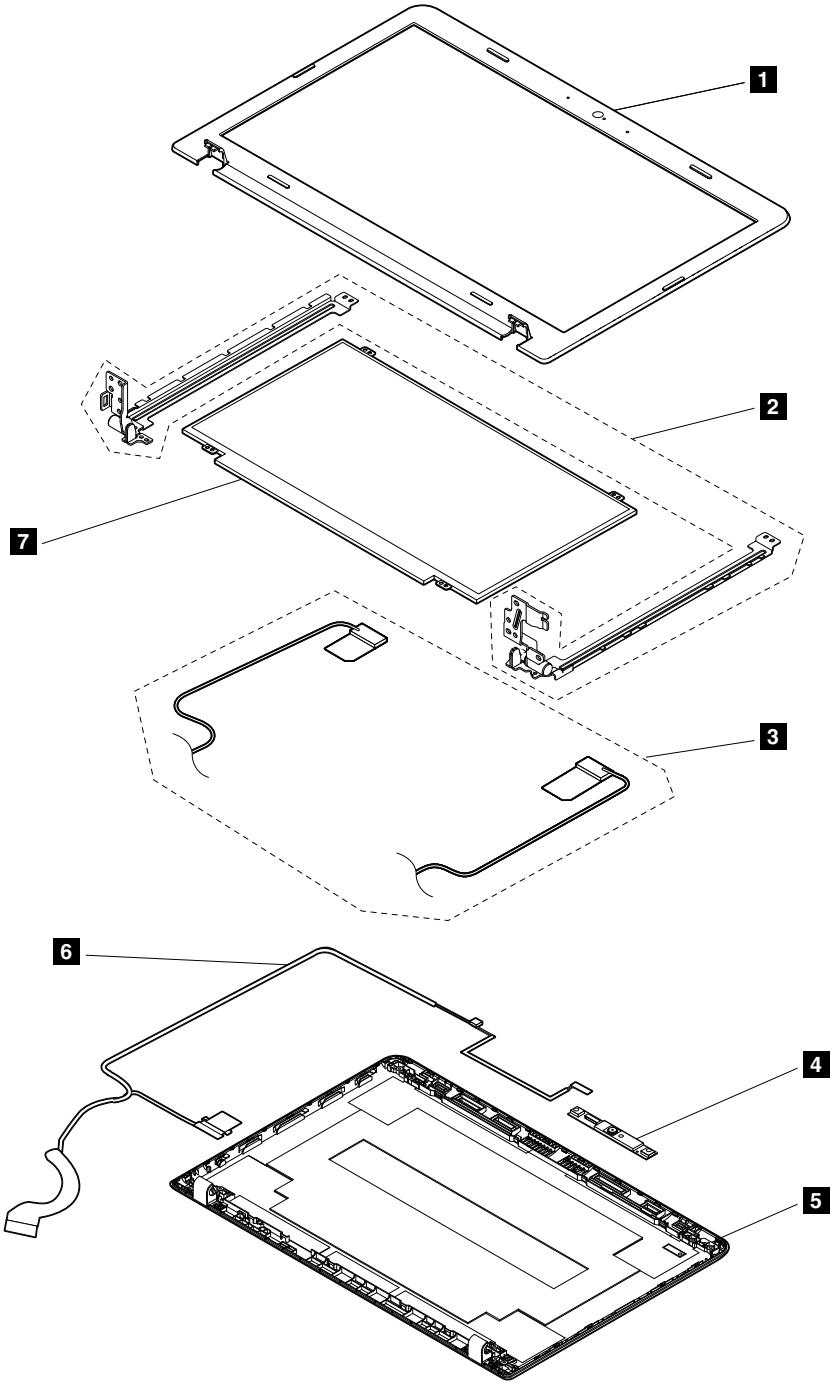

Table 10. LCD FRUs and CRUs for models with a 2D camera

No.	FRU description	Self-service CRU	Optional-service CRU
1	LCD bezel	No	No
2	LCD hinges	No	No
3	Wireless-LAN antenna assembly	No	No

Table 10. LCD FRUs and CRUs for models with a 2D camera (continued)

No.	FRU description	Self-service CRU	Optional-service CRU
4	Camera/microphone module	No	No
5	LCD cover kit	No	No
6	LCD cables	No	No
7	LCD panel	No	No

For models with a 3D camera

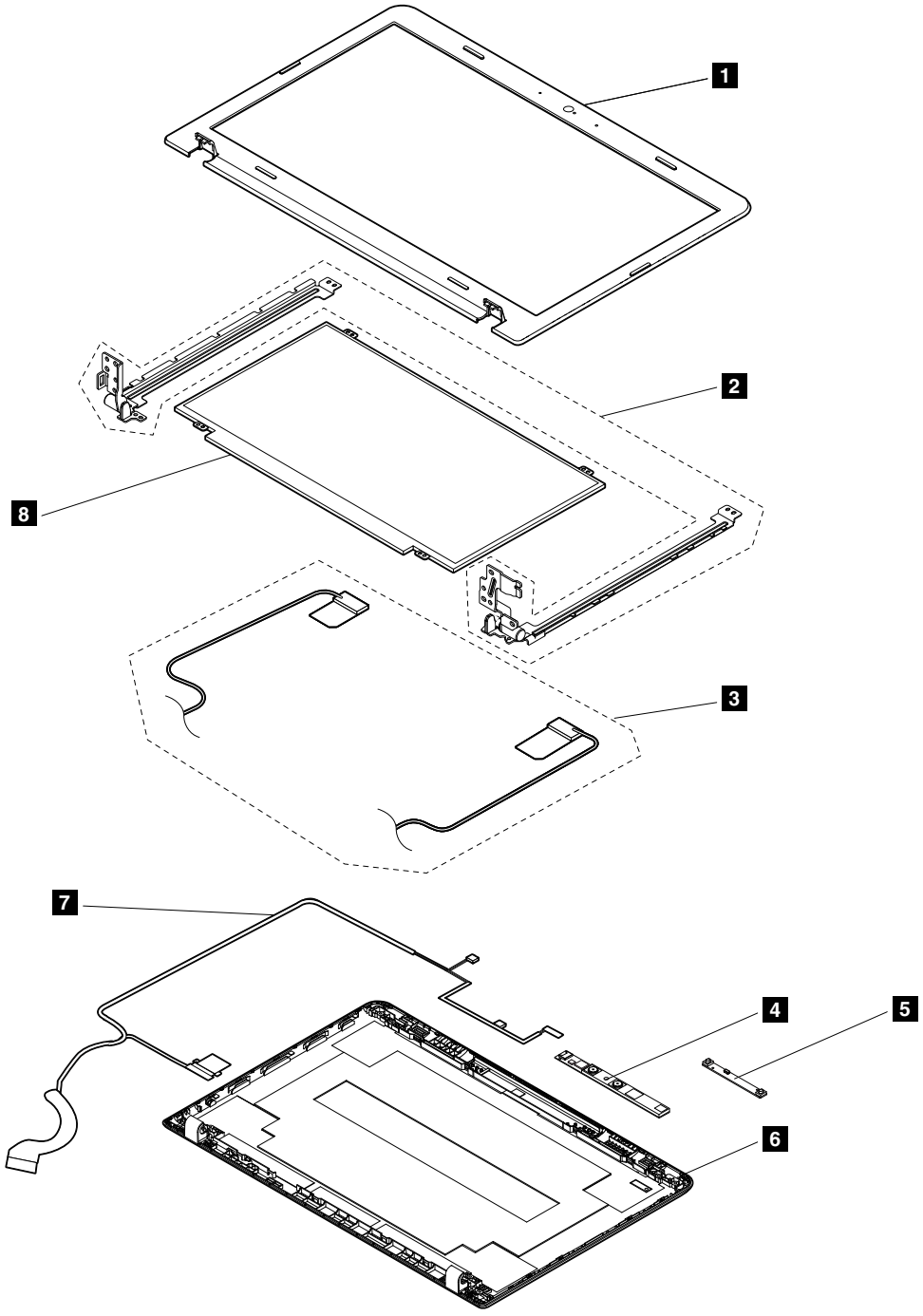

Table 11. LCD FRUs and CRUs for models with a 3D camera

No.	FRU description	Self-service CRU	Optional-service CRU
1	LCD bezel	No	No
2	LCD hinges	No	No
3	Wireless-LAN antenna assembly	No	No
4	Camera module	No	No
5	Microphone module	No	No
6	LCD cover kit	No	No
7	LCD cables	No	No
8	LCD panel	No	No

Miscellaneous kits and other FRUs

Table 12. Miscellaneous kits

FRU description	Self-service CRU	Optional-service CRU
Screw kit Screw kit for non-touch screen	No	No

Table 13. other FRUs

FRU description	Self-service CRU	Optional-service CRU
ac power adapter	Yes	No
Power cord	Yes	No

Looking up FRU information

For detailed FRU information, including part numbers, descriptions, and substitution part numbers, go to: http://www.lenovo.com/serviceparts-lookup

Chapter 8. FRU replacement notices

This chapter presents notices related to removing and replacing parts. Read this chapter carefully before replacing any FRU.

CRU statement for customers:
You can resolve some problems with your product with a replacement part you can install yourself, called a “Customer Replaceable Unit” or “CRU.” Some CRUs are designated as self-service CRUs and others are designated as optional-service CRUs. *Installation of self-service CRUs is your responsibility. For optional-service CRUs, you can either install the CRU yourself or you can request that a Service Provider install the CRU according to the warranty service for your product.* If you intend on installing the CRU, Lenovo will ship the CRU to you. CRU information and replacement instructions are shipped with your product and are available from Lenovo at any time upon request. You can find a list of CRUs for your product in this *Hardware Maintenance Manual*. An electronic version of this manual can be found at http://www.lenovo.com/support. Click **User Guides & Manuals** and then follow the on-screen instructions to find the manual for your product. You might be required to return the defective CRU. When return is required: (1) return instructions, a prepaid shipping label, and a container will be included with the replacement CRU; and (2) you might be charged for the replacement CRU if Lenovo does not receive the defective CRU within thirty (30) days of your receipt of the replacement CRU. See your Lenovo Limited Warranty documentation for full details.

This chapter presents notices related to removing and replacing parts. Read this chapter carefully before replacing any FRU.

Screw notices

Loose screws can cause a reliability problem. In the ThinkPad notebook computer, this problem is addressed with special nylon-coated screws that have the following characteristics:

- They maintain tight connections.
- They do not easily come loose, even with shock or vibration.
- They are harder to tighten.

Do the following when you service the computer:

- Keep the screw kit in your tool bag. For the part number of the screw kit, go to: http://www.lenovo.com/serviceparts-lookup
- It is recommended to use new screws.
- It is recommended to use each screw only once.

Tighten screws as follows:

- **Plastic to plastic**

  Turn an additional angle of 90 degrees after the screw head touches the surface of the plastic part.

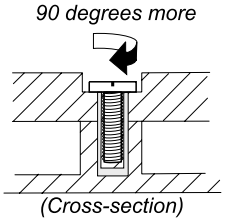

© Copyright Lenovo 2014, 2015

- **Logic card to plastic**

  Turn an additional angle of 180 degrees after the screw head touches the surface of the logic card.

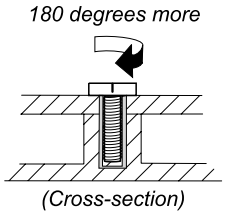

Notes:

- Ensure that you use the correct screw. It is recommended to use new screws for replacements. If you have a torque screwdriver, tighten all screws firmly to the torque specified in the screw information table for each step.
- Ensure torque screwdrivers are calibrated correctly following country specifications.

Retaining serial numbers

This topic provides instructions on the following:

- "Restoring the serial number of the system unit" on page 62
- "Retaining the UUID" on page 63

Restoring the serial number of the system unit

When the computer was manufactured, the EEPROM on the system board was loaded with the serial numbers of the system and all major components. These numbers need to remain the same throughout the life of the computer.

If you replace the system board, you must restore the serial number of the system unit to its original value.

The serial number of the system unit is written on the label attached to the bottom of the computer.

If you can not find the serial number of the system unit on the bottom of the computer, try the following method to get the number:

Note: Before you perform the operation, ensure that the UEFI/Legacy setting within the **Startup** menu in the ThinkPad Setup program is set to **UEFI Only**.

1. Connect a USB memory key to the computer.
2. Go to http://www.lenovo.com/maintenanceutilities and follow the instructions on the screen to create a Maintenance key.

   Note: Only an authorized Lenovo service technician can access the above Web site.
3. Restart the computer.
4. When the logo is displayed, press Esc. The ThinkPad Config Information Update Utility interface is displayed.
5. Type 1 under **Enter the action desired**, then press Enter. The ThinkPad Serial Number Update Utility for Asset ID screen is displayed.
6. Type 2 under **Enter the action desired**, then press Enter. The serial number of each device in your computer is displayed; the serial number of the system unit is listed as follow:
   20- Serial number
7. Record the serial number of the system unit.

After you replace the system board, do the following to restore the serial number of the system unit:

1. Connect the Maintenance key to the computer.
2. When the logo is displayed, press Esc. The ThinkPad Config Information Update Utility interface is displayed.
3. Type 1 under **Enter the action desired**, then press Enter. The ThinkPad Serial Number Update Utility for Asset ID screen is displayed.
4. Type 1 under **Enter the action desired**, then press Enter. Then follow the instructions on the screen to restore the serial number of the system unit.

Retaining the UUID

The Universally Unique Identifier (UUID) is a 128-bit number uniquely assigned to your computer at production and stored in the EEPROM of your system board.

The algorithm that generates the number is designed to provide unique IDs until the year A.D. 3400. No two computers in the world have the same number.

When you replace the system board, perform the following steps to create a new UUID for the system board if the system board does not have a UUID:

Note: Before you perform the operation, ensure that the UEFI/Legacy setting within the **Startup** menu in the ThinkPad Setup program is set to **UEFI Only**.

1. Connect a USB memory key to the computer.
2. Go to http://www.lenovo.com/maintenanceutilities and follow the instructions on the screen to create a Maintenance key.

   Note: Only an authorized Lenovo service technician can access the above Web site.
3. Restart the computer.
4. When the logo screen is displayed, press Esc. The ThinkPad Config Information Update Utility interface is displayed.
5. Type 2 under **Enter the action desired**, then press Enter. The Auto UUID generation utility interface is displayed.
6. Type y under **Change UUID. OK? [Y/N]**, then press Enter. A new UUID is created and written. If a valid UUID already exists, it is not overwritten.

Chapter 9. Removing or replacing a FRU

This chapter provides instructions on how to remove or replace a FRU.

CRU statement for customers:
You can resolve some problems with your product with a replacement part you can install yourself, called a “Customer Replaceable Unit” or “CRU.” Some CRUs are designated as self-service CRUs and others are designated as optional-service CRUs. *Installation of self-service CRUs is your responsibility. For optional-service CRUs, you can either install the CRU yourself or you can request that a Service Provider install the CRU according to the warranty service for your product.* If you intend on installing the CRU, Lenovo will ship the CRU to you. CRU information and replacement instructions are shipped with your product and are available from Lenovo at any time upon request. You can find a list of CRUs for your product in this *Hardware Maintenance Manual*. An electronic version of this manual can be found at http://www.lenovo.com/support. Click **User Guides & Manuals** and then follow the on-screen instructions to find the manual for your product. You might be required to return the defective CRU. When return is required: (1) return instructions, a prepaid shipping label, and a container will be included with the replacement CRU; and (2) you might be charged for the replacement CRU if Lenovo does not receive the defective CRU within thirty (30) days of your receipt of the replacement CRU. See your Lenovo Limited Warranty documentation for full details.

General guidelines

When removing or replacing a FRU, be sure to observe the following general guidelines:

1. Do not try to service any computer unless you have been trained and certified. An untrained person runs the risk of damaging parts.
2. Before replacing any FRU, review Chapter 8 “FRU replacement notices” on page 61.
3. Begin by removing any FRUs that have to be removed before replacing the failing FRU. Any such FRUs are listed at the beginning of each FRU replacement procedure. Remove them in the order in which they are listed.
4. Follow the correct sequence in the steps for removing a FRU, as given in the drawings by the numbers in square callouts.
5. When turning a screw, turn it in the direction as given by the arrow in the drawing.
6. When removing a FRU, move it in the direction as given by the arrow in the drawing.
7. To put the new FRU in place, reverse the removal procedure and follow any notes that pertain to replacement. For information about connecting and arranging internal cables, see Chapter 7 “Locations” on page 53.
8. When replacing a FRU, use the correct screws as shown in the replacement procedure.

DANGER

Before removing any FRU, turn off the computer, unplug all power cords from electrical outlets, remove the battery pack, and then disconnect any interconnecting cables.

Attention:

- After replacing a FRU, do not turn on the computer until you have made sure that all screws, springs, and other small parts are in place and none are loose inside the computer. Verify this by shaking the computer gently and listening for rattling sounds. Metallic parts or metal flakes can cause electrical short circuits.
- The system board is sensitive to, and can be damaged by, ESD. Before touching it, establish personal grounding by touching a ground point with one hand or by using an ESD strap.

© Copyright Lenovo 2014, 2015

1010 Lenovo-OneLink-connector cover

Removal steps of the Lenovo-OneLink-connector cover

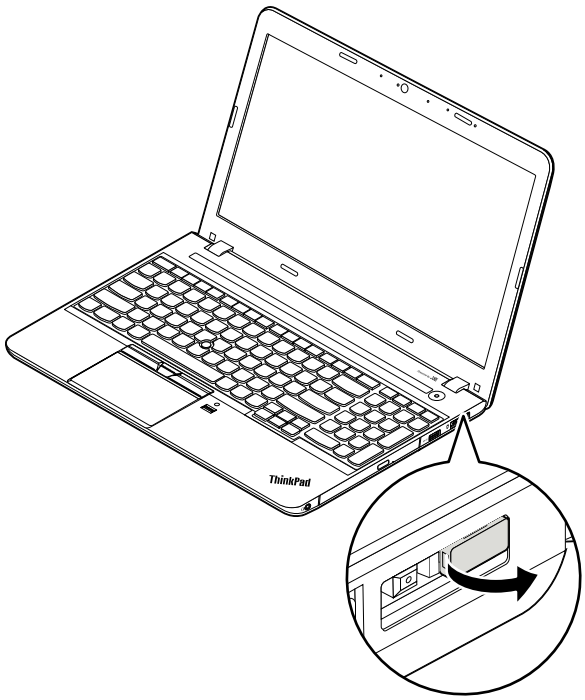

Notes:

- Depending on the model, your computer might look different from the illustration above.
- Ensure that you reattach the connector cover to the Lenovo OneLink connector after finishing the servicing.

1020 Battery pack

Important notice for replacing a battery pack
Attention: Lenovo has no responsibility for the performance or safety of unauthorized batteries, and provides no warranties for failures or damage arising out of their use.

The Lenovo Solution Center program provides an automatic battery diagnostic test that determines if the battery pack is defective. A battery pack FRU should not be replaced unless this diagnostic test shows that the battery is defective. The only exception to this is if the battery pack is physically damaged or a customer is reporting a possible safety issue.

If Lenovo Solution Center is not installed in the computer, the customer should download this program before a non-physically damaged battery pack is replaced. Note that a physically damaged battery pack is a non-warranty replacement part.

Removal steps of the battery pack

DANGER

Use only the authorized battery specified for your computer. Any other battery could ignite or explode.

Unlock the battery pack latch 1. Hold the battery pack lock lever in the unlocked position 2 and remove the battery pack 3.

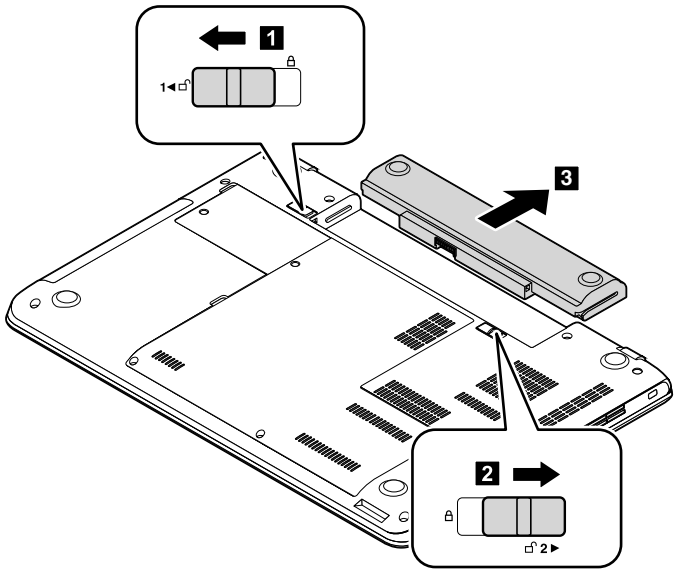

When installing: Install the battery pack into the slot. Ensure that the battery pack latch is in the locked position.

1030 Large bottom cover

For access, remove this FRU:
- "1020 Battery pack" on page 66

Removal steps of the large bottom cover

Loosen the screws 1 and then remove the large bottom cover 2.

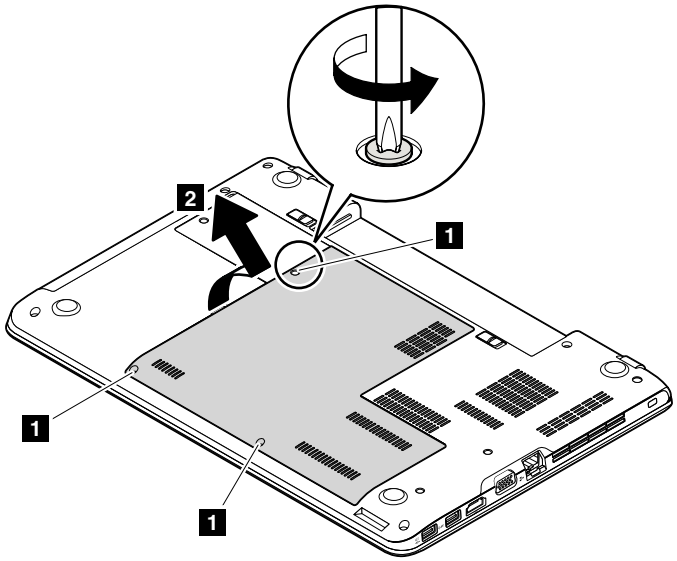

When installing: Attach the large bottom cover as shown in the following illustration.

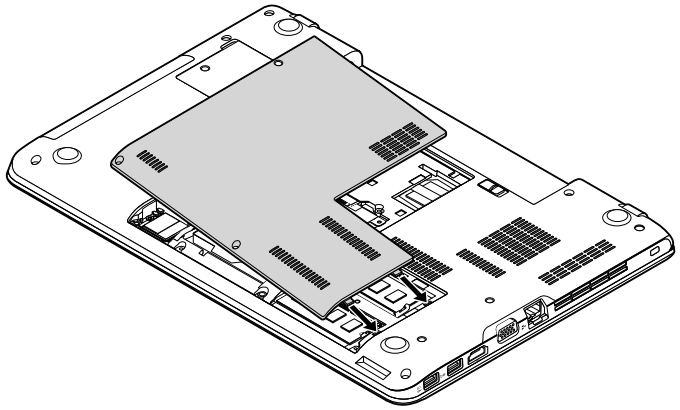

1040 Small bottom cover

For access, remove this FRU:

- “1020 Battery pack” on page 66

Removal steps of the small bottom cover

Loosen the screw **1** and then remove the small bottom cover **2**.

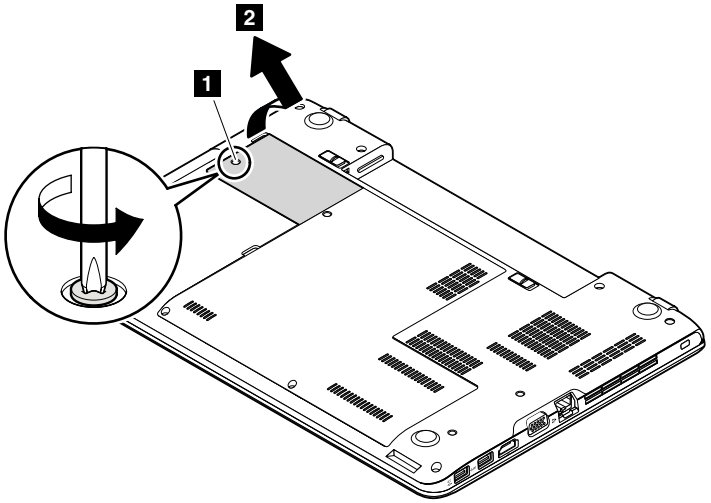

When installing: Attach the small bottom cover as shown in the following illustration.

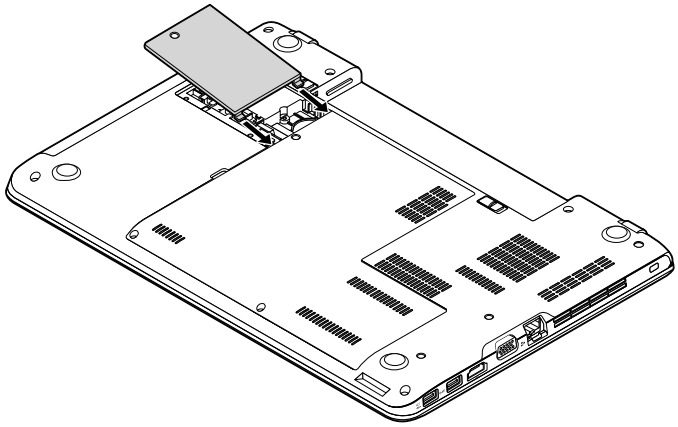

1050 Optical drive or optical-drive bay bezel

For access, remove these FRUs in order:
- “1020 Battery pack” on page 66
- “1030 Large bottom cover” on page 67

Removal steps of the optical drive or optical-drive bay bezel

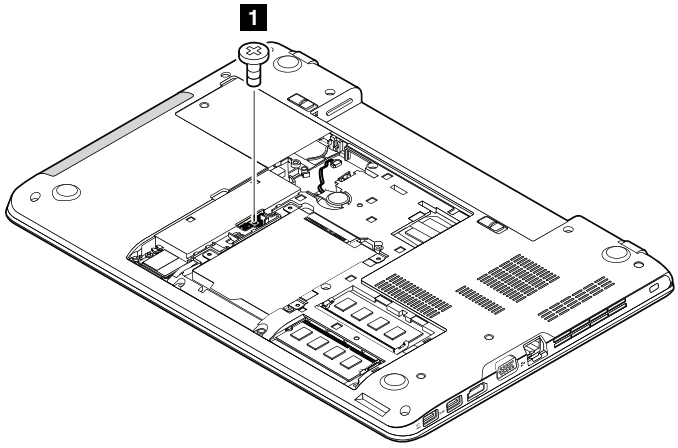

Step	Screw (quantity)	Color	Torque
1	M2 × 4 mm, wafer-head, nylon-coated (1)	Silver	0.181 Nm (1.85 kgf-cm)

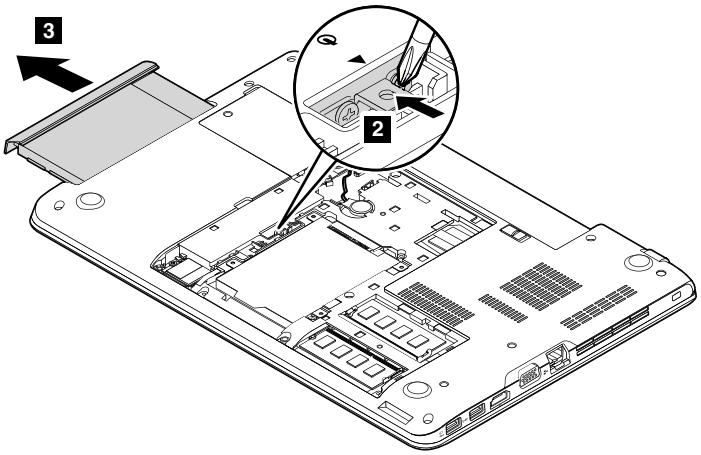

1060 Memory module

For access, remove these FRUs in order:
- “1020 Battery pack” on page 66
- “1030 Large bottom cover” on page 67

Removal steps of the memory module

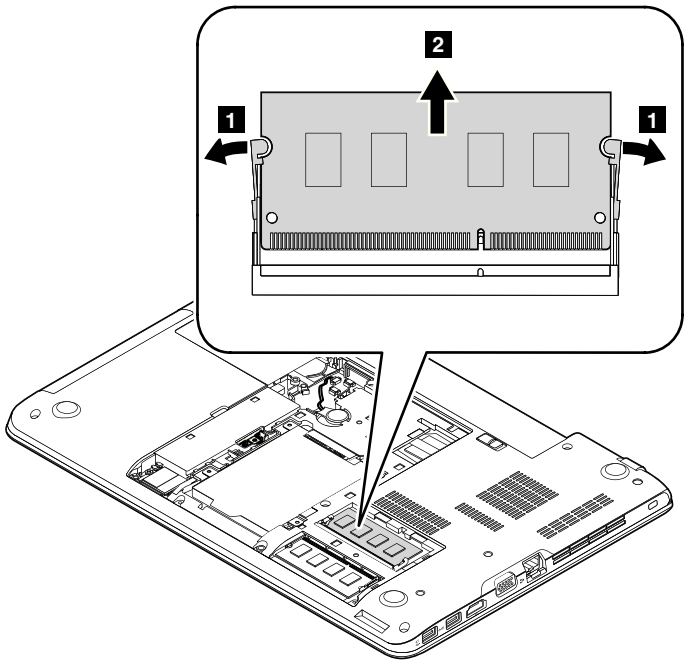

When installing:

Insert the notched end of the memory module into the slot at an angle of about 20 degrees. Press the memory module firmly, and pivot it downwards until it snaps into place. Ensure that the memory module is firmly installed in the slot and does not move easily.

1070 Hard disk drive assembly or solid-state drive assembly

For access, remove these FRUs in order:
- “1020 Battery pack” on page 66

- “1030 Large bottom cover” on page 67

Attention:

- Do not drop the drive or apply any physical shock to it. The drive is sensitive to physical shock. Improper handling can cause damage and permanent loss of data.
- Before removing the drive, have the user make a backup copy of all the information on it if possible.
- Never remove the drive while the computer is operating or is in suspend mode.

Removal steps of the hard disk drive assembly or solid-state drive assembly

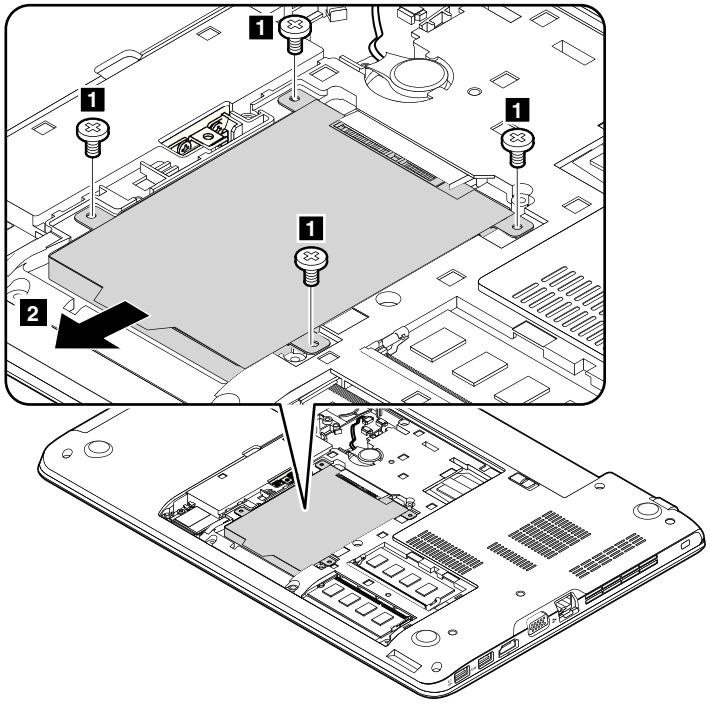

Step	Screw (quantity)	Color	Torque
1	M2 × 4 mm, wafer-head, nylon-coated (4)	Silver	0.181 Nm (1.85 kgf-cm)

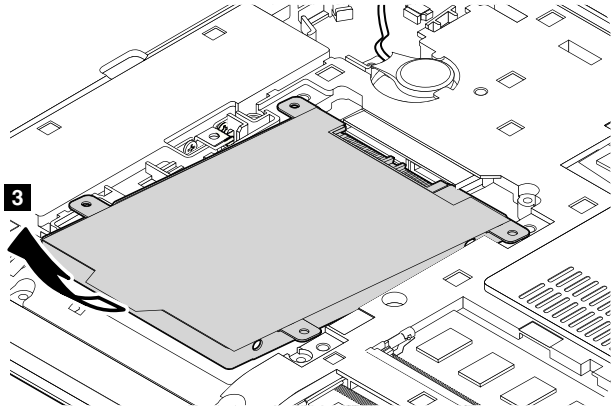

When installing: Ensure that the hard disk drive assembly or solid-state drive assembly is attached firmly.

1080 Wireless LAN card

For access, remove these FRUs in order:
- “1020 Battery pack” on page 66
- “1030 Large bottom cover” on page 67

Removal steps of the wireless LAN card

In step **1**, unplug the connectors by using the antenna RF connector removal tool or pick the connectors with your fingers and gently unplug them as shown.

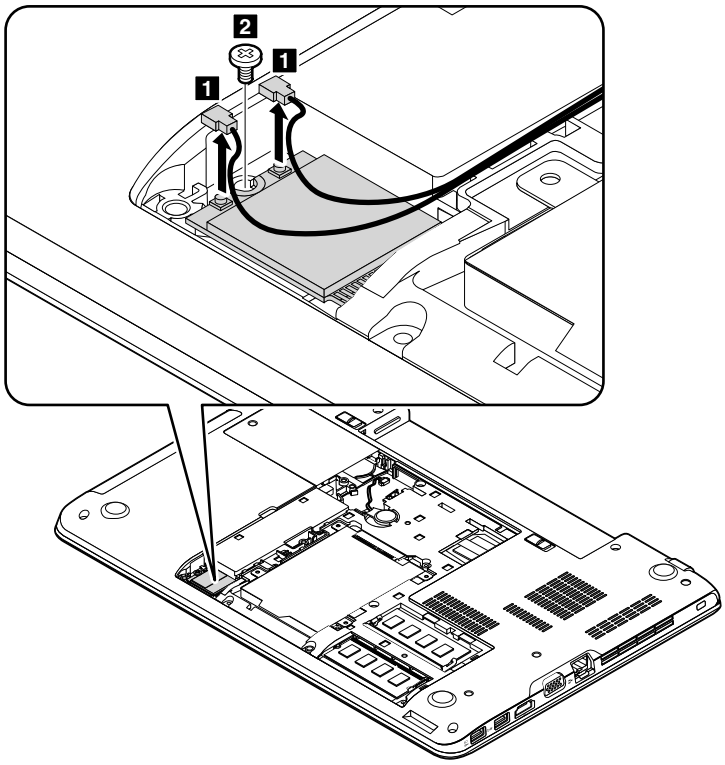

Step	Screw (quantity)	Color	Torque
2	M2 × 3 mm, wafer-head, nylon-coated (1)	Black	0.181 Nm (1.85 kgf-cm)

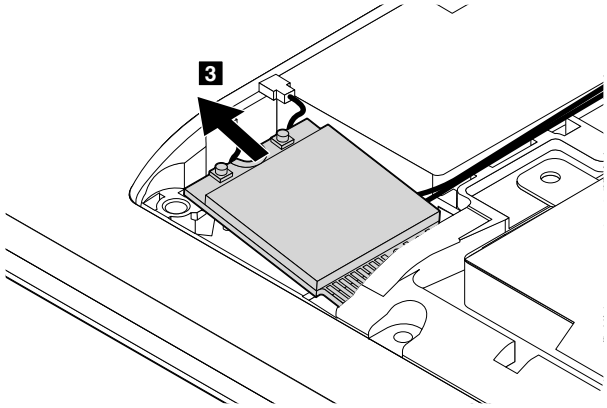

When installing: Plug the gray cable into the main connector, and the black cable into the auxiliary connector on the card.

1090 Coin-cell battery

For access, remove these FRUs in order:
- “1020 Battery pack” on page 66
- “1030 Large bottom cover” on page 67
- “1080 Wireless LAN card” on page 72

Removal steps of the coin-cell battery

DANGER

Use only the authorized battery specified for your computer. Any other battery could ignite or explode.

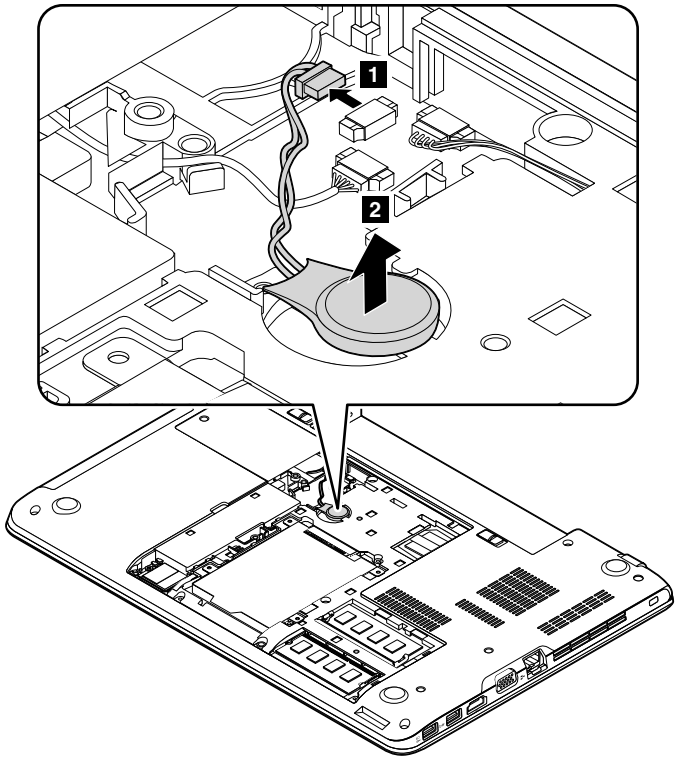

When installing: Ensure that the connector is attached firmly.

1110 Keyboard

For access, remove these FRUs in order:
- “1020 Battery pack” on page 66

Removal steps of the keyboard

Note: Depending on the model, your computer might look different from the illustrations in this topic.

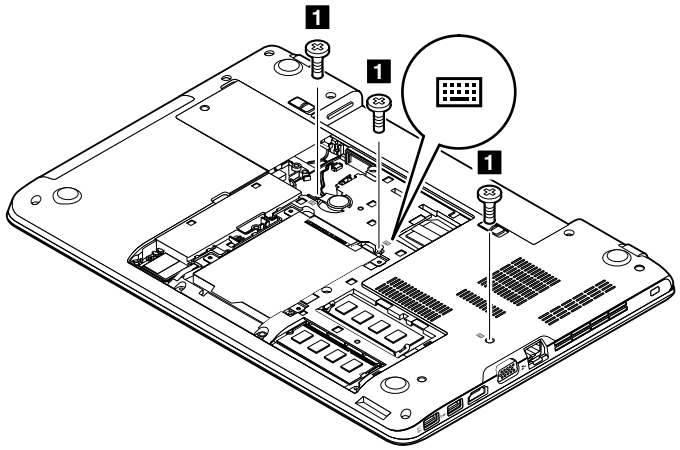

Step	Screw (quantity)	Color	Torque
1	M2 × 8 mm, flat-head, nylon-coated (3)	Black	0.181 Nm (1.85 kgf-cm)

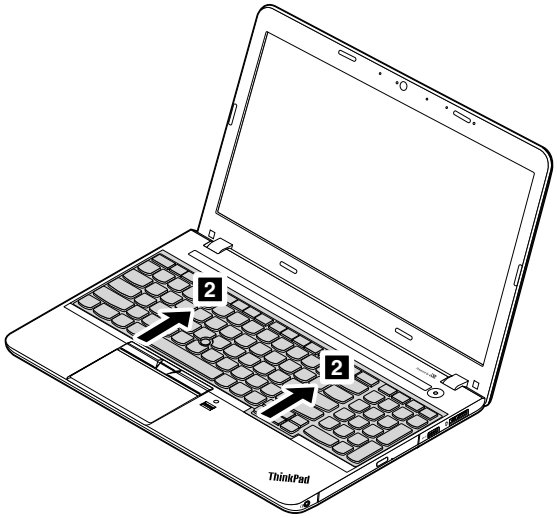

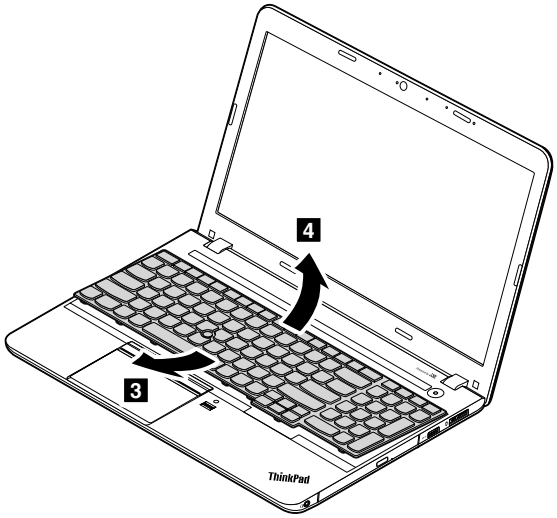

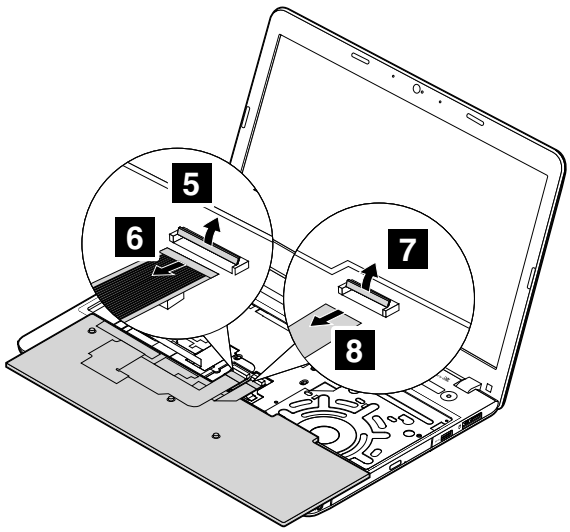

When installing: Ensure that the connector is attached firmly.

1120 Keyboard bezel assembly

For access, remove these FRUs in order:

- “1020 Battery pack” on page 66
- “1030 Large bottom cover” on page 67
- “1050 Optical drive or optical-drive bay bezel” on page 69
- “1070 Hard disk drive assembly or solid-state drive assembly” on page 70
- “1110 Keyboard” on page 73

Removal steps of the keyboard bezel assembly

Note: Depending on the model, your computer might look different from the illustrations in this topic.

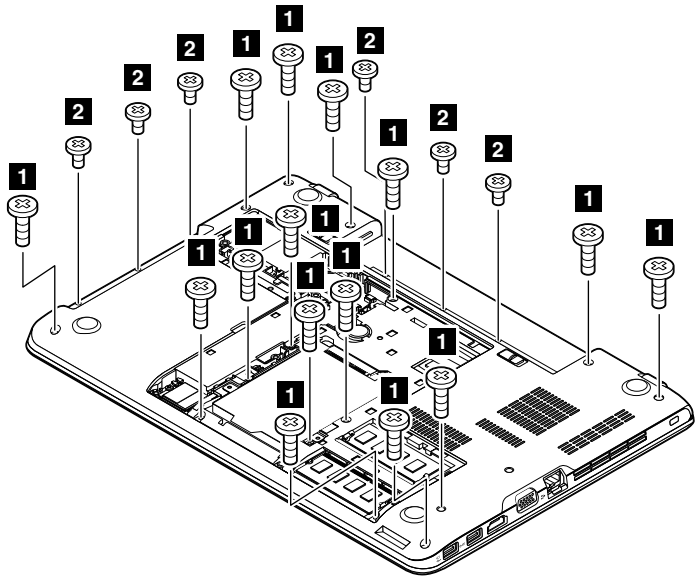

Step	Screw (quantity)	Color	Torque
1	M2 × 8 mm, wafer-head, nylon-coated (15)	Black	0.181 Nm (1.85 kgf-cm)
2	M2 × 3 mm, wafer-head, nylon-coated (6)	Black	0.181 Nm (1.85 kgf-cm)

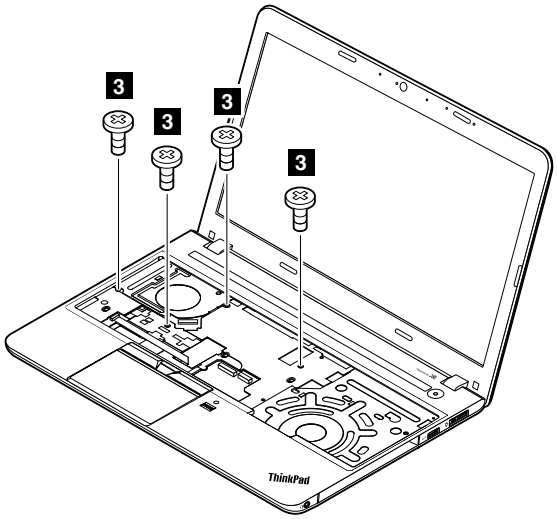

Step	Screw (quantity)	Color	Torque
3	M2 × 5 mm, wafer-head, nylon-coated (4)	Black	0.181 Nm (1.85 kgf-cm)

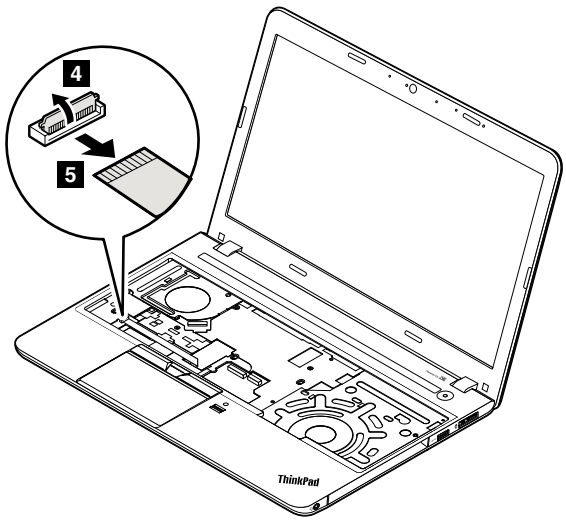

When installing: Ensure that the connectors are attached firmly to the system board.

In step **6**, release the keyboard bezel assembly from the frame using a plastic pry tool.

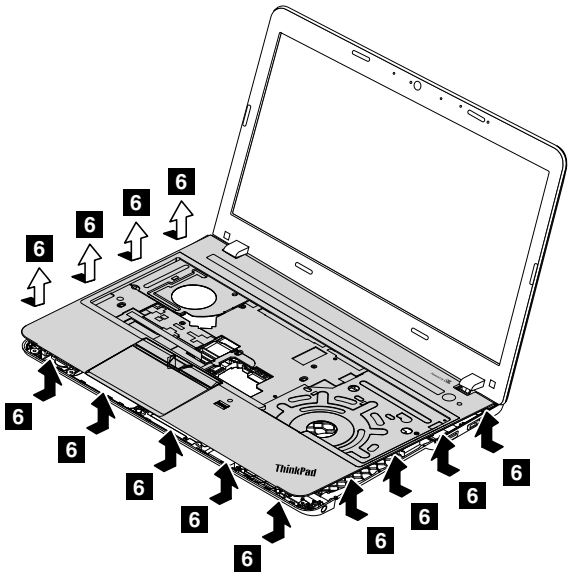

When installing: Ensure that all the latches are attached firmly.

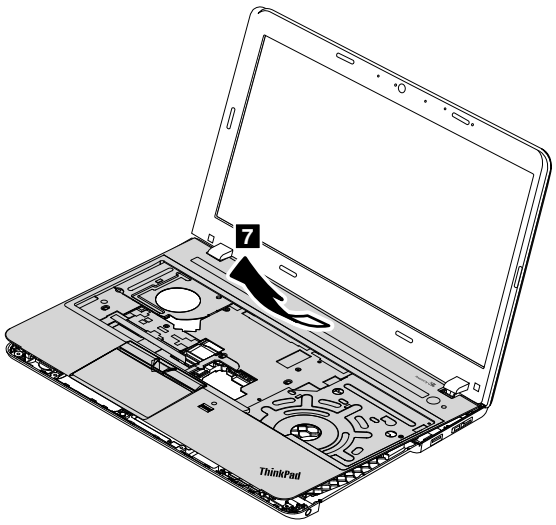

1130 System board and thermal fan

Important notices for handling the system board:

When handling the system board, read the following:

- The system board has an accelerometer, which can be broken when several thousands of G-forces are applied.

  Note: Dropping a system board from a height of as little as 6 inches so that it falls flat on a hard bench can subject the accelerometer to as much as 6000 G's of shock.
- Be careful not to drop the system board on a bench top that has a hard surface, such as metal, wood, or composite.
- Avoid rough handling of any kind.
- At every point in the process, be sure not to drop or stack the system board.
- If you put a system board down, be sure to put it only on a padded surface such as an ESD mat or a corrugated conductive surface.

For access, remove these FRUs in order:

- “1020 Battery pack” on page 66
- “1030 Large bottom cover” on page 67
- “1040 Small bottom cover” on page 68
- “1050 Optical drive or optical-drive bay bezel” on page 69
- “1060 Memory module” on page 70
- “1070 Hard disk drive assembly or solid-state drive assembly” on page 70
- “1080 Wireless LAN card” on page 72
- “1090 Coin-cell battery” on page 73
- “1110 Keyboard” on page 73
- “1120 Keyboard bezel assembly” on page 75

Attention: The following components soldered on the top side of the system board are extremely sensitive. When you service the system board, avoid any kind of rough handling.

ThinkPad E555

For models with a discrete thermal module

a Accelerated Processing Unit (APU)
b Fusion Controller Hub (FCH)
c Graphics Processing Unit (GPU)

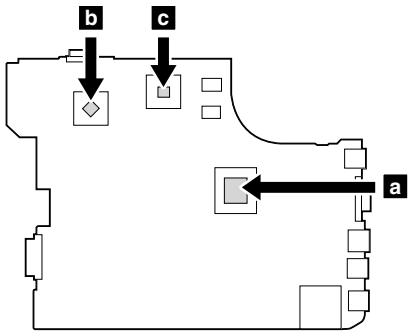

For models with an integrated thermal module

a Accelerated Processing Unit (APU)
b Fusion Controller Hub (FCH)

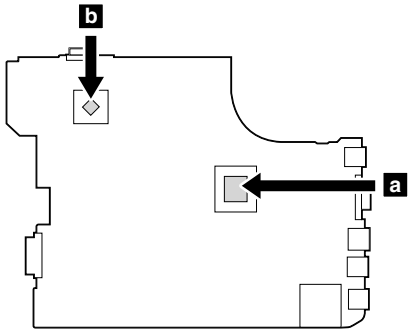

ThinkPad E550 and E550c

For models with a discrete thermal module

a Microprocessor
b Graphics Processing Unit (GPU)

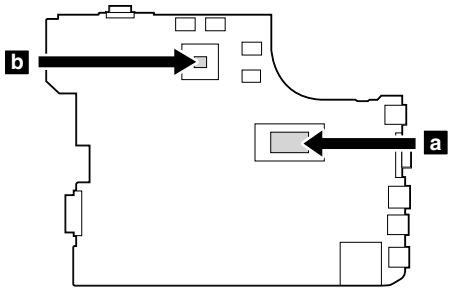

For models with an integrated thermal module

a Microprocessor

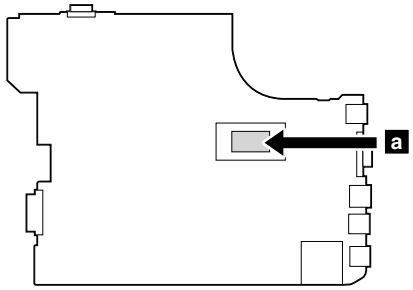

Removal steps of the system board

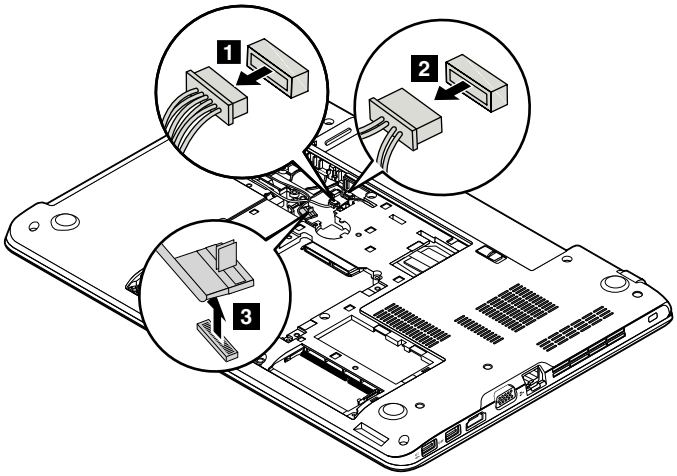

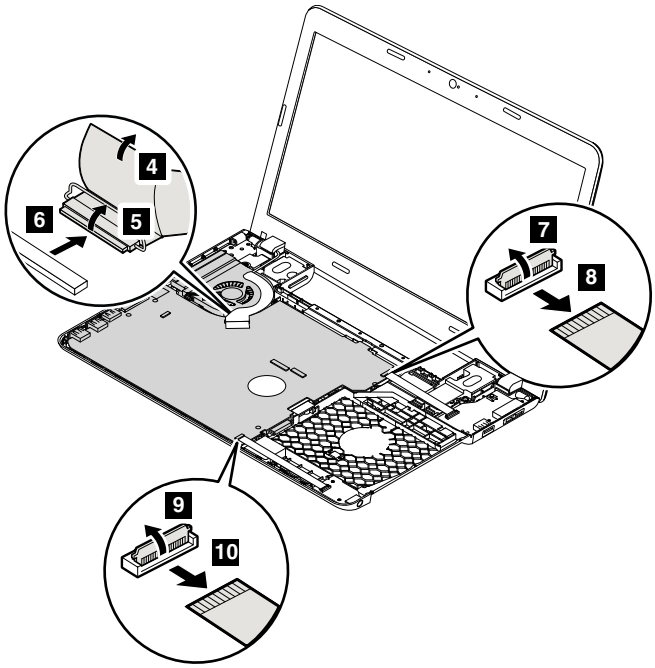

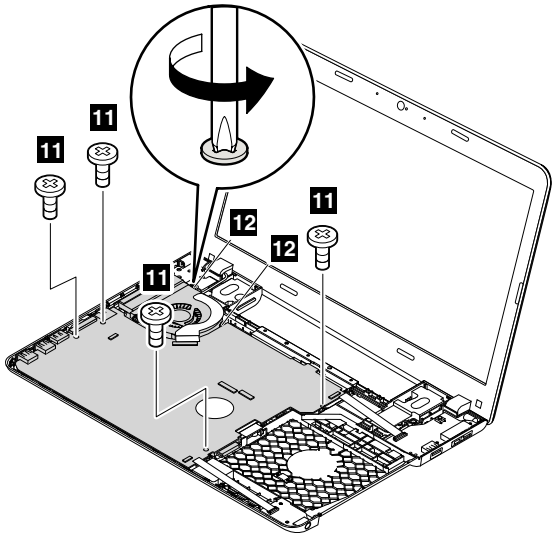

Step	Screw (quantity)	Color	Torque
11	M2 × 5 mm, flat-head, nylon-coated (4)	Black	0.181 Nm (1.85 kgf-cm)

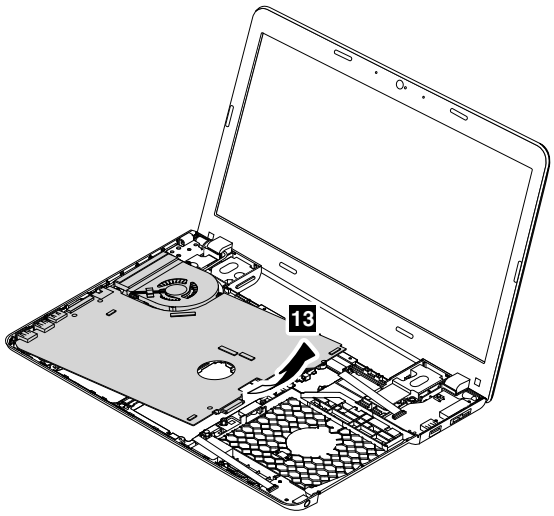

When installing: Ensure that the connectors are attached firmly.

Removal steps of the thermal fan

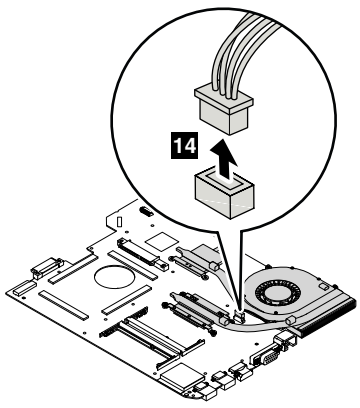

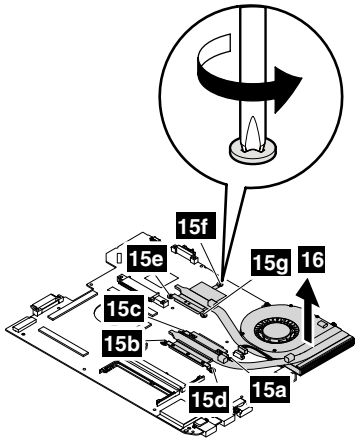

When installing:

- Ensure that the connector is attached firmly.
- Do not press the top of the fan cover and the fan hub.
- Before you attach the fan assembly to the computer, apply thermal grease, at an amount of 0.2 grams, on the part marked **a** as shown in the following illustrations. Either too much or too less application of grease can cause a thermal problem due to imperfect contact with a component. You need to peel the thin film off from the rubbers marked **b**.

For models with discrete thermal pipes

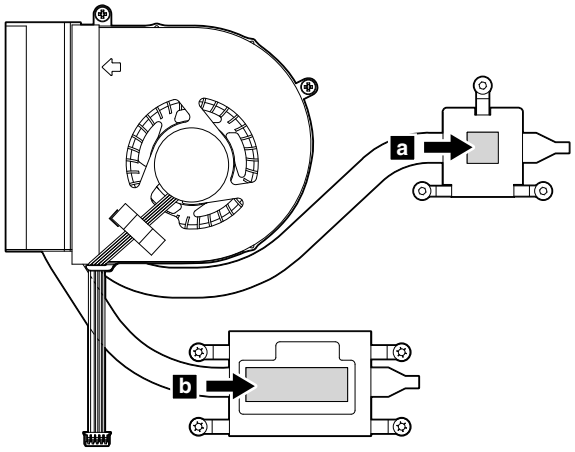

For models with an integrated thermal pipe

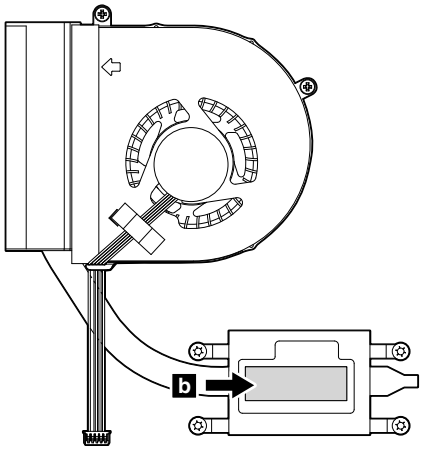

1140 dc-in/USB-connector board with cable

For access, remove these FRUs in order:

- “1020 Battery pack” on page 66
- “1030 Large bottom cover” on page 67
- “1050 Optical drive or optical-drive bay bezel” on page 69
- “1070 Hard disk drive assembly or solid-state drive assembly” on page 70
- “1110 Keyboard” on page 73
- “1120 Keyboard bezel assembly” on page 75

Removal steps of the dc-in/USB-connector board with cable

Note: The system board of the computer that you are servicing might be different from the one in the following illustrations.

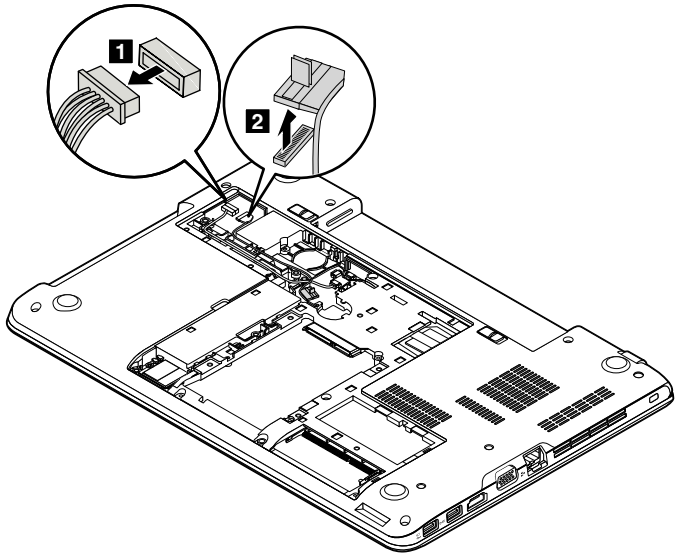

When installing: Ensure that the connector is attached firmly to the system board.

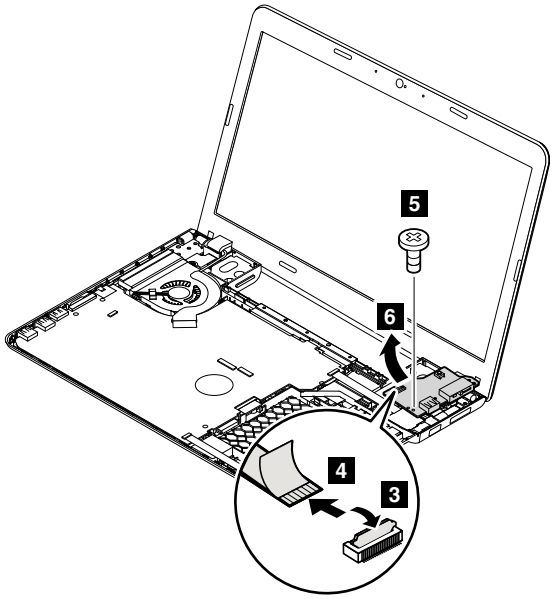

Step	Screw (quantity)	Color	Torque
5	M2 × 5 mm, wafer-head, nylon-coated (1)	Black	0.181 Nm (1.85 kgf-cm)

1150 Audio connector card with cable

For access, remove these FRUs in order:

- “1020 Battery pack” on page 66
- “1030 Large bottom cover” on page 67
- “1050 Optical drive or optical-drive bay bezel” on page 69
- “1070 Hard disk drive assembly or solid-state drive assembly” on page 70
- “1110 Keyboard” on page 73
- “1120 Keyboard bezel assembly” on page 75

Removal steps of the audio connector card with cable

Note: The system board of the computer that you are servicing might be different from the one in the following illustrations.

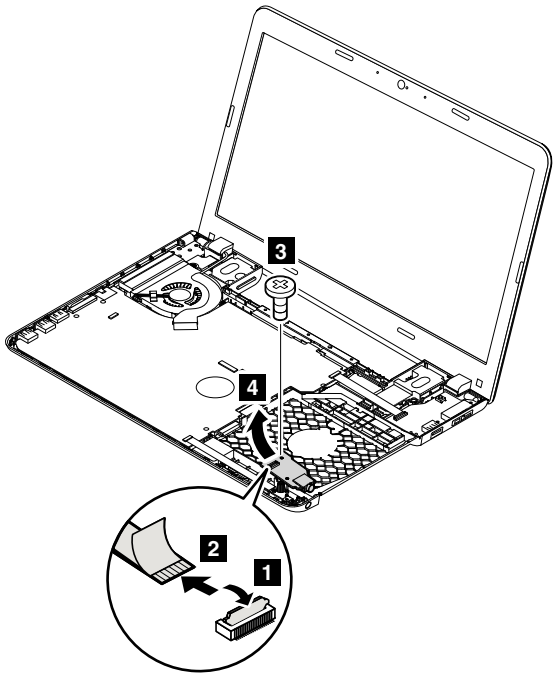

Step	Screw (quantity)	Color	Torque
3	M2 × 5 mm, wafer-head, nylon-coated (1)	Black	0.181 Nm (1.85 kgf-cm)

1160 Speaker assembly

For access, remove these FRUs in order:

- “1020 Battery pack” on page 66
- “1030 Large bottom cover” on page 67
- “1040 Small bottom cover” on page 68
- “1050 Optical drive or optical-drive bay bezel” on page 69
- “1070 Hard disk drive assembly or solid-state drive assembly” on page 70
- “1080 Wireless LAN card” on page 72
- “1090 Coin-cell battery” on page 73
- “1110 Keyboard” on page 73
- “1120 Keyboard bezel assembly” on page 75
- “1130 System board and thermal fan” on page 78
- “1140 dc-in/USB-connector board with cable” on page 83

Removal steps of the speaker assembly

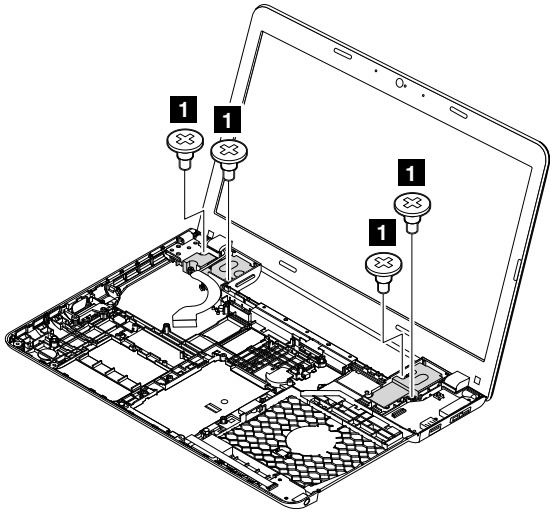

Step	Screw (quantity)	Color	Torque
1	M2 × 2.4 mm, wafer-head, nylon-coated, big head (4)	Black	0.181 Nm (1.85 kgf-cm)

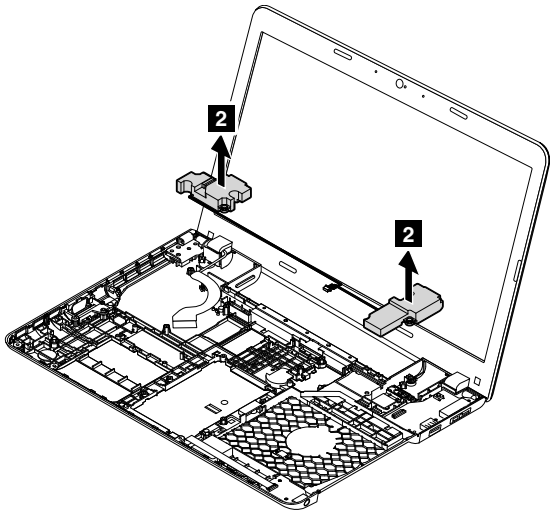

Cable routing: When you install the speaker assembly, route the cables as shown in the following illustration.

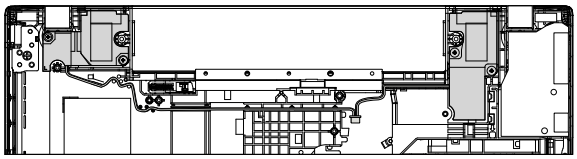

1170 LCD unit

For access, remove these FRUs in order:

- “1010 Lenovo-OneLink-connector cover” on page 66
- “1020 Battery pack” on page 66
- “1030 Large bottom cover” on page 67

- “1040 Small bottom cover” on page 68
- “1050 Optical drive or optical-drive bay bezel” on page 69
- “1070 Hard disk drive assembly or solid-state drive assembly” on page 70
- “1080 Wireless LAN card” on page 72
- “1090 Coin-cell battery” on page 73
- “1110 Keyboard” on page 73
- “1120 Keyboard bezel assembly” on page 75
- “1130 System board and thermal fan” on page 78
- “1140 dc-in/USB-connector board with cable” on page 83

Removal steps of the LCD unit

Note: The computer that you are servicing might be different from the one in the following illustrations.

In step **1**, release the wireless antenna cables from the cable guides.

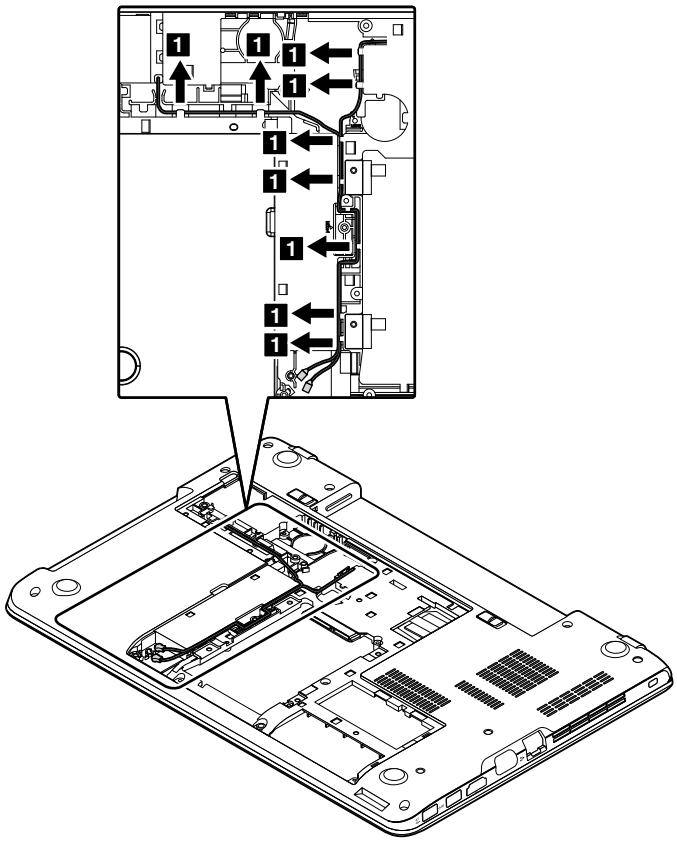

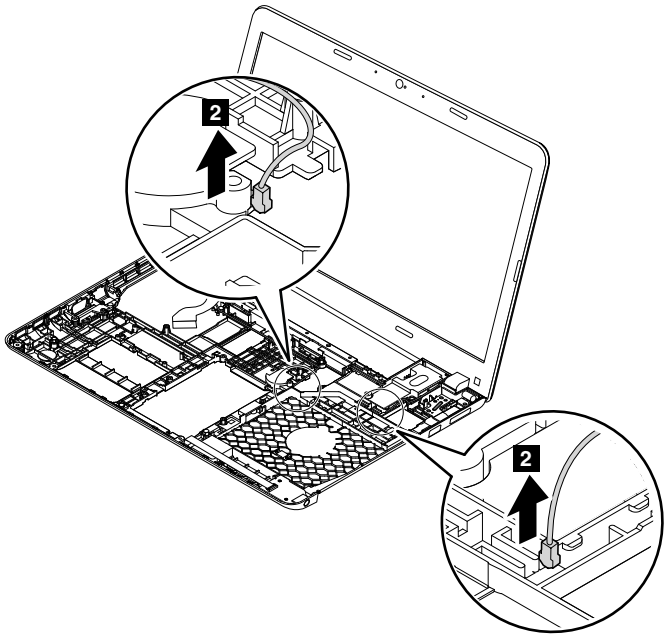

In step 3, release the cables from the cable guides.

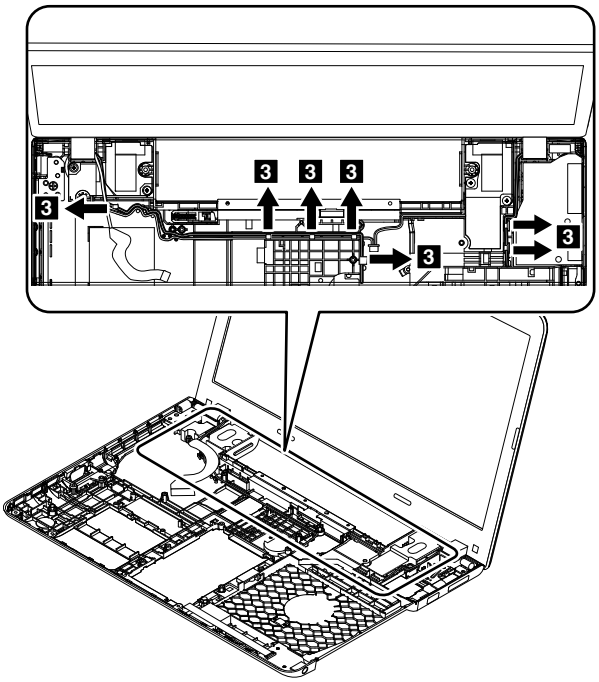

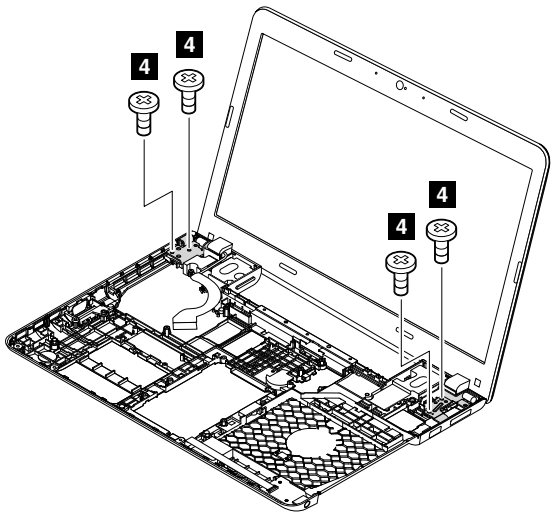

Step	Screw (quantity)	Color	Torque
4	M 2.5 × 5 mm, wafer-head, nylon-coated (4)	Black	0.294 Nm (3 kgf-cm)

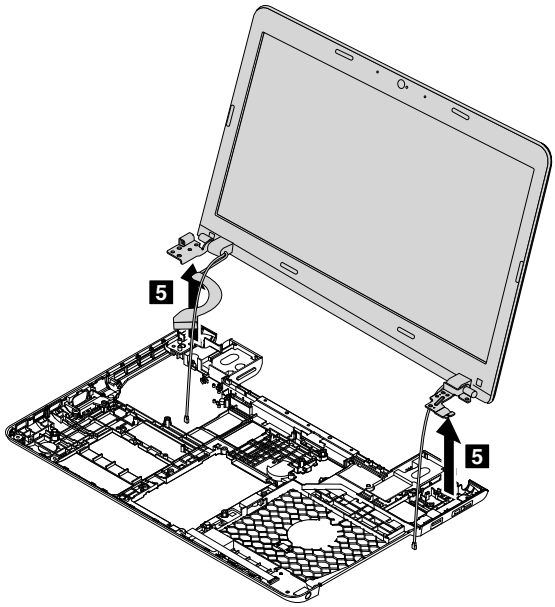

1180 Base cover assembly

For access, remove these FRUs in order:

- “1010 Lenovo-OneLink-connector cover” on page 66
- “1020 Battery pack” on page 66
- “1030 Large bottom cover” on page 67
- “1040 Small bottom cover” on page 68
- “1050 Optical drive or optical-drive bay bezel” on page 69
- “1070 Hard disk drive assembly or solid-state drive assembly” on page 70
- “1080 Wireless LAN card” on page 72
- “1090 Coin-cell battery” on page 73

- “1110 Keyboard” on page 73
- “1120 Keyboard bezel assembly” on page 75
- “1130 System board and thermal fan” on page 78
- “1140 dc-in/USB-connector board with cable” on page 83
- “1150 Audio connector card with cable” on page 84
- “1160 Speaker assembly” on page 85
- “1170 LCD unit” on page 86

Applying labels to the base cover assembly

The new base cover FRU is shipped with a kit containing labels of several kinds. Apply those labels when you replace the base cover. For the labels that are not shipped with the new base cover, peel them from the old base cover, and adhere them to the new one.

The following illustration shows the correct location of each label.

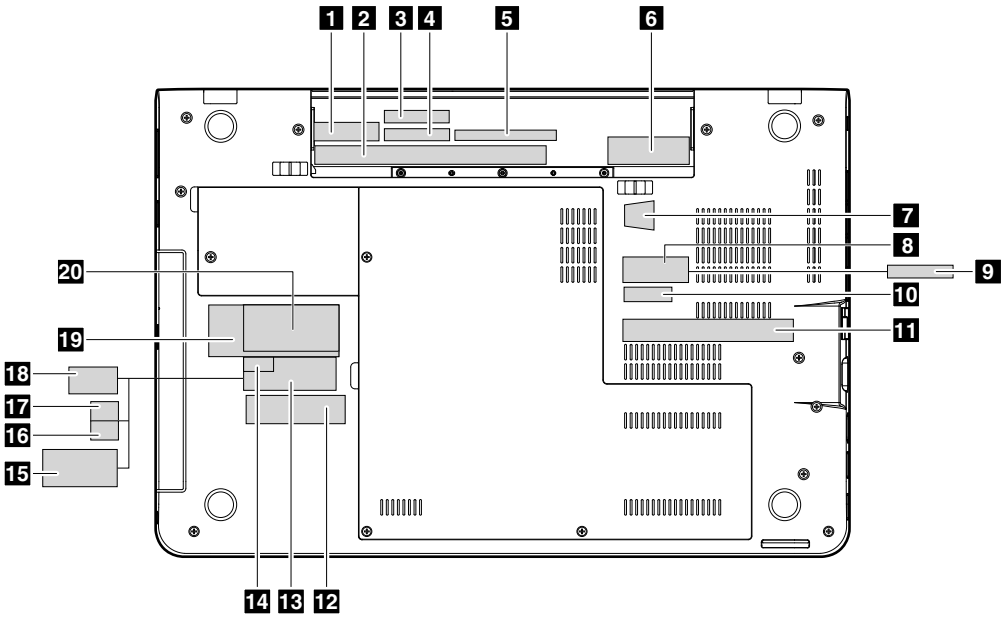

If the Windows Certificate of Authentication (COA) label 6 is attached to a part that is replaced, return the old part with the label attached to the customer, or provide a letter to the customer stating what the label was originally on the computer and what the label part number, serial number, and product key were.

When you replace the base cover, apply the FCC label 3 and the Serial number label 4.

For the labels listed in the following table, peel them off from the old base cover, and adhere them to the new base cover.

- 1 GEO label
- 2 Rating label
- 5 Japan GEO Information label
- 7 GML label
- 8 China GEO label
- 9 KCC safety label
- 10 China product label
- 11 India BIS label
- 12 Indonesia Rating label
- 13 Israel homologation label
- 14 ICASA label
- 15 China WWAN/modem label
- 16 Indonesia Postel label
- 17 Malaysia SIRIM label
- 18 Brazil Anatel label
- 19 SVT label
- 20 Asset tag

If the removed cover has two FCC labels, apply both to the new base cover.

2010 LCD bezel

For access, remove these FRUs in order:
- “1010 Lenovo-OneLink-connector cover” on page 66
- “1020 Battery pack” on page 66
- “1030 Large bottom cover” on page 67
- “1040 Small bottom cover” on page 68
- “1050 Optical drive or optical-drive bay bezel” on page 69
- “1070 Hard disk drive assembly or solid-state drive assembly” on page 70
- “1080 Wireless LAN card” on page 72
- “1090 Coin-cell battery” on page 73
- “1110 Keyboard” on page 73
- “1120 Keyboard bezel assembly” on page 75
- “1130 System board and thermal fan” on page 78
- “1140 dc-in/USB-connector board with cable” on page 83
- “1150 Audio connector card with cable” on page 84
- “1170 LCD unit” on page 86

Removal steps of the LCD bezel

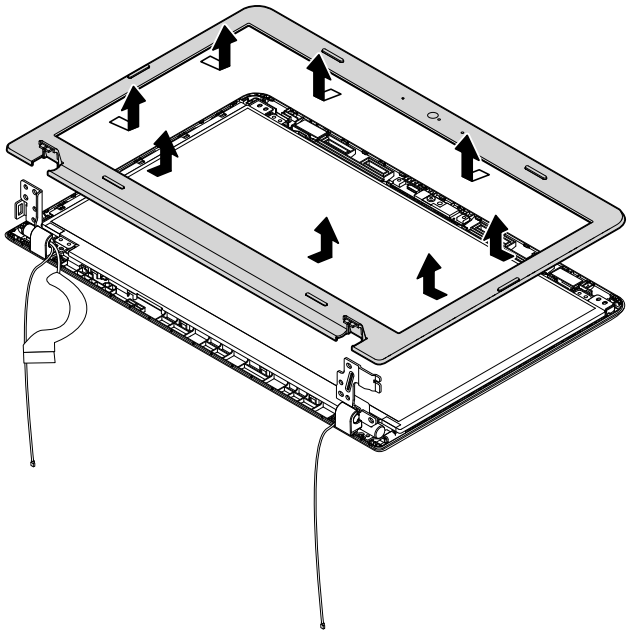

When installing: Ensure that all the latches are attached firmly.

2020 LCD panel

For access, remove these FRUs in order:
- “1010 Lenovo-OneLink-connector cover” on page 66
- “1020 Battery pack” on page 66
- “1030 Large bottom cover” on page 67
- “1040 Small bottom cover” on page 68
- “1050 Optical drive or optical-drive bay bezel” on page 69
- “1070 Hard disk drive assembly or solid-state drive assembly” on page 70
- “1080 Wireless LAN card” on page 72
- “1090 Coin-cell battery” on page 73
- “1110 Keyboard” on page 73

- “1120 Keyboard bezel assembly” on page 75
- “1130 System board and thermal fan” on page 78
- “1140 dc-in/USB-connector board with cable” on page 83
- “1150 Audio connector card with cable” on page 84
- “1170 LCD unit” on page 86
- “2010 LCD bezel” on page 92

Removal steps of the LCD panel

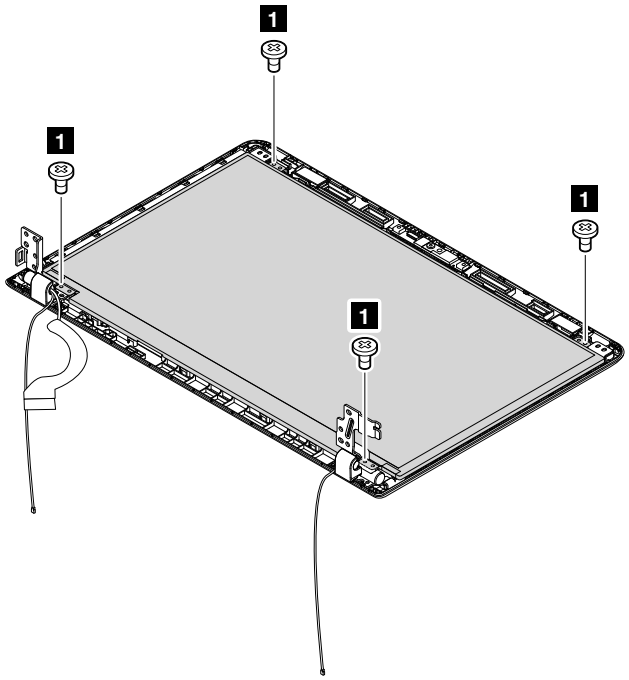

Step	Screw (quantity)	Color	Torque
1	M2 × 3 mm, wafer-head, nylon-coated, small head (4)	Black	0.181 Nm (1.85 kgf-cm)

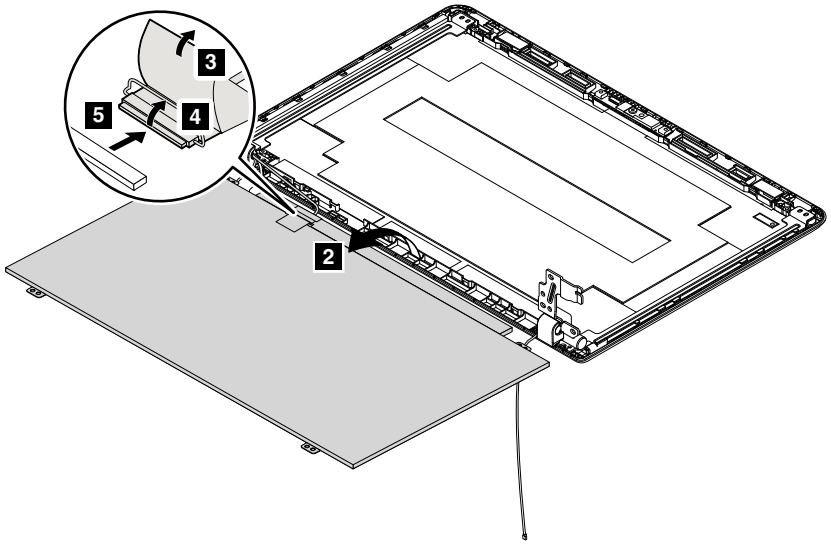

When installing: Ensure that the LCD connector is attached firmly.

2030 LCD hinges

For access, remove these FRUs in order:

- “1010 Lenovo-OneLink-connector cover” on page 66
- “1020 Battery pack” on page 66
- “1030 Large bottom cover” on page 67
- “1040 Small bottom cover” on page 68
- “1050 Optical drive or optical-drive bay bezel” on page 69
- “1070 Hard disk drive assembly or solid-state drive assembly” on page 70
- “1080 Wireless LAN card” on page 72
- “1090 Coin-cell battery” on page 73
- “1110 Keyboard” on page 73
- “1120 Keyboard bezel assembly” on page 75
- “1130 System board and thermal fan” on page 78
- “1140 dc-in/USB-connector board with cable” on page 83
- “1150 Audio connector card with cable” on page 84
- “1170 LCD unit” on page 86
- “2010 LCD bezel” on page 92

Removal steps of the LCD hinges

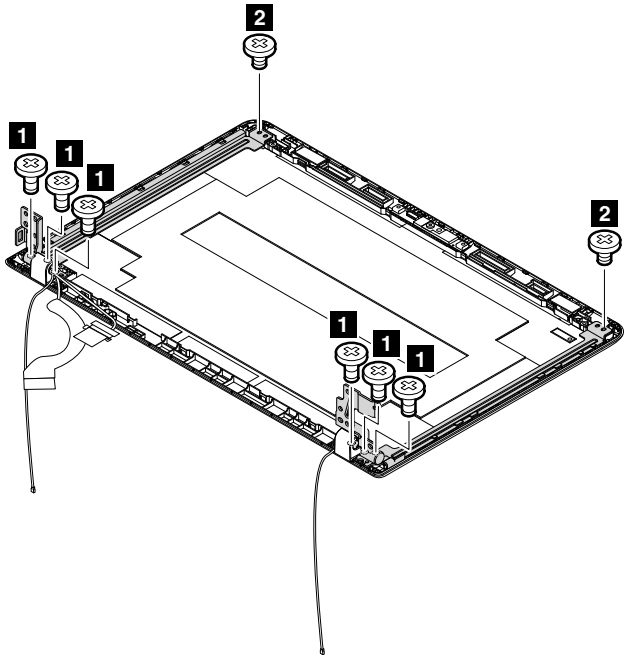

Step	Screw (quantity)	Color	Torque
1	M2.5 × 4mm, wafer-head, nylon-coated (6)	Silver	0.294 Nm (3 kgf-cm)
2	M2 × 3 mm, wafer-head, nylon-coated (2)	Black	0.181 Nm (1.85 kgf-cm)

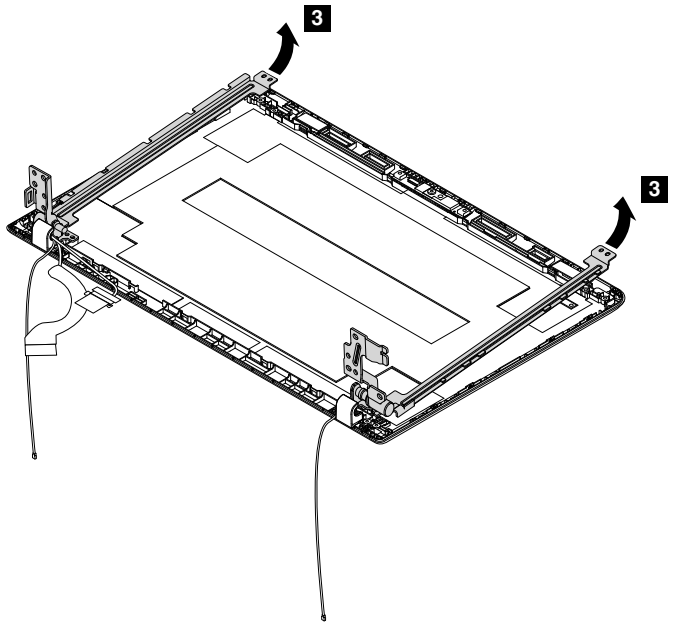

2040 Camera/microphone module for models with a 2D camera

For access, remove these FRUs in order:

- “1010 Lenovo-OneLink-connector cover” on page 66
- “1020 Battery pack” on page 66
- “1030 Large bottom cover” on page 67
- “1040 Small bottom cover” on page 68
- “1050 Optical drive or optical-drive bay bezel” on page 69
- “1070 Hard disk drive assembly or solid-state drive assembly” on page 70
- “1080 Wireless LAN card” on page 72
- “1090 Coin-cell battery” on page 73
- “1110 Keyboard” on page 73
- “1120 Keyboard bezel assembly” on page 75
- “1130 System board and thermal fan” on page 78
- “1140 dc-in/USB-connector board with cable” on page 83
- “1150 Audio connector card with cable” on page 84
- “1170 LCD unit” on page 86
- “2010 LCD bezel” on page 92
- “2020 LCD panel” on page 92

Removal steps of the camera/microphone module

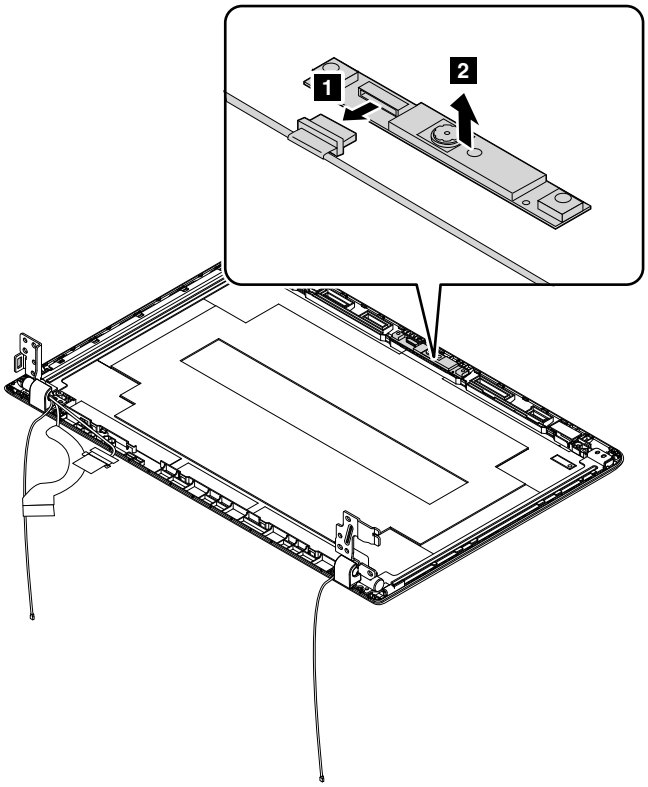

When installing: Ensure that the connector is attached firmly.

2050 Camera and microphone modules for models with a 3D camera

For access, remove these FRUs in order:

- “1010 Lenovo-OneLink-connector cover” on page 66
- “1020 Battery pack” on page 66
- “1030 Large bottom cover” on page 67
- “1040 Small bottom cover” on page 68
- “1050 Optical drive or optical-drive bay bezel” on page 69
- “1070 Hard disk drive assembly or solid-state drive assembly” on page 70
- “1080 Wireless LAN card” on page 72
- “1090 Coin-cell battery” on page 73
- “1110 Keyboard” on page 73
- “1120 Keyboard bezel assembly” on page 75
- “1130 System board and thermal fan” on page 78
- “1140 dc-in/USB-connector board with cable” on page 83
- “1150 Audio connector card with cable” on page 84
- “1170 LCD unit” on page 86
- “2010 LCD bezel” on page 92
- “2020 LCD panel” on page 92

Removal steps of the camera and microphone modules

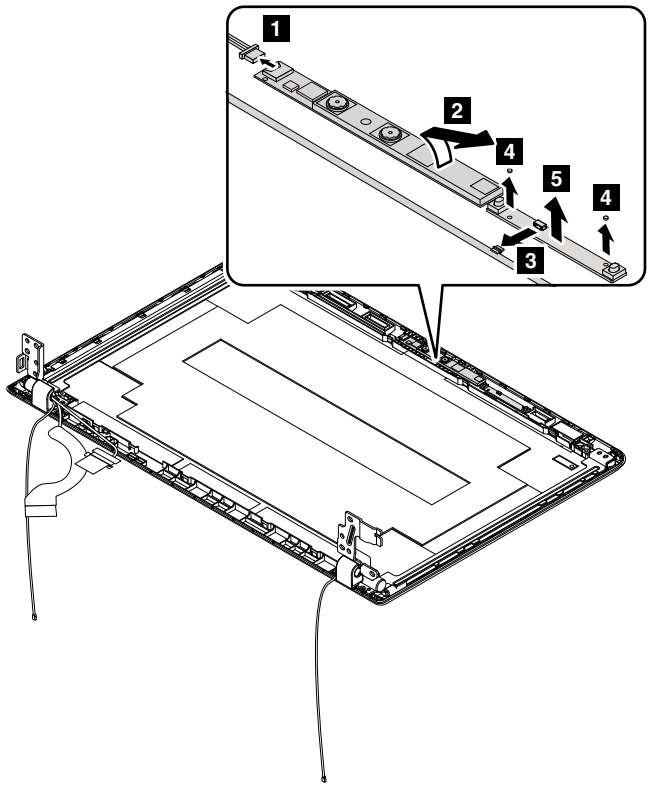

When installing: Ensure that the connector is attached firmly.

2060 LCD cables

For access, remove these FRUs in order:

- “1010 Lenovo-OneLink-connector cover” on page 66
- “1020 Battery pack” on page 66
- “1030 Large bottom cover” on page 67
- “1040 Small bottom cover” on page 68
- “1050 Optical drive or optical-drive bay bezel” on page 69
- “1070 Hard disk drive assembly or solid-state drive assembly” on page 70
- “1080 Wireless LAN card” on page 72
- “1090 Coin-cell battery” on page 73
- “1110 Keyboard” on page 73
- “1120 Keyboard bezel assembly” on page 75
- “1130 System board and thermal fan” on page 78
- “1140 dc-in/USB-connector board with cable” on page 83
- “1150 Audio connector card with cable” on page 84
- “1170 LCD unit” on page 86
- “2010 LCD bezel” on page 92
- “2020 LCD panel” on page 92

Removal steps of LCD cables

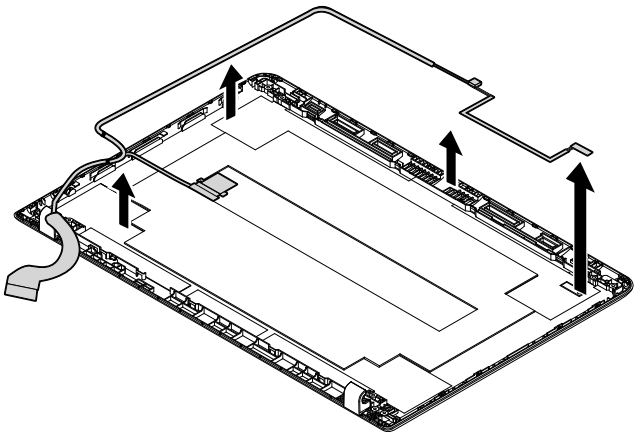

2070 Wireless LAN assembly and LCD rear cover

For access, remove these FRUs in order:

- “1010 Lenovo-OneLink-connector cover” on page 66
- “1020 Battery pack” on page 66
- “1030 Large bottom cover” on page 67
- “1040 Small bottom cover” on page 68
- “1050 Optical drive or optical-drive bay bezel” on page 69
- “1070 Hard disk drive assembly or solid-state drive assembly” on page 70
- “1080 Wireless LAN card” on page 72
- “1090 Coin-cell battery” on page 73
- “1110 Keyboard” on page 73
- “1120 Keyboard bezel assembly” on page 75
- “1130 System board and thermal fan” on page 78
- “1140 dc-in/USB-connector board with cable” on page 83
- “1150 Audio connector card with cable” on page 84
- “1170 LCD unit” on page 86
- “2010 LCD bezel” on page 92
- “2020 LCD panel” on page 92

Removal steps of the wireless LAN antenna assembly and the LCD rear cover

Release the antenna cables from the cable guides on the LCD rear cover.

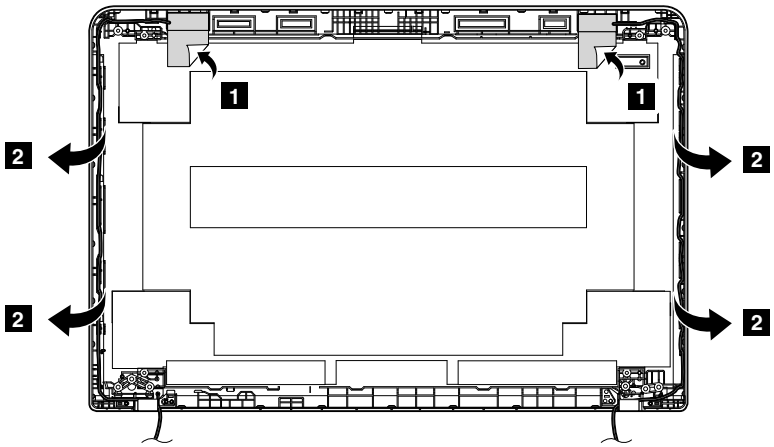

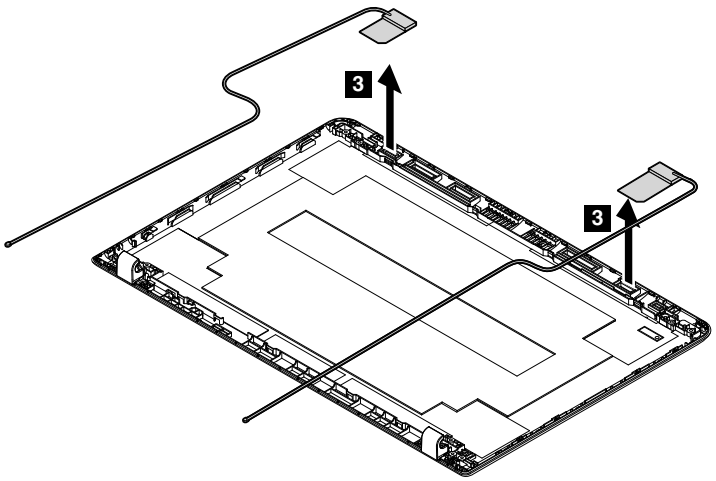

Attention: When you route the cables, ensure that they are not subject to any tension. Tension could cause the cables to be damaged by the cable guides, or a wire to be broken.

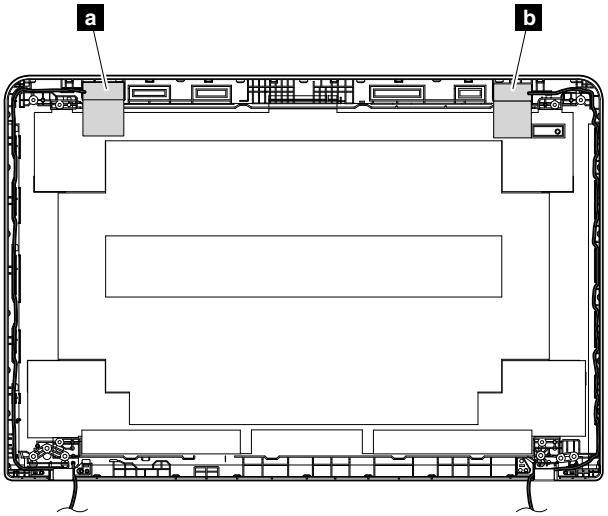

Antenna locations

a Wireless-LAN auxiliary antenna (black)
d Wireless-LAN main antenna (gray)

Appendix A. Notices

Lenovo may not offer the products, services, or features discussed in this document in all countries. Consult your local Lenovo representative for information on the products and services currently available in your area. Any reference to a Lenovo product, program, or service is not intended to state or imply that only that Lenovo product, program, or service may be used. Any functionally equivalent product, program, or service that does not infringe any Lenovo intellectual property right may be used instead. However, it is the user's responsibility to evaluate and verify the operation of any other product, program, or service.

Lenovo may have patents or pending patent applications covering subject matter described in this document. The furnishing of this document does not give you any license to these patents. You can send license inquiries, in writing, to:

Lenovo (United States), Inc.
1009 Think Place - Building One
Morrisville, NC 27560
U.S.A.
Attention: Lenovo Director of Licensing

LENOVO PROVIDES THIS PUBLICATION "AS IS" WITHOUT WARRANTY OF ANY KIND, EITHER EXPRESS OR IMPLIED, INCLUDING, BUT NOT LIMITED TO, THE IMPLIED WARRANTIES OF NON-INFRINGEMENT, MERCHANTABILITY OR FITNESS FOR A PARTICULAR PURPOSE. Some jurisdictions do not allow disclaimer of express or implied warranties in certain transactions, therefore, this statement may not apply to you.

This information could include technical inaccuracies or typographical errors. Changes are periodically made to the information herein; these changes will be incorporated in new editions of the publication. Lenovo may make improvements and/or changes in the product(s) and/or the program(s) described in this publication at any time without notice.

The products described in this document are not intended for use in implantation or other life support applications where malfunction may result in injury or death to persons. The information contained in this document does not affect or change Lenovo product specifications or warranties. Nothing in this document shall operate as an express or implied license or indemnity under the intellectual property rights of Lenovo or third parties. All information contained in this document was obtained in specific environments and is presented as an illustration. The result obtained in other operating environments may vary.

Lenovo may use or distribute any of the information you supply in any way it believes appropriate without incurring any obligation to you.

Any references in this publication to non-Lenovo Web sites are provided for convenience only and do not in any manner serve as an endorsement of those Web sites. The materials at those Web sites are not part of the materials for this Lenovo product, and use of those Web sites is at your own risk.

Any performance data contained herein was determined in a controlled environment. Therefore, the result obtained in other operating environments may vary significantly. Some measurements may have been made on development-level systems and there is no guarantee that these measurements will be the same on generally available systems. Furthermore, some measurements may have been estimated through extrapolation. Actual results may vary. Users of this document should verify the applicable data for their specific environment.

© Copyright Lenovo 2014, 2015

Electronic emission notices

For electronic emission information on Class B digital devices, refer to the corresponding information in the *User Guide*.

EU contact: Lenovo, Einsteinova 21, 851 01 Bratislava, Slovakia

CE

Trademarks

The following terms are trademarks of Lenovo in the United States, other countries or both:

Lenovo
Lenovo logo
ThinkPad
ThinkPad logo
TrackPoint
Ultrabay

Microsoft, Windows, and Windows Server are trademarks of the Microsoft group of companies.

Intel is a trademark or registered trademarks of Intel Corporation or its subsidiaries in the United States and other countries.

The terms HDMI and HDMI High-Definition Multimedia Interface are trademarks or registered trademarks of HDMI Licensing LLC in the United States and other countries.

Other company, product, or service names may be the trademarks or service marks of others.

Appendix B. Abbreviation and acronym table

The following table lists some abbreviations and acronyms which might be used in this manual.

Abbreviation	Term
3G	third generation of mobile telecommunications technology
BGA	Ball Grid Array
BIOS	basic input/output system
CMOS	complementary metal-oxide semiconductor
COA	Certificate of Authentication
CRC	cyclic redundancy check
CRT	cathode ray tube
CRU	customer-replaceable unit
CTO	Configure To Order
EAIA	Enhanced Asset Information Area
ECA	Engineering Change Announcements
EEPROM	Electrically Erasable Programmable Read-Only Memory
EFI	Extensible Firmware Interface
EPO	emergency power-off
ESD	electrostatic discharge
EU	European Union
FCC	Federal Communications Commission
FRU	Field Replaceable Unit
GAV	General Announce Variant
GPU	graphics processing unit
HDD	hard disk drive
HDMI	high-definition multimedia interface
ICs	integrated circuits
ICCID	integrate circuit card identity
ISO	International Standardization Organization
LAN	local area network
LCD	liquid crystal display
MAC	media access control
MT	machine type
MTM	machine type and model
PC	personal computer
PCH	Platform Controller Hub
POST	power-on self-test
RAM	random-access memory

© Copyright Lenovo 2014, 2015

Abbreviation	Term
RF	radio frequency
RFID	radio-frequency identification
RI	ring indicator
RJ	registered jack
SATA	Serial Advanced Technology Attachment
SIM	subscriber identity module
SVP	supervisor password
TFTs	thin-film transistors
UEFI	Unified Extensible Firmware Interface
USB	Universal Serial Bus
UUID	universally unique identifier
VGA	video graphics array
VRAM	video random-access memory
WAN	wide area network

ThinkPad®

Part Number: SP40A27128_01

Printed in China

(1P) P/N: SP40A27128_01