lenovo

ThinkServer RD450
User Guide and Hardware Maintenance Manual

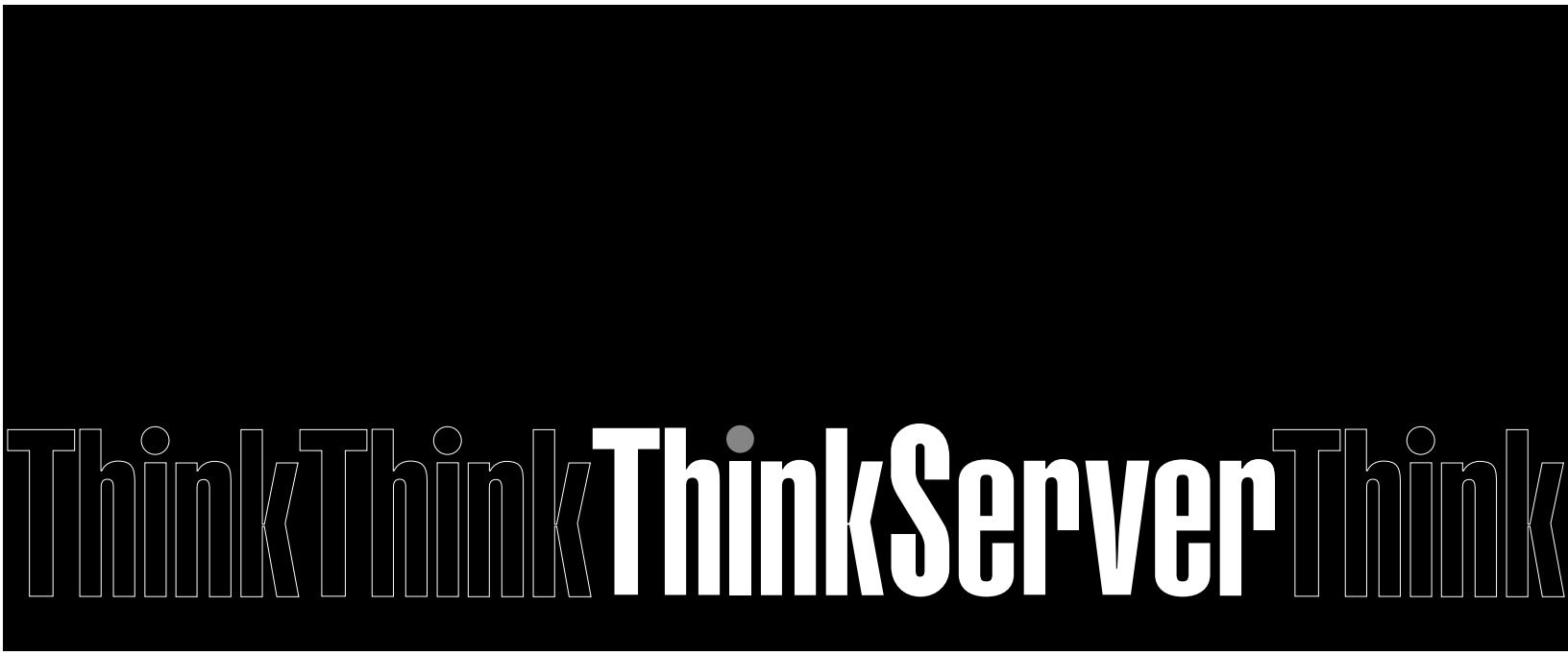

Machine Types: 70DA, 70DB, 70DC, 70DD, 70DE, 70DF, 70DV, and 70DW

Note: Before using the information and the product it supports, be sure to read and understand the following:

- The *Read Me First* that comes with your product
- “Safety information” on page iii
- Appendix A “Notices” on page 179

First Edition (December 2014)

© Copyright Lenovo 2014.

LIMITED AND RESTRICTED RIGHTS NOTICE: If data or software is delivered pursuant a General Services Administration “GSA” contract, use, reproduction, or disclosure is subject to restrictions set forth in Contract No. GS-35F-05925.

Contents

Safety information iii
Products that are not assessed x
Safety inspection guide x
Grounding requirements xi

Chapter 1. General information 1
Introduction 1
Server documentation 2

Chapter 2. Server setup road map . . . 5

Chapter 3. Product overview 7
Server package 7
Features 7
Specifications 12
Software 12
BIOS and TSM update utilities 13
Lenovo Partner Pack for Microsoft System Center Operations Management 13
Lenovo Partner Pack for vSphere vCenter Server 13
Lenovo ThinkServer Deployment Manager . . 13
Lenovo ThinkServer Diagnostics 14
Lenovo ThinkServer Energy Manager 14
Lenovo ThinkServer Operating System-based Platform Update Tool 15
Lenovo ThinkServer Power Planner 15
Lenovo ThinkServer System Manager 15
Lenovo ThinkServer System Manager Premium 15
Locations 15
Machine type, model, and serial number label 15
Front view of the server 16
Front panel 21
Rear view of the server 23
Server components 25
AnyRAID adapter and RAID card 28
Hot-swap-drive backplane 34
System board components 38
System board jumpers 41
Hot-swap-drive status LEDs 43
Power supply status LEDs 44
Connecting cables 44

Chapter 4. Turning on and turning off the server 45
Turning on the server 45
Turning off the server 45

Chapter 5. Configuring the server . . 47
Using the Setup Utility program 47
Starting the Setup Utility program 47
Viewing information in the Setup Utility program 47
Setup Utility program interface 47
Setting the system date and time 50
Using passwords 50
Selecting a startup device 51
Configuring the TPM function 52
Setting an Ethernet connector for system management 52
Exiting the Setup Utility program 52
Updating or recovering the BIOS 53
Configuring RAID 54
About RAID 54
Configuring RAID using the Lenovo ThinkServer Deployment Manager program . 56
Configuring the advanced SATA or SAS hardware RAID 56
Updating the firmware 57

Chapter 6. Replacing hardware 59
Guidelines 59
Precautions 59
Handling static-sensitive devices 60
System reliability guidelines 60
Working inside the server with the power on . 61
Removing or extending the server from the rack cabinet 61
Removing the server cover 61
Installing, removing, or replacing hardware . . . 63
Removing and reinstalling the rack handles . 63
Removing and reinstalling the cooling shroud 64
Installing or replacing a system fan 66
Removing and reinstalling the system fan cage 68
Installing or removing a memory module . . . 70
Replacing the riser card 77
Installing or removing a PCI Express card: Ethernet card, RAID card, and other supported types of PCI Express cards 82
Replacing the AnyRAID adapter 93
Installing or removing the AnyRAID flash module 95

© Copyright Lenovo 2014

Installing or removing the Lenovo ThinkServer RAID 110i upgrade key 97
Installing or removing the Lenovo ThinkServer RAID 510i upgrade key 99
Installing or removing the Lenovo ThinkServer RAID 500 upgrade key 102
Installing or removing the optical module . . 104
Installing or removing the secure digital module 108
Installing or removing the ThinkServer System Manager Premium module 110
Installing or removing the ThinkServer Trusted Platform Module 112
Installing or replacing a hot-swap redundant power supply 114
Installing or replacing a heat sink. 118
Installing or replacing the microprocessor . . 120
Installing or removing the ThinkServer RAID Super Capacitor Module 129
Installing or replacing a hot-swap drive . . . 131
Installing a 2.5-inch solid-state drive into a 3.5-inch-drive bay 134
Replacing the hot-swap-drive backplane . . 138
Replacing the front panel board 140
Installing or removing the intrusion switch . . 141
Installing or replacing the optical drive . . . 143
Installing or replacing the tape drive 152
Replacing the coin-cell battery 158
For service technician only: replacing the system board 160
Completing the parts replacement 165
Reinstalling the server cover and reconnecting cables 165
Updating the server configuration 168

Chapter 7. Troubleshooting and diagnostics 169
Troubleshooting procedure 169
Viewing the status and diagnostic LEDs. 169
Viewing the system event log 170
Basic troubleshooting tables 170
Lenovo ThinkServer Deployment Manager program problems 170
Optical drive problems. 170
Storage drive problems 171
Memory module problems 172
Keyboard, mouse, and USB device problems 173

Chapter 8. Getting information, help, and service 175
Information resources 175
Using the documentation. 175
ThinkServer Web site 175
Lenovo Support Web site. 175
Help and service 176
Before you call 176
Calling for service. 176
Using other services 177
Purchasing additional services 177

Appendix A. Notices. 179
Trademarks 180
Important notes 180
Polyvinyl Chloride (PVC) cable and cord notice . . 180
Recycling information 180
Battery return program. 181
Requirement for batteries containing perchlorate 181
Recycling information for Brazil 182
Particulate contamination 182
Important WEEE information 183
Restriction of Hazardous Substances Directive (RoHS) 183
European Union RoHS. 183
German Ordinance for Work gloss statement. . . 183
Export classification notice 183
Electronic emission notices. 184
Federal Communications Commission (FCC) Statement. 184
Eurasian compliance mark 185
ENERGY STAR model information 186

Index. 187

Safety information

Note: Before using the product, be sure to read and understand the multilingual safety instructions on the documentation DVD that comes with the product.

قبل استخدام المنتج، تأكد من قراءة إرشادات الأمان متعددة اللغات وفهمها، وتوجد هذه الإرشادات في قرص DVD الوثائقي الذي يأتي مع المنتج.

Antes de usar o produto, leia e entenda as instruções de segurança multilíngues no DVD de documentação que o acompanha.

Преди да използвате този продукт, задължително прочетете и вникнете в многоезичните инструкции за безопасност в DVD диска с документация, който се предоставя с продукта.

Prije upotrebe ovog proizvoda obavezno pročitajte višejezične sigurnosne upute koje se nalaze na DVD-u s dokumentacijom koji dobivate uz proizvod.

Před použitím produktu je třeba si přečíst a porozumět bezpečnostním pokynům uvedeným na disku DVD s dokumentací, který je dodáván s produktem.

Før du bruger produktet, skal du sørge for at læse og forstå de sikkerhedsforskrifter, der findes på flere sprog, på den dokumentations-dvd, der følger med produktet.

Lue tuotteen mukana toimitetulla DVD-tietolevyllä olevat monikieliset turvaohjeet ennen tämän tuotteen käyttöä.

Avant d'utiliser le produit, veillez à bien lire et comprendre les instructions de sécurité multilingues figurant sur le DVD de documentation fourni avec le produit.

Πριν χρησιμοποιήσετε το προϊόν, βεβαιωθείτε ότι έχετε διαβάσει και κατανοήσει τις οδηγίες ασφάλειας, οι οποίες είναι διαθέσιμες σε διάφορες γλώσσες στο DVD τεκμηρίωσης που συνοδεύει το προϊόν.

Vor Verwendung des Produkts sollten Sie unbedingt die mehrsprachigen Sicherheitsanweisungen auf der Dokumentations-DVD lesen, die im Lieferumfang des Produkts enthalten ist.

לפני השימוש במוצר, הקפידו לקרוא ולהבין את הוראות הבטיחות, המופיעות בשפות שונות ב-DVD התיעוד המצורף למוצר.

A termék használata előtt mindenképpen olvassa el és értelmezze a termékhez kapott dokumentációs DVD lemezen található, több nyelven elolvasható biztonsági előírásokat.

Prima di utilizzare il prodotto, accertarsi di leggere e comprendere le informazioni sulla sicurezza multilingue disponibili sul DVD di documentazione fornito con il prodotto.

製品をご使用になる前に、製品に付属の Documentation DVD に収録されているマルチリンガルの「安全に正しくご使用いただくために」を読んで理解してください。

제품을 사용하기 전에 제품과 함께 제공되는 문서 DVD의 다국어 안전 지침을 주의 깊게 읽어보십시오.

Voordat u het product gebruikt, moet u ervoor zorgen dat u de meertalige veiligheidsinstructies op de documentatie-dvd van het product hebt gelezen en begrijpt.

© Copyright Lenovo 2014

Przed skorzystaniem z produktu należy zapoznać się z wielojęzycznymi instrukcjami bezpieczeństwa znajdującymi się na płycie DVD z dokumentacją dostarczoną wraz z produktem.

Antes de utilizar o produto, leia atentamente as instruções de segurança multilingues que constam no DVD de documentação fornecido com o produto.

Înainte de a utiliza produsul, asigurați-vă că ați citit şi înțeles instrucțiunile de siguranță în mai multe limbi de pe DVD-ul cu documentație care însoțeşte produsul.

Før du bruker produktet, må du lese og forstå den flerspråklige sikkerhetsinformasjonen på DVDen med dokumentasjon som følger med produktet.

Прежде чем использовать этот продукт, внимательно ознакомьтесь с инструкциями по технике безопасности на разных языках, которые можно найти на DVD-диске с документацией в комплекте с продуктом.

在使用本产品之前，请务必先阅读和了解产品附带的文档 DVD 中的多语言安全说明。

Pre nego to upotrebite proizvod obavezno paljivo proitajte i prouite viejeziko uputstvo za bezbednost na dokumentacionom DVD-u koji ste dobili uz proizvod.

Pred pouvanm produktu si pretajte viacjazyn bezpenostn pokyny na disku DVD s dokumentciou dodanom s produktom.

Preden začnete uporabljati izdelek, je pomembno, da preberete in razumete večjezična varnostna navodila na DVD-ju z dokumentacijo, ki ste ga prejeli skupaj z izdelkom.

Antes de utilizar el producto, asegúrese de leer y comprender las instrucciones de seguridad multilingües del DVD de documentación que se proporciona con el producto.

Var noga med att läsa säkerhetsinstruktionerna på dokumentations-DVD-skivan som följer med produkten innan du börjar använda produkten.

使用本產品之前，請務必閱讀並瞭解產品隨附的文件 DVD 上的多國語言版本安全資訊。

Bu ürünü kullanmadan önce, ürünle birlikte gönderilen belge DVD'si üzerindeki çok dil içeren güvenlik yönergelerini okuyup anladýðýnýzdan emin olun.

Перед використанням цього продукту уважно ознайомтеся з інструкціями з техніки безпеки на різних мовах, що можна знайти на DVD-диску з документацією в комплекті з продуктом.

Important: For translated versions of the caution or danger statement, refer to the *Safety, Warranty, and Support Information* document.

Ensure that you read and understand all caution and danger statements in this document before you perform the procedures. Read and understand any additional safety information that is included with the server or optional device before you install, remove, or replace the device.

Statement 1

DANGER

Electrical current from power, telephone, and communication cables is hazardous.

To avoid a shock hazard:

- **Do not connect or disconnect any cables or perform installation, maintenance, or reconfiguration of this product during an electrical storm.**
- **Connect all power cords to a properly wired and grounded electrical outlet.**
- **Ensure that all power cord connectors are securely and completely plugged into receptacles.**
- **Connect to properly wired outlets any equipment that will be attached to this product.**
- **When possible, use one hand only to connect or disconnect signal cables.**
- **Never turn on any equipment when there is evidence of fire, water, or structural damage.**
- **Disconnect the attached power cords, telecommunications systems, networks, and modems before you open the device covers, unless instructed otherwise in the installation and configuration procedures.**
- **Connect and disconnect cables as described in the following table when installing, moving, or opening covers on this product or attached devices.**

To connect:	**To disconnect:**
1. Turn everything OFF.	1. Turn everything OFF.
2. First, attach all cables to devices.	2. First, remove power cords from outlets.
3. Attach signal cables to connectors.	3. Remove signal cables from connectors.
4. Attach power cords to outlets.	4. Remove all cables from devices.
5. Turn devices ON.	

Statement 2

DANGER

Danger of explosion if battery is incorrectly replaced.

When replacing the lithium coin cell battery, use only the same or an equivalent type that is recommended by the manufacturer. The battery contains lithium and can explode if not properly used, handled, or disposed of.

Do not:

- **Throw or immerse into water**
- **Heat to more than 100°C (212°F)**
- **Repair or disassemble**

Dispose of the battery as required by local ordinances or regulations.

© Copyright Lenovo 2014

Statement 3

CAUTION:
When laser products (such as CD-ROMs, DVD drives, fiber optic devices, or transmitters) are installed, note the following:

- **Do not remove the covers. Removing the covers of the laser product could result in exposure to hazardous laser radiation. There are no serviceable parts inside the device.**
- **Use of controls or adjustments or performance of procedures other than those specified herein might result in hazardous radiation exposure.**

DANGER

Some laser products contain an embedded Class 3A or Class 3B laser diode. Note the following: **Laser radiation when open. Do not stare into the beam, do not view directly with optical instruments, and avoid direct exposure to the beam.**

Statement 4

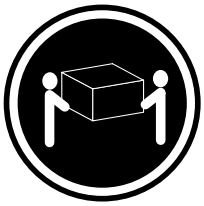

≥ 18 kg (39.7 lb)

< 32 kg (70.5 lb)

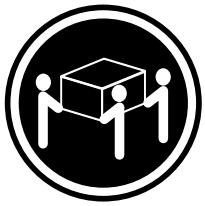

≥ 32 kg (70.5 lb)

< 55 kg (121.2 lb)

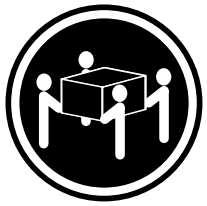

≥ 55 kg (121.2 lb)

< 100 kg (220.5 lb)

CAUTION:
Use safe practices when lifting.

Statement 5

CAUTION:
The power control button on the device and the power switch on the power supply do not turn off the electrical current supplied to the device. The device also might have more than one power cord. To remove all electrical current from the device, ensure that all power cords are disconnected from the power source.

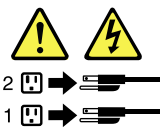

Statement 6

CAUTION:
If you install a strain-relief bracket option over the end of the power cord that is connected to the device, you must connect the other end of the power cord to a power source that is easily accessible in case it needs to be disconnected.

Statement 7

CAUTION:
If the device has doors, ensure that you remove or secure the doors before moving or lifting the device to protect against personal injury. The doors will not support the weight of the device.

Statement 8

CAUTION:
Never remove the cover on a power supply or any part that has the following label attached.

Hazardous voltage, current, and energy levels are present inside any component that has this label attached. There are no serviceable parts inside these components. If you suspect a problem with one of these parts, contact a service technician.

Statement 9

CAUTION:
Disconnect the hot-swap fan cables before removing the fan from the device to protect against personal injury.

Statement 10

CAUTION:
The following label indicates a sharp-edge hazard.

© Copyright Lenovo 2014

Statement 11

CAUTION:
The following label indicates a potential heat hazard.

Statement 12

DANGER

Overloading a branch circuit is a potential fire hazard and a shock hazard under certain conditions. To avoid these hazards, ensure that your system electrical requirements do not exceed branch current ratings at the installation site.

Statement 13

CAUTION:
Ensure that the rack is secured properly to avoid tipping when the server unit is extended on the rails.

Statement 14

CAUTION:
Some accessory or option board outputs exceed Class 2 or limited power source limits. You must install the appropriate interconnecting cabling in accordance with your local electrical code requirements.

Statement 15

CAUTION:
The power-control button on the device may put the device in standby mode instead of turning off the device. In addition, the device might have multiple connections to dc power. To remove all electrical current from the device, ensure that all connections to dc power are disconnected at the dc power input terminals.

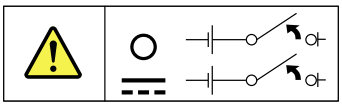

Statement 16

CAUTION:
To reduce the risk of electric shock or energy hazards:

- **This equipment must be installed by trained service personnel in a restricted-access location, as defined by your local electrical code and the latest edition of IEC 60950.**
- **The branch circuit overcurrent protection must be rated in accordance with local electrical code requirements.**
- **Use 1.3 mm^2 or 16 American Wire Gauge (AWG) copper conductor only, not exceeding 3 meters in length.**
- **Torque the wiring-terminal screws to 1.4 newton-meters or 12 inch-pounds.**
- **Provide a readily available, approved and rated disconnect device in the field wiring.**

Statement 17

CAUTION:
This product contains a Class 1M laser. Do not view directly with optical instruments.

Statement 18

CAUTION:
Do not place any object on top of rack-mounted products.

Statement 19

CAUTION:
Hazardous moving parts. Keep fingers and other body parts away.

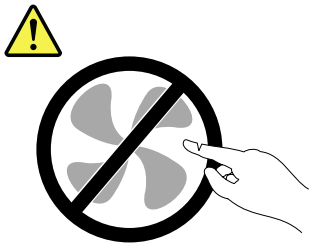

© Copyright Lenovo 2014

Statement 20

CAUTION:
A lithium ion battery is provided. To avoid possible explosion, do not burn the battery. Replace the battery only with the Lenovo-approved part. Recycle or discard the battery as instructed by local regulations.

Products that are not assessed

Typical products that are **not assessed** include but not limited to the following:

- Server and IT-rack components (for example, uninterruptible power supplies and current distribution systems)
- Devices in IT rooms (for example, bulk storage units and network products)
- Industrial low-voltage switchgear

Safety inspection guide

The purpose of this inspection guide is to assist you in identifying potentially unsafe conditions. As each machine was designed and built, required safety items were installed to protect users and service technicians from injury. This guide addresses only those items. You should use good judgment to identify potential safety hazards due to attachment of non-ThinkServer features or options not covered by this inspection guide.

If any unsafe conditions are present, you must determine how serious the apparent hazard could be and whether you can continue without first correcting the problem.

Consider these conditions and the safety hazards they present:

- Electrical hazards, especially primary power (primary voltage on the frame can cause serious or fatal electrical shock)
- Explosive hazards, such as a damaged Cathode Ray Tube (CRT) monitor or a bulging capacitor
- Mechanical hazards, such as loose or missing hardware

To determine whether there are any potentially unsafe conditions, use the following checklist at the beginning of every service task. Begin the checks with the power off, and the power cords disconnected.

Checklist:

1. Check exterior covers for damage (loose, broken, or sharp edges).
2. Power off the server. Disconnect the power cords.
3. Check the power cord for:
   a. A third-wire ground connector in good condition. Use a meter to measure third-wire ground continuity for 0.1 ohm or less between the external ground pin and the frame ground.
   b. The power cord should be the authorized type specified for your server. Go to: http://www.lenovo.com/serviceparts-lookup
   c. Insulation must not be frayed or worn.
4. Check for cracked or bulging batteries.
5. Remove the cover.
6. Check for any obvious non-ThinkServer alterations. Use good judgment as to the safety of any non-ThinkServer alterations.

7. Check inside the unit for any obvious unsafe conditions, such as metal filings, contamination, water or other liquids, or signs of fire or smoke damage.
8. Check for worn, frayed, or pinched cables.
9. Check that the power-supply cover fasteners (screws or rivets) have not been removed or tampered with.

Grounding requirements

Electrical grounding of the server is required for operator safety and correct system function. Proper grounding of the electrical outlet can be verified by a certified electrician.

© Copyright Lenovo 2014

Chapter 1. General information

This chapter provides some general information about your product.

This chapter contains the following items:

- “Introduction” on page 1
- “Server documentation” on page 2

Introduction

This document for your Lenovo® ThinkServer® product contains information about the server features, specifications, component locations, configuration instructions, hardware replacement procedures, and basic troubleshooting and diagnostics.

Your server comes with a documentation DVD that contains various server documents to help you use and maintain the server. Meanwhile, your server comes with the Lenovo ThinkServer Deployment Manager program that provides a convenient solution for configuring the server and installing an operating system.

The Lenovo Limited Warranty (LLW) contains the warranty terms that apply to the product you purchased from Lenovo. Read the LLW on the documentation DVD that comes with your server. A printable generic version of the latest LLW also is available in more than 30 languages at http://www.lenovo.com/warranty/llw_02. If you cannot obtain the LLW through the documentation DVD or Lenovo Web site, contact your local Lenovo office or reseller to obtain a printed version of the LLW, free of charge.

For warranty service, consult the worldwide Lenovo Support telephone list. Telephone numbers are subject to change without notice. The most up-to-date telephone list for Lenovo Support is always available on the Web site at http://www.lenovo.com/support/phone. If the telephone number for your country or region is not listed, contact your Lenovo reseller or Lenovo marketing representative.

To obtain the most up-to-date information about the server, go to:
http://www.lenovo.com/thinkserver

Lenovo maintains pages on the World Wide Web, where you can get the latest technical information and download documentation or device drivers and updates. To access the Lenovo Support Web site, go to:
http://www.lenovo.com/support

© Copyright Lenovo 2014

Record information about your server in the following table. You will need the information if you ever need to have your server serviced.

For where to find the product information label on the chassis, see “Machine type, model, and serial number label” on page 15.

Product name	_____
Machine type and model (MT-M)	_____
Serial number (S/N)	_____
Date of purchase	_____

You can register your server with Lenovo by following the instructions at:
http://www.lenovo.com/register

When you register your server, information is entered into a database, which enables Lenovo to contact you in case of a recall or other severe problem. After you register your server with Lenovo, you will receive quicker service when you call Lenovo for help. In addition, some locations offer extended privileges and services to registered users.

Server documentation

This topic provides a general description of each document for your server and instructions on how to obtain all the documents.

Printed documents

The following documents are printed out and included in your server package.

- *Read Me First*

  This is a multilingual document you should read first. This document guides you to read the complete warranty, support, and safety information on the documentation DVD that comes with your server before using the product. This document also provides information about how to find the most up-to-date information on the Lenovo Support Web site.

- *Rack Installation Instructions*

  This document provides instructions on how to install your server into a standard rack cabinet by using the rail kit shipped with the server.

  Note: A printed English version of this document is included in your server package. PDF versions of other languages are provided on the documentation DVD that comes with the server.

Documentation DVD

The documentation DVD, which comes with your server, contains various documents for your server in Portable Document Format (PDF) and HyperText Markup Language (HTML). The documentation DVD is not bootable. To view the documents on the DVD, you will need a computer with a Web browser and the Adobe Reader program, which is available for download at:
http://www.adobe.com

To start the documentation DVD, insert the DVD into the optical drive. The DVD is AutoPlay enabled and starts automatically in most Microsoft® Windows® environments. If the DVD fails to start or if you are using a Linux® operating system, open the launch.htm file located in the root directory of the DVD.

Note: Lenovo maintains pages on the World Wide Web, where you can get the latest technical information and download documentation or device drivers and updates. Some information in the documents on the documentation DVD might change without notice after the first release of the DVD. You can always obtain all the most up-to-date documentation for your server from the Lenovo Web site at:
http://www.lenovo.com/UserManuals

The following documents are on the documentation DVD that comes with your server:

- *Safety, Warranty, and Support Information*

  This is a multilingual document that includes all the safety statements for your product in more than 30 languages. Be sure to read and understand all the safety statements before using the product. This document also includes the Lenovo warranty statement, Customer Replaceable Units (CRUs) information, and information about how to contact the Lenovo Customer Support Center.

- *Lenovo License Agreement*

  This document includes the terms and conditions of the Lenovo License Agreement.

- *User Guide and Hardware Maintenance Manual*

  This document provides detailed information to help you get familiar with your server and help you use, configure, and maintain your server.

- *Rack Installation Instructions*

  This document provides instructions on how to install your server into a standard rack cabinet by using the rail kit shipped with the server.

- *ThinkServer System Manager User Guide*

  This document provides information about server remote management. This document is in English only. You might find this document on the documentation DVD that comes with your server. If not, download it from the Lenovo Web site at:
  http://www.lenovo.com/UserManuals

  Note: To obtain advanced remote management functions, install a ThinkServer System Manager Premium (TSM Premium) module on the TSM Premium connector on the system board. See “Installing or removing the ThinkServer System Manager Premium module” on page 110.

- *MegaRAID SAS Software User Guide*

  This document provides information about Redundant Array of Independent Disks (RAID) and how to use the utility programs to configure, monitor, and maintain your server RAID and related devices. This document is in English only.

- Other documents

  You might find other documents for the Host Bus Adapter (HBA), Ethernet card, or other optional parts on the documentation DVD.

Chapter 2. Server setup road map

This chapter provides a general road map to guide you through setting up your server.

The server setup procedure varies depending on the configuration of the server when it was delivered. In some cases, the server is fully configured and you just need to connect the server to the network and an ac power source, and then you can turn on the server. In other cases, the server needs to have hardware devices installed, requires hardware and firmware configuration, and requires an operating system to be installed.

The general procedure for setting up your server is:

1. Unpack the server package. See “Server package” on page 7.
2. Install any required hardware or server options. See the related topics in Chapter 6 “Replacing hardware” on page 59.
3. If necessary, install the server into a standard rack cabinet by using the rail kit shipped with the server. See the *Rack Installation Instructions* that comes with the server.
4. Connect the Ethernet cables and power cords to the server. See “Rear view of the server” on page 23 to locate the connectors.
5. Turn on the server to verify operation. See “Turning on the server” on page 45.
6. Review the Basic Input Output System (BIOS) settings and customize as needed. See “Using the Setup Utility program” on page 47.
7. Configure RAID and install the operating system and device drivers. See “Lenovo ThinkServer Deployment Manager” on page 13 and “Configuring RAID” on page 54.
8. Install any additional drivers required for added features. Refer to the instructions that come with the hardware option.
9. Configure Ethernet settings in the operating system by referring to the operating system help. This step is not required if the operating system was installed using the Lenovo ThinkServer Deployment Manager program.
10. Check for firmware updates. See “Updating the firmware” on page 57.
11. Install management applications and any other applications. Refer to the documentation that comes with the applications that you want to install.

© Copyright Lenovo 2014

Chapter 3. Product overview

This chapter provides information about the server package, features, specifications, software programs, and component locations.

This chapter contains the following items:

- “Server package” on page 7
- “Features” on page 7
- “Specifications” on page 12
- “Software” on page 12
- “Locations” on page 15

Server package

The server package includes the following items:

- Server
- Rail kit (available on some models)
- Cable management arm or cable management bar (available on some models)
- Slim optical drive (available on some models)
- Material box, including items such as power cords, printed documentation, and a documentation DVD

Features

This topic provides general information about the server features for a variety of models. Depending on your specific model, some features might vary or unavailable. For information about your specific model, use the Setup Utility program. See “Viewing information in the Setup Utility program” on page 47. You also can refer to the *Product Specifications Reference* document for ThinkServer products at:
http://www.lenovo.com/psref/

Microprocessor

One or two Intel® Xeon® microprocessors (internal cache size varies by model)

For a list of the ThinkServer microprocessor options, go to:
http://lenovoquickpick.com/usa/home/thinkserver/rack-and-tower-server

Memory

Your server has 16 memory slots. For more information, see “Memory module installation rules” on page 70.

© Copyright Lenovo 2014

Power supply

- One or two 450-watt hot-swap redundant power supplies (Universal input and compliant with 80 PLUS Gold)

  The 450-watt hot-swap redundant power supplies are not Energy Star 2.0 compliant. For information about Energy Star, see “ENERGY STAR model information” on page 186.
- One or two 550-watt hot-swap redundant power supplies (Universal input and compliant with 80 PLUS Platinum)
- One or two 750-watt hot-swap redundant power supplies (Universal input and compliant with 80 PLUS Platinum)
- One or two 750-watt hot-swap redundant power supplies (High line input and compliant with 80 PLUS Titanium)
- One or two 1100-watt hot-swap redundant power supplies (Universal input and compliant with 80 PLUS Platinum)

System fans

Your server supports up to four non-hot-swap system fans with redundancy. This design helps you avoid significant cooling problems when a system fan fails. To locate the system fans, see “System board components” on page 38.

- If your server is installed with one microprocessor, three system fans (fan 1 to fan 3) are adequate to provide proper cooling. However, you must keep the location for fan 4 occupied by a dummy fan to ensure proper airflow.
- If your server is installed with two microprocessors, ensure that all the four system fans are installed to avoid cooling problems.

Internal drives

Internal drives are devices that your server uses to read and store data. The internal drives supported by your server vary by model.

- Internal storage drive

  Your server supports one of the following storage drive configurations:

Drive bay size	Drive bay quantity	Drive type
3.5-inch	8	Hot-swap, SATA or SAS 3.5-inch hard disk drive or 2.5-inch solid-state drive
2.5-inch	24	Hot-swap, SATA or SAS Hard disk drive or solid-state drive

  Note: You can install a 2.5-inch solid-state drive into a 3.5-inch-drive bay. For more information, see “Installing a 2.5-inch solid-state drive into a 3.5-inch-drive bay” on page 134.

  Notes:

  – SATA is the acronym for Serial Advanced Technology Attachment.

  – SAS stands for Serial Attached SCSI (SCSI is the acronym for Small Computer System Interface).

  – You can install SATA hard disk drives, SAS hard disk drives, and solid-state drives into the same server.

- Optical drive
  - One slim SATA optical drive in some models
- Tape drive
  - One internal tape drive in some models

Expansion slots

- Two riser card assembly slots on the system board
- One PCI Express (PCIe) slot on system board
- Three or two PCIe slots on the riser card

For detailed information, see “Rear view of the server” on page 23.

Input/Output (I/O) features

- On the rear panel:
  - One video graphics array (VGA) connector
  - One serial connector
  - Two USB 3.0 connectors
  - Three RJ-45 Ethernet connectors
- On the front panel:
  - One DisplayPort® connector
  - Two USB 2.0 connectors

  Note: If you want to connect a video graphics array (VGA) monitor to the DisplayPort connector on the front panel, it is recommended that you purchase a compatible DisplayPort to VGA adapter from Lenovo.

To locate the connectors, refer to the related topics in “Locations” on page 15.

Video subsystem

An integrated graphics controller is available in your server to support the VGA connector and the DisplayPort connector for connecting video devices. The integrated graphics controller is located in the Baseboard Management Controller (BMC) chip on the system board.

- Integrated graphics controller: On-board ASPEED AST2400
- 16 MB of video memory cache

Ethernet connectivity

There are three RJ-45 Ethernet connectors on the rear panel with 10 megabits per second (Mbps), 100 Mbps, or 1000 Mbps network connectivity. One of the Ethernet connectors is for system management. To locate the Ethernet connectors, see “Rear view of the server” on page 23.

You can install an Ethernet card to enable more Ethernet connectors. However, you must install a device driver to enable the operating system to recognize the Ethernet connectors. The device drivers are available for download at:
http://www.lenovo.com/drivers

Reliability, availability, and serviceability

Reliability, availability, and serviceability (hereinafter referred to as RAS) are three important server design features. The RAS features help you ensure the integrity of the data stored on the server, the availability of the server when you need it, and the ease with which you can diagnose and correct problems.

Your server has the following RAS features:

- **Security features**
  - Administrator password and user password to help protect unauthorized access to the server (see “Using passwords” on page 50)
  - ThinkServer Trusted Platform Module (TPM), which is a security chip, to help enhance server security

    Note: The TPM is available only in some models.
  - Remote monitoring or control by an administrator to provide protection or help
  - Hot-swap redundant power supplies to help avoid significant interruption to the operation of the system when a power supply fails
  - An intrusion switch that informs you that the server cover is not properly installed or closed by creating an event in the system event log (SEL)
- **Basic system management features**
  - Ability to store the power-on self-test (POST) hardware test results
  - BIOS Setup Utility program

    The BIOS Setup Utility program helps you view the server information and configure the server in the pre-operating system environment. See “Using the Setup Utility program” on page 47.
  - TSM (also known as BMC) and Intelligent Platform Management Interface (IPMI) 2.0

    The system board platform management subsystem is based on the integrated TSM features. The TSM is a management chip that is integrated on the system board of your server. With the TSM, no matter what condition the server operating system is in and no matter if the server is on or off, as long as the server is connected to network and an ac power source, the interaction with the TSM-controlled servers can be achieved through system network. The user can obtain the server hardware health information and system event log (SEL), and is able to conduct the operations including turning on or off the server, restarting the server, and so on. This part of server management is independent of the operating system and is called out-of-band management.

    The system board platform management subsystem consists of the integrated TSM, communication buses, sensors, the BIOS, and server management firmware. It is responsible for error reporting, system power control, thermal monitoring, system fan control, and other management features. The TSM provides system management and monitoring features based on the IPMI 2.0 specification. IPMI helps lower the overall costs of server management. You can find more information about IPMI 2.0 from the Web site of Intel. The TSM also supports some non-IPMI features, such as the Dynamic Host Configuration Protocol (DHCP) and the Platform Environment Control Interface (PECI), to provide more system management functions.

    You can find the default user name, password, and other information for the TSM in the *ThinkServer System Manager User Guide*, which is available for download at:
    http://www.lenovo.com/UserManuals
  - Hot-swap feature

    Your server supports hot-swap storage drives (including hard disk drives and solid-state drives) and hot-swap redundant power supplies. With the hot-swap feature, you can install, remove, or replace a hot-swap device without turning off the server.

- Preboot Execution Environment (PXE)

  The Intel PXE technology enables you to boot your servers, load an operating system, or deploy executable images from a remote server by using a network interface. The operation can be done independently of local data storage devices (such as hard disk drives) or operating systems.

- Redundant Array of Independent Disks (RAID)

  Your server supports advanced SATA/SAS hardware RAID if your server has a required RAID card or an AnyRAID adapter installed. For detailed information, see “Configuring RAID” on page 54.

- Status light-emitting diodes (LEDs) and diagnostic LEDs

  For more information about the LEDs for your server, refer to the related topics in “Locations” on page 15.

- Software programs

  For more information about the software programs, see “Software” on page 12.

- Wake on LAN

  When the Wake on LAN feature is enabled on a server that is connected to a LAN, a network administrator can remotely turn on or wake up the server from a management console using remote network management software. Besides, many other functions, such as data transfer and software updates, can be performed remotely without remote attendance and can be done after normal working hours and on weekends to save time and increase productivity.

- **Advanced system management features**

  The advanced system management features are only available when the TSM detects the presence of a TSM premium module. The TSM premium module is a remote management module. You can purchase a TSM premium module from Lenovo and install it on the system board to activate the advanced system management features.

  For more information about advanced system management, refer to the *ThinkServer System Manager User Guide*, which is available for download at:
  http://www.lenovo.com/UserManuals

Specifications

This topic lists the physical specifications for your server.

Dimensions

Width without rack handles: 447 mm (17.6 inches)

Width with rack handles: 482 mm (18.98 inches)

Depth without rack handles and power supply handles: 764 mm (29.37 inches)

Depth with rack handles and power supply handles: 782.9 mm (30.82 inches)

Height: 87 mm (3.43 inches)

Weight

The product weight varies depending on different system configurations.

Range of product weight without package: 16 kg (35.27 lb) to 27 kg (59.52 lb)

Range of product weight with package: 24.7 kg (54.45 lb) to 35.7 kg (78.71 lb)

Environment

- Air temperature:

  Operating: 10°C to 35°C (50°F to 95°F)

  Storage: -40°C to 70°C (-40°F to 158°F) in original shipping package
- Altitude: 0 to 3048 m (0 to 10 000 ft) in an unpressurized environment

  Note: When the altitude exceeds 950 m (3117 ft), the defined maximum dry-bulb temperature for operation becomes a dependent variable. This temperature value decreases by 1°C (33.8°F) with every 300 m (984 ft) of altitude increase.
- Humidity:

  Operating: 20% to 80% (non-condensing)

  Storage without package: 8% to 90% (non-condensing)

  Storage with package: 8% to 90% (non-condensing)

Electrical input

- Universal input:
  - Low range:

    Minimum: 100 V ac

    Maximum: 127 V ac

    Input frequency range: 50 to 60 Hz
  - High range:

    Minimum: 200 V ac

    Maximum: 240 V ac

    Input frequency range: 50 to 60 Hz

Software

This topic provides information about the software programs that you can use to set up, use, and maintain the server.

To download the software programs, go to the Lenovo Support Web site at http://www.lenovo.com/support and follow the instructions on the Web page.

Some of the software programs have an electronic user guide. You might find the user guide on the documentation DVD that comes with your server. If not, download the user guide from the Lenovo Web site at:
http://www.lenovo.com/UserManuals

BIOS and TSM update utilities

The BIOS and TSM (also known as BMC) firmware keeps updating after the shipment of the server. Lenovo maintains pages on the Support Web site and provides the BIOS and TSM update utilities with instructions for download to help you update the BIOS and TSM firmware if needed. For more information, see “Updating or recovering the BIOS” on page 53 and “Updating the firmware” on page 57.

Lenovo Partner Pack for Microsoft System Center Operations Management

The Lenovo Partner Pack for Microsoft System Center Operations Management program automatically detects the managed servers of your ThinkServer server and provides detailed system information about the managed servers. The system information includes component inventory, component status, and sensor status. The program also enables users to perform management tasks, such as restarting or turning off your ThinkServer server, launching a remote console, and accessing the TSM interface.

For detailed information about using the program, refer to the help system of the program.

Lenovo Partner Pack for vSphere vCenter Server

The Lenovo Partner Pack for vSphere vCenter Server program provides detailed system information about the managed servers of your ThinkServer server in the VMware virtualized environment. The system information includes the inventory and status of components such as microprocessors, memory modules, fans, and temperature sensors. The program also enables users to perform tasks such as launching a remote console and accessing the TSM interface.

For detailed information about using the program, refer to the help system of the program.

Lenovo ThinkServer Deployment Manager

The Lenovo ThinkServer Deployment Manager program (hereinafter referred to as Deployment Manager) simplifies the process of configuring RAID, configuring BIOS settings, and updating the firmware. The program works in conjunction with your Windows or Linux operating system installation disc to automate the process of installing the operating system and associated device drivers. The program is part of the server firmware. The help system for the program can be accessed directly from the program interface.

Deployment Manager has the following features:

- Easy-to-use, language-selectable interface
- Integrated help system
- Automatic hardware detection
- Selectable partition size and file system type
- Ability to install the operating system and device drivers in an unattended mode to save time
- Ability to create a reusable response file that can be used with similarly configured Lenovo servers to make future installations even faster
- Contains RAID configuration utility
- Provides device drivers based on the server model and detected devices
- Supports BIOS settings configuration

- Supports firmware and applications update

To use Deployment Manager, do the following:

1. Launch the program through one of the following methods:
   - Turn on the server. Press F10 as soon as you see the logo screen. Then, wait for several seconds. Deployment Manager opens.
   - Start the Setup Utility program. Select **Boot Manager → Launch TDM**. Deployment Manager opens.
2. Read and accept the license agreement.
3. Select the language in which you want to view the program. Then, follow the instructions on the screen to use the program.

Before installing a Windows or a Linux operating system using Deployment Manager, it is recommended that you do the following:

1. Download the latest device driver bundle file for your server. To find and download the bundle file, go to http://www.lenovo.com/drivers and follow the instructions on the Web page.
2. Launch Deployment Manager and click **Platform Update** on the left pane.
3. Select **Application** and then click **Next**.
4. Click **Browse** to select the corresponding bundle file and then click **OK**. The version information is displayed.
5. Click **Flash** to apply the bundle file and update the current device drivers.

Note: If you want to install a VMware hypervisor using Deployment Manager, the device driver bundle file is not needed.

To download the latest Deployment Manager, go to http://www.lenovo.com/drivers and follow the instructions on the Web page.

Lenovo ThinkServer Diagnostics

The Lenovo ThinkServer Diagnostics program enables you to diagnose server problems, perform some diagnostic tests, and collect system information. Examples of the system information include basic operating-system information, hardware information, SEL, RAID log, and so on. Depending on the model, your server might come with one of the following diagnostic programs:

- Lenovo Thinkserver Diagnostics Linux Edition
- Lenovo Thinkserver Diagnostics Standalone Edition
- Lenovo Thinkserver Diagnostics Windows Edition

For detailed information about using the Lenovo ThinkServer Diagnostics program, refer to the help system for the program.

Lenovo ThinkServer Energy Manager

The Lenovo ThinkServer Energy Manager is a tool for data center power management. It monitors the power and temperature at the device level and the group level. By monitoring and analyzing power and temperature information, Energy Manager helps you to increase power efficiency and improve business continuity.

For information about using Energy Manager, refer to the help system of the program.

Lenovo ThinkServer Operating System-based Platform Update Tool

The Lenovo ThinkServer Operating System-based Platform Update Tool is used to update the firmware in the operating system for your server.

For detailed information about using the program, refer to the help system of the program.

Lenovo ThinkServer Power Planner

The Lenovo ThinkServer Power Planner program provides information about data maintenance, power consumption, electric current calculations, and so on. The program helps you conveniently manage servers and devices to increase the deployment efficiency significantly.

For detailed information about using the Lenovo ThinkServer Power Planner program, refer to the help system of the program.

Lenovo ThinkServer System Manager

The Lenovo ThinkServer System Manager (TSM) is a management solution that provides comprehensive and secure management features. These features enable you to manage your servers remotely using a one-to-one or one-to-many method.

The TSM provides a one-to-one web-based console. The web-based console is developed in HTML 5 and structured in the way that makes platform management intuitive and efficient. The TSM also provides a secure command-line interface for improved efficiency and functionality.

For detailed information about using the Lenovo ThinkServer System Manager program, refer to the help system of the program.

Lenovo ThinkServer System Manager Premium

Lenovo ThinkServer System Manager Premium provides you a solution that enables you to receive all the benefits and features provided by both the Lenovo ThinkServer System Manager program and the Lenovo ThinkServer Energy Manager program. It also enables you to control the server remotely using Lenovo virtual keyboard, video, and mouse.

For detailed information about using the program, refer to the help system of the program.

Locations

This topic provides information to help you locate your server components.

Machine type, model, and serial number label

This topic helps you to locate the label that contains the machine type, model, and serial number information for your server.

When you contact Lenovo for help, the machine type, model, and serial number information helps support technicians to identify your server and provide faster service.

The following illustrations are examples of the machine type, model, and serial number labels on server models with different drive bay configurations.

Note: Depending on the model, your server might look slightly different from the illustrations in this topic.

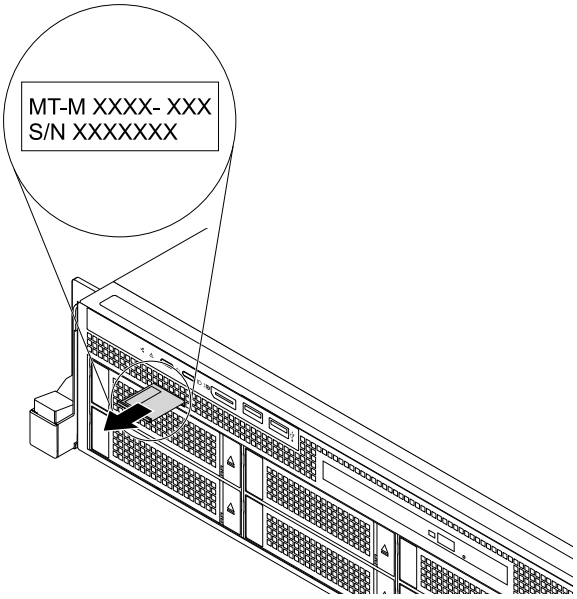

Figure 1. Label on server models with 3.5-inch-drive bays

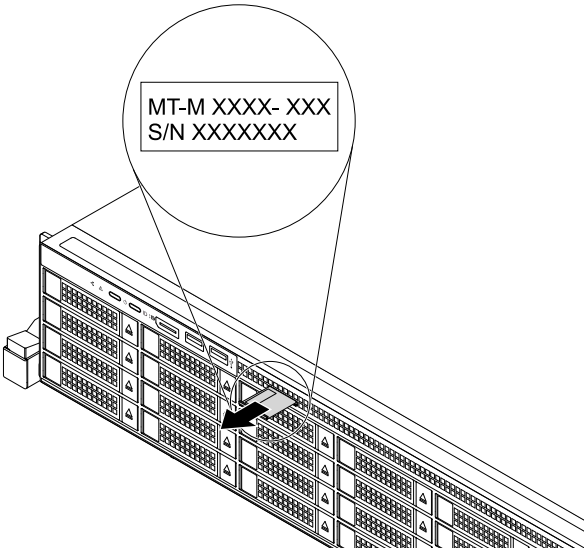

Figure 2. Label on server models with 2.5-inch-drive bays

Front view of the server

The front view of the server varies by model. The illustrations in this topic show the server front views based on the supported internal drives:

- "Front view of server models with 3.5-inch drives" on page 17

- “Front view of server models with 2.5-inch drives” on page 18
- “Front view of server models with 2.5-inch drives and a slim optical drive” on page 19
- “Front view of server models with an internal tape drive” on page 20

Note: Depending on the model, your server might look slightly different from the illustrations in this topic.

Front view of server models with 3.5-inch drives

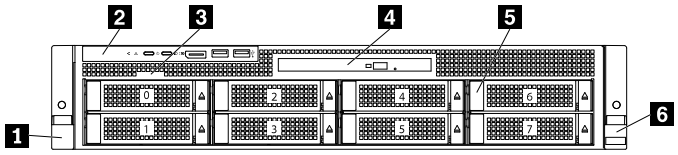

Figure 3. Front view of server models with 3.5-inch drives

1 Rack handle (left)	2 Front panel
3 Pull-out information card	4 Slim optical drive (available on some models)
5 3.5-inch-drive bays (0–7)	6 Rack handle (right)

1 6 Rack handles

If your server is installed in a rack cabinet, you can use the rack handles to help you slide the server out of the rack cabinet. You also can use the rack handles and screws to secure the server in the rack cabinet so that the server cannot slide out, especially in vibration-prone areas. For more information, refer to the *Rack Installation Instructions* that comes with your server.

2 Front panel

For information about the controls, connectors, and status LEDs on the front panel, see “Front panel” on page 21.

3 Pull-out information card

The machine type, model, and serial number label of the server is attached on the pull-out information card. See “Machine type, model, and serial number label” on page 15.

4 Slim optical drive

Some server models come with a slim SATA optical drive (DVD-RW or DVD-ROM).

5 3.5-inch-drive bays (0–7)

The EMI integrity and cooling of the server are protected by having all drive bays covered or occupied. The number of the installed drives in your server varies by model. The vacant drive bays are occupied by dummy trays.

When you install drives, follow the order of the drive bay numbers.

Front view of server models with 2.5-inch drives

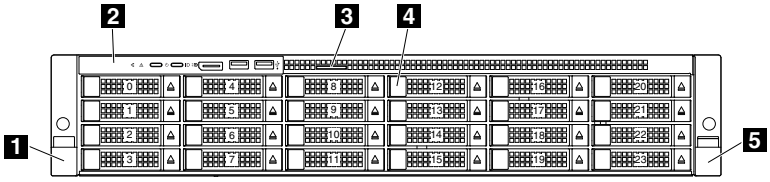

Figure 4. Front view of server models with 2.5-inch drives

1 Rack handle (left)	2 Front panel
3 Pull-out information card	4 2.5-inch-drive bays (0–23)
5 Rack handle (right)	

1 5 Rack handles

If your server is installed in a rack cabinet, you can use the rack handles to help you slide the server out of the rack cabinet. You also can use the rack handles and screws to secure the server in the rack cabinet so that the server cannot slide out, especially in vibration-prone areas. For more information, refer to the *Rack Installation Instructions* that comes with your server.

2 Front panel

For information about the controls, connectors, and status LEDs on the front panel, see “Front panel” on page 21.

3 Pull-out information card

The machine type, model, and serial number label of the server is attached on the pull-out information card. See “Machine type, model, and serial number label” on page 15.

4 2.5-inch-drive bays (0–23)

The EMI integrity and cooling of the server are protected by having all drive bays covered or occupied. The number of the installed drives in your server varies by model. The vacant drive bays are occupied by dummy trays.

When you install drives, follow the order of the drive bay numbers.

Depending on your server model, all or some of the drive-bay groups, such as bays 0–7, bays 8–15, and bays 16–23, might be covered by EMI-protective panels as a whole.

Front view of server models with 2.5-inch drives and a slim optical drive

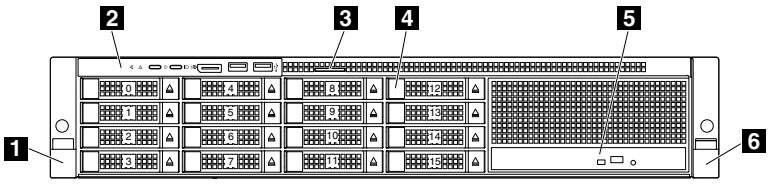

Figure 5. Front view of server models with 2.5-inch drives and a slim optical drive

1 Rack handle (left)	**2** Front panel
3 Pull-out information card	**4** 2.5-inch-drive bays (0–15)
5 Slim optical drive (available on some models)	**6** Rack handle (right)

1 6 Rack handles

If your server is installed in a rack cabinet, you can use the rack handles to help you slide the server out of the rack cabinet. You also can use the rack handles and screws to secure the server in the rack cabinet so that the server cannot slide out, especially in vibration-prone areas. For more information, refer to the *Rack Installation Instructions* that comes with your server.

2 Front panel

For information about the controls, connectors, and status LEDs on the front panel, see “Front panel” on page 21.

3 Pull-out information card

The machine type, model, and serial number label of the server is attached on the pull-out information card. See “Machine type, model, and serial number label” on page 15.

4 2.5-inch-drive bays (0–15)

The EMI integrity and cooling of the server are protected by having all drive bays covered or occupied. The number of the installed drives in your server varies by model. The vacant drive bays are occupied by dummy trays.

When you install drives, follow the order of the drive bay numbers.

If the server supports up to eight drives, an EMI-protective panel covers the bays 8–15 as a whole.

5 Slim optical drive

Some server models come with a slim SATA optical drive (DVD-RW or DVD-ROM).

Front view of server models with an internal tape drive

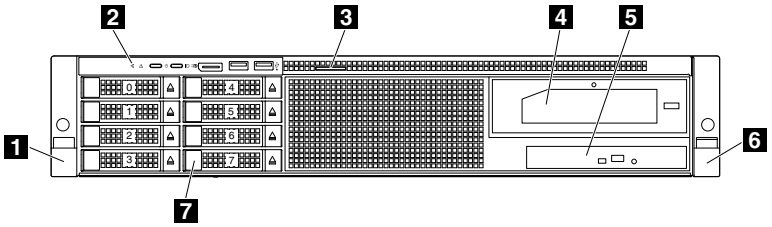

Figure 6. Front view of server models with an internal tape drive

1 Rack handle (left)	2 Front panel
3 Pull-out information card	4 Internal tape drive (available on some models)
5 Slim optical drive (available on some models)	6 Rack handle (right)
7 2.5-inch-drive bays (0–7)	

1 6 Rack handles

If your server is installed in a rack cabinet, you can use the rack handles to help you slide the server out of the rack cabinet. You also can use the rack handles and screws to secure the server in the rack cabinet so that the server cannot slide out, especially in vibration-prone areas. For more information, refer to the *Rack Installation Instructions* that comes with your server.

2 Front panel

For information about the controls, connectors, and status LEDs on the front panel, see “Front panel” on page 21.

3 Pull-out information card

The machine type, model, and serial number label of the server is attached on the pull-out information card. See “Machine type, model, and serial number label” on page 15.

4 Internal tape drive

Some server models come with an internal tape drive. The internal tape drive enables you to store data on tapes.

5 Slim optical drive

Some server models come with a slim SATA optical drive (DVD-RW or DVD-ROM).

7 2.5-inch-drive bays (0–7)

The EMI integrity and cooling of the server are protected by having all drive bays covered or occupied. The number of the installed drives in your server varies by model. The vacant drive bays are occupied by dummy trays.

When you install drives, follow the order of the drive bay numbers.

Front panel

The following illustration shows the controls, connectors, and LEDs on the front panel of the server. To locate the front panel, see “Front view of the server” on page 16.

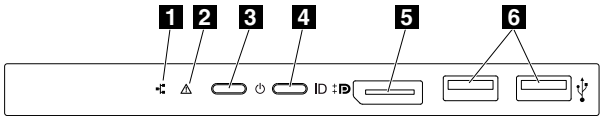

Figure 7. Front panel

1 Network status LED	2 System health LED
3 Power button with power status LED	4 System ID button with ID LED
5 DisplayPort connector	6 USB 2.0 connectors (2)

1 Network status LED

The network status LED on the front panel helps you identify the network connectivity and activity.

Status	Color	Description
On	Green	The server is connected to a network.
Blinking	Green	The network is connected and active.
Off	None	The server is disconnected from the network.

2 System health LED

The system health LED provides basic diagnostic functions for your server. If the system health LED is lit, one or more LEDs elsewhere in the server might also be lit to direct you to the source of the error.

Status	Color	Description	Action
On	Amber	The temperature of the server reached the non-critical temperature threshold.	Check the BMC for errors and check the system fans.
		The voltage of the server reached the non-critical voltage threshold.	Replace the system board. **Note:** This procedure must be performed only by trained service personnel of Lenovo. See Chapter 8 “Getting information, help, and service” on page 175.
		A fan has been detected to be running at low speed.	Check the system fans.
		A fan has been removed.	1. Ensure that the system fans are connected securely to the system board. 2. Reinstall the removed fan or install a new fan to replace the removed fan.
		The power supply has a critical error.	Check the BMC for detailed information.
		The power cord has been disconnected from one power supply or a redundant power supply has been removed.	1. Ensure that the power supplies are installed securely in the server. 2. Ensure that the power cords are connected securely to the power supplies. 3. Install a new power supply to replace the removed one.
		The server is overheated.	Check the BMC for errors and then check the system fans.
Blinking	Amber	The BMC is initializing.	
Off	None	The server is off or the server is on and is working correctly.	

3 Power button with power status LED

You can press the power button to turn on the server when you finish setting up the server. You also can hold the power button for several seconds to turn off the server if you cannot turn off the server from the operating system. See Chapter 4 “Turning on and turning off the server” on page 45. The power status LED helps you to determine the current power status.

Status	Color	Description
On	Green	The server is on.
Off	None	The server is off.

4 System ID button with ID LED

When you press the ID button on the front panel, the ID LEDs on both the front and rear of the server are lit to help you locate the server among other servers. You also can turn on the ID LEDs using a remote management program for server presence detection.

Status	Color	Description
On	Blue	The server is identified.
Off	None	The ID LED is not in use or the server is not identified.

5 DisplayPort connector

Used to attach a high-performance monitor, a direct-drive monitor, or other devices that use a DisplayPort connector.

6 Front USB 2.0 connectors (2)

Used to attach a USB-compatible device, such as a USB keyboard, mouse, scanner, or printer. If you have more than six USB devices, you can purchase a USB hub, which you can use to connect additional USB devices.

Rear view of the server

This topic provides information to help you locate the connectors and components on the rear of your server.

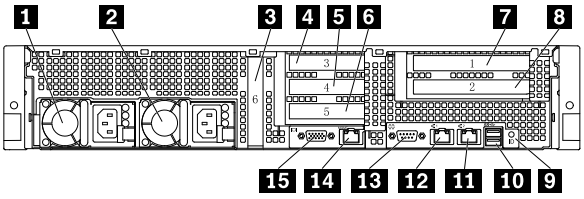

Figure 8. Rear view of the server

1 Power supply 1	2 Power supply 2 (available on some models)
3 PCIe slot 6	4 PCIe slot 3 (on riser card assembly 2)
5 PCIe slot 4 (on riser card assembly 2)	6 PCIe slot 5 (on riser card assembly 2)
7 PCIe slot 1 (on riser card assembly 1)	8 PCIe slot 2 (on riser card assembly 1)
9 System ID LED	10 USB 3.0 connectors (2)
11 Ethernet connector 2 (RJ-45)	12 Ethernet connector 1 (RJ-45)
13 Serial connector	14 Ethernet connector for system management (RJ-45)
15 VGA connector	

1 Power supply 1

2 Power supply 2 (available on some models)

The hot-swap redundant power supplies help you avoid significant interruption to the operation of the system when a power supply fails. You can purchase a power supply option from Lenovo and install the power supply to provide power redundancy without turning off the server.

On each power supply, there are three status LEDs near the power cord connector. For information about the status LEDs, see “Power supply status LEDs” on page 44.

3 PCIe slots on the system board

Slot	Physical link width	Negotiable link width	Supported card length and height
3 PCIe slot 6	x16	x8, x4, x2, x1	Low-profile card

4 5 6 PCIe slots on riser card assembly 2

Slot	Physical link width	Negotiable link width	Supported card length and height
4 PCIe slot 3	x16	x8, x4, x2, x1	Low-profile card
5 PCIe slot 4	x16	x8, x4, x2, x1	Low-profile card
6 PCIe slot 5	x16	x8, x4, x2, x1	Low-profile card

7 8 PCIe slots on riser card assembly 1

Slot	Physical link width	Negotiable link width	Supported card length and height
7 PCIe slot 1	x16	x8, x4, x2, x1	Half-length, full-height card
8 PCIe slot 2	x16	x8, x4, x2, x1	Half-length, full-height card

Note: If your server is installed with only one microprocessor, only PCIe slots 1 and 2 are available.

9 System ID LED

When you press the ID button on the front panel, the ID LEDs on both the front and rear of the server are lit to help you locate the server among other servers. You also can turn on the ID LEDs using a remote management program for server presence detection.

Status	Color	Description
On	Blue	The server is identified.
Off	None	The ID LED is not in use or the server is not identified.

10 USB 3.0 connectors (2)

Used to attach a device that requires a USB 2.0 or 3.0 connection, such as a keyboard, a mouse, a scanner, a printer, or a personal digital assistant (PDA).

11 12 14 Ethernet RJ-45 connectors

Used to attach an Ethernet cable for a LAN. Each Ethernet connector has two status LEDs to help you identify the Ethernet connectivity, activity, and connection speed.

The Ethernet connector 0 (14) marked with “MGMT” is for system management by default. If you want to use remote management functions, connect an Ethernet cable to the Ethernet connector 0. You also can set the Ethernet connector 1 for system management. See “Setting an Ethernet connector for system management” on page 52.

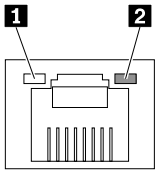

Figure 9. Ethernet status LEDs

Ethernet status LED	Color	Status	Description
1 Left: data speed	Amber	On	The connection speed is 1000 Mbps.
	Green	On	The connection speed is 100 Mbps.
	None	Off	The connection speed is 10 Mbps.
2 Right: link and activity	Green	On	The server is connected to a LAN.
	None	Off	The server is disconnected from a LAN.
	Green	Blinking	The LAN is connected and active.

13 Serial connector

Used to attach a device that uses a 9-pin serial connector.

15 VGA connector

Used to attach a VGA-compatible video device, such as a VGA monitor.

Server components

This topic provides information to help you locate the components of your server. For more information about major components, see the related topics in “Locations” on page 15.

To remove the server cover and gain access to the inside of the server, see “Removing the server cover” on page 61.

The following illustration shows the components of server models with an internal tape drive and a slim optical drive.

Note: Depending on the model, your server might look slightly different from the illustration in this topic.

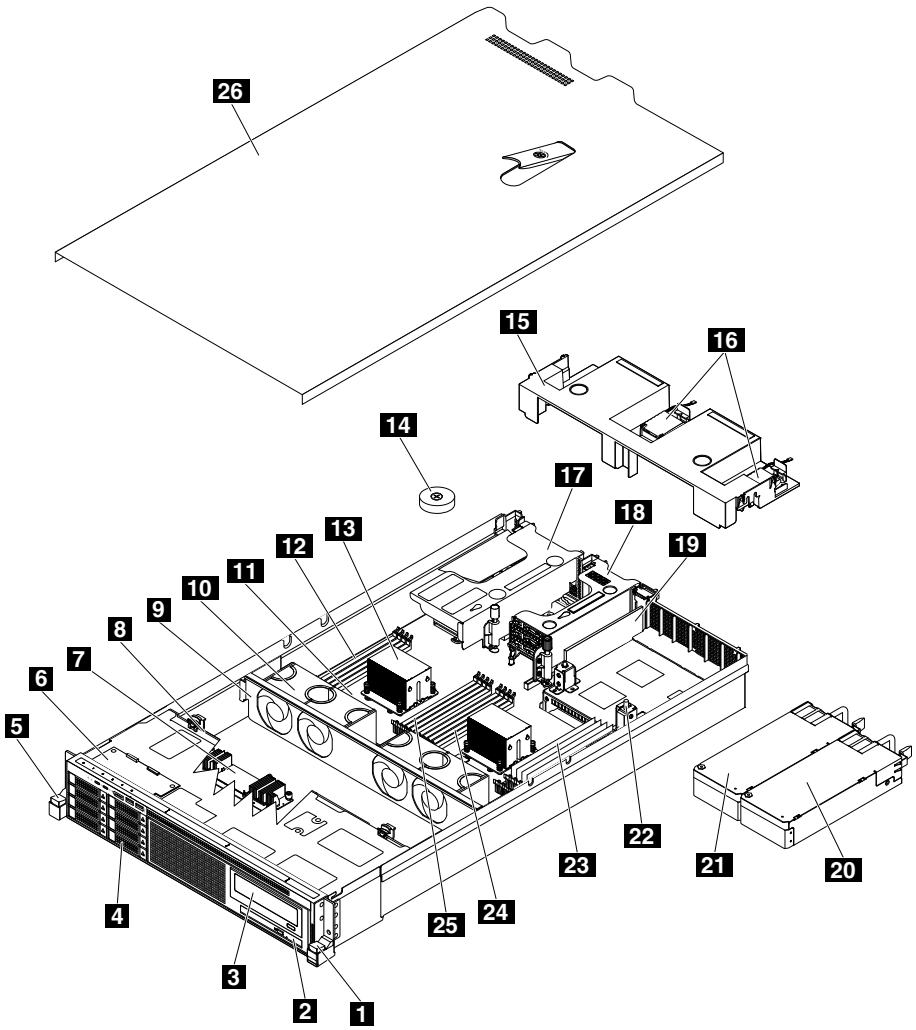

Figure 10. Components of server models with an internal tape drive and a slim optical drive

1 Rack handle (right)	2 Slim optical drive (available on some models)
3 Internal tape drive (available on some models)	4 2.5-inch-drive area
5 Rack handle (left)	6 Front panel board
7 AnyRAID adapter (available on some models)	8 Hot-swap-drive backplane
9 System fan cage	10 System fan
11 System board	12 CPU1 DIMMs (vary by model)
13 Heat sink	14 Coin-cell battery
15 Cooling shroud	16 ThinkServer RAID Super Capacitor Module (available on some models)
17 Riser card assembly 1	18 Riser card assembly 2

19 PCIe card (available on some models)	20 Power supply 1
21 Power supply 2 (available on some models)	22 Intrusion switch (available on some models)
23 CPU2 DIMMs (vary by model)	24 CPU2 DIMMs (vary by model)
25 CPU1 DIMMs (vary by model)	26 Server cover

CRUs are parts that can be upgraded or replaced by the customer. If a CRU is determined to be defective during the warranty period, a replacement CRU will be provided to the customer. Customers are responsible for installing the self-service CRUs for this product. Customers also can install optional-service CRUs, which might require some technical skills or tools, or request that a technician install the optional-service CRU under the terms of the applicable warranty service type for your country or region.

Non-CRUs must be replaced only by trained service technicians.

The following table lists the major FRUs in your server and the CRU identification information. For a complete listing of FRU information, such as FRU part numbers and supported server models, go to: http://www.lenovo.com/serviceparts-lookup

Notes:

- Before servicing a Lenovo product, ensure that you read and understand “Safety information” on page iii.
- Use only parts provided by Lenovo.

* Available on some models

FRU description	Self-service CRU	Optional-service CRU
AnyRAID adapter*	No	Yes
AnyRAID flash module*	Yes	No
Coin-cell battery	Yes	No
Cooling shroud	Yes	No
Front panel board	Yes	No
Heat sink	Yes	No
Hot-swap-drive backplane	No	Yes
Hot-swap storage drive	Yes	No
Hot-swap redundant power supply	Yes	No
Internal tape drive*	Yes	No
Intrusion switch*	Yes	No
Lenovo ThinkServer RAID 500 upgrade key*	Yes	No
Lenovo ThinkServer RAID 110i upgrade key*	No	Yes
Lenovo ThinkServer RAID 510i upgrade key*	Yes	No
Memory module	Yes	No
Microprocessor	No	Yes
Optical drive*	Yes	No
Optical module*	Yes	No
PCIe card*	Yes	No
Power cord	Yes	No
Riser card	Yes	No

FRU description	Self-service CRU	Optional-service CRU
Secure digital (SD) card*	Yes	No
SD module*	No	Yes
System board	No	No
System fan	Yes	No
System fan cage	Yes	No
ThinkServer RAID Super Capacitor Module*	Yes	No
ThinkServer System Manager Premium module*	Yes	No
ThinkServer Trusted Platform Module*	Yes	No

AnyRAID adapter and RAID card

This topic provides information about the connectors on the AnyRAID adapter and RAID card. You can purchase a supported AnyRAID adapter and RAID card from Lenovo and install it into the server. For a list of ThinkServer options, go to:
http://lenovoquickpick.com/usa/home/thinkserver/rack-and-tower-server

Note: The option kit for AnyRAID adapter or RAID card is designed for different types of servers and might contain additional cables that are not required for your server.

You server also supports the Host Bus Adapter. The Host Bus Adapter is used to connect your server to external storage devices, such as a storage array.

Your server supports the following AnyRAID adapters and RAID cards:

AnyRAID adapters (supported type varies by server model):

- Lenovo ThinkServer RAID 110i AnyRAID Adapter (also called pass-through board)
- Lenovo ThinkServer RAID 510i AnyRAID Adapter
- Lenovo ThinkServer RAID 720i AnyRAID Adapter
- Lenovo ThinkServer RAID 720ix AnyRAID Adapter

RAID card:

- Lenovo ThinkServer RAID 500 PCIe Adapter
- Lenovo ThinkServer RAID 710 PCIe Adapter

The following illustrations help you locate the connectors on the AnyRAID adapters and RAID cards.

Note: Depending on the configuration, the AnyRAID adapter or RAID card installed in your server might look slightly different from the illustrations in this topic.

Lenovo ThinkServer RAID 110i AnyRAID Adapter

The Lenovo ThinkServer RAID 110i AnyRAID Adapter provides SATA software RAID function. The following illustration shows the connectors on the adapter.

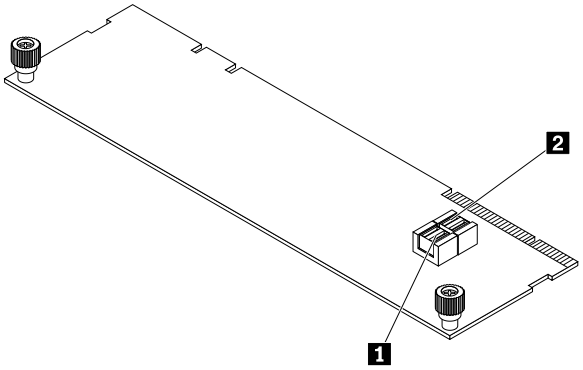

Figure 11. Lenovo ThinkServer RAID 110i AnyRAID Adapter

1 SATA 0–3 connector

Used to connect to the SATA connector 0 (ports 0–3) on the system board. See “System board components” on page 38.

2 SATA 4–7 connector

Used to connect to the SATA connector 1 (ports 4–7) on the system board. See “System board components” on page 38.

Lenovo ThinkServer RAID 510i AnyRAID Adapter

The Lenovo ThinkServer RAID 510i AnyRAID Adapter provides advanced SATA/SAS hardware RAID functions. The following illustration shows the connectors on the adapter.

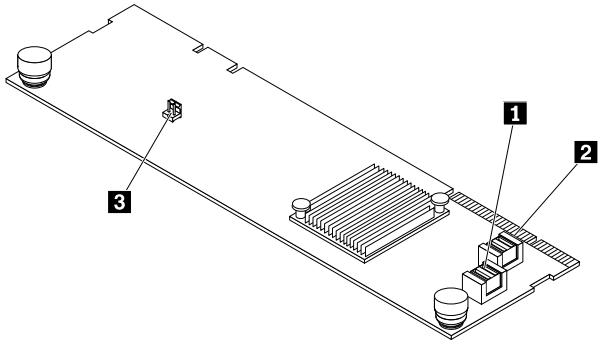

Figure 12. Lenovo ThinkServer RAID 510i AnyRAID Adapter

1 PCIE 0 connector

2 PCIE 1 connector

Used to connect to the AnyRAID connector 0–1 on the system board. See “System board components” on page 38.

3 RAID upgrade key connector

Used to connect a ThinkServer RAID 510i upgrade key.

Lenovo ThinkServer RAID 720i AnyRAID Adapter

The Lenovo ThinkServer RAID 720i AnyRAID Adapter provides advanced SATA/SAS hardware RAID functions. The following illustration shows the connectors on the adapter.

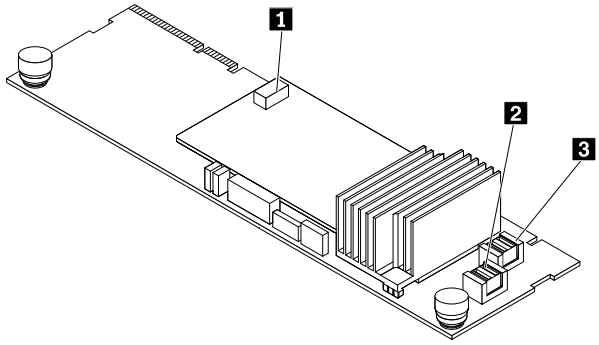

Figure 13. ThinkServer RAID 720i AnyRAID Adapter

1 ThinkServer RAID Super Capacitor Module connector (available on some models)

Used to connect to the ThinkServer RAID Super Capacitor Module. See “Server components” on page 25.

2 PCIE 0 connector

3 PCIE 1 connector

Used to connect to the AnyRAID connector 0–1 on the system board. See “System board components” on page 38.

ThinkServer RAID 720ix AnyRAID Adapter

The Lenovo ThinkServer RAID 720ix AnyRAID Adapter provides advanced SATA/SAS hardware RAID functions. The adapter is used in server models supporting the internal tape drive. The following illustration shows the connectors on the adapter.

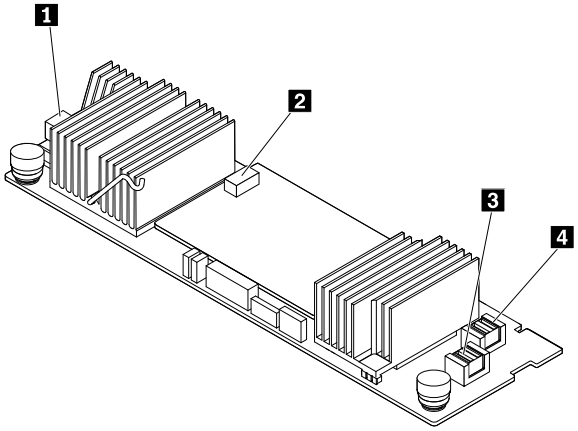

Figure 14. ThinkServer RAID 720ix AnyRAID Adapter

1 SATA connector

Used to connect the SATA signal cable from the internal tape drive if one is installed.

2 ThinkServer RAID Super Capacitor Module connector

Used to connect to the ThinkServer RAID Super Capacitor Module. See “Server components” on page 25.

3 PCIE 0 connector

4 PCIE 1 connector

Used to connect to the AnyRAID connector 0–1 on the system board. See “System board components” on page 38.

Lenovo ThinkServer RAID 500 PCIe Adapter

The Lenovo ThinkServer RAID 500 PCIe Adapter is used to provide advanced SATA/SAS hardware RAID functions. The following illustration shows the connectors on the RAID card.

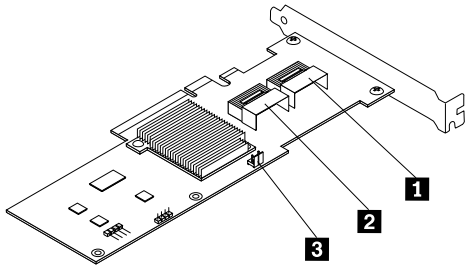

Figure 15. Lenovo ThinkServer RAID 500 PCIe Adapter

1 Port 0

Used to connect to the SAS connector 1 (ports 0–3) on the backplane for up to eight 3.5-inch drives. See “Backplane for up to eight 3.5-inch drives” on page 35.

2 Port 1

Used to connect to the SAS connector 2 (ports 4–7) on the backplane for up to eight 3.5-inch drives. See “Backplane for up to eight 3.5-inch drives” on page 35.

3 RAID 500 upgrade key connector

Used to connect a Lenovo ThinkServer RAID 500 upgrade key for advanced RAID.

Lenovo ThinkServer RAID 710 PCIe Adapter

The Lenovo ThinkServer RAID 710 PCIe Adapter is used to provide advanced SATA/SAS hardware RAID functions. The following illustration shows the connectors on the RAID card.

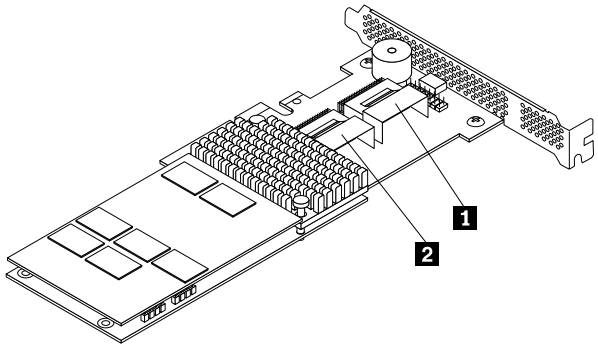

Figure 16. Lenovo ThinkServer RAID 710 PCIe Adapter

1 Port 1

Used to connect to the SAS connector 1 (ports 0–3) on the backplane for up to eight 3.5-inch drives. See “Backplane for up to eight 3.5-inch drives” on page 35.

2 Port 2

Used to connect to the SAS connector 2 (ports 4–7) on the backplane for up to eight 3.5-inch drives. See “Backplane for up to eight 3.5-inch drives” on page 35.

Hot-swap-drive backplane

Your server comes with one of the following drive bay and backplane configurations:

Drive bay size	Drive bay quantity	Backplane quantity	Drive type
3.5-inch	8	1	Hot-swap, SATA or SAS 3.5-inch hard disk drive or 2.5-inch solid-state drive
2.5-inch	8	1	Hot-swap, SATA or SAS Hard disk drive or solid-state drive
2.5-inch	16	2	Hot-swap, SATA or SAS Hard disk drive or solid-state drive
2.5-inch	24	2	Hot-swap, SATA or SAS Hard disk drive or solid-state drive

To locate the backplanes, see “Server components” on page 25.

Backplane for up to eight 3.5-inch drives

The following illustrations show the slots and connectors on the backplane for up to eight 3.5-inch drives.

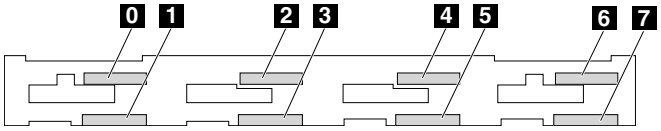

Figure 17. Front view of the backplane for up to eight 3.5-inch drives

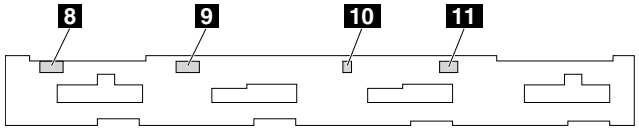

Figure 18. Rear view of the backplane for up to eight 3.5-inch drives

0–**7** **Slot 0–slot 7**

Used to connect 3.5-inch drives.

8 **10-pin power connector**

Used to connect to the 10-pin backplane power connector on the system board to provide power to the backplane.

9 **SAS connector 2 (ports 4–7)**

Used to connect to one of the following connectors:

- SATA connector 1 (ports 4–7) on the system board
- Port 1 on the Lenovo ThinkServer RAID 500 PCIe Adapter
- Port 2 on the Lenovo ThinkServer RAID 710 PCIe Adapter

10 **2-pin power connector**

Used to connect to an optical drive if one is installed.

11 **SAS connector 1 (ports 0–3)**

Used to connect to one of the following connectors:

- SATA connector 0 (ports 0–3) on the system board
- Port 0 on the Lenovo ThinkServer RAID 500 PCIe Adapter
- Port 1 on the Lenovo ThinkServer RAID 710 PCIe Adapter

Backplane for up to sixteen 2.5-inch drives

The following illustrations show the slots and connectors on the backplane for up to sixteen 2.5-inch drives.

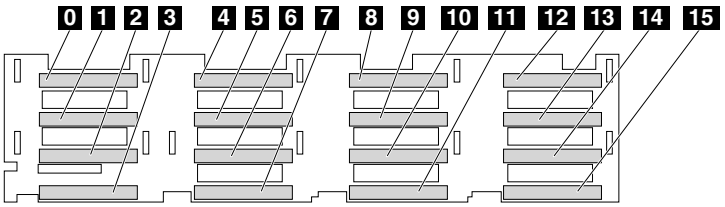

Figure 19. Front view of the backplane for up to sixteen 2.5-inch drives

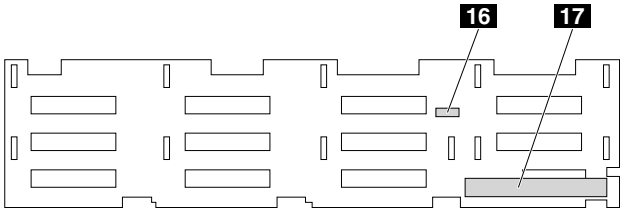

Figure 20. Rear view of the backplane for up to sixteen 2.5-inch drives

0–15 Slot 0–slot 15

Used to connect 2.5-inch drives.

16 10-pin power connector 0

Used to connect to the 10-pin backplane power connector on the system board to provide power to the backplane.

17 AnyRAID adapter slot 0

Used to connect an AnyRAID adapter.

Backplane for up to eight 2.5-inch drives

The following illustrations show the slots and connectors on the backplane for up to eight 2.5-inch drives.

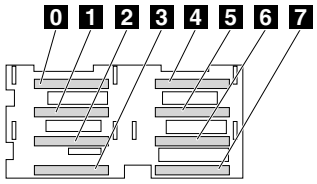

Figure 21. Front view of the backplane for up to eight 2.5-inch drives

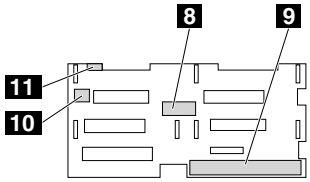

Figure 22. Rear view of the backplane for up to eight 2.5-inch drives

0–7 Slot 0–slot 7

Used to connect 2.5-inch drives.

8 10-pin power connector 0

Used to connect to the 10-pin backplane power connector on the system board to provide power to the backplane.

9 AnyRAID adapter slot 0

Used to connect an AnyRAID adapter.

10 4-pin power connector

Used to connect to an internal tape drive if one is installed.

11 2-pin power connector

Used to connect to a slim optical drive if one is installed.

System board components

The following illustration shows the component locations on the system board.

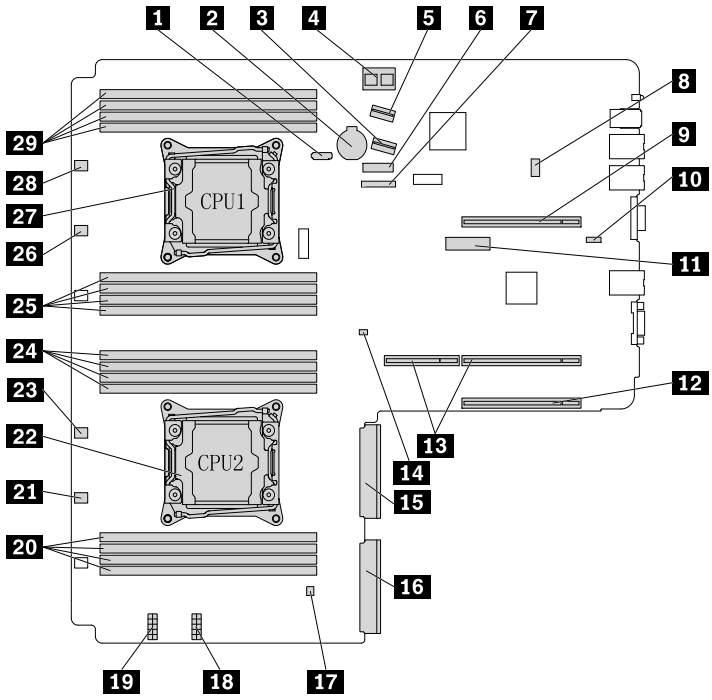

Figure 23. System board components

1 SATA connector (optical drive)	2 Coin-cell battery
3 SATA connector 1 (ports 4–7)	4 AnyRAID connector 0–1
5 SATA connector 0 (ports 0–3)	6 Front panel connector 1
7 Front panel connector 2	8 SD module connector
9 Riser card assembly 1 slot	10 TSM Premium connector
11 TPM connector	12 PCIe slot
13 Riser card assembly 2 slot	14 RAID upgrade key connector
15 Power supply connector 2	16 Power supply connector 1
17 Intrusion switch connector	18 Backplane power connector 2
19 Backplane power connector 1	20 Microprocessor 2 memory slots (4)
21 System fan 5 connector	22 Microprocessor 2 socket
23 System fan 4 connector	24 Microprocessor 2 memory slots (4)
25 Microprocessor 1 memory slots (4)	26 System fan 2 connector
27 Microprocessor 1 socket	28 System fan 1 connector
29 Microprocessor 1 memory slots (4)	

1 SATA connector (optical drive)

Used to connect the signal cable of the slim optical drive.

2 Coin-cell battery

Your server has a special type of memory that maintains the date, time, and configuration information for built-in features. The coin-cell battery keeps the information active when you turn off the server.

3 SATA connector 1 (ports 4–7)

Used to connect to one of the following connectors:

- SAS connector 2 (ports 4–7) on the backplane for up to eight 3.5-inch drives
- SATA 4–7 connector on the Lenovo ThinkServer RAID 110i AnyRAID Adapter

4 AnyRAID connector 0–1

Used to connect to the PCIe connectors on the AnyRAID adapter.

5 SATA connector 0 (ports 0–3)

Used to connect to one of the following connectors:

- SAS connector 1 (ports 0–3) on the backplane for up to eight 3.5-inch drives
- SATA 0–3 connector on the Lenovo ThinkServer RAID 110i AnyRAID Adapter

6 7 Front panel connector

Used to connect to the front panel board.

8 SD module connector

Used to connect an SD module.

9 Riser card assembly 1 slot

Used to install the riser card assembly 1.

10 TSM Premium connector

Used to connect a TSM premium module to enable advanced remote management functions on your server.

11 TPM connector

Used to connect a TPM. TPM is a security chip that is used to enhance server security.

12 PCIe slot

Used to install a supported PCIe card. For information about supported PCIe cards, see “Rear view of the server” on page 23.

13 Riser card assembly 2 slot

Used to install the riser card assembly 2.

14 RAID upgrade key connector

Used to connect a ThinkServer RAID 110i upgrade key.

15 Power supply connector 2

Used to connect the power supply 2.

16 Power supply connector 1

Used to connect the power supply 1.

17 Intrusion switch connector

Used to connect to an intrusion switch.

18 19 Backplane power connector

Used to connect to the 10-pin power connector on the backplane.

21 23 26 28 System fan connector

Used to connect a system fan.

20 24 25 29 Memory slots

There are 16 memory slots on the system board. For detailed information, see “Memory module installation rules” on page 70.

22 Microprocessor 2 socket

27 Microprocessor 1 socket

If the server has two microprocessors, each of the microprocessor is secured in the microprocessor socket on the system board and a heat sink is installed above the microprocessor to provide cooling. If the server has only one microprocessor, the microprocessor socket 2 is protected by a microprocessor socket cover.

System board jumpers

The following illustration shows the jumpers on the system board of your server.

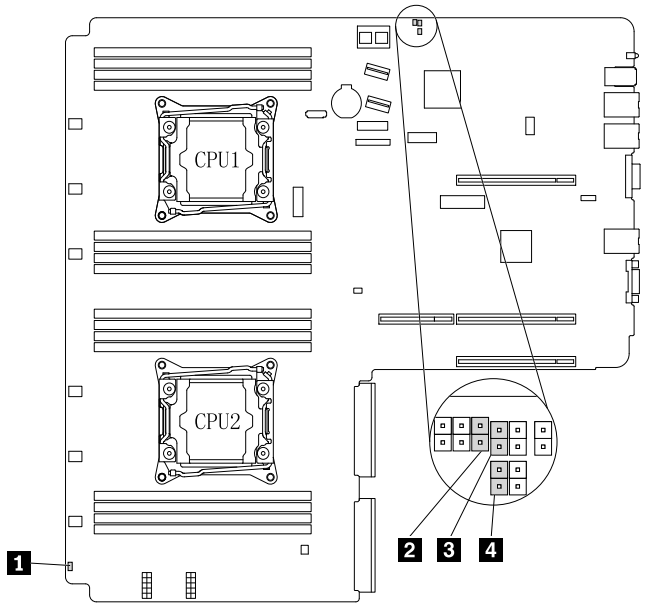

Figure 24. System board jumpers

1 Jumper cap storage	2 BIOS recovery jumper
3 BIOS default settings jumper	4 Clear password jumper

Attention: To set the jumpers, remove the server cover and gain access to the system board first. Do not open your server or attempt any repair before reading and understanding “Safety information” on page iii and “Guidelines” on page 59.

1 Jumper cap storage

Used to store the jumper cap. A jumper cap is encased on the pins by default.

2 BIOS recovery jumper

Used to recover the BIOS if the power to your server is interrupted while the BIOS is being updated and your server cannot start correctly.

To recover the BIOS, see “Recovering from a BIOS update failure” on page 53.

3 BIOS default settings jumper

Used to turn the BIOS settings into the factory-default settings.

To turn the BIOS settings into the factory-default settings, do the following:

1. Remove all external media from the drives and turn off all attached devices and the server. Then, disconnect all power cords from electrical outlets and disconnect all cables that are connected to the server.
2. Prepare your server. See “Removing or extending the server from the rack cabinet” on page 61.

3. Remove the server cover. See “Removing the server cover” on page 61.
4. Locate the BIOS default settings jumper 3 on the system board. Then, remove any parts and disconnect any cables that might impede your access to the jumper.

   Note: Do not remove the memory modules or microprocessors.
5. Remove the jumper cap from the jumper cap storage 1.
6. Note the orientation of the jumper cap and then install the jumper cap on the BIOS default settings jumper.
7. Reinstall any parts and reconnect any cables. Then, reinstall the server cover. See “Completing the parts replacement” on page 165.
8. Connect the server to an ac power source and wait for several minutes. Then, turn on the server. The BIOS settings turn into the factory-default settings.
9. Repeat step 1 through step 3.
10. Move the jumper cap back to the jumper cap storage 1.
11. Reinstall any parts and reconnect any cables. Then, reinstall the server cover. See “Completing the parts replacement” on page 165.
12. Connect the server to an ac power source and turn on the server.

4 Clear password jumper

Used to erase forgotten passwords, such as the BIOS passwords.

To clear passwords, do the following:

1. Remove all external media from the drives and turn off all attached devices and the server. Then, disconnect all power cords from electrical outlets and disconnect all cables that are connected to the server.
2. Prepare your server. See “Removing or extending the server from the rack cabinet” on page 61.
3. Remove the server cover. See “Removing the server cover” on page 61.
4. Locate the clear password jumper 4 on the system board. Then, remove any parts and disconnect any cables that might impede your access to the jumper.

   Note: Do not remove the memory modules or microprocessors.
5. Remove the jumper cap from the jumper cap storage 1.
6. Note the orientation of the jumper cap and then install the jumper cap on the clear password jumper.
7. Reinstall any parts and reconnect any cables. Then, reinstall the server cover. See “Completing the parts replacement” on page 165.
8. Connect the server to an ac power source and wait for several minutes. Then, turn on the server. The BIOS passwords are erased, including the administrator password and user password.
9. Repeat step 1 through step 3.
10. Move the jumper cap back to the jumper cap storage 1.
11. Reinstall any parts and reconnect any cables. Then, reinstall the server cover. See “Completing the parts replacement” on page 165.
12. Connect the server to an ac power source and turn on the server.
13. To set new passwords, see “Using passwords” on page 50.

Hot-swap-drive status LEDs

Each hot-swap drive has two status LEDs on the front.

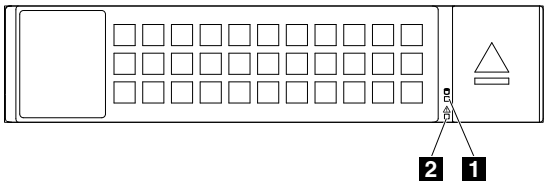

Figure 25. Hot-swap-drive status LEDs

1 Drive activity LED	2 Drive status LED	Description
Off	Off	The drive has failed or is not present.
On, green	Off	The drive is present but not in use.
Blinking, green	Off	The drive is active and data is being transferred.
On, green	Blinking rapidly (about four flashes per second), amber	The RAID controller is identifying the drive.
On, green	On, amber	The RAID array has failed and cannot be recovered. You must recreate a new array.
Blinking, green	Blinking slowly (about one flash per second), amber	The drive is being rebuilt.

Power supply status LEDs

Each hot-swap power supply has three status LEDs.

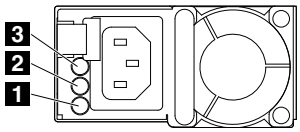

Figure 26. Power supply status LEDs

LED	Status	Description	Action
1 Input status LED	Off	The power supply is disconnected from the ac power source.	No action is needed.
	On, green	The power supply is connected to the ac power source.	No action is needed.
2 Output status LED	Off	The server is off or the power supply is not working normally.	Replace the power supply. See "Installing or replacing a hot-swap redundant power supply" on page 114.
	Blinking, green (about one flash every two seconds)	The power supply is in cold redundancy active mode.	No action is needed.
	Blinking, green (about two flashes each second)	The power supply is in cold redundancy sleep mode.	No action is needed.
	On, green	The server is on and the power supply is working normally.	No action is needed.
3 Fault LED	Off	The power supply is working normally.	No action is needed.
	On, amber	The power supply has failed.	Replace the power supply. See "Installing or replacing a hot-swap redundant power supply" on page 114.

Connecting cables

To connect the signal cables from the installed hardware components, refer to the related information in the following topics:

- "System board components" on page 38
- "AnyRAID adapter and RAID card" on page 28
- "Hot-swap-drive backplane" on page 34
- "Installing the tape drive" on page 153

Chapter 4. Turning on and turning off the server

This chapter provides information about turning on and turning off the server.

Turning on the server

The server can be turned on in one of the following ways:

- After you finish unpacking and setting up the server, connect it to an ac power source. Press the power button on the front panel to turn on the server. See “Front panel” on page 21. The server needs about 30 seconds for the ThinkServer System Manager (TSM, also known as BMC) to initialize whenever you connect the server to an ac power source. If you press the power button on the front panel during this period, the server will not start immediately; it will start after the TSM initialization finishes.
- When the Wake on LAN feature is enabled on the server that is connected to an ac power source and a LAN, a network administrator can remotely turn on or wake up the server from a management console using remote network management software.
- You also can use the related TSM feature to remotely turn on the server through the management LAN.

Turning off the server

CAUTION:
The power control button on the device and the power button on the power supply do not turn off the electrical current supplied to the device. The device also might have more than one power cord. To remove all electrical current from the device, ensure that all power cords are disconnected from the power source.

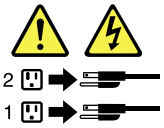

The server can be turned off in one of the following ways:

- Turn off the server from the operating system if your operating system supports this feature. After an orderly shutdown of the operating system, the server will turn off automatically. For instructions on how to shut down your specific operating system, refer to the related documentation or help system for the operating system.
- Press the power button on the front panel to start an orderly shutdown of the operating system and turn off the server, if your operating system supports this feature.
- If your server stops responding and you cannot turn it off, press and hold the power button on the front panel for four seconds or more. If you still cannot turn off the server, disconnect all power cords from the server.
- If the server is connected to a LAN, a network administrator can remotely turn off the server from a management console using remote network management software.
- You also can use the related TSM feature to remotely turn off the server through the management LAN.
- The server might be turned off as an automatic response to a critical system failure.

Notes:

- When you turn off the server and leave it connected to an ac power source, the server also can respond to a remote request to turn on the server. To remove all power from the server, you must disconnect the server from the ac power source.

© Copyright Lenovo 2014

- For information about your specific operating system, refer to the related documentation or help system for the operating system.

Chapter 5. Configuring the server

This chapter provides the following information to help you configure the server:

- “Using the Setup Utility program” on page 47
- “Configuring RAID” on page 54
- “Updating the firmware” on page 57

Using the Setup Utility program

The Setup Utility program is part of the server firmware. You can use the Setup Utility program to view and change the configuration settings of your server, regardless of which operating system you are using. However, the operating system settings might override any similar settings in the Setup Utility program.

Starting the Setup Utility program

To start the Setup Utility program, do the following:

1. Connect the server to an ac power source and press the power button on the front panel to turn on the server. See “Turning on the server” on page 45.
2. Press the F1 key as soon as you see the logo screen. Then, wait for several seconds, and the Setup Utility program opens. If you have set a password, type the correct password to enter the Setup Utility program. For password information, see “Using passwords” on page 50.

Viewing information in the Setup Utility program

The Setup Utility program menu lists various items about the system configuration. Select a desired item to view information or change settings.

When working with the Setup Utility program, you must use the keyboard. The keys used to perform various tasks are displayed on the right bottom pane of each screen. You also can press the F1 key for general help about the keys. For most items, the corresponding help message is displayed on the right top pane of the screen when the item is selected. If the item has submenus, you can display the submenus by pressing Enter.

Setup Utility program interface

Depending on the BIOS version of your server, some menu or item information might differ slightly from the information in this topic.

Notes:

- The default settings already are optimized for you. Use the default value for any item you are not familiar with. Do not change the value of unfamiliar items to avoid unexpected problems. If you consider changing the server configuration, proceed with extreme caution. Setting the configuration incorrectly might cause unexpected results. If you cannot turn on the server because of incorrect BIOS settings, use the BIOS default settings jumper to restore the BIOS settings to the factory default settings. See “System board jumpers” on page 41.
- If you have changed any hardware in the server, upgrade the BIOS and the TSM firmware if necessary.

© Copyright Lenovo 2014

The Setup Utility program main interface consists of the following menus:

- "System Information menu" on page 48
- "Advanced Settings menu" on page 48
- "System Security menu" on page 49
- "TSM Settings menu" on page 49
- "Boot Manager menu" on page 49
- "Save & Exit menu" on page 49

Lenovo provides the BIOS update utility on the Lenovo Support Web site. You can download the BIOS update utility to update the BIOS. See "Updating or recovering the BIOS" on page 53.

If the power to your server is interrupted while the BIOS is being updated and your server cannot start correctly, the BIOS will recover to the previous version automatically. The recovery process lasts about 20 minutes. You also can use the BIOS recovery jumper to recover from a BIOS update failure. See "System board jumpers" on page 41.

System Information menu

After entering the Setup Utility program, you can see the **System Information** menu. The menu lists basic information about your server, such as the BIOS, microprocessor type, memory, and system date and time.

To set the system date and time on the **System Information** menu, see "Setting the system date and time" on page 50.

Advanced Settings menu

You can view or change various server component settings on the **Advanced Settings** menu in the Setup Utility program. The **Advanced Settings** menu contains various configuration submenus and items. On each submenu, press Enter to show selectable options and select a desired option by using the up and down arrow keys or type desired values from the keyboard. Some items are displayed on the menu only if the server supports the corresponding features.

Notes:

- **Enabled** means that the function is configured.
- **Disabled** means that the function is not configured.

The **Advanced Settings** menu contains the following submenus. For more information, enter the corresponding submenu and refer to the instructions on the screen.

- **Processor Settings**: View information about the installed microprocessors and set microprocessor configuration parameters.
- **Memory Settings**: View information about the installed memory modules and set memory configuration parameters.
- **Advanced Power Settings**: View and set power and performance parameters.
- **PCI/PCIE Settings**: View and set PCI or PCIe configuration parameters.
- **SATA Settings**: Set onboard SATA parameters.
- **USB Settings**: View and set USB configuration parameters, such as enabling or disabling USB devices.
- **Serial Settings**: View and set configuration parameters for the serial connector.
- **Wakeup Settings**: View and configure the wakeup timing and set the power state after a power failure.
- **Miscellaneous Settings**: View and configure some miscellaneous items, such as the NumLock key on the keyboard and the boot status code.

System Security menu

You can set passwords and configure the TPM function on the **System Security** menu in the Setup Utility program. For each menu item, press Enter to show selectable options and select a desired option by using the up and down arrow keys or type desired values from the keyboard. Some items are displayed on the menu only if the server supports the corresponding features.

Notes:

- **Enabled** means that the function is configured.
- **Disabled** means that the function is not configured.

The **System Security** menu contains the following items:

- **Administrator Password**: Set an administrator password to protect against unauthorized access to your server. See “Using passwords” on page 50.
- **User Password**: Set a user password to protect against unauthorized access to your server. See “Using passwords” on page 50.
- **Secure Boot**: Set secure boot parameters.
- **TPM/TCM**: Configure the TPM function if your server has a TPM installed in the TPM connector on the system board. See “Configuring the TPM function” on page 52.

TSM Settings menu

You can view or change event log and BMC settings on the **TSM Settings** menu in the Setup Utility program. On each submenu, press Enter to view the information or show selectable options and select a desired option by using the up and down arrow keys. Some items are displayed on the menu only if the server supports the corresponding features.

The **TSM Settings** menu contains the following submenus. For more information, enter the corresponding submenu and refer to the instructions on the screen.

- **TSM Network Settings**: Set BMC management network configuration parameters.
- **User Account Settings**: Set BMC user account parameters.

Boot Manager menu

The **Boot Manager** menu in the Setup Utility program lists all the bootable devices installed in your server and the listed items vary depending on your server configuration.

The **Boot Sequence** submenu in the **Boot Manager** menu provides an interface to help you view or change the server startup options, including the startup sequence and boot priority for various devices. Changes in the startup options take effect when the server restarts. The startup sequence specifies the order in which the server checks devices to find a boot record. The server starts from the first boot record that it finds. For example, you can define a startup sequence that checks a disc in the optical drive, then checks the internal storage drive, and then checks a network device. For information about setting the startup sequence or selecting a startup device, see “Selecting a startup device” on page 51.

Save & Exit menu

After you finish viewing or changing settings in the Setup Utility program, you can choose a desired action from the **Save & Exit** menu to save changes, discard changes, or load default values, and exit the program. Press Enter to select the item on the **Save & Exit** menu, and then select **Yes** when prompted to confirm the action. For information about exiting the Setup Utility program, see “Exiting the Setup Utility program” on page 52.

The **Save & Exit** menu contains the following items:

- **Save Changes and Reset**: Save changes and then continue with further configuration in the Setup Utility program.
- **Discard Changes and Exit**: Discard changes, load previous values, and then exit the Setup Utility program.
- **Load Optimized Defaults**: Return to the optimized default settings.
- **Save as User Defaults**: Save the current settings as user default values.
- **Restore User Defaults**: Restore the user default values for all the items.
- **Pure UEFI OS Optimized Defaults**: Enable or disable optimized default settings for the pure UEFI operating system.

Setting the system date and time

To set the system date and time in the Setup Utility program, do the following:

1. Start the Setup Utility program. See “Starting the Setup Utility program” on page 47.
2. On the **System Information** menu, select **System Date** or **System Time**.
3. Use the Tab key to switch between data elements and type the numbers from the keyboard to set the system date and time.
4. Press F10 to save settings and exit the Setup Utility program.

Using passwords

By using the Setup Utility program, you can set a password to prevent unauthorized access to your server.

You do not have to set a password to use your server. However, using a password improves computing security. If you decide to set a password, read the following topics.

Setup Utility program password types

The following types of passwords are available in the Setup Utility program:

- **Administrator password**

  Setting an administrator password deters unauthorized users from changing configuration settings. If you are responsible for maintaining the configuration settings of several servers, you might want to set an administrator password. When an administrator password is set, you are prompted to type a valid password each time you try to access the Setup Utility program. The Setup Utility program cannot be accessed until a valid password is typed in.

- **User password**

  When a user password is set, you are prompted to type a valid password each time the server turns on. You cannot log in to any operating system until a valid password is typed in.

Note: If both the administrator password and user password are set, you can type either password to use the server. However, you must use your administrator password to change any configuration settings.

Password considerations

For security reasons, it is recommended to use a strong password that cannot be easily compromised.

Notes:

- The Setup Utility program passwords are not case sensitive.
- The server supports Setup Utility program passwords that consist of three to 32 characters.

To set a strong password, use the following guidelines:

- Have at least eight characters in length
- Contain at least one alphabetic character and one numeric character
- Not be your name or your user name
- Not be a common word or a common name
- Be significantly different from your previous passwords

Besides the alphabetic characters (a–z) and numeric characters (0–9), the server also supports characters typed using special keys on the keyboard for a password. Refer to the help message on the screen when setting a password to determine the valid special characters.

Setting, changing, or deleting a password

This topic provides instructions on how to set, change, or delete a password in the Setup Utility program.

To set, change, or delete a password in the Setup Utility program, do the following:

1. Start the Setup Utility program. See “Starting the Setup Utility program” on page 47.
2. On the **System Security** menu, select **Administrator Password** to set an administrator password or select **User Password** to set a user password.
3. See “Password considerations” on page 50. Then, follow the instructions on the screen to set or change a password.
4. If you want to delete a password, type your current password. Press Enter when you are prompted to type a new password. Then, press Enter to confirm the new password. The previous password will be cleared.

   Note: For security reasons, it is recommended that you always set a password for your server.
5. Press F10 to save settings and exit the Setup Utility program.

If you have forgotten the password, you can use the clear password jumper on the system board to erase the password. See “System board jumpers” on page 41. Then, set a new password for the server.

Selecting a startup device

If your server does not start up from a desired device such as the disc or hard disk drive as expected, do one of the following to select the startup device you want.

Note: Not all discs, hard disk drives, or other removable devices are bootable.

- To select a temporary startup device, do the following:

  Note: Selecting a startup device using the following method does not permanently change the startup sequence.

  1. Turn on or restart your server.
  2. When you see the logo screen, press F11 if your server is connected to a network and you want to start up the server from the network. Otherwise, press F12 to display the boot menu. The boot device selection window opens.
  3. In the boot device selection window, use the up and down arrow keys on the keyboard to switch between the selections. Press Enter to select the device of your choice. Then, the server will start up from the selected device.
- To view or permanently change the configured startup device sequence, do the following:
  1. Start the Setup Utility program. See “Starting the Setup Utility program” on page 47.

2. On the **Boot Sequence** submenu under the **Boot Manager** menu, follow the instructions on the screen to set the startup device for **Boot Option #1** to **Boot Option #5** depending on your needs. You also can set the boot priority for various devices. See “Boot Manager menu” on page 49.
3. Press F10 to save settings and exit the Setup Utility program. The server will follow the startup device sequence you have set each time you turn on the server.

Configuring the TPM function

The TPM works as a hardware security solution to help you encrypt data and protect the server. The TPM function is only available when there is a TPM installed in your server. See “Installing the TPM” on page 112. You can purchase a TPM from Lenovo.

After installing a TPM, check if the TPM function is enabled in the Setup Utility program.

To enable the TPM function in the Setup Utility program, do the following:

1. Start the Setup Utility program. See “Starting the Setup Utility program” on page 47.
2. On the **System Security** menu, select **TPM Settings → TPM Support**.
3. Do one of the following:
   - If **TPM Support** is set to **Enabled**, the **TPM Security Feature** item is displayed. Set **TPM Security Feature** to **Activate**.
   - If **TPM Support** is set to **Disabled**, do the following:
     a. Set **TPM Support** to **Enabled** and press F10 to save settings and exit the Setup Utility program. The server will restart.
     b. Start the Setup Utility program. On the **System Security** menu, select **TPM Settings**. Then, set **TPM Security Feature** to **Activate**.
4. Press F10 to save settings and exit the Setup Utility program. The server will restart to enable the TPM function.

Setting an Ethernet connector for system management

There are three RJ-45 Ethernet connectors on the rear of the server. The Ethernet connector 0 is for system management by default. However, you also can set the Ethernet connector 1 for system management use. To locate the three Ethernet connectors, see “Rear view of the server” on page 23.

To set the Ethernet connector for system management, do the following:

1. Start the Setup Utility program. See “Starting the Setup Utility program” on page 47.
2. On the **TSM Settings** menu, select **TSM Network Settings → TSM NIC Selection**.
3. Do one of the following:
   - To set the Ethernet connector 0 for system management, select **Dedicated Port**.
   - To set the Ethernet connector 1 for system management, select **Shared NIC Port**.
4. Press F10 to save settings and exit the Setup Utility program.

Exiting the Setup Utility program

After you finish viewing or changing settings, press Esc to return to the Setup Utility program main interface. If you are on a nested submenu, press Esc repeatedly until you reach the main interface. Then, you can do one of the following to exit the Setup Utility program:

- If you want to save the new settings and exit the Setup Utility program, press F10 or select **Save & Exit → Save Changes and Reset**. Otherwise, your changes will not be saved.

- If you do not want to save the new settings, select **Save & Exit → Discard Changes and Exit**.
- If you want to return to the default settings, press F9 or select **Save & Exit → Load Optimized Defaults**.

For more information about the **Save & Exit** menu in the Setup Utility program, see “Save & Exit menu” on page 49.

Updating or recovering the BIOS

This topic provides instructions on how to update the BIOS and how to recover from a POST and BIOS update failure.

Lenovo might make changes and enhancements to the BIOS and TSM firmware. When updates are released, they are available for download on the Lenovo Web site at http://www.lenovo.com/drivers. You can update the server firmware by downloading an update package and following the instructions on the Web page.

Updating (flashing) the BIOS

This topic provides instructions on how to update (flash) the BIOS.

Notes:

- Update the BIOS on your server only if the newer BIOS version specifically solves a problem you have. We do not recommend BIOS updates for servers that do not need them. You can view the updated information for the new BIOS version in the installation instructions for the BIOS update utility program.
- Downgrading the BIOS to an earlier version is not recommended and might not be supported. An earlier BIOS version might not support the latest system configurations.
- If the power to your server is interrupted while the POST and BIOS are being updated, your server might not restart correctly. Ensure that you perform the BIOS update procedure in an environment with a steady power supply. Besides, ensure that your server can restart successfully without encountering hardware problems.
- After updating the BIOS firmware, all of your previous BIOS settings will be automatically restored. Check and reconfigure the BIOS settings for your specific needs.

To update (flash) the BIOS, do the following:

1. Go to http://www.lenovo.com/drivers and follow the instructions on the Web page to locate the BIOS update package.
2. Download the BIOS update package and the installation instructions in a TXT file.
3. Print the TXT file that contains the installation instructions and follow the instructions to update (flash) the BIOS.
4. Check and reconfigure the BIOS settings for your specific needs based on your note or refer to “Using the Setup Utility program” on page 47 after the BIOS update process is completed.

Recovering from a BIOS update failure

If the power to your server is interrupted while the BIOS is being updated, your server might not restart correctly. Perform the following procedure to recover from the BIOS update failure.

Note: If the operating system of your server is installed under EFI mode, reinstall the operating system after recovering the BIOS.

To recover from a BIOS update failure, do one of the following:

- **Using the automatic recovery feature**
    1. Reconnect the server to an ac power source.

2. After the system health LED turns off, press the power button to turn on the server. The server is turned on and then turned off automatically. Then, the recovery process starts. The recovery process lasts about 20 minutes. After the recovery process is completed, the server starts automatically.
3. Check and configure the BIOS settings for your specific needs. See “Using the Setup Utility program” on page 47.

- **Using the BIOS recovery jumper**
  1. Remove all external media from the drives and turn off all attached devices and the server. Then, disconnect all power cords from electrical outlets and disconnect all cables that are connected to the server.
  2. Prepare your server. See “Removing or extending the server from the rack cabinet” on page 61.
  3. Remove the server cover. See “Removing the server cover” on page 61.
  4. Locate the BIOS recovery jumper on the system board. See “System board jumpers” on page 41. Then, remove any parts and disconnect any cables that might impede your access to the jumper.

     Note: Do not remove the memory modules or microprocessors.
  5. Remove the jumper cap from the jumper cap storage. See “System board jumpers” on page 41.
  6. Note the orientation of the jumper cap and then install the jumper cap on the BIOS recovery jumper.
  7. Connect the server to an ac power source. The server turns on and then turns off automatically.
  8. Move the jumper cap back to the jumper cap storage. See “System board jumpers” on page 41.
  9. Wait for several minutes. When the BIOS recovery process is completed, the server turns on automatically.
  10. Ensure that the Setup Utility program starts normally. See “Starting the Setup Utility program” on page 47. Then, disconnect the server from the ac power source.
  11. Reinstall any parts and reconnect any cables. Then, reinstall the server cover. See “Completing the parts replacement” on page 165.
  12. Connect the server to an ac power source and turn on the server. Check and configure the BIOS settings for your specific needs. See “Using the Setup Utility program” on page 47.

Note: If you cannot recover the BIOS after using the instructions in this topic, the BIOS read-only memory (ROM) might be damaged. You must replace the system board. Contact the Lenovo Customer Support Center.

Configuring RAID

This topic provides information about RAID and the utility programs that are available for you to configure RAID.

This topic contains the following information:

- “About RAID” on page 54
- “Configuring RAID using the Lenovo ThinkServer Deployment Manager program” on page 56
- “Configuring the advanced SATA or SAS hardware RAID” on page 56

About RAID

RAID, an acronym for Redundant Array of Independent Disks, is a technology that provides increased storage functions and reliability through redundancy. This is achieved by combining multiple hard disk drives into a logical unit, where data is distributed across the drives in one of several ways called RAID levels.

When a group of independent physical hard disk drives are set up to use RAID technology, they are in a RAID array. This array distributes data across multiple hard disk drives, but the array appears to the host server as one single storage unit. Creating and using RAID arrays provides high performance, such as the expedited I/O performance, because several drives can be accessed simultaneously.

RAID drive groups also improve data storage reliability and fault tolerance compared with single-drive storage systems. Data loss resulting from a drive failure can be prevented by reconstructing missing data from the remaining drives.

The following list describes some of the most commonly used RAID levels:

- **RAID 0**: block-level striping without parity or mirroring

  Simple stripe sets are normally referred to as RAID 0. RAID 0 uses striping to provide high data throughput, especially for large files in an environment that does not require fault tolerance. RAID 0 has no redundancy and it provides improved performance and additional storage without fault tolerance. Any drive failure destroys the array and the likelihood of failure increases with more drives in the array. RAID 0 does not implement error checking, so any error is uncorrectable. More drives in the array means higher bandwidth, but greater risk of data loss.

  RAID 0 requires a minimum number of two hard disk drives.

- **RAID 1**: mirroring without parity or striping

  RAID 1 uses mirroring so that data written to one drive is simultaneously written to another drive. This is good for small databases or other applications that require small capacity but complete data redundancy. RAID 1 provides fault tolerance from disk errors or failures and continues to operate as long as at least one drive in the mirrored set is functioning. With appropriate operating system support, there can be increased read performance and only a minimal write performance reduction.

  RAID 1 requires a minimum number of two hard disk drives.

- **RAID 5**: block-level striping with distributed parity

  RAID 5 uses disk striping and parity data across all drives (distributed parity) to provide high data throughput, especially for small random access. RAID 5 distributes parity along with the data and requires all drives but one to be present to operate; drive failure requires replacement, but the array is not destroyed by a single drive failure. Upon drive failure, any subsequent read operations can be calculated from the distributed parity so that the drive failure is masked from the end user. The array will have data loss in the event of a second drive failure and is vulnerable until the data that was on the failing drive is rebuilt onto a replacement drive. A single drive failure in the set will result in reduced performance of the entire set until the failing drive has been replaced and rebuilt.

  RAID 5 requires a minimum number of three hard disk drives.

- **RAID 6**: block-level striping with distributed parity

  RAID 6 uses distributed parity, with two independent parity blocks per stripe, and disk striping. A RAID 6 virtual drive can survive the loss of any two drives without losing data. A RAID 6 drive group is similar to a RAID 5 drive group. Blocks of data and parity information are written across all drives. The parity information is used to recover the data if one or two drives fail in the drive group.

  RAID 6 requires a minimum number of three hard disk drives.

- **RAID 10**: a combination of RAID 0 and RAID 1

  RAID 10 consists of striped data across mirrored spans. A RAID 10 drive group is a spanned drive group that creates a striped set from a series of mirrored drives. RAID 10 allows a maximum of eight spans. You must use an even number of drives in each RAID virtual drive in the span. The RAID 1 virtual drives must have the same stripe size. RAID 10 provides high data throughput and complete data redundancy but uses a larger number of spans.

  RAID 10 requires a minimum number of four hard disk drives and also requires an even number of drives, for example, six hard disk drives or eight hard disk drives.

- **RAID 50**: a combination of RAID 0 and RAID 5

  RAID 50 uses distributed parity and disk striping. A RAID 50 drive group is a spanned drive group in which data is striped across multiple RAID 5 drive groups. RAID 50 works best with data that requires high reliability, high request rates, high data transfers, and medium-to-large capacity.

  Note: Having virtual drives of different RAID levels, such as RAID 0 and RAID 5, in the same drive group is not allowed. For example, if an existing RAID 5 virtual drive is created out of partial space in an array, the next virtual drive in the array has to be RAID 5 only.

  RAID 50 requires a minimum number of six hard disk drives.

- **RAID 60**: a combination of RAID 0 and RAID 6

  RAID 60 uses distributed parity, with two independent parity blocks per stripe in each RAID set, and disk striping. A RAID 60 virtual drive can survive the loss of two drives in each of the RAID 6 sets without losing data. RAID 60 works best with data that requires high reliability, high request rates, high data transfers, and medium-to-large capacity.

  RAID 60 requires a minimum number of six hard disk drives.

For detailed information about RAID, refer to “Introduction to RAID” in the *MegaRAID SAS Software User Guide* on the documentation DVD that comes with your server.

Configuring RAID using the Lenovo ThinkServer Deployment Manager program

Deployment Manager simplifies the process of configuring supported RAID. The help system for the program can be accessed directly from the program interface.

Deployment Manager has the following features for RAID configuration:

- For use with all supported RAID controllers
- Automatically detects hardware and lists all supported RAID configurations
- Configures one or more disk arrays per controller depending on the number of drives attached to the controller and the RAID level selected
- Supports hot-spare drives
- Creates a RAID response file that can be used to configure RAID controllers on similarly configured Lenovo servers

See “Lenovo ThinkServer Deployment Manager” on page 13 and view the help system from the main interface of the program.

Configuring the advanced SATA or SAS hardware RAID

Your server comes with an AnyRAID adapter to provide advanced SATA or SAS hardware RAID functions.

Note: Depending on the operating system, the total drive capacity of the primary RAID might be limited to 2 TB.

You can use the following programs or tools to configure the advanced SATA or SAS hardware RAID.

- MegaRAID Human Interface Infrastructure (HII) configuration utility

  This utility enables you to configure RAID independently of the operating system. To display the HII configuration utility interface, start the server and press the F1 key as soon as you see the logo screen to enter the Setup Utility program. Then, select **Boot Manager → Adapters and UEFI Drivers**.

- MegaRAID Storage Manager program

This program provides graphical user interface (GUI) for you to create and manage storage configurations in an operating system environment.

- Storage Command Line Tool (StorCLI)

  This is a command-line management tool that is used to configure RAID in an operating system environment.

To download the MegaRAID Storage Manager program and StorCLI, go to http://www.lenovo.com/drivers and follow the instructions on the Web page.

For more information about how to configure and manage the advanced SATA or SAS hardware RAID, refer to the *MegaRAID SAS Software User Guide* on the documentation DVD that comes with your server. This document also is available on the Lenovo Web site at:
http://www.lenovo.com/UserManuals

Updating the firmware

When you replace a device in the server, you might have to either update the server with the latest version of the firmware that is stored in memory on the device or reflash the BIOS, the TSM firmware, and the FRU/SDR.

To update the firmware, do one of the following:

- Go to http://www.lenovo.com/drivers and follow the instructions on the Web page to check for the latest level of firmware, such as the BIOS updates and device drivers.
- Use the Lenovo ThinkServer Deployment Manager program. See “Lenovo ThinkServer Deployment Manager” on page 13.

Chapter 6. Replacing hardware

This chapter provides instructions on how to install, remove, or replace hardware for your server.

This chapter contains the following items:

- “Guidelines” on page 59
- “Removing the server cover” on page 61
- “Installing, removing, or replacing hardware” on page 63
- “Completing the parts replacement” on page 165

For a list of ThinkServer options, go to:
http://lenovoquickpick.com/usa/home/thinkserver/rack-and-tower-server

Guidelines

This topic provides some guidelines that you should read and understand before using your server.

Precautions

Before using the server, ensure that you read and understand the following precautions:

- Before using the product, ensure that you read and understand the multilingual safety instructions and the Lenovo Limited Warranty (LLW) on the documentation DVD that comes with the product. Reading and understanding the safety instructions reduces the risk of personal injury and damage to your product.
- When you install your new server, take the opportunity to download and apply the most recent firmware updates. This step will help to ensure that any known issues are addressed and that your server is ready to function at maximum levels of performance. To download firmware updates for your server, go to http://www.lenovo.com/drivers and follow the instructions on the Web page. See “Updating the firmware” on page 57 for more information.
- Before you install optional hardware devices, ensure that the server is working correctly. If the server is not working correctly, see Chapter 7 “Troubleshooting and diagnostics” on page 169 to do basic troubleshooting. If the problem cannot be solved, see Chapter 8 “Getting information, help, and service” on page 175.
- Observe good housekeeping in the area where you are working. Put removed covers and other parts in a safe place.
- If you must turn on the server while the server cover is removed, ensure that no one is near the server and that no tools or other objects have been left inside the server.
- Do not attempt to lift an object that you think is too heavy for you. If you have to lift a heavy object, observe the following precautions:
  - Ensure that you can stand safely without slipping.
  - Distribute the weight of the object equally between your feet.
  - Use a slow lifting force. Never move suddenly or twist when you lift a heavy object.
  - To avoid straining the muscles in your back, lift by standing or by pushing up with your leg muscles.
- Ensure that you have an adequate number of properly grounded electrical outlets for the server, monitor, and other devices.
- Back up all important data before you make changes to drives.
- Have a small flat-blade screwdriver available.

© Copyright Lenovo 2014

- You do not have to turn off the server to install or replace a hot-swap redundant power supply, hot-swap hard disk drives, hot-swap solid-state drives, or hot-plug USB devices. However, you must turn off the server before performing any steps that involve installing, removing, or replacing adapter cables or non-hot-swap devices or components.
- To view the LEDs on the system board and internal components, leave the server connected to power.
- When you are finished working on the server, reinstall all safety shields, guards, labels, and ground wires.

Handling static-sensitive devices

Attention: Do not open the static-protective package that contains the new part until the defective part has been removed from the server and you are ready to install the new part. Static electricity, although harmless to you, can seriously damage server components and parts.

When you handle server parts and components, take these precautions to avoid static-electricity damage:

- Limit your movement. Movement can cause static electricity to build up around you.
- The use of a grounding system is recommended. For example, it is recommended to wear an electrostatic discharge (ESD) wrist strap, if one is available. Ensure that you work in an ESD-safe area.
- Always carefully handle the parts and other components (such as PCI cards, memory modules, system boards, and microprocessors) by edges or frame. Do not touch solder joints, pins, or exposed circuitry.
- Do not leave the device where others can handle and possibly damage the device.
- Before you replace a new part, touch the static-protective package containing the new part to an unpainted metal part of the server for at least two seconds. This reduces static electricity from the package and your body.
- Remove the new part from the static-protective package and directly install it in the server without placing it on any other surface. If it is hard for you to do this in your specific situation, place the static-protective package of the new part on a smooth, level surface, and then place the new part on the static-protective package.
- Do not place the part on the server cover or other metal surface.
- Take additional care when handling devices during cold weather. Heating reduces indoor humidity and increases static electricity.

System reliability guidelines

To help ensure proper cooling and system reliability, strictly follow these guidelines:

- Each of the drive bays has a drive or a dummy tray installed; or there is an electromagnetic interface (EMI) protective panel or EMI shield installed to protect the drive cage.
- If the server supports hot-swap redundant power supplies, each of the power supply bay has a redundant power supply installed, or one bay has a redundant power supply installed while the other bay is covered by a shield.
- Leave adequate space around the server to ensure that the server cooling system works well. Leave approximately 50 mm (2 inches) of open space around the front and rear of the server. Do not place objects in front of the fans. For proper cooling and airflow, install the server cover before you turn on the server. Operating the server with the server cover removed might damage server components.
- Properly route the cables. For some options, such as PCI cards, follow the cabling instructions that come with the options in addition to the instructions in this manual.
- When replacing a hot-swap drive, install the new hot-swap drive as soon as possible.
- If your server has air ducts or air baffles, do not remove them while the server is running. Operating the server without the air ducts or air baffles might cause the microprocessor(s) to overheat.

- For servers that support up to two microprocessors, ensure that the second microprocessor socket always contains a microprocessor or is protected by a microprocessor socket cover.

Working inside the server with the power on

Attention: Static electricity that is released to internal server components when the server is turned on might cause the server to halt, which might result in the loss of data. To avoid this potential problem, always use an ESD wrist strap or other grounding system when you work inside the server with the power on.

The server supports hot-swap devices and is designed to operate safely while it is turned on and the cover is removed. Follow these guidelines when you work inside the server with the power on:

- Avoid wearing loose-fitting clothing on your forearms. Button long-sleeved shirts before working inside the server; do not wear cuff links while you are working inside the server.
- Do not allow your necktie or scarf to hang inside the server.
- Remove jewelry, such as bracelets, necklaces, rings, and loose-fitting wrist watches.
- Remove items from your shirt pocket, such as pens and pencils. These items might fall into the server as you lean over it.
- Avoid dropping any metallic objects into the server, such as paper clips, hairpins, and screws.

Removing or extending the server from the rack cabinet

If the server is installed in a rack cabinet, remove or extend the server from the rack cabinet before installing or replacing hardware. Depending on the rail type, do one of the following:

- If the server is installed in a rack cabinet using static rails, remove the server from the rack cabinet and place it on a flat, clean, and static-protective surface. See the *Rack Installation Instructions* that comes with the server.
- If the server is installed in a rack cabinet using slide rails, press the rack handles to extend the server from the rack cabinet. However, if the working environment, cabling configuration, or the server location in the rack cabinet creates awkward conditions, remove the server from the rack cabinet. See the *Rack Installation Instructions* that comes with the server.

Removing the server cover

Attention: Do not open your server or attempt any repair before reading and understanding “Safety information” on page iii and “Guidelines” on page 59.

Before you begin, print all the related instructions or ensure that you can view the PDF version on another computer for reference.

Note: Depending on the model, your server might look different from the illustrations in this topic.

To remove the server cover, do the following:

1. Remove all media from the drives. Then, turn off all attached devices and the server.
2. Disconnect all power cords from electrical outlets.
3. Disconnect the power cords, Input/Output (I/O) cables, and all other cables that are connected to the server.
4. Prepare your server. See “Removing or extending the server from the rack cabinet” on page 61.

5. Use a screw driver to unscrew the cover lock to the open position as shown.

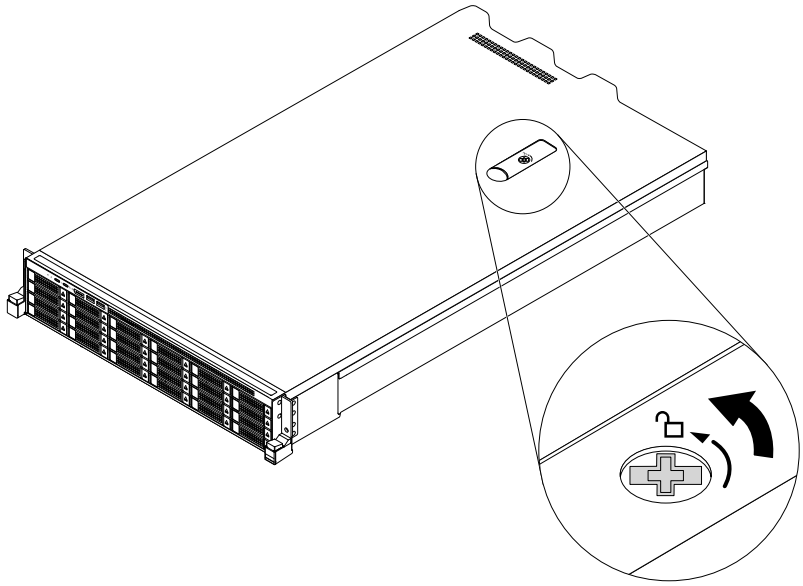

Figure 27. Unscrewing the cover lock

6. Fully open the cover latch as shown and slide the server cover to the rear until it is disengaged from the chassis. Then, lift the server cover off the chassis and set it aside.

   Note: It is recommended that you wait several minutes to let the server cool before removing the server cover.

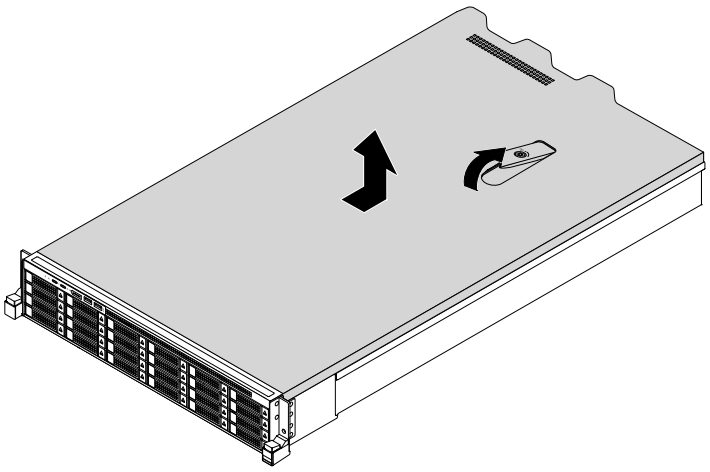

Figure 28. Removing the server cover

Attention: For proper cooling and airflow, install the server cover before turning on the server. Operating the server with the server cover removed might damage server components.

To reinstall the server cover, see “Reinstalling the server cover and reconnecting cables” on page 165.

Installing, removing, or replacing hardware

This topic provides instructions on how to install, remove, or replace hardware for your server. You can expand the capabilities of your server by adding new hardware devices, such as memory modules, PCIe cards, or other server options, and maintain your server by replacing the failing hardware devices.

If you are handling a server option, refer to the appropriate installation and or removal instructions in this topic along with the instructions that come with the option.

Notes:

- Use only parts provided by Lenovo.
- Depending on the model, your server might look slightly different from the illustrations in this topic.

The EMI integrity and cooling of the server are protected by having all drive bays and PCI card slots covered or occupied. When you install an internal drive or a PCI card, save the EMI shield or dummy tray from the drive bay or save the PCI card slot bracket in the event that you later remove the device.

Attention: An unoccupied drive bay or PCIe card slot without a cover, shield, dummy tray, filler, or any other protection might impact the EMI integrity and cooling of the server, which might result in overheating or component damage.

Removing and reinstalling the rack handles

Attention: Do not open your server or attempt any repair before reading and understanding “Safety information” on page iii and “Guidelines” on page 59.

Before you begin, print all the related instructions or ensure that you can view the PDF version on another computer for reference.

Note: Depending on the model, your server might look different from the illustrations in this topic.

To remove and reinstall the rack handles, do the following:

1. On each side of the server, remove the screws that secure the rack handle and then remove the rack handle from the chassis.

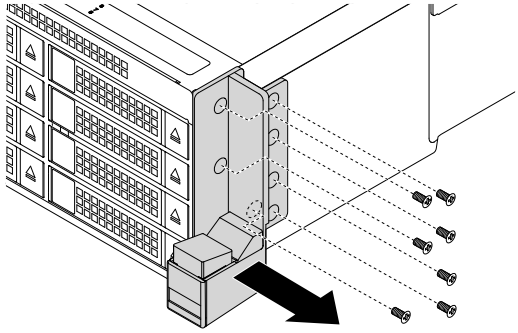

Figure 29. Removing the rack handles

2. To reinstall the rack handles, align the screw holes in the rack handle with the corresponding holes in the chassis. Install the screws to secure the rack handle on each side of the server.

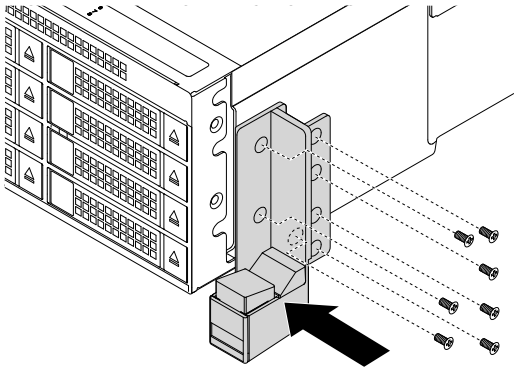

Figure 30. Installing the rack handles

Removing and reinstalling the cooling shroud

Attention: Do not open your server or attempt any repair before reading and understanding “Safety information” on page iii and “Guidelines” on page 59.

To access some of the server components on the system board, remove the cooling shroud first. To ensure proper cooling and airflow, reinstall the cooling shroud before turning on the server.

Before you begin, print all the related instructions or ensure that you can view the PDF version on another computer for reference.

To remove and reinstall the cooling shroud, do the following:

1. Remove all external media from the drives and turn off all attached devices and the server. Then, disconnect all power cords from electrical outlets and disconnect all cables that are connected to the server.
2. Prepare your server. See “Removing or extending the server from the rack cabinet” on page 61.
3. Remove the server cover. See “Removing the server cover” on page 61.
4. Remove the ThinkServer RAID Super Capacitor Module if one is installed on the cooling shroud. See “Removing the ThinkServer RAID Super Capacitor Module” on page 130.

5. Insert your fingers into the holes **1** in the cooling shroud and lift it out of the server.

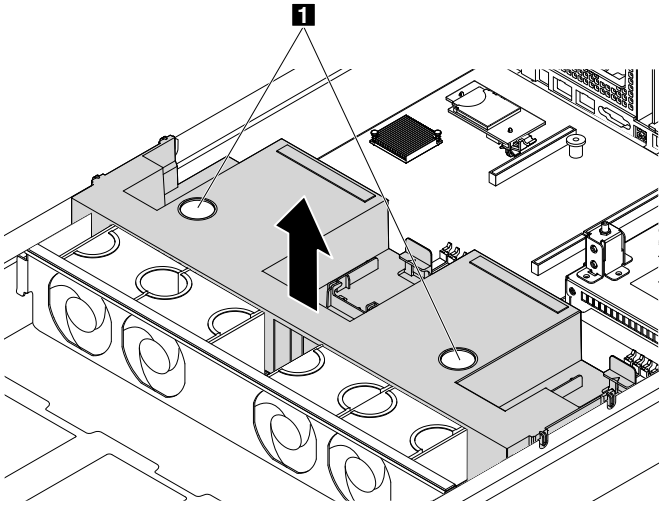

Figure 31. Removing the cooling shroud

6. To reinstall the cooling shroud, do the following:
   a. Ensure that:
      - All components have been reassembled correctly.
      - No tools or loose screws are left inside your server.
      - All cables inside the server have been properly routed and they will not interfere with installing the cooling shroud.
   b. Note the orientation of the cooling shroud. Align the tabs on both sides of the cooling shroud with the corresponding holes or gaps in both sides of the chassis.
   c. Lower the cooling shroud into the chassis until it snaps into position.

   Note: If necessary, gently press the cooling shroud on both sides so that the tabs on the cooling shroud completely engage with both sides of the chassis.

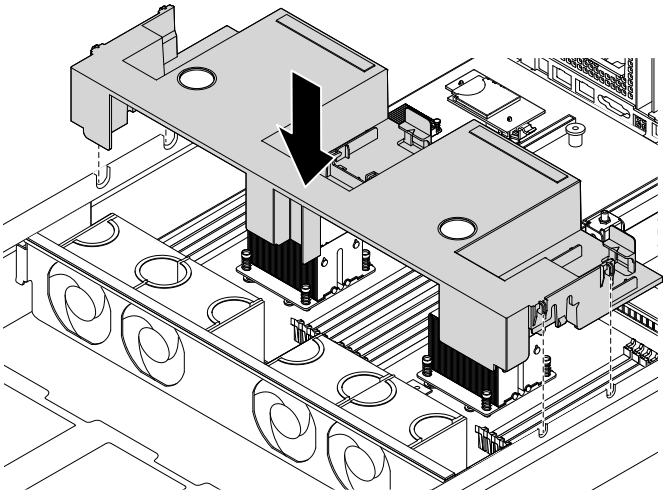

Figure 32. Installing the cooling shroud

Attention: For proper cooling and airflow, reinstall the cooling shroud before turning on the server. Operating the server with the cooling shroud removed might damage server components.

What to do next:

- To work with another piece of hardware, go to the appropriate section.
- To complete the replacement, go to “Completing the parts replacement” on page 165.

Installing or replacing a system fan

Attention: Do not open your server or attempt any repair before reading and understanding “Safety information” on page iii and “Guidelines” on page 59.

Your server supports up to four non-hot-swap system fans. To locate the system fans, see “System board components” on page 38.

CAUTION:
Hazardous moving parts. Keep fingers and other body parts away.

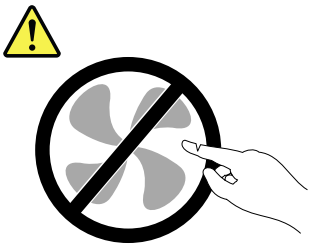

Before you begin, print all the related instructions or ensure that you can view the PDF version on another computer for reference.

Note: Depending on the model, your server might look slightly different from the illustrations in this topic.

To install or replace a system fan, do the following:

1. Remove all external media from the drives and turn off all attached devices and the server. Then, disconnect all power cords from electrical outlets and disconnect all cables that are connected to the server.
2. Prepare your server. See “Removing or extending the server from the rack cabinet” on page 61.
3. Remove the server cover. See “Removing the server cover” on page 61.
4. Remove the cooling shroud. See “Removing and reinstalling the cooling shroud” on page 64.
5. Do one of the following:

- If you are installing a system fan, grasp the top of the dummy fan with your index finger and thumb and then lift the dummy fan out of the server.

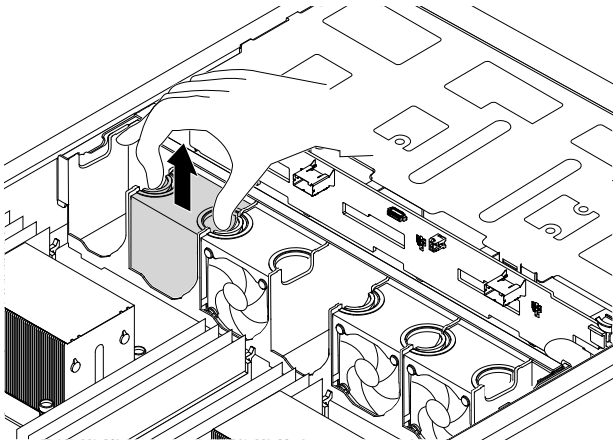

Figure 33. Removing the dummy fan

- If you are replacing a system fan, disconnect the failing fan from the system board. Then, grasp the top of the fan with your index finger and thumb and lift the fan out of the server.

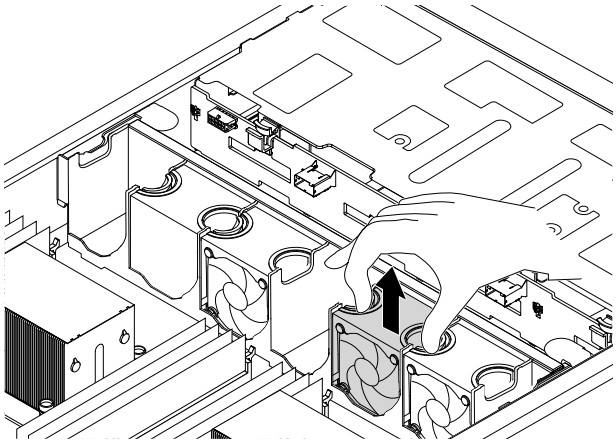

Figure 34. Removing the system fan

6. Touch the static-protective package that contains the new system fan to any unpainted surface on the outside of the server. Then, remove the new system fan from the package.

7. Install the new system fan into the system fan cage so that the system fan cable on the bottom of the new system fan is facing the rear of the chassis. Then, connect the system fan cable to the corresponding system fan connector on the system board. See “System board components” on page 38.

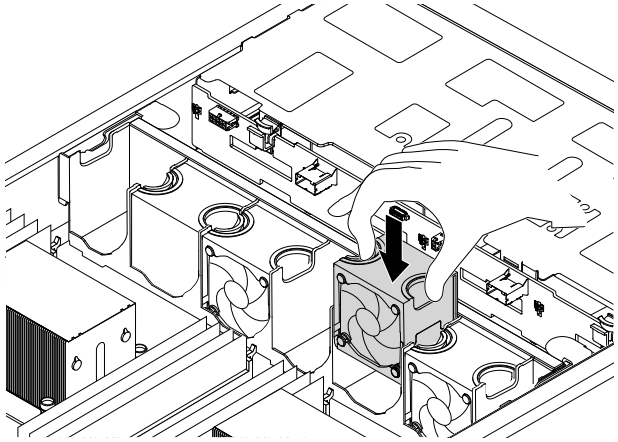

Figure 35. Installing the system fan

8. If you are instructed to return the old system fan, follow all packaging instructions and use any packaging materials that are supplied to you for shipping.

What to do next:

- To work with another piece of hardware, go to the appropriate section.
- To complete the replacement, go to “Completing the parts replacement” on page 165.

Removing and reinstalling the system fan cage

Attention: Do not open your server or attempt any repair before reading and understanding “Safety information” on page iii and “Guidelines” on page 59.

Before you begin, print all the related instructions or ensure that you can view the PDF version on another computer for reference.

To remove and reinstall the system fan cage, do the following:

1. Remove all external media from the drives and turn off all attached devices and the server. Then, disconnect all power cords from electrical outlets and disconnect all cables that are connected to the server.
2. Prepare your server. See “Removing or extending the server from the rack cabinet” on page 61.
3. Remove the server cover. See “Removing the server cover” on page 61.
4. Remove the cooling shroud. See “Removing and reinstalling the cooling shroud” on page 64.
5. Remove the system fans. See “Installing or replacing a system fan” on page 66.

6. Pivot the tabs to the rear of the server. Then, remove the system fan cage by lifting the cage straight up and out of the chassis.

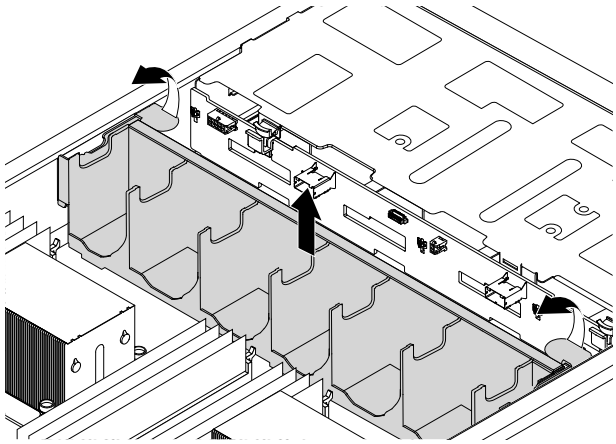

Figure 36. Removing the system fan cage

7. Note the orientation of the system fan cage. Align the left and right sides of the system fan cage with the corresponding mounting posts in the chassis. Then, press the system fan cage straight down into the chassis.

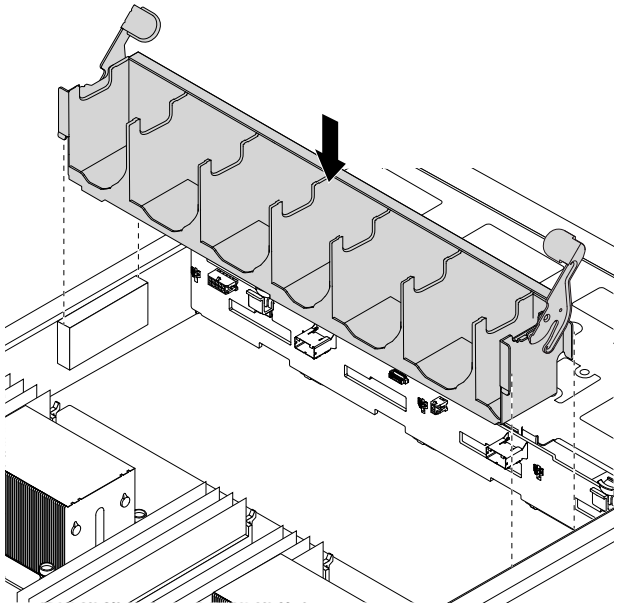

Figure 37. Installing the system fan cage

8. Pivot the tabs of the system fan cage to the front of the server to secure the system fan cage.

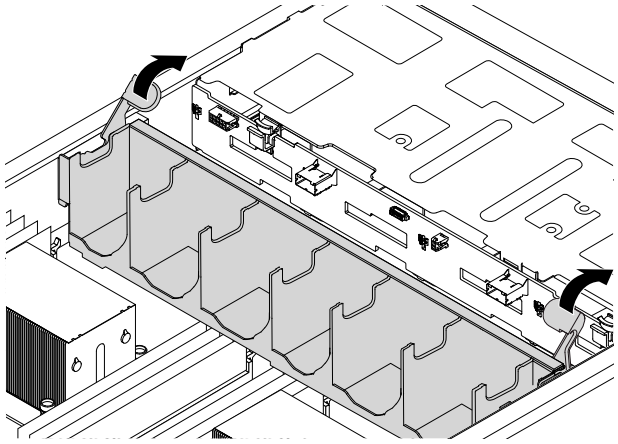

Figure 38. Securing the system fan cage

What to do next:

- To work with another piece of hardware, go to the appropriate section.
- To complete the replacement, go to "Completing the parts replacement" on page 165.

Installing or removing a memory module

This topic provides instructions on how to install or remove a memory module.

Note: The memory modules are extremely sensitive to ESD. Ensure that you read and understand "Handling static-sensitive devices" on page 60 first and carefully perform the operation.

Memory module installation rules

Your server has 16 memory slots and it has the following features:

- Each slot supports 4 GB, 8 GB, and 16 GB double data rate 4 registered dual inline memory modules (DDR4 RDIMMs) with Error Checking and Correcting (ECC) technology.
- Each slot supports 32 GB double data rate 4 load reduction dual inline memory modules (DDR4 LRDIMMs) with Error Checking and Correcting (ECC) technology.
- Your server supports up to 8 memory modules when one microprocessor is installed. Supports up to 16 memory modules when two microprocessors are installed.
- The minimum system memory is 4 GB (only one microprocessor installed and only one 4 GB RDIMM installed in the CPU1 DIMMA1 slot).
- The maximum system memory is 512 GB (two microprocessors installed and one 32 GB LRDIMM installed in each of the 16 memory slots).

For more information about the memory modules in your specific server model, use the Setup Utility program. See "Viewing information in the Setup Utility program" on page 47.

For a list of the supported ThinkServer memory module options, go to:
http://lenovoquickpick.com/usa/home/thinkserver/rack-and-tower-server

Before installing a memory module, ensure that you observe the following guidelines:

- All memory modules to be installed must be the same type. Your server supports the following types of memory modules:
  - DDR4 RDIMM with ECC technology
  - DDR4 LRDIMM with ECC technology
- When you install memory modules with different ranks in one channel, start from the farthest memory slot in the channel. Install the memory module that has the most ranks first.
- When you install memory modules with different frequencies into the memory slots for the same microprocessor, all the memory modules run at the lowest frequency.
- It is recommended that you install the high-frequency memory modules into the memory slots for the same microprocessor to ensure high performance.

The following illustration helps you to locate the memory slots on the system board. The following illustration shows the system board with two installed microprocessors (also known as CPU).

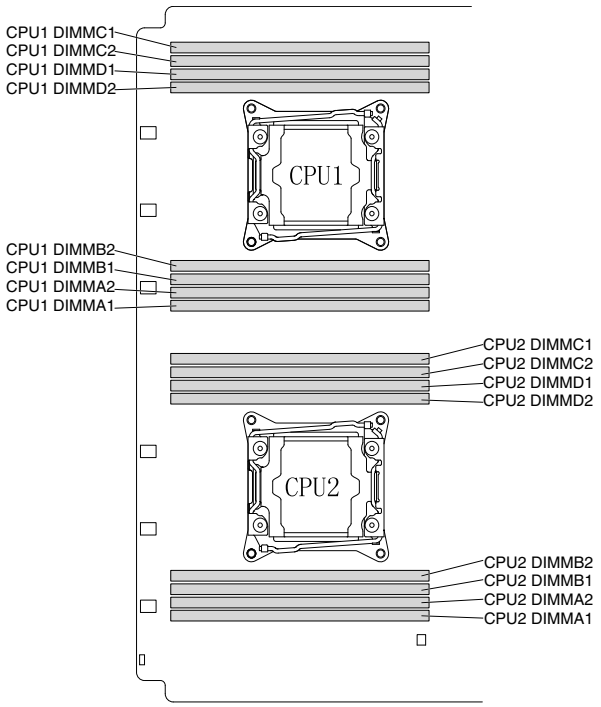

Figure 39. Memory slots on the system board

The following table provides information about the memory module installation rules for servers that have only one microprocessor (CPU1) installed. The “X” mark indicates the memory slots into which the memory modules should be installed in different situations.

Table 1. Memory module installation rules for servers with one microprocessor

CPU1 DIMM	A1	A2	B1	B2	C1	C2	D1	D2
1 DIMM	X							
2 DIMMs	X		X					
4 DIMMs	X		X		X		X	
8 DIMMs	X	X	X	X	X	X	X	X

The following table provides information about the memory module installation rules for servers that have two microprocessors (CPU1 and CPU2) installed. The “X” mark indicates the memory slots into which the memory modules should be installed in different situations.

Table 2. Memory module installation rules for servers with two microprocessors

	CPU1 DIMM								CPU2 DIMM							
	A1	**A2**	**B1**	**B2**	**C1**	**C2**	**D1**	**D2**	**A1**	**A2**	**B1**	**B2**	**C1**	**C2**	**D1**	**D2**
2 DIMMs	X								X							
4 DIMMs	X		X						X		X					
8 DIMMs	X		X		X		X		X		X		X		X	
16 DIMMs	X	X	X	X	X	X	X	X	X	X	X	X	X	X	X	X

The following section explains the memory module installation rules in independent mode, mirroring mode, sparing mode, and lockstep mode.

Memory module installation order in independent mode

In independent mode, the RAS features are not available. For more information about the RAS features, refer to the related section in “Features” on page 7.

Notes:

- All memory modules to be installed must be the same type.
- When you install memory modules with different capacity, install the memory module that has the highest capacity first.

The following table explains the memory module installation order for servers that have only one microprocessor (CPU1) installed.

Table 3. Memory module installation order in independent mode for servers with one microprocessor

CPU1 DIMM	**A1**	**A2**	**B1**	**B2**	**C1**	**C2**	**D1**	**D2**
DIMM installation order	1	5	2	6	3	7	4	8

The following table explains the memory module installation order for servers that have two microprocessors (CPU1 and CPU2) installed.

Table 4. Memory module installation order in independent mode for servers with two microprocessors

	CPU1 DIMM								CPU2 DIMM							
	A1	A2	B1	B2	C1	C2	D1	D2	A1	A2	B1	B2	C1	C2	D1	D2
DIMM installation order	1	9	3	11	5	13	7	15	2	10	4	12	6	14	8	16

Memory module installation order in mirroring mode

In mirroring mode, the server maintains two identical copies of all data in memory and the RAS features are available. For more information about the RAS features, refer to the related section in “Features” on page 7.

Notes:

- All memory modules to be installed must be the same type with the same capacity, frequency, voltage, and number of ranks.
- All memory modules must be installed in pairs.

The following table explains the memory module installation order for servers that have only one microprocessor (CPU1) installed.

Table 5. Memory module installation order in mirroring mode for servers with one microprocessor

CPU1 DIMM	A1	A2	B1	B2	C1	C2	D1	D2
DIMM installation order	1	3	1	3	2	4	2	4

The following table explains the memory module installation order for servers that have two microprocessors (CPU1 and CPU2) installed.

Table 6. Memory module installation order in mirroring mode for servers with two microprocessors

	CPU1 DIMM								CPU2 DIMM							
	A1	A2	B1	B2	C1	C2	D1	D2	A1	A2	B1	B2	C1	C2	D1	D2
DIMM installation order	1	5	1	5	3	7	3	7	2	6	2	6	4	8	4	8

Memory module installation order in sparing mode

The sparing mode provides memory redundancy. In this mode, the RAS features are available. For more information about the RAS features, refer to the related section in “Features” on page 7.

Note: All memory modules to be installed must be the same type with the same capacity, frequency, voltage, and number of ranks.

Your server supports rank sparing mode. In rank sparing mode, one rank of a memory module works as the spare rank for the other ranks on the same channel. The spare rank is not available as system memory. To enable rank sparing mode, ensure that:

- At least three ranks are available in one channel.
- At least two memory modules are installed in one channel.

The following table explains the memory module installation order for servers that have only one microprocessor (CPU1) installed.

Table 7. Memory module installation order in sparing mode for servers with one microprocessor

CPU1 DIMM	A1	A2	B1	B2	C1	C2	D1	D2
DIMM installation order	1	1	2	2	3	3	4	4

The following table explains the memory module installation order for servers that have two microprocessors (CPU1 and CPU2) installed.

Table 8. Memory module installation order in sparing mode for servers with two microprocessors

	CPU1 DIMM								CPU2 DIMM							
	A1	A2	B1	B2	C1	C2	D1	D2	A1	A2	B1	B2	C1	C2	D1	D2
DIMM installation order	1	1	3	3	5	5	7	7	2	2	4	4	6	6	8	8

Memory module installation order in lockstep mode

In lockstep mode, the RAS features are available. For more information about the RAS features, refer to the related section in “Features” on page 7.

Notes:

- All memory modules to be installed must be the same type with the same capacity, frequency, voltage, and number of ranks.
- All memory modules must be installed in pairs.

The following table explains the memory module installation order for servers that have only one microprocessor (CPU1) installed.

Table 9. Memory module installation order in lockstep mode for servers with one microprocessor

CPU1 DIMM	A1	A2	B1	B2	C1	C2	D1	D2
DIMM installation order	1	3	1	3	2	4	2	4

The following table explains the memory module installation order for servers that have two microprocessors (CPU1 and CPU2) installed.

Table 10. Memory module installation order in lockstep mode for servers with two microprocessors

	CPU1 DIMM								CPU2 DIMM							
	A1	A2	B1	B2	C1	C2	D1	D2	A1	A2	B1	B2	C1	C2	D1	D2
DIMM installation order	1	5	1	5	3	7	3	7	2	6	2	6	4	8	4	8

Installing a memory module

Attention: Do not open your server or attempt any repair before reading and understanding “Safety information” on page iii and “Guidelines” on page 59.

Before you begin, print all the related instructions or ensure that you can view the PDF version on another computer for reference.

Notes:

- Ensure that you consider and follow the memory module installation rules when performing the operation. See “Memory module installation rules” on page 70.
- Use any documentation that comes with the memory module and follow those instructions in addition to the instructions in this topic.

To install a memory module, do the following:

1. Remove all external media from the drives and turn off all attached devices and the server. Then, disconnect all power cords from electrical outlets and disconnect all cables that are connected to the server.
2. Prepare your server. See “Removing or extending the server from the rack cabinet” on page 61.
3. Remove the server cover. See “Removing the server cover” on page 61.
4. Remove the cooling shroud. See “Removing and reinstalling the cooling shroud” on page 64.
5. Locate the memory slots on the system board and read the memory module installation rules. See “Memory module installation rules” on page 70. Remove the memory dummy if one is installed. See “Removing a memory module” on page 76.
6. Disconnect any cables that might impede your access to the memory slots.
7. Open the retaining clips of the appropriate memory slot.

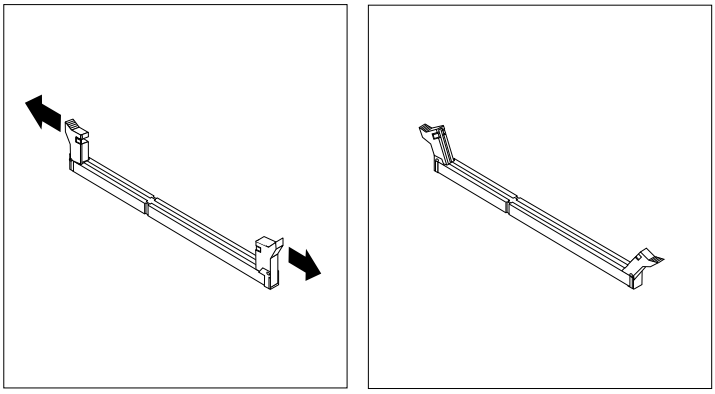

Figure 40. Opening the retaining clips of the memory slot

8. Touch the static-protective package that contains the new memory module to any unpainted surface on the outside of the server. Then, take the new memory module out of the package.

   Note: Carefully handle the memory module by its edges.

9. Position the new memory module over the memory slot. Ensure that the notch 1 on the new memory module is aligned with the key 2 in the memory slot. Then, press the new memory module straight down into the memory slot until the retaining clips close and the new memory module snaps into position.

   Note: If there is a gap between the memory module and the retaining clips, the memory module has not been correctly installed. Open the retaining clips, remove the memory module, and then reinstall it into the memory slot until the retaining clips are completely closed.

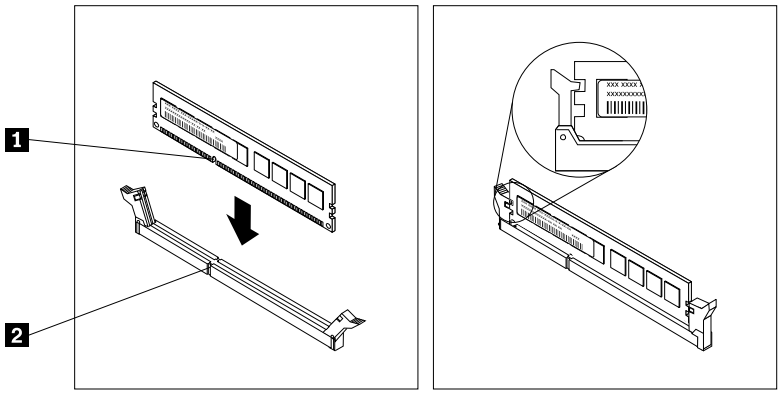

Figure 41. Installing a memory module

10. Reconnect any cables that you have disconnected.

What to do next:

- To work with another piece of hardware, go to the appropriate section.
- To complete the installation, go to "Completing the parts replacement" on page 165.

Removing a memory module

Attention: Do not open your server or attempt any repair before reading and understanding "Safety information" on page iii and "Guidelines" on page 59.

Before you begin, print all the related instructions or ensure that you can view the PDF version on another computer for reference.

Note: Ensure that you consider and follow the memory module installation rules when performing the operation. See "Memory module installation rules" on page 70.

To remove a memory module, do the following:

1. Remove all external media from the drives and turn off all attached devices and the server. Then, disconnect all power cords from electrical outlets and disconnect all cables that are connected to the server.
2. Prepare your server. See "Removing or extending the server from the rack cabinet" on page 61.
3. Remove the server cover. See "Removing the server cover" on page 61.
4. Remove the cooling shroud. See "Removing and reinstalling the cooling shroud" on page 64.
5. Locate the memory slots on the system board and read the memory module installation rules. See "Memory module installation rules" on page 70.
6. Disconnect any cables that might impede your access to the memory slots.

7. Locate the memory module that you want to remove and open the retaining clips on both ends of the memory slot. Then, grasp the memory module by its edges and carefully pull it straight up to remove it from the memory slot.

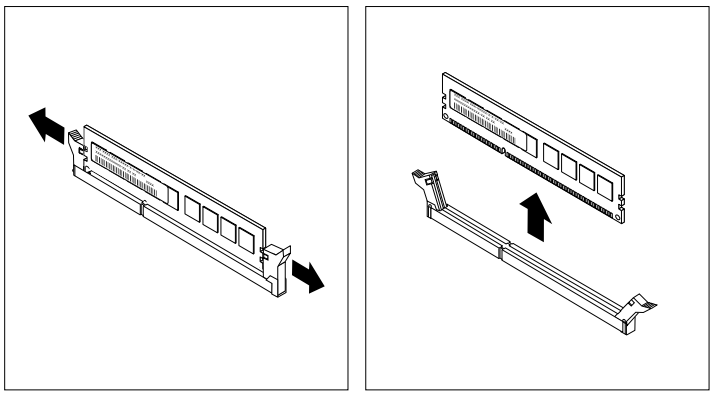

Figure 42. Removing a memory module

8. If you are instructed to return the old memory module, follow all packaging instructions and use any packaging materials that are supplied to you for shipping.

What to do next:

- To work with another piece of hardware, go to the appropriate section.
- To complete the removal procedure, go to "Completing the parts replacement" on page 165.

Replacing the riser card

Attention: Do not open your server or attempt any repair before reading and understanding "Safety information" on page iii and "Guidelines" on page 59.

Before you begin, print all the related instructions or ensure that you can view the PDF version on another computer for reference.

Note: The following procedure is based on the scenario that the riser card is installed on the riser card bracket 1. The procedure is similar for riser card installed on the riser card bracket 2.

To replace the riser card, do the following:

1. Remove all external media from the drives and turn off all attached devices and the server. Then, disconnect all power cords from electrical outlets and disconnect all cables that are connected to the server.
2. Prepare your server. See "Removing or extending the server from the rack cabinet" on page 61.
3. Remove the server cover. See "Removing the server cover" on page 61.

4. Loosen the screw that secures the riser card assembly. Then, grasp the assembly by its edges and carefully lift it straight up and off the chassis.

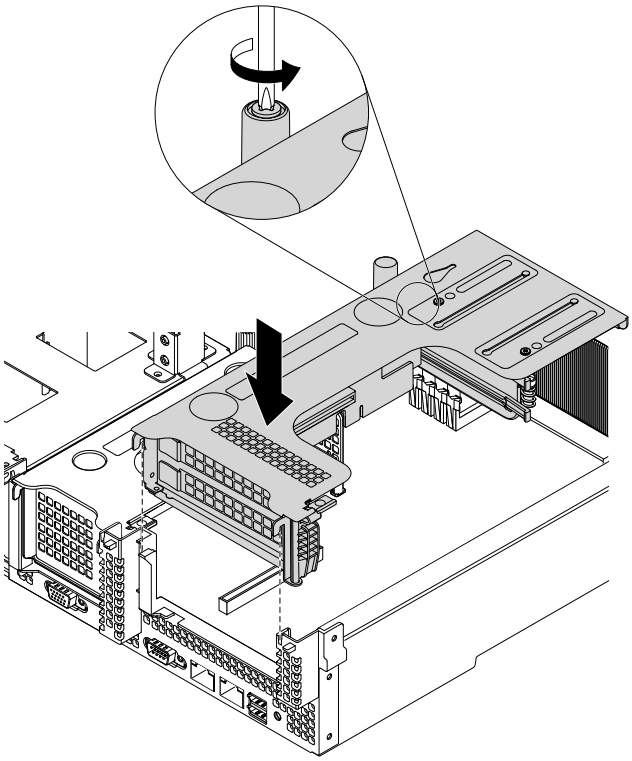

Figure 43. Removing the riser card assembly from the chassis

5. If there is any PCIe card installed on the riser card, record the cable connections first. Then, disconnect all cables from the cards and completely remove the riser card assembly out of the chassis.
6. Remove the PCIe cards that are installed on the riser card. See “Removing a PCIe card from the riser card assembly” on page 90.

7. Remove the two screws that secure the failing riser card. Then, remove the failing riser card from the bracket.

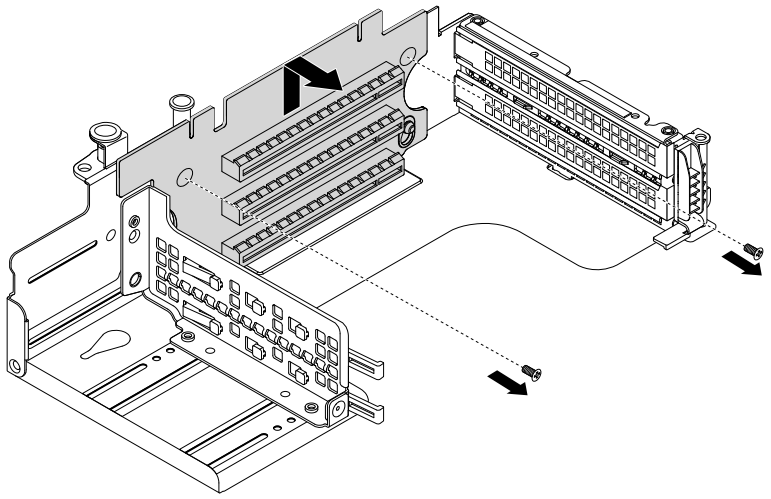

Figure 44. Removing the riser card

8. Touch the static-protective package that contains the new riser card to any unpainted surface on the outside of the server. Then, remove the new riser card from the package.
9. Align the screw holes in the new riser card with the corresponding ones in the bracket.

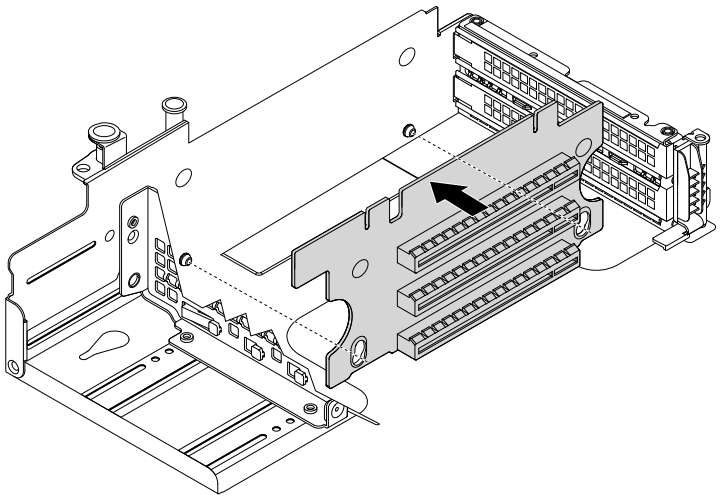

Figure 45. Installing the riser card

10. Install the two screws to secure the riser card to the bracket.

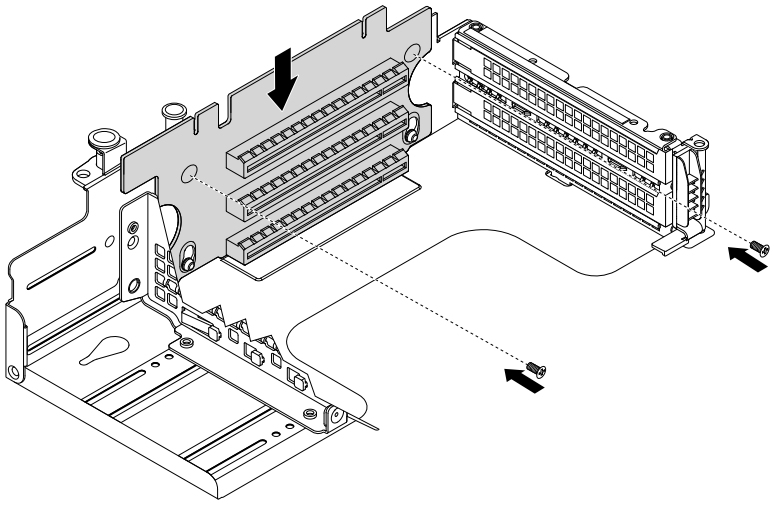

Figure 46. Installing the screws to secure the riser card

11. Reinstall the PCIe cards on the new riser card. See “Installing a PCIe card on the riser card assembly” on page 85.
12. Refer to your note to reconnect any cables to the PCIe cards on the new riser card. You also can refer to “Connecting cables” on page 44 for information about cable connections.

13. Align the mounting stud on the system board with the corresponding hole in the riser card bracket. Align the rear of the riser card assembly with the corresponding rail guides in the rear of the chassis. Then, carefully press the riser card assembly straight down into the chassis until it is fully seated.

    Note: Carefully fit the installed PCIe cards into the chassis and properly route any cables from the cards.

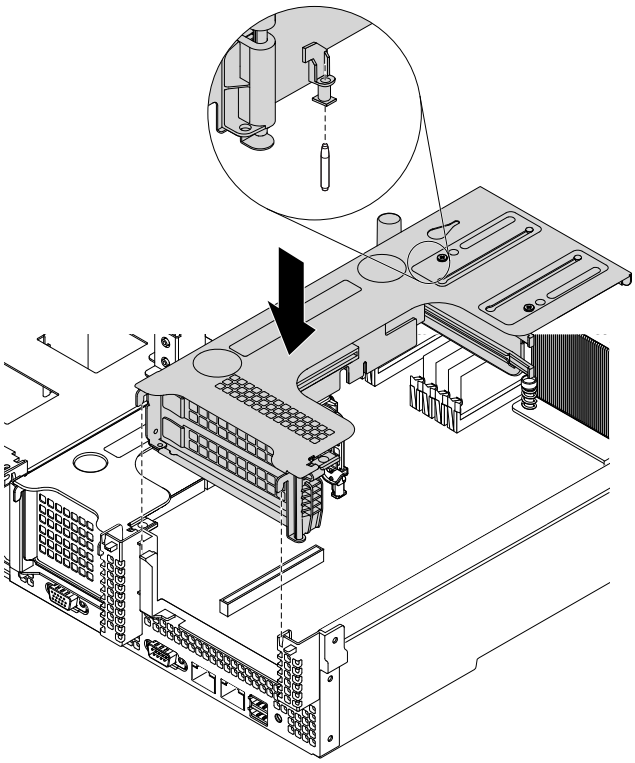

Figure 47. Installing the riser card assembly

14. Tighten the screw to secure the riser card assembly to the system board.

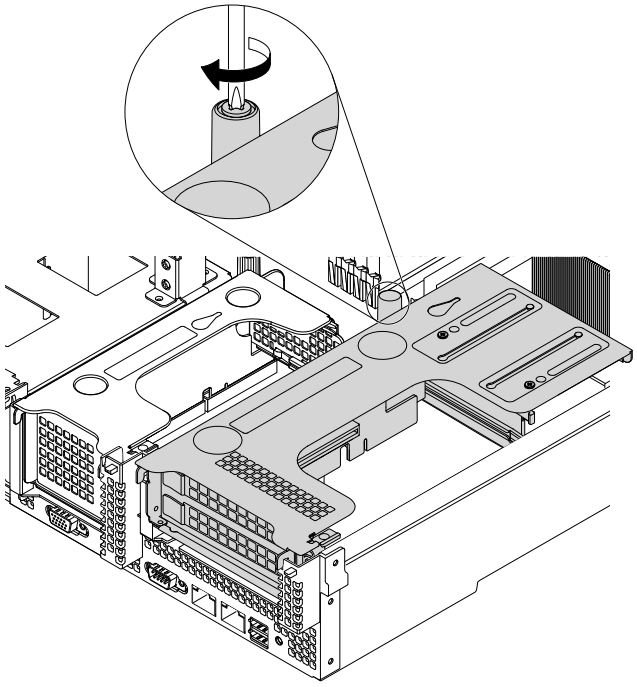

Figure 48. Tightening the screw

15. If you are instructed to return the old riser card, follow all packaging instructions and use any packaging materials that are supplied to you for shipping.

What to do next:

- To work with another piece of hardware, go to the appropriate section.
- To complete the replacement, go to "Completing the parts replacement" on page 165.

Installing or removing a PCI Express card: Ethernet card, RAID card, and other supported types of PCI Express cards

This topic provides instructions on how to install or remove a PCI Express (PCIe) card, such as an Ethernet card, a RAID card, and any other supported PCIe cards.

This topic contains the following information:

- "Installing a PCIe card" on page 82
- "Removing a PCIe card" on page 90

Note: The PCIe card is extremely sensitive to ESD. Ensure that you read and understand "Handling static-sensitive devices" on page 60 first and carefully perform the operation.

Installing a PCIe card

This topic contains the following information:

- "Adjusting the card-retaining bracket" on page 83
- "Installing a PCIe card on the riser card assembly" on page 85

- “Installing a PCIe card on the system board” on page 87

Adjusting the card-retaining bracket

Attention: Do not open your server or attempt any repair before reading and understanding “Safety information” on page iii and “Guidelines” on page 59.

Note: This topic applies when the length of the PCIe card to be installed is either of the following:

- 176.4 mm (6.94 inches)
- From 185 mm (7.28 inches) to 220 mm (8.66 inches)

To adjust the card-retaining bracket, do the following:

1. Remove the three screws that secure the card-retaining bracket. Then, move the card-retaining bracket to the direction as shown.

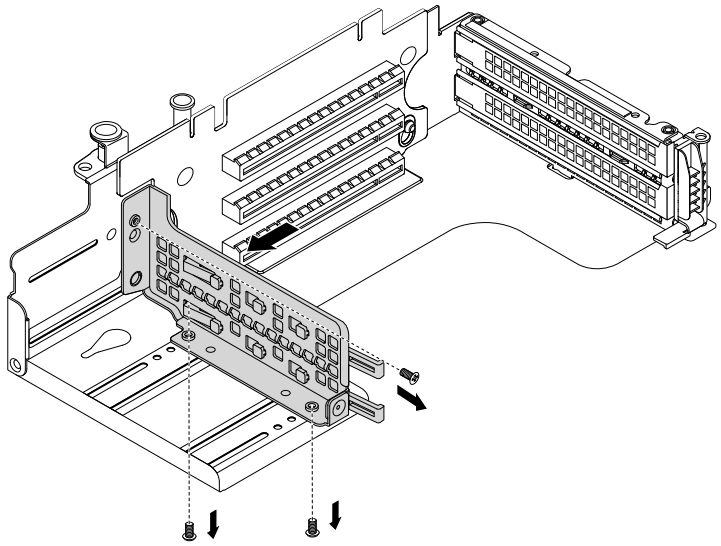

Figure 49. Removing the screws to adjust the card-retaining bracket

2. Do one of the following:

- If the length of the PCIe card is 176.4 mm (6.94 inches), align the screw holes in the card-retaining bracket with the corresponding ones in the riser card bracket. Then, install the three screws to secure the card-retaining bracket.

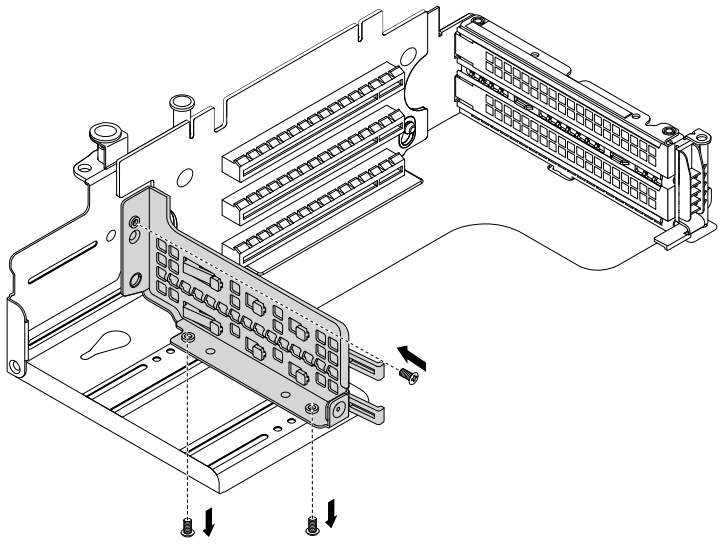

Figure 50. Securing the card-retaining bracket for 176.4 mm (6.94 inches) PCIe cards

- If the length of the PCIe card is between 185 mm (7.28 inches) and 220 mm (8.66 inches), move the card-retaining bracket to an appropriate position. Then, install the three screws to secure the card-retaining bracket.

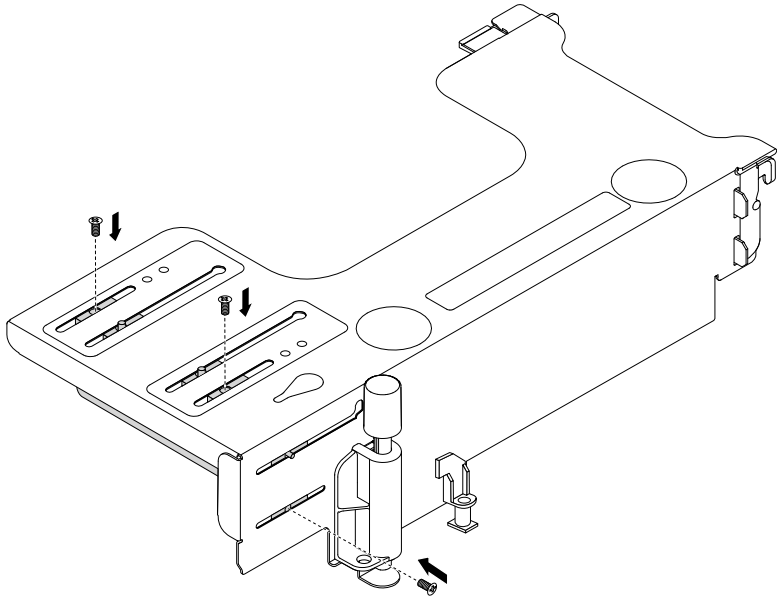

Figure 51. Securing the card-retaining bracket for PCIe cards between 185 mm (7.28 inches) and 220 mm (8.66 inches)

Installing a PCIe card on the riser card assembly

Attention: Do not open your server or attempt any repair before reading and understanding "Safety information" on page iii and "Guidelines" on page 59.

Before you begin, print all the related instructions or ensure that you can view the PDF version on another computer for reference.

Notes:

- Depending on the specific type, the PCIe card might look different from the illustrations in this topic.
- Use any documentation that comes with the PCIe card and follow those instructions in addition to the instructions in this topic.

The following procedure is based on the scenario that you want to install a full-height, half-length PCIe card on the riser card. The procedure is similar if you want to install a low-profile PCIe card on the riser card.

To install a PCIe card on the riser card assembly, do the following:

1. Remove all external media from the drives and turn off all attached devices and the server. Then, disconnect all power cords from electrical outlets and disconnect all cables that are connected to the server.
2. Prepare your server. See "Removing or extending the server from the rack cabinet" on page 61.
3. Remove the server cover. See "Removing the server cover" on page 61.
4. Remove the riser card assembly and lay it upside down on a flat, clean, and static-protective surface. See "Replacing the riser card" on page 77.

   Note: A PCIe card can be installed in any PCIe slot that supports it. See "Rear view of the server" on page 23 to identify the PCIe slots of your server.
5. Locate an appropriate PCIe slot. Press the tab to pivot the card latch to the open position. Then, remove the PCIe slot bracket from the riser card assembly. Store the bracket in case that you later remove the PCIe card and need the bracket to cover the place.

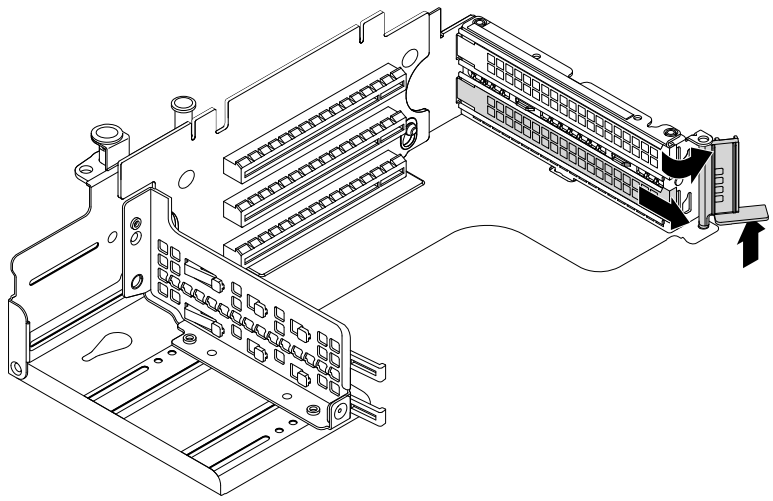

Figure 52. Removing the PCIe slot bracket

6. Touch the static-protective package that contains the PCIe card to any unpainted surface on the outside of the server. Then, take the PCIe card out of the package.

Note: Carefully handle the PCIe card by its edges.

7. Adjust the card-retaining bracket if necessary. See “Adjusting the card-retaining bracket” on page 83.
8. Position the PCIe card near the PCIe slot. Then, carefully press the PCIe card straight into the slot until it is securely seated. Ensure that the PCIe card bracket is secured by the riser card bracket.

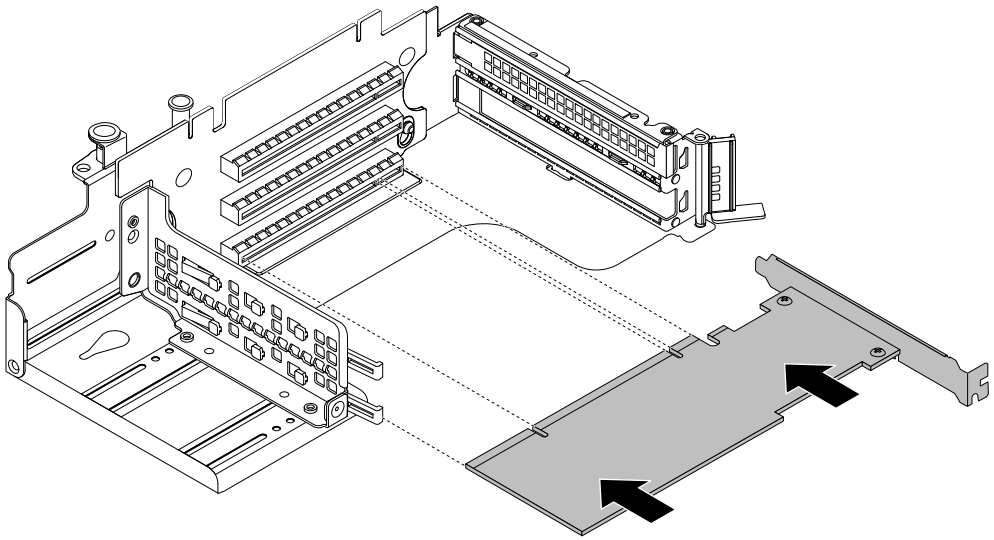

Figure 53. Installing the PCIe card

9. Pivot the card latch to the closed position to secure the PCIe card in position.

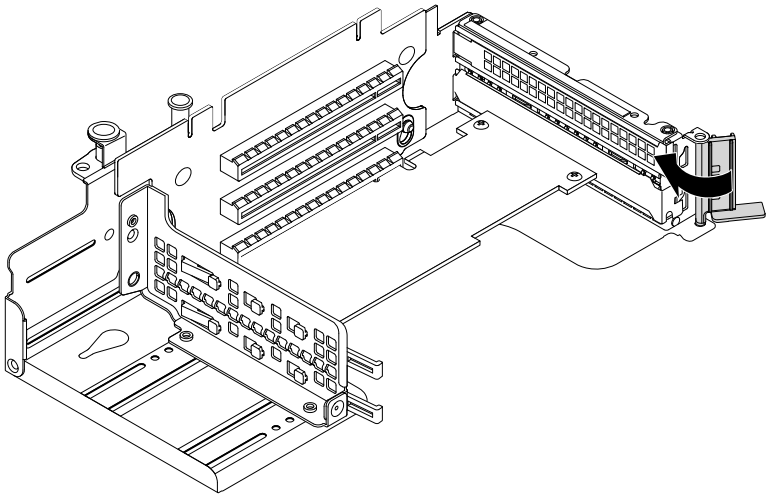

Figure 54. Pivoting the card latch to the closed position

10. Depending on the type of the PCIe card, connect any required cables if necessary. Refer to the documentation that comes with the PCIe card for specific information.
11. Reinstall the riser card assembly. See “Replacing the riser card” on page 77.

What to do next:

- To work with another piece of hardware, go to the appropriate section.

- To complete the installation, go to “Completing the parts replacement” on page 165.

Installing a PCIe card on the system board

Attention: Do not open your server or attempt any repair before reading and understanding “Safety information” on page iii and “Guidelines” on page 59.

Before you begin, print all the related instructions or ensure that you can view the PDF version on another computer for reference.

Notes:

- Depending on the specific type, the PCIe card might look different from the illustrations in this topic.
- Use any documentation that comes with the PCIe card and follow those instructions in addition to the instructions in this topic.

To install a PCIe card on the system board, do the following:

1. Remove all external media from the drives and turn off all attached devices and the server. Then, disconnect all power cords from electrical outlets and disconnect all cables that are connected to the server.
2. Prepare your server. See “Removing or extending the server from the rack cabinet” on page 61.
3. Remove the server cover. See “Removing the server cover” on page 61.
4. Locate the PCIe slot on the system board and then pivot the card latch to the open position.

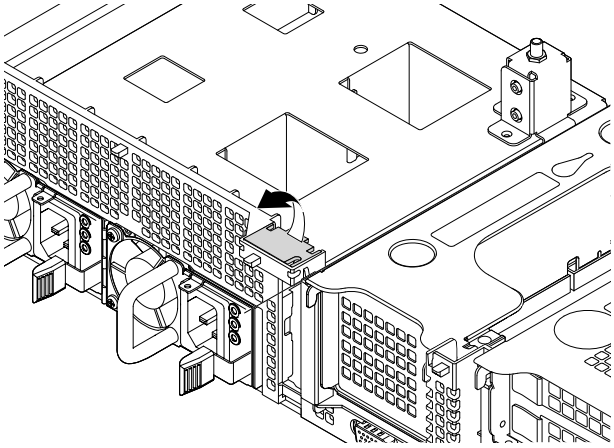

Figure 55. Opening the PCIe card latch

5. Remove the PCIe slot bracket from the chassis. Store the bracket in case that you later remove the PCIe card and need the bracket to cover the place.

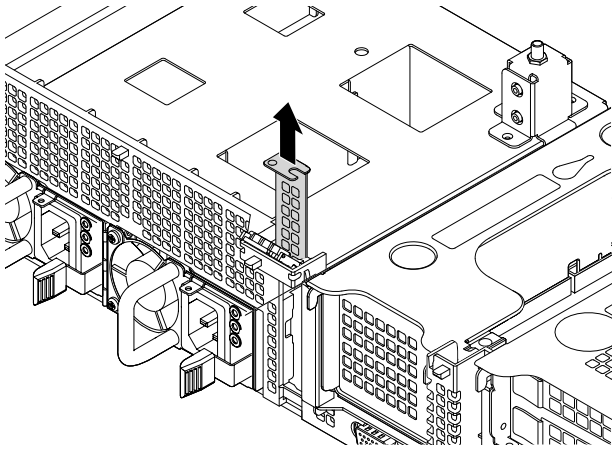

Figure 56. Removing the PCIe slot bracket

6. Touch the static-protective package that contains the PCIe card to any unpainted surface on the outside of the server. Then, take the PCIe card out of the package.

   Note: Carefully handle the PCIe card by its edges.

7. If necessary, replace the full-height bracket with the low-profile bracket. To replace the bracket, do the following:

   Note: Depending on the specific type, the PCIe card and its bracket might look different from the following illustrations.

   a. Carefully remove the screws that secure the PCIe card and then remove the full-height bracket from the PCIe card.

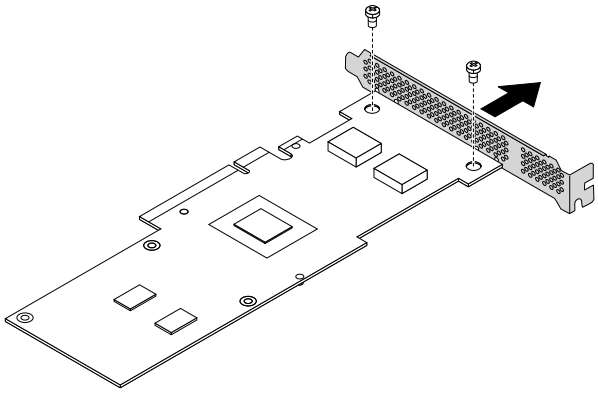

Figure 57. Removing the full-height bracket

b. Note the orientation and align the screw holes in the low-profile bracket with the corresponding holes in the PCIe card. Then, install the screws to secure the bracket to the PCIe card.

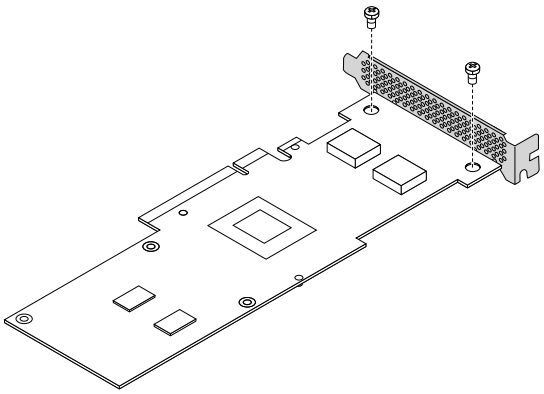

Figure 58. Installing the low-profile bracket

8. Position the PCIe card near the PCIe slot. Then, carefully press the PCIe card straight into the slot until it is securely seated and its bracket also is secured by the chassis.

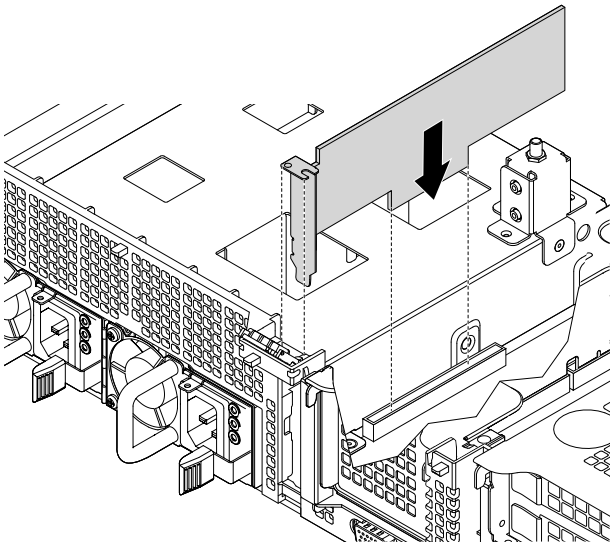

Figure 59. Installing the PCIe card

9. Pivot the card latch to the closed position to secure the PCIe card in position.

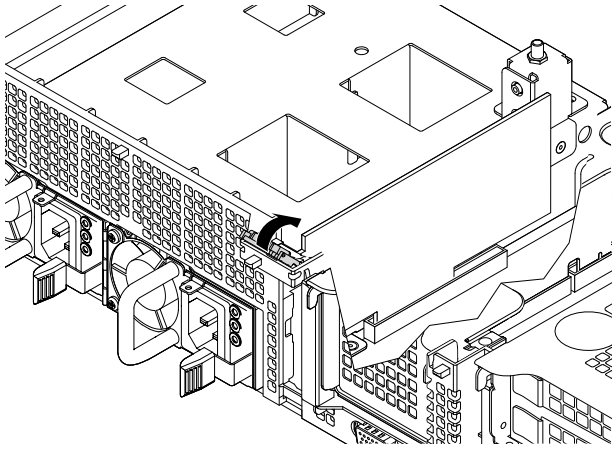

Figure 60. Pivoting the card latch to the closed position

10. Depending on the type of the PCIe card, connect any required cables if necessary. Refer to the documentation that comes with the PCIe card for specific information.

What to do next:

- To work with another piece of hardware, go to the appropriate section.
- To complete the installation, go to "Completing the parts replacement" on page 165. Then, continue with the following procedure to install the PCIe card driver if required.

Removing a PCIe card

This topic contains the following information:

- "Removing a PCIe card from the riser card assembly" on page 90
- "Removing a PCIe card from the system board" on page 92

Removing a PCIe card from the riser card assembly

Attention: Do not open your server or attempt any repair before reading and understanding "Safety information" on page iii and "Guidelines" on page 59.

Before you begin, print all the related instructions or ensure that you can view the PDF version on another computer for reference.

Notes:

- Depending on the specific type, the PCIe card might look different from the illustrations in this topic.
- Use any documentation that comes with the PCIe card and follow those instructions in addition to the instructions in this topic.

The following procedure is based on the scenario that you want to remove a full-height, half-length PCIe card installed on the riser card. The procedure is similar if you want to remove a low-profile PCIe card installed on the riser card.

To remove a PCIe card from the riser card assembly, do the following:

1. Remove all external media from the drives and turn off all attached devices and the server. Then, disconnect all power cords from electrical outlets and disconnect all cables that are connected to the server.
2. Prepare your server. See “Removing or extending the server from the rack cabinet” on page 61.
3. Remove the server cover. See “Removing the server cover” on page 61.
4. Remove the riser card assembly and lay it upside down on a flat, clean, and static-protective surface. See “Replacing the riser card” on page 77.
5. Locate the PCIe card you want to remove. Then, press the tab to pivot the card latch to the open position.

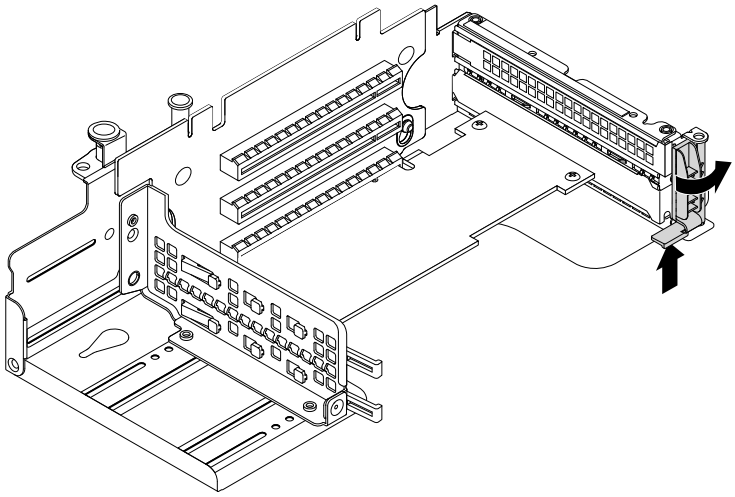

Figure 61. Pivoting the card latch to the open position

6. Grasp the PCIe card by its edges and carefully pull it out of the PCIe slot.

   Note: The PCIe card might fit tightly into the PCIe slot. If necessary, alternate moving each side of the PCIe card a small and equal amount until it is removed from the slot.

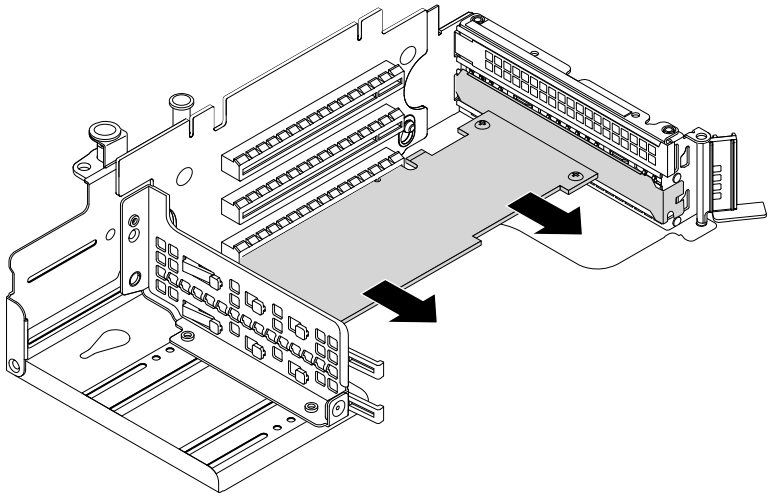

Figure 62. Removing the PCIe card

7. Install a new PCIe card to replace the old one or install a PCIe card slot bracket to cover the place. See “Installing a PCIe card on the riser card assembly” on page 85.
8. Reinstall the riser card assembly. See “Replacing the riser card” on page 77.
9. If you are instructed to return the old PCIe card, follow all packaging instructions and use any packaging materials that are supplied to you for shipping.

What to do next:

- To work with another piece of hardware, go to the appropriate section.
- To complete the removal procedure, go to “Completing the parts replacement” on page 165.

Removing a PCIe card from the system board

Attention: Do not open your server or attempt any repair before reading and understanding “Safety information” on page iii and “Guidelines” on page 59.

Before you begin, print all the related instructions or ensure that you can view the PDF version on another computer for reference.

Notes:

- Depending on the specific type, the PCIe card might look different from the illustration in this topic.
- Use any documentation that comes with the PCIe card and follow those instructions in addition to the instructions in this topic.

To remove a PCIe card from the system board, do the following:

1. Remove all external media from the drives and turn off all attached devices and the server. Then, disconnect all power cords from electrical outlets and disconnect all cables that are connected to the server.
2. Prepare your server. See “Removing or extending the server from the rack cabinet” on page 61.
3. Remove the server cover. See “Removing the server cover” on page 61.
4. Locate the PCIe card and then pivot the card latch to the open position. Then, grasp the PCIe card by its edges and carefully pull it out of the PCIe slot.

   Note: The PCIe card might fit tightly into the PCIe slot. If necessary, alternate moving each side of the PCIe card a small and equal amount until it is removed from the slot.

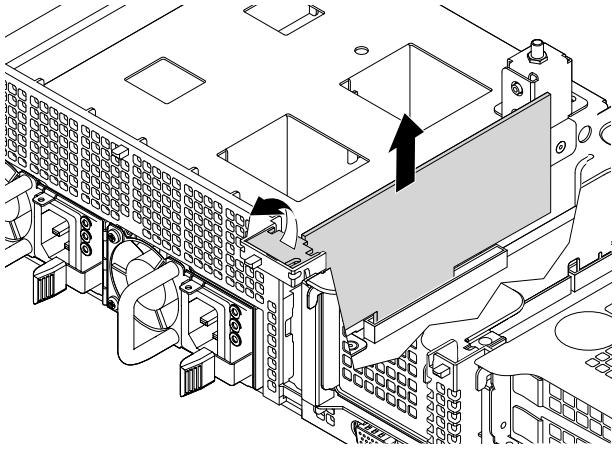

Figure 63. Removing the PCIe card

5. Install a new PCIe card to replace the old one or install a PCIe card slot bracket to cover the place. See “Installing a PCIe card on the system board” on page 87.
6. If you are instructed to return the old PCIe card, follow all packaging instructions and use any packaging materials that are supplied to you for shipping.

What to do next:

- To work with another piece of hardware, go to the appropriate section.
- To complete the removal procedure, go to “Completing the parts replacement” on page 165.

Replacing the AnyRAID adapter

Attention: Do not open your server or attempt any repair before reading and understanding “Safety information” on page iii and “Guidelines” on page 59.

Before you begin, print all the related instructions or ensure that you can view the PDF version on another computer for reference.

Notes:

- Use any documentation that comes with the new AnyRAID adapter and follow those instructions in addition to the instructions in this topic.
- Depending on the model, your AnyRAID adapter might look different from the illustrations in this topic.

To replace the AnyRAID adapter, do the following:

Attention: Replacing the AnyRAID adapter might impact your RAID configurations. Back up your data before you begin to avoid any data loss due to a RAID configuration change.

1. Remove all external media from the drives and turn off all attached devices and the server. Then, disconnect all power cords from electrical outlets and disconnect all cables that are connected to the server.
2. Prepare your server. See “Removing or extending the server from the rack cabinet” on page 61.
3. Remove the server cover. See “Removing the server cover” on page 61.
4. Locate the AnyRAID adapter. See “Server components” on page 25.

5. Loosen the two screws and grasp the AnyRAID adapter by its edges and carefully pull it out.

   Note: The AnyRAID adapter might fit tightly into the slots. If necessary, alternate moving each side of the AnyRAID adapter a small and equal amount until it is removed from the slots.

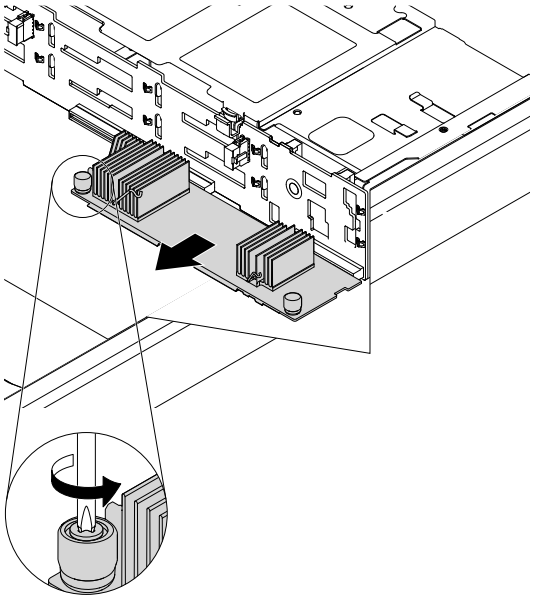

Figure 64. Removing the AnyRAID adapter

6. Touch the static-protective package that contains the new AnyRAID adapter to any unpainted surface on the outside of the server. Then, take the new AnyRAID adapter out of the package.

   Note: Carefully handle the AnyRAID adapter by its edges.

7. Position the new AnyRAID adapter near the backplane. Then, carefully press the AnyRAID adapter straight into the AnyRAID adapter slots until it is securely seated.

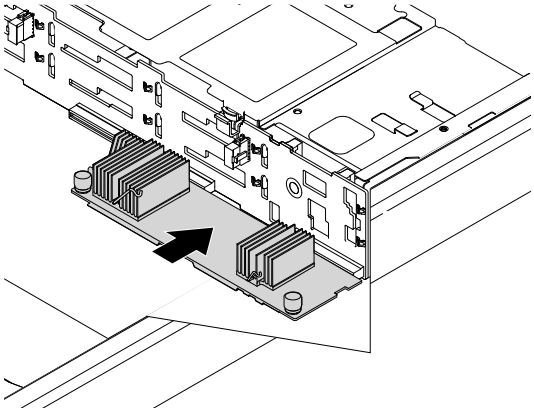

Figure 65. Installing the AnyRAID adapter

8. Tighten the two screws to secure the AnyRAID adapter.

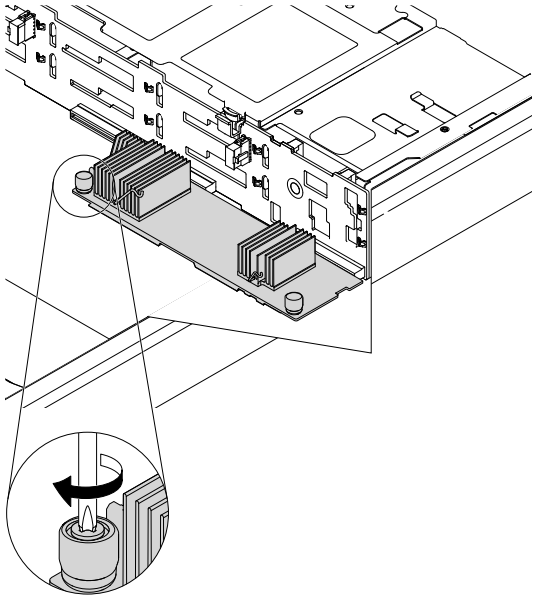

Figure 66. Tightening the screws

9. If you are instructed to return the old AnyRAID adapter, follow all packaging instructions and use any packaging materials that are supplied to you for shipping.

What to do next:

- To work with another piece of hardware, go to the appropriate section.
- To complete the replacement, go to "Completing the parts replacement" on page 165.

Installing or removing the AnyRAID flash module

This topic applies only to AnyRAID adapters that support the flash module.

The AnyRAID flash module works as the cache memory of the installed AnyRAID adapter. You can purchase a AnyRAID flash module from Lenovo.

For a list of ThinkServer options, go to:
http://lenovoquickpick.com/usa/home/thinkserver/rack-and-tower-server

Installing the AnyRAID flash module

Attention: Do not open your server or attempt any repair before reading and understanding "Safety information" on page iii and "Guidelines" on page 59.

Before you begin, print all the related instructions or ensure that you can view the PDF version on another computer for reference.

Notes:

- Use any documentation that comes with the AnyRAID flash module and follow those instructions in addition to the instructions in this topic.

- Depending on the specific type, your AnyRAID adapter and the AnyRAID flash module might look different from the illustration in this topic.

To install the AnyRAID flash module, do the following:

1. Remove all external media from the drives and turn off all attached devices and the server. Then, disconnect all power cords from electrical outlets and disconnect all cables that are connected to the server.
2. Prepare your server. See “Removing or extending the server from the rack cabinet” on page 61.
3. Remove the server cover. See “Removing the server cover” on page 61.
4. Locate the AnyRAID adapter. See “Server components” on page 25.
5. Remove any parts and disconnect any cables that might impede your operation.
6. Position the AnyRAID flash module above the AnyRAID adapter and align the two holes in the AnyRAID flash module with the two pins on the AnyRAID adapter. Then, lower the AnyRAID flash module straight down until it is securely seated.

   Note: If necessary, remove the AnyRAID adapter first for easier operation. Then, reinstall the AnyRAID adapter. See “Replacing the AnyRAID adapter” on page 93.

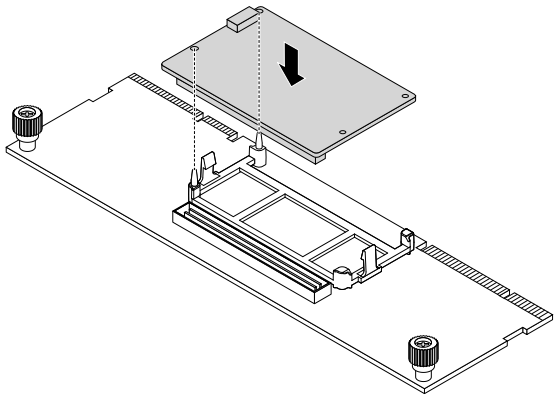

Figure 67. Installing the AnyRAID flash module

7. Reinstall any parts and reconnect any cables that you have removed.

What to do next:

- To work with another piece of hardware, go to the appropriate section.
- To complete the installation, go to “Completing the parts replacement” on page 165.

Removing the AnyRAID flash module

Attention: Do not open your server or attempt any repair before reading and understanding “Safety information” on page iii and “Guidelines” on page 59.

Before you begin, print all the related instructions or ensure that you can view the PDF version on another computer for reference.

Note: Depending on the specific type, your AnyRAID adapter and the AnyRAID flash module might look different from the illustration in this topic.

To remove the AnyRAID flash module, do the following:

1. Remove all external media from the drives and turn off all attached devices and the server. Then, disconnect all power cords from electrical outlets and disconnect all cables that are connected to the server.
2. Prepare your server. See “Removing or extending the server from the rack cabinet” on page 61.
3. Remove the server cover. See “Removing the server cover” on page 61.
4. Locate the AnyRAID adapter. See “Server components” on page 25.
5. Remove any parts and disconnect any cables that might impede your operation.
6. Press the two release tabs **1** and lift the AnyRAID flash module straight up and out of the AnyRAID adapter.

   Note: If necessary, remove the AnyRAID adapter first for easier operation. Then, reinstall the AnyRAID adapter. See “Replacing the AnyRAID adapter” on page 93.

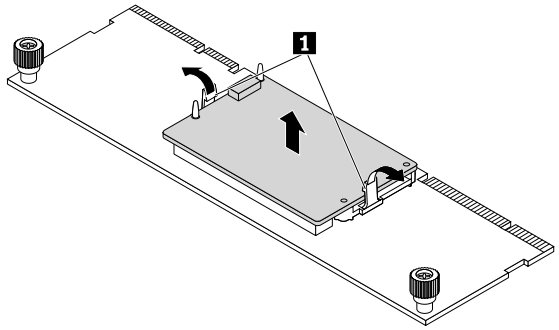

Figure 68. Removing the AnyRAID flash module

7. Reinstall any parts and reconnect any cables that you have removed.
8. If you are instructed to return the old AnyRAID flash module, follow all packaging instructions and use any packaging materials that are supplied to you for shipping.

What to do next:

- To work with another piece of hardware, go to the appropriate section.
- To complete the removal procedure, go to “Completing the parts replacement” on page 165.

Installing or removing the Lenovo ThinkServer RAID 110i upgrade key

The Lenovo ThinkServer RAID 110i upgrade key (hereinafter referred to as RAID 110i key) activates RAID 5 for the onboard SATA software RAID. As a result, the capability of the system board is expanded. You can purchase a RAID 110i key from Lenovo and install it to the RAID upgrade key connector on the system board.

For a list of ThinkServer options, go to:
http://lenovoquickpick.com/usa/home/thinkserver/rack-and-tower-server

Installing the RAID 110i key

Attention: Do not open your server or attempt any repair before reading and understanding “Safety information” on page iii and “Guidelines” on page 59.

Before you begin, print all the related instructions or ensure that you can view the PDF version on another computer for reference.

Note: Use any documentation that comes with the RAID 110i key and follow those instructions in addition to the instructions in this topic.

To install the RAID 110i key, do the following:

Attention: Installing the upgrade key might impact your RAID configurations. Back up your data before you begin to avoid any data loss due to a RAID configuration change.

1. Remove all external media from the drives and turn off all attached devices and the server. Then, disconnect all power cords from electrical outlets and disconnect all cables that are connected to the server.
2. Prepare your server. See “Removing or extending the server from the rack cabinet” on page 61.
3. Remove the server cover. See “Removing the server cover” on page 61.
4. Touch the static-protective package that contains the RAID 110i key to any unpainted surface on the outside of the server. Then, take the RAID 110i key out of the package.

   Note: Carefully handle the RAID 110i key by its edges.
5. Locate the RAID upgrade key connector on the system board and then insert the RAID 110i key into the RAID upgrade key connector on the system board.

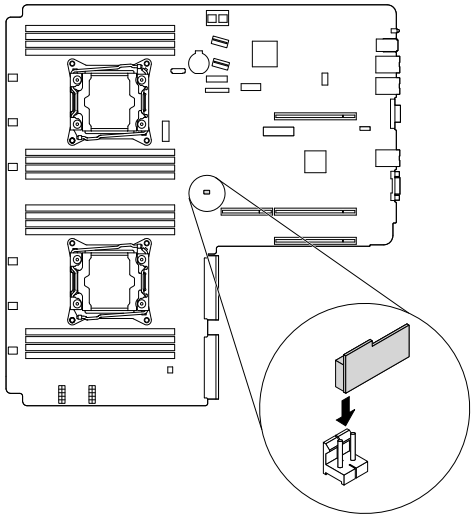

Figure 69. Installing the RAID 110i key

What to do next:

- To work with another piece of hardware, go to the appropriate section.
- To complete the installation, go to “Completing the parts replacement” on page 165.

Removing the RAID 110i key

Attention: Do not open your server or attempt any repair before reading and understanding “Safety information” on page iii and “Guidelines” on page 59.

Before you begin, print all the related instructions or ensure that you can view the PDF version on another computer for reference.

Notes:

- If you remove the RAID 110i key, the onboard SATA software RAID function will be unavailable.

- Use any documentation that comes with the RAID 110i key and follow those instructions in addition to the instructions in this topic.

To remove the RAID 110i key, do the following:

Attention: Removing the upgrade key might impact your RAID configurations. Back up your data before you begin to avoid any data loss due to a RAID configuration change.

1. Remove all external media from the drives and turn off all attached devices and the server. Then, disconnect all power cords from electrical outlets and disconnect all cables that are connected to the server.
2. Prepare your server. See “Removing or extending the server from the rack cabinet” on page 61.
3. Remove the server cover. See “Removing the server cover” on page 61.
4. Locate the RAID upgrade key connector on the system board. Then, remove the installed RAID 110i key by lifting it straight up.

   Note: Carefully handle the RAID 110i key by its edges.

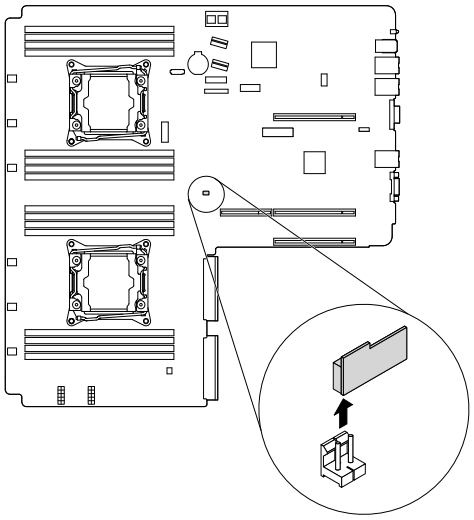

Figure 70. Removing the RAID 110i key

5. If you are instructed to return the old RAID 110i key, follow all packaging instructions and use any packaging materials that are supplied to you for shipping.

What to do next:

- To work with another piece of hardware, go to the appropriate section.
- To complete the removal procedure, go to “Completing the parts replacement” on page 165.

Installing or removing the Lenovo ThinkServer RAID 510i upgrade key

The Lenovo ThinkServer RAID 510i upgrade key (hereinafter referred to as RAID 510i key) activates RAID 5 and RAID 50 levels for advanced SATA or SAS hardware RAID. As a result, the capability of the installed Lenovo ThinkServer RAID 510i AnyRAID Adapter is expanded. You can purchase a RAID 510i key from Lenovo and install it to the RAID upgrade key connector on the Lenovo ThinkServer RAID 510i AnyRAID Adapter.

For a list of ThinkServer options, go to:
http://lenovoquickpick.com/usa/home/thinkserver/rack-and-tower-server

Installing the RAID 510i key

Attention: Do not open your server or attempt any repair before reading and understanding “Safety information” on page iii and “Guidelines” on page 59.

Before you begin, print all the related instructions or ensure that you can view the PDF version on another computer for reference.

Note: Use any documentation that comes with the RAID 510i key and follow those instructions in addition to the instructions in this topic.

To install the RAID 510i key, do the following:

Attention: Installing the upgrade key might impact your RAID configurations. Back up your data before you begin to avoid any data loss due to a RAID configuration change.

1. Remove all external media from the drives and turn off all attached devices and the server. Then, disconnect all power cords from electrical outlets and disconnect all cables that are connected to the server.
2. Prepare your server. See “Removing or extending the server from the rack cabinet” on page 61.
3. Remove the server cover. See “Removing the server cover” on page 61.
4. Locate the Lenovo ThinkServer RAID 510i AnyRAID Adapter. See “Server components” on page 25.
5. Touch the static-protective package that contains the RAID 510i key to any unpainted surface on the outside of the server. Then, take the RAID 510i key out of the package.

   Note: Carefully handle the RAID 510i key by its edges.
6. Locate the connector for the RAID 510i key on the Lenovo ThinkServer RAID 510i AnyRAID Adapter. Then, insert the RAID 510i key into the connector. Ensure that the RAID 510i key is securely seated on the AnyRAID adapter.

   Note: If necessary, remove the Lenovo ThinkServer RAID 510i AnyRAID Adapter first for easier operation. Then, reinstall the Lenovo ThinkServer RAID 510i AnyRAID Adapter. See “Replacing the AnyRAID adapter” on page 93.

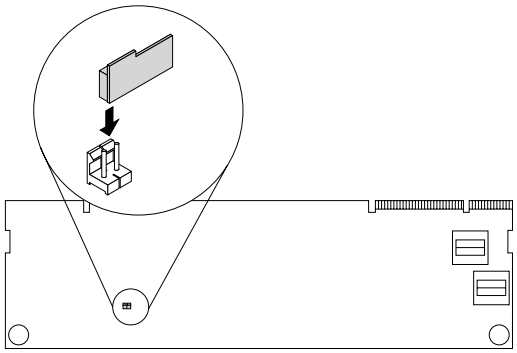

Figure 71. Installing the RAID 510i key

What to do next:

- To work with another piece of hardware, go to the appropriate section.
- To complete the installation, go to “Completing the parts replacement” on page 165. Then, the hardware RAID 5 and RAID 50 levels are available for your server if your server has the required number of storage drives installed. For information about how to configure the hardware RAID, refer to the *MegaRAID SAS Software User Guide* on the documentation DVD that comes with your server.

Removing the RAID 510i key

Attention: Do not open your server or attempt any repair before reading and understanding “Safety information” on page iii and “Guidelines” on page 59.

Before you begin, print all the related instructions or ensure that you can view the PDF version on another computer for reference.

Notes:

- If you remove the RAID 510i key, the hardware RAID 5 and RAID 50 will be disabled.
- Use any documentation that comes with the RAID 510i key and follow those instructions in addition to the instructions in this topic.

To remove the RAID 510i key, do the following:

Attention: Removing the upgrade key might impact your RAID configurations. Back up your data before you begin to avoid any data loss due to a RAID configuration change.

1. Remove all external media from the drives and turn off all attached devices and the server. Then, disconnect all power cords from electrical outlets and disconnect all cables that are connected to the server.
2. Prepare your server. See “Removing or extending the server from the rack cabinet” on page 61.
3. Remove the server cover. See “Removing the server cover” on page 61.
4. Locate the Lenovo ThinkServer RAID 510i AnyRAID Adapter. See “Server components” on page 25.
5. Remove the RAID 510i key from the Lenovo ThinkServer RAID 510i AnyRAID Adapter.

   Note: If necessary, remove the Lenovo ThinkServer RAID 510i AnyRAID Adapter first for easier operation. Then, reinstall the Lenovo ThinkServer RAID 510i AnyRAID Adapter. See “Replacing the AnyRAID adapter” on page 93.

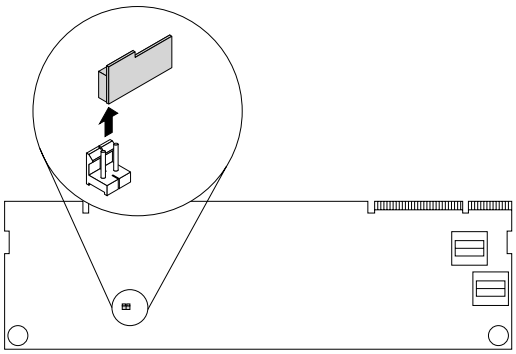

Figure 72. Removing the RAID 510i key

6. If you are instructed to return the old RAID 510i key, follow all packaging instructions and use any packaging materials that are supplied to you for shipping.

What to do next:

- To work with another piece of hardware, go to the appropriate section.
- To complete the removal procedure, go to “Completing the parts replacement” on page 165. Because the hardware RAID 5 and 50 levels are not available without the RAID 510i key, reconfigure RAID for your server if necessary. For information about how to configure the hardware RAID, refer to the *MegaRAID SAS Software User Guide* on the documentation DVD that comes with your server.

Installing or removing the Lenovo ThinkServer RAID 500 upgrade key

This topic provides instructions on how to install or remove the Lenovo ThinkServer RAID 500 upgrade key (hereinafter referred to as RAID 500 key).

The RAID 500 key expands the capability of the installed Lenovo ThinkServer RAID 500 PCIe Adapter by activating RAID 5 and RAID 50 levels for advanced SATA/SAS hardware RAID. You can purchase a RAID 500 key from Lenovo.

For a list of ThinkServer options, go to:
http://lenovoquickpick.com/usa/home/thinkserver/rack-and-tower-server

Installing the RAID 500 key

Attention: Do not open your server or attempt any repair before reading and understanding “Safety information” on page iii and “Guidelines” on page 59.

Before you begin, print all the related instructions or ensure that you can view the PDF version on another computer for reference.

Note: Use any documentation that comes with the RAID 500 key and follow those instructions in addition to the instructions in this topic.

To install the RAID 500 key, do the following:

Attention: Installing the upgrade key might impact your RAID configurations. Back up your data before you begin to avoid any data loss due to a RAID configuration change.

1. Remove all external media from the drives and turn off all attached devices and the server. Then, disconnect all power cords from electrical outlets and disconnect all cables that are connected to the server.
2. Prepare your server. See “Removing or extending the server from the rack cabinet” on page 61.
3. Remove the server cover. See “Removing the server cover” on page 61.
4. Locate the Lenovo ThinkServer RAID 500 PCIe Adapter. See “Server components” on page 25.
5. Touch the static-protective package that contains the RAID 500 key to any unpainted surface on the outside of the server. Then, take the RAID 500 key out of the package.

   Note: Carefully handle the RAID 500 key by its edges.

6. Locate the connector for the RAID 500 key on the Lenovo ThinkServer RAID 500 PCIe Adapter. Then, insert the RAID 500 key into the connector. Ensure that the RAID 500 key is securely seated on the RAID adapter.

   Note: If necessary, remove the Lenovo ThinkServer RAID 500 PCIe Adapter first for easier operation. Then, reinstall the Lenovo ThinkServer RAID 500 PCIe Adapter. See “Installing or removing a PCI Express card: Ethernet card, RAID card, and other supported types of PCI Express cards” on page 82.

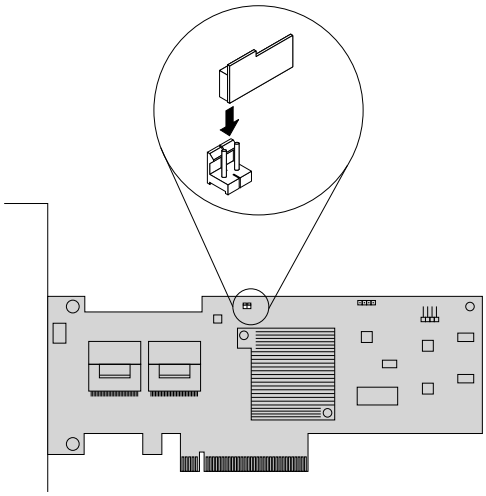

Figure 73. Installing the RAID 500 key

7. Reinstall any parts or reconnect any cables that you have removed.

What to do next:

- To work with another piece of hardware, go to the appropriate section.
- To complete the installation, go to “Completing the parts replacement” on page 165. Then, the hardware RAID 5 and RAID 50 levels are available for your server if your server has the required number of storage drives installed. For information about how to configure the hardware RAID, refer to the *MegaRAID SAS Software User Guide* on the documentation DVD that comes with your server.

Removing the RAID 500 key

Attention: Do not open your server or attempt any repair before reading and understanding “Safety information” on page iii and “Guidelines” on page 59.

Before you begin, print all the related instructions or ensure that you can view the PDF version on another computer for reference.

Notes:

- If you remove the RAID 500 key from the Lenovo ThinkServer RAID 500 PCIe Adapter, the hardware RAID 5 and RAID 50 levels will be disabled.
- Use any documentation that comes with the RAID 500 key and follow those instructions in addition to the instructions in this topic.

To remove the RAID 500 key from the RAID card, do the following:

Attention: Removing the upgrade key might impact your RAID configurations. Back up your data before you begin to avoid any data loss due to a RAID configuration change.

1. Remove all external media from the drives and turn off all attached devices and the server. Then, disconnect all power cords from electrical outlets and disconnect all cables that are connected to the server.
2. Prepare your server. See “Removing or extending the server from the rack cabinet” on page 61.
3. Remove the server cover. See “Removing the server cover” on page 61.
4. Locate the Lenovo ThinkServer RAID 500 PCIe Adapter. See “Server components” on page 25.
5. Remove the RAID 500 key from the Lenovo ThinkServer RAID 500 PCIe Adapter.

   Note: If necessary, remove the Lenovo ThinkServer RAID 500 PCIe Adapter first for easier operation. Then, reinstall the Lenovo ThinkServer RAID 500 PCIe Adapter. See “Installing or removing a PCI Express card: Ethernet card, RAID card, and other supported types of PCI Express cards” on page 82.

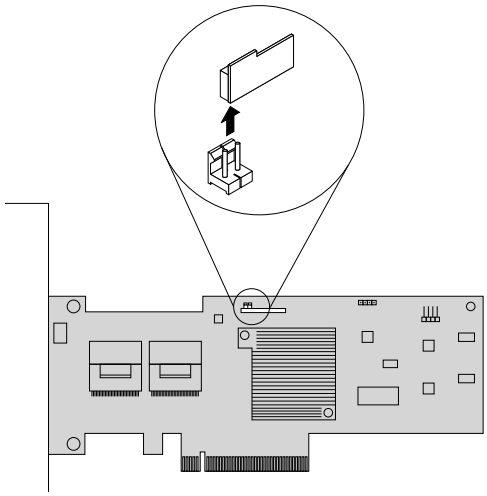

Figure 74. Removing the RAID 500 key

6. Reinstall any parts or reconnect any cables that you have removed.
7. If you are instructed to return the old RAID 500 key, follow all packaging instructions and use any packaging materials that are supplied to you for shipping.

What to do next:

- To work with another piece of hardware, go to the appropriate section.
- To complete the removal procedure, go to “Completing the parts replacement” on page 165. Because the hardware RAID 5 and 50 levels are not available without the RAID 500 key, reconfigure RAID for your server if necessary. For information about how to configure the hardware RAID, refer to the *MegaRAID SAS Software User Guide* on the documentation DVD that comes with your server.

Installing or removing the optical module

The optical module enables you to connect two network devices with optical fiber cables. The optical module is needed only on some PCIe cards.

Note: The optical module is extremely sensitive to ESD. Ensure that you read and understand “Handling static-sensitive devices” on page 60 first and carefully perform the operation.

Installing the optical module

Attention: Do not open your server or attempt any repair before reading and understanding “Safety information” on page iii and “Guidelines” on page 59.

Before you begin, print all the related instructions or ensure that you can view the PDF version on another computer for reference.

Notes:

- The optical module and the PCIe card might look different from the illustration in this topic.
- Before you install the optical module, ensure that the PCIe card that requires the optical module is installed in the server. See “Installing a PCIe card” on page 82.

To install the optical module, do the following:

1. Locate the two holes at the rear of the PCIe card for installing the optical module.
2. Touch the static-protective package that contains the optical module to any unpainted surface on the outside of the server. Then, take the optical module out of the package.
3. With the optical module handle in the open position, insert the optical module into one of the two holes in the PCIe card.

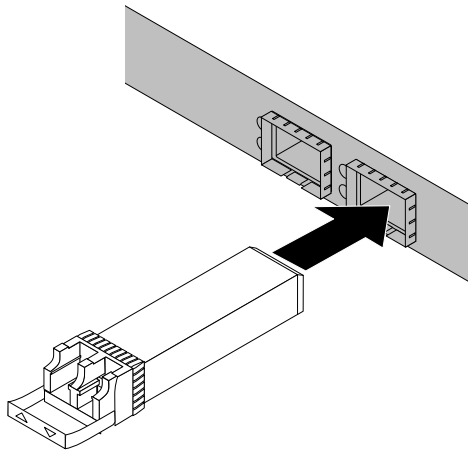

Figure 75. Installing the optical module

4. Pivot the optical module handle to the closed position to secure the optical module in place.

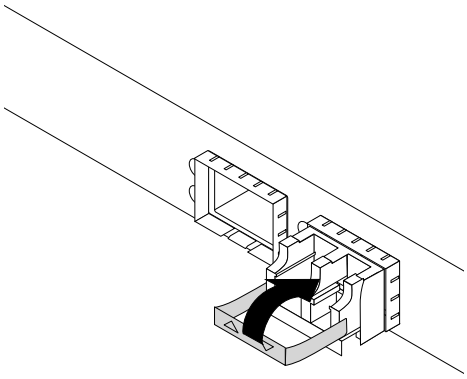

Figure 76. Pivoting the optical module handle to the closed position

What to do next:

- To work with another piece of hardware, go to the appropriate section.
- To complete the installation, go to “Completing the parts replacement” on page 165.

Removing the optical module

Attention: Do not open your server or attempt any repair before reading and understanding “Safety information” on page iii and “Guidelines” on page 59.

Before you begin, print all the related instructions or ensure that you can view the PDF version on another computer for reference.

Note: The optical module and the PCIe card might look different from the illustration in this topic.

To remove the optical module, do the following:

1. Locate the optical module at the rear of your server.

2. Pivot the optical module handle to the open position.

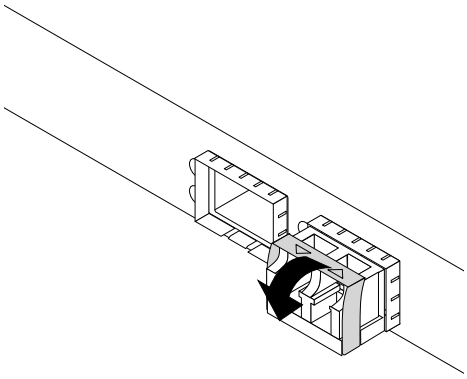

Figure 77. Pivoting the optical module handle to the open position

3. Gently pull the optical module out from the PCIe card.

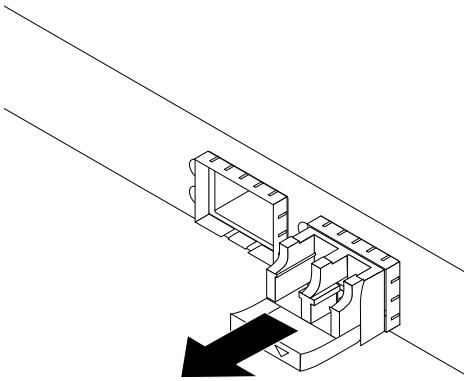

Figure 78. Removing the optical module

4. If you are instructed to return the old optical module, follow all packaging instructions and use any packaging materials that are supplied to you for shipping.

What to do next:

- To work with another piece of hardware, go to the appropriate section.
- To complete the removal procedure, go to “Completing the parts replacement” on page 165.

Installing or removing the secure digital module

The secure digital (SD) module provides an easy way for data storage. You can install two SD cards into the SD module. You can purchase an SD module and SD cards from Lenovo.

For a list of ThinkServer options, go to:
http://lenovoquickpick.com/usa/home/thinkserver/rack-and-tower-server

Installing the SD module

Attention: Do not open your server or attempt any repair before reading and understanding "Safety information" on page iii and "Guidelines" on page 59.

Before you begin, print all the related instructions or ensure that you can view the PDF version on another computer for reference.

Notes:

- Use any documentation that comes with the SD module and follow those instructions in addition to the instructions in this topic.
- Depending on the model, your server might look slightly different from the illustration in this topic.

To install the SD module, do the following:

1. Remove all external media from the drives and turn off all attached devices and the server. Then, disconnect all power cords from electrical outlets and disconnect all cables that are connected to the server.
2. Prepare your server. See "Removing or extending the server from the rack cabinet" on page 61.
3. Remove the server cover. See "Removing the server cover" on page 61.
4. Remove the riser card assembly 1. See "Replacing the riser card" on page 77.
5. Locate the SD module connector on the system board. See "System board components" on page 38. Remove any parts and disconnect any cables that might impede your access to the SD module connector.
6. Touch the static-protective package that contains the SD module to any unpainted surface on the outside of the server. Then, take the SD module out of the package.

   Note: Carefully handle the SD module by its edges.
7. Insert the SD card into the SD card slot. The card might stop before it is completely installed into the SD module. Ensure that you insert the card firmly until you hear a click.

8. Position the SD module on the system board so that the plastic pins on the latch and on the system board pass through the corresponding holes in the SD module. Then, press the SD module downward so that it is connected to the SD module connector on the system board and is secured by the latch.

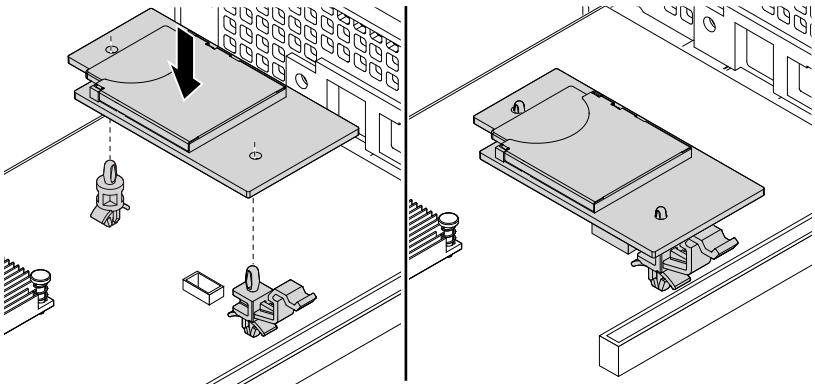

Figure 79. Installing the SD module

What to do next:

- To work with another piece of hardware, go to the appropriate section.
- To complete the installation, go to "Completing the parts replacement" on page 165.

Removing the SD module

Attention: Do not open your server or attempt any repair before reading and understanding "Safety information" on page iii and "Guidelines" on page 59.

Before you begin, print all the related instructions or ensure that you can view the PDF version on another computer for reference.

Notes:

- If you remove the SD module, you cannot install SD cards into your server for storage.
- Use any documentation that comes with the SD module and follow those instructions in addition to the instructions in this topic.

To remove the SD module, do the following:

1. Remove all external media from the drives and turn off all attached devices and the server. Then, disconnect all power cords from electrical outlets and disconnect all cables that are connected to the server.
2. Prepare your server. See "Removing or extending the server from the rack cabinet" on page 61.
3. Remove the server cover. See "Removing the server cover" on page 61.
4. Remove the riser card assembly 1. See "Replacing the riser card" on page 77.
5. Locate the SD module. See "Server components" on page 25.

6. Pivot the latch as shown and lift the SD module from the system board.

   Note: Carefully handle the SD module by its edges.

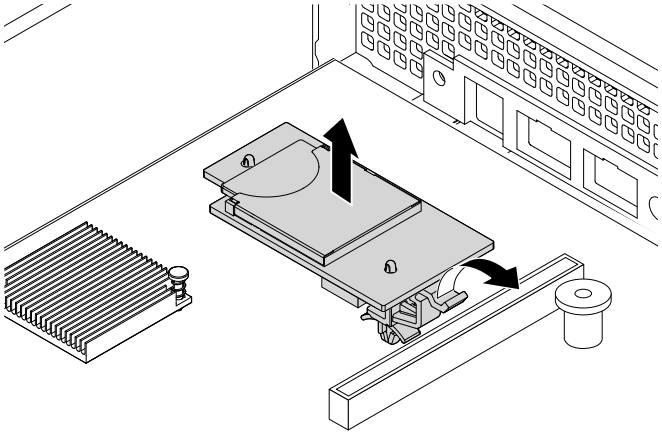

Figure 80. Removing the SD module

7. Push the SD card inward a little until you hear a click. Then, release it. The SD card ejects. Gently slide the card out of the card slot.
8. If you are instructed to return the old SD module, follow all packaging instructions and use any packaging materials that are supplied to you for shipping.

What to do next:

- To work with another piece of hardware, go to the appropriate section.
- To complete the removal procedure, go to "Completing the parts replacement" on page 165.

Installing or removing the ThinkServer System Manager Premium module

The ThinkServer System Manager Premium (TSM Premium) offers convenient, remote KVM access and control through the LAN or Internet. You can use the TSM Premium to gain location-independent remote access to respond to critical incidents and to undertake necessary maintenance. Therefore, working as an integrated solution in your server, the TSM Premium provides an increased level of manageability over the basic server management available. You can purchase a TSM premium module from Lenovo.

For a list of ThinkServer options, go to:
http://lenovoquickpick.com/usa/home/thinkserver/rack-and-tower-server

Installing the TSM premium module

Attention: Do not open your server or attempt any repair before reading and understanding "Safety information" on page iii and "Guidelines" on page 59.

Before you begin, print all the related instructions or ensure that you can view the PDF version on another computer for reference.

Notes:

- Use any documentation that comes with the TSM premium module and follow those instructions in addition to the instructions in this topic.
- Depending on the model, your server might look slightly different from the illustration in this topic.

To install the TSM premium module, do the following:

1. Remove all external media from the drives and turn off all attached devices and the server. Then, disconnect all power cords from electrical outlets and disconnect all cables that are connected to the server.
2. Prepare your server. See “Removing or extending the server from the rack cabinet” on page 61.
3. Remove the server cover. See “Removing the server cover” on page 61.
4. Remove the riser card assembly 2. See “Replacing the riser card” on page 77.
5. Touch the static-protective package that contains the TSM premium module to any unpainted surface on the outside of the server. Then, take the TSM premium module out of the package.
6. Locate the TSM Premium connector on the system board and then insert the TSM premium module into the TSM Premium connector.

   Note: Ensure that the TSM premium module is securely seated on the system board.

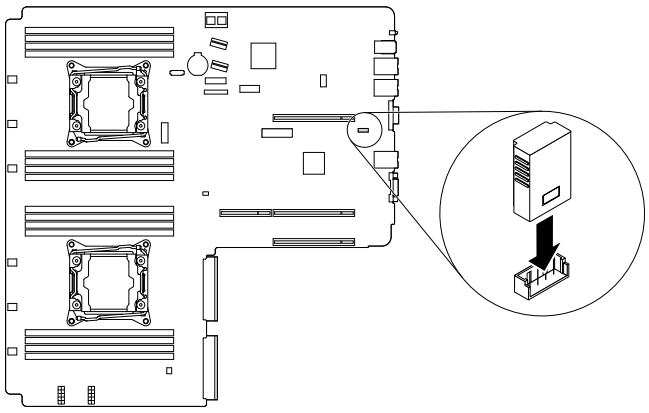

Figure 81. Installing the TSM premium module

What to do next:

- To work with another piece of hardware, go to the appropriate section.
- To complete the installation, go to “Completing the parts replacement” on page 165. Then, refer to the *ThinkServer System Manager User Guide*, which is available for download at http://www.lenovo.com/UserManuals, for more information about server remote management.

Removing the TSM premium module

Attention: Do not open your server or attempt any repair before reading and understanding “Safety information” on page iii and “Guidelines” on page 59.

Before you begin, print all the related instructions or ensure that you can view the PDF version on another computer for reference.

Notes:

- If you remove the TSM premium module, the iKVM function for server remote management will be unavailable.
- Use any documentation that comes with the TSM premium module and follow those instructions in addition to the instructions in this topic.
- Depending on the model, your server might look slightly different from the illustration in this topic.

To remove the TSM premium module, do the following:

1. Remove all external media from the drives and turn off all attached devices and the server. Then, disconnect all power cords from electrical outlets and disconnect all cables that are connected to the server.
2. Prepare your server. See “Removing or extending the server from the rack cabinet” on page 61.
3. Remove the server cover. See “Removing the server cover” on page 61.
4. Remove the riser card assembly 2. See “Replacing the riser card” on page 77.
5. Locate the TSM Premium connector on the system board and then lift the installed TSM premium module straight up.

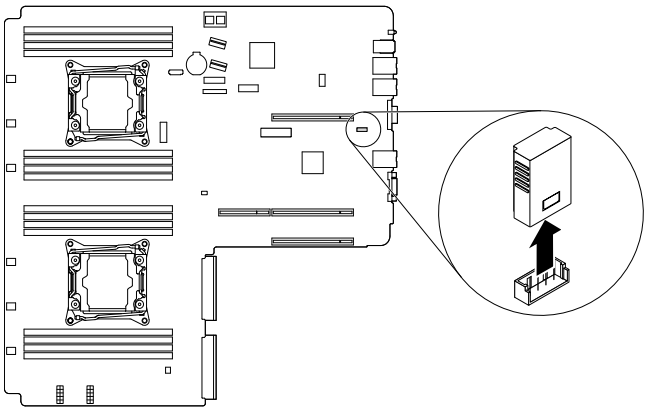

Figure 82. Removing the TSM premium module

6. If you are instructed to return the old TSM premium module, follow all packaging instructions and use any packaging materials that are supplied to you for shipping.

What to do next:

- To work with another piece of hardware, go to the appropriate section.
- To complete the removal procedure, go to “Completing the parts replacement” on page 165.

Installing or removing the ThinkServer Trusted Platform Module

The ThinkServer Trusted Platform Module (TPM) is a security chip designed by the Trusted Computing Group (TCG) to provide a hardware method of data encryption. It stores passwords, encryption keys, and digital certificates to help provide security solutions and protect the server. You can purchase a TPM option from Lenovo.

For a list of ThinkServer options, go to:
http://lenovoquickpick.com/usa/home/thinkserver/rack-and-tower-server

Installing the TPM

Attention: Do not open your server or attempt any repair before reading and understanding “Safety information” on page iii and “Guidelines” on page 59.

Before you begin, print all the related instructions or ensure that you can view the PDF version on another computer for reference.

Notes:

- Use any documentation that comes with the TPM and follow those instructions in addition to the instructions in this topic.
- Depending on the model, your server might look slightly different from the illustration in this topic.

To install the TPM, do the following:

1. Remove all external media from the drives and turn off all attached devices and the server. Then, disconnect all power cords from electrical outlets and disconnect all cables that are connected to the server.
2. Prepare your server. See “Removing or extending the server from the rack cabinet” on page 61.
3. Remove the server cover. See “Removing the server cover” on page 61.
4. Remove the riser card assembly 2. See “Replacing the riser card” on page 77.
5. Touch the static-protective package that contains the TPM to any unpainted surface on the outside of the server. Then, take the TPM out of the package.

   Note: Carefully handle the TPM by its edges.
6. Locate the TPM connector on the system board and then insert the TPM into the TPM connector on the system board.

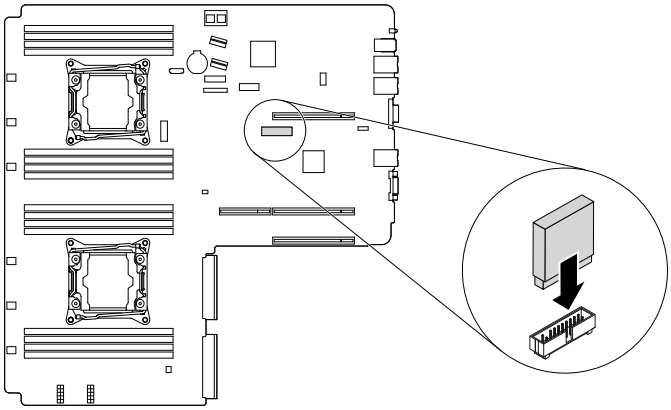

Figure 83. Installing the TPM

What to do next:

- To work with another piece of hardware, go to the appropriate section.
- To complete the installation, go to “Completing the parts replacement” on page 165. Then, you can configure the TPM function in the Setup Utility program. See “Configuring the TPM function” on page 52.

Removing the TPM

Attention: Do not open your server or attempt any repair before reading and understanding “Safety information” on page iii and “Guidelines” on page 59.

Before you begin, print all the related instructions or ensure that you can view the PDF version on another computer for reference.

Notes:

- If you remove the TPM, the TPM function will be unavailable.
- Use any documentation that comes with the TPM and follow those instructions in addition to the instructions in this topic.

To remove the TPM, do the following:

1. Remove all external media from the drives and turn off all attached devices and the server. Then, disconnect all power cords from electrical outlets and disconnect all cables that are connected to the server.
2. Prepare your server. See “Removing or extending the server from the rack cabinet” on page 61.
3. Remove the server cover. See “Removing the server cover” on page 61.
4. Remove the riser card assembly 2. See “Replacing the riser card” on page 77.
5. Locate the TPM connector on the system board and then lift the installed TPM straight up.

   Note: Carefully handle the TPM by its edges.

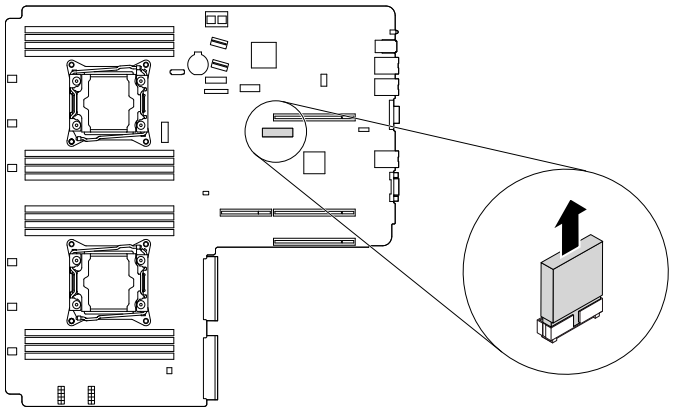

Figure 84. Removing the TPM

6. If you are instructed to return the old TPM, follow all packaging instructions and use any packaging materials that are supplied to you for shipping.

What to do next:

- To work with another piece of hardware, go to the appropriate section.
- To complete the removal procedure, go to “Completing the parts replacement” on page 165.

Installing or replacing a hot-swap redundant power supply

Attention: Do not open your server or attempt any repair before reading and understanding “Safety information” on page iii and “Guidelines” on page 59.

The hot-swap redundant power supplies help you avoid significant interruption to the operation of the system when a power supply fails. You can install or replace a power supply without turning off the server.

CAUTION:
Hazardous moving parts. Keep fingers and other body parts away.

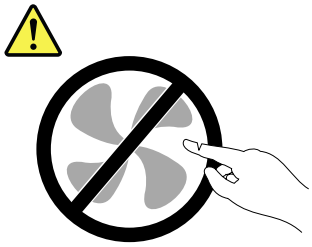

CAUTION:
Never remove the cover on a power supply or any part that has the following label attached.

Hazardous voltage, current, and energy levels are present inside any component that has this label attached. There are no serviceable parts inside these components. If you suspect a problem with one of these parts, contact a service technician.

Before you begin, print all the related instructions or ensure that you can view the PDF version on another computer for reference.

Notes:

- To maintain the EMI integrity and cooling of the server, install a new power supply as soon as you remove the failing one. Cover the other bay with a shield if you just use one power supply to provide power.
- Your power supply might look slightly different from the illustrations in this topic.
- Use any documentation that comes with the new power supply and follow those instructions in addition to the instructions in this topic.

To install or replace a power supply, do the following:

1. Do one of the following:

- If you are installing a power supply, locate the bay for the power supply in the rear of your server. Insert your index finger and thumb into the holes in the metal shield that protects the bay and pull the shield out of the chassis. Store the shield in case that you later remove the power supply and need the shield to cover the bay.

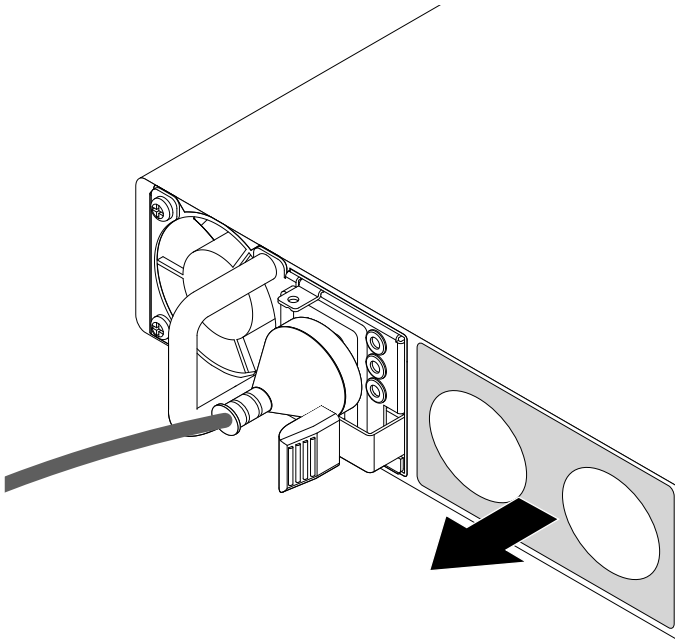

Figure 85. Removing the protective shield for the power supply bay

- If you are replacing a power supply, do the following:
  a. Locate the failing power supply in the rear of your server and disconnect the power cord from the failing power supply.

     Note: On each power supply, there are three status LEDs near the power cord connector. For information about the status LEDs, see “Power supply status LEDs” on page 44.

b. Press the release tab **1** in the direction as shown and carefully pull the handle **2** at the same time to slide the failing power supply out of the chassis.

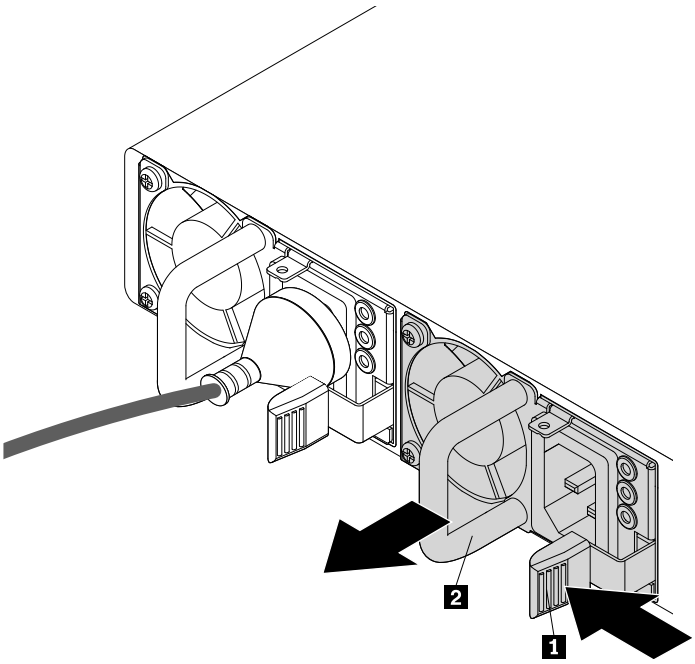

Figure 86. Removing a power supply

2. Touch the static-protective package that contains the new power supply to any unpainted surface on the outside of the server. Then, remove the new power supply from the package.

3. Note the orientation of the new power supply and then slide it into the chassis until it snaps into position.

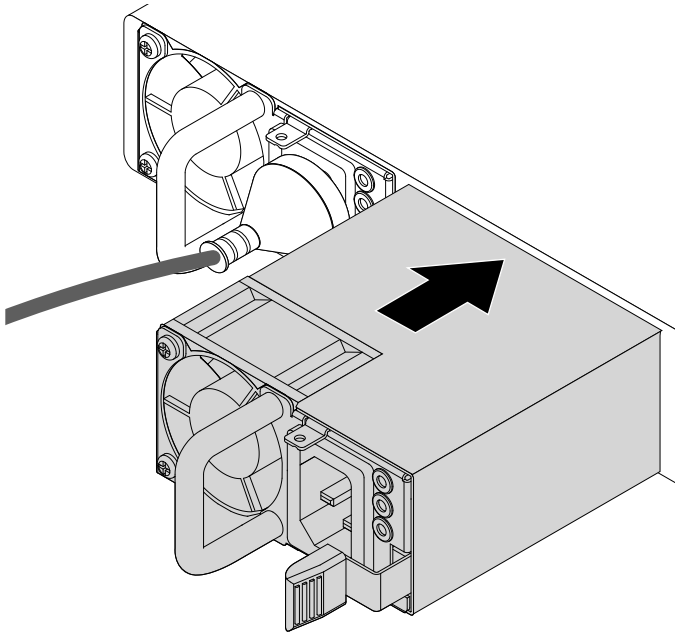

Figure 87. Installing a power supply

4. Connect the power cord to the power cord connector on the new power supply. Then, check the status LEDs near the power cord connector. For information about the status LEDs, see “Power supply status LEDs” on page 44.
5. If you are instructed to return the old power supply, follow all packaging instructions and use any packaging materials that are supplied to you for shipping.

What to do next:

- To work with another piece of hardware, go to the appropriate section.
- To complete the replacement, go to “Completing the parts replacement” on page 165.

Installing or replacing a heat sink

Attention: Do not open your server or attempt any repair before reading and understanding “Safety information” on page iii and “Guidelines” on page 59.

CAUTION:

The heat sink might be very hot. Turn off the server and wait several minutes to let the server cool before removing the server cover.

Before you begin, print all the related instructions or ensure that you can view the PDF version on another computer for reference.

Note: Depending on the model, the heat sink might look different from the illustrations in this topic.

To install or replace a heat sink, do the following:

1. Remove all external media from the drives and turn off all attached devices and the server. Then, disconnect all power cords from electrical outlets and disconnect all cables that are connected to the server.
2. Prepare your server. See “Removing or extending the server from the rack cabinet” on page 61.
3. Remove the server cover. See “Removing the server cover” on page 61.
4. Remove the cooling shroud. See “Removing and reinstalling the cooling shroud” on page 64.
5. Locate the heat sink or the place for installing the second heat sink. See “Server components” on page 25.
6. If you are replacing a heat sink, do the following:
   a. Remove the four screws that secure the heat sink to the system board. It is recommended that you carefully remove the four screws from the system board using the following method to avoid any possible damage to the system board.
      1) Partially remove screw 1, then completely remove screw 3, and then return to screw 1 and completely remove it.
      2) Partially remove screw 2, then completely remove screw 4, and then return to screw 2 and completely remove it.

      Note: The four screws are integrated parts of the heat sink. Do not try to remove the four screws from the heat sink.

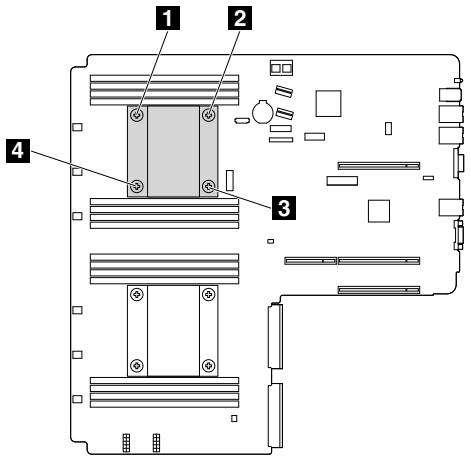

Figure 88. Removing the screws that secure the heat sink

   b. Gently twist the heat sink to free it from the microprocessor and then lift the heat sink off the system board.
   c. Lay aside the old heat sink.

      Notes:

      - Use a cleaning pad to wipe the thermal grease from the top of the microprocessor before installing the new heat sink. Dispose of the cleaning pad after all of the thermal grease is removed from the microprocessor.
      - When handling the heat sink, do not touch the thermal grease on the bottom of it.

7. Touch the static-protective package that contains the new heat sink to any unpainted surface on the outside of the server. Then, remove the new heat sink from the package.
8. Remove any protective cover that protects the thermal grease on the bottom of the new heat sink. Then, place the new heat sink on the system board so that the four screws on the new heat sink are aligned with the corresponding mounting studs on the system board.
9. Install the four screws to secure the new heat sink on the system board. It is recommended that you carefully install the four screws using the following method to avoid any possible damage to the system board.
   a. Partially tighten screw 1, then firmly tighten screw 3, and then return to screw 1 and firmly tighten it. Do not over-tighten the screws.
   b. Partially tighten screw 2, then firmly tighten screw 4, and then return to screw 2 and firmly tighten it. Do not over-tighten the screws.

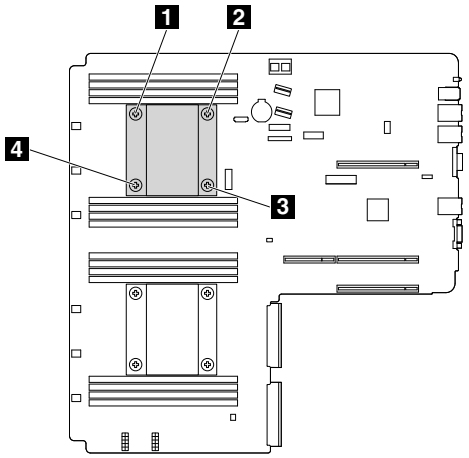

Figure 89. Installing the screws to secure the heat sink

10. If you are instructed to return the old heat sink, follow all packaging instructions and use any packaging materials that are supplied to you for shipping.

What to do next:

- To work with another piece of hardware, go to the appropriate section.
- To complete the installation or replacement, go to “Completing the parts replacement” on page 165.

Installing or replacing the microprocessor

This topic contains the following information:

- “Installing the second microprocessor” on page 120
- “Replacing the microprocessor” on page 124

Installing the second microprocessor

Attention: Do not open your server or attempt any repair before reading and understanding “Safety information” on page iii and “Guidelines” on page 59.

Depending on the model, your server might come with one or two microprocessors. For server models with one microprocessor, the microprocessor is installed in the microprocessor socket 1 and the microprocessor

socket 2 is protected by a plastic socket cover. You can purchase a microprocessor option kit from Lenovo and install the second microprocessor to expand system capabilities.

CAUTION:

Turn off the server and wait several minutes to let the server cool before removing the server cover.

Before you begin, print all the related instructions or ensure that you can view the PDF version on another computer for reference.

Notes:

- Ensure that you install the correct type of microprocessor option your server supports. See “Features” on page 7. When two microprocessors are installed, both must have the same core voltage and core speed.
- Use any documentation that comes with the microprocessor option kit and follow those instructions in addition to the instructions in this topic.
- Your microprocessor, socket, and socket cover might look slightly different from the illustrations in this topic.

To install the second microprocessor, do the following:

1. Remove all external media from the drives and turn off all attached devices and the server. Then, disconnect all power cords from electrical outlets and disconnect all cables that are connected to the server.
2. Prepare your server. See “Removing or extending the server from the rack cabinet” on page 61.
3. Remove the server cover. See “Removing the server cover” on page 61.
4. Remove the cooling shroud. See “Removing and reinstalling the cooling shroud” on page 64.
5. Locate the microprocessor socket 2 on the system board. See “System board components” on page 38.
6. Open the small handle **1** first by gently pressing down the handle a little bit and then pushing the handle inward to release it from the secured position. Then, open the other small handle **2** in the same way.

   Note: There are two marks on the microprocessor retainer. Open the small handle marked with ↶ first and then open the other small handle marked with 🔒. Always follow the correct sequence when you open the small handles.

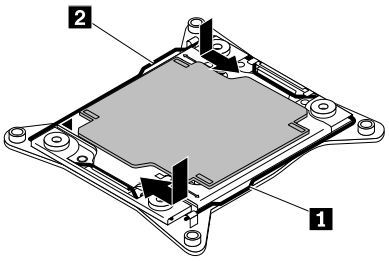

Figure 90. Opening the handles of the microprocessor retainer

7. Gently press the microprocessor retainer as shown to open it. Ensure that the small handles and the microprocessor retainer are in the fully open position.

   Note: Do not drop anything onto the microprocessor socket while it is exposed. The socket pins must be kept as clean as possible.

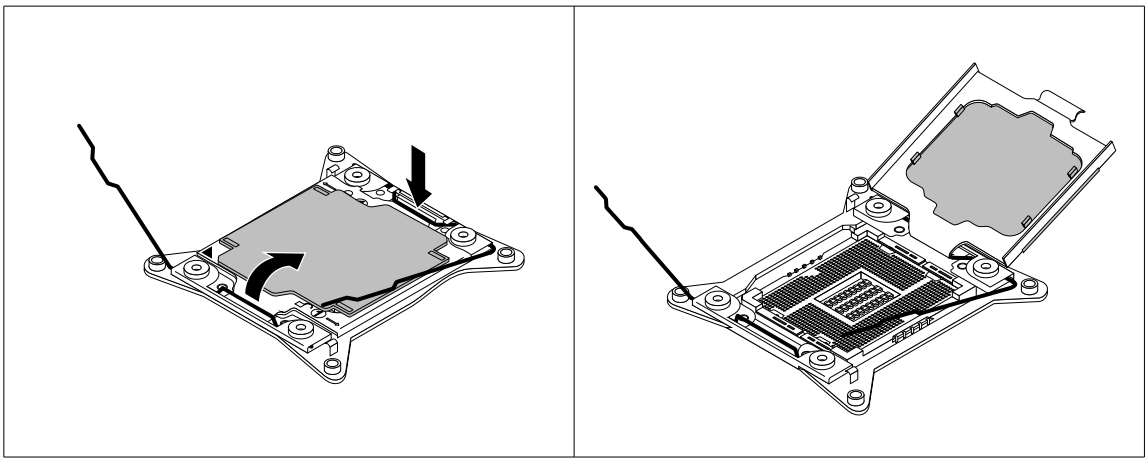

Figure 91. Opening the microprocessor retainer

8. Touch the static-protective package that contains the new microprocessor to any unpainted surface on the outside of the server. Then, remove the new microprocessor from the package.
9. Remove the new microprocessor from the protective cover that protects the gold contacts on the bottom of the new microprocessor. Do not touch the pins on the microprocessor socket and the gold contacts on the bottom of the new microprocessor.

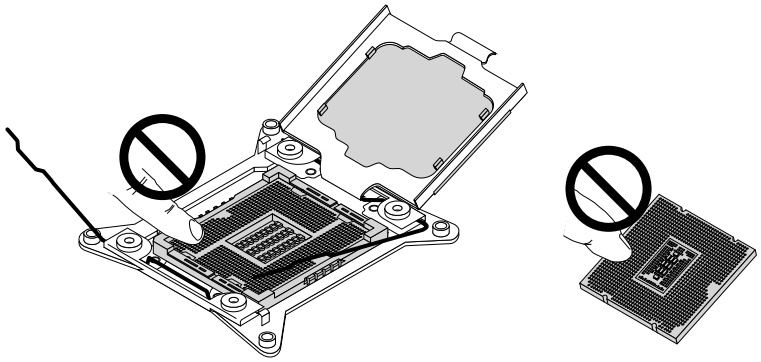

Figure 92. Do not touch the pins

10. Note the orientation of the new microprocessor. Hold the new microprocessor by its edges and align the notches 1 on it with the tabs 2 in the microprocessor socket. Then, carefully lower the new microprocessor straight down into the microprocessor socket.

    Note: The small triangle 3 on one corner of the new microprocessor is the microprocessor orientation indicator. The new microprocessor is in the correct orientation when this indicator faces the beveled corner 4 of the microprocessor socket.

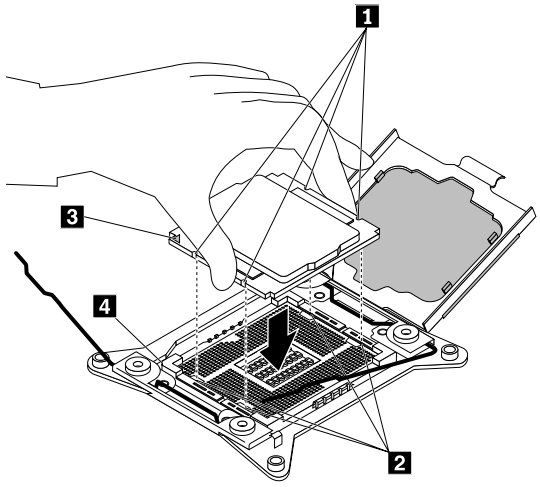

Figure 93. Installing the microprocessor

11. Remove the plastic microprocessor socket cover. Store the microprocessor socket cover in the event that you later remove the microprocessor and need the socket cover to protect the pins on the socket.

    Note: Do not remove the socket cover until you install a microprocessor into the socket. If you remove the microprocessor, install the socket cover or a new microprocessor in the first place.

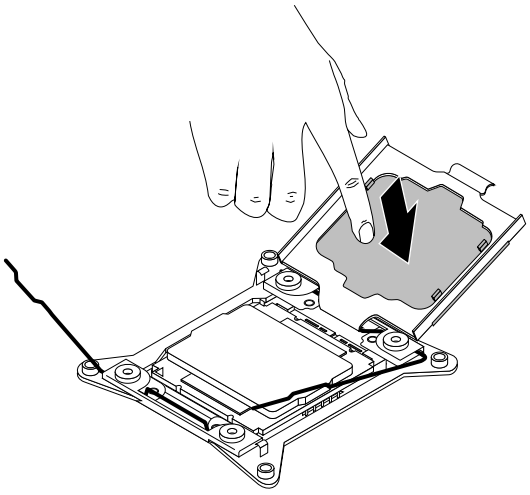

Figure 94. Removing the microprocessor socket cover

12. Close the microprocessor retainer. Close the small handle 1 first and then close the small handle 2. Ensure that the retainer is locked into position and the new microprocessor is securely seated in the socket.

    Note: There are two marks on the microprocessor retainer. Ensure that you close the small handle marked with first and then close the small handle marked with . Always follow the correct sequence when you close the small handles.

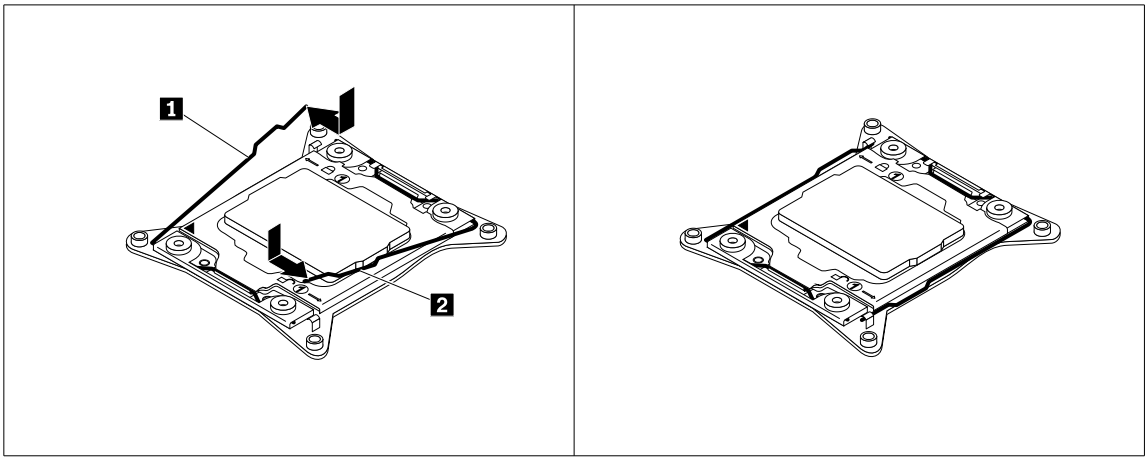

Figure 95. Securing the microprocessor in the socket

13. Install the new heat sink that comes with the microprocessor option kit. See “Installing or replacing a heat sink” on page 118.

What to do next:

- To work with another piece of hardware, go to the appropriate section.
- To complete the installation, go to “Completing the parts replacement” on page 165.

Replacing the microprocessor

Attention: Do not open your server or attempt any repair before reading and understanding “Safety information” on page iii and “Guidelines” on page 59.

CAUTION:

The heat sink and microprocessor might be very hot. Turn off the server and wait several minutes to let the server cool before removing the server cover.

Before you begin, print all the related instructions or ensure that you can view the PDF version on another computer for reference.

Notes:

- Ensure that the new microprocessor is the correct type your server supports. See “Features” on page 7. When two microprocessors are installed, both must have the same core voltage and core speed.
- Use any documentation that comes with the microprocessor option kit and follow those instructions in addition to the instructions in this topic.
- Your microprocessor, socket, and socket cover might look slightly different from the illustrations in this topic.

To replace the microprocessor, do the following:

1. Remove all external media from the drives and turn off all attached devices and the server. Then, disconnect all power cords from electrical outlets and disconnect all cables that are connected to the server.
2. Prepare your server. See “Removing or extending the server from the rack cabinet” on page 61.
3. Remove the server cover. See “Removing the server cover” on page 61.
4. Remove the cooling shroud. See “Removing and reinstalling the cooling shroud” on page 64.
5. Remove the heat sink. See “Installing or replacing a heat sink” on page 118.
6. Locate the microprocessor socket. Open the small handle **1** first by gently pressing down the handle a little bit and then pushing the handle inward to release it from the secured position. Then, open the other small handle **2** in the same way.

   Note: There are two marks on the microprocessor retainer. Open the small handle marked with 🔓 first and then open the other small handle marked with 🔒. Always follow the correct sequence when you open the small handles.

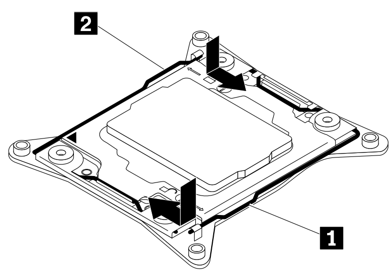

Figure 96. Opening the handles of the microprocessor retainer

7. Gently press the microprocessor retainer as shown to open it. Ensure that the small handles and the microprocessor retainer are in the fully open position.

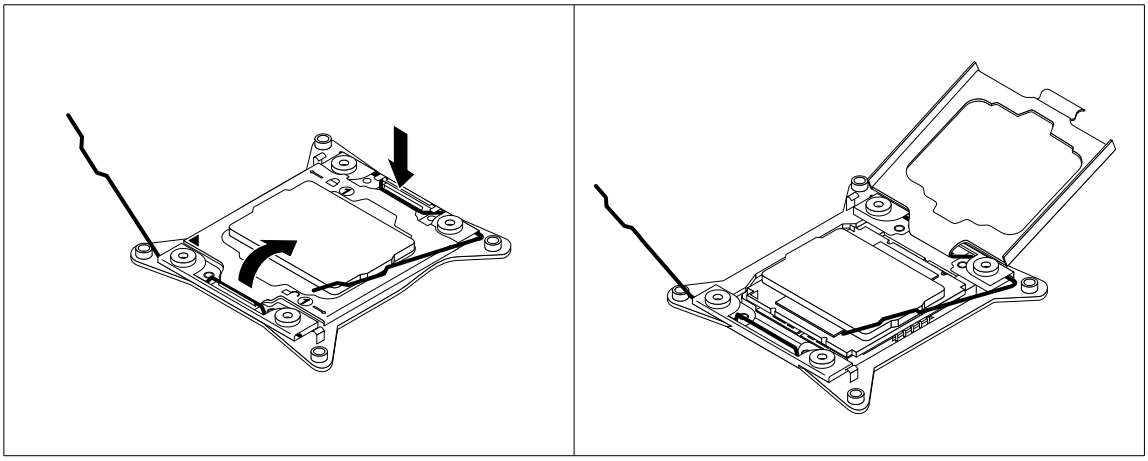

Figure 97. Opening the microprocessor retainer

8. Touch only the edges of the microprocessor and carefully lift it straight up and out of the microprocessor socket. Place the old microprocessor on a static-protective surface.

   Notes:

   - Do not touch the gold contacts on the bottom of the microprocessor.
   - Do not drop anything onto the microprocessor socket while it is exposed. The socket pins must be kept as clean as possible.

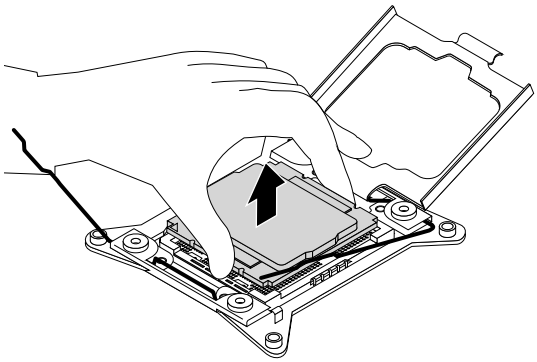

Figure 98. Removing the microprocessor

9. Touch the static-protective package that contains the new microprocessor to any unpainted surface on the outside of the server. Then, remove the new microprocessor from the package.

10. Remove the new microprocessor from the protective cover that protects the gold contacts on the bottom of the new microprocessor. Do not touch the pins on the microprocessor socket and the gold contacts on the bottom of the new microprocessor.

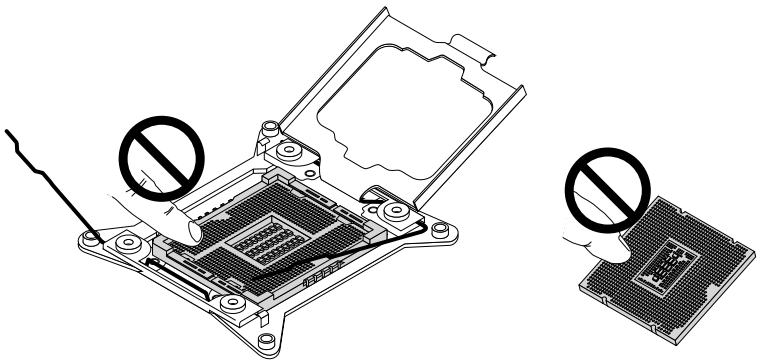

Figure 99. Do not touch the pins

11. Note the orientation of the new microprocessor. Hold the new microprocessor by its edges and align the notches **1** on it with the tabs **2** in the microprocessor socket. Then, carefully lower the new microprocessor straight down into the microprocessor socket.

    Note: The small triangle **3** on one corner of the new microprocessor is the microprocessor orientation indicator. The new microprocessor is in the correct orientation when this indicator faces the beveled corner **4** of the microprocessor socket.

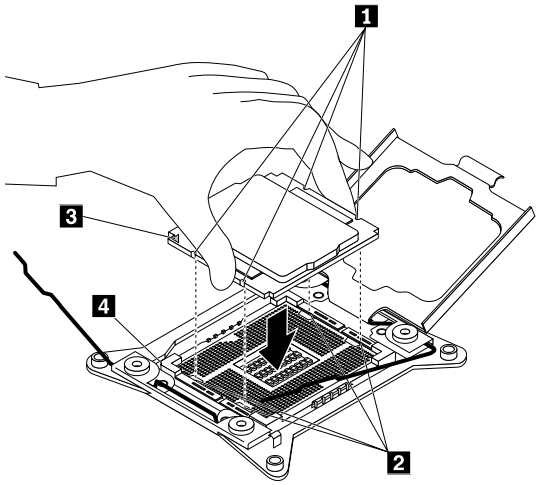

Figure 100. Installing the microprocessor

12. Close the microprocessor retainer. Close the small handle 1 first and then close the small handle 2. Ensure that the retainer is locked into position and the new microprocessor is securely seated in the socket.

    Note: There are two marks on the microprocessor retainer. Ensure that you close the small handle marked with 🔒 first and then close the small handle marked with 🔓. Always follow the correct sequence when you close the small handles.

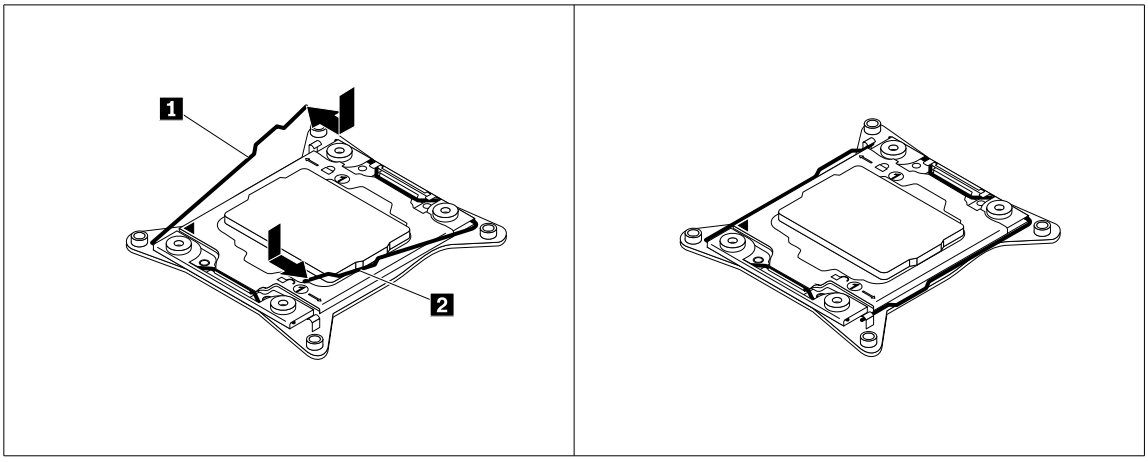

Figure 101. Securing the microprocessor in the socket

13. Use a cleaning pad to wipe the thermal grease from the removed heat sink. Dispose of the cleaning pad after all of the thermal grease is removed.
14. Use one of the following methods to apply appropriate amount of thermal grease to the top of the newly installed microprocessor in the shape of a cross or a circle as shown. Using too much or too little thermal grease can cause a thermal problem due to imperfect contact with the components.

    Notes:

    - Do not touch the thermal grease.
    - Keep the thermal grease off the system board.

Figure 102. Applying the thermal grease to the top of the microprocessor

15. Reinstall the heat sink. See “Installing or replacing a heat sink” on page 118.
16. If you are instructed to return the old microprocessor, follow all packaging instructions and use any packaging materials that are supplied to you for shipping.

What to do next:

- To work with another piece of hardware, go to the appropriate section.

- To complete the replacement, go to “Completing the parts replacement” on page 165.

Installing or removing the ThinkServer RAID Super Capacitor Module

Attention: Do not open your server or attempt any repair before reading and understanding “Safety information” on page iii and “Guidelines” on page 59.

The ThinkServer RAID Super Capacitor Module protects the cache memory on the installed ThinkServer RAID card. You can purchase a ThinkServer RAID Super Capacitor Module from Lenovo.

For a list of ThinkServer options, go to:
http://lenovoquickpick.com/usa/home/thinkserver/rack-and-tower-server

Installing the ThinkServer RAID Super Capacitor Module

Attention: Do not open your server or attempt any repair before reading and understanding “Safety information” on page iii and “Guidelines” on page 59.

Before you begin, print all the related instructions or ensure that you can view the PDF version on another computer for reference.

Notes:

- You can install two ThinkServer RAID Super Capacitor Modules on the cooling shroud.
- Use any documentation that comes with the ThinkServer RAID Super Capacitor Module and follow those instructions in addition to the instructions in this topic.

To install the ThinkServer RAID Super Capacitor Module, do the following:

1. Remove all external media from the drives and turn off all attached devices and the server. Then, disconnect all power cords from electrical outlets and disconnect all cables that are connected to the server.
2. Prepare your server. See “Removing or extending the server from the rack cabinet” on page 61.
3. Remove the server cover. See “Removing the server cover” on page 61.
4. Touch the static-protective package that contains the ThinkServer RAID Super Capacitor Module to any unpainted surface on the outside of the server. Then, take the ThinkServer RAID Super Capacitor Module out of the package.

5. Note the orientation of the ThinkServer RAID Super Capacitor Module. Then, gently press the tab on the cooling shroud as shown and install the ThinkServer RAID Super Capacitor Module onto the cooling shroud at the same time.

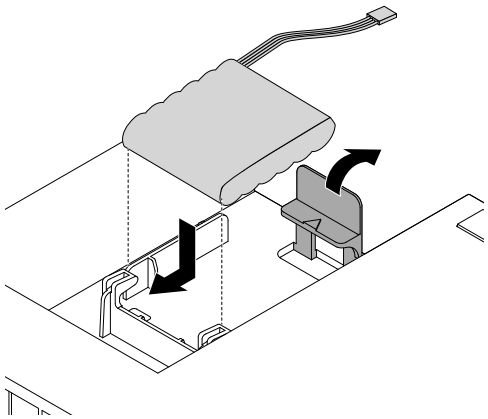

Figure 103. Installing the ThinkServer RAID Super Capacitor Module onto the cooling shroud

6. Connect the ThinkServer RAID Super Capacitor Module to a RAID card.

What to do next:

- To work with another piece of hardware, go to the appropriate section.
- To complete the installation, go to "Completing the parts replacement" on page 165.

Removing the ThinkServer RAID Super Capacitor Module

Attention: Do not open your server or attempt any repair before reading and understanding "Safety information" on page iii and "Guidelines" on page 59.

Before you begin, print all the related instructions or ensure that you can view the PDF version on another computer for reference.

Note: Use any documentation that comes with the ThinkServer RAID Super Capacitor Module and follow those instructions in addition to the instructions in this topic.

To remove the ThinkServer RAID Super Capacitor Module, do the following:

1. Remove all external media from the drives and turn off all attached devices and the server. Then, disconnect all power cords from electrical outlets and disconnect all cables that are connected to the server.
2. Prepare your server. See "Removing or extending the server from the rack cabinet" on page 61.
3. Remove the server cover. See "Removing the server cover" on page 61.
4. Disconnect the cable of the ThinkServer RAID Super Capacitor Module from the RAID card.

5. Gently press the tab on the cooling shroud as shown and remove the ThinkServer RAID Super Capacitor Module from the cooling shroud at the same time.

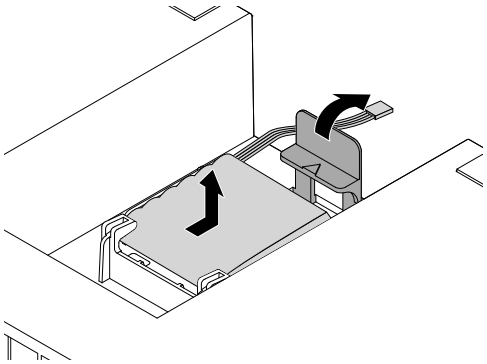

Figure 104. Removing the ThinkServer RAID Super Capacitor Module from the cooling shroud

6. If you are instructed to return the old ThinkServer RAID Super Capacitor Module, follow all packaging instructions and use any packaging materials that are supplied to you for shipping.

What to do next:

- To work with another piece of hardware, go to the appropriate section.
- To complete the removal procedure, go to "Completing the parts replacement" on page 165.

Installing or replacing a hot-swap drive

Attention: Do not open your server or attempt any repair before reading and understanding "Safety information" on page iii and "Guidelines" on page 59.

This topic provides instructions on how to install or replace a hot-swap drive, including hard disk drives and solid-state drives.

You can install or replace a hot-swap drive without turning off the server, which helps you avoid significant interruption to the operation of the system.

For a list of ThinkServer options, go to:
http://lenovoquickpick.com/usa/home/thinkserver/rack-and-tower-server

The EMI integrity and cooling of the server are protected by having all drive bays covered or occupied. The number of the installed drives in your server varies depending on the server model. The vacant bays are either covered by an EMI-protective panel or occupied by dummy trays. When installing a drive, save the removed dummy tray in case that you later remove the drive and need the dummy tray to cover the place.

Attention: An unoccupied drive bay without any other protection might impact the EMI integrity and cooling of the server, which might result in overheating or component damage. To maintain the EMI integrity and cooling of the server, install a new drive as soon as you remove the failing one or the dummy tray.

Before you begin, print all the related instructions or ensure that you can view the PDF version on another computer for reference.

Notes:

- The drive might be in horizontal or vertical position.

- Use any documentation that comes with the drive and follow those instructions in addition to the instructions in this topic.

To install or replace a hot-swap drive, do the following:

1. Review the following installation rules:
   - When you install drives, follow the order of the drive bay numbers. See “Front view of the server” on page 16 to locate the drive bays in your server.
   - For RAID configuration, the drives must be the same type with the same capacity if they are within a single RAID array. For more information, see “Configuring RAID” on page 54.
   - For drives with different capacities, install the drives following the order from the lowest capacity to the highest capacity.
2. Do one of the following:
   - If you are installing a new drive, locate the appropriate drive bay. Then, press the circled area 1 to open the handle of the dummy tray.

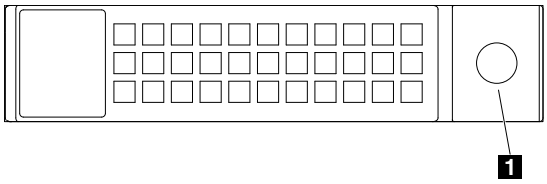

Figure 105. Opening the handle of a dummy tray

   - If you are replacing a drive, locate the drive you want to replace and press the release button 1 to open the handle of the drive.

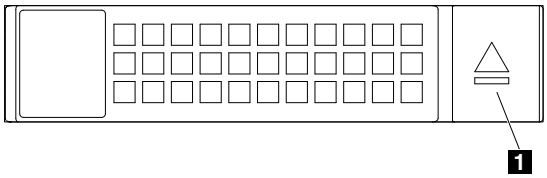

Figure 106. Opening the handle of a drive

3. Pull the handle and carefully slide the drive or the dummy tray out of the chassis.

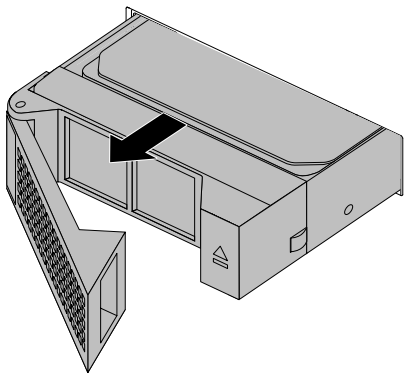

Figure 107. Removing the drive

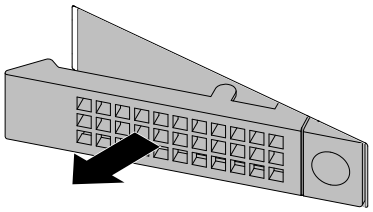

Figure 108. Removing the dummy tray

4. Touch the static-protective package that contains the new drive to any unpainted surface on the outside of the server. Then, take the new drive out of the package.

   Note: Do not touch the circuit board on the drive.

5. Slide the new drive into the drive bay from the front until it snaps into position. Then, completely close the handle.

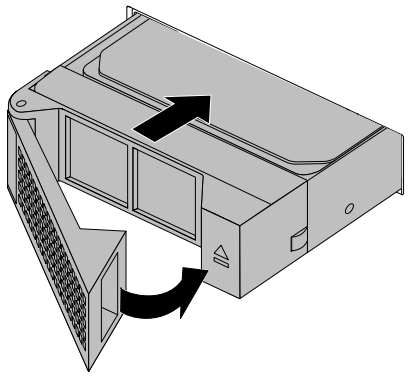

Figure 109. Installing the drive

6. Check the drive status LEDs to ensure that the drive is operating correctly. You might have to restart the server for the newly installed drive to be recognized. See “Hot-swap-drive status LEDs” on page 43. If the drive is faulty, reinstall or replace it until it is operating correctly.
7. Do one of the following:
   - If you are installing a drive, save the removed dummy tray in case that you later remove the drive and need a dummy tray to cover the drive bay.
   - If you are replacing a drive and are instructed to return the old drive, follow all packaging instructions and use any packaging materials that are supplied to you for shipping.

What to do next:

- To work with another piece of hardware, go to the appropriate section.
- To configure RAID, go to “Configuring RAID” on page 54.

Installing a 2.5-inch solid-state drive into a 3.5-inch-drive bay

Attention: Do not open your server or attempt any repair before reading and understanding “Safety information” on page iii and “Guidelines” on page 59.

Before you begin, print all the related instructions or ensure that you can view the PDF version on another computer for reference.

Note: Ensure that you have a 3.5-inch to 2.5-inch drive adapter and a 3.5-inch drive bracket available before the installation.

To install a 2.5-inch solid-state drive into a 3.5-inch-drive bay, do the following:

1. Locate the appropriate drive bay. See “Front view of the server” on page 16.

2. Press the circled area 1 to open the handle of the dummy tray.

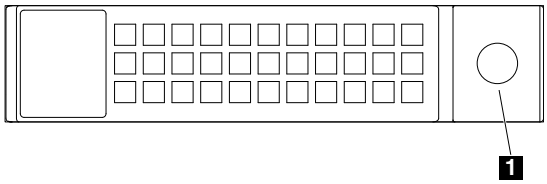

Figure 110. Opening the handle of the dummy tray

3. Pull the handle and carefully slide the dummy tray out of the front of the chassis.

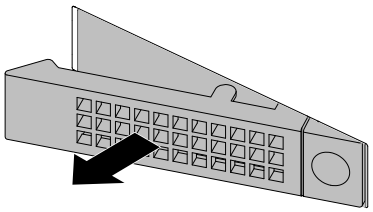

Figure 111. Removing the dummy tray

4. Touch the static-protective package that contains the 2.5-inch solid-state drive to any unpainted surface on the outside of the server. Then, take the solid-state drive out of the package.

   Note: Do not touch the circuit board on the solid-state drive.

5. Position the 2.5-inch solid-state drive into the 3.5-inch to 2.5-inch drive adapter as shown in the following illustration.

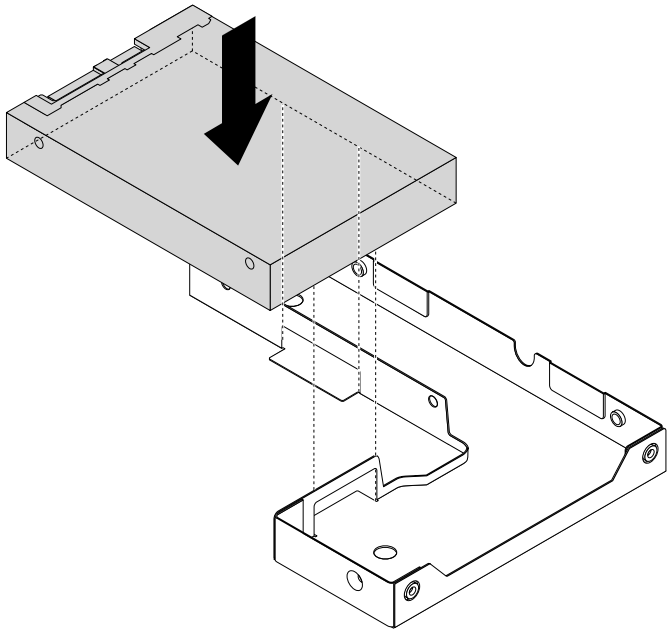

Figure 112. Positioning the 2.5-inch solid-state drive into the drive adapter

6. Align the two screw holes in the solid-state drive with the corresponding holes in the drive adapter. Then, install the two screws to secure the solid-state drive to the drive adapter.

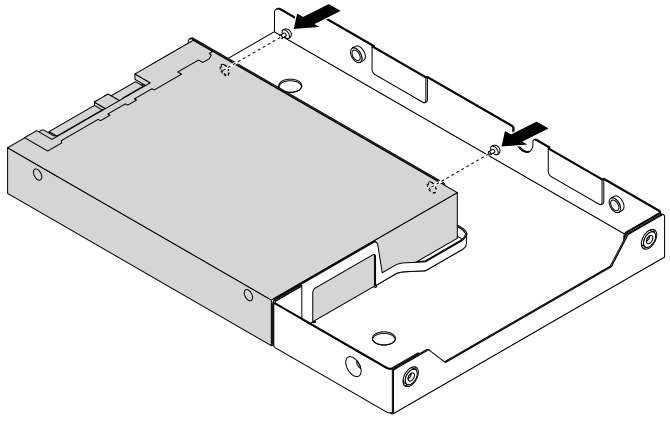

Figure 113. Installing the screws to secure the solid-state drive to the drive adapter

7. Position the drive adapter and the solid-state drive into the 3.5-inch drive bracket. Align the screw holes in the drive adapter and the solid-state drive with the corresponding holes in the bracket. Then, install the screws to secure the drive adapter and the solid-state drive into the bracket.

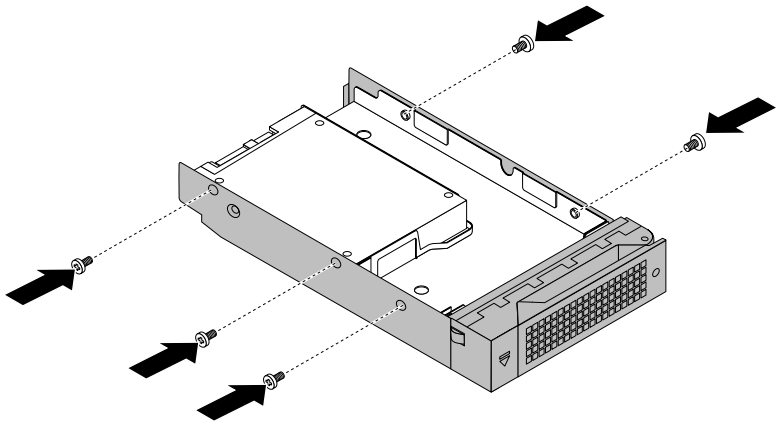

Figure 114. Installing the screws to secure the drive adapter and the solid-state drive to the bracket

8. Slide the bracket with the solid-state drive into the drive bay from the front until it snaps into position and then completely close the handle.

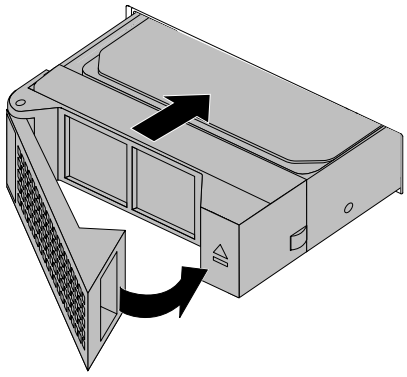

Figure 115. Installing the bracket with the solid-state drive

9. Check the drive status LEDs to ensure that the solid-state drive is operating correctly. You might have to restart the server for the newly installed solid-state drive to be recognized. See “Hot-swap-drive status LEDs” on page 43. If the solid-state drive is faulty, reinstall or replace it until it is operating correctly.
10. Save the removed dummy tray in case that you later remove the solid-state drive and need a dummy tray to cover the drive bay.

What to do next:

- To work with another piece of hardware, go to the appropriate section.
- To configure RAID, go to “Configuring RAID” on page 54.
- To complete the installation, go to “Completing the parts replacement” on page 165.

Replacing the hot-swap-drive backplane

Attention: Do not open your server or attempt any repair before reading and understanding “Safety information” on page iii and “Guidelines” on page 59.

Before you begin, print all the related instructions or ensure that you can view the PDF version on another computer for reference.

Notes:

- The hot-swap-drive backplane is sensitive to ESD. Ensure that you read and understand “Handling static-sensitive devices” on page 60 first and carefully perform the operation.
- The following procedure is based on the scenario that you want to replace the backplane for up to eight 3.5-inch drives. The procedure is similar if your server is installed with the following types of backplanes:
  - Backplane for up to sixteen 2.5-inch drives
  - Backplane for up to eight 2.5-inch drives

To replace the backplane, do the following:

1. Remove all external media from the drives and turn off all attached devices and the server. Then, disconnect all power cords from electrical outlets and disconnect all cables that are connected to the server.
2. Prepare your server. See “Removing or extending the server from the rack cabinet” on page 61.
3. Remove the server cover. See “Removing the server cover” on page 61.
4. Locate the backplane. See “Server components” on page 25.
5. Remove all the installed drives and dummy trays (if any) from the drive bays. See “Installing or replacing a hot-swap drive” on page 131.
6. Record the cable connections on the backplane and then disconnect all cables from the backplane.
7. Press the two latches in the direction as shown until the latches are disengaged from the chassis.

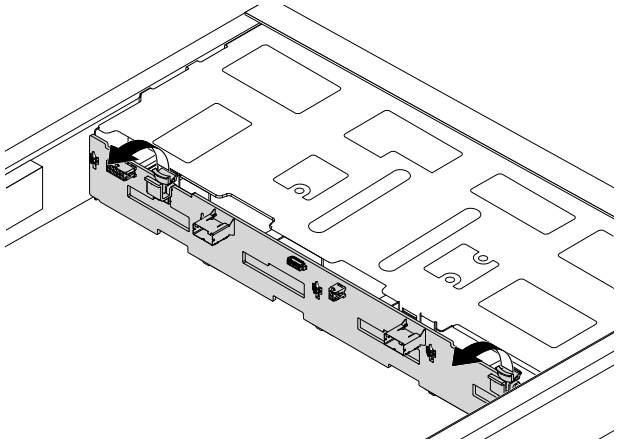

Figure 116. Releasing the backplane

8. Carefully lift the backplane straight up a little bit so that the small hooks 1 on the chassis are aligned with the corresponding holes in the backplane. Then, move the backplane to the rear of the chassis to release the backplane from the hooks 1.

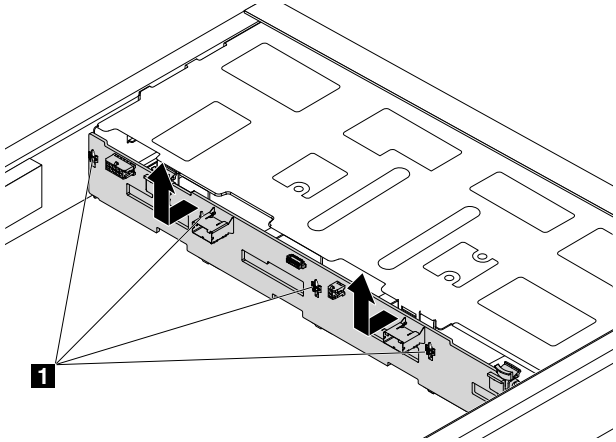

Figure 117. Removing the backplane

9. Touch the static-protective package that contains the new backplane to any unpainted surface on the outside of the server. Then, remove the new backplane from the package.

   Note: Carefully handle the backplane by its edges.

10. Note the orientation of the new backplane. Ensure that the small hooks 1 on the chassis pass through the corresponding holes in the new backplane. Then, carefully press the new backplane straight down so that it is secured by the latches 2 on the backplane.

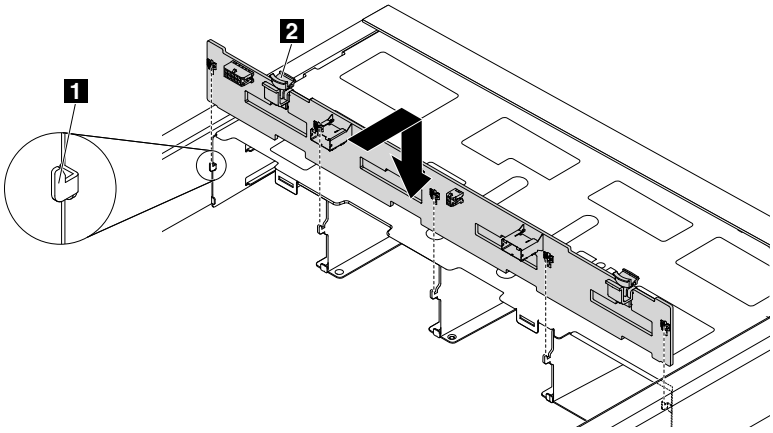

Figure 118. Installing the backplane

11. Reinstall all the drives and dummy trays (if any) in the drive bays. See “Installing or replacing a hot-swap drive” on page 131.
12. Refer to your note to connect the cables to the new backplane.
13. If you are instructed to return the old backplane, follow all packaging instructions and use any packaging materials that are supplied to you for shipping.

What to do next:

- To work with another piece of hardware, go to the appropriate section.
- To complete the replacement, go to “Completing the parts replacement” on page 165.

Replacing the front panel board

Attention: Do not open your server or attempt any repair before reading and understanding “Safety information” on page iii and “Guidelines” on page 59.

Before you begin, print all the related instructions or ensure that you can view the PDF version on another computer for reference.

Notes:

- The front panel board is extremely sensitive to ESD. Ensure that you read and understand “Handling static-sensitive devices” on page 60 first and carefully perform the operation.
- Depending on the model, your server and the front panel board might look different from the illustrations in this topic.

To replace the front panel board, do the following:

1. Remove all external media from the drives and turn off all attached devices and the server. Then, disconnect all power cords from electrical outlets and disconnect all cables that are connected to the server.
2. Prepare your server. See “Removing or extending the server from the rack cabinet” on page 61.
3. Remove the server cover. See “Removing the server cover” on page 61.
4. Locate the front panel board. See “Server components” on page 25.
5. Disconnect the front-panel-board cables from the system board.
6. Remove the two screws that secure the front panel board and then remove the front panel board from the chassis.

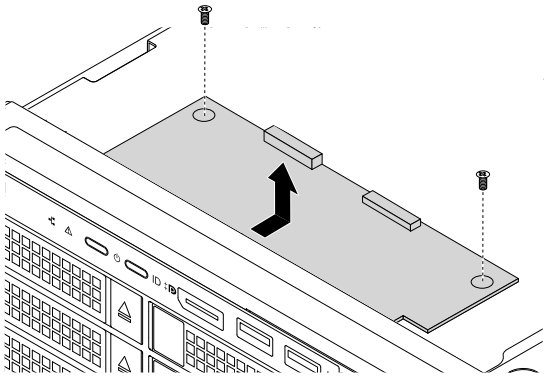

Figure 119. Removing the front panel board

7. Touch the static-protective package that contains the new front panel board to any unpainted surface on the outside of the server. Then, take the new front panel board out of the package.

   Note: Carefully handle the front panel board by its edges.

8. Carefully position the new front panel board on the chassis. Ensure that the front controls, connectors, and LEDs are inserted into the corresponding holes in the front bezel. Align the two screw holes in the new front panel board with the corresponding mounting studs on the chassis. Then, install the screws to secure the front panel board.

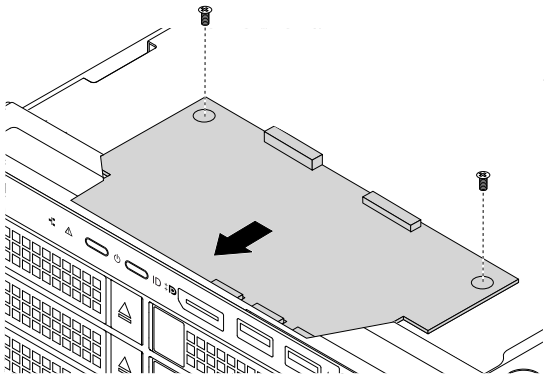

Figure 120. Installing the front panel board

9. Connect the front-panel-board cables to the system board. See “System board components” on page 38.
10. If you are instructed to return the old front panel board, follow all packaging instructions and use any packaging materials that are supplied to you for shipping.

What to do next:

- To work with another piece of hardware, go to the appropriate section.
- To complete the replacement, go to “Completing the parts replacement” on page 165.

Installing or removing the intrusion switch

The intrusion switch informs you that the server cover is not properly installed or closed by creating an event in the system event log (SEL). You can purchase an intrusion switch from Lenovo.

For a list of ThinkServer options, go to:
http://lenovoquickpick.com/usa/home/thinkserver/rack-and-tower-server

Installing the intrusion switch

Attention: Do not open your server or attempt any repair before reading and understanding “Safety information” on page iii and “Guidelines” on page 59.

Before you begin, print all the related instructions or ensure that you can view the PDF version on another computer for reference.

Note: Use any documentation that comes with the intrusion switch and follow those instructions in addition to the instructions in this topic.

To install the intrusion switch, do the following:

1. Remove all external media from the drives and turn off all attached devices and the server. Then, disconnect all power cords from electrical outlets and disconnect all cables that are connected to the server.
2. Prepare your server. See “Removing or extending the server from the rack cabinet” on page 61.

3. Remove the server cover. See “Removing the server cover” on page 61.
4. Touch the static-protective package that contains the intrusion switch and the bracket to any unpainted surface on the outside of the server. Then, take the intrusion switch and the bracket out of the package.
5. Note the orientation and insert the intrusion switch into the bracket.

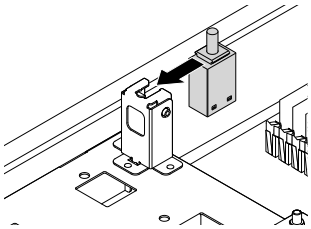

Figure 121. Inserting the intrusion switch into the bracket

6. Connect the intrusion switch cable to the intrusion switch connector on the system board. See “System board components” on page 38.

What to do next:

- To work with another piece of hardware, go to the appropriate section.
- To complete the installation, go to “Completing the parts replacement” on page 165.

Removing the intrusion switch

Attention: Do not open your server or attempt any repair before reading and understanding “Safety information” on page iii and “Guidelines” on page 59.

Before you begin, print all the related instructions or ensure that you can view the PDF version on another computer for reference.

Notes:

- If you remove the intrusion switch, you will not get the warning message when logging in to your server with the cover removed.
- Use any documentation that comes with the intrusion switch and follow those instructions in addition to the instructions in this topic.

To remove the intrusion switch, do the following:

1. Remove all external media from the drives and turn off all attached devices and the server. Then, disconnect all power cords from electrical outlets and disconnect all cables that are connected to the server.
2. Prepare your server. See “Removing or extending the server from the rack cabinet” on page 61.
3. Remove the server cover. See “Removing the server cover” on page 61.
4. Locate the intrusion switch and disconnect the cable from the system board.

5. Press the intrusion switch in the direction as shown to disengage it from the bracket.

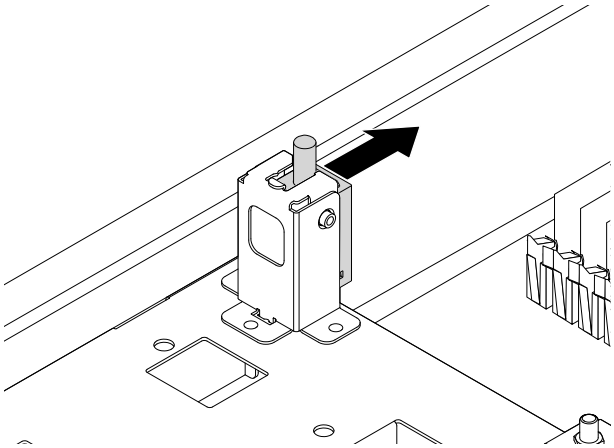

Figure 122. Removing the intrusion switch

6. If you are instructed to return the old intrusion switch, follow all packaging instructions and use any packaging materials that are supplied to you for shipping.

What to do next:

- To work with another piece of hardware, go to the appropriate section.
- To complete the removal procedure, go to "Completing the parts replacement" on page 165.

Installing or replacing the optical drive

This topic contains the following information:

- "Installing or replacing the optical drive for server models with 3.5-inch-drive bays" on page 144
- "Installing or replacing the optical drive for server models with 2.5-inch-drive bays" on page 146

The EMI integrity and cooling of the server are protected by having all drive bays covered or occupied. When you install the optical drive, save the removed optical drive dummy from the chassis. If you later remove the drive, you will need the dummy to cover the drive bay.

Attention: An unoccupied drive bay without any other protection might impact the EMI integrity and cooling of the server, which might result in overheating or component damage. To maintain the EMI integrity and cooling of the server, install a new optical drive as soon as you remove the failing one or the optical drive dummy.

CAUTION:
When laser products (such as CD-ROMs, DVD drives, fiber optic devices, or transmitters) are installed, note the following:

- **Do not remove the covers. Removing the covers of the laser product could result in exposure to hazardous laser radiation. There are no serviceable parts inside the device.**
- **Use of controls or adjustments or performance of procedures other than those specified herein might result in hazardous radiation exposure.**

DANGER

Some laser products contain an embedded Class 3A or Class 3B laser diode. Note the following:

Laser radiation when open. Do not stare into the beam, do not view directly with optical instruments, and avoid direct exposure to the beam.

Installing or replacing the optical drive for server models with 3.5-inch-drive bays

Attention: Do not open your server or attempt any repair before reading and understanding "Safety information" on page iii and "Guidelines" on page 59.

Before you begin, print all the related instructions or ensure that you can view the PDF version on another computer for reference.

To install or replace the optical drive, do the following:

1. Remove all external media from the drives and turn off all attached devices and the server. Then, disconnect all power cords from electrical outlets and disconnect all cables that are connected to the server.
2. Prepare your server. See "Removing or extending the server from the rack cabinet" on page 61.
3. Remove the server cover. See "Removing the server cover" on page 61.
4. Locate the optical drive or dummy optical drive. See "Server components" on page 25.
5. If you are replacing the optical drive, disconnect the cable from the rear of the optical drive first. Press the release button **1** inward and then slide the optical drive or the dummy out from the front of the server.

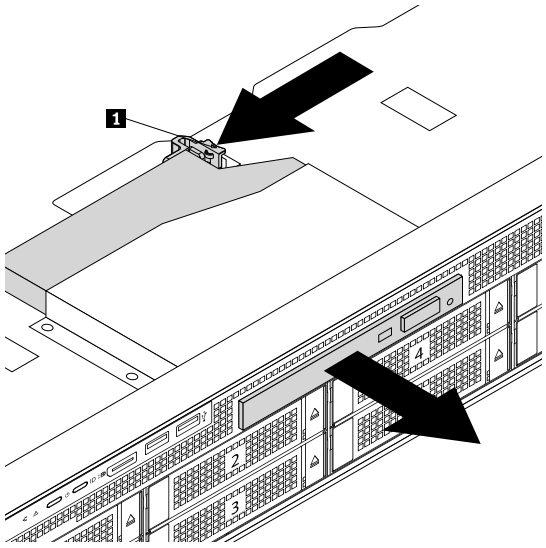

Figure 123. Removing the optical drive or the dummy optical drive

6. Touch the static-protective package that contains the new optical drive to any unpainted surface on the outside of the server. Then, take the new optical drive out of the package.
7. Slide the new optical drive into the drive bay from the front until it is secured by the release button **1**.

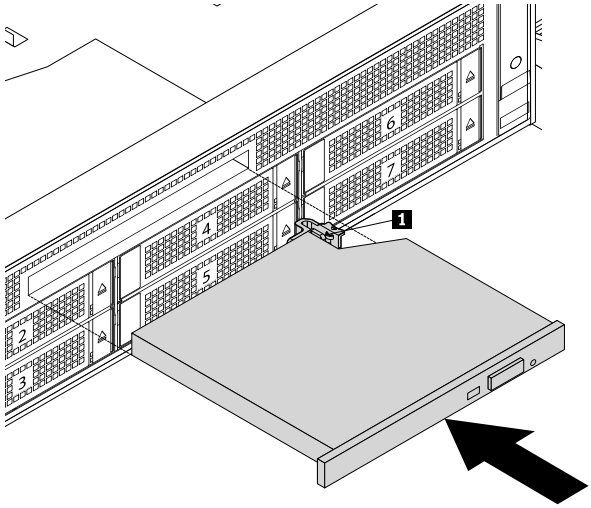

Figure 124. Installing the optical drive

8. Attach the connector **1** to the rear of the optical drive.

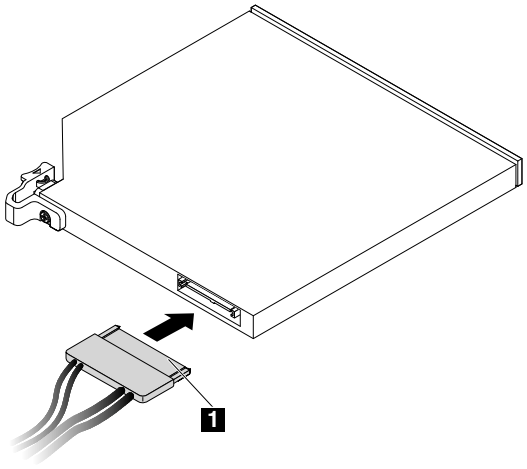

Figure 125. Attaching the connector to the rear of the optical drive

9. If you are installing an optical drive, do the following:
   a. Connect the 2-pin power connector on the other end of the cable to the 2-pin power connector on the backplane. See “Backplane for up to eight 2.5-inch drives” on page 37.
   b. Connect the SATA connector on the other end of the cable to the appropriate SATA connector on the system board. See “System board components” on page 38.
10. If you are instructed to return the old optical drive, follow all packaging instructions and use any packaging materials that are supplied to you for shipping.

What to do next:

- To work with another piece of hardware, go to the appropriate section.
- To complete the replacement, go to “Completing the parts replacement” on page 165.

Installing or replacing the optical drive for server models with 2.5-inch-drive bays

This topic contains the following information:

- “Removing the drive partition” on page 146
- “Installing the optical drive” on page 147
- “Replacing the optical drive” on page 151

Removing the drive partition

Attention: Do not open your server or attempt any repair before reading and understanding “Safety information” on page iii and “Guidelines” on page 59.

Before you begin, print all the related instructions or ensure that you can view the PDF version on another computer for reference.

To remove the drive partition, do the following:

1. Remove all external media from the drives and turn off all attached devices and the server. Then, disconnect all power cords from electrical outlets and disconnect all cables that are connected to the server.
2. Prepare your server. See “Removing or extending the server from the rack cabinet” on page 61.
3. Remove the server cover. See “Removing the server cover” on page 61.
4. Locate the drive partition **1**. Then remove the installed 2.5-inch drives and dummy trays (if any) from the drive trays 16–23.

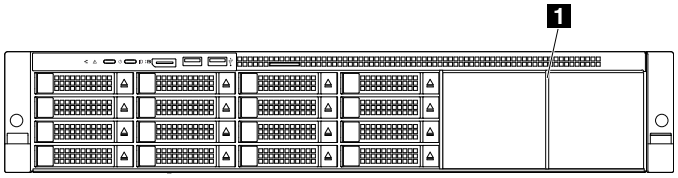

Figure 126. Locating the drive partition **1**

5. Remove the three screws **1**.

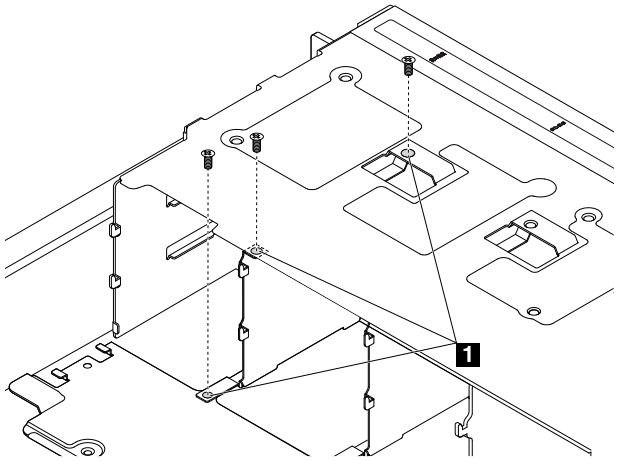

Figure 127. Removing the three screws **1**

6. Pivot the drive partition in the direction as shown. Then remove it from the rear of the drive bays.

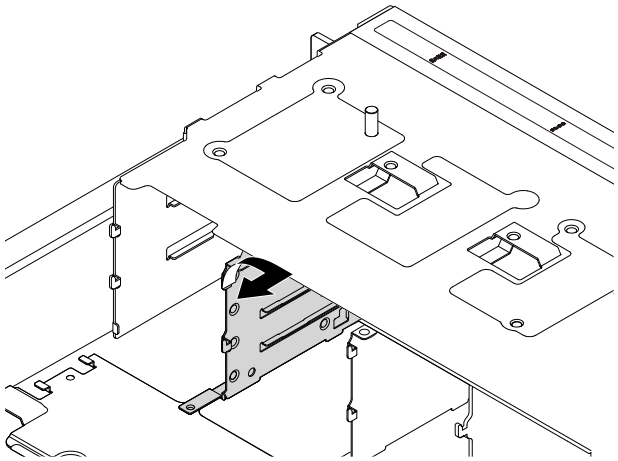

Figure 128. Removing the drive partition

7. Store the drive partition in case that you later remove the optical drive cage and install 2.5-inch drives and dummy trays (if any).

What to do next:

- To work with another piece of hardware, go to the appropriate section.
- To complete the removal procedure, go to "Completing the parts replacement" on page 165.

Installing the optical drive

Attention: Do not open your server or attempt any repair before reading and understanding "Safety information" on page iii and "Guidelines" on page 59.

Before you begin, print all the related instructions or ensure that you can view the PDF version on another computer for reference.

Notes:

- You can install an optical drive into the optical drive cage or the tape drive cage.
- Depending on the model, your server might look slightly different from the illustrations in this topic.
- Use any documentation that comes with the optical drive and follow those instructions in addition to the instructions in this topic.

To install the optical drive, do the following:

1. Remove all external media from the drives and turn off all attached devices and the server. Then, disconnect all power cords from electrical outlets and disconnect all cables that are connected to the server.
2. Prepare your server. See “Removing or extending the server from the rack cabinet” on page 61.
3. Remove the server cover. See “Removing the server cover” on page 61.
4. If you are installing the optical drive into the optical drive cage, remove the drive partition **2**. If you are installing the optical drive into the tape drive cage, remove the drive partitions **1** and **2**. See “Removing the drive partition” on page 146.

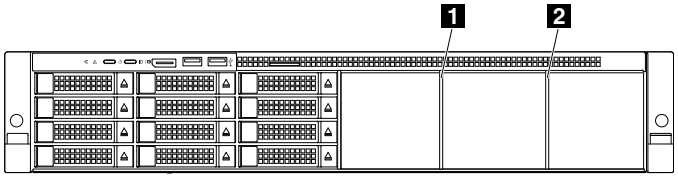

Figure 129. Removing the drive partitions

5. Touch the static-protective package that contains the optical drive cage or the tape drive cage to any unpainted surface on the outside of the server. Then, take the optical drive cage or the tape drive cage out of the package.
6. Slide the optical drive cage or the tape drive cage into the chassis from the front of the server.

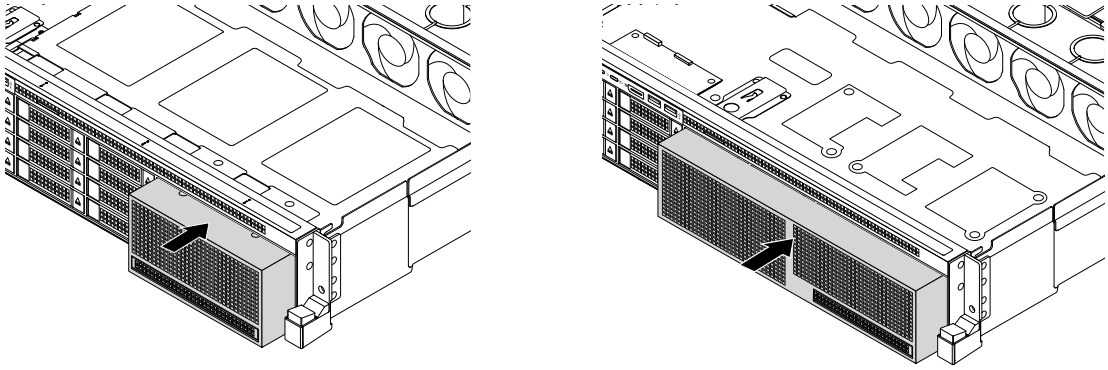

Figure 130. Installing the optical drive cage or the tape drive cage into the chassis

7. Install the screws to secure the optical drive cage or the tape drive cage to the chassis.

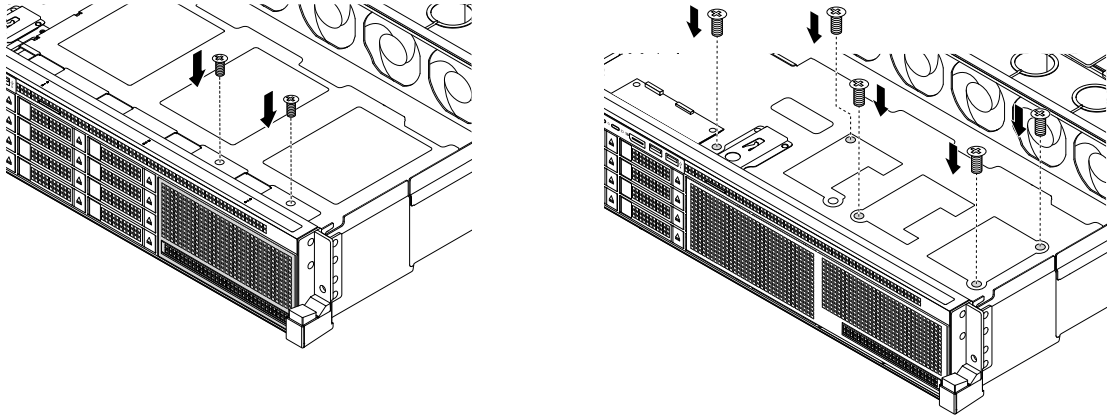

Figure 131. Installing the screws to secure the optical drive cage or the tape drive cage

8. Press the retaining clip in the direction as shown and slide the optical drive dummy to the front of the server at the same time. Then, remove the optical drive dummy out of the drive cage.

   Note: To show the main parts clearly, not all components are illustrated in the following figures.

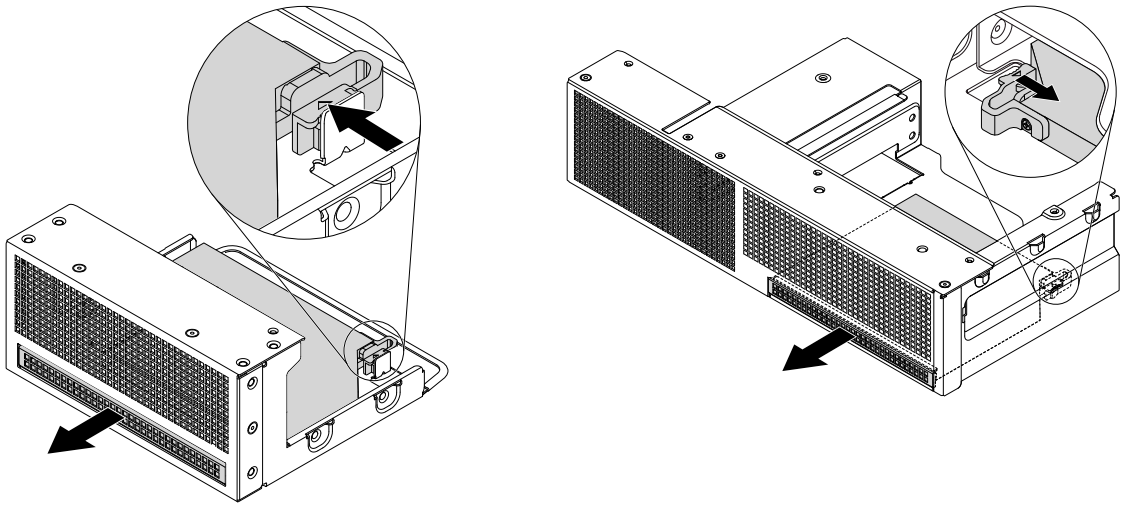

Figure 132. Removing the optical drive dummy

9. Touch the static-protective package that contains the optical drive to any unpainted surface on the outside of the server. Then, take the optical drive out of the package.

10. Slide the new optical drive into the optical drive bay from the front until it snaps into position.

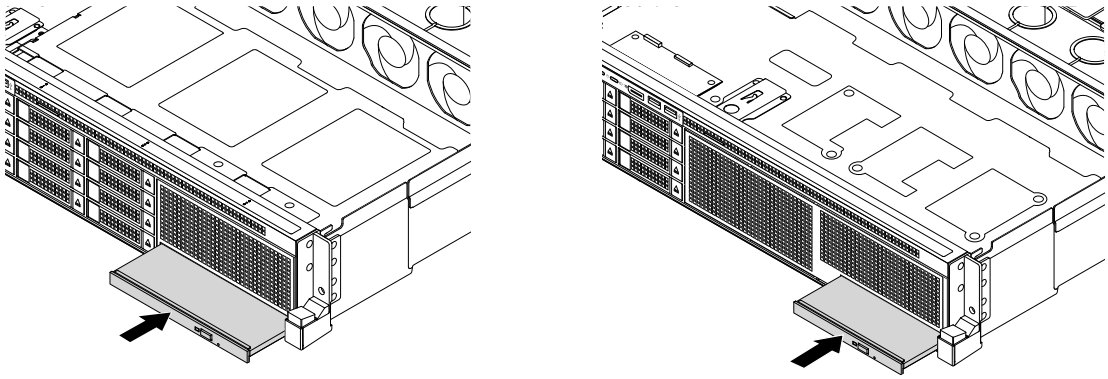

Figure 133. Installing the optical drive

11. Do the following to connect the optical drive to your server:
    a. Connect the connector **1** on one end of the cable to the rear of the optical drive.

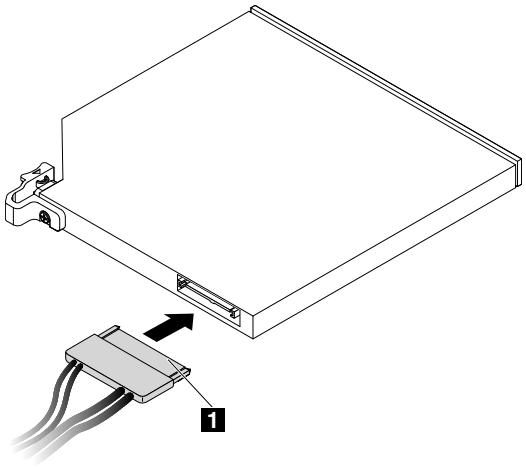

*Figure 134. Connecting the connector **1** on one end of the cable to the rear of the optical drive*

    b. Connect the 2-pin power connector on the other end of the cable to the 2-pin power connector on the backplane. See “Backplane for up to eight 2.5-inch drives” on page 37.
    c. Connect the SATA connector on the other end of the cable to the appropriate SATA connector on the system board. See “System board components” on page 38.
12. Save the removed optical drive dummy in case that you later remove the drive and need the dummy to cover the drive bay.

What to do next:

- To work with another piece of hardware, go to the appropriate section.
- To complete the installation, go to “Completing the parts replacement” on page 165.

Replacing the optical drive

Attention: Do not open your server or attempt any repair before reading and understanding “Safety information” on page iii and “Guidelines” on page 59.

Before you begin, print all the related instructions or ensure that you can view the PDF version on another computer for reference.

Notes:

- Depending on the model, your server might look slightly different from the illustrations in this topic.
- Use any documentation that comes with the optical drive and follow those instructions in addition to the instructions in this topic.

To replace the optical drive, do the following:

1. Remove all external media from the drives and turn off all attached devices and the server. Then, disconnect all power cords from electrical outlets and disconnect all cables that are connected to the server.
2. Prepare your server. See “Removing or extending the server from the rack cabinet” on page 61.
3. Remove the server cover. See “Removing the server cover” on page 61.
4. locate the failing optical drive and disconnect the cable from the rear of the optical drive. Remove any parts and disconnect any cables that might impede your access to the optical drive. See “Front view of the server” on page 16.
5. Press the retaining clip in the direction as shown and slide the optical drive to the front of the server at the same time. Then, remove the optical drive out of the drive cage.

   Note: To show the main parts clearly, not all components are illustrated in the following figures.

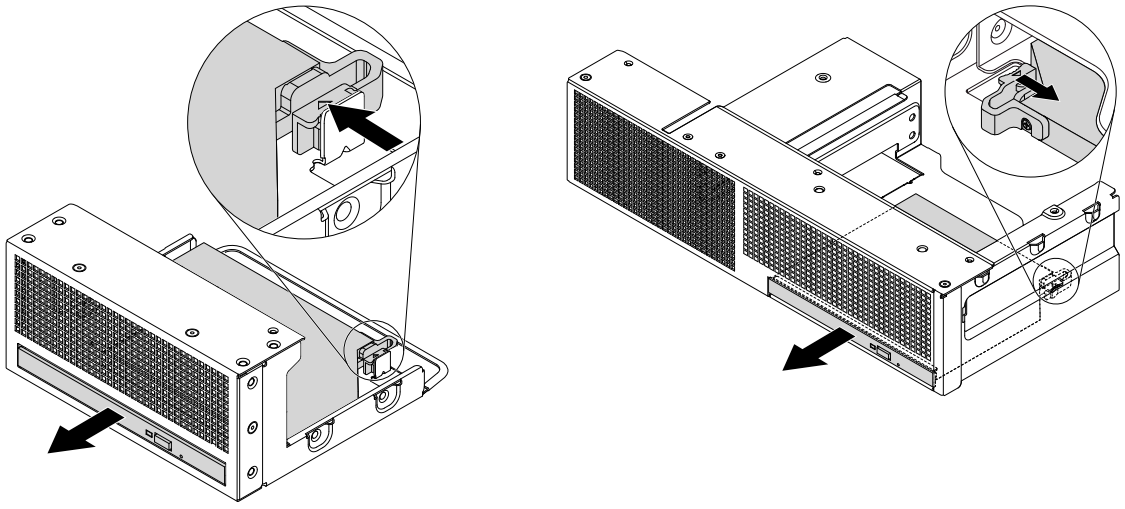

Figure 135. Removing the optical drive

6. Touch the static-protective package that contains the new optical drive to any unpainted surface on the outside of the server. Then, take the new optical drive out of the package.

7. Slide the new optical drive into the optical drive bay from the front until it snaps into position.

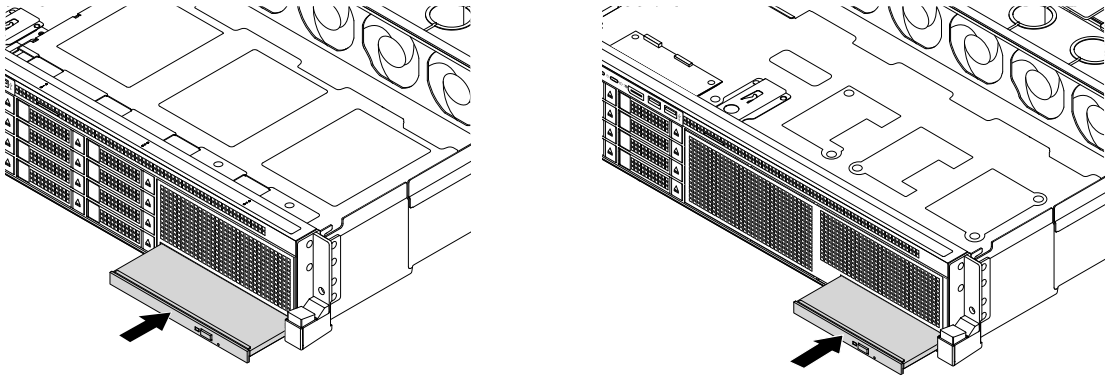

Figure 136. Installing the optical drive

8. Connect the connector **1** to the rear of the optical drive.

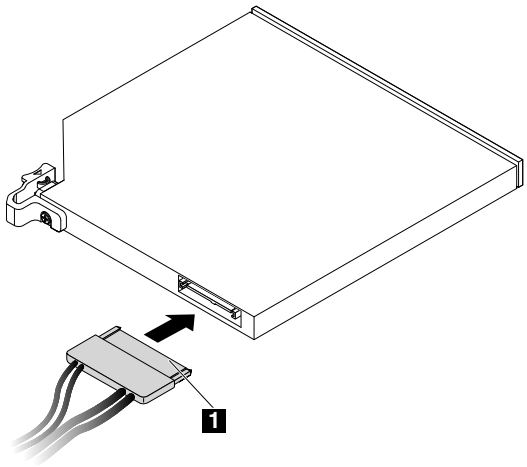

*Figure 137. Connecting the connector **1** to the rear of the optical drive*

9. If you are instructed to return the old optical drive, follow all packaging instructions and use any packaging materials that are supplied to you for shipping.

What to do next:

- To work with another piece of hardware, go to the appropriate section.
- To complete the replacement, go to “Completing the parts replacement” on page 165.

Installing or replacing the tape drive

Note: This topic applies to server models with 2.5-inch-drive bays.

This topic contains the following information:

- “Installing the tape drive” on page 153

- “Replacing the tape drive” on page 156

The EMI integrity and cooling of the server are protected by having all drive bays covered or occupied. When you install the tape drive, save the removed protective shield from the chassis. If you later remove the drive, you will need the shield to cover the drive bay.

Attention: An unoccupied drive bay without any other protection might impact the EMI integrity and cooling of the server, which might result in overheating or component damage. To maintain the EMI integrity and cooling of the server, install a new tape drive as soon as you remove the failing one or the protective shield.

Installing the tape drive

Attention: Do not open your server or attempt any repair before reading and understanding “Safety information” on page iii and “Guidelines” on page 59.

Before you begin, print all the related instructions or ensure that you can view the PDF version on another computer for reference.

Notes:

- Depending on the model, your server might look slightly different from the illustrations in this topic.
- Use any documentation that comes with the tape drive and follow those instructions in addition to the instructions in this topic.

To install the tape drive, do the following:

1. Remove all external media from the drives and turn off all attached devices and the server. Then, disconnect all power cords from electrical outlets and disconnect all cables that are connected to the server.
2. Prepare your server. See “Removing or extending the server from the rack cabinet” on page 61.
3. Remove the server cover. See “Removing the server cover” on page 61.
4. Remove the drive partitions 1 and 2. See “Removing the drive partition” on page 146.

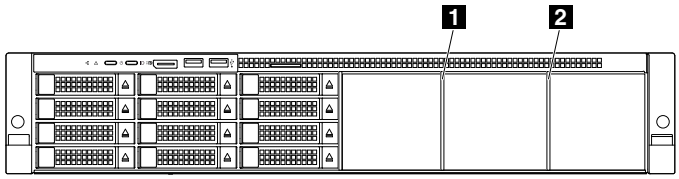

Figure 138. Removing the drive partitions

5. Touch the static-protective packages that contain the tape drive and the tape drive cage to any unpainted surface on the outside of the server. Then, take the tape drive and the tape drive cage out of the packages.

6. Remove the metal shield that protects the tape drive bay. Then, slide the tape drive into the tape drive bay.

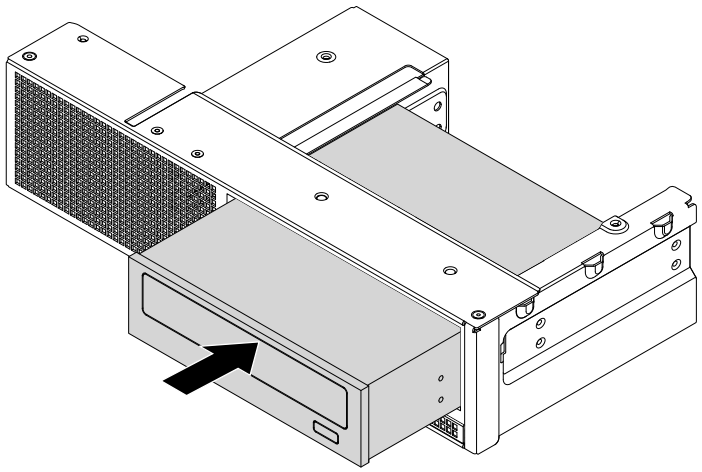

Figure 139. Installing the tape drive into the tape drive bay

7. Install four screws on each side of the tape drive to secure the tape drive to the tape drive cage.

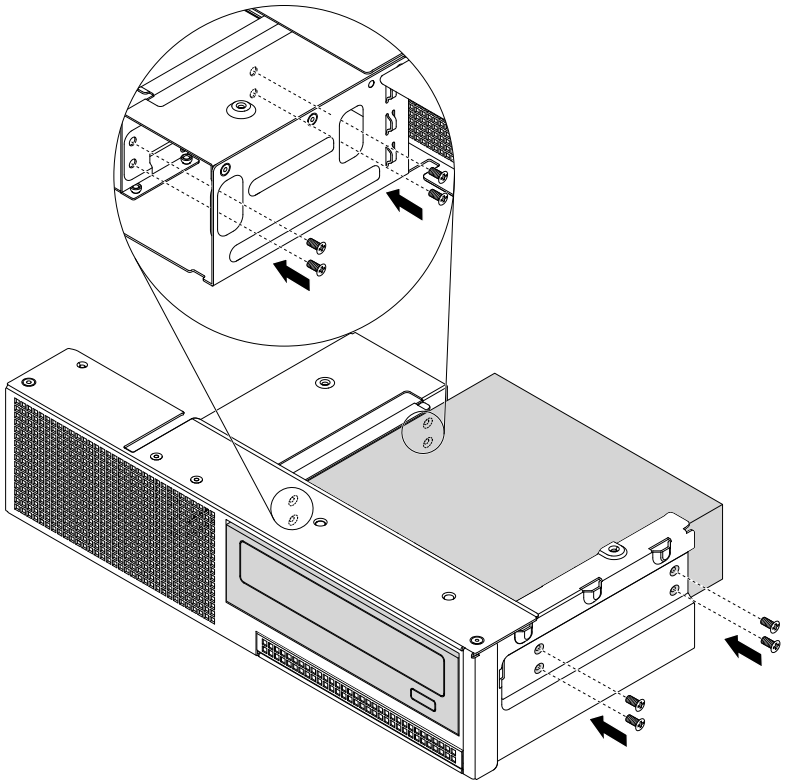

Figure 140. Installing the screws to secure the tape drive to the tape drive cage

8. Slide the tape drive cage with the tape drive into the chassis from the front of the server.

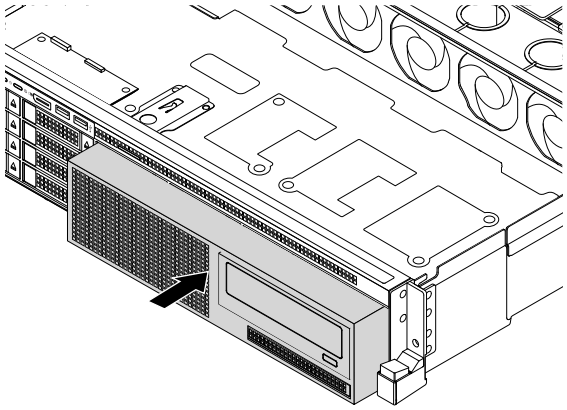

Figure 141. Installing the tape drive cage with the tape drive into the chassis

9. Install five screws to secure the tape drive cage to the chassis.

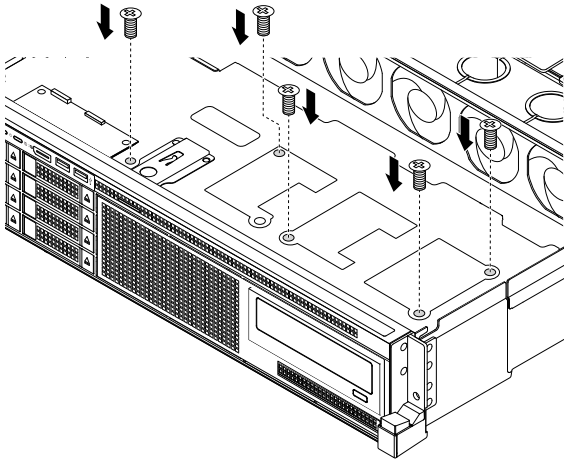

Figure 142. Installing five screws to secure the tape drive cage to the chassis

10. Do the following to connect the tape drive to your server:
    a. Connect the connector 1 on one end of the cable to the rear of the tape drive.

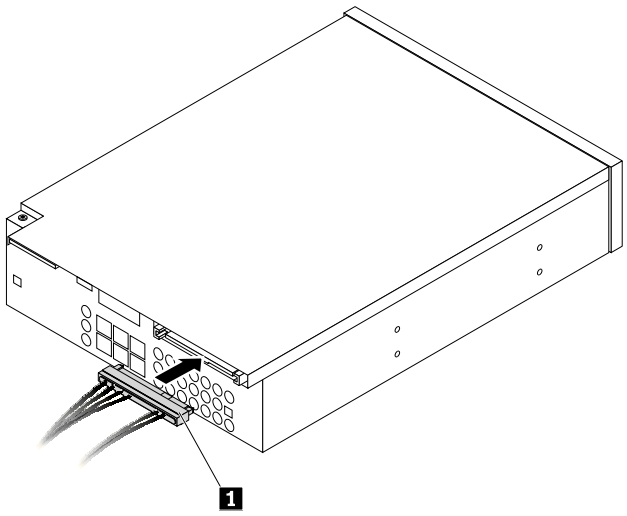

Figure 143. Connecting the connector 1 on one end of the cable to the rear of the tape drive

    b. Connect the 4-pin power connector on the other end of the cable to the 4-pin power connector on the backplane. See “Backplane for up to eight 2.5-inch drives” on page 37.
    c. Connect the SATA connector on the other end of the cable to the SATA connector on the ThinkServer RAID 720ix AnyRAID Adapter. See “AnyRAID adapter and RAID card” on page 28.
11. Save the removed metal shield in case that you later remove the drive and need the shield to cover the drive bay.

What to do next:

- To work with another piece of hardware, go to the appropriate section.
- To complete the installation, go to “Completing the parts replacement” on page 165.

Replacing the tape drive

Attention: Do not open your server or attempt any repair before reading and understanding “Safety information” on page iii and “Guidelines” on page 59.

Before you begin, print all the related instructions or ensure that you can view the PDF version on another computer for reference.

Notes:

- Depending on the model, your server might look slightly different from the illustrations in this topic.
- Use any documentation that comes with the tape drive and follow those instructions in addition to the instructions in this topic.

To replace the tape drive, do the following:

1. Remove all external media from the drives and turn off all attached devices and the server. Then, disconnect all power cords from electrical outlets and disconnect all cables that are connected to the server.
2. Prepare your server. See “Removing or extending the server from the rack cabinet” on page 61.

3. Remove the server cover. See “Removing the server cover” on page 61.
4. locate the failing tape drive and disconnect the cable from the rear of the tape drive. Remove any parts and disconnect any cables that might impede your access to the tape drive. See “Front view of the server” on page 16.
5. Remove the five screws that secure the tape drive cage to the chassis. Then, remove the tape drive cage from the front of the server.

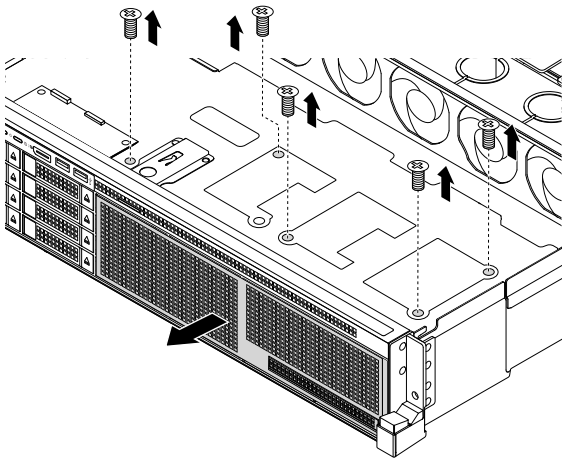

Figure 144. Removing the tape drive cage

6. Remove the eight screws that secure the tape drive to the tape drive cage. Then, remove the tape drive from the front of the tape drive cage.

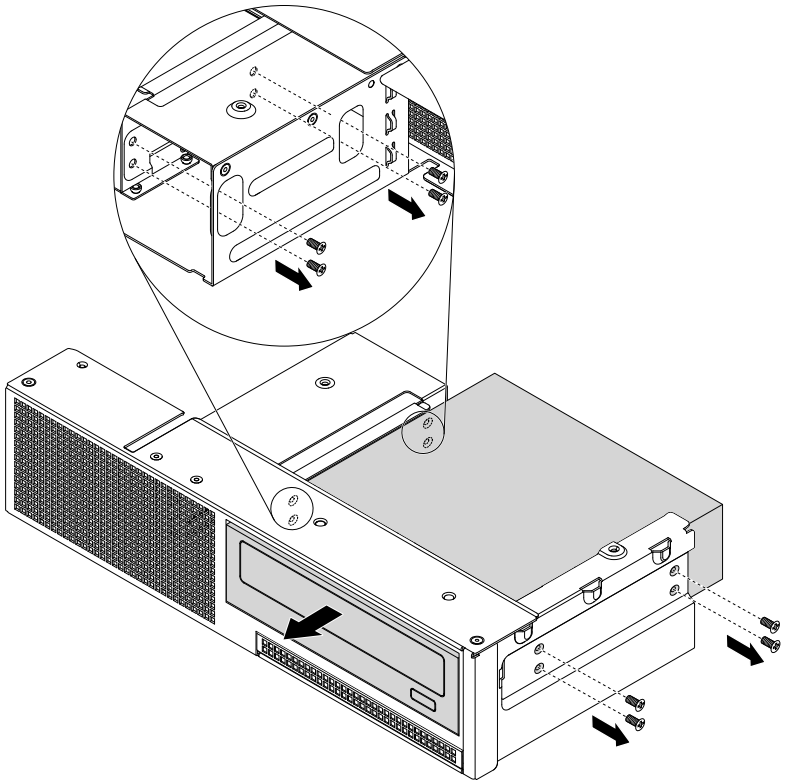

Figure 145. Removing the tape drive

7. Install the new tape drive. See “Installing the tape drive” on page 153.
8. If you are instructed to return the old tape drive, follow all packaging instructions and use any packaging materials that are supplied to you for shipping.

What to do next:

- To work with another piece of hardware, go to the appropriate section.
- To complete the replacement, go to “Completing the parts replacement” on page 165.

Replacing the coin-cell battery

Attention: Do not open your server or attempt any repair before reading and understanding “Safety information” on page iii and “Guidelines” on page 59.

Your server has a special type of memory that maintains the date, time, and configuration information for built-in features. The coin-cell battery keeps the information active when you turn off the server. The coin-cell battery normally requires no charging or maintenance throughout its life; however, no battery lasts forever. If the coin-cell battery fails, the date, time, and configuration information, including passwords, are lost and an error message is displayed when you turn on the server.

DANGER

Danger of explosion if battery is incorrectly replaced.

When replacing the lithium coin cell battery, use only the same or an equivalent type that is recommended by the manufacturer. The battery contains lithium and can explode if not properly used, handled, or disposed of.

Do not:

- **Throw or immerse into water**
- **Heat to more than 100°C (212°F)**
- **Repair or disassemble**

Dispose of the battery as required by local ordinances or regulations.

The following statement applies to users in the state of California, U.S.A.

California Perchlorate Information:

Products containing manganese dioxide lithium coin cell batteries may contain perchlorate.

Perchlorate Material - special handling may apply,
Seehttp://www.dtsc.ca.gov/hazardouswaste/perchlorate

Before you begin, print all the related instructions or ensure that you can view the PDF version on another computer for reference.

Note: After you replace the coin-cell battery, you must reset passwords, reset system date and time, and reconfigure the server.

To replace the coin-cell battery, do the following:

1. Remove all external media from the drives and turn off all attached devices and the server. Then, disconnect all power cords from electrical outlets and disconnect all cables that are connected to the server.
2. Prepare your server. See “Removing or extending the server from the rack cabinet” on page 61.
3. Remove the server cover. See “Removing the server cover” on page 61.
4. Locate the coin-cell battery. See “System board components” on page 38.

   Note: If there is any PCIe card installed on the riser card assembly 1, it might block your access to the coin-cell battery. In this case, lift the riser card assembly 1 so that you can access the coin-cell battery. Do not disconnect any cables from the riser card assembly 1 or completely remove the riser card assembly 1.

5. Remove the old coin-cell battery.

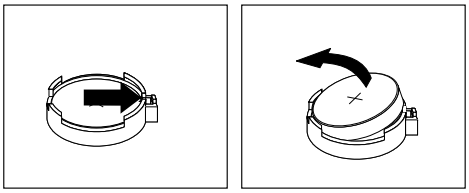

Figure 146. Removing the coin-cell battery

6. Install a new coin-cell battery.

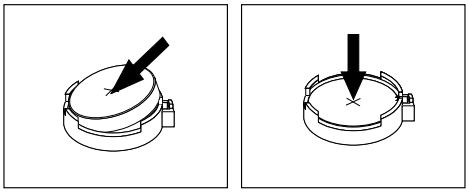

Figure 147. Installing the coin-cell battery

7. If you have lifted up the riser card assembly 1, reinstall it into the chassis. See “Replacing the riser card” on page 77.
8. Dispose of the old coin-cell battery as required by local ordinances or regulations.

What to do next:

- To work with another piece of hardware, go to the appropriate section.
- To complete the replacement, go to “Completing the parts replacement” on page 165. After you replace the coin-cell battery, you must reset passwords, reset system date and time, and reconfigure the server. See Chapter 5 “Configuring the server” on page 47.

For service technician only: replacing the system board

Attention: This procedure must be performed only by trained service personnel of Lenovo. Do not open your server or attempt any repair before reading and understanding “Safety information” on page iii and “Guidelines” on page 59.

CAUTION:
Hazardous moving parts. Keep fingers and other body parts away.

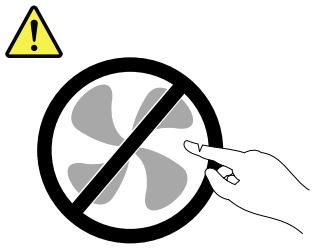

CAUTION:

The heat sinks and microprocessors might be very hot. Turn off the server and wait several minutes to let the server cool before removing the server cover.

Before you begin, print all the related instructions or ensure that you can view the PDF version on another computer for reference.

Note: Depending on the model, your server might look slightly different from the illustrations in this topic.

To replace the system board, do the following:

1. Remove all external media from the drives and turn off all attached devices and the server. Then, disconnect all power cords from electrical outlets and disconnect all cables that are connected to the server.
2. Prepare your server. See “Removing or extending the server from the rack cabinet” on page 61.
3. Remove the server cover. See “Removing the server cover” on page 61.
4. Remove the cooling shroud. See “Removing and reinstalling the cooling shroud” on page 64.
5. Remove the system fans. See “Installing or replacing a system fan” on page 66.
6. Remove the system fan cage. See “Removing and reinstalling the system fan cage” on page 68.
7. Record the component locations, cable connections, and cable routing in the server.
8. Remove the two riser card assemblies. See “Replacing the riser card” on page 77.
9. Remove the PCIe cards installed on the system board. See “Removing a PCIe card from the system board” on page 92.
10. Remove all memory modules. See “Removing a memory module” on page 76.
11. Remove the TSM premium module if one is installed. See “Removing the TSM premium module” on page 111.
12. Remove the TPM if one is installed. See “Removing the TPM” on page 113.
13. Remove the SD module if one is installed. See “Removing the SD module” on page 109.
14. Remove the coin-cell battery. See “Replacing the coin-cell battery” on page 158.
15. Remove the heat sinks. See “Installing or replacing a heat sink” on page 118.

16. Disconnect all cables from the system board.
17. Lift the release pin **2** to disengage the system board from the chassis. Then, use the lifting handle **1** and release pin **2** to move the system board to the front of the server and lift it out of the chassis.

    Note: Carefully handle the system board by the release pin **2** and the lifting handle **1**.

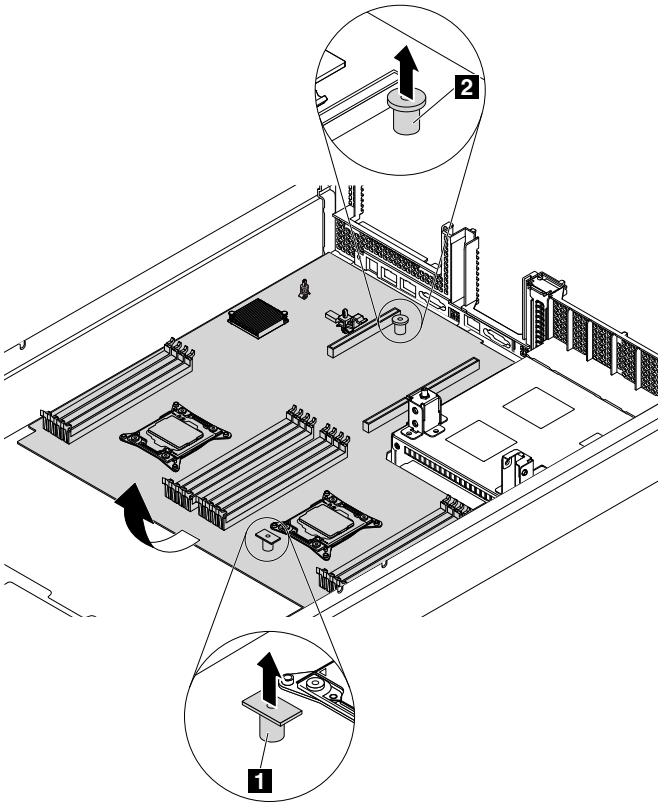

Figure 148. Removing the system board

18. Place the old system board on a flat, clean, and static-protective surface. Touch the static-protective package that contains the new system board to any unpainted surface on the outside of the server. Then, take the new system board out of the package.

19. Install the new system board into the chassis and press the system board to the rear of the server. Ensure that the rear connectors on the new system board are inserted into the corresponding holes in the rear panel.

    Note: Gently and carefully handle the new system board.

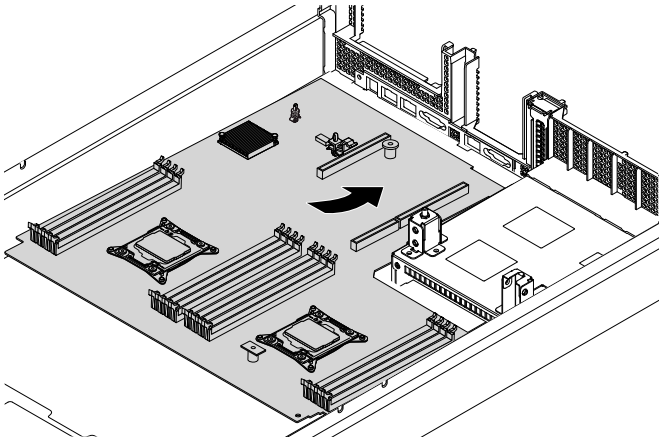

Figure 149. Installing the system board

20. Remove the microprocessors from the old system board and install them on the new system board. See "Installing or replacing the microprocessor" on page 120.

    Note: Do not drop anything onto the microprocessor socket on the old system board while it is exposed. The socket pins must be kept as clean as possible.

21. Use a cleaning pad to wipe the thermal grease from the heat sinks and the top of the microprocessors. Dispose of the cleaning pad after all of the thermal grease is removed.
22. Use one of the following methods to apply appropriate amount of thermal grease to the top of the microprocessors in the shape of a cross or a circle as shown. Using too much or too little thermal grease can cause a thermal problem due to imperfect contact with the components.

    Notes:

    - Do not touch the thermal grease.
    - Keep the thermal grease off the system board.

Figure 150. Applying the thermal grease to the top of the microprocessor

23. Install the heat sinks on the new system board. See "Installing or replacing a heat sink" on page 118.
24. Reinstall all parts that you have removed one by one in the reversed sequence as you remove them. Connect all cables to the new system board. Refer to the information that you have noted down and the related topics in "Installing, removing, or replacing hardware" on page 63.

25. If you are instructed to return the old system board, follow all packaging instructions and use any packaging materials that are supplied to you for shipping.

The old system board must be returned with two microprocessor socket covers to protect the pins on the microprocessor sockets during shipping and handling. Use the microprocessor socket covers removed from the new system board.

To install a microprocessor socket cover on the old system board, do the following:

1. Close the microprocessor retainer. Close the small handle **1** first and then close the small handle **2**. Ensure that the retainer is locked into position and the new microprocessor is securely seated in the socket.

   Note: There are two marks on the microprocessor retainer. Ensure that you close the small handle marked with first and then close the small handle marked with . Always follow the correct sequence when you close the small handles.

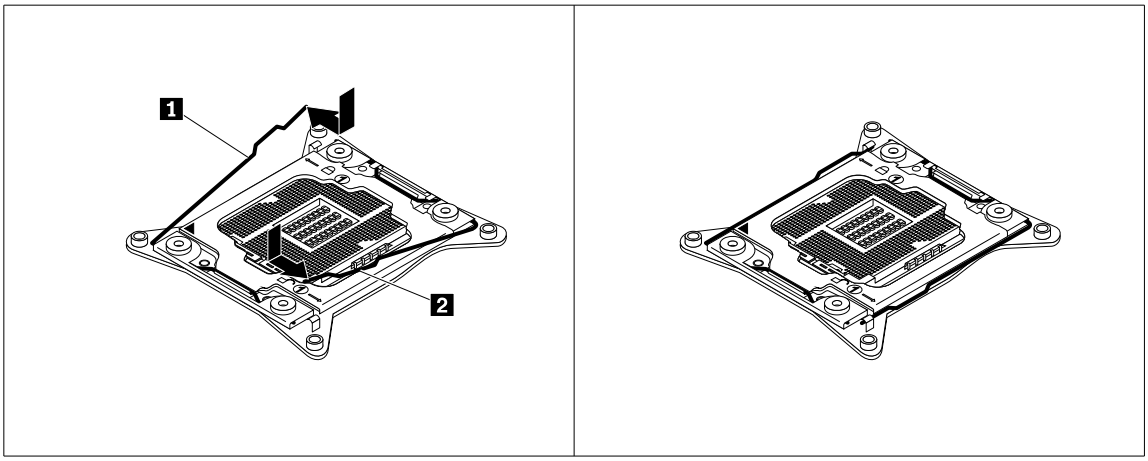

Figure 151. Securing the microprocessor retainer

2. Position the microprocessor socket cover above the microprocessor socket so that the small triangle **1** on the socket cover faces the small triangle **2** on the microprocessor retainer. Then, carefully press the socket cover straight down into the socket until it snaps into position.

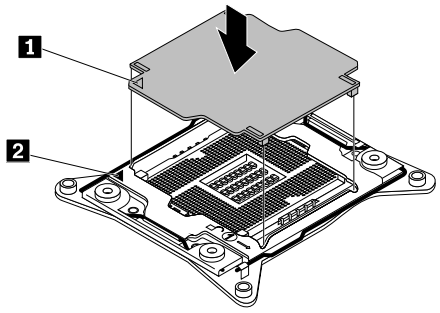

Figure 152. Installing the microprocessor socket cover

What to do next:

- To work with another piece of hardware, go to the appropriate section.

- To complete the replacement, go to “Completing the parts replacement” on page 165.

Completing the parts replacement

This topic provides instructions to help you complete the parts replacement and turn on your server.

To complete the parts replacement, you must properly route the cables inside the server, reinstall the server cover, reconnect all the external cables and, for some devices, update the firmware and run the Setup Utility program to do further setup.

Reinstalling the server cover and reconnecting cables

Attention: Do not open your server or attempt any repair before reading and understanding “Safety information” on page iii and “Guidelines” on page 59.

Attention: For proper cooling and airflow, reinstall the server cover before turning on the server. Operating the server with the server cover removed might damage server components.

Before you begin, print all the related instructions or ensure that you can view the PDF version on another computer for reference.

Note: Depending on the model, your server might look different from the illustrations in this topic.

To reinstall the server cover and reconnect cables to your server, do the following:

1. Ensure that all components have been reassembled correctly and that no tools or loose screws are left inside your server.

2. Ensure that all internal cables are connected and routed correctly and secured by any cable clips or ties in the server. Keep cables clear of the hinges and sides of the chassis to avoid interference with reinstalling the cooling shroud and the server cover. The following illustration shows an example of the cable routing in the chassis for server models with an optical drive and an internal tape drive installed.
   - Properly route the power cable **1** for the backplane through the right inner side of the chassis.
   - Properly route the cable **2** that is connected from the optical drive to the front backplane.
   - Properly route the cable **3** that is connected from the internal tape drive to the front backplane and the AnyRAID adapter.
   - Route the signal cables **4** through the left inner side of the chassis. The signal cables include the following:
     - SATA signal cable from the optical drive to the corresponding SATA connector on the system board
     - Cables from the front panel board to the front panel connectors on the system board
     - Cable from the AnyRAID adapter to the AnyRAID connector on the system board

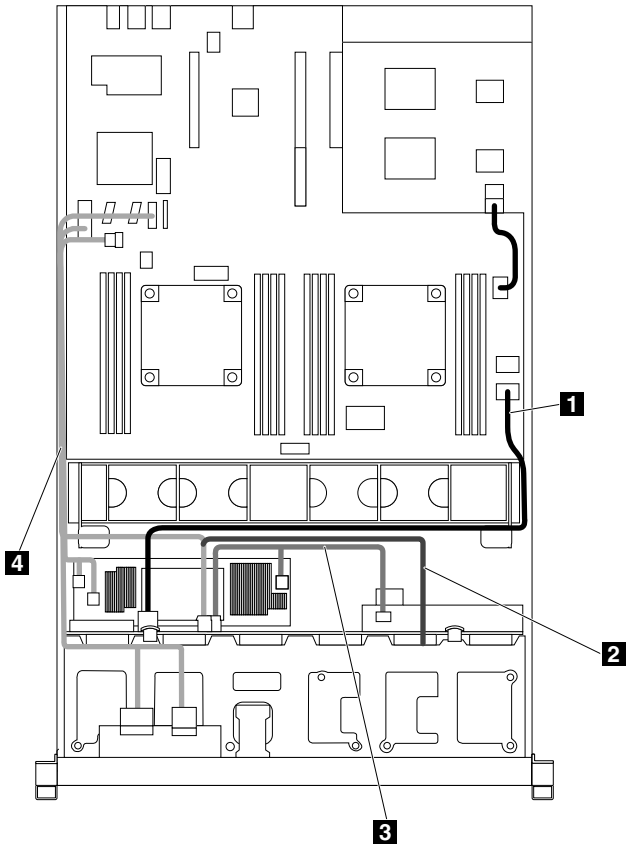

Figure 153. Cable routing

3. If you have removed the cooling shroud, reinstall it. See “Removing and reinstalling the cooling shroud” on page 64.

4. Ensure that the cover latch is in the open position. Lower the server cover onto the chassis until both sides of the server cover engage the guides on both sides of the chassis. Then, pivot the cover latch and slide the cover to the front of the chassis at the same time until the server cover snaps into position. Ensure that the cover latch is completely closed.

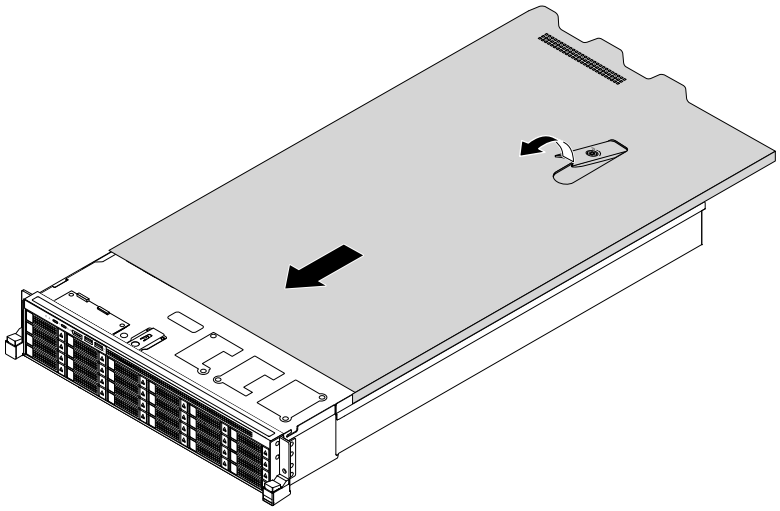

Figure 154. Installing the server cover

5. Use a screwdriver to turn the cover lock to the closed position.

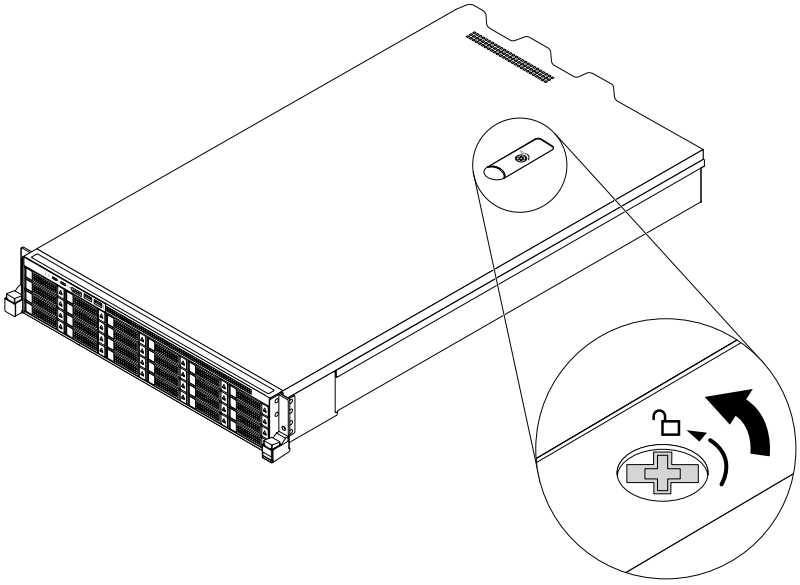

Figure 155. Closing the server cover completely

6. Reconnect external cables and power cords to the server. See “Rear view of the server” on page 23 to identify the connectors on the rear panel of the server.

   Attention: To avoid component damage, connect the power cords last.

Note: In most areas of the world, Lenovo requires the return of the defective CRU. Information about this will come with the CRU or will come a few days after the CRU arrives.

Updating the server configuration

When you turn on the server for the first time after you install, remove, or replace a device, update the server configuration if necessary.

Some optional devices have device drivers that you must install. For information about installing device drivers, use the documentation that comes with each optional device. To obtain the supported device drivers for your server from the Lenovo Support Web site, go to http://www.lenovo.com/drivers and follow the instructions on the Web page to find and download the device drivers you need.

Refer to the following information resources to update the server configuration:

- To update the BIOS configuration, see “Using the Setup Utility program” on page 47.
- To update the RAID configuration, see “Configuring RAID” on page 54.
- To update your system firmware, see “Updating the firmware” on page 57.
- To use the Lenovo ThinkServer Deployment Manager program, see “Lenovo ThinkServer Deployment Manager” on page 13.

Chapter 7. Troubleshooting and diagnostics

This chapter provides information about basic troubleshooting and diagnostic methods to help you solve problems that might occur in the server.

If you cannot diagnose and correct a problem by using the information in this chapter, see Chapter 8 “Getting information, help, and service” on page 175 for additional troubleshooting resources.

Troubleshooting procedure

Use the following information as a general procedure for diagnosing and troubleshooting problems you experience with your server:

1. Verify that the power cords and the cables for all attached devices are connected correctly and securely.
2. Verify that the server and all attached devices that require ac power are connected to properly grounded, functioning electrical outlets.
3. Verify that all installed hardware and attached devices are enabled in the BIOS settings of your server. For more information about accessing and changing the BIOS settings, see “Using the Setup Utility program” on page 47.
4. View the status and diagnostic LEDs to identify the system and device status and diagnose problems. See “Viewing the status and diagnostic LEDs” on page 169.
5. If the server is not working after you have added new software, installed a new optional device, or replaced a piece of hardware, remove or reinstall the software, device, or hardware to see if the problem could be solved.
6. View the system event log to diagnose problems. See “Viewing the system event log” on page 170.
7. Turn on the server and press Esc as soon as you see the logo screen to view any diagnostic messages.
8. Download and use a diagnostic program to diagnose problems. See “Lenovo ThinkServer Diagnostics” on page 14.
9. Refer to “Basic troubleshooting tables” on page 170 and follow the instructions for the type of problem you are experiencing. If the basic troubleshooting information does not help you resolve a problem, continue with the next step.
10. Try using a previous server configuration to see if a recent change to hardware or software settings has caused a problem. Before restoring your previous configuration, capture your current configuration in case the older configuration settings do not solve the problem or have adverse effect.
11. Use an antivirus program to see if your server has been infected by a virus. If the program detects a virus, remove the virus.
12. If none of these actions solve the problem, seek technical assistance. See Chapter 8 “Getting information, help, and service” on page 175.

Viewing the status and diagnostic LEDs

Your server has status and diagnostic LEDs on the front panel, the rear panel, the hot-swap storage drives, and the optical drive (if supported). The various LEDs help you easily identify the system and device status and diagnose problems. For information about the LEDs, refer to the related topics in “Locations” on page 15.

© Copyright Lenovo 2014

Viewing the system event log

The system event log (SEL) contains information about all the POST and system management interrupt (SMI) events. You can view the SEL to diagnose system problems.

The TSM implements the SEL as specified in the IPMI 2.0 specification. The SEL is accessible regardless of the system power state through the TSM in-band and out-of-band interfaces.

For more information about viewing the SEL, refer to the *ThinkServer System Manager User Guide*, which is available for download at:
http://www.lenovo.com/UserManuals

Basic troubleshooting tables

Use the basic troubleshooting information to find solutions to problems that have definite symptoms.

Lenovo ThinkServer Deployment Manager program problems

Follow the suggested actions for the corresponding symptom in the order in which they are listed until the problem is solved. If none of these actions solve the problem, see “Troubleshooting procedure” on page 169 for the subsequent steps you should check after using the information in this topic. If the problem still cannot be solved, seek technical assistance. See Chapter 8 “Getting information, help, and service” on page 175.

Note: If you are instructed to remove, install, or replace any CRUs, refer to the related procedure in Chapter 6 “Replacing hardware” on page 59.

Symptom	Action
The operating system installation program continuously loops.	Make more space available on the hard disk drive.
The Lenovo ThinkServer Deployment Manager program cannot start the operating system medium.	Ensure that the operating system medium is supported by the Lenovo ThinkServer Deployment Manager program version your are using. For a list of the supported operating systems, refer to the user guide and compatibility notes for the Lenovo ThinkServer Deployment Manager program through the program main interface. See “Lenovo ThinkServer Deployment Manager” on page 13.

Optical drive problems

Follow the suggested actions for the corresponding symptom in the order in which they are listed until the problem is solved. If none of these actions solve the problem, see “Troubleshooting procedure” on page 169 for the subsequent steps you should check after using the information in this topic. If the problem still cannot be solved, seek technical assistance. See Chapter 8 “Getting information, help, and service” on page 175.

Notes:

- If you are instructed to remove, install, or replace any CRUs, refer to the related procedure in Chapter 6 “Replacing hardware” on page 59.
- If an action step is preceded by “(Trained service technician only),” this action step is reserved for a trained service technician and must be performed only by a trained service technician.

Symptom	Action
The optical drive is not recognized.	1. Ensure that: • The related cables and connectors are not damaged and the connector pins are not bent. • The optical drive is securely connected to the correct SATA connector on the system board and the SATA connector is enabled in the Setup Utility program. See “Using the Setup Utility program” on page 47. • All cables and jumpers (if any) are installed correctly. • The correct device driver is installed for the optical drive. 2. Run any optical drive diagnostic programs if you have. 3. Reinstall the optical drive and reconnect cables. 4. Replace the signal cable for the optical drive. 5. Replace the power cable for the optical drive. 6. Replace the power cable for the backplane. 7. Replace the optical drive. 8. Replace the backplane. 9. (Trained service technician only) Replace the system board.
A disc is not working correctly.	1. Ensure that the disc is in the optical drive with the shiny side facing down. 2. Ensure that the disc surface is clean and not scratched. 3. Check the disc or package for regional coding. If necessary, purchase a disc with coding for the region where you are using the product. 4. Restart the disc player program. 5. Restart the server. 6. Run any optical drive diagnostic programs if you have. 7. Reinstall the optical drive and reconnect cables. 8. Replace the signal cable for the optical drive. 9. Replace the optical drive.

Storage drive problems

Follow the suggested actions for the corresponding symptom in the order in which they are listed until the problem is solved. If none of these actions solve the problem, see “Troubleshooting procedure” on page 169 for the subsequent steps you should check after using the information in this topic. If the problem still cannot be solved, seek technical assistance. See Chapter 8 “Getting information, help, and service” on page 175.

Notes:

- If you are instructed to remove, install, or replace any CRUs, refer to the related procedure in Chapter 6 “Replacing hardware” on page 59.

- The status LEDs on each hot-swap storage drive help you easily identify a problem. See “Hot-swap-drive status LEDs” on page 43.

Symptom	Action
A newly installed hot-swap storage drive is not recognized.	1. Ensure that the drive is installed into the correct drive bay. 2. Restart the server. 3. Remove the drive from the bay, wait 45 seconds, and reinsert the drive into the bay, making sure that the drive connects to the hot-swap-drive backplane. 4. Run any diagnostic programs to test the drive if you have. 5. Ensure that the hot-swap-drive backplane is correctly seated. When it is correctly seated, the drive assemblies correctly connect to the backplane without bowing or causing movement of the backplane. 6. Ensure that the cable connection is correct. See “Connecting cables” on page 44. 7. Reconnect the backplane power cable and repeat step 1 through step 4. 8. Reconnect the backplane signal cable and repeat step 1 through step 4. 9. If you suspect a problem with the backplane signal cable or the backplane: a. Replace the affected backplane signal cable. b. Replace the affected backplane.
Multiple storage drives fail.	1. Ensure that the cable connection is correct. See “Connecting cables” on page 44. 2. Reconnect the power cable(s). 3. Reconnect the signal cable(s). 4. Replace the affected signal cable(s). 5. If you suspect a problem with the backplane, replace the affected backplane.

Memory module problems

Follow the suggested actions for the corresponding symptom in the order in which they are listed until the problem is solved. If none of these actions solve the problem, see “Troubleshooting procedure” on page 169 for the subsequent steps you should check after using the information in this topic. If the problem still cannot be solved, seek technical assistance. See Chapter 8 “Getting information, help, and service” on page 175.

Notes:

- If you are instructed to remove, install, or replace any CRUs, refer to the related procedure in Chapter 6 “Replacing hardware” on page 59.
- If an action step is preceded by “(Trained service technician only),” this action step is reserved for a trained service technician and must be performed only by a trained service technician.

Symptom	Action
The amount of system memory that is displayed is less than the total capacity of the installed physical memory modules and you suspect a memory module problem.	1. Ensure that: • All memory modules are the correct type supported by the server. See “Memory module installation rules” on page 70. • You followed the memory module installation rules. See “Memory module installation rules” on page 70. • All memory modules are seated correctly and securely. • The system firmware is up-to-date. 2. Reinstall the memory modules. 3. Replace the suspect memory modules. 4. (Trained service technician only) Replace the system board.

Keyboard, mouse, and USB device problems

Follow the suggested actions for the corresponding symptom in the order in which they are listed until the problem is solved. If none of these actions solve the problem, see “Troubleshooting procedure” on page 169 for the subsequent steps you should check after using the information in this topic.

Symptom	Action
All or some keys on the keyboard do not work.	1. Ensure that: • The USB keyboard cable is securely connected to a USB connector on the server. If the USB keyboard is connected to a USB hub, disconnect the keyboard from the hub and connect it directly to the server. • No keys are stuck. • The USB controller is enabled in the Setup Utility program. See “Using the Setup Utility program” on page 47. 2. Restart the server. 3. Replace the keyboard.
The mouse or pointing device does not work.	1. Ensure that: • The mouse or pointing device cable is securely connected to the server. If the USB mouse or pointing device is connected to a USB hub, disconnect the mouse or pointing device from the hub and connect it directly to the server. • The mouse or pointing device is clean and no dust accumulates. • The device drivers are installed correctly. • The USB controller is enabled in the Setup Utility program. See “Using the Setup Utility program” on page 47. 2. Restart the server.

Symptom	Action
	3. Replace the mouse or pointing device.
A USB device does not work.	1. Ensure that: • The USB cable is securely connected to the server. If the USB device is connected to a USB hub, disconnect the device from the hub and connect it directly to the server. • The device drivers are installed correctly. • The USB controller is enabled in the Setup Utility program. See “Using the Setup Utility program” on page 47. 2. Restart the server. 3. Replace the USB device.

Chapter 8. Getting information, help, and service

This chapter contains information about help, service, and technical assistance for products manufactured by Lenovo and where to go for additional information about Lenovo and Lenovo products.

Information resources

You can use the information in this topic to access useful resources relating to your needs when using the product.

Using the documentation

Information about your Lenovo system and installed software, if any, or optional devices is available in the documentation that comes with the product. The documentation can include printed documents, online documents, readme files, and help files. Most of the documentation for your server is on the documentation DVD provided with your server. Refer to the troubleshooting information for instructions on how to diagnose problems and do basic troubleshooting. The troubleshooting and diagnostics information might tell you that you need additional or updated device drivers or other software. Lenovo maintains pages on the World Wide Web where you can get the latest technical information and download documentation or device drivers and updates. To access the Lenovo Support Web site, go to:
http://www.lenovo.com/support

For more information about your server documentation, see “Server documentation” on page 2.

If you suspect a software problem, refer to the documentation, including readme files and online help, that comes with the operating system or software program.

ThinkServer Web site

The ThinkServer Web site provides up-to-date information and services to help you buy, use, upgrade, and maintain your server. You also can do the following by visiting the ThinkServer Web site at:
http://www.lenovo.com/thinkserver

- Shop for servers as well as upgrades and accessories for your server.
- Purchase additional services and software.
- Purchase upgrades and extended hardware repair services.
- Access the Lenovo Limited Warranty (LLW).
- Access the online manuals for your products.
- Access troubleshooting and support information for your server model and other supported products.
- Download the latest device drivers and software updates for your server model.
- Find the service and support phone numbers for your country or region.
- Find a Service Provider located near you.

Lenovo Support Web site

Technical support information is available on the Lenovo Support Web site at:
http://www.lenovo.com/support

This Web site is updated with the latest support information such as the following:

- Drivers and software

© Copyright Lenovo 2014

- Diagnostic solutions
- Product and service warranty
- Product and parts details
- User guides and manuals
- Knowledge base and frequently asked questions

Help and service

This topic contains information about obtaining help and service.

Before you call

Before you call, do the following to try to solve the problem by yourself:

- Check all cables to ensure that they are connected.
- Check the power switches to ensure that the system and optional devices are turned on.
- Use the troubleshooting information in your system documentation on the documentation DVD that comes with your product.
- Check for the updated information, new device drivers, and hints and tips on the Lenovo Support Web site at:
  http://www.lenovo.com/support
- Download the diagnostic program from the Lenovo Web site, and then run it. See “Lenovo ThinkServer Diagnostics” on page 14.

If possible, be at your product when you call. Have the following information available:

- Machine type and model
- Serial numbers of your Lenovo hardware products
- Description of the problem
- Exact wording of any error messages
- Hardware and software configuration information
- Data collected by the diagnostic program

Calling for service

During the warranty period, you can get help and information by telephone through the Customer Support Center.

The following services are available during the warranty period:

- **Problem determination** - Trained service personnel are available to assist you with determining a hardware problem and deciding what action is necessary to fix the problem.
- **Hardware repair** - If the problem is caused by hardware under warranty, trained service personnel are available to provide the applicable level of service.
- **Engineering Change management** - There might be changes that are required after a product has been sold. Lenovo or your reseller will make selected Engineering Changes (ECs) that apply to your hardware available.

The warranty does not cover the following:
- Replacement or use of parts not manufactured for or by Lenovo or non-warranted Lenovo parts
- Identification of software problem sources
- Configuration of the Unified Extensible Firmware Interface (UEFI) BIOS as part of an installation or upgrade
- Changes, modifications, or upgrades to device drivers
- Installation and maintenance of network operating systems (NOS)
- Installation and maintenance of application programs

For the warranty type and duration for your product, refer to the *Safety, Warranty, and Support Information* on the documentation DVD that comes with your server. You must retain your proof of purchase to obtain warranty service.

For warranty service, consult the worldwide Lenovo Support telephone list. Telephone numbers are subject to change without notice. The most up-to-date telephone list for Lenovo Support is always available on the Web site at http://www.lenovo.com/support/phone. If the telephone number for your country or region is not listed, contact your Lenovo reseller or Lenovo marketing representative.

Using other services

If you travel with a Lenovo notebook computer or relocate your server to a country where your desktop, notebook, or server machine type is sold, your server might be eligible for International Warranty Service, which automatically entitles you to obtain warranty service throughout the warranty period. Service will be performed by service providers authorized to perform warranty service.

Service methods and procedures vary by country, and some services might not be available in all countries. International Warranty Service is delivered through the method of service (such as depot, carry-in, or on-site service) that is provided in the servicing country. Service centers in certain countries might not be able to service all models of a particular machine type. In some countries, fees and restrictions might apply at the time of service.

To determine whether your server is eligible for International Warranty Service and to view a list of the countries where service is available, go to http://www.lenovo.com/support, click **Warranty**, and follow the instructions on the screen.

For technical assistance with the installation of or questions related to Service Packs for your installed Windows product, refer to the Microsoft Product Support Services Web site at http://support.microsoft.com/directory or you can contact the Customer Support Center. Some fees might apply.

Purchasing additional services

During and after the warranty period, you can purchase additional services, such as support for hardware, operating systems, and application programs; network setup and configuration services; upgraded or extended hardware repair services; and custom installation services. Service availability and service names might vary by country or region. For more information about these services, go to the Lenovo Web site at: http://www.lenovo.com

Appendix A. Notices

Lenovo may not offer the products, services, or features discussed in this document in all countries. Consult your local Lenovo representative for information on the products and services currently available in your area. Any reference to a Lenovo product, program, or service is not intended to state or imply that only that Lenovo product, program, or service may be used. Any functionally equivalent product, program, or service that does not infringe any Lenovo intellectual property right may be used instead. However, it is the user's responsibility to evaluate and verify the operation of any other product, program, or service.

Lenovo may have patents or pending patent applications covering subject matter described in this document. The furnishing of this document does not give you any license to these patents. You can send license inquiries, in writing, to:

Lenovo (United States), Inc.
1009 Think Place - Building One
Morrisville, NC 27560
U.S.A.
Attention: Lenovo Director of Licensing

LENOVO PROVIDES THIS PUBLICATION “AS IS” WITHOUT WARRANTY OF ANY KIND, EITHER EXPRESS OR IMPLIED, INCLUDING, BUT NOT LIMITED TO, THE IMPLIED WARRANTIES OF NON-INFRINGEMENT, MERCHANTABILITY OR FITNESS FOR A PARTICULAR PURPOSE. Some jurisdictions do not allow disclaimer of express or implied warranties in certain transactions, therefore, this statement may not apply to you.

This information could include technical inaccuracies or typographical errors. Changes are periodically made to the information herein; these changes will be incorporated in new editions of the publication. Lenovo may make improvements and/or changes in the product(s) and/or the program(s) described in this publication at any time without notice.

The products described in this document are not intended for use in implantation or other life support applications where malfunction may result in injury or death to persons. The information contained in this document does not affect or change Lenovo product specifications or warranties. Nothing in this document shall operate as an express or implied license or indemnity under the intellectual property rights of Lenovo or third parties. All information contained in this document was obtained in specific environments and is presented as an illustration. The result obtained in other operating environments may vary.

Lenovo may use or distribute any of the information you supply in any way it believes appropriate without incurring any obligation to you.

Any references in this publication to non-Lenovo Web sites are provided for convenience only and do not in any manner serve as an endorsement of those Web sites. The materials at those Web sites are not part of the materials for this Lenovo product, and use of those Web sites is at your own risk.

Any performance data contained herein was determined in a controlled environment. Therefore, the result obtained in other operating environments may vary significantly. Some measurements may have been made on development-level systems and there is no guarantee that these measurements will be the same on generally available systems. Furthermore, some measurements may have been estimated through extrapolation. Actual results may vary. Users of this document should verify the applicable data for their specific environment.

© Copyright Lenovo 2014

Trademarks

Lenovo, the Lenovo logo, ThinkServer, and the ThinkServer logo are trademarks of Lenovo in the United States, other countries, or both.

Intel and Intel Xeon are trademarks of Intel Corporation in the United States, other countries, or both.

Internet Explorer, Microsoft, and Windows are trademarks of the Microsoft group of companies.

Linux is a registered trademark of Linus Torvalds.

DisplayPort is a trademark of the Video Electronics Standards Association.

Other company, product, or service names may be trademarks or service marks of others.

Important notes

Processor speed indicates the internal clock speed of the microprocessor; other factors also affect application performance.

CD or DVD drive speed is the variable read rate. Actual speeds vary and are often less than the possible maximum.

When referring to processor storage, real and virtual storage, or channel volume, KB stands for 1 024 bytes, MB stands for 1 048 576 bytes, and GB stands for 1 073 741 824 bytes.

When referring to storage drive capacity or communications volume, MB stands for 1 000 000 bytes, and GB stands for 1 000 000 000 bytes. Total user-accessible capacity can vary depending on operating environments.

Maximum internal storage drive capacities assume the replacement of any standard storage drives and population of all drive bays with the largest currently supported drives that are available from Lenovo.

Maximum memory might require replacement of the standard memory with an optional memory module.

Lenovo makes no representations or warranties with respect to non-Lenovo products. Support (if any) for the non-Lenovo products is provided by the third party, not Lenovo.

Some software might differ from its retail version (if available) and might not include user manuals or all program functionality.

Polyvinyl Chloride (PVC) cable and cord notice

WARNING: Handling the cord on this product or cords associated with accessories sold with this product will expose you to lead, a chemical known to the State of California to cause cancer, and birth defects or other reproductive harm. ***Wash hands after handling***.

Recycling information

Lenovo encourages owners of information technology (IT) equipment to responsibly recycle their equipment when it is no longer needed. Lenovo offers a variety of programs and services to assist equipment owners in recycling their IT products. For information on recycling Lenovo products, go to:
http://www.lenovo.com/recycling

Battery return program

This product may contain a lithium or lithium ion battery. Consult your user manual or service manual for specific battery information. The battery must be recycled or disposed of properly. Recycling facilities may not be available in your area. For information on disposal or batteries outside the United States, go to http://www.lenovo.com/recycling or contact your local waste disposal facility.

Battery recycling information for the United States and Canada

US & Canada Only

Battery recycling information for the European Union

EU

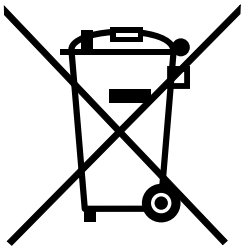

Notice: This mark applies only to countries within the European Union (EU).

Batteries or packaging for batteries are labeled in accordance with European Directive 2006/66/EC concerning batteries and accumulators and waste batteries and accumulators. The Directive determines the framework for the return and recycling of used batteries and accumulators as applicable throughout the European Union. This label is applied to various batteries to indicate that the battery is not to be thrown away, but rather reclaimed upon end of life per this Directive.

In accordance with the European Directive 2006/66/EC, batteries and accumulators are labeled to indicate that they are to be collected separately and recycled at end of life. The label on the battery may also include a chemical symbol for the metal concerned in the battery (Pb for lead, Hg for mercury, and Cd for cadmium). Users of batteries and accumulators must not dispose of batteries and accumulators as unsorted municipal waste, but use the collection framework available to customers for the return, recycling, and treatment of batteries and accumulators. Customer participation is important to minimize any potential effects of batteries and accumulators on the environment and human health due to the potential presence of hazardous substances. For proper collection and treatment, go to:
http://www.lenovo.com/recycling

Requirement for batteries containing perchlorate

The following statement applies to users in the state of California, U.S.A.

California Perchlorate Information:

Products containing manganese dioxide lithium coin cell batteries may contain perchlorate.

Perchlorate Material - special handling may apply, See
www.dtsc.ca.gov/hazardouswaste/perchlorate

Recycling information for Brazil

Declarações de Reciclagem no Brasil

Descarte de um Produto Lenovo Fora de Uso

Equipamentos elétricos e eletrônicos não devem ser descartados em lixo comum, mas enviados à pontos de coleta, autorizados pelo fabricante do produto para que sejam encaminhados e processados por empresas especializadas no manuseio de resíduos industriais, devidamente certificadas pelos orgãos ambientais, de acordo com a legislação local.

A Lenovo possui um canal específico para auxiliá-lo no descarte desses produtos. Caso você possua um produto Lenovo em situação de descarte, ligue para o nosso SAC ou encaminhe um e-mail para: reciclar@lenovo.com, informando o modelo, número de série e cidade, a fim de enviarmos as instruções para o correto descarte do seu produto Lenovo.

Particulate contamination

Attention: Airborne particulates (including metal flakes or particles) and reactive gases acting alone or in combination with other environmental factors such as humidity or temperature might pose a risk to the server that is described in this document. Risks that are posed by the presence of excessive particulate levels or concentrations of harmful gases include damage that might cause the server to malfunction or cease functioning altogether. This specification sets forth limits for particulates and gases that are intended to avoid such damage. The limits must not be viewed or used as definitive limits, because numerous other factors, such as temperature or moisture content of the air, can influence the impact of particulates or environmental corrosives and gaseous contaminant transfer. In the absence of specific limits that are set forth in this document, you must implement practices that maintain particulate and gas levels that are consistent with the protection of human health and safety. If Lenovo determines that the levels of particulates or gases in your environment have caused damage to the server, Lenovo may condition provision of repair or replacement of servers or parts on implementation of appropriate remedial measures to mitigate such environmental contamination. Implementation of such remedial measures is a customer responsibility.

Table 11. Limits for particulates and gases

Contaminant	Limits
Particulate	• The room air must be continuously filtered with 40% atmospheric dust spot efficiency (MERV 9) according to ASHRAE Standard 52.2[1]. • Air that enters a data center must be filtered to 99.97% efficiency or greater, using high-efficiency particulate air (HEPA) filters that meet MIL-STD-282. • The deliquescent relative humidity of the particulate contamination must be more than 60%[2]. • The room must be free of conductive contamination such as zinc whiskers.
Gaseous	• Copper: Class G1 as per ANSI/ISA 71.04-1985[3] • Silver: Corrosion rate of less than 300 Å in 30 days

[1] ASHRAE 52.2-2008 - *Method of Testing General Ventilation Air-Cleaning Devices for Removal Efficiency by Particle Size*. Atlanta: American Society of Heating, Refrigerating and Air-Conditioning Engineers, Inc.

[2] The deliquescent relative humidity of particulate contamination is the relative humidity at which the dust absorbs enough water to become wet and promote ionic conduction.

[3] ANSI/ISA-71.04-1985. *Environmental conditions for process measurement and control systems: Airborne contaminants*. Instrument Society of America, Research Triangle Park, North Carolina, U.S.A.

Important WEEE information

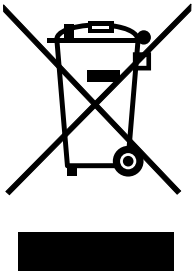

The WEEE marking on Lenovo products applies to countries with WEEE and e-waste regulations (for example, the European WEEE Directive, India E-Waste Management & Handling Rules, 2011). Appliances are labeled in accordance with local regulations concerning waste electrical and electronic equipment (WEEE). These regulations determine the framework for the return and recycling of used appliances as applicable within each geography. This label is applied to various products to indicate that the product is not to be thrown away, but rather put in the established collection systems for reclaiming these end of life products.

Users of electrical and electronic equipment (EEE) with the WEEE marking must not dispose of end of life EEE as unsorted municipal waste, but use the collection framework available to them for the return, recycle, and recovery of WEEE and to minimize any potential effects of EEE on the environment and human health due to the presence of hazardous substances. For additional WEEE information, go to: http://www.lenovo.com/recycling

Restriction of Hazardous Substances Directive (RoHS)

This topic provides statements about the Restriction of Hazardous Substances Directive (RoHS).

European Union RoHS

Lenovo products sold in the European Union, on or after 3 January 2013 meet the requirements of Directive 2011/65/EU on the restriction of the use of certain hazardous substances in electrical and electronic equipment (“RoHS recast” or “RoHS 2”).

For more information about Lenovo progress on RoHS, go to:
http://www.lenovo.com/social_responsibility/us/en/RoHS_Communication.pdf

German Ordinance for Work gloss statement

The product is not suitable for use with visual display work place devices according to clause 2 of the German Ordinance for Work with Visual Display Units.

Das Produkt ist nicht für den Einsatz an Bildschirmarbeitsplätzen im Sinne § 2 der Bildschirmarbeitsverordnung geeignet.

Export classification notice

This product is subject to the United States Export Administration Regulations (EAR) and has an Export Classification Control Number (ECCN) of 4A994.b. It can be re-exported except to any of the embargoed countries in the EAR E1 country list.

Electronic emission notices

The following information refers to the Lenovo ThinkServer machine types 70DA, 70DB, 70DC, 70DD, 70DE, 70DF, 70DV, and 70DW.

Federal Communications Commission (FCC) Statement

This equipment has been tested and found to comply with the limits for a Class A digital device, pursuant to Part 15 of the FCC Rules. These limits are designed to provide reasonable protection against harmful interference when the equipment is operated in a commercial environment. This equipment generates, uses, and can radiate radio frequency energy and, if not installed and used in accordance with the instruction manual, may cause harmful interference to radio communications. Operation of this equipment in a residential area is likely to cause harmful interference in which case the user will be required to correct the interference at his own expense.

Properly shielded and grounded cables and connectors must be used in order to meet FCC emission limits. Lenovo is not responsible for any radio or television interference caused by using other than specified or recommended cables and connectors or by unauthorized changes or modifications to this equipment. Unauthorized changes or modifications could void the user's authority to operate the equipment.

This device complies with Part 15 of the FCC Rules. Operation is subject to the following two conditions: (1) this device may not cause harmful interference, and (2) this device must accept any interference received, including interference that may cause undesired operation.

Industry Canada Compliance Statement

CAN ICES-3(A)/NMB-3(A)

United Kingdom telecommunications safety requirement

Notice to Customers

This apparatus is approved under approval number NS/G/1234/J/100003 for indirect connection to public telecommunication systems in the United Kingdom.

European Union - Compliance to the Electromagnetic Compatibility Directive

This product is in conformity with the protection requirements of EU Council Directive 2004/108/EC on the approximation of the laws of the Member States relating to electromagnetic compatibility. Lenovo cannot accept responsibility for any failure to satisfy the protection requirements resulting from a non-recommended modification of the product, including the installation of option cards from other manufacturers.

This product has been tested and found to comply with the limits for Class A Information Technology Equipment according to European Standard EN 55022. The limits for Class A equipment were derived for commercial and industrial environments to provide reasonable protection against interference with licensed communication equipment.

Lenovo, Einsteinova 21, 851 01 Bratislava, Slovakia

CE

Warning: This is a Class A product. In a domestic environment this product may cause radio interference in which case the user may be required to take adequate measures.

German Class A compliance statement

Deutschsprachiger EU Hinweis:

Hinweis für Geräte der Klasse A EU-Richtlinie zur Elektromagnetischen Verträglichkeit
Dieses Produkt entspricht den Schutzanforderungen der EU-Richtlinie 2004/108/EG (früher 89/336/EWG) zur Angleichung der Rechtsvorschriften über die elektromagnetische Verträglichkeit in den EU-Mitgliedsstaaten und hält die Grenzwerte der EN 55022 Klasse A ein.

Um dieses sicherzustellen, sind die Geräte wie in den Handbüchern beschrieben zu installieren und zu betreiben. Des Weiteren dürfen auch nur von der Lenovo empfohlene Kabel angeschlossen werden. Lenovo übernimmt keine Verantwortung für die Einhaltung der Schutzanforderungen, wenn das Produkt ohne Zustimmung der Lenovo verändert bzw. wenn Erweiterungskomponenten von Fremdherstellern ohne Empfehlung der Lenovo gesteckt/eingebaut werden.

Deutschland:

Einhaltung des Gesetzes über die elektromagnetische Verträglichkeit von Betriebsmittein
Dieses Produkt entspricht dem „Gesetz über die elektromagnetische Verträglichkeit von Betriebsmitteln“ EMVG (früher „Gesetz über die elektromagnetische Verträglichkeit von Geräten“). Dies ist die Umsetzung der EU-Richtlinie 2004/108/EG (früher 89/336/EWG) in der Bundesrepublik Deutschland.

Zulassungsbescheinigung laut dem Deutschen Gesetz über die elektromagnetische Verträglichkeit von Betriebsmitteln, EMVG vom 20. Juli 2007 (früher Gesetz über die elektromagnetische Verträglichkeit von Geräten), bzw. der EMV EG Richtlinie 2004/108/EC (früher 89/336/EWG), für Geräte der Klasse A.

Dieses Gerät ist berechtigt, in Übereinstimmung mit dem Deutschen EMVG das EG-Konformitätszeichen - CE - zu führen. Verantwortlich für die Konformitätserklärung nach Paragraf 5 des EMVG ist die Lenovo (Deutschland) GmbH, Gropiusplatz 10, D-70563 Stuttgart.

Informationen in Hinsicht EMVG Paragraf 4 Abs. (1) 4:
Das Gerät erfüllt die Schutzanforderungen nach EN 55024 und EN 55022 Klasse A.

Nach der EN 55022: „Dies ist eine Einrichtung der Klasse A. Diese Einrichtung kann im Wohnbereich Funkstörungen verursachen; in diesem Fall kann vom Betreiber verlangt werden, angemessene Maßnahmen durchzuführen und dafür aufzukommen.“

Nach dem EMVG: „Geräte dürfen an Orten, für die sie nicht ausreichend entstört sind, nur mit besonderer Genehmigung des Bundesministers für Post und Telekommunikation oder des Bundesamtes für Post und Telekommunikation betrieben werden. Die Genehmigung wird erteilt, wenn keine elektromagnetischen Störungen zu erwarten sind.“ (Auszug aus dem EMVG, Paragraph 3, Abs. 4). Dieses Genehmigungsverfahren ist nach Paragraph 9 EMVG in Verbindung mit der entsprechenden Kostenverordnung (Amtsblatt 14/93) kostenpflichtig.

Anmerkung: Um die Einhaltung des EMVG sicherzustellen sind die Geräte, wie in den Handbüchern angegeben, zu installieren und zu betreiben.

Eurasian compliance mark

EAC

ENERGY STAR model information

ENERGY STAR® is a joint program of the U.S. Environmental Protection Agency and the U.S. Department of Energy aimed at saving money and protecting the environment through energy efficient products and practices.

Lenovo is proud to offer our customers products with an ENERGY STAR compliant designation. Some models of the following machine types have been designed and tested to conform to the ENERGY STAR program requirement for computer servers at the time of manufacture: 70DA, 70DB, 70DC, 70DD, 70DE, 70DF, 70DV, and 70DW.

For more information about ENERGY STAR ratings for Lenovo servers, go to http://www.lenovo.com.

By using ENERGY STAR compliant products and taking advantage of the power-management features of your server, you reduce the consumption of electricity. Reduced electrical consumption contributes to potential financial savings, a cleaner environment, and the reduction of greenhouse gas emissions.

For more information about ENERGY STAR, go to:
http://www.energystar.gov

Lenovo encourages you to make efficient use of energy an integral part of your day-to-day operations. To help in this endeavor, set the following power-management features to take effect when your servers have been used:

- Processor- or core-reduced power states
- Variable speed fan control based on power or thermal readings
- Low power memory states

Index

A

about RAID 54
adjusting
  card-retaining bracket 83
advanced SATA or SAS hardware RAID
  configuring 56
Advanced Settings menu
  Setup Utility program 48
AnyRAID adapter
  locations 28
  replacing 93
AnyRAID flash module
  installing 95
  removing 96

B

backplane for up to eight 2.5-inch drives
  locations 37
backplane for up to eight 3.5-inch drives
  locations 35
backplane for up to sixteen 2.5-inch drives
  locations 36
BIOS and TSM update utilities
  software 13
Boot Manager menu
  Setup Utility program 49

C

cables
  connecting 44
card-retaining bracket
  adjusting 83
coin-cell battery
  replacing 158
configuring
  server 47
configuring RAID
  advanced SATA or SAS hardware RAID 56
  using the Lenovo ThinkServer Deployment Manager program 56
configuring the server 47
connecting
  cables 44
connector
  DisplayPort 23, 25
  serial 25
  USB 23–24
considerations, password 50
contamination, particulate and gaseous 182
cooling shroud
  reinstalling 64
  removing 64
CRU
  completing the replacement 165

D

devices, handling static-sensitive 60
DIMM
  installation rules 70
  installing 74
  removing 76
DisplayPort
  connector 23, 25
documentation
  using 175
drive partition
  removing 146

E

Ethernet connectivity
  features 9
Ethernet connector
  Setup Utility program 52
Ethernet status
  LED 25
exiting
  Setup Utility program 52
expansion slots
  features 9
export classification notice 183

F

features 7
  Lenovo ThinkServer Deployment Manager program 13
firmware
  updating 57
flashing
  the BIOS 53
front panel
  LED 21
  locations 21
front panel board
  replacing 140
front view of the server
  locations 16

G

gaseous contamination 182
German gloss statement 183
getting help 175
getting information 175

© Copyright Lenovo 2014

getting service 175
guidelines 59

H

hardware
  replacing 59
heat sink
  installing 118
  replacing 118
help, getting 175
hot-swap drive
  installing 131
  replacing 131
hot-swap redundant power supply
  installing 114
  replacing 114
hot-swap redundant power supply status
  LED 24
hot-swap-drive backplane
  locations 34
  replacing 138
hot-swap-drive status
  LED 43
hot-swap-drive status LEDs
  locations 43

I

information, getting 175
Input/Output (I/O)
  features 9
installation rules
  DIMM 70
  memory module 70
installing 102
  AnyRAID flash module 95
  DIMM 74
  heat sink 118
  hot-swap drive 131
  hot-swap redundant power supply 114
  intrusion switch 141
  memory module 74
  microprocessor 120
  optical drive 143, 147
  optical module 105
  PCIe card 82
  RAID 110i key 97
  RAID 510i key 100
  SD module 108
  server cover 165
  solid-state drive 134
  system fan 66
  tape drive 152–153
  ThinkServer RAID Super Capacitor Module 129
  TPM 112
  TSM premium module 110
interface
  Setup Utility program 47
internal drives
  features 8
intrusion switch
  installing 141
  removing 142

L

LED
  Ethernet status 25
  front panel 21
  hot-swap redundant power supply status 24
  hot-swap-drive status 43
  network status 21
  Network status 25
  power status 22
  power supply status 44
  system identification (ID) 23–24
  system status 22
Lenovo ThinkServer Deployment Manager
  software 13
Lenovo ThinkServer Deployment Manager program
  features 13
Lenovo ThinkServer Diagnostics
  software 14
Lenovo ThinkServer Energy Manager
  software 14
Lenovo ThinkServer System Manager 15
Lenovo ThinkServer System Manager Premium 15
locations 15

M

machine type, model, and serial number label
  locations 15
memory
  features 7
memory module
  installation rules 70
  installing 74
  removing 76
memory module installation
  guidelines 70
microprocessor
  features 7
  installing 120
  replacing 124

N

network status
  LED 21
Network status
  LED 25

O

optical drive
  3.5-inch-drive bays 144
  installing 143, 147

replacing 143, 151
optical module
installing 105
removing 106
option
completing the replacement 165

P

particulate contamination 182
parts replacement, completing 165
password
considerations 50
setting, changing, deleting 51
Setup Utility program 50
PCIe card
installing 82
removing 90
power status
LED 22
power supply
features 8
power supply status
LED 44
power supply status LEDs
locations 44
precautions
guidelines 59

R

rack cabinet
removing or extending the server 61
rack handles
reinstalling 63
removing 63
RAID
configuring 54
introduction 54
RAID 110i key
installing 97
removing 98
RAID 500 key
installing 102
RAID 500 key on the RAID card
removing 103
RAID 510i key
installing 100
removing 101
RAID adapter
locations 28
rear view of the server
locations 23
recovering
the BIOS 53
reinstalling
cooling shroud 64
rack handles 63
system fan cage 68
reliability, availability, and serviceability
features 10
removing
AnyRAID flash module 96
cooling shroud 64
DIMM 76
drive partition 146
intrusion switch 141–142
memory module 76
optical module 106
PCIe card 90
rack handles 63
RAID 110i key 98
RAID 500 key on the RAID card 103
RAID 510i key 101
SD module 109
server cover 61
ThinkServer RAID Super Capacitor Module 129–130
TPM 113
TSM premium module 111
removing or extending the server
rack cabinet 61
replacing
AnyRAID adapter 93
coin-cell battery 158
front panel board 140
hardware 59
heat sink 118
hot-swap drive 131
hot-swap redundant power supply 114
hot-swap-drive backplane 138
microprocessor 124
optical drive 143, 151
riser card 77
system board 160
system fan 66
tape drive 152, 156
riser card
replacing 77
road map
server setup 5

S

Save & Exit menu
Setup Utility program 49
SD module
installing 108
removing 109
serial
connector 25
server components
locations 25
server configuration
updating 168
server cover
installing 165
removing 61
server documentation 2
server package 7
server setup

© Copyright Lenovo 2014

road map 5
service, getting 175
setting, changing, deleting
password 51
Setup Utility program
Ethernet connector 52
exiting 52
interface 47
password 50
starting 47
TPM 52
using 47
software 12
Lenovo ThinkServer Deployment Manager 13
solid-state drive
installing 134
specifications 12
starting
Setup Utility program 47
startup device
selecting 51
Setup Utility program 51
static-sensitive devices
guidelines 60
static-sensitive devices, handling 60
system board 38
replacing 160
system board components
locations 38
system board jumpers
locations 41
system date
setting 50
system event log
troubleshooting and diagnostics 170
system fan
installing 66
replacing 66
system fan cage
removing 68
system fans
features 8
system identification (ID)
LED 23–24
System Information menu
Setup Utility program 48
system reliability
guidelines 60
System Security menu
Setup Utility program 49
system status
LED 22
system time
setting 50

T

tape drive
installing 152–153
replacing 152, 156
the BIOS
flashing 53
recovering 53
updating 53
updating or recovering 53
ThinkServer RAID Super Capacitor Module
installing 129
removing 129–130
ThinkServer Web address 1
TPM
installing 112
removing 113
Setup Utility program 52
troubleshooting and diagnostics
keyboard, mouse, and USB device problems 173
Lenovo ThinkServer Deployment Manager program problems 170
memory module problems 172
optical drive problems 170
status and diagnostic LEDs 169
storage drive problems 171
system event log 170
troubleshooting procedure 169
TSM premium module
installing 110
removing 111
TSM Settings menu
Setup Utility program 49
turning off the server 45
turning on the server 45
TÜV gloss statement 183

U

updating
firmware 57
server configuration 168
the BIOS 53
updating or recovering
the BIOS 53
USB
connector 23–24
using
documentation 175
passwords 50
Setup Utility program 47

V

video subsystem
features 9
viewing information
Setup Utility program 47

W

Web site
compatible options 70
working inside the server with the power on
guidelines 61