INSTRUCTION MANUAL

STAND MIXER

EN

smeg

Dear Customer,
Thank you very much for purchasing a Smeg 50's Style stand mixer.
By choosing Smeg, you have selected an appliance which combines iconic style with innovative technical design and attention to detail.
This appliance co-ordinates perfectly with other Smeg products, or equally a standalone statement piece in your kitchen.
We hope you enjoy using your new appliance!
For any further information please visit www.smeg50style.com or www.smeg.com.

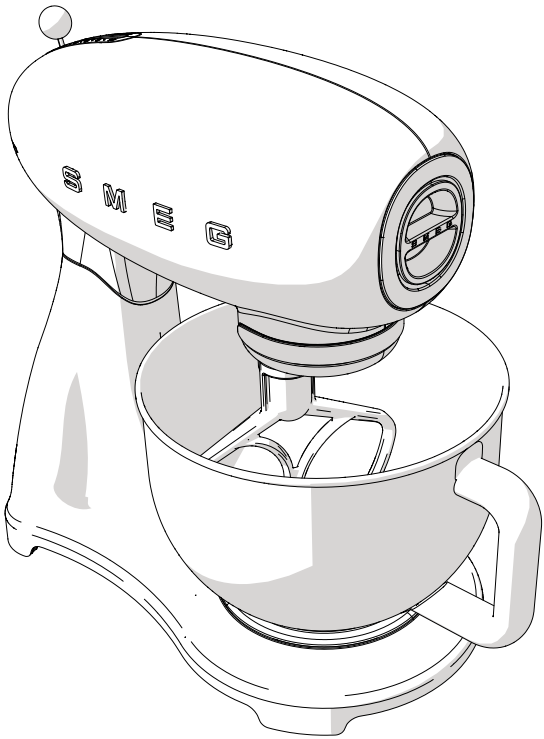

Model SMF01
Stand mixer

Contents

EN

1	**Instructions**	**4**
1.1	Introduction	4
1.2	This user manual	4
1.3	Intended use	4
1.4	General safety instructions	5
1.5	Manufacturer liability	7
1.6	Identification plate	7
1.7	Disposal	7
2	**Description**	**8**
2.1	Product description	8
2.2	Standard accessories	10
3	**Use**	**11**
3.1	Before first use	11
3.2	Using the stand mixer	11
3.3	Using the pouring shield	16
3.4	Functions	17
3.5	Speed setting suggestions	18
4	**Cleaning and care**	**21**
4.1	Instructions	21
4.2	Cleaning the surfaces	21
4.3	Ordinary daily cleaning	21
4.4	Food stains or residues	21
4.5	What to do if...	22

We advise you to read this manual carefully, it contains all the instructions for maintaining the appliance's aesthetic and functional qualities.
For further information on the product: www.smeg.com

The manufacturer reserves the right to make any changes deemed useful for improvement of its products without prior notice. The illustrations and descriptions contained in this manual are therefore not binding and are merely indicative.

1 Instructions

1.1 Introduction

Key information for the user:

Instructions

General information on this user manual, on safety and final disposal.

Description

Description of the appliance and its accessories.

Use

Information on the use of the appliance and its accessories, advice on preparing recipes with the appliance.

Cleaning and care

Information for correct cleaning and care of the appliance.

Safety instructions

Information

Advice

1.2 This user manual

This user manual is an integral part of the appliance and must therefore be kept in its entirety and within the user's reach for the whole working life of the appliance.

1.3 Intended use

- The appliance is designed exclusively for home use.
- Do not use the appliance for anything other than the intended use.
- Use the appliance indoors.
- The stand mixer can be used to mix, whip, whisk and knead solid and liquid ingredients to speed up various preparations and recipes. With the addition of optional accessories it is able to grind, mince, grate, mill, roll out and cut pasta into different shapes, etc.
- The appliance is not designed to operate with external timers or with remote-control systems.
- This appliance may not be used by people (including children) of reduced physical and mental capacity, or lacking in experience in the use of electrical appliances, unless they are supervised or instructed by adults who are responsible for their safety.

1.4 General safety instructions

Follow all safety instructions in order to be able to use the appliance safely.

- Read this user manual carefully before using the appliance.
- Switch off the appliance immediately after use.
- Do not leave the appliance unattended while it is operating.
- Disconnect the appliance from the power socket as soon as you have finished using it and before cleaning it.
- Do not immerse the appliance, the power cord or the plug in water or any other liquid.
- Do not use the appliance when the power cord or the plug is damaged or when the appliance has been dropped or is damaged in any manner.
- If the supply cord is damaged, it must be replaced by the manufacturer, its service agent or similarly qualified persons in order to avoid a hazard.
- The cable is short to prevent accidents. Do not use an extension cord.
- Ensure the cord does not come into contact with sharp edges.
- Do not pull on the cord to unplug it from the power socket.
- Do not place the appliance above or near lit hob burners or electric rings, inside an oven or near other heat sources.
- Do not try to repair the appliance yourself or without the intervention of a qualified engineer.
- In the event of a fault, repairs should only be carried out by a qualified engineer.
- Do not modify the appliance.
- Never try to put out a fire or flames with water: turn off the appliance and remove the plug from the socket and smother the flames with a fire blanket or other appropriate cover.
- This appliance shall not be used by children. Keep the appliance and its cord out of reach of children.
- Children shall not play with the appliance.
- This appliance can be used by children aged from 8 years and above and persons with reduced physical, sensory or mental capabilities or lack of experience and knowledge if they have been given supervision or instruction concerning use of the appliance in a safe way and understand the hazards involved. Children shall not play with the appliance. Cleaning and user maintenance shall not be made by children without supervision.
- Appliances can be used by persons with reduced physical, sensory or mental capabilities or lack of experience and knowledge if they have been given supervision or instruction concerning use of the appliance in a safe way and if they understand the hazards involved.
- Switch off the appliance and disconnect from supply before changing accessories or approaching parts that move in use.

Instructions

For this appliance

- In order to avoid a hazard due to inadvertent resetting of the thermal cutout, this appliance must not be supplied through an external switching device, such as a timer, or connected to a circuit that is regularly switched on and off by the utility.
- Always disconnect the appliance from the supply if it is left unattended and before assembling, disassembling or cleaning.
- Do not insert, remove or replace standard accessories with the safety lock disengaged (motor head lowered).
- Do not touch moving parts while the appliance is operating. Keep hands, hair, clothing, spatulas and any other objects away from the mixer's standard and optional accessories to avoid personal injury or damage to the machine.
- Do not remove accessories while the mixer is operating.
- Check that the bowl is correctly positioned and locked into its base before you start using the appliance with its accessories.
- Do not release or remove the bowl while the appliance is operating.
- Do not exceed the bowl's maximum capacity.
- Let the appliance cool down before cleaning.
- Only use original standard and optional accessories provided by the manufacturer. The use of non-original components, standard and optional accessories could lead to personal injury or damage to the appliance.
- Do not use accessories other than those supplied with the appliance.
- Do not place objects on top of the appliance.
- Do not use harsh detergents or sharp objects to wash or remove residue from the bowl, standard or optional accessories.
- Keep a close eye on children and ensure they do not play with the appliance.
- This appliance is intended to be used in household and similar applications such as:
  - staff kitchen areas in shops, offices and other working environments;
  - farm houses;
  - by clients in hotels, motels and other residential type environments;
  - bed and breakfast type environments.

1.5 Manufacturer liability

The manufacturer shall not be held responsible for personal injuries or property damage caused by:

- Any use of the appliance other than the one it was designed for
- Not having read the user manual
- Tampering with any part of the appliance
- Use of non-original spare parts
- Not following the safety instructions

1.6 Identification plate

The identification plate bears the technical data, serial number and brand name of the appliance. Do not remove the identification plate for any reason.

1.7 Disposal

This appliance must be disposed of separately from other waste (Directives 2002/95/EC, 2002/96/EC, 2003/108/EC). The appliance does not contain substances in quantities sufficient to be considered hazardous to health and the environment, in accordance with current European directives.

Electrical power
Danger of electrocution

- Disconnect the main power supply.
- Disconnect the power cable from the electrical system.

- **Old appliances do not belong in household waste!** To comply with current legislation, old appliances, having reached the end of their useful lives, should be taken to a disposal facility where they can be sorted. In this way, any valuable material contained in the old appliances can be recycled, helping to protect the environment. The relevant local authorities or their waste disposal operators can provide further information.

The appliance is packed in non-polluting and recyclable materials.

- Dispose of the packing materials at an appropriate disposal facility.

Plastic packaging
Danger of suffocation

- Do not leave the packaging or any part of it unattended.
- Do not let children play with the plastic bags.

2 Description

2.1 Product description

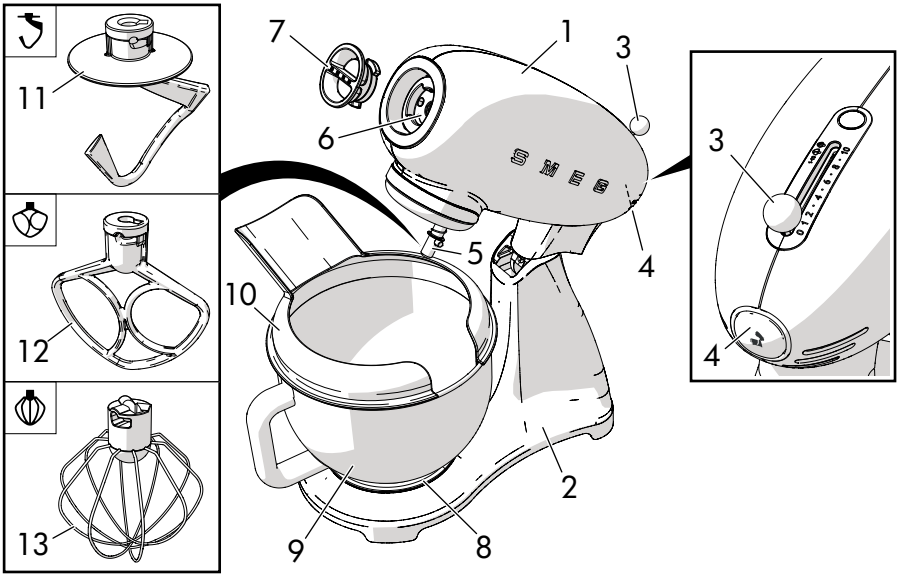

Model SMF01 - Stand Mixer

1 Motor head
2 Body
3 Power and speed selector
4 Head raising/lowering release button
5 Lower attachment for standard accessories
6 Front attachment hub for optional accessories
7 Front hub cover
8 Bowl base
9 Bowl
10 Pouring shield
11 Dough hook
12 Flat beater
13 Wire whisk

Motor head (1)

Upper part of the appliance, responsible for rotating the standard and optional accessories.

Power and speed selector (3)

Lever for speed selection.

The '0' position of the lever corresponds to the OFF position (appliance off).

To start the appliance, position the lever on one of the 10 available speeds (positions 1-10), depending on the type of mixing required.

See "3.5 Speed setting suggestions" for more details and suggestions.

Head raising/lowering release button (4)

Button which releases the motor head to position it in one of its two possible configurations (raised or lowered position).

Lower attachment for standard accessories (5)

Attachment for inserting standard accessories. Holds the accessory solidly in position during planetary movement.

Front attachment hub for optional accessories (6)

Attachment for connecting optional accessories.

It is protected by a removable cover.

Bowl base (8)

Base with slots in which to insert the bowl and which then lock it in position.

Bowl (9)

Stainless-steel bowl; capacity 4.8 litres.

Ideal for holding both large and small quantities of ingredients.

The handle simplifies insertion and removal.

Pouring shield (10)

Plastic shield which can be attached to the bowl to stop ingredients splattering/coming out of the bowl and to facilitate the addition of new ingredients.

2.2 Standard accessories

Aluminium flat beater

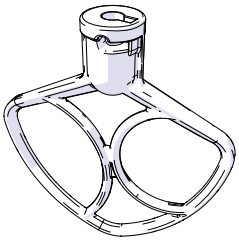

For combining, mixing, and starting all mixing procedures.

For preparing cake batters and pastries, biscuits, icing, etc. and for other, thicker batters and mixes.

Stainless-steel wire whisk

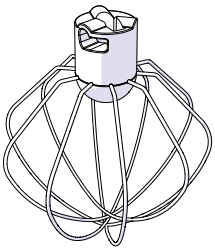

For beating, mixing, whisking, whipping ingredients such as butter, eggs, cream, etc.

Also ideal for preparing creams, custards, sauces, etc.

Aluminium dough hook

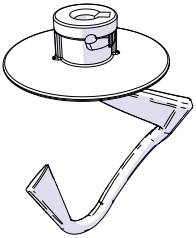

For slowly combining, mixing and kneading leavened dough type mixtures including bread, pasta, pizza, etc.

Pouring shield

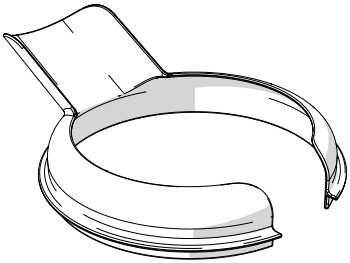

For protecting against splattering and to facilitate the addition of ingredients when in use.

> The standard and optional accessories intended to come into contact with food are made of materials that comply with the provisions of current legislation.

3 Use

Danger of electrocution

- Plug into a grounded 3 prong outlet.
- Do not remove earth prong.
- Do not use an adapter.
- Do not use an extension cord.
- Failure to follow these instructions could result in death, fire, or electrical shock.

3.1 Before first use

1. Remove any protective films or other packaging from the outside or inside of the appliance, including standard accessories.
2. Remove any labels (apart from the technical data plate) from the appliance, its components and standard accessories.
3. Remove and wash the bowl, the pouring shield and standard accessories (see "4 Cleaning and care").
4. Clean the body and head of the appliance with a damp cloth.
5. Dry the components thoroughly and place them in their working positions.

3.2 Using the stand mixer

1. Place the mixer on a flat, stable and dry surface.
2. Press the release button (**1**).
3. Hold down the button and raise the head (**2**), accompanying its movement with your hand.

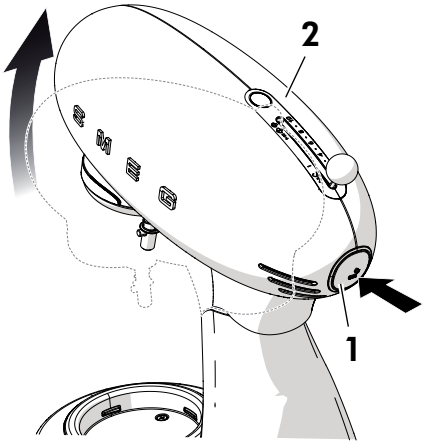

4. Insert the bowl (**3**) in its base (**4**). Grasp the bowl by its handle (**5**) and turn the bowl (**3**) clockwise until it locks into place.

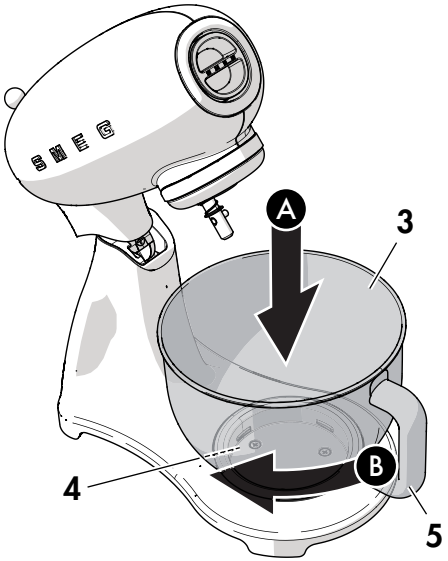

5. Select the accessory required based on the type of mixing to be performed.

Moving parts
Danger of personal injury

- Do not operate the mixer with the accessory without having locked the bowl in position.

6. Insert the accessory (**6**) in the lower attachment (**7**) and push it upwards. Keep pressing the accessory upwards and turn it anticlockwise until the pin (**8**) locks fully into place.

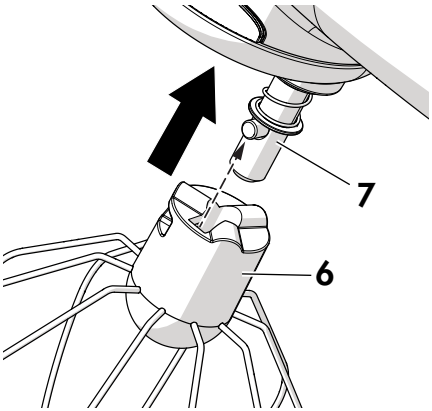

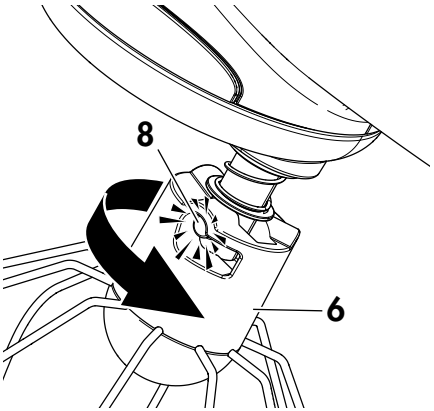

Ensure that the accessory is correctly locked into place in the attachment.

7. Add the ingredients to the bowl.
8. To close, bring the motor head down by pressing the release button (**1**), and then tilt the motor head (**2**) backwards slightly until it releases.
9. Keep the button pressed down and lower the head (**2**), accompanying its movement with your hand.

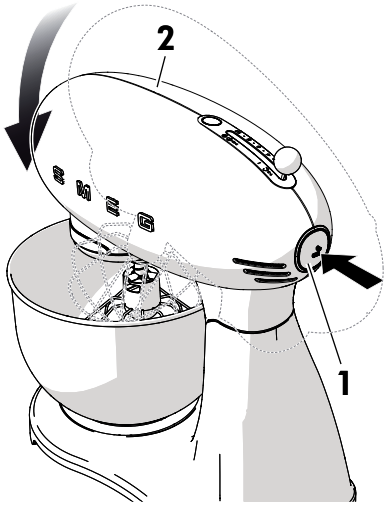

10. Position the pouring shield (**9**) on the bowl if required, with the opening facing outwards.

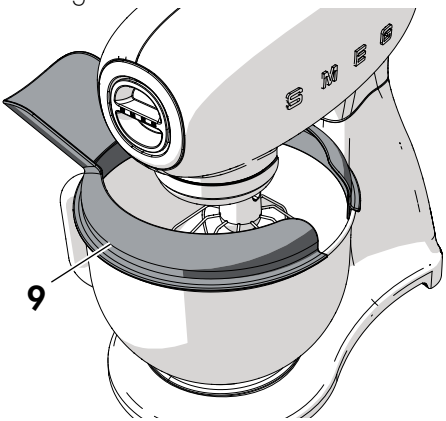

11. Check that the speed selector (**10**) is positioned on '0' (OFF).
12. Insert the plug into the power socket.
13. Select the required speed (from 1 to 10) using the selector (**10**) to start the appliance and begin mixing the ingredients. See "3.5 Speed setting suggestions".

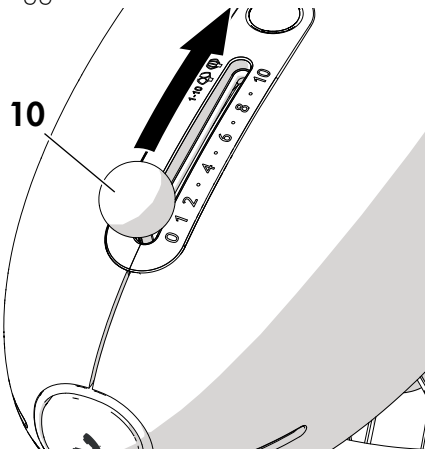

Warning!

- For greater safety, each time that power is cut to the motor, for example by raising the motor head or unplugging the appliance at the socket, it is first necessary to return the speed selector to zero in order to restart the mixer.

In order to stop the appliance and raise the head to change accessory or remove the bowl, move the speed selector to '0' (OFF).

Moving parts

Danger of personal injury and damage to the appliance

- Do not touch the accessories while the appliance is moving
- Do not operate the mixer with the accessory inserted and the bowl empty.

When you have finished using the mixer:

1. Position the speed selector (**10**) on '0' (OFF) and remove the plug from the socket.
2. Remove the pouring shield, if it is on the bowl (**9**).

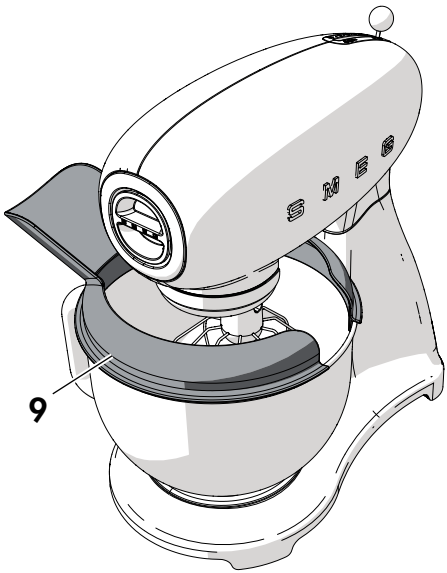

3. Press the release button (**1**) to raise the head (**2**).

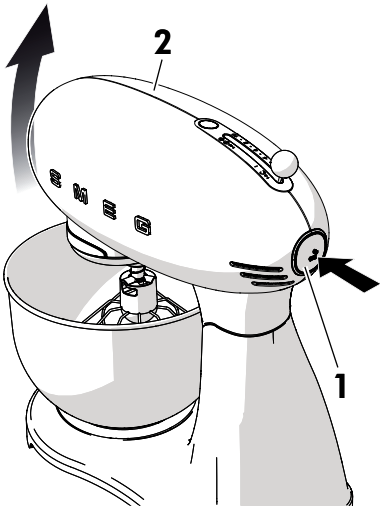

4. Push the accessory (**6**) upwards slightly and turn it clockwise to unlock it from the pin (**8**).
   Extract the accessory (**6**) from the lower attachment (**7**).

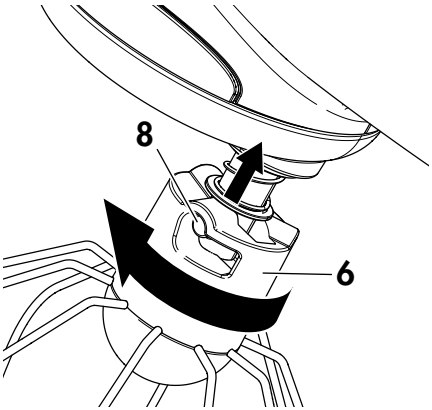

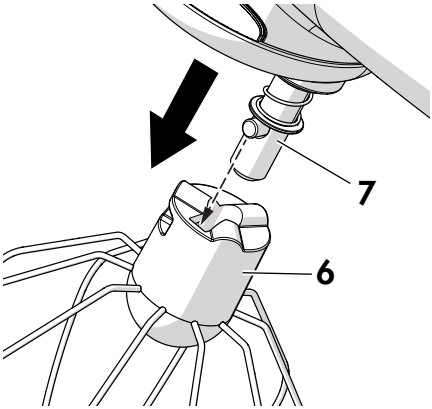

5. Remove the bowl (**3**) from its base (**4**) by turning it anticlockwise to release it.

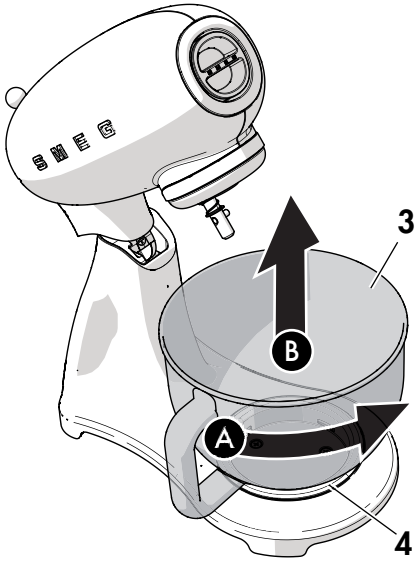

3.3 Using the pouring shield

1. Fit the pouring shield (**1**) to the upper lip of the bowl after inserting the bowl in its base, the accessory in the lower attachment and lowering the head to the operating position.

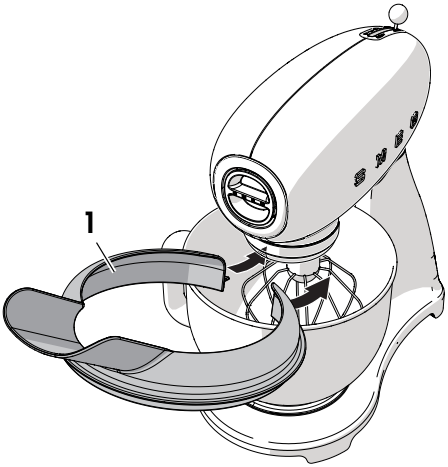

2. Fit the pouring shield with the opening (**1**) facing outwards in order to add ingredients to the bowl without stopping the mixer.

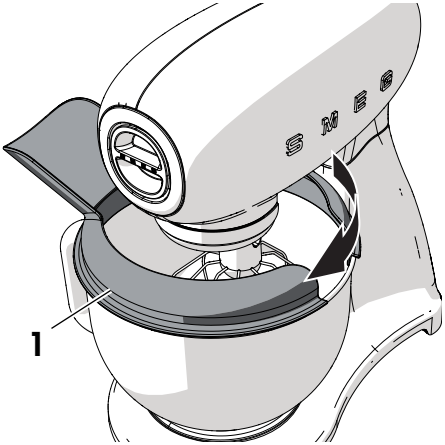

Moving parts

Risk of damage to the pouring shield

- Remove the pouring shield to raise or lower the head with the accessory fixed to the lower attachment.

3.4 Functions

Safety lock system

The appliance has a safety system which automatically shuts off the appliance when the motor head is raised.

> You should nevertheless always place the speed selector in the 0 (OFF) position before pressing the button to move the motor head.

Smooth Start Function

The Smooth Start function starts the appliance up with a reduced initial speed, regardless of the speed set with the selector.

The speed progressively increases until the set speed is reached.

This avoids damage to the appliance and the accessories, and ensures ingredients are not thrown from the bowl.

Planetary movement

The planetary movement is generated by rotation (**1**) of the accessory around its axis in the opposite direction to the rotary movement (**2**) of the mixer.

This movement maximises coverage of the entire bowl with consistent results for all mixtures.

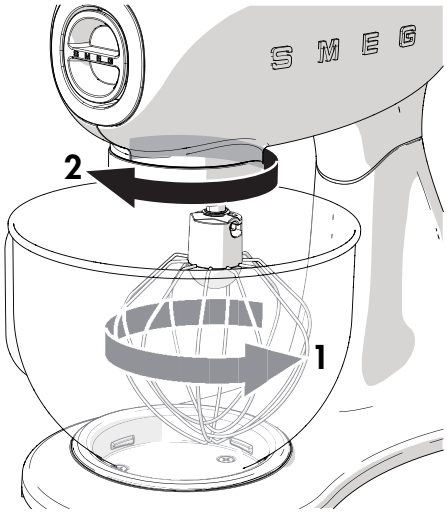

> Hot appliance
>
> - Following prolonged use, the upper part of the motor head may become warm. This is not usually indicative of a malfunction, however.

3.5 Speed setting suggestions

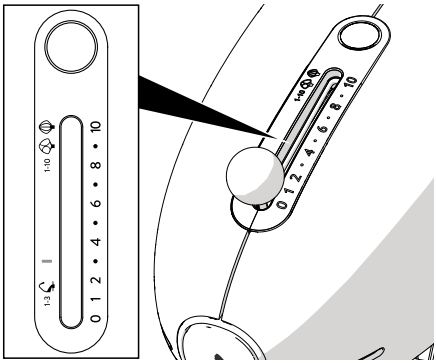

The speed selector shows the most appropriate accessory to use with the selected speed.

The speeds indicated in the table are approximate and can vary depending on the recipe and the interaction of the different ingredients used.

Speed setting	Function	Accessory
LOW 1 - 3	COMBINING AND KNEADING Combining ingredients. Kneading - preparing leavened doughs (bread, pizza, confectionery, etc.).	
MEDIUM 4 - 7	MIXING Mixing and beating dense batters. Beating eggs and butter, cake mixes such as fruit cake.	
HIGH 8 - 10	WHIPPING AND WHISKING Whisking light or dense batters such as sponge cake mixes, whipping cream, egg whites or sauces.	

General advice

- Turn on the appliance at a low speed until all the ingredients are mixed, then increase the speed on the basis of the required operation.
- When adding ingredients, always pour them onto the edge of the bowl and not directly onto the moving accessory.
- Reduce the speed when you add dry or liquid ingredients to stop them splattering or being ejected from the bowl. Increase the speed again when they have been mixed in.
- Use the pouring shield on the bowl for liquid mixtures or when adding dry ingredients to avoid dirtying objects in the vicinity of the mixer or being hit by splattered liquids or powder.
- Keep the bowl and accessories clean, and attach them to the appliance only when they are perfectly dry.
- Clean the head and body of the mixer carefully using a damp cloth if they are dirty.
- Do not put the appliance and its accessories away unless they have been thoroughly cleaned and dried.

Recommendations for recipes using eggs

- For the best results, use eggs at room temperature.
- When working with stiff pasta doughs, do not exceed the quantity equivalent to using 3 medium eggs and add small quantities of water if necessary.
- Before whisking egg whites, ensure that there is no residue of oil/fat or egg yolk in the bowl or on the accessories.
- The mixer allows you to whisk egg whites very quickly. Monitor the process carefully to avoid overworking them.

Recommendations for kneading

- Use speed setting 2 or 3 to knead leavened doughs or particularly tough mixtures such as egg pasta. Using the appliance on higher speeds with these stiffer doughs would risk overloading it, increasing the probability of a malfunction.
- Do not exceed 1000 g of standard flour or 800 g of wholewheat or strong flour (e.g. bread flour).
- When preparing egg pasta, do not exceed a quantity equivalent to using 3 medium eggs and add small quantities of water if necessary.
- Take care to use an adequate proportion of water in the dough (at least 50-60% by weight compared to the quantity of flour). Doughs which are too dry and therefore stiff can overload the motor, increasing the probability of a malfunction. If you notice that the motor is straining, add small quantities of water to help the mixture come together, or divide the dough mixture in two and work the quantities separately.
- Do not exceed the bowl's maximum capacity so as not to overload the appliance.
- If the mixer is struggling, turn it off and remove half of the bowl's contents. The appliance should then be able to process the two halves separately.
- Ingredients mix more easily if liquids are added to the bowl first.

4 Cleaning and care

4.1 Instructions

Improper use
Danger of electrocution

- Switch off and unplug the appliance before cleaning the mixer and its standard and optional accessories.

Improper use
Risk of damage to surfaces

- Do not use steam jets to clean the appliance.
- Do not use cleaning products containing chlorine, ammonia or bleach on steel parts or parts with metallic finishes (e.g. anodised, nickel- or chrome-plated).
- Do not use abrasive or corrosive detergents (e.g. powder products, stain removers and metallic sponges).
- Do not use rough or abrasive materials or sharp metal scrapers.

4.2 Cleaning the surfaces

To keep the surfaces in good condition, they should be cleaned regularly after use. Let them cool first.

4.3 Ordinary daily cleaning

To clean the mixer body, wipe it down with a damp cloth. Dry it with a soft cloth or microfibre cloth.

Splattered liquids or batters should be removed immediately using a soft, damp, cotton cloth.

The bowl and accessories may be washed in a dishwasher or by hand using neutral detergent and a soft cloth.

Wash the plastic pouring shield by hand with a soft sponge and neutral detergent.

Dry it with a soft cloth or microfibre cloth.

4.4 Food stains or residues

Do not use metallic sponges or sharp scrapers as they will damage the surfaces.

Use ordinary non-abrasive products with the aid of wooden or plastic utensils if necessary. Wipe over thoroughly and dry with a soft cloth or microfibre cloth.

4.5 What to do if...

Problem	Possible cause	Solution
The motor will not start	The motor has overheated.	Disconnect the mixer from the power and leave the motor to cool.
	The plug is not properly inserted in the power socket.	Insert the plug into the power socket. Do not use adaptors or extensions. Check that the house main breaker is on.
	The cable is defective.	Have the cable replaced at an Authorised Service Centre.
	Lack of power.	Check that the house main breaker is on.
	The head has been raised during operation.	The safety lock system has operated. Move the speed selector to 0 (OFF), press and hold down the button on the rear to release the head and lower it.

Problem	Possible cause	Solution
The mixer vibrates	The mixer is not resting on a stable surface.	Place the mixer on a flat, stable surface.
	The anti-slip rubber feet are worn.	Have them replaced at an Authorised Service Centre.
	The speed used is too high or the load is excessive.	Set a lower speed and ensure the bowl has not been overfilled.
	The bowl has not been correctly locked into its base.	Check that the bowl is correctly locked into its base.
The accessory hits the bottom of the bowl	The lower attachment has come loose over time.	Have the mixer checked and adjusted at an Authorised Service Centre.
	The accessory is not correctly locked into position.	Move the speed selector to 0, press the button on the rear of the appliance to raise the head and check that the accessory is correctly locked into position in the lower attachment.

Problem	Possible cause	Solution
The accessory is struggling to turn inside the bowl	The dough mixture is too thick and is stopping the accessory from turning.	Add water or other liquid to loosen the dough mixture.
	The bowl is too full.	Remove half the bowl's contents and work it separately.

If the problem has not been resolved or in the event of another type of fault, contact your local technical support centre.