DS-760/DS-860 User's Guide

Contents

DS-760/DS-860 User's Guide **7**
Scanner Basics **8**
Scanner Parts Locations 8
Scanner Parts 9
Scanner Buttons and Lights 11
Page Separation Lever 12
User Replaceable Epson Scanner Parts 13
Changing the Power Off Setting 14
Loading Originals **15**
Loading Originals in the Input Tray 15
Loading Multiple Sizes of Originals in the Input Tray 19
Original Document Loading Capacity 23
Loading Plastic Cards in the Input Tray 25
Card Loading Capacity 29
Loading Special Documents 30
Large or Thick Original Loading Capacity 35
Using the Network Interface Unit **37**
Network Interface Unit Parts 37
Connecting the Network Interface Unit 38
Setting Up Network Scanning 38
Scanning to Network Computers from the Network Interface Unit 40
Scanning **41**
Starting a Scan from a Scanner Button 41
Adding and Assigning Scan Jobs 42
Scanning with Document Capture Pro 43
Scanning with Epson Scan 46
Available Image Adjustments 48
Scanning Special Projects 49
Scanning Two Originals onto One Sheet (Stitching Images) 49
Scanning Multi-Page Originals as Separate Files 52

Scanning to a SharePoint Server or Cloud Service 54
Cleaning and Transporting Your Scanner 56
Cleaning Your Scanner 56
Cleaning Inside Your Scanner 56
Checking the Scanner Roller Counter 59
Replacing the Scanner Rollers 60
Replacing the Pickup Rollers 61
Replacing the Separation Rollers 68
Resetting the Scanner Roller Counter 72
Transporting Your Scanner 73
Solving Problems 75
Scanner Light Status 75
Solving Scanning Problems 76
Scanner Does Not Turn On or Turns Off Unexpectedly 77
Scanner Button Does Not Work as Expected 77
Scanning Software Does Not Operate Correctly 77
Cannot Start Epson Scan 78
Original Feeds Incorrectly in Scanner 78
Original Jams in Scanner 79
Scanning is Slow 81
Solving Network Interface Unit Problems 82
Solving Scanned Image Quality Problems 82
Back of Original Image Appears in Scanned Image 83
Scanned Characters are Blurry 83
Characters are not Recognized During Conversion to Editable Text (OCR) 83
Ripple Patterns Appear in an Image 84
Line of Dots Appears in All Scanned Images 84
Scanned Image Edges are Cropped 84
Uninstalling Scanner Software 85
Where to Get Help 85
Technical Specifications 87
Windows System Requirements 87
General Specifications 87

Dimension Specifications 88
Electrical Specifications 88
Environmental Specifications 89
USB Interface Specifications 90
Safety and Approvals Specifications 90
Notices 91
Important Safety Instructions 91
Restrictions on Copying 93
Default Delay Times for Power Management for Epson Products 93
Trademarks 93
Copyright Notice 94
libTIFF Software Acknowledgment 94
libjpeg-turbo 95
A Note Concerning Responsible Use of Copyrighted Materials 96
Copyright Attribution 96

DS-760/DS-860 User's Guide

Welcome to the DS-760/DS-860 *User's Guide*.

For a printable PDF copy of this guide, click here.

Scanner Basics

See these sections to learn about the basic features of your scanner.

Scanner Parts Locations
User Replaceable Epson Scanner Parts
Changing the Power Off Setting

Scanner Parts Locations

See these sections to identify the parts on your scanner.

Scanner Parts
Scanner Buttons and Lights
Page Separation Lever

Parent topic: Scanner Basics

Scanner Parts

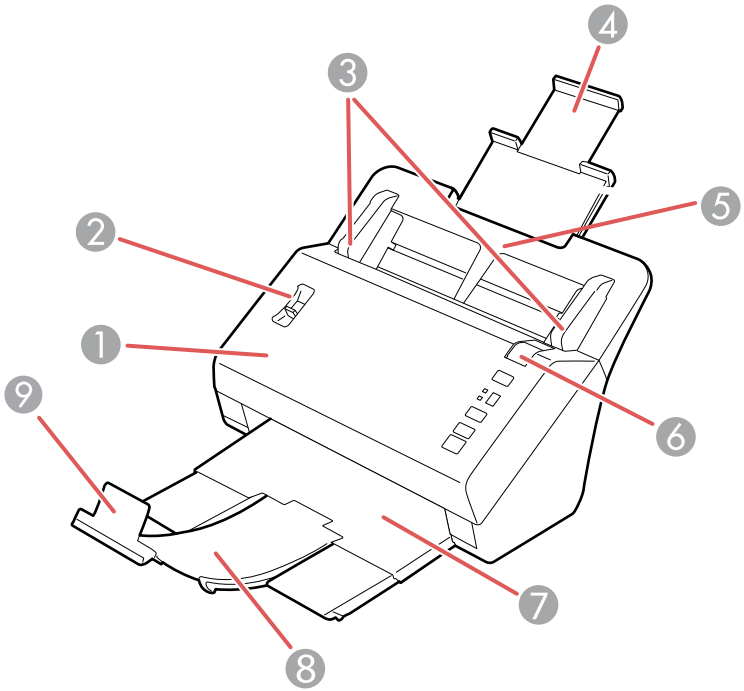

1 Scanner cover
2 Page separation lever
3 Edge guides
4 Input tray extension
5 Input tray
6 Cover open lever
7 Output tray
8 Output tray extension
9 Stopper

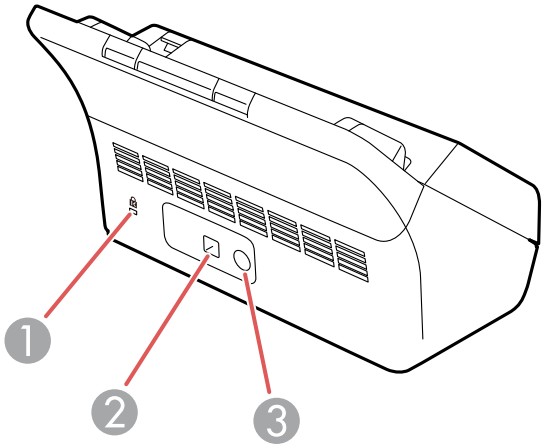

1 Kensington security slot
2 USB port
3 Power inlet

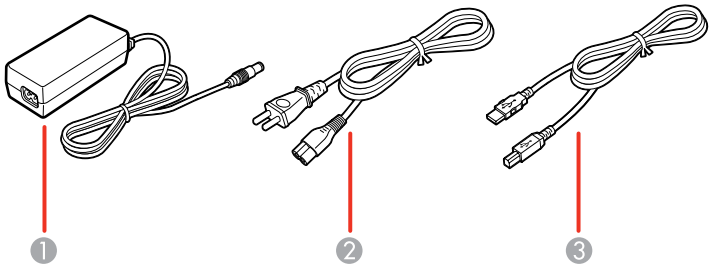

1 AC adapter
2 Power cord
3 USB cable

Parent topic: Scanner Parts Locations

Scanner Buttons and Lights

Buttons

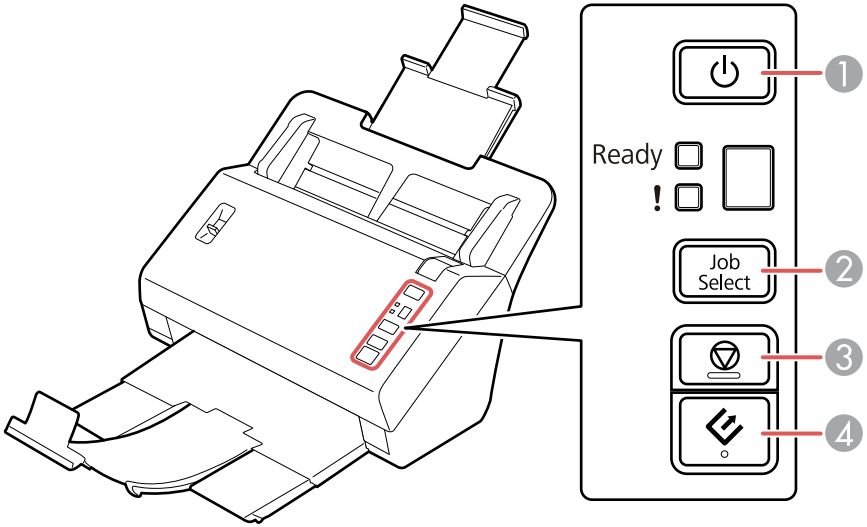

1 The ⏻ power button

2 The **Job Select** button

3 The ▽ stop button

4 The ⇲ start button

Lights

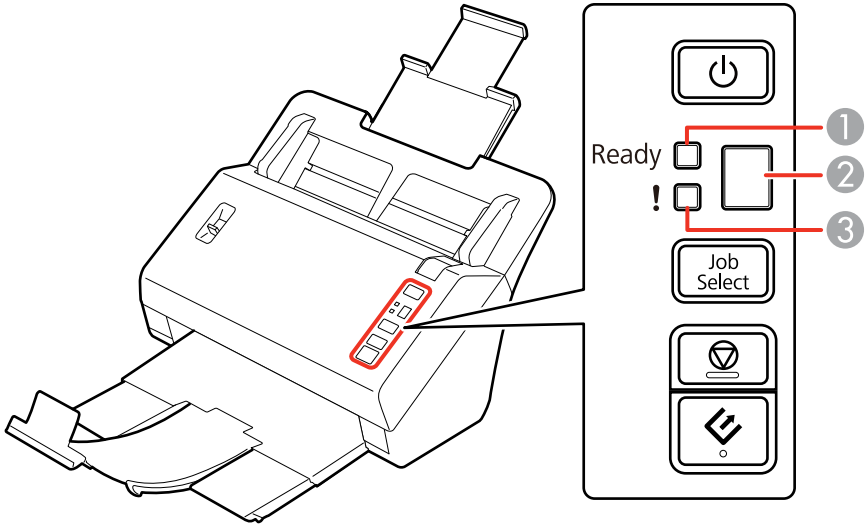

1 The **Ready** light

2 The numeric display

3 The **!** error light

Parent topic: Scanner Parts Locations

Related references

Scanner Light Status

Page Separation Lever

You can scan plastic cards, folded documents, envelopes, or any document that requires an optional carrier sheet by adjusting the position of the page separation lever.

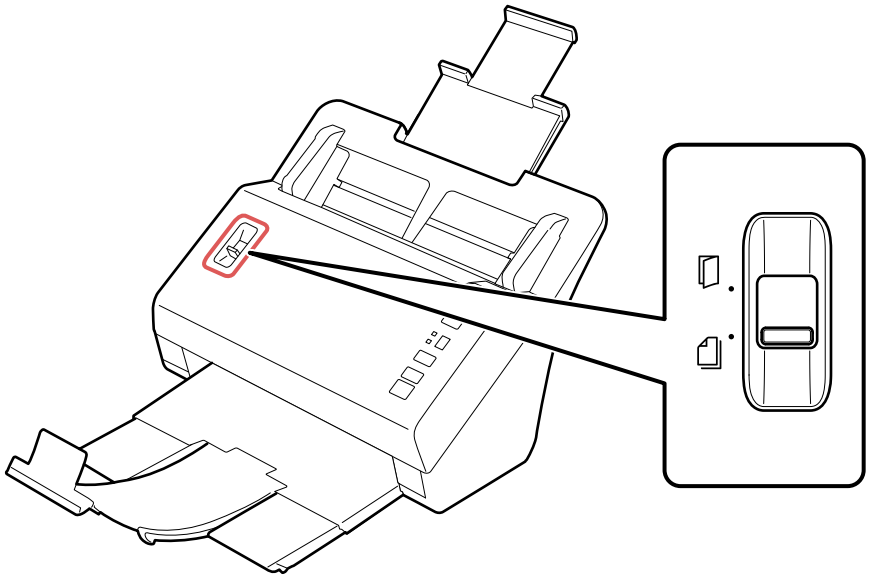

- Move the separation lever to this position only when scanning plastic cards, folded documents, envelopes, or any document that requires an optional carrier sheet.
- Leave the separation lever in this position when scanning standard single- or multiple-page documents to prevent paper jams.

Parent topic: Scanner Parts Locations

Related tasks

Loading Originals in the Input Tray

Loading Plastic Cards in the Input Tray

Loading Special Documents

User Replaceable Epson Scanner Parts

You can purchase genuine Epson accessories at epson.com (U.S. sales) or epson.ca (Canadian sales). You can also purchase accessories from an Epson authorized reseller. To find the nearest one, call 800-GO-EPSON (800-463-7766).

Part	Part number
Network interface unit	B12B808441
Carrier sheet	B12B813431
Roller assembly kit	B12B813581

Parent topic: Scanner Basics

Changing the Power Off Setting

You can use the Epson Scan Settings utility to change the time period before the scanner turns off automatically.

1. Do one of the following to access the Epson Scan Settings utility:
   - **Windows 8.x**: Navigate to the **Apps** screen and select **EPSON Scan Settings**.
   - **Windows (other versions)**: Click or **Start**, and select **All Programs** or **Programs**. Select **Epson**, then **EPSON Scan**, then click **EPSON Scan Settings**.
2. Click **Energy Saving**.

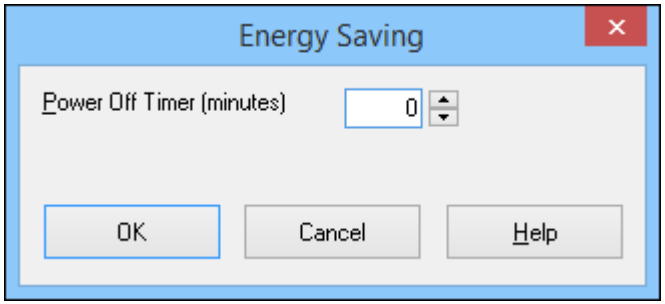

3. Enter the time period you want before the scanner turns off automatically as the **Power Off Timer** setting. If you enter a value of 0, the scanner will not turn off automatically.
4. Click **OK**.

Parent topic: Scanner Basics

Loading Originals

Follow the instructions here to load your originals into the scanner.

Loading Originals in the Input Tray
Loading Plastic Cards in the Input Tray
Loading Special Documents

Loading Originals in the Input Tray

You can load originals that meet the document specifications in the input tray.

Caution: Do not load photos, or valuable original documents or artwork, directly into the input tray. This may wrinkle or damage the original. Load these originals using an optional carrier sheet.

1. Pull up the input tray extension, extend the output tray, and flip up the stopper.

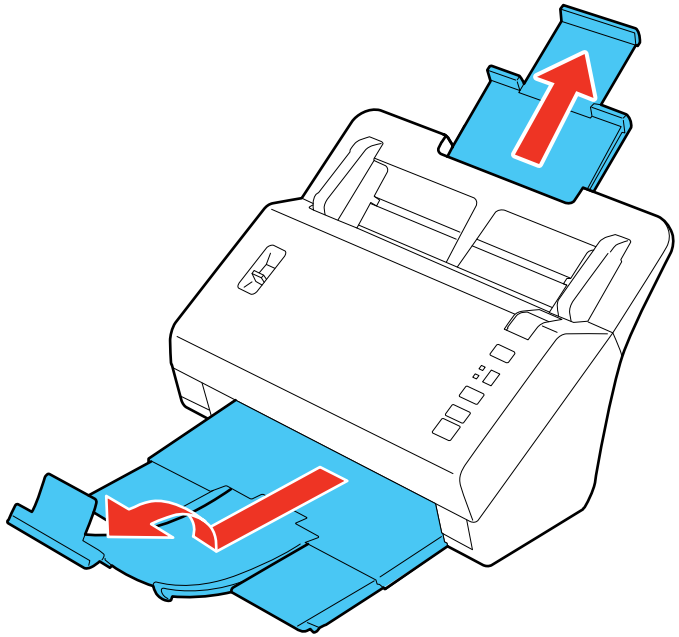

Note: If you are scanning originals longer than Letter (8.5 × 11 inches [216 × 279 mm]) size, do not flip up the stopper.

2. Slide the input tray edge guides all the way out.

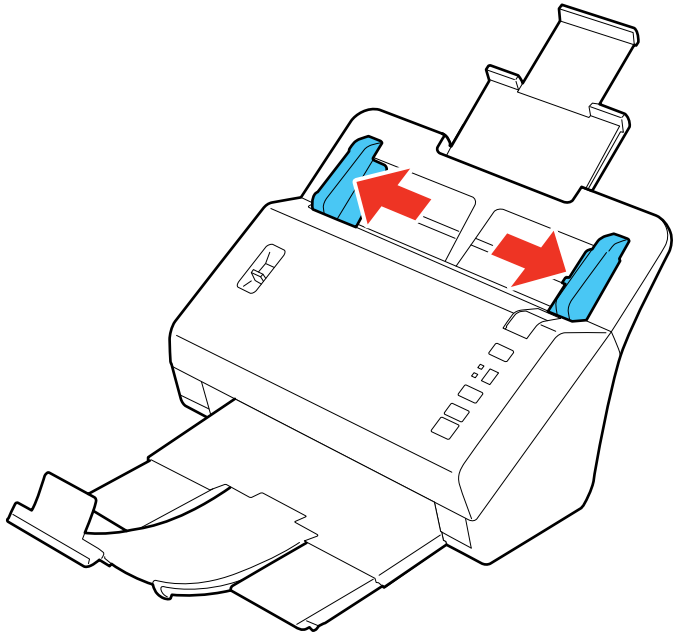

3. Check to make sure that the page separation lever is in the position shown here.

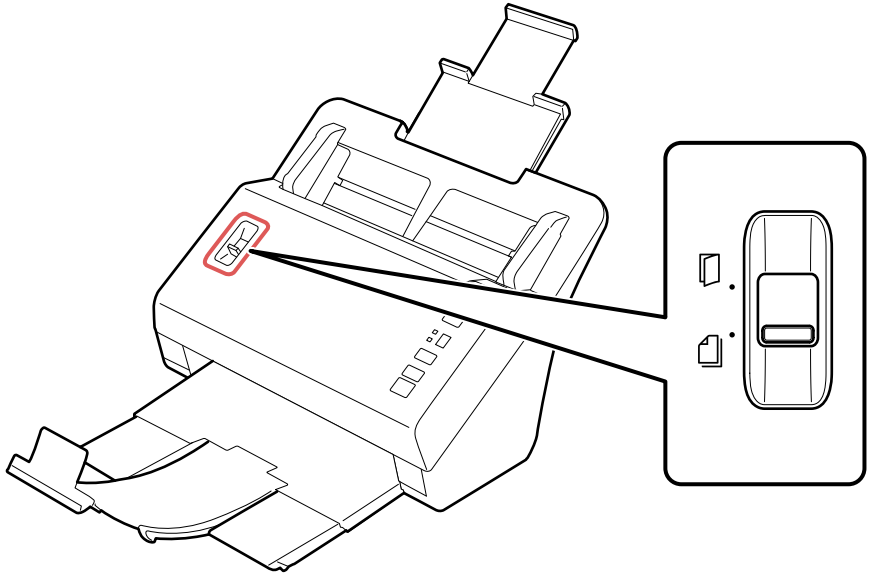

Note: To prevent paper jams, keep the lever in this position for most types of documents.

4. If you are loading a multi-page document, fan your stack of originals and tap them gently on a flat surface to even the edges.

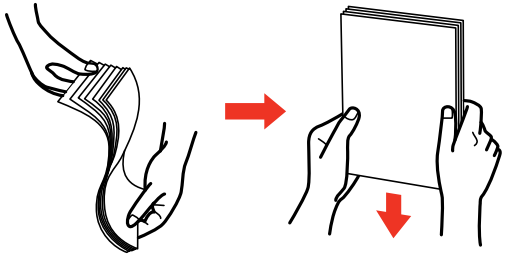

5. Slide your originals into the input tray as shown until they meet resistance. Make sure the printed side is face down and top edge first.

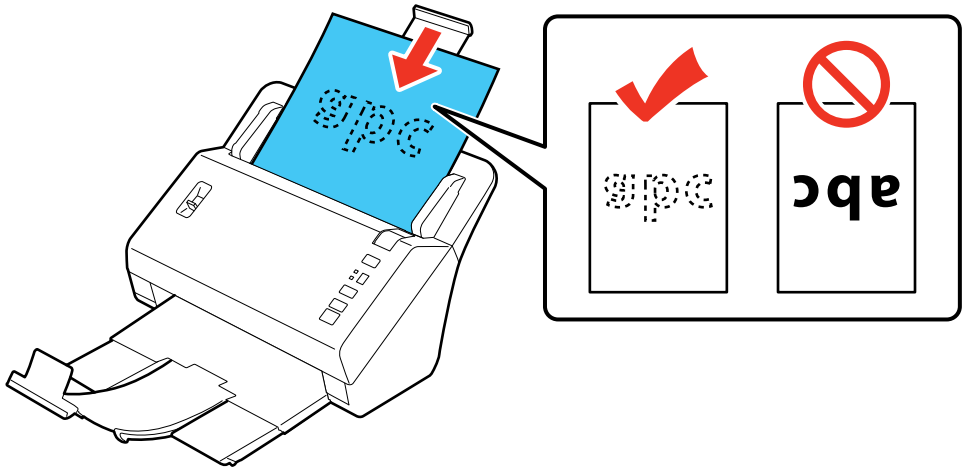

Note: If you are loading a paper business card, load it horizontally.

6. Slide the edge guides against the edges of the original.

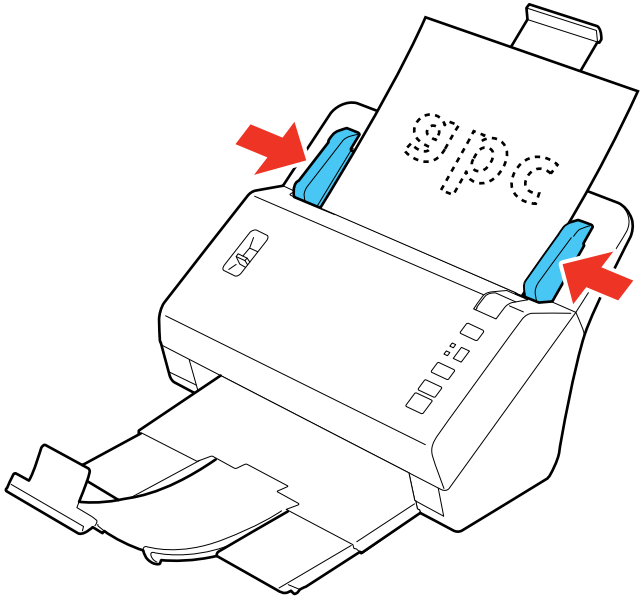

Loading Multiple Sizes of Originals in the Input Tray
Original Document Loading Capacity

Parent topic: Loading Originals

Related references

Page Separation Lever

Loading Multiple Sizes of Originals in the Input Tray

You can load a mixture of originals at different sizes that meet the document specifications in the input tray.

Warning: Do not load photos, or valuable original documents or artwork, directly into the input tray. This may wrinkle or damage the original. Load these originals using an optional carrier sheet.

1. Pull up the input tray extension, extend the output tray, and flip up the stopper.

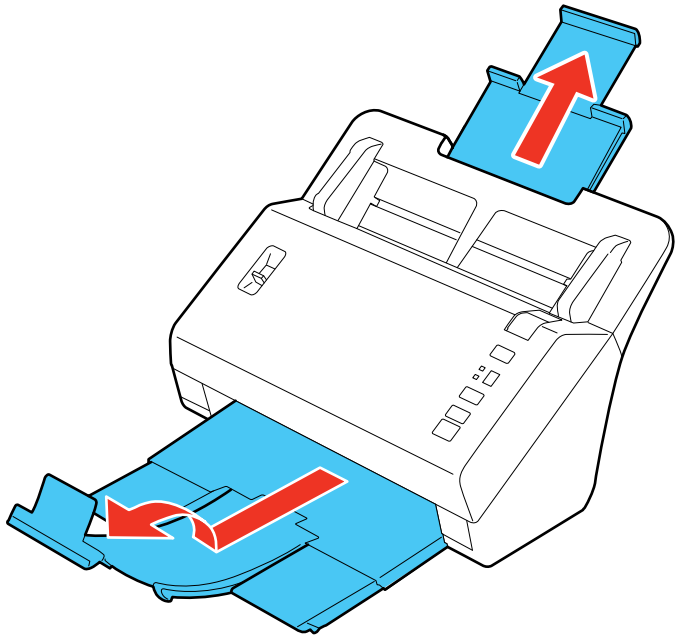

Note: If you are scanning originals longer than Letter (8.5 × 11 inches [216 × 279 mm]) size, do not flip up the stopper.

2. Slide the input tray edge guides all the way out.

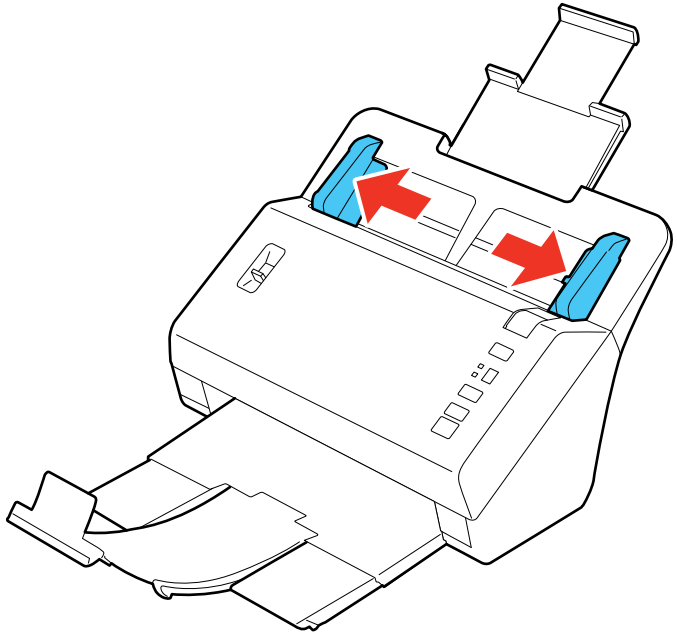

3. Check to make sure that the page separation lever is in the position shown here.

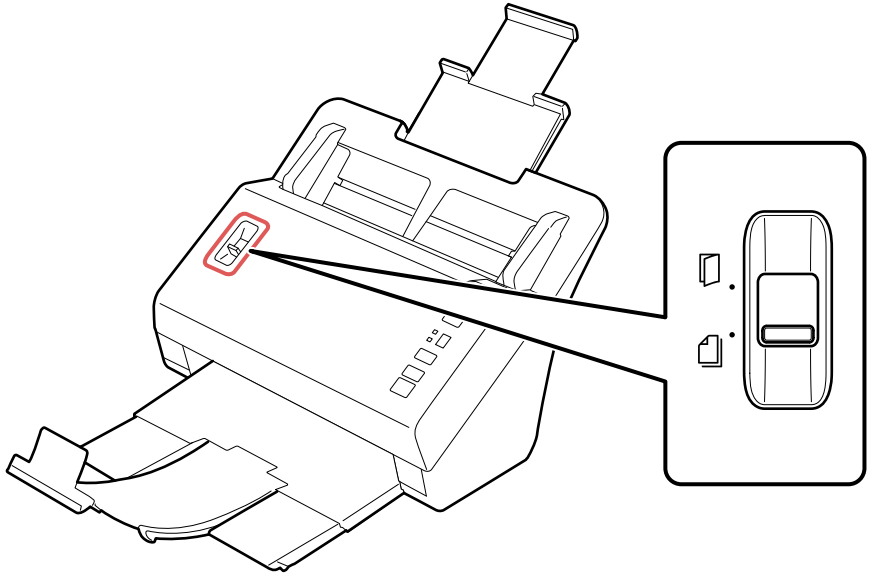

Note: To prevent paper jams, keep the lever in this position for most types of documents.

4. Load the originals in the input tray in descending order of paper size with the largest at the back and the smallest at the front.

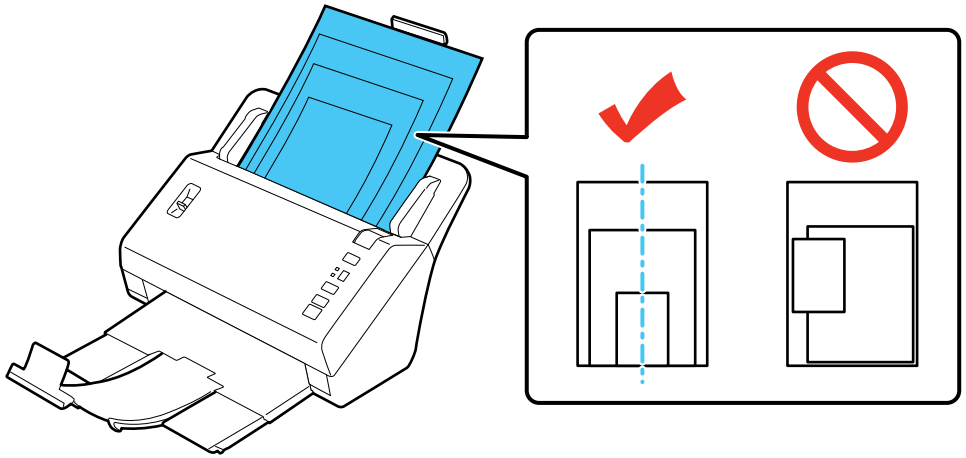

Note: If you are loading a paper business card, load it horizontally.

5. Slide the edge guides against the edges of the widest document.

Parent topic: Loading Originals in the Input Tray

Original Document Loading Capacity

You can load original documents that meet these specifications in your scanner.

Paper size	Paper weight	Paper type	Loading capacity
Letter (8.5 × 11 inches [216 × 279 mm])	10 to 56 lb (40 to 210 g/m²)	Plain paper Fine paper Recycled paper	10 lb (40 g/m²): 100 sheets 21 lb (80 g/m²): 80 sheets 56 lb (210 g/m²): 30 sheets Loading capacity may vary depending on the paper type.
A4 (8.3 × 11.7 inches [210 × 297 mm])			
Legal (8.5 × 14 inches [216 × 357 mm])			
A5 (5.8 × 8.2 inches [148 × 210 mm])			
A6 (4.1 × 5.8 inches [105 × 148 mm])			
B5 (7.2 × 10.1 inches [182 × 257 mm])			
Business cards	Up to 56 lb (210 g/m²)	Paper business cards	30 cards loaded horizontally

Note: You can load original documents of different sizes, up to this size: Letter (8.5 × 11 inches [216 × 279 mm]). However, do not load different-sized large or thick originals, or valuable original documents or artwork.

Caution: Do not load the following types of originals in the scanner, or they may be damaged or may damage the scanner:

- Thermal paper
- Coated paper
- Originals with uneven surfaces, such as embossed documents
- Photos
- Originals with wet ink
- Ripped, curled, or wrinkled originals
- Originals containing staples or paper clips
- Originals with holes, other than standard hole-punched originals
- Originals that are bound
- Originals with carbon paper backing

- Transparencies
- Glossy originals
- Carbon-less paper
- Perforated originals
- Originals with labels or stickers

Parent topic: Loading Originals in the Input Tray

Loading Plastic Cards in the Input Tray

You can load plastic cards that meet the card specifications in the input tray.

1. Pull up the input tray extension, extend the output tray, and flip up the stopper.

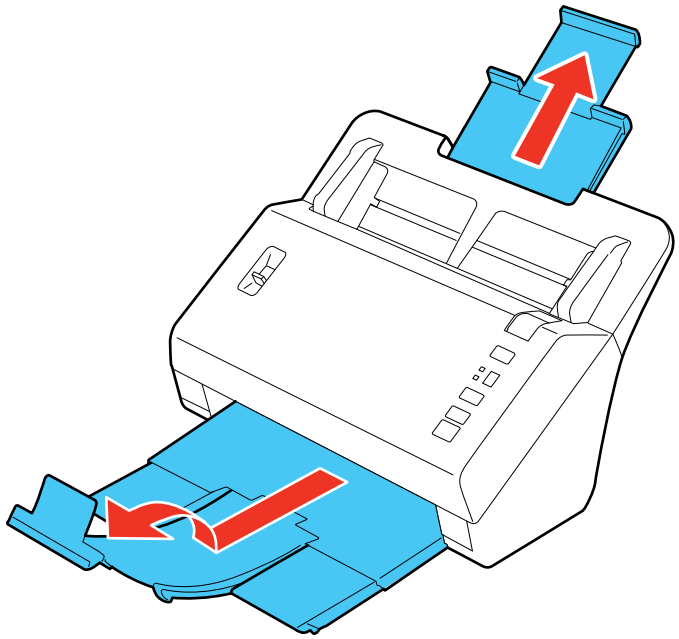

Note: If you are scanning originals longer than Letter (8.5 × 11 inches [216 × 279 mm]) size, do not flip up the stopper.

2. Slide the input tray edge guides all the way out.

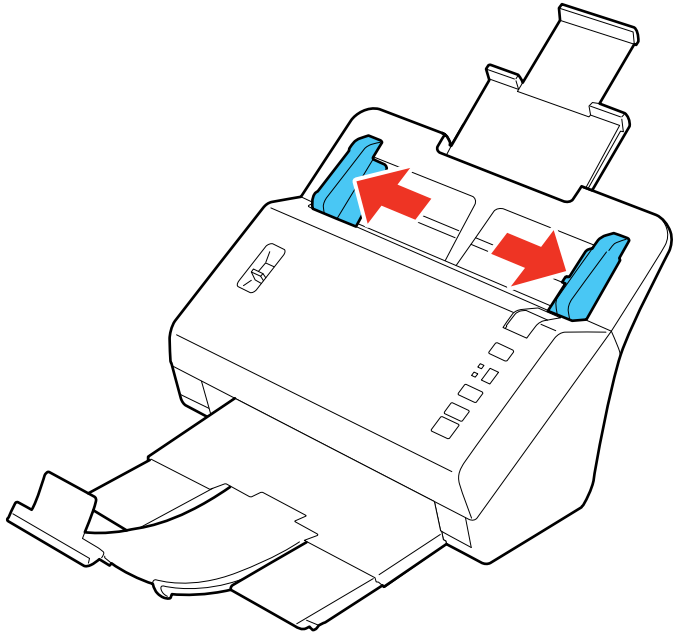

3. Load up to three standard plastic cards horizontally in the input tray as shown, sliding them in until they meet resistance. Make sure the printed side is face down with the top edge first.

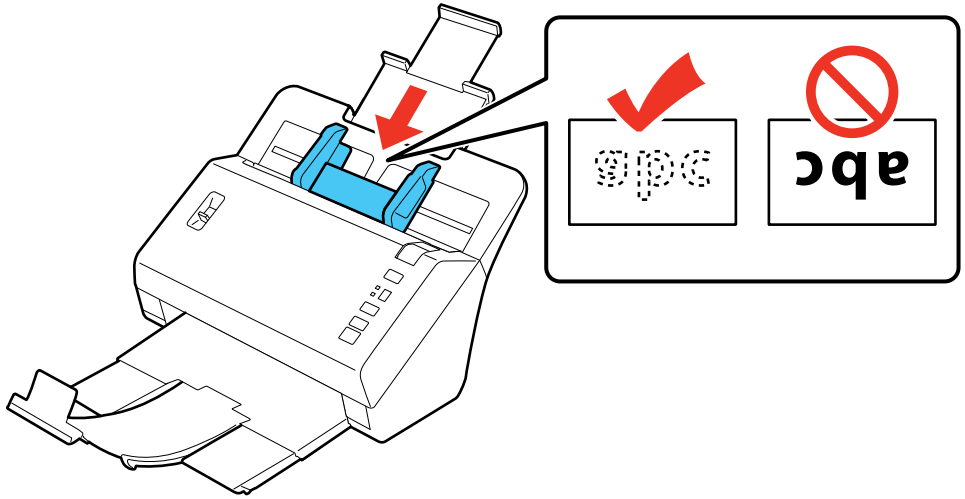

Note: You can load only a single embossed plastic card. Do not load plastic cards vertically.

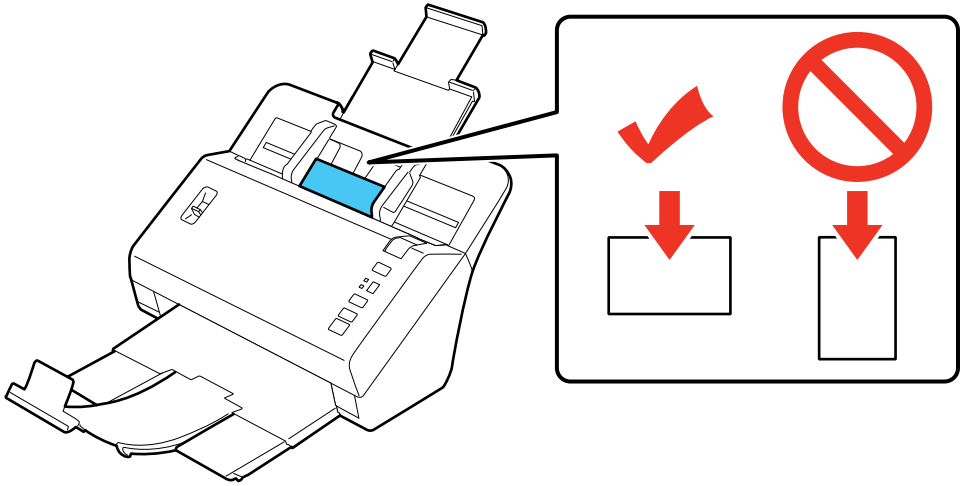

4. Slide the edge guides against the edges of the plastic card.

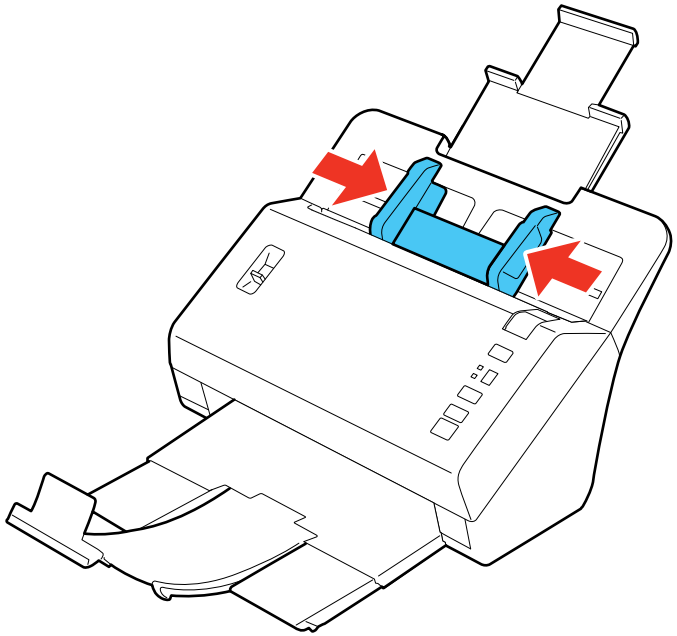

5. Set the page separation lever to the position shown here.

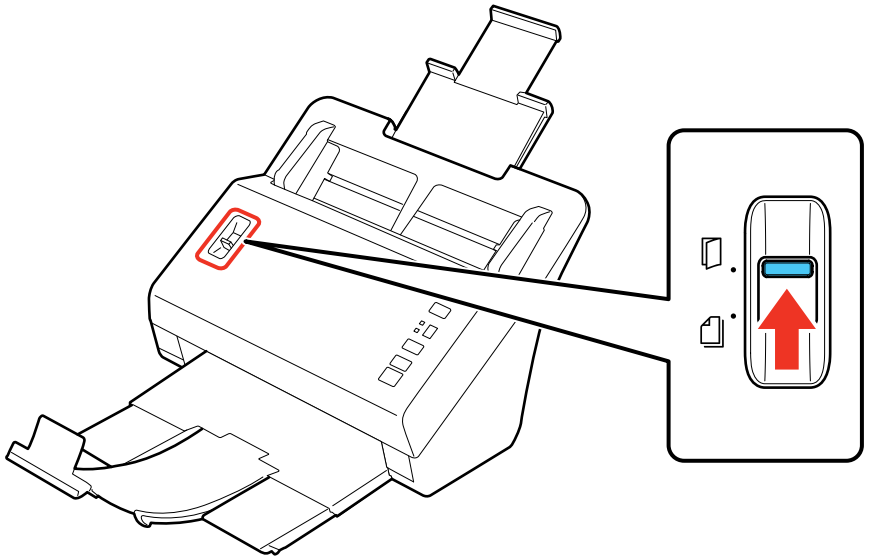

Note: To prevent paper jams, make sure to set the separation lever back to its original position when scanning standard single- or multi- page documents.

Card Loading Capacity

Parent topic: Loading Originals

Card Loading Capacity

You can load original cards that meet these specifications in your scanner.

Type	Plastic cards, including embossed cards (ISO7810 compliant)
Size	2.1 × 3.3 inches (56 × 85.6 mm)
Thickness	Up to 0.06 inch (1.5 mm) thick, including any embossing
Loading capacity	Standard cards: 3
	Embossed cards: 1
Loading direction	Horizontal

Note: Plastic cards with glossy surfaces may not scan properly.

Parent topic: Loading Plastic Cards in the Input Tray

Loading Special Documents

You can load a single envelope or large, thick, or folded original in the input tray. Make sure the original meets the specifications for special originals before loading it.

1. Pull up the input tray extension, extend the output tray, and flip up the stopper.

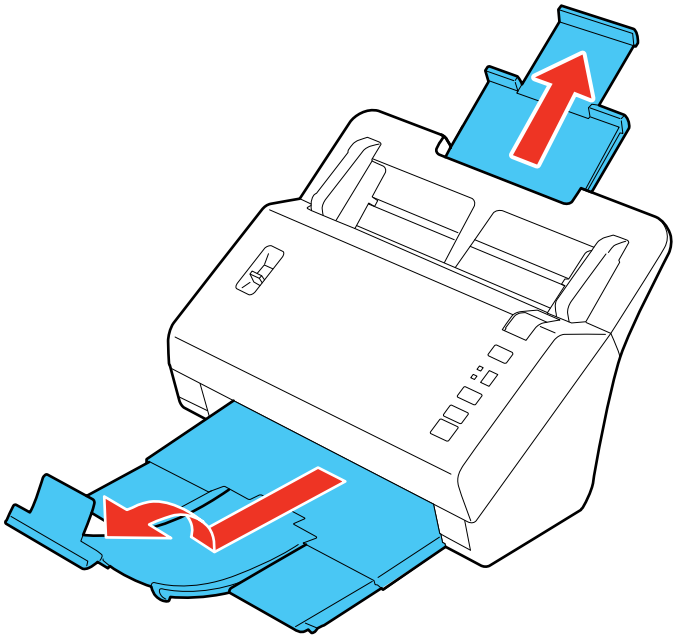

Note: If you are scanning originals longer than Letter (8.5 × 11 inches [216 × 279 mm]) size, do not flip up the stopper.

2. Slide the input tray edge guides all the way out.

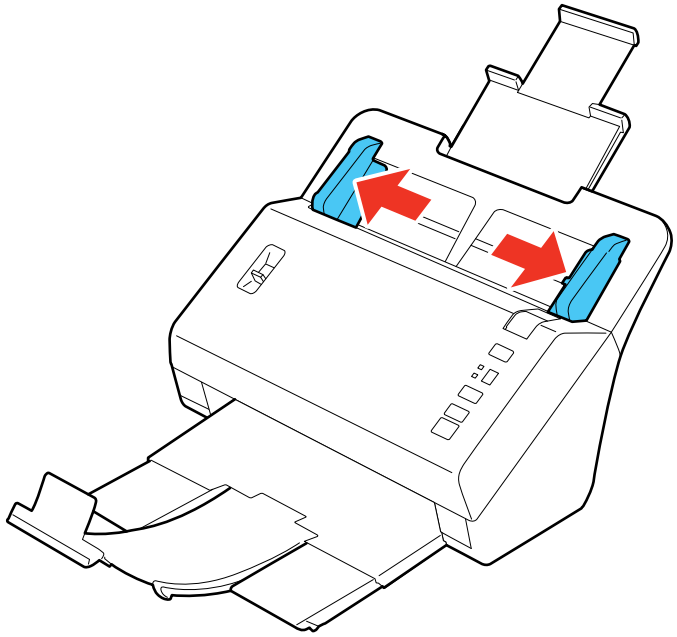

3. Do one of the following to load your original:
   - Load a large or thick original or an envelope in the input tray as shown. Make sure the printed side is facedown with the top edge first.

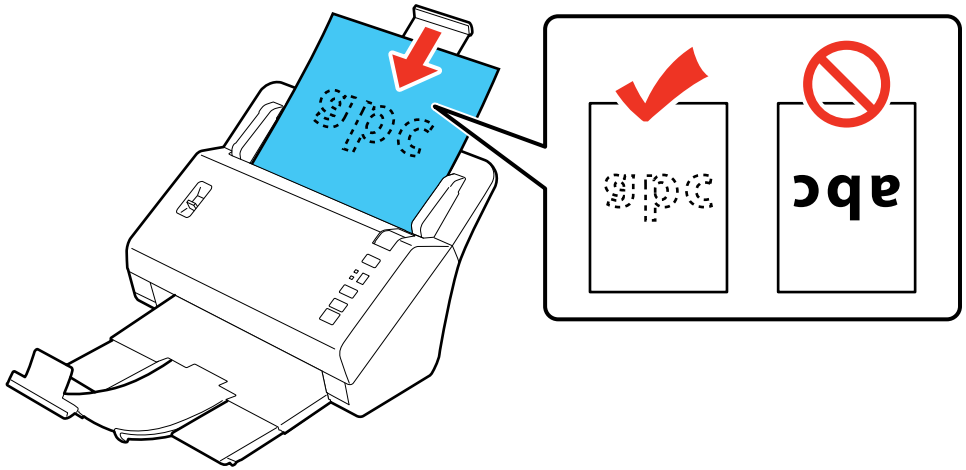

- For a folded original, fold and load the original as shown.

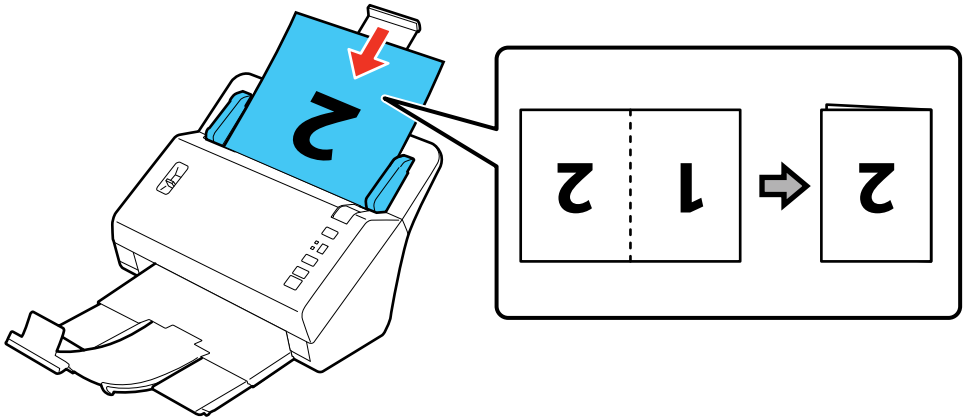

Caution: Do not load the document with the open side facing down.

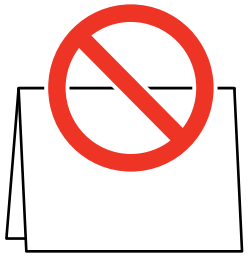

- For a photo or an irregularly-shaped original, use an optional carrier sheet to load the document. Do the following to load the document into the carrier sheet:
  - If the original is smaller than the carrier sheet, insert it in the center of the sheet with the printed side facedown and the top facing the arrow on the sheet.

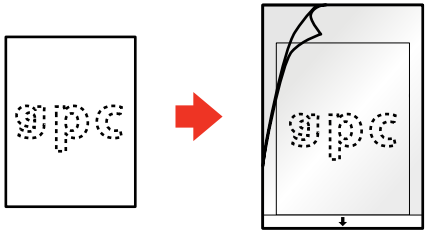

  - If the original is larger than the carrier sheet, fold it in half with the sides to be scanned facing out. Position the right side of the original at the front of the sheet with the top facing the arrow on the sheet.

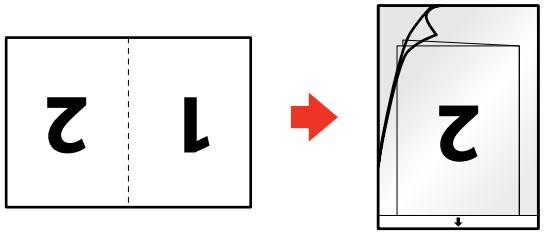

4. Slide the original into the scanner until it meets resistance.

5. Slide the edge guides against the edges of the sheet.

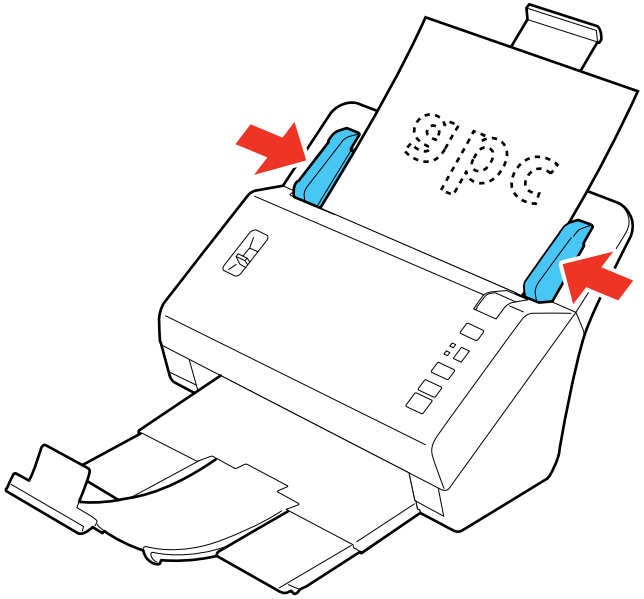

6. Set the page separation lever to the position shown here.

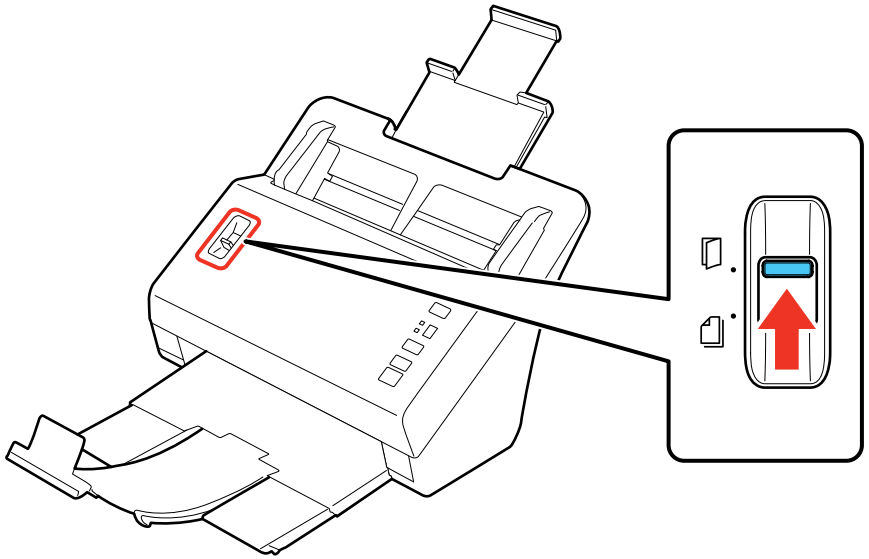

Note: To prevent paper jams, make sure to set the separation lever back to its original position when scanning standard single- or multi- page documents.

Large or Thick Original Loading Capacity

Parent topic: Loading Originals

Related references

User Replaceable Epson Scanner Parts

Page Separation Lever

Large or Thick Original Loading Capacity

You can load large, thick, or folded originals, or envelopes, that meet these specifications in your scanner.

Note: You can load only one large, thick, or folded original, or envelope at a time.

Paper type	Paper size	Paper weight
Plain paper, fine paper, or recycled paper	Width: 2.0 to 8.5 inches (50.8 to 215.9 mm) Length: 2.0 to 120 inches (50.8 to 3048 mm)	10 to 56 lb (40 to 210 g/m²)
Folded plain paper, fine paper, or recycled paper	Unfolded minimum size: A6 (4.1 × 5.8 inches [105 × 148 mm]) Unfolded maximum size: A3 (11.7 × 16.5 inches [297 × 420 mm])	13 to 35 lb (50 to 130 g/m²)
Envelopes	Up to 0.015 inch (0.38 mm) thick	—
Irregularly shaped originals (load only in a carrier sheet)	Up to this size: A4 (8.3 × 11.7 inches [210 × 297 mm])	13 to 35 lb (50 to 130 g/m²)

Parent topic: Loading Special Documents

Using the Network Interface Unit

See these sections to use the optional Epson Network Interface Unit to scan over a network.

Network Interface Unit Parts
Connecting the Network Interface Unit
Setting Up Network Scanning
Scanning to Network Computers from the Network Interface Unit

Network Interface Unit Parts

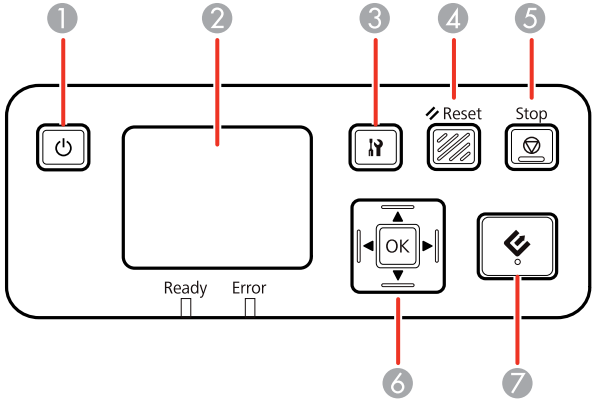

1 The ⏻ power button (turns the unit on and off)
2 The LCD screen (displays status, operations, and error messages)
3 The settings button (selects product settings, network settings, and maintenance options)
4 The **Reset** button (returns the LCD to the default screen)
5 The **Stop** button (cancels scanning)
6 The **OK** button and arrows (use the arrows to highlight an option and the **OK** button to select it)
7 The start button (starts scanning when networking is enabled)

Parent topic: Using the Network Interface Unit

Connecting the Network Interface Unit

See the documentation that came with the optional Epson Network Interface Unit for instructions on connecting it to your scanner.

Parent topic: Using the Network Interface Unit

Setting Up Network Scanning

You can set up network scanning to your scanner through the optional Epson Network Interface Unit. First connect the unit to your scanner and verify that they are working properly. Then follow the instructions here to set up computers for network scanning using the Epson Scan Settings utility.

Note: Make a note of the IP address or host name of the Network Interface Unit so you can enter it in these steps.

1. Do one of the following to start Epson Scan Settings:
   - **Windows 8.x**: Navigate to the **Apps** screen and select **EPSON Scan Settings**.
   - **Windows (other versions)**: Click or **Start** > **All Programs** or **Programs** > **EPSON** > **EPSON Scan** > **EPSON Scan Settings**.
2. Select your scanner from the **Select Scanner** list.
3. Select the **Network** setting and click the **Add** button.

   You see this screen:

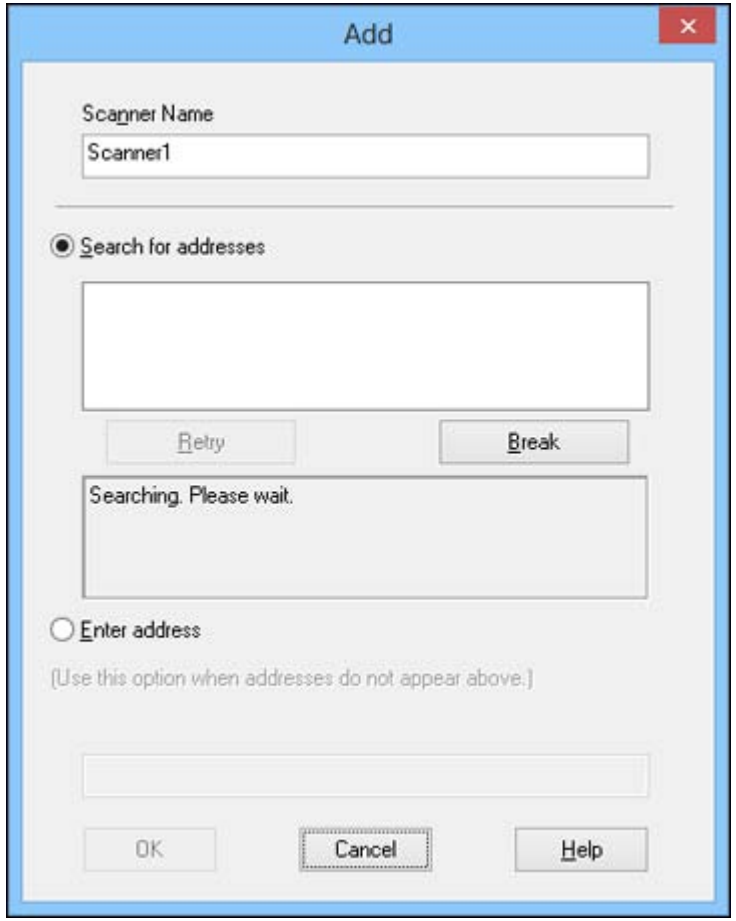

4. Do one of the following:
   - Under **Search for addresses**, select the IP address of your Network Interface Unit, and click **OK**.
   - Select the **Enter address** setting and type in the IP address or host name of your Network Interface Unit. Then click **OK**.
5. Click the **Test** button to check the connection.

   You see a confirmation message.
6. Click **OK** to save your settings and close Epson Scan Settings.

Parent topic: Using the Network Interface Unit

Scanning to Network Computers from the Network Interface Unit

You can scan to a network computer directly from the Network Interface Unit. You first set up a scan job in Document Capture Pro and then select the computer you want to send the scanned file to.

1. Start a scan job using Document Capture Pro.
2. Press the **OK** button on the Network Interface Unit.
3. On the LCD screen of the Network Interface Unit, select the computer you want to send the scanned file to and press the **OK** button.

   Note: If and your scanner is part of a workgroup, make sure the computer is part of the same workgroup or it will not show up on the LCD screen.

4. If you set up a password in Document Capture Pro, enter the password at the prompt.
5. Select a scan job and press the **OK** button.
6. Press the ⟐ start button on the scanner.

   Your original is scanned and the file is sent to the network computer you selected.

Parent topic: Using the Network Interface Unit

Related tasks

Scanning with Document Capture Pro

Scanning

You can scan original documents or photos and save them as digital files.

Starting a Scan from a Scanner Button
Scanning with Document Capture Pro
Scanning with Epson Scan
Scanning Special Projects

Starting a Scan from a Scanner Button

You can scan using a button on your scanner. This automatically starts the scanning program you have assigned to the button.

Your product automatically selects suitable default scan settings, but you can view or change them as necessary.

1. Make sure you installed the scanner software and connected the scanner to your computer or network.
2. Load an original in your scanner.
3. If you have assigned multiple jobs to the ◇ start button in Document Capture Pro, press the **Job Select** button on the scanner until the numeric display on the scanner shows the number of the saved job. You can only select jobs 1 to 9 with the **Job Select** button.

   Note: If your scanner is connected through a network, the display shows and you cannot use the **Job Select** button to select a saved job.

4. Press the ◇ start button.

   The image is scanned and saved to the folder you have specified.

Adding and Assigning Scan Jobs

Parent topic: Scanning

Related tasks

Loading Originals in the Input Tray
Loading Plastic Cards in the Input Tray
Loading Special Documents

Adding and Assigning Scan Jobs

You can view, change, or add available default scan settings when you scan using the ⟐ start button. You do this by accessing the scan jobs in the Document Capture Pro program.

1. Start Document Capture Pro on a computer connected to the product.
2. Click the Manage Job icon from the toolbar at the top of the window.

   You see the Job Management window showing the current scan job list.
3. If you want to add a scan job, click **Add**, enter a name for the new job, select settings as necessary, and click **OK**.

   You can now use the new scan job when you scan with Document Capture Pro.

   Note: See the Help information in Document Capture Pro for details.
4. If you want to assign scan jobs to the ⟐ start button, click **Event Settings**.
5. Select the jobs that you want to assign to any of the pull-down menus, click **OK**, then click **OK** again.

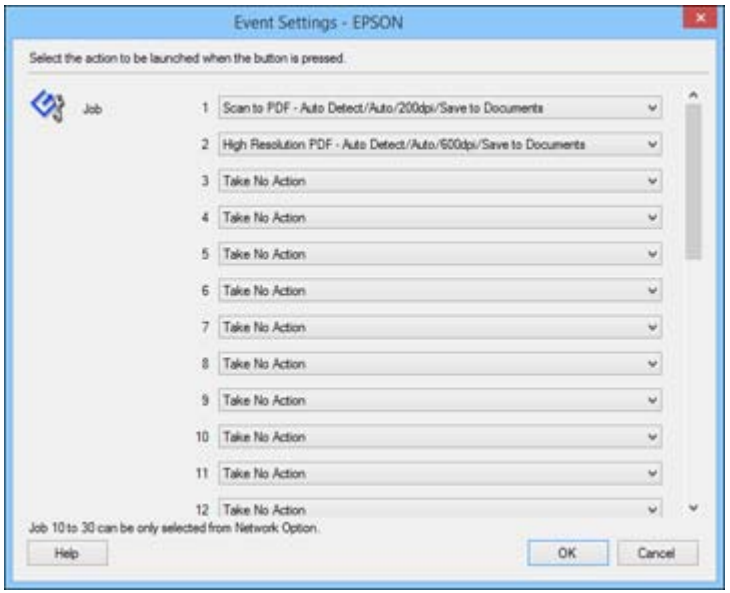

You can now use the added scan jobs when you scan from the start button. You can only select jobs 1 to 9 with the **Job Select** button on the scanner.

Note: If your scanner is connected through a network, the numeric display on the scanner shows and you cannot use the **Job Select** button to select a saved job.

Parent topic: Starting a Scan from a Scanner Button

Related tasks

Scanning with Document Capture Pro

Scanning with Document Capture Pro

When you scan with Document Capture Pro, the program automatically saves your scanned file on your computer in the folder you specify. You can select settings, preview, and change the scanned file settings as necessary.

1. Do one of the following to start Document Capture Pro:
   - **Windows 8.x**: Navigate to the **Apps** screen and select **Document Capture Pro**.
   - **Windows (other versions)**: Click or **Start**, and select **All Programs** or **Programs**. Select **EPSON Software**, then select **Document Capture Pro**.

   You see a window like this:

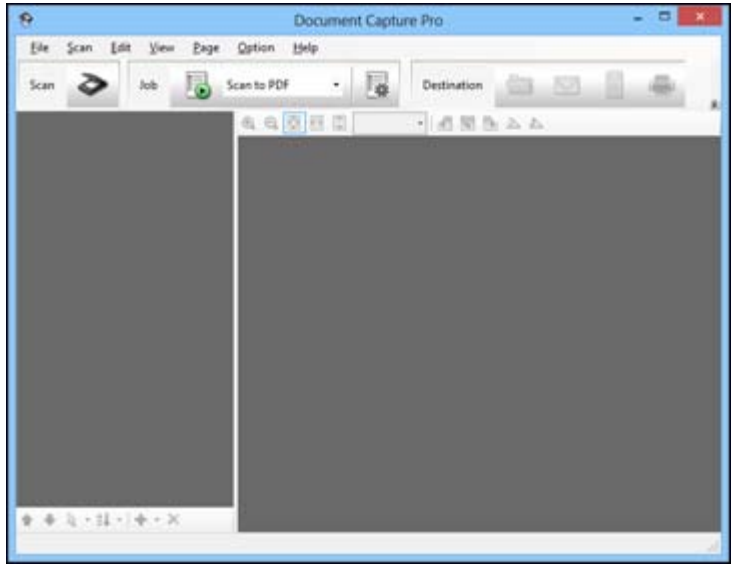

2. Click the **Scan** icon.

   You see a window like this:

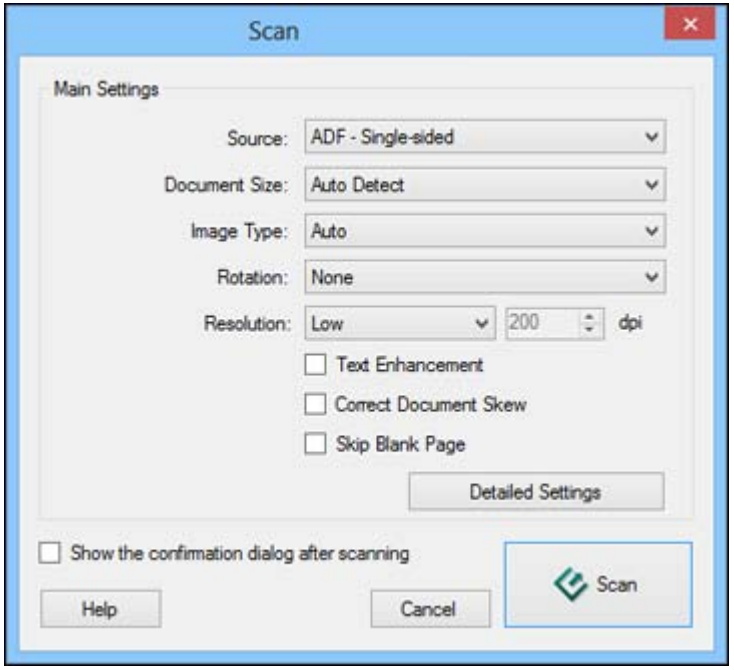

Note: If you want to use a scan job that you created instead, select it from the Job list in the Document Capture Pro window, click the Start Job button, and skip the rest of these steps.

3. Select any scan settings you want to use.

   Note: See the Help information in Document Capture Pro for details.

4. If you want to select detailed scan settings, click **Detailed Settings**. Select any scan settings you want to use and click **OK**.
5. Click **Scan**.

   You see a preview of your scan in the Document Capture Pro window.
6. Check the scanned images and edit them as necessary.

7. Click one of the Destination icons to choose where to save your scanned file. (If you cannot see all of the icons below, click the arrow next to the icons.)

Note: To sort the documents into separate files by detecting blank pages or barcodes in your scanned images, click **File Name Settings** and select **Apply job separation** in the Document Capture Pro Save As or Transfer Settings window.

8. Click **OK**, **Send**, or **Print** to save the scanned file.

Parent topic: Scanning

Related references

Available Image Adjustments

Related tasks

Adding and Assigning Scan Jobs

Scanning Multi-Page Originals as Separate Files

Scanning with Epson Scan

Epson Scan automatically saves your scanned file on your computer in the format and folder you specify. You can select settings, preview, and change the scanned file settings as necessary.

1. Do one of the following to start Epson Scan:
   - **Windows 8.x**: Navigate to the **Apps** screen and select **EPSON Scan**.
   - **Windows (other versions)**: Click or **Start**, and select **All Programs** or **Programs**. Select **EPSON**, then select **EPSON Scan**.

   You see a window like this:

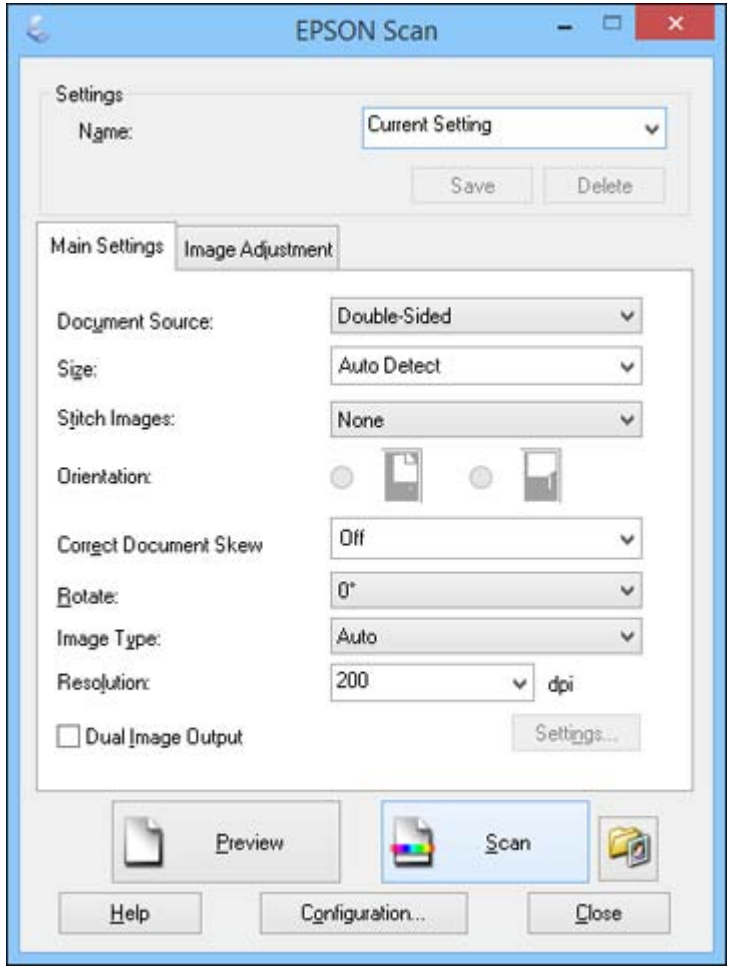

2. Select options for each of the scan settings on the screen.
3. If necessary, click the **Preview** button.

   Epson Scan previews your original and displays the result in a separate Preview window. The scanner also ejects the page.
4. Reload the page in the input tray.
5. Click the **Image Adjustment** tab and select any of the image adjustment settings you want to use. Before making adjustments, click the image or scan area in the Preview window.

6. Click **Scan**.

   You see the File Save Settings window.

7. Change any of the file save settings and click **OK**.

Epson Scan scans your original, and saves the file in the selected folder or opens it in your scanning program. If the file was saved directly to your computer, you see the file in Windows Explorer, where you can view and print the image.

Available Image Adjustments

Parent topic: Scanning

Available Image Adjustments

You can select these options from the Image Adjustments tab in Epson Scan.

Note: Not all adjustment settings may be available, depending on the Image Type setting.

Select the **Image Option** checkbox to access additional settings.

Unsharp Mask
Makes the edges of certain image areas clearer. Turn off this option to leave softer edges.

Descreening
Removes the ripple pattern that might appear in subtly shaded image areas, such as skin tones. This option improves results when scanning magazines or newspapers. (The results of descreening do not appear in the preview image, only in your scanned image.)

Text Enhancement
Sharpens the appearance of letters in text documents.

Auto Area Segmentation
Makes grayscale images clearer and text recognition more accurate by separating the text from the graphics.

Dropout
The scan will not pick up the color you select. This setting is only available if you select an Image Type of Grayscale or Black & White.

Color Enhance
Enhances the red, green, or blue shades in the scanned image.

Brightness
Adjusts the overall lightness and darkness of the scanned image.

Contrast
Adjusts the difference between the light and dark areas of the overall scanned image.

Parent topic: Scanning with Epson Scan

Scanning Special Projects

Your product's scanning software offers various options to help you quickly complete special scan projects.

Scanning Two Originals onto One Sheet (Stitching Images)
Scanning Multi-Page Originals as Separate Files
Scanning to a SharePoint Server or Cloud Service

Parent topic: Scanning

Scanning Two Originals onto One Sheet (Stitching Images)

You can scan both sides of a double-sided or folded original with Epson Scan's Stitch Images settings.

1. Load your original in the scanner.
2. Do one of the following to start Document Capture Pro:
   - **Windows 8.x**: Navigate to the **Apps** screen and select **Document Capture Pro**.
   - **Windows (other versions)**: Click or **Start**, and select **All Programs** or **Programs**. Select **EPSON Software**, then select **Document Capture Pro**.

   You see this window:

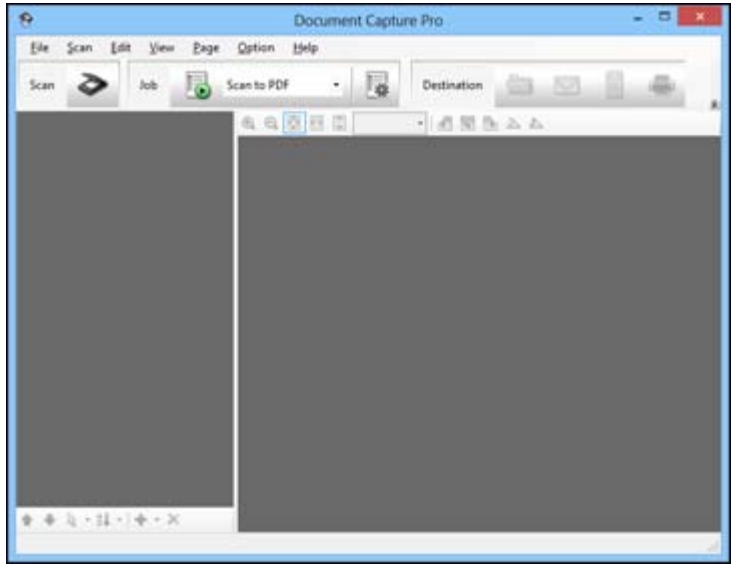

3. Click the **Scan** icon, then click **Detailed Settings**.
   You see an Epson Scan window like this:

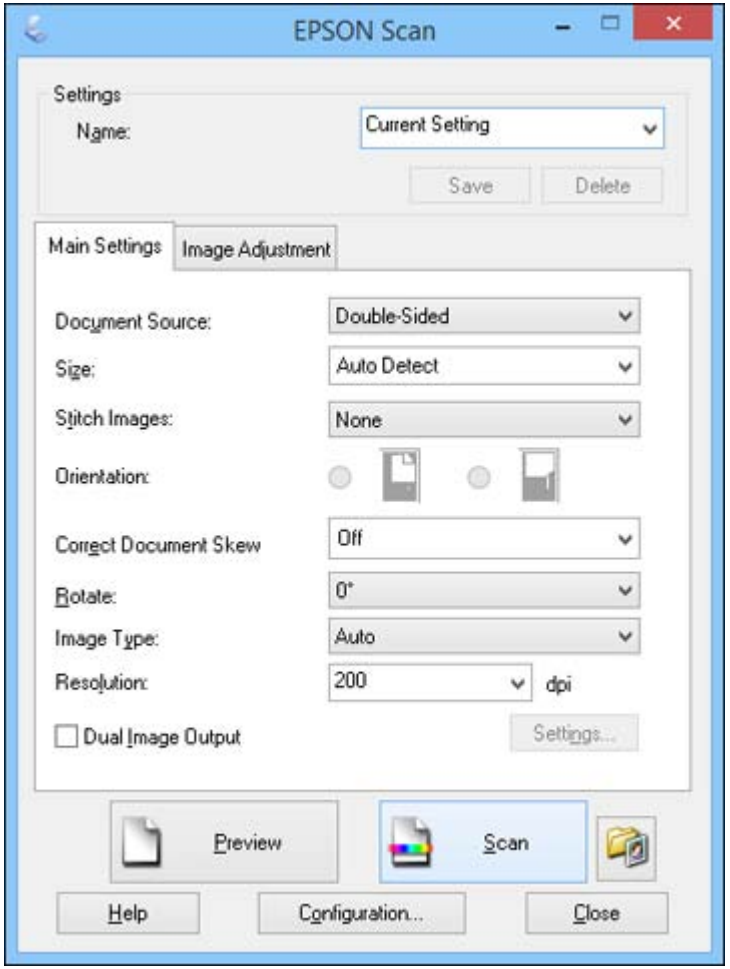

4. Select **Double-Sided** as the Document Source setting.
5. Select the original document size as the Size setting.
6. Select one of the following as the Stitch Images setting:
   - **Top&Bottom**: Places the scanned images one above the other.
   - **Left&Right**: Places the scanned images side by side.
7. Click **OK**.

8. Click **Scan**.

   The scanned image is displayed.

   Note: If the scanned images are not stitched together correctly, click **Configuration** on the Epson Scan window and select the **Binding Position (for Double-Sided Scanning)** setting on the Document tab.

Parent topic: Scanning Special Projects

Related tasks

Scanning with Document Capture Pro

Scanning Multi-Page Originals as Separate Files

You can use Document Capture Pro to scan multi-page originals as separate scanned files. You indicate where you want the new scanned files to start by inserting a blank page or barcode between the pages of your original.

1. Load a multi-page original with blank pages or barcodes inserted where you want to start a new scanned file.
2. Do one of the following to start Document Capture Pro:
   - **Windows 8.x**: Navigate to the **Apps** screen and select **Document Capture Pro**.
   - **Windows (other versions)**: Click or **Start**, and select **All Programs** or **Programs**. Select **EPSON Software**, then select **Document Capture Pro**.

   You see this window:

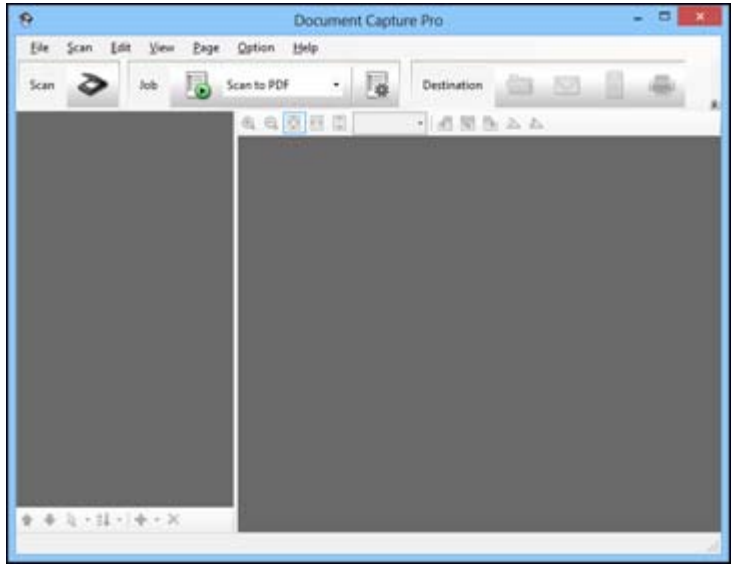

3. Click the **Scan** icon.
4. Select any displayed scan settings you want to use.

   Note: See the Help information in Document Capture Pro for details.

5. Click **Scan**.

   You see a preview of your scan in the Document Capture Pro window.
6. Open the **File** menu and select **Batch Save**.
7. Click **File Save Settings**.
8. Select **Apply job separation** and click **Separation Settings**.
9. Select the method you used to separate the originals, select a folder name specification and click **OK**.
10. Select any additional settings from the File Name Settings dialog and click **OK**.
11. Select any additional settings from the Batch Save dialog and click **OK**.

    Your originals are saved into separate files and folders as specified by your settings.

Parent topic: Scanning Special Projects

Related tasks

Scanning with Document Capture Pro

Scanning to a SharePoint Server or Cloud Service

You can use Document Capture Pro to upload scanned images to a SharePoint server or a cloud service.

1. Place your original in the scanner.
2. Do one of the following to start Document Capture Pro :
   - **Windows 8.x**: Navigate to the **Apps** screen and select **Document Capture Pro**.
   - **Windows (other versions)**: Click or **Start**, and select **All Programs** or **Programs**. Select **EPSON Software**, then select **Document Capture Pro**.

   You see a window like this:

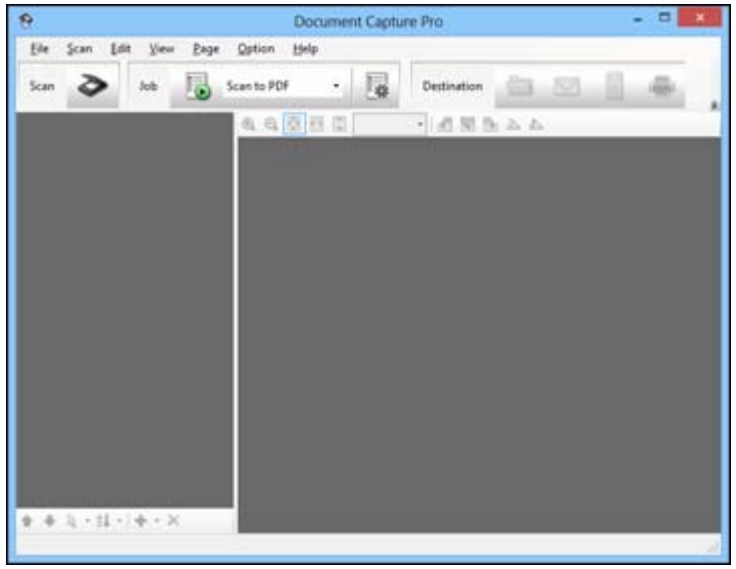

3. Click the **Scan** icon.
4. Select any displayed scan settings you want to use.

   Note: See the Help information in Document Capture Pro for details.

5. Click **Scan**.

   You see a preview of your scan in the Document Capture Pro window.

6. Click one of the cloud service Destination icons to choose where to save your scanned file. (If you cannot see all of the icons below, click the arrow next to the icons.)

   - Web Folder (WebDAV)
   - Microsoft SharePoint server
   - Evernote
   - Google Docs
   - SugarSync

   You see the Transfer Settings window.

7. Enter any required information to set up the destination. If you have previously created a saved setting for the destination, select it from the drop-down list.

8. Adjust any save settings, then click **OK**, **Send**, or **Print**, depending on the destination. .

   Your originals are scanned and uploaded to the indicated server.

Parent topic: Scanning Special Projects

Related tasks

Scanning with Document Capture Pro

Cleaning and Transporting Your Scanner

See these sections if you need to clean or transport your scanner.

Cleaning Your Scanner
Cleaning Inside Your Scanner
Checking the Scanner Roller Counter
Replacing the Scanner Rollers
Transporting Your Scanner

Cleaning Your Scanner

To keep your product working at its best, you should clean it several times a year.

Caution: Do not use a hard brush, alcohol, or paint thinner to clean the product or you may damage it. Do not use oil or other lubricants inside the product or let water get inside it.

1. Turn off the scanner and unplug the AC adapter.
2. Disconnect any connected cables.
3. Clean the outer case with a soft, dry cloth. Do not use liquid or chemical cleansers.

   Note: If the outer case still requires additional cleaning, use a slightly damp cloth to wipe the outer case. Then wipe the case with a soft, dry cloth.

Parent topic: Cleaning and Transporting Your Scanner

Cleaning Inside Your Scanner

Clean your scanner regularly to make sure that no dust builds up on the glass scanning surfaces. Dust can cause spots or lines in your scanned images.

Caution: Do not use a hard brush, alcohol, or paint thinner to clean the product or you may damage it. Do not use oil or other lubricants inside the product or let water get inside it.

1. Turn off the scanner and unplug the AC adapter.
2. Disconnect any connected cables.

3. Pull down on the cover open lever and open the scanner cover.

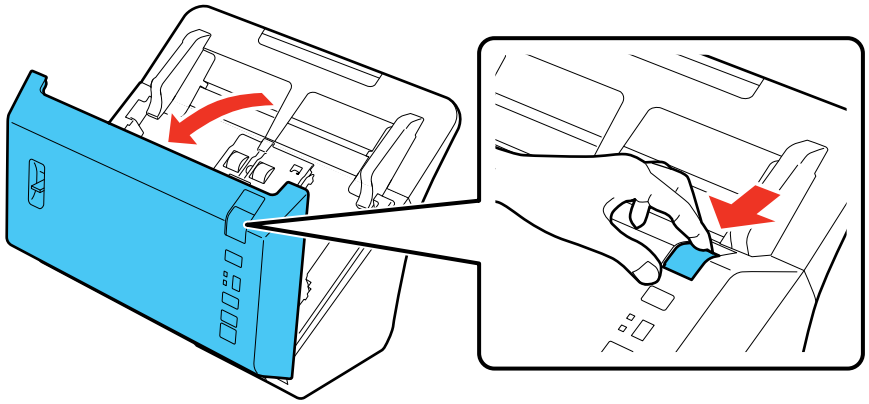

4. Use a soft, dry cloth to wipe off any dust or dirt on the rollers inside the scanner cover.

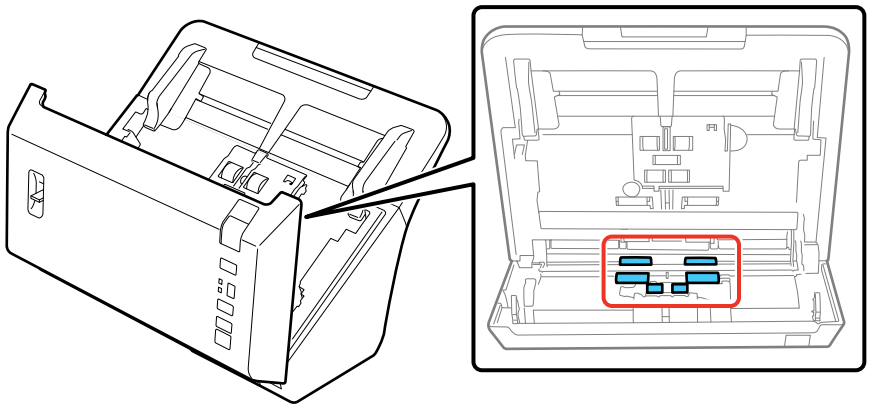

5. Wipe off any dust or dirt on the pickup rollers.

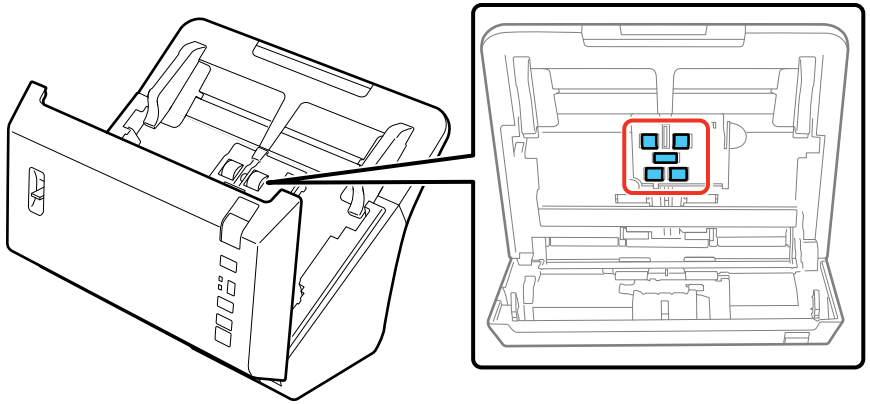

6. Plug in the AC adapter and press the ⏻ power button to turn on the scanner.
7. Hold down the ⟐ start button for at least two seconds, and press the ⟐ start button several times to rotate the rollers shown here. Wipe off any dust or dirt on the rollers as they rotate.

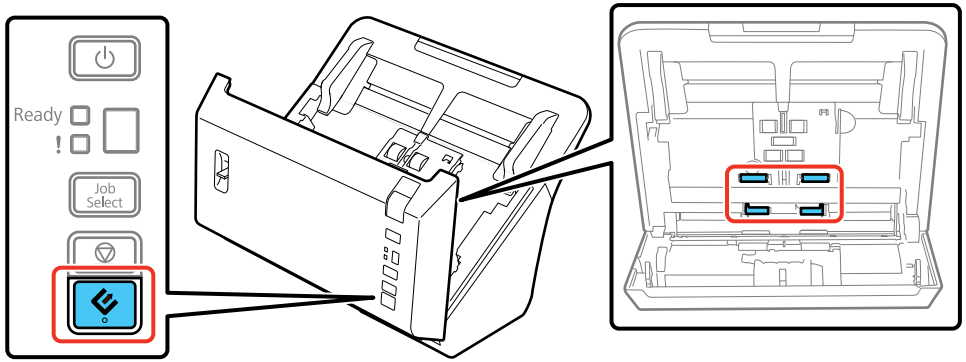

8. Turn off the scanner and unplug the AC adapter.

9. Wipe off any dust or dirt on the glass scanning surfaces using a soft, dry cloth. If the glass surface is stained with grease or some other hard-to-remove material, use a small amount of glass cleaner on a soft cloth to remove it. Wipe off all remaining liquid.

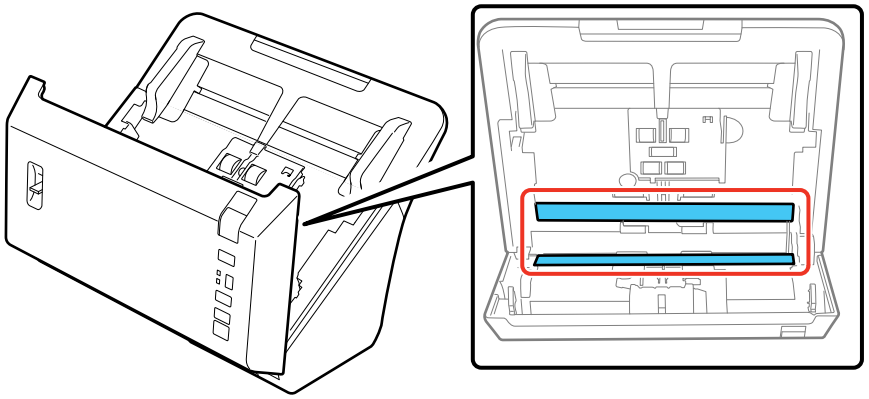

Caution: Do not spray glass cleaner directly on the scanning surfaces. Be careful not to place too much force on the glass.

10. Close the scanner cover.
11. Plug in the AC adapter.

Parent topic: Cleaning and Transporting Your Scanner

Checking the Scanner Roller Counter

Check the scanner roller counter to determine when your rollers need to be replaced. When you replace the scanner rollers, reset the scanner roller counter so you know when you may need to replace the rollers again.

1. Make sure the scanner is turned on and connected to your computer.
2. Do one of the following to open Epson Scan Settings:
   - **Windows 8.x**: Navigate to the **Apps** screen and select **EPSON Scan Settings**.
   - **Windows (other versions)**: Click or **Start** > **All Programs** or **Programs** > **EPSON** > **EPSON Scan** > **EPSON Scan Settings**.
3. Click **Maintenance**.

You see a screen like this:

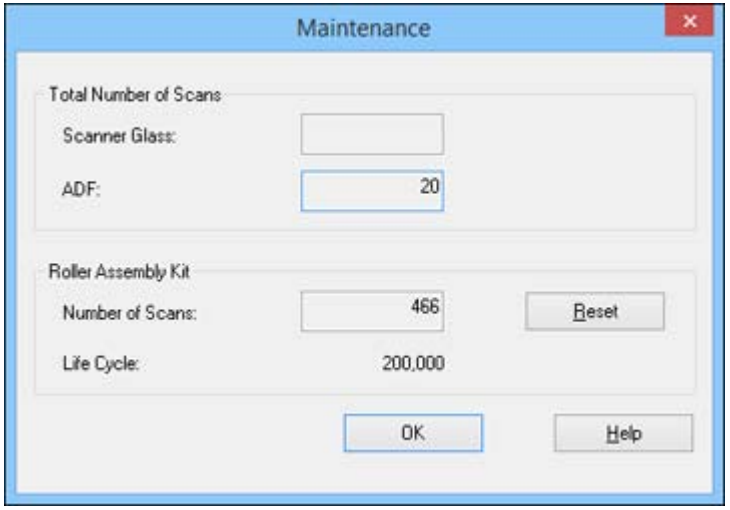

4. You can check the scanner roller counter by reading the number in the **Number of Scans** field. If the number of scans exceeds the **Life Cycle** of the rollers, it is time to replace the rollers.
5. Click **OK**.

Parent topic: Cleaning and Transporting Your Scanner

Replacing the Scanner Rollers

See these sections if you need to replace your pickup and separation rollers.

Replacing the Pickup Rollers
Replacing the Separation Rollers
Resetting the Scanner Roller Counter

Parent topic: Cleaning and Transporting Your Scanner

Related tasks
Checking the Scanner Roller Counter

Replacing the Pickup Rollers

Replace the scanner rollers after you have scanned 200,000 times. Check the scanner roller counter to see when you need to replace the rollers.

1. Turn off the scanner and unplug the AC adapter.
2. Disconnect any connected cables.
3. Pull down on the cover open lever and open the scanner cover.

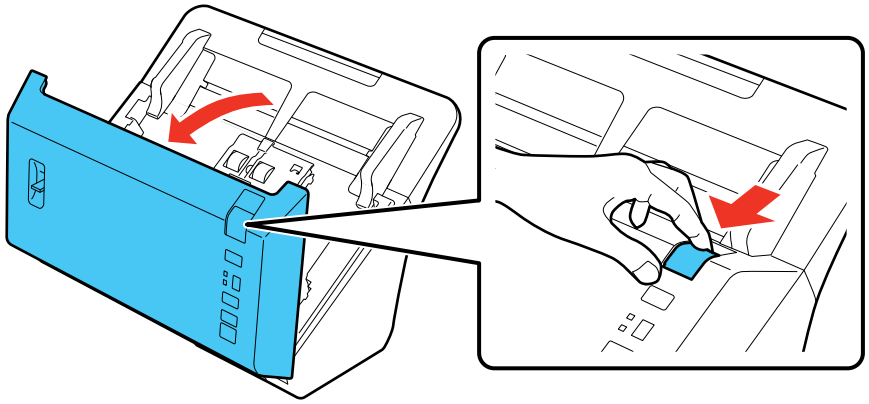

4. Squeeze the tab on the right side of the pickup roller cover and open the cover.

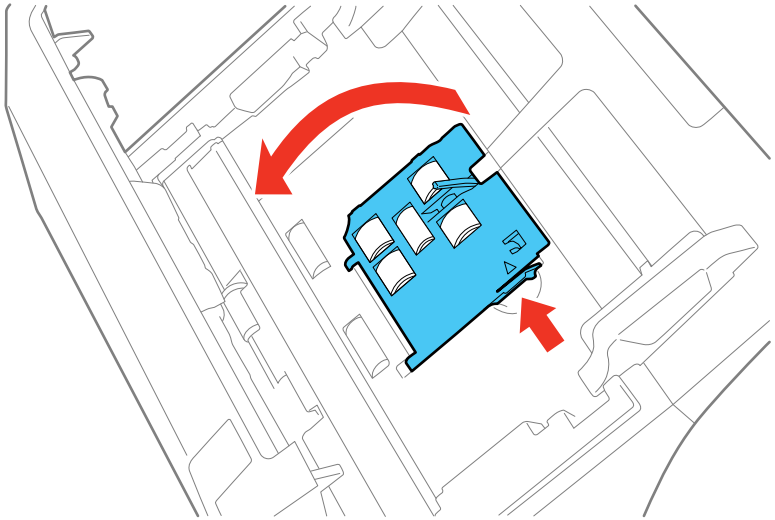

Caution: Do not place too much force on the arm inside the cover when replacing the pickup roller.

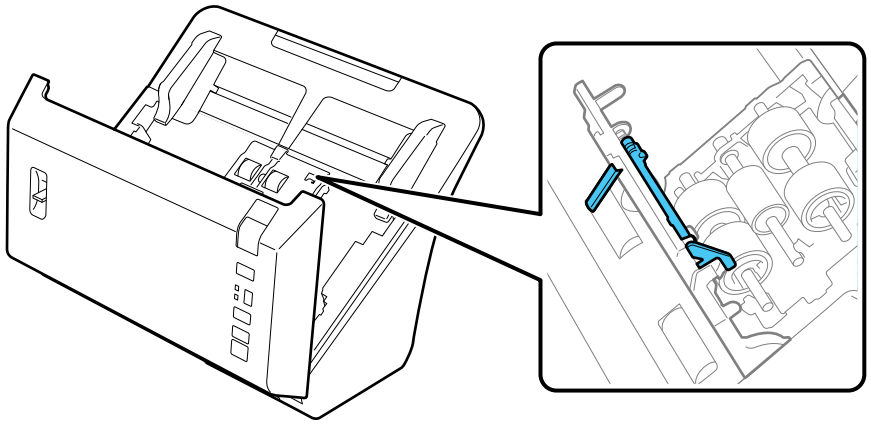

5. Slide the pickup rollers to the right and remove them.

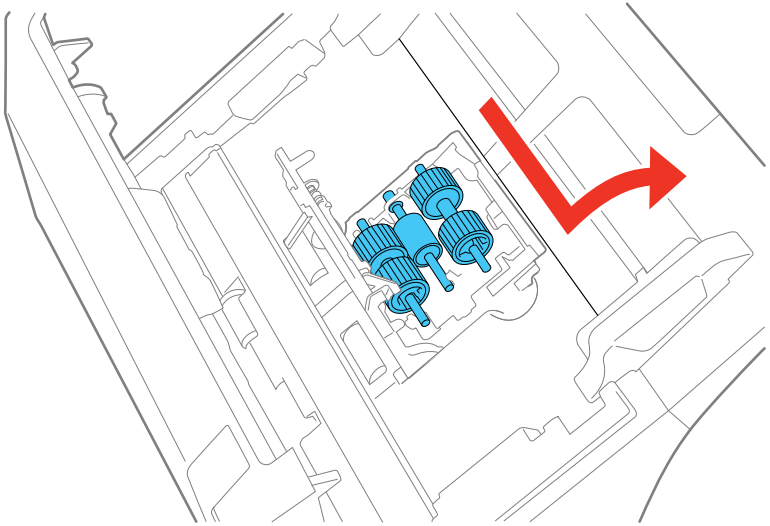

6. Remove the lower pickup roller from the spindle.

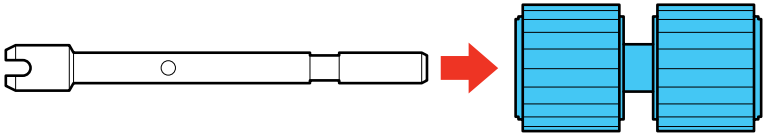

7. Place the new lower pickup roller on the spindle, rotate the roller, and slide it all the way on the spindle.

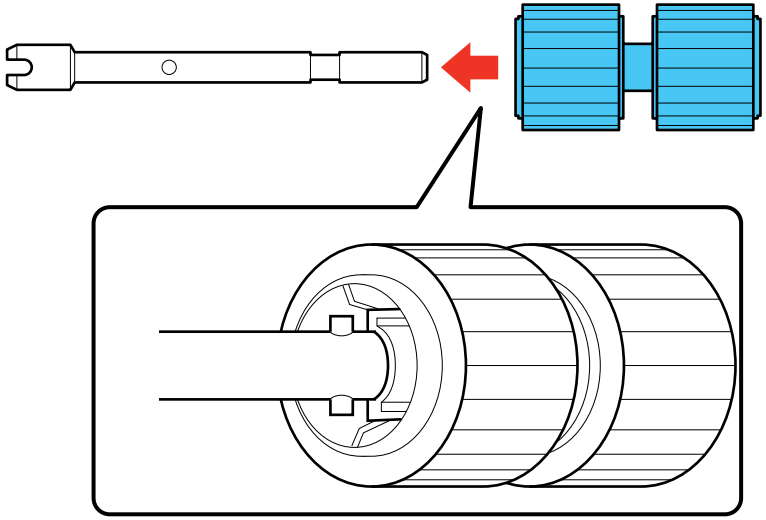

8. Install the lower pickup roller spindle by aligning the notches on the roller and sliding it to the left.

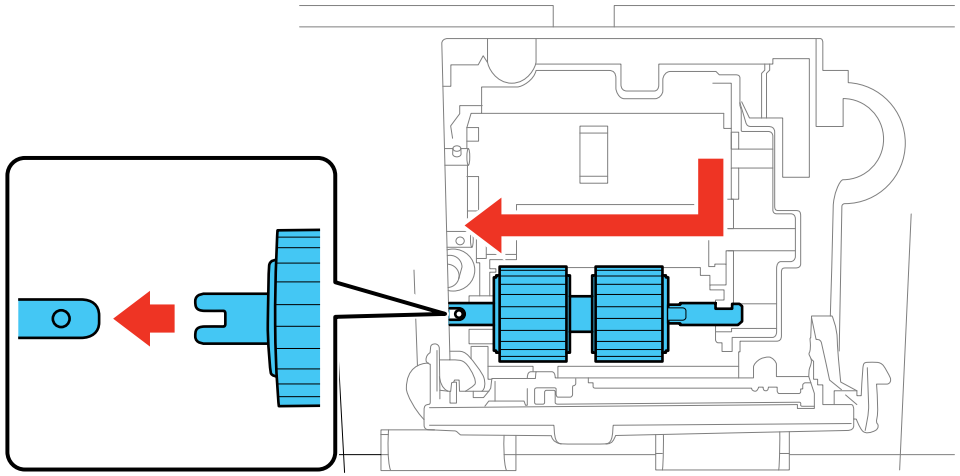

9. Remove the middle pickup roller from the spindle.

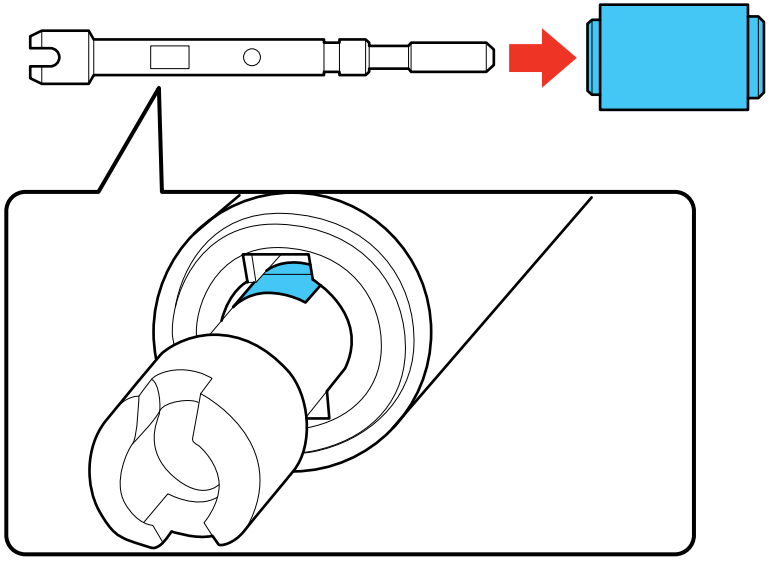

10. Place the new middle pickup roller on the spindle, rotate the roller to line up the notches, and slide it all the way on the spindle.

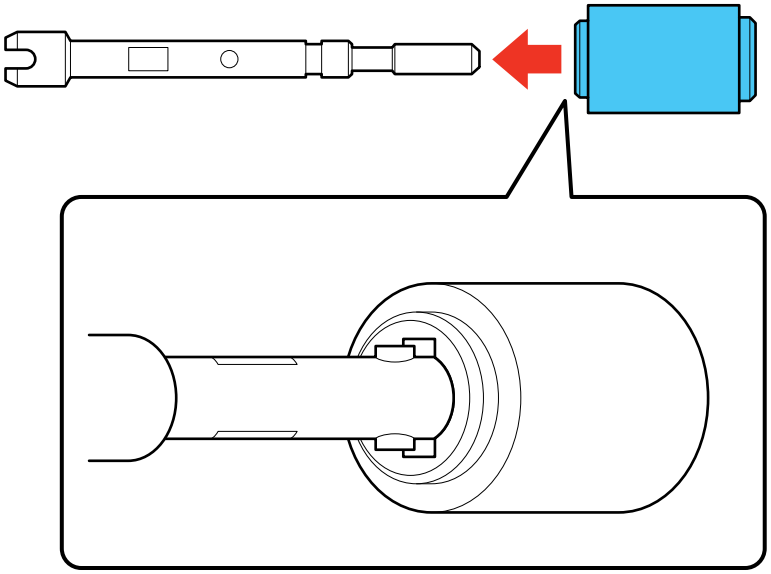

11. Install the middle pickup roller spindle by aligning the notches on the roller and sliding it to the left.

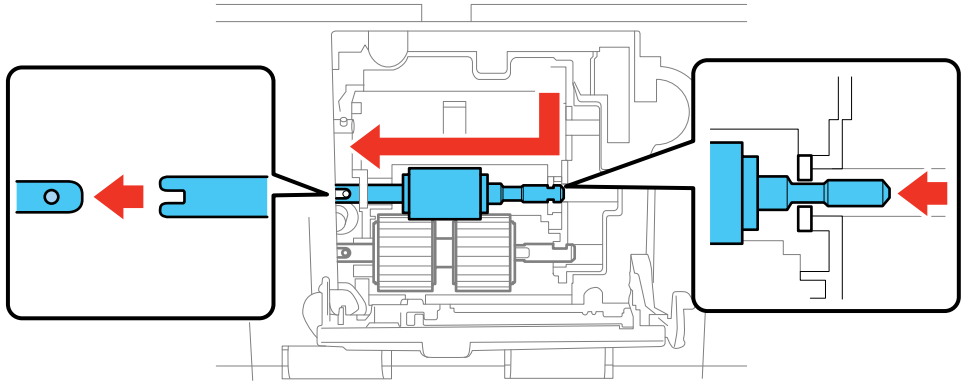

12. Remove the upper pickup roller from the spindle.

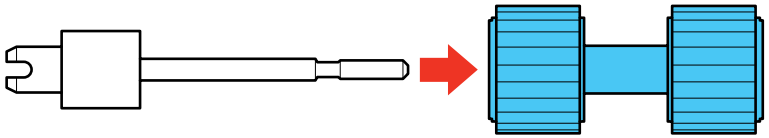

13. Place the new upper pickup roller on the spindle, rotate the roller to line up the notches, and slide it all the way on the spindle.

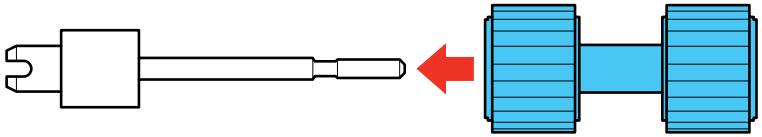

14. Install the upper pickup roller spindle by aligning the notches on the roller and sliding it to the left.

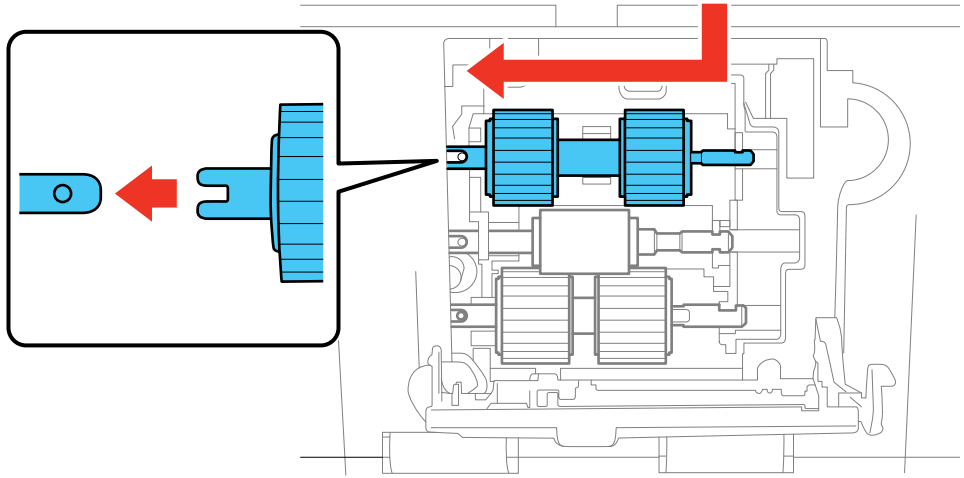

15. Close the pickup roller cover.

    Note: If you are not able to close the cover, the pickup rollers are not installed correctly. Make sure the rollers are all the way to the left, then try to close the cover. If you still cannot close the cover, remove the rollers and reinstall them, then try to close the cover again.

16. Replace the separation rollers.

Parent topic: Replacing the Scanner Rollers

Related tasks

Checking the Scanner Roller Counter

Replacing the Separation Rollers

Replace the scanner rollers after you have scanned 200,000 times. Check the scanner roller counter to see when you need to replace the rollers.

1. Turn off the scanner and unplug the AC adapter.
2. Disconnect any connected cables.
3. Pull down on the cover open lever and open the scanner cover.

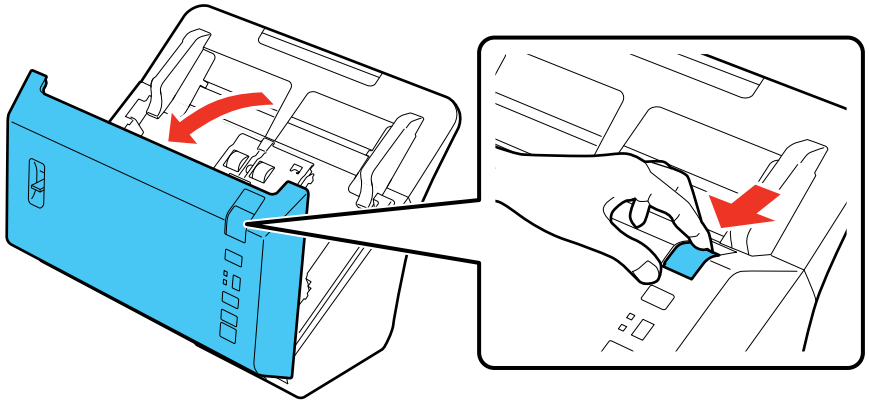

4. Press down on the separation roller cover latch inside the scanner cover and pull down the cover to open it.

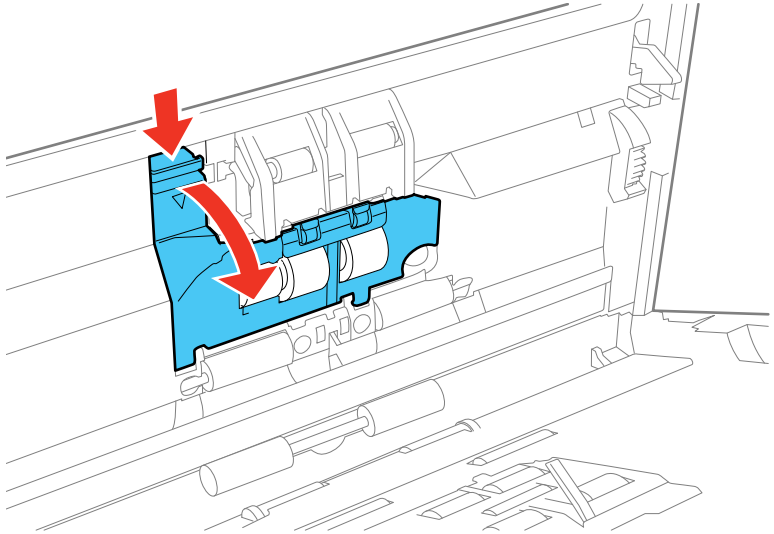

Caution: Be careful not to apply too much force when opening the cover.

5. Press in on the separation roller to release it, then slide the roller to the side and remove it.

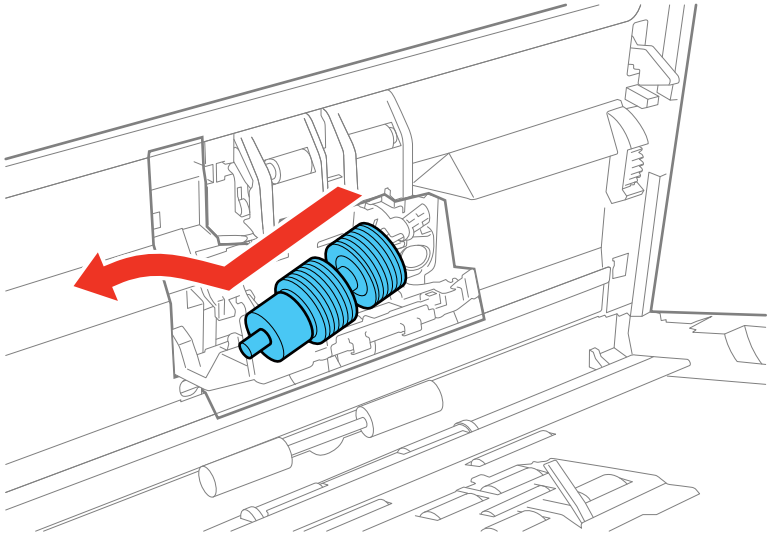

6. Remove the separation roller from the spindle.

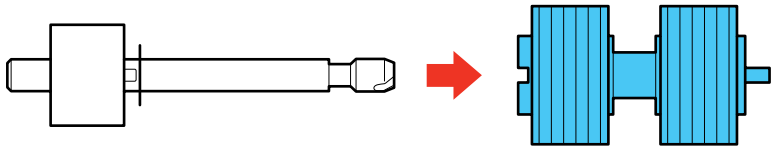

7. Slide the new separation roller onto the spindle as shown. Make sure that the notches on the roller and spindle align properly.

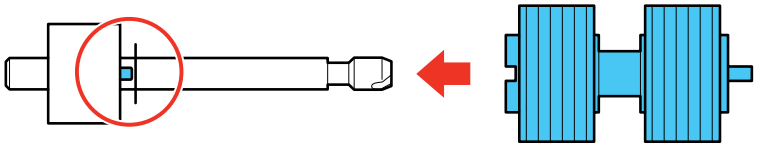

Note: Check that there are no gaps between the roller and spindle. You hear a click when the roller is firmly locked into place.

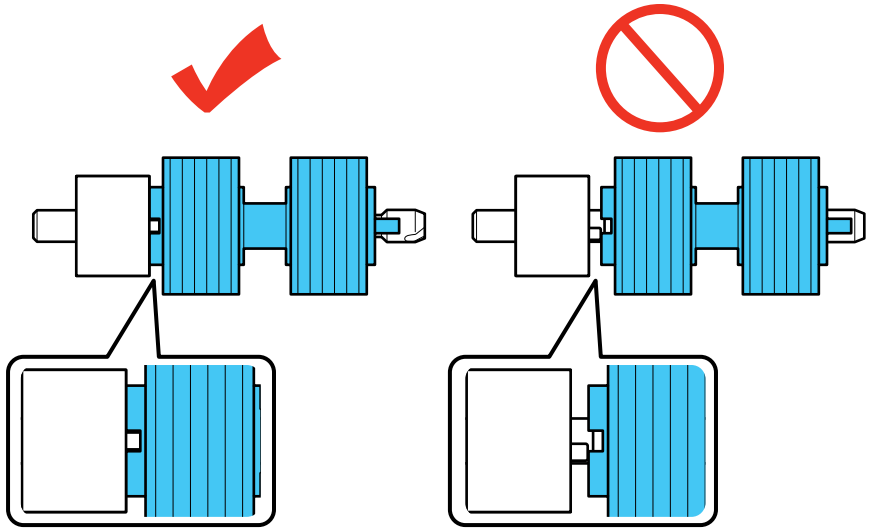

8. Align the notches on the spindle and the scanner, then slide the separation roller into the scanner and gently push it into place until it clicks.

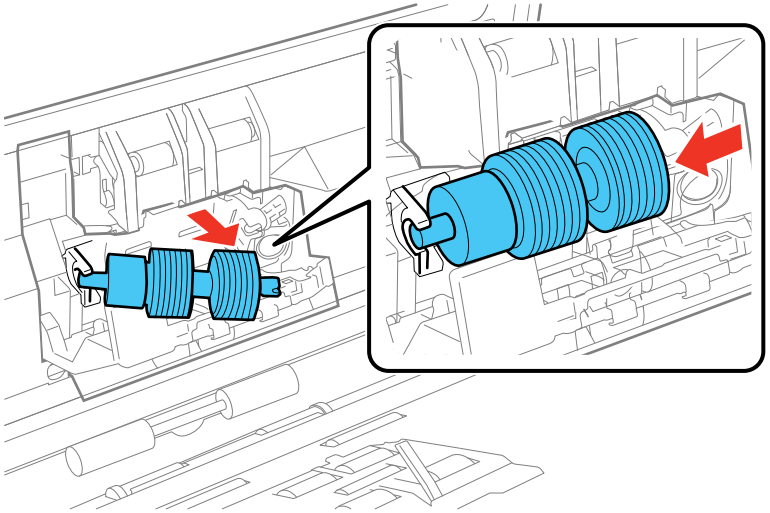

You hear a click when the roller is correctly aligned and locked into place.

9. While applying gentle pressure on the separation roller, close the separation roller cover.

   Note: If you are not able to close the cover, the roller is not installed correctly. First, make sure the roller is all the way to the right. Try to close the cover. If you are still unable to close the cover, remove the roller and reinstall it, then try to close the cover again.

10. Close the scanner cover.
11. Plug in the AC adapter and turn on the scanner..
12. Reset the roller counter after replacing both sets of rollers.

Parent topic: Replacing the Scanner Rollers

Related tasks

Checking the Scanner Roller Counter

Resetting the Scanner Roller Counter

When you replace the scanner rollers, reset the scanner roller counter so you know when you may need to replace the rollers again.

1. Make sure the scanner is turned on and connected to your computer.
2. Do one of the following to open Epson Scan Settings:
   - **Windows 8.x**: Navigate to the **Apps** screen and select **EPSON Scan Settings**.
   - **Windows (other versions)**: Click or **Start** > **All Programs** or **Programs** > **EPSON** > **EPSON Scan** > **EPSON Scan Settings**.
3. Click **Maintenance**.

   You see a screen like this:

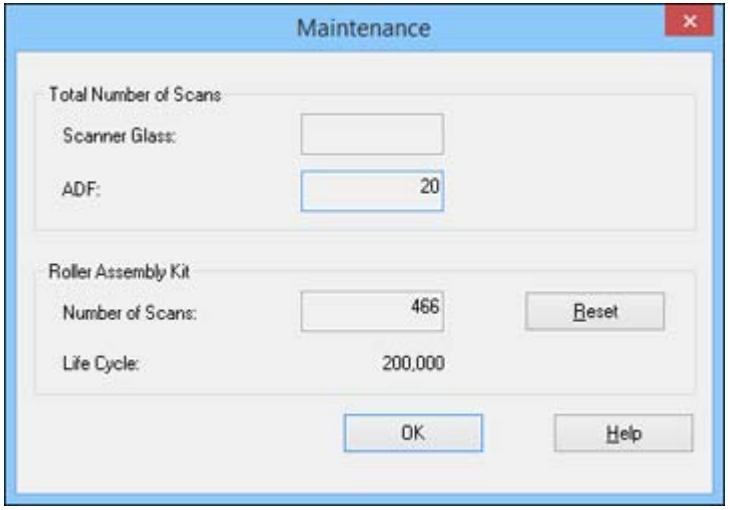

4. Click **Reset**.

   The number of scans changes to 0 (zero).

5. Click **OK**.

Parent topic: Replacing the Scanner Rollers

Related tasks

Checking the Scanner Roller Counter

Transporting Your Scanner

If you need to ship your product, transport it a long distance, or store it for an extended period, prepare it for transportation as described here.

1. Turn off the scanner and unplug the AC adapter.
2. Disconnect any connected cables.
3. Close the input tray extension and the output tray.

   Note: Make sure the output tray is securely closed.

4. Remove the input tray by pulling it towards the scanner cover.

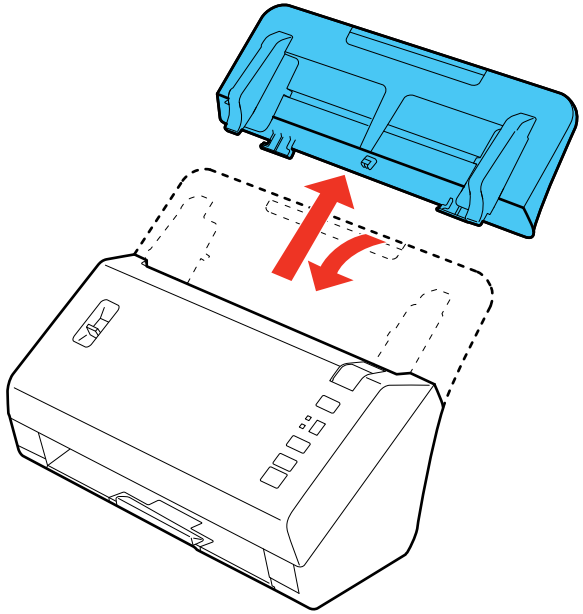

5. Place the scanner in its original packing materials, if possible, or use equivalent materials with cushioning around the product.

Parent topic: Cleaning and Transporting Your Scanner

Solving Problems

Check these sections for solutions to problems you may have using your product.

Scanner Light Status
Solving Scanning Problems
Solving Network Interface Unit Problems
Solving Scanned Image Quality Problems
Uninstalling Scanner Software
Where to Get Help

Scanner Light Status

You can often diagnose problems with your scanner by checking its lights.

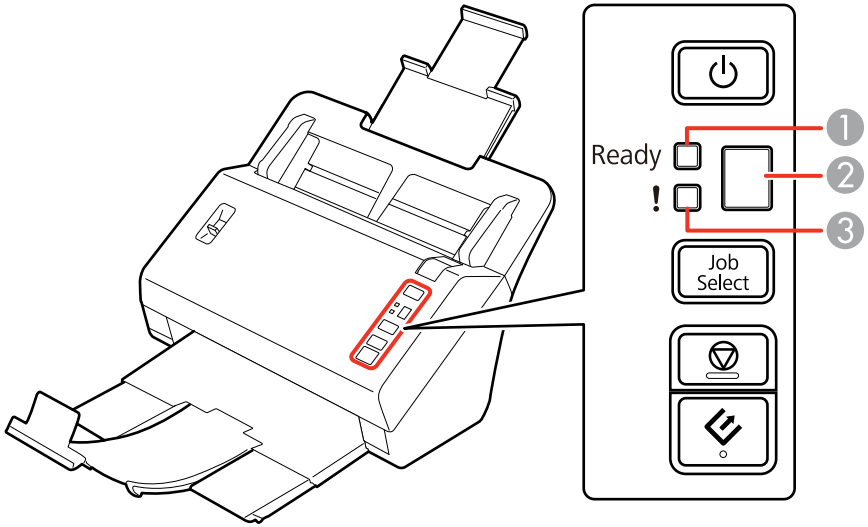

Lights	
1	The **Ready** light
2	The numeric display
3	The **!** error light

Light status	Condition/solution
The **Ready** light is on	The scanner is turned on and ready to scan.
The **Ready** light is flashing	The scanner is scanning or initializing. Wait for the **Ready** light to stop flashing before turning off the scanner.
The **!** error light is on	An error has occurred. Try the following: • Check the scanner connection to your computer to make sure it is secure. • Make sure the scanner cover is closed and there is no jammed paper inside. • If the **!** error light is still on, turn off the scanner, then turn it on again. If the error continues, the scanner may be malfunctioning. Contact Epson for support.
The **!** error light and the **Ready** light are flashing alternately	The scanner firmware is updating. Do not turn off the scanner or disconnect any cables until the status lights have stopped flashing.
The **!** error light and the **Ready** light are flashing at the same time	A scanner error has occurred. Turn the scanner off and then back on again. If the error continues, contact Epson for support.
The numeric display shows E	The **Job Select** button is unable to select saved jobs from Document Capture Pro because the scanner is connected to a network.

Parent topic: Solving Problems

Related references

Scanner Buttons and Lights

Solving Scanning Problems

Check these solutions if you have problems scanning with your product.

Scanner Does Not Turn On or Turns Off Unexpectedly

Scanner Button Does Not Work as Expected

Scanning Software Does Not Operate Correctly

Cannot Start Epson Scan

Original Feeds Incorrectly in Scanner

Original Jams in Scanner
Scanning is Slow

Parent topic: Solving Problems

Scanner Does Not Turn On or Turns Off Unexpectedly

If the scanner does not turn on or if it turns off unexpectedly, try these solutions:

- Make sure the AC adapter is securely connected to the scanner and to a working electrical outlet.
- If the scanner turns off unexpectedly, you may need to adjust the Power Off Timer setting.

Parent topic: Solving Scanning Problems

Scanner Button Does Not Work as Expected

If the scanner button does not start the correct program or perform the correct action, try these solutions:

- Make sure Document Capture Pro is installed correctly. If necessary, uninstall and reinstall it.
- Make sure you have assigned the correct job to the scanner button and change it, if necessary.
- If you selected **Keep Blocking** in a Windows Security Alert window during or after installation of Document Capture Pro, unblock the EEventManager Application program in the Windows security settings; see Windows help for details.

Parent topic: Solving Scanning Problems

Scanning Software Does Not Operate Correctly

If your scanning software does not operate correctly, try these solutions:

- Make sure your computer has adequate memory and meets the system requirements for your operating system.
- Make sure your computer is not running in a power-saving mode, such as sleep or standby. If so, wake your system and restart your scanning software.
- If you upgraded your operating system but did not reinstall your scanning software, try reinstalling it.

Parent topic: Solving Scanning Problems

Related tasks

Uninstalling Scanner Software

Cannot Start Epson Scan

If you cannot start Epson Scan, try these solutions:

- Make sure your scanner is turned on and any interface cables are securely connected at both ends.
- Make sure Epson Scan is selected in your scanning program.
- Make sure your computer is not running in a power-saving mode, such as sleep or standby. If so, wake your system and restart Epson Scan.
- If you connected the scanner using a USB cable, make sure it is connected directly to your computer or through only one USB hub.
- Make sure you do not have multiple versions of Epson Scan installed. If you do, uninstall both versions and install one version.
- If you upgraded your operating system but did not reinstall Epson Scan, try reinstalling it.

Parent topic: Solving Scanning Problems

Original Feeds Incorrectly in Scanner

If you have problems feeding originals in your scanner, try these solutions:

- If multiple pages feed at once, try the following:
  - Make sure the paper separation lever is in the lower position.
  - Remove the originals, fan the edges to separate the sheets, if necessary, and reload them.
  - Load only originals that meets the specifications for your scanner.
  - Clean inside the scanner and replace the roller assembly kit, if necessary.
- If you see a double feed error in the Epson Scan window or the Document Capture Pro window (Windows only), start Epson Scan, select **Configuration**, select the **Detect Double Feed** setting, and select **Standard** as the Paper Thickness setting. If the error persists, deselect the **Detect Double Feed** setting.

Parent topic: Solving Scanning Problems

Related references

Page Separation Lever

Related tasks

Loading Originals in the Input Tray

Loading Plastic Cards in the Input Tray

Loading Special Documents

Cleaning Inside Your Scanner

Related topics

Replacing the Scanner Rollers

Original Jams in Scanner

If an original has jammed inside the scanner, follow these steps:

1. Turn off your scanner.
2. Remove all originals from the input tray.
3. Pull down the cover open lever and open the scanner cover.

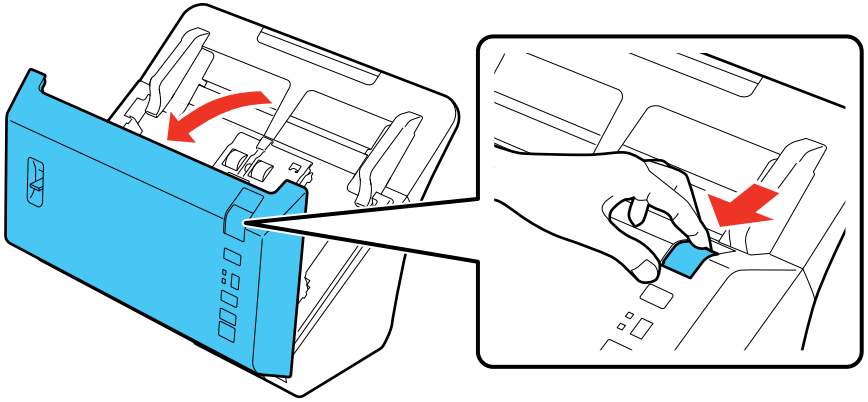

4. Gently pull out any jammed originals from inside the scanner.

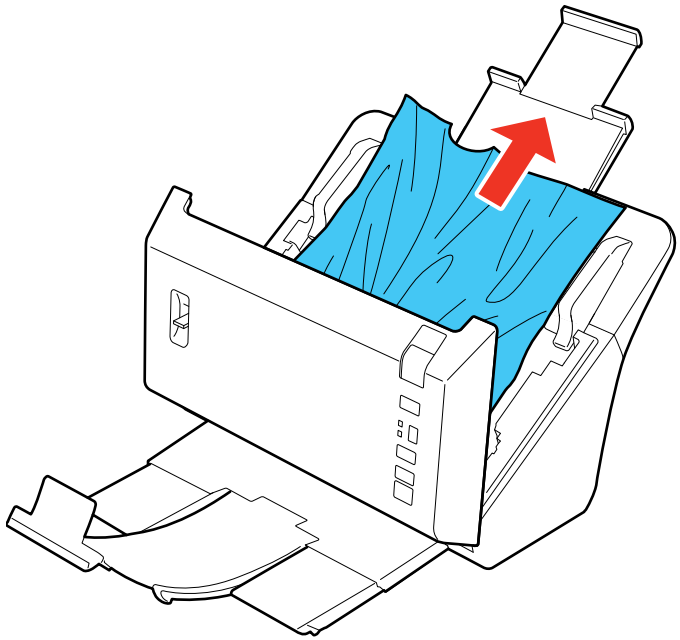

5. Gently pull out any jammed originals from the output tray.

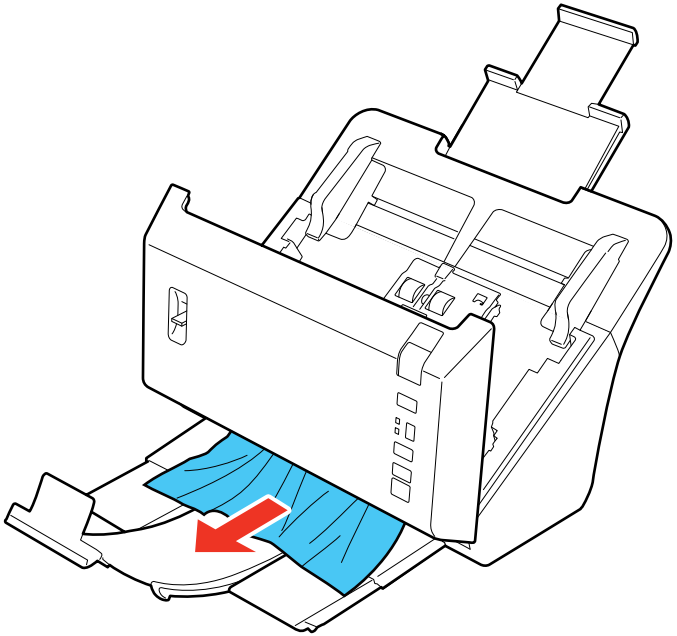

6. Close the scanner cover.
7. Carefully follow all loading instructions when you reload originals.

Parent topic: Solving Scanning Problems

Related tasks

Loading Originals in the Input Tray
Loading Plastic Cards in the Input Tray
Loading Special Documents

Scanning is Slow

If scanning becomes slow, try these solutions:

- Scan your original at a lower resolution, if possible.
- Make sure your system meets the requirements for your operating system. If you are scanning a high-resolution image, you may need more than the minimum requirements, such as a Hi-Speed USB port. If necessary, increase your system's memory.

- If you are running virus protection or other security software, exclude the TWAIN.log files from monitoring or set the TWAIN.log file as read only. See your virus protection or security software instructions for details. The TWAIN.log file is saved in the following locations:
  - **Windows XP**: C:\Documents and Settings\(user name)\Local Settings\Temp
  - **Windows (other versions)**: C:\Users\(user name)\AppData\Local\Temp

Parent topic: Solving Scanning Problems

Related tasks

Uninstalling Scanner Software

Solving Network Interface Unit Problems

If you have problems scanning using the optional Network Interface Unit, try these solutions:

- Make sure the Network Interface Unit is securely connected to the network or your computer and the scanner with a working cable.
- Make sure your scanning software is installed correctly and that you have selected the correct settings for the program you are using.
- Check that the IP address for the scanner is correct in the Epson Scan Settings utility.
- If you are scanning with Document Capture Pro, check the following:
  - Make sure the Group settings are the same as the Network Interface Unit settings. See the Document Capture Pro Help utility, and the Network Interface Unit *User's Guide* for details.
  - With Windows, make sure the program is not being blocked by a network firewall. If so, you can unblock the EEventManager Application program in the Windows security settings; see Windows help for details.
  - If the scanner is connected to the Network Interface Unit, the numeric display on the scanner shows and you cannot select a scanning job from the display.

Parent topic: Solving Problems

Solving Scanned Image Quality Problems

Check these sections if a scanned image on your computer screen has a quality problem.

Back of Original Image Appears in Scanned Image

Scanned Characters are Blurry

Characters are not Recognized During Conversion to Editable Text (OCR)

Ripple Patterns Appear in an Image

Line of Dots Appears in All Scanned Images

Scanned Image Edges are Cropped

Parent topic: Solving Problems

Back of Original Image Appears in Scanned Image

If an image from the back of a thin original appears in your scanned image, make sure you selected the correct Image Type setting for your original and select the **Text Enhancement** setting in Epson Scan.

Parent topic: Solving Scanned Image Quality Problems

Related references

Available Image Adjustments

Scanned Characters are Blurry

If characters in a scanned image appear blurry, adjust these Epson Scan settings (if available) and try scanning again:

- Select the **Text Enhancement** setting.
- Adjust the **Threshold** setting.
- Increase the **Resolution** setting.

Parent topic: Solving Scanned Image Quality Problems

Related references

Available Image Adjustments

Characters are not Recognized During Conversion to Editable Text (OCR)

If characters in your scanned images are not recognized during OCR conversion, try these solutions:

- Make sure your original is straight.
- Adjust these Epson Scan settings (if available) and try scanning again:
  - Select **Text Enhancement**
  - Select the correct **Image Type** setting
  - Adjust the **Threshold** setting
- Check the manual for your OCR software for any additional adjustments.
- If ABBYY FineReader is not installed, install the software and try your scan again.

Parent topic: Solving Scanned Image Quality Problems

Related references

Available Image Adjustments

Ripple Patterns Appear in an Image

You may see a ripple pattern (called a moiré) in scanned images of printed documents. This is caused by interference from differing pitches in the scanner's screen and your original's halftone screen. To reduce this effect, adjust these Epson Scan settings (if available) and try scanning again:

- Select the **Descreening** setting.
- Select a lower **Resolution** setting.

Parent topic: Solving Scanned Image Quality Problems

Related references

Available Image Adjustments

Line of Dots Appears in All Scanned Images

If a line of dots appears in all your scanned images, clean the scanner glass with a soft, dry, lint-free cloth or use a small amount of glass cleaner on the cloth, if necessary. Paper towels are not recommended.

Caution: Do not spray glass cleaner directly on the scanner glass.

Parent topic: Solving Scanned Image Quality Problems

Related tasks

Cleaning Inside Your Scanner

Scanned Image Edges are Cropped

If the edges of a scanned image are cropped, try the following solutions:

- Select **Auto Detect** as the Size setting (Epson Scan) or the Document Size setting (Document Capture Pro or Document Capture).
- In Epson Scan, click **Configuration** and select the **Document** tab. Adjust the cropping area shown in **Crop Margins for Size "Auto"**.
- In Document Capture Pro, select **Detailed Settings** from the Scan window. Click **Configuration** and select the **Document** tab. Adjust the cropping area shown in **Crop Margins for Size "Auto"**.

Parent topic: Solving Scanned Image Quality Problems

Related tasks

Scanning with Document Capture Pro

Scanning with Epson Scan

Uninstalling Scanner Software

You can uninstall and then re-install your scanner software to solve certain problems.

1. Turn off the scanner.
2. Disconnect any interface cables.
3. Do the following to uninstall each of your scanning software programs, then follow any on-screen instructions:
   - **Windows 8.x**: Navigate to the **Apps** screen and select **Control Panel** > **Programs** > **Programs and Features**. Select the scanner software program and click **Uninstall/Change**.
   - **Windows 7 or Windows Vista**: Open the Windows **Control Panel** utility. Select **Programs and Features**. (In Classic view, select **Programs** and click **Uninstall a program**.) Select the scanner software program and click **Uninstall/Change**.
   - **Windows XP**: Open the Windows **Control Panel** utility. Double-click **Add or Remove Programs**. Select the scanner software program and click **Change/Remove**.
4. Restart your computer, then see the *Start Here* sheet to re-install your software.

Note: If you find that re-installing your scanner software does not solve a problem, contact Epson.

Parent topic: Solving Problems

Where to Get Help

If you need to contact Epson for technical support services, use the following support options.

Internet Support

Visit Epson's support website at epson.com/support (U.S.) or epson.ca/support (Canada) for solutions to common problems. You can download drivers and documentation, get FAQs and troubleshooting advice, or email Epson with your questions.

Speak to a Support Representative

Before you call Epson for support, please have the following information ready:

- Product name

- Product serial number (located on a label on the product)
- Proof of purchase (such as a store receipt) and date of purchase
- Computer configuration
- Description of the problem

Then call:

- U.S.: (562) 276-4382, 6 AM to 8 PM, Pacific Time, Monday through Friday, and 7 AM to 4 PM, Pacific Time, Saturday
- Canada: (905) 709-3839, 6 AM to 8 PM, Pacific Time, Monday through Friday, and 7 AM to 4 PM, Pacific Time, Saturday

Days and hours of support are subject to change without notice. Toll or long distance charges may apply.

Note: For help using any other software on your system, see the documentation for that software for technical support.

Purchase Supplies and Accessories

You can purchase genuine Epson accessories at epson.com (U.S. sales) or epson.ca (Canadian sales). You can also purchase accessories from an Epson authorized reseller. To find the nearest one, call 800-GO-EPSON (800-463-7766).

Parent topic: Solving Problems

Technical Specifications

These sections list the technical specifications for your scanner.

Note: Epson offers a recycling program for end of life products. Please go to epson.com/recycle for information on how to return your products for proper disposal.

Windows System Requirements
General Specifications
Dimension Specifications
Electrical Specifications
Environmental Specifications
USB Interface Specifications
Safety and Approvals Specifications

Windows System Requirements

Make sure your system meets these requirements before using it with your scanner.

System	Microsoft Windows 8.x, Windows 7, Windows Vista, Windows XP Professional Edition, Windows XP Home Edition
Interface	External USB port (Type A)
Display	Color monitor with 800 × 600 resolution or higher, and 24-bit color (Full Color)

Parent topic: Technical Specifications

General Specifications

Scanner type	Sheet feed, one pass duplex, color
Photoelectric device	1 line CMOS Contact Image Sensor (CIS)
Effective pixels	5100 × 8400 pixels at 600 dpi
Document size	Maximum: 8.5 × 120 inches (215.9 × 3048 mm)
	Minimum: 2 × 2 inches (50.8 × 50.8 mm)

Paper input	Facedown loading
Paper output	Facedown ejection
Paper capacity	80 sheets of paper at 21 lb (80 g/m^2) weight
Scanning resolution	600 dpi (main scan)
	600 dpi with Micro Step (sub scan)
Output resolution	50-1200 dpi (in 1 dpi increments)
Image data	16 bits per pixel per color internal
	1 to 8 bits per pixel per color external
Interface	One Hi-Speed USB port
Light source	RGB LED

Parent topic: Technical Specifications

Dimension Specifications

Height	8.1 inches (206 mm)
Width	11.8 inches (300 mm)
Depth	8.7 inches (221 mm)
Weight	8.8 lb (4 kg)

Note: Dimensions do not include projecting parts.

Parent topic: Technical Specifications

Electrical Specifications

Scanner

Note: Check the label on the scanner and the AC adapter for voltage information. Power consumption varies depending on operating conditions or whether an option is installed.

Rated input voltage	DC 24 V

Rated input current	2 A
Rated input frequency	50 to 60 Hz
Power consumption	Operating: 42 W Ready mode: 8 W Sleep mode: 1.6 W Power off mode: 0.4 W

AC Adapter

AC adapter model	A421H
Rated input voltage	AC 100 to 240 V
Rated input current	AC 1.20 A
Rated input frequency	50 to 60 Hz
Rated output voltage	DC 24 V
Rated output current	2 A

Parent topic: Technical Specifications

Environmental Specifications

Temperature	Operating: 41 to 95 °F (5 to 35 °C) Storage: –13 to 140 °F (–25 to 60 °C)
Humidity	Operating: 10 to 80% RH
(non-condensing)	Storage: 10 to 85% RH
Operating conditions	Ordinary office or home conditions

Note: Avoid operating the scanner in direct sunlight, near a strong light source, or in extremely dusty conditions.

Parent topic: Technical Specifications

USB Interface Specifications

Interface type	Universal Serial Bus Specifications Revision 2.0
Electrical standard	Full Speed mode (12 Mbits per second) and Hi-Speed mode (480 Mbits per second) of Universal Serial Bus Specifications Revision 2.0
Connector type	One Type B port

Parent topic: Technical Specifications

Safety and Approvals Specifications

Scanner

United States	EMC: FCC part 15 Subpart B class B
Canada	EMC: CAN/CSA-CEI/IEC CISPR 22 Class B

AC Adapter

United States	Safety: UL60950-1
	EMC: FCC part 15 Subpart B class B
Canada	Safety: CAN/CSA C22.2 No. 60950-1
	EMC: CAN/CSA-CEI/IEC CISPR 22 Class B

Parent topic: Technical Specifications

Notices

Check these sections for important notices about your scanner.

Note: Epson offers a recycling program for end of life products. Please go to epson.com/recycle for information on how to return your products for proper disposal.

Important Safety Instructions
Restrictions on Copying
Default Delay Times for Power Management for Epson Products
Trademarks
Copyright Notice

Important Safety Instructions

Follow these safety instructions when setting up and using the scanner:

- Read all these instructions, and follow all warnings and instructions marked on the scanner.
- Place the scanner close enough to the computer for the interface cable to reach it easily.
- Do not place or store the scanner or the AC adapter outdoors, near excessive dirt or dust, water, heat sources, or in locations subject to shocks, vibrations, high temperature or humidity, direct sunlight, strong light sources, or rapid changes in temperature or humidity.
- Do not use with wet hands.
- Place the scanner and the AC adapter near an electrical outlet where the adapter can be easily unplugged.
- The AC power cord should be placed to avoid abrasions, cuts, fraying, crimping, and kinking.
- Do not place objects on top of the AC power cord and do not allow the AC adapter or the power cord to be stepped on or run over. Be particularly careful to keep the AC power cord straight at the end and the point where it enters the AC adapter.
- Use only the AC adapter that comes with your scanner. Using any other adapter could cause fire, electrical shock, or injury.
- The AC adapter is designed for use with the scanner with which it was included. Do not attempt to use it with other electronic devices unless specified.

- Use only the type of power source indicated on the AC adapter's label, and always supply power directly from a standard domestic electrical outlet with the AC adapter that meets the relevant local safety standards.
- When connecting this product to a computer or other device with a cable, ensure the correct orientation of the connectors. Each connector has only one correct orientation. Inserting a connector in the wrong orientation may damage both devices connected by the cable.
- Avoid using outlets on the same circuit as photocopiers or air control systems that regularly switch on and off.
- If you use an extension cord with the scanner, make sure the total ampere rating of the devices plugged into the extension cord does not exceed the cord's ampere rating. Also, make sure the total ampere rating of all devices plugged into the wall outlet does not exceed the wall outlet's ampere rating.
- Never disassemble, modify, or attempt to repair the AC adapter, scanner, or scanner option by yourself except as specifically explained in the scanner's guides.
- Do not insert objects into any opening as they may touch dangerous voltage points or short out parts. Beware of electrical shock hazards.
- If damage occurs to the plug, replace the cord set or consult a qualified electrician. If there are fuses in the plug, make sure you replace them with fuses of the correct size and rating.
- Unplug the scanner and the AC adapter, and refer servicing to qualified service personnel under the following conditions: The AC adapter or plug is damaged; liquid has entered the scanner or the AC adapter; the scanner or the AC adapter has been dropped or the case has been damaged; the scanner or the AC adapter does not operate normally or exhibits a distinct change in performance. (Do not adjust controls that are not covered by the operating instructions.)
- Unplug the scanner and the AC adapter before cleaning. Clean with a damp cloth only. Do not use liquid or aerosol cleaners.
- If you are not going to use the scanner for a long period, be sure to unplug the AC adapter from the electrical outlet.
- Place the product on a flat, stable surface that extends beyond the base of the product in all directions. If you place the product by the wall, leave at least 3.9 inches (10 cm) between the back of the product and the wall. The product will not operate properly if it is tilted at an angle.
- After replacing consumable parts, dispose of them correctly following the rules of your local authority. Do not disassemble them.

Parent topic: Notices

Restrictions on Copying

Observe the following restrictions to ensure responsible and legal use of your scanner.

Copying of the following items is prohibited by law:

- Bank bills, coins, government-issued marketable securities, government bond securities, and municipal securities
- Unused postage stamps, pre-stamped postcards, and other official postal items bearing valid postage
- Government-issued revenue stamps, and securities issued according to legal procedure

Exercise caution when copying the following items:

- Private marketable securities (stock certificates, negotiable notes, checks, etc.), monthly passes, concession tickets, etc.
- Passports, driver's licenses, warrants of fitness, road passes, food stamps, tickets, etc.

Note: Copying these items may also be prohibited by law.

Restriction on disassembling and decompiling

You may not disassemble, decompile or otherwise attempt to derive the source code of any software included with this product.

Parent topic: Notices

Default Delay Times for Power Management for Epson Products

This product will enter sleep mode after a period of nonuse. The time interval has been set at the factory to ensure that the product meets Energy Star standards of energy efficiency, and cannot be modified by the consumer.

Parent topic: Notices

Trademarks

EPSON® is a registered trademark and EPSON Exceed Your Vision is a registered logomark of Seiko Epson Corporation.

General Notice: Other product names used herein are for identification purposes only and may be trademarks of their respective owners. Epson disclaims any and all rights in those marks.

EPSON®
EXCEED YOUR VISION

Parent topic: Notices

Copyright Notice

All rights reserved. No part of this publication may be reproduced, stored in a retrieval system, or transmitted in any form or by any means, electronic, mechanical, photocopying, recording, or otherwise, without the prior written permission of Seiko Epson Corporation. The information contained herein is designed only for use with this Epson product. Epson is not responsible for any use of this information as applied to other products.

Neither Seiko Epson Corporation nor its affiliates shall be liable to the purchaser of this product or third parties for damages, losses, costs, or expenses incurred by purchaser or third parties as a result of: accident, misuse, or abuse of this product or unauthorized modifications, repairs, or alterations to this product, or (excluding the U.S.) failure to strictly comply with Seiko Epson Corporation's operating and maintenance instructions.

Seiko Epson Corporation shall not be liable for any damages or problems arising from the use of any options or any consumable products other than those designated as Original Epson Products or Epson Approved Products by Seiko Epson Corporation.

Seiko Epson Corporation shall not be held liable for any damage resulting from electromagnetic interference that occurs from the use of any interface cables other than those designated as Epson approved Products by Seiko Epson Corporation.

This information is subject to change without notice.

libTIFF Software Acknowledgment
libjpeg-turbo
A Note Concerning Responsible Use of Copyrighted Materials
Copyright Attribution

Parent topic: Notices

libTIFF Software Acknowledgment

Copyright © 1988-1997 Sam Leffler

Copyright © 1991-1997 Silicon Graphics, Inc.

Permission to use, copy, modify, distribute, and sell this software and its documentation for any purpose is hereby granted without fee, provided that (I) the above copyright notices and this permission notice appear in all copies of the software and related documentation, and (ii) the names of Sam Leffler and Silicon Graphics may not be used in any advertising or publicity relating to the software without the specific, prior written permission of Sam Leffler and Silicon Graphics.

THE SOFTWARE IS PROVIDED "AS-IS" AND WITHOUT WARRANTY OF ANY KIND, EXPRESS, IMPLIED OR OTHERWISE, INCLUDING WITHOUT LIMITATION, ANY WARRANTY OF MERCHANTABILITY OR FITNESS FOR A PARTICULAR PURPOSE.

IN NO EVENT SHALL SAM LEFFLER OR SILICON GRAPHICS BE LIABLE FOR ANY SPECIAL, INCIDENTAL, INDIRECT OR CONSEQUENTIAL DAMAGES OF ANY KIND, OR ANY DAMAGES WHATSOEVER RESULTING FROM LOSS OF USE, DATA OR PROFITS, WHETHER OR NOT ADVISED OF THE POSSIBILITY OF DAMAGE, AND ON ANY THEORY OF LIABILITY, ARISING OUT OF OR IN CONNECTION WITH THE USE OR PERFORMANCE OF THIS SOFTWARE.

Parent topic: Copyright Notice

libjpeg-turbo

Copyright (C) 1991-2012 Thomas G. Lane, Guido Vollbeding

Copyright (C) 1999-2006 MIYASAKA Masaru

Copyright (C) 2009 Pierre Ossman for Cendio AB

Copyright (C) 2009-2013 D. R. Commander

Copyright (C) 2009-2011 Nokia Corporation and/or its subsidiary(-ies)

Redistribution and use in source and binary forms, with or without modification, are permitted provided that the following conditions are met:

- Redistributions of source code must retain the above copyright notice, this list of conditions and the following disclaimer.
- Redistributions in binary form must reproduce the above copyright notice, this list of conditions and the following disclaimer in the documentation and/or other materials provided with the distribution.
- Neither the name of the libjpeg-turbo Project nor the names of its contributors may be used to endorse or promote products derived from this software without specific prior written permission.

THIS SOFTWARE IS PROVIDED BY THE COPYRIGHT HOLDERS AND CONTRIBUTORS "AS IS", AND ANY EXPRESS OR IMPLIED WARRANTIES, INCLUDING, BUT NOT LIMITED TO, THE IMPLIED WARRANTIES OF MERCHANTABILITY AND FITNESS FOR A PARTICULAR PURPOSE ARE DISCLAIMED. IN NO EVENT SHALL THE COPYRIGHT HOLDERS OR CONTRIBUTORS BE LIABLE

FOR ANY DIRECT, INDIRECT, INCIDENTAL, SPECIAL, EXEMPLARY, OR CONSEQUENTIAL DAMAGES (INCLUDING, BUT NOT LIMITED TO, PROCUREMENT OF SUBSTITUTE GOODS OR SERVICES; LOSS OF USE, DATA, OR PROFITS; OR BUSINESS INTERRUPTION) HOWEVER CAUSED AND ON ANY THEORY OF LIABILITY, WHETHER IN CONTRACT, STRICT LIABILITY, OR TORT (INCLUDING NEGLIGENCE OR OTHERWISE) ARISING IN ANY WAY OUT OF THE USE OF THIS SOFTWARE, EVEN IF ADVISED OF THE POSSIBILITY OF SUCH DAMAGE.

Parent topic: Copyright Notice

A Note Concerning Responsible Use of Copyrighted Materials

Epson encourages each user to be responsible and respectful of the copyright laws when using any Epson product. While some countries' laws permit limited copying or reuse of copyrighted material in certain circumstances, those circumstances may not be as broad as some people assume. Contact your legal advisor for any questions regarding copyright law.

Parent topic: Copyright Notice

Copyright Attribution

© 2014 Epson America, Inc.

2/14

CPD-40184

Parent topic: Copyright Notice