EV03000.1, EV04000.1, EV05000.1

CLASS D MONOBLOCK AMPLIFIERS

SOUND STORM®
LABORATORIES

3451 LUNAR COURT, OXNARD CA 93030
PHONE: 888.38.STORM
805.983.8008
FAX: 805.983.7068

TECHNICAL SUPPORT
www.soundstormlab.com

0514

EV03000.1, EV04000.1, EV05000.1
CLASS D MONOBLOCK AMPLIFIERS

AUDIO SYSTEMS

EVO3000.1 EVO4000.1 EVO5000.1

CLASS D MonoBlock Car Audio Amplifiers

Congratulations on your purchase of a Sound Storm Laboratories EVOLUTION Amplifier.

It has been designed, engineered and manufactured to bring you the highest level of performance and quality, and will afford you years of listening pleasure.

Thank you for making Sound Storm Laboratories your choice for car audio entertainment!

USER'S MANUAL

page CONTENTS

2 Introduction
2 Features
3 What is included?
3 General precautions
3 Installation precautions
3 Mounting the amplifier
4 Connecting the amplifier
5 Important system considerations
5 Tips for a safe system
6 Low level input wiring
6 Speaker wiring
7 Power Connections
Normal and with stiffening Capacitor
8 Bridging Two EVOLUTION CLASS D Amplifiers
11 Troubleshooting
12 Specifications

Introduction

With the Sound Storm Laboratories EVOLUTION Class D amplifier series, we are introducing three new CLASS D amplifiers designed in the USA.

These EVOLUTION models feature variable low pass and subsonic filters and a variable input gain control. They also incorporate a phase selector switch to help compensate for time delays in subwoofer applications.

For further flexibility in the use of a subwoofer, a variable 0-+18dB Bass Boost control has been included. You can control the subwoofer level with the remote level control module.

Sound Storm Laboratories understands that amplifiers are placed in many different kinds of installations, so we have also included an input sensitivity control to help you integrate the amp into your system regardless of the nature of your input source.

A special feature on this Class D amp is DataLink circuitry, which allows you to "strap" together (for example) two EVO5000.1 for an astounding total maximum output power of 10,000 watts.

Features

Your new EVOLUTION amplifier features the following:

- **Class D operation**
- **MOSFET PWM (Pulse Width Modulated) Power Supply**
- **1 Ω stable mono operation**
- **Thermal, overload and speaker short protection**
- **Soft turn-on circuit**
- **Remote turn-on/turn-off circuit**
- **Variable input gain control**
- **Input voltage sensitivity selector**
- **Variable subsonic filter: 15-40 Hz, 12dB/octave (EVO3000.1 / EVO4000.1)**
- **Variable subsonic filter: 15-40 Hz, 24dB/octave (EVO5000.1)**
- **Variable low pass filter: 50-250 Hz, 12dB/octave (EVO3000.1 / EVO4000.1)**
- **Variable low pass filter: 50-250 Hz, 24dB/octave (EVO5000.1)**
- **Variable 0-+18dB Bass Boost**
- **0/180° Phase Shift selector**
- **Nickel-plated RCA low level inputs**
- **Nickel-plated speaker and power terminals**
- **LED power and protection indicators**
- **Dark grey anodized heatsink**
- **Remote subwoofer control**

What is included?

When first unpacking your new amplifier, please check first that the package contains all of the items below. If something is missing, contact the store where you purchased the amplifier.

- **Class D amplifier**
- **Remote subwoofer control**
- **Remote subwoofer control cable**
- **DataLink cable (for strapping two identical EVOLUTION Class D amps together)**
- **Four (4) mounting screws**

General precautions

Before installing and using your new* EVOLUTION *amplifier, please become familiar with all the information contained in this manual.

Please keep this manual in a safe place for future reference.

• Do not open or attempt to repair this unit yourself. Dangerous high voltages are present which may result in electric shock. Refer any repairs to a qualified service technician.

• To avoid risk of electric shock or damage to the amplifier, do not permit any of this equipment to become damp or wet from water or drinks. If this does occur, immediately unplug the power wires and send the amplifier to your local dealer or service center as soon as possible.

• If there is smoke or any peculiar odor present during use or if there is damage to any of the component enclosures, immediately unplug the power cord and send the amplifier to your local dealer or service center as soon as possible.

Installation precautions

Before you drill or cut any holes, investigate your car's layout very carefully. Take special care when you work near the gas tank, fuel lines, hydraulic lines and electrical wiring.

Never operate the amplifier when it is unmounted. Attach all audio system components securely to prevent damage, especially in an accident.

Before making or breaking power connections in your system, disconnect the vehicle battery. Confirm that your head unit or other equipment is turned off while connecting the input jacks and speaker terminals.

If you need to replace the power fuse, replace it only with a fuse identical to that supplied with the amplifier. Using a fuse of a different type or rating may result in damage to your audio system or your amplifier which is not covered by the manufacturer's warranty.

Mounting the amplifier

1. Find a suitable location in the vehicle in which to mount the amplifier.

2. Make sure there is sufficient air circulation around the intended mounting location.

3. Mark the location for the mounting hole screws by positioning the amplifier where you wish to install it. Use a scribe or mounting screw, inserted through each of the amp's mounting holes, to mark the mounting surface. If the mounting surface is carpeted, measure the hole centers and mark with a felt tip pen.

4. Drill pilot holes in the mounting surface for the mounting screws. Place the amplifier in position, and attach the amplifier to the mounting surface securely using screws.

Connecting the amplifier

Before doing any wiring, look through this manual and identify the diagrams to follow for power, input and speaker connections for your particular installation. Be sure you understand all the connections before you proceed.

1. Connect the amplifier's power ground terminal to the closest point on the chassis of the car. Keep this ground wire to less than 39" (100 cm) in length. Use 4 gauge (or heavier) wire.

2. Connect the remote terminal to the remote output of the head unit using 16 gauge (or heavier) wire.

3. Connect an empty fuse holder within 18" (45 cm) of the car battery, and run 4 gauge (or heavier) cable from this fuse to the amplifier location.

The purpose of placing a fuse in this location is to protect your vehicle's battery in the event that this wire accidentally touches the chassis ground on its run to the amplifier.

4. Check that the fuse holder is empty. Then connect the fuse holder to the "BATT+" connection on the amplifier.

5. If multiple amplifiers are being used in your system, either:

• Run a separate pair of cables from the battery and a chassis ground point to each amplifier. Each (+) cable must have its own inline fuse.

-or-

• Run a #0 cable from the fuse holder at the battery to a distribution block at or near the amplifier's location. Then run separate cables from the amplifier to this distribution block and to independent chassis ground points.

6. Connect all line inputs and outputs (if used) using high-quality cables. Connect all speakers, following the diagrams in this manual. Be sure to observe proper polarity to avoid audio phase problems.

7. Insert fuse(s) into the battery fuse holder(s).

8. Recheck all connections before powering up the amplifier.

9. Set all level controls to minimum position, and set all crossover controls/switches to the desired frequency points.

10. Power up the head unit and the amplifier. Then set the volume control on the head unit to about 3/4 volume, and adjust the amplifier's input level control(s) to just below the level of distortion.

11. Further fine tuning of the various controls may be necessary to obtain best results.

Important installation considerations for using this amplifier.

Your EVOLUTION Class D amplifier is designed to run with a minimum load of 1Ω .

Operating the EVO3000.1 or EVO4000.1 or EVO5000.1 with a speaker impedance load below 1 Ω may result in poor sound qual ity and damage to the amplifier circuitry. Such damage is not covered under the warranty for this product.

The fuse ratings for these amps is:

EVO3000.1 :70A (35A x2)
EVO4000.1 :105A (35A x3)
EVO5000.1: 200A (ANL type)

Although sufficient for normal working conditions,overloading the amp may result in blown fuses. Please try to avoid overloading the amp in this manner.

Don't misuse the level control!

Do not mistake the input level control for a volume control! It is designed ONLY to match the output level of your audio source to the input level of your amplifier.

Do not adjust this input level to maximum unless your input level requires it.

Ignoring these instructions will result in an input overload to the amplifier, and excessive audio distortion. It can also cause the protection circuit to engage.

Tips for making your system as safe as possible

When making electrical connections to the amplifier, please observe the following:

- Always use 4 ga. wire for power connections and ground connections on the amplifier.

- Wire the amplifier directly to the car battery. Make sure there is circuit protection (such as a fuse) on the positive power lead within 18” of the battery.

- When making a ground connection, always use the shortest possible wire to a good chassis ground point.

- Wire the remote turn-on connection to the remote turn-on lead of your EQ or head unit. In some cases, this may be the power antenna lead of the head unit.

- Fuses protect BOTH the amplifier and the electrical system of your vehicle from faulty conditions. If you must replace a fuse on the amplifier, you must use a fuse of exactly the same type and rating. A different type of fuse or rating may result in damage or cause a fire.

SHOCK HAZARD! Do not open the case of this product. There are dangerous voltages present within the unit. There are no user-serviceable parts within the unit.

Low Level Input Wiring

Low-level (RCA) input wiring is preferred for best audio performance. Always use a high-quality RCA cable for best audio performance.

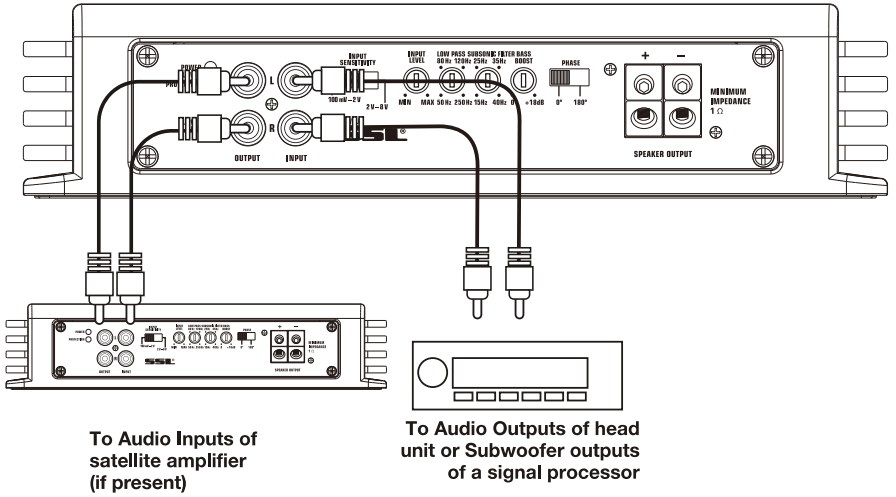

Speaker Connections

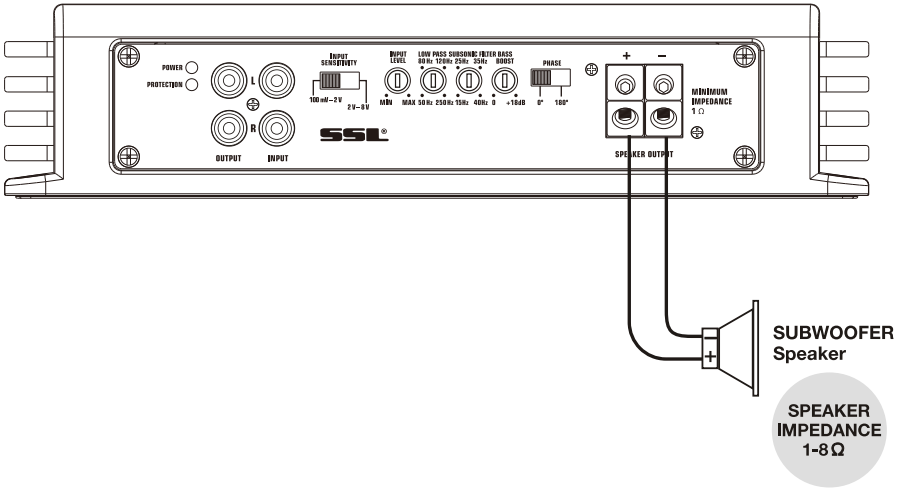

Power Connections

EVO3000.1

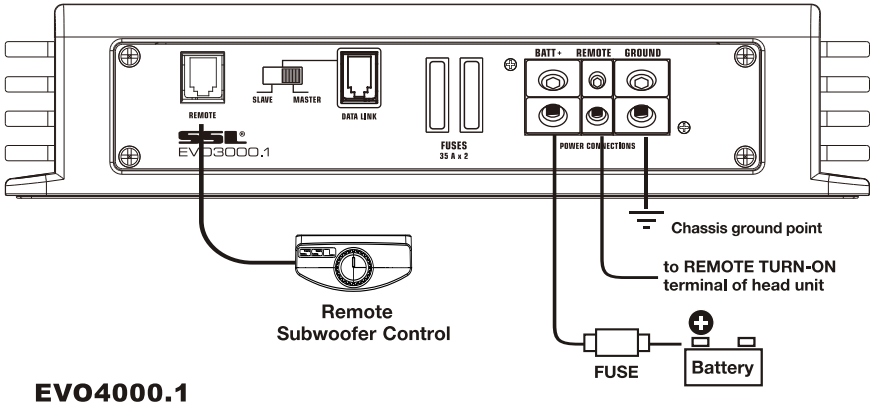

EVO4000.1

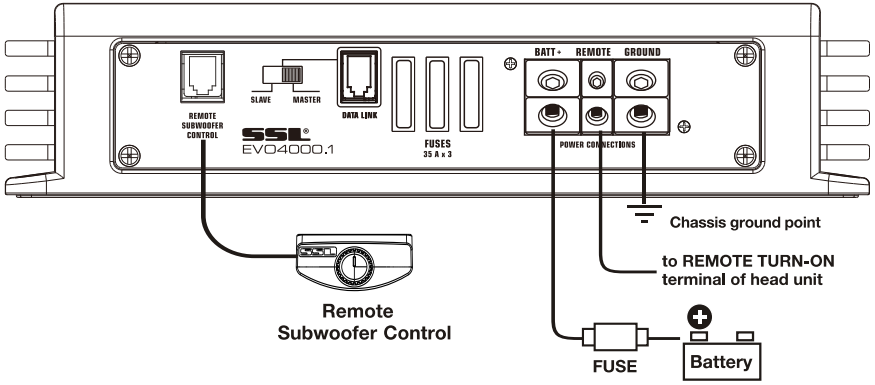

EVO5000.1

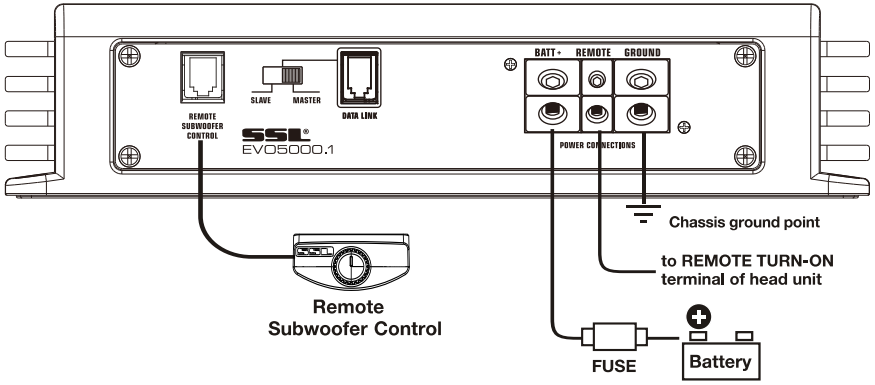

Bridging Two EVO3000.1, EVO4000.1 or EVO5000.1 Amplifiers

FRONT PANEL CONNECTIONS

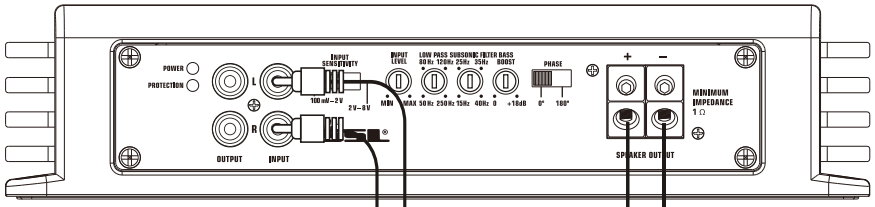

To Audio Outputs of head unit or Subwoofer outputs of a signal processor

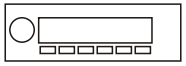

SUBWOOFER Speaker

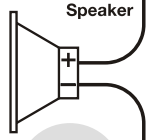

SPEAKER IMPEDANCE 2-8 Ω

SLAVE AMPLIFIER Front Panel

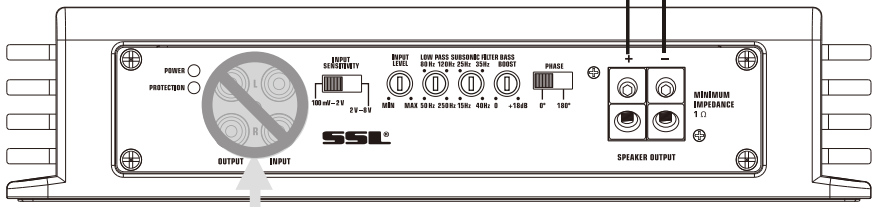

PLEASE NOTE:
In this MASTER AMP/SLAVE AMP configuration, the Slave amp receives its audio signal from the Master Amp. Therefore, DO NOT USE THE INPUTS ON THE SLAVE AMP!

Bridging Two EVO3000.1 or Two EVO4000.1 Amplifiers

FRONT PANEL CONNECTIONS

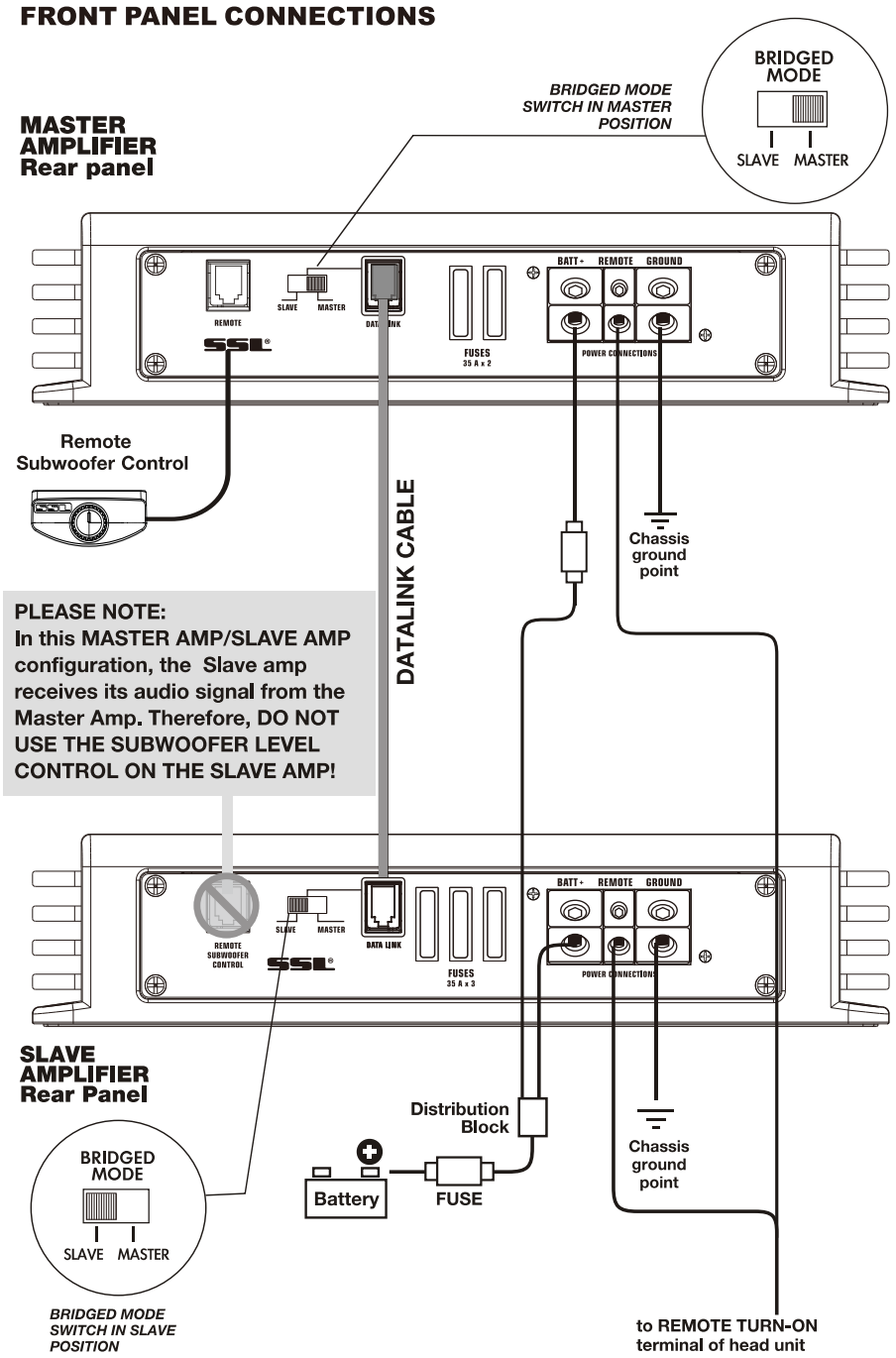

Bridging Two EVO5000.1 Amplifiers

FRONT PANEL CONNECTIONS

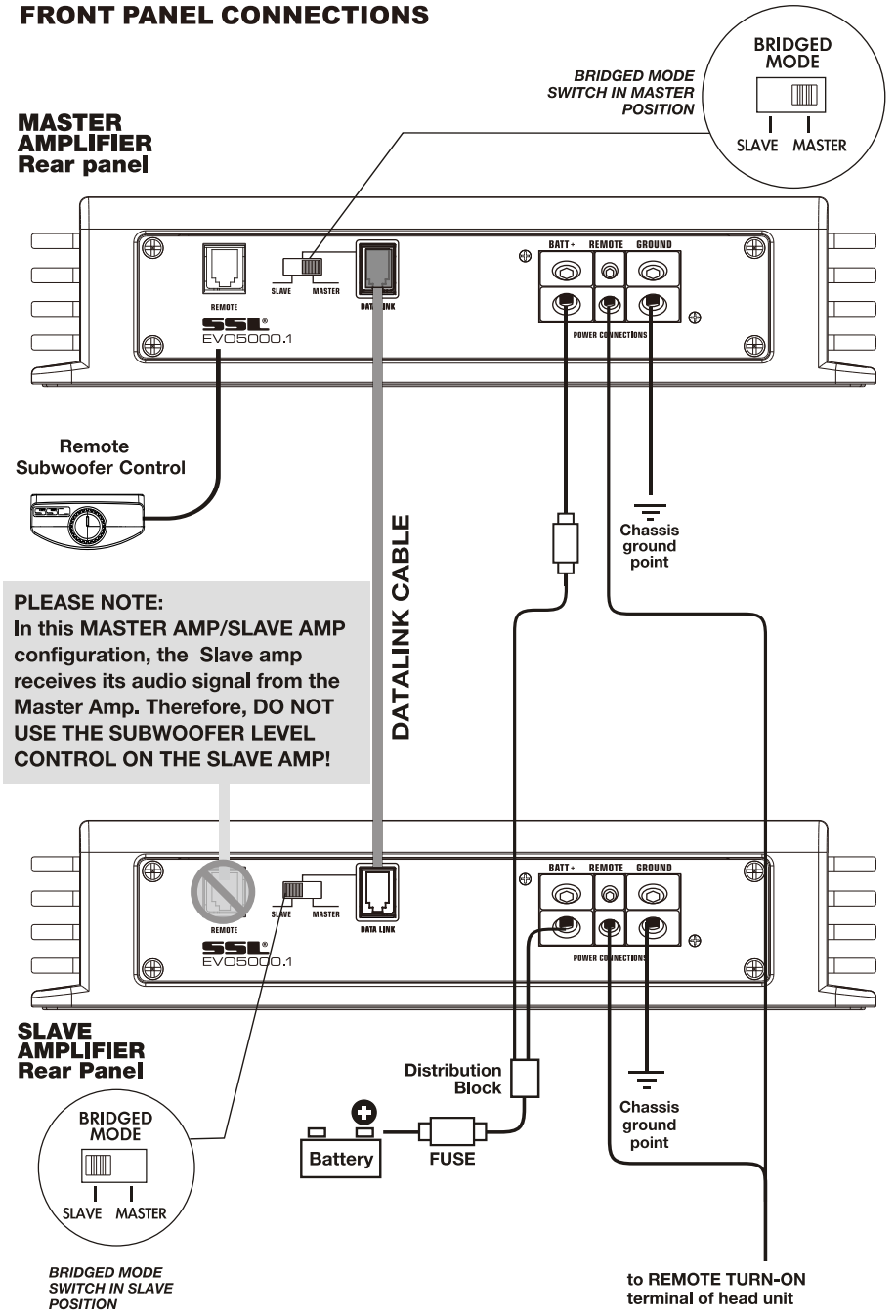

Troubleshooting

If you experience operation or performance problems with this product, compare your installation with the electrical wiring diagram on the previous pages. If problems persist, read the following troubleshooting tips which may help eliminate the problems.

SYMPTOM	POSSIBLE REMEDY
Amplifier will not power up.	*Check to make sure you have a good ground connection.* *Check that the Remote Input (Turn-On) has at least 3VDC.* *Check that there is battery power on the (+) terminal.* *Check that there is at least 12v.* *Check all fuses, replace if necessary.* *Make sure that the Protection LED is not illuminated. If it is lit, shut off the amplifier briefly, and then repower it.*
Protection LED comes on when amplifier is powered up.	*Check for short circuits on speaker leads.* *Turn down the volume control on the head unit to prevent overdriving.* *Remove speaker leads, and reset the amplifier. If the Protection LED still comes on, then the amplifier is faulty and needs servicing.*
No output.	*Check that all fuses are OK.* *Check that amplifier is properly grounded.* *Check that the Remote Input (Turn-On) has at least 3VDC.* *Check that the RCA audio cables are plugged into the proper inputs.* *Check all speaker wiring.*
Low output.	*Reset the Level Control.* *Check the Crossover Control settings.*
Audio present in only one channel.	*Check the RCA interconnect cables.* *Check all speaker wiring.*
High hiss in the speakers.	*Disconnect all RCA inputs to the amplifiers. If the hiss disappears, then plug in the component driving the amplifier and unplug its inputs. If the hiss disappears at this point, go on until the faulty/noisy component is found.* *It is best to set the amplifier's input level control as low as possible. The best subjective signal-to-noise ratio is achieved in this manner. Try to set the head unit as high as possible (without distortion) and the amp input level as low as possible.*
Squealing noise from speakers.	*Check for improperly grounded RCA interconnects.*
Distorted sound.	*Check that the Input Level Control is set to match the signal level of the head unit. Always try to set the Input Level as low as possible.* *Check that all crossover frequencies are properly set.* *Check for short circuits on the speaker leads.*
Amplifier gets very hot.	*Check that the minimum speaker impedance for the amp model is correct.* *Check that there is good air circulation around the amp. In some applications, it may be necessary to add external cooling fan.*
Engine noise (static type)	*This is usually caused by poor quality RCA cables,which can pick up radiated noise. Use only the best quality cables, and route them away from power cables.*
Engine noise (alternator whine)	*Check that speaker leads are not shorted to the vehicle chassis.* *Check that the RCA grounds are not shorted to the vehicle chassis.* *Check that the head unit is properly grounded.*

Specifications

AUDIO SYSTEMS

MODEL	EVO3000.1	EVO4000.1	EVO5000.1
	CLASS D MonoBlock Car Audio Amplifier	*CLASS D MonoBlock Car Audio Amplifier*	*CLASS D MonoBlock Car Audio Amplifier*
RMS Power into 4 Ω	1100 W x 1	1500 W x 1	1750 W x 1
MAX Power into 2 Ω	2200 W x 1	3000 W x 1	3500 W x 1
MAX Power into 1 Ω	3000 W x 1	4000 W x 1	5000 W x 1
Min. Speaker Impedance	1 Ω Mono	1 Ω Mono	1 Ω Mono
THD + N	≤ 0.01 %	≤ 0.01 %	≤ 0.01 %
Input Impedance	10 K Ω	10 K Ω	10 K Ω
Input Sensitivity	Selectable 100 mV - 2 V or 2 V - 8 V	Selectable 100 mV - 2 V or 2 V - 8 V	Selectable 100 mV - 2 V or 2 V - 8 V
Frequency Response	15 Hz - 250 Hz	15 Hz - 250 Hz	15 Hz - 250 Hz
S/N Ratio	100 dB	100 dB	100 dB
Low Pass Filter	50 Hz - 250 Hz	50 Hz - 250 Hz	50 Hz - 250 Hz
Subsonic	15 Hz - 40 Hz	15 Hz - 40 Hz	15 Hz - 40 Hz
Bass Boost	Variable 0 - + 18 dB	Variable 0 - + 18 dB	Variable 0 - + 18 dB
Phase Shift	Selectable 0/180°	Selectable 0/180°	Selectable 0/180°
Fuse Rating	35 A x 2	35 A x 3	200 A x 1
Dimensions (Length): (W x H) (10" x 2.3")	12.68"(L)	14.69"(L)	19.09"(L)

All specifications subject to change without notice.