IBM Flex System x440 Compute Node
Types 7917 and 2584

Installation and Service Guide

IBM Flex System x440 Compute Node
Types 7917 and 2584

Installation and Service Guide

Note

Before using this information and the product it supports, read the general information in "Notices" on page 559, the *Warranty Information* document, and the *IBM Safety Information* and the *Environmental Notices and User Guide* documents on the IBM *Documentation* CD.

First Edition (August 2012)

© Copyright IBM Corporation 2012.
US Government Users Restricted Rights – Use, duplication or disclosure restricted by GSA ADP Schedule Contract with IBM Corp.

Contents

Safety v
Guidelines for trained service technicians vi
Inspecting for unsafe conditions vi
Guidelines for servicing electrical equipment . . vii
Safety statements viii

Chapter 1. Introduction 1
Related documentation 2
The IBM Documentation CD 3
Hardware and software requirements 3
Using the Documentation Browser 3
Notices and statements in this document 4
Features and specifications. 4
What your compute node offers 6
Reliability, availability, and serviceability features . . 9
Major components of the compute node 9
Power, controls, and indicators 10
Compute node controls, connectors, and LEDs . 10
Console breakout cable 13
Turning on the compute node 13
Turning off the compute node 15
System-board layouts 16
System-board connectors 16
System-board jumpers 16
System-board LEDs. 18
System-board switches. 18

Chapter 2. Configuring 23
Updating firmware and device drivers 23
Recovering a UEFI image. 24
Configuring the compute node 25
Using the Setup utility. 26
Setting the boot protocol to boot from legacy devices using the Setup utility 31
Using the Boot Selection Menu program. 32
Updating the Universally Unique Identifier and DMI/SMBIOS data 32
Configuring a RAID array 35
Using the LSI Logic Configuration Utility . . . 36
Setting up the LAN-on-motherboard (LOM) feature 36

Chapter 3. Installing the operating system. 39
Using the ServerGuide Setup and Installation CD . 40
ServerGuide features 40
Typical operating-system installation 41
Installing the operating system without using ServerGuide 41
Using IBM ServerGuide Scripting Toolkit 42

Chapter 4. Accessing the IMM2 43
Accessing the IMM2 remotely 43
Obtaining the IP address for Web interface access 43
Logging in to the web interface. 44
IMM2 action descriptions. 44
Accessing the IMM2 using the LAN over USB interface 48
Configuring the LAN over USB interface . . . 48
Potential conflicts with the LAN over USB interface 49
Resolving conflicts with the IMM2 LAN over USB interface 50

Chapter 5. Parts listing, Types 7917 and 2584 51

Chapter 6. Troubleshooting 57
Service bulletins 57
Diagnostic tools 57
Light path diagnostics 57
IMM event log 63
IBM Dynamic System Analysis Preboot diagnostic program. 65
Event messages 67
IMM messages 67
UEFI diagnostic codes 441
DSA messages 457
Troubleshooting by symptom 459
Compute node start problems 459
Connectivity problems 459
Hard disk drive problems 475
Intermittent problems 476
Intermittent connectivity problems 477
Memory problems. 478
Observable problems 479
Optional device and FRU installation problems 481
Performance problems 481
Power-on problems 482
Software problems. 483
Solving undetermined problems 484
Collecting service data 485

Chapter 7. Installing, removing, and replacing compute node components . 487
Installing an optional device 487
Installation guidelines 487
System reliability guidelines 487
Handling static-sensitive devices 488
Returning a device or component 488
Updating the compute node configuration. . . 488
Removing a compute node from a chassis 489
Installing a compute node in a chassis 490
Removing and replacing Tier 1 customer replaceable units (CRUs) 492
Removing the adapter-retention assembly . . . 492
Installing the adapter-retention assembly . . . 493
Removing the bezel 495
Installing the bezel 495

© Copyright IBM Corp. 2012

Removing the CMOS battery 496
Installing the CMOS battery 497
Removing the compute node cover 498
Installing the compute node cover 500
Removing a DIMM 501
Installing a DIMM. 502
Removing the front handle 517
Installing the front handles 518
Removing the hard disk drive backplane . . . 519
Installing the hard disk drive backplane . . . 521
Removing a hot-swap hard disk drive 522
Installing a hot-swap hard disk drive 523
Removing an I/O expansion adapter 524
Installing an I/O expansion adapter 525
Removing the light path diagnostics panel . . 526
Installing the light path diagnostics panel . . . 527
Removing the USB flash drive. 527
Installing the USB flash drive 528
Removing and replacing Tier 2 customer replaceable units (CRUs) 529
Removing the base assembly 529
Installing the base assembly 531
Removing the chassis bulkhead 533
Installing the chassis bulkhead 534
Removing the hard disk drive cage 535
Installing the hard disk drive cage 536
Removing a fabric connector 537
Installing a fabric connector 538
Removing a microprocessor and heat sink . . . 539
Installing a microprocessor and heat sink . . . 542
Thermal grease 551
Removing a microprocessor-retention assembly 552
Installing a microprocessor-retention assembly 553

Appendix. Getting help and technical assistance. 555
Before you call 555
Using the documentation 556
Getting help and information from the World Wide Web 556
How to send DSA data to IBM 556
Creating a personalized support web page . . . 556
Software service and support 557
Hardware service and support 557
IBM Taiwan product service 557

Notices 559
Trademarks 559
Important notes 560
Particulate contamination 561
Documentation format 562
Telecommunication regulatory statement 562
Electronic emission notices 562
Federal Communications Commission (FCC) statement. 562
Industry Canada Class A emission compliance statement. 563
Avis de conformité à la réglementation d'Industrie Canada 563
Australia and New Zealand Class A statement 563
European Union EMC Directive conformance statement. 563
Germany Class A statement 563
Japan VCCI Class A statement. 564
Japan Electronics and Information Technology Industries Association (JEITA) statement . . . 565
Korea Communications Commission (KCC) statement. 565
Russia Electromagnetic Interference (EMI) Class A statement 565
People's Republic of China Class A electronic emission statement 565
Taiwan Class A compliance statement 565

Index 567

Safety

Before installing this product, read the Safety Information.

قبل تركيب هذا المنتج، يجب قراءة الملاحظات الآمنية

Antes de instalar este produto, leia as Informações de Segurança.

在安装本产品之前，请仔细阅读 Safety Information
(安全信息)。

安裝本產品之前，請先閱讀「安全資訊」。

Prije instalacije ovog produkta obavezno pročitajte Sigurnosne Upute.

Před instalací tohoto produktu si přečtěte příručku bezpečnostních instrukcí.

Læs sikkerhedsforskrifterne, før du installerer dette produkt.

Lees voordat u dit product installeert eerst de veiligheidsvoorschriften.

Ennen kuin asennat tämän tuotteen, lue turvaohjeet kohdasta Safety Information.

Avant d'installer ce produit, lisez les consignes de sécurité.

Vor der Installation dieses Produkts die Sicherheitshinweise lesen.

Πριν εγκαταστήσετε το προϊόν αυτό, διαβάστε τις πληροφορίες ασφάλειας
(safety information).

לפני שתתקינו מוצר זה, קראו את הוראות הבטיחות.

A termék telepítése előtt olvassa el a Biztonsági előírásokat!

Prima di installare questo prodotto, leggere le Informazioni sulla Sicurezza.

製品の設置の前に、安全情報をお読みください。

본 제품을 설치하기 전에 안전 정보를 읽으십시오.

Пред да се инсталира овој продукт, прочитајте информацијата за безбедност.

© Copyright IBM Corp. 2012

ཁྱེད།
རྒྱལ་ཁབ་ཀུན་ནས།
ཐུགས་ཁམས།
ཁ་ཤས་པ།
ཀུན།
ཐུགས།
ཀ་ཤས།
ཐུགས།
ཁ་ཤས།

Les sikkerhetsinformasjonen (Safety Information) før du installerer dette produktet.

Przed zainstalowaniem tego produktu, należy zapoznać się
z książką "Informacje dotyczące bezpieczeństwa" (Safety Information).

Antes de instalar este produto, leia as Informações sobre Segurança.

Перед установкой продукта прочтите инструкции по
технике безопасности.

Pred inštaláciou tohto zariadenia si pečítaje Bezpečnostné predpisy.

Pred namestitvijo tega proizvoda preberite Varnostne informacije.

Antes de instalar este producto, lea la información de seguridad.

Läs säkerhetsinformationen innan du installerar den här produkten.

ཐོན་རྫས་འདི་བདེ་སྒྲིག་མ་བྱས་གོང་། ཟོར་གྱི་ཡིད་གཟབ་
བྱ་འདྲ་མིན་ཡོད་པའི་འོད་སྟེར་བཤད་དགོས།

Bu ürünü kurmadan önce güvenlik bilgilerini okuyun.

مەزكۇر مەھسۇلاتنى ئورنىتىشتىن بۇرۇن بىخەتەرلىك ئۇچۇرلىرىنى ئوقۇپ چىقىڭ.

Youq mwngz yungh canjbinj neix gaxgonq, itdingh aeu doeg aen
canjbinj soengq cungj vahgangj ancien siusik.

Guidelines for trained service technicians

This section contains information for trained service technicians.

Inspecting for unsafe conditions

Use this information to help you identify potential unsafe conditions in an IBM® product that you are working on.

Each IBM product, as it was designed and manufactured, has required safety items to protect users and service technicians from injury. The information in this section addresses only those items. Use good judgment to identify potential unsafe conditions that might be caused by non-IBM alterations or attachment of non-IBM features or optional devices that are not addressed in this section. If you identify

an unsafe condition, you must determine how serious the hazard is and whether you must correct the problem before you work on the product.

Consider the following conditions and the safety hazards that they present:

- Electrical hazards, especially primary power. Primary voltage on the frame can cause serious or fatal electrical shock.
- Explosive hazards, such as a damaged CRT face or a bulging capacitor.
- Mechanical hazards, such as loose or missing hardware.

To inspect the product for potential unsafe conditions, complete the following steps:

1. Make sure that the power is off and the power cords are disconnected.
2. Make sure that the exterior cover is not damaged, loose, or broken, and observe any sharp edges.
3. Check the power cords:
   - Make sure that the third-wire ground connector is in good condition. Use a meter to measure third-wire ground continuity for 0.1 ohm or less between the external ground pin and the frame ground.
   - Make sure that the power cords are the correct type.
   - Make sure that the insulation is not frayed or worn.
4. Remove the cover.
5. Check for any obvious non-IBM alterations. Use good judgment as to the safety of any non-IBM alterations.
6. Check inside the system for any obvious unsafe conditions, such as metal filings, contamination, water or other liquid, or signs of fire or smoke damage.
7. Check for worn, frayed, or pinched cables.
8. Make sure that the power-supply cover fasteners (screws or rivets) have not been removed or tampered with.

Guidelines for servicing electrical equipment

Observe these guidelines when you service electrical equipment.

- Check the area for electrical hazards such as moist floors, nongrounded power extension cords, and missing safety grounds.
- Use only approved tools and test equipment. Some hand tools have handles that are covered with a soft material that does not provide insulation from live electrical current.
- Regularly inspect and maintain your electrical hand tools for safe operational condition. Do not use worn or broken tools or testers.
- Do not touch the reflective surface of a dental mirror to a live electrical circuit. The surface is conductive and can cause personal injury or equipment damage if it touches a live electrical circuit.
- Some rubber floor mats contain small conductive fibers to decrease electrostatic discharge. Do not use this type of mat to protect yourself from electrical shock.
- Do not work alone under hazardous conditions or near equipment that has hazardous voltages.
- Locate the emergency power-off (EPO) switch, disconnecting switch, or electrical outlet so that you can turn off the power quickly in the event of an electrical accident.
- Disconnect all power before you perform a mechanical inspection, work near power supplies, or remove or install main units.

- Before you work on the equipment, disconnect the power cord. If you cannot disconnect the power cord, have the customer power-off the wall box that supplies power to the equipment and lock the wall box in the off position.
- Never assume that power has been disconnected from a circuit. Check it to make sure that it has been disconnected.
- If you have to work on equipment that has exposed electrical circuits, observe the following precautions:
  - Make sure that another person who is familiar with the power-off controls is near you and is available to turn off the power if necessary.
  - When you work with powered-on electrical equipment, use only one hand. Keep the other hand in your pocket or behind your back to avoid creating a complete circuit that could cause an electrical shock.
  - When you use a tester, set the controls correctly and use the approved probe leads and accessories for that tester.
  - Stand on a suitable rubber mat to insulate you from grounds such as metal floor strips and equipment frames.
- Use extreme care when you measure high voltages.
- To ensure proper grounding of components such as power supplies, pumps, blowers, fans, and motor generators, do not service these components outside of their normal operating locations.
- If an electrical accident occurs, use caution, turn off the power, and send another person to get medical aid.

Safety statements

These statements provide the caution and danger information that is used in this documentation.

Important:

Each caution and danger statement in this documentation is labeled with a number. This number is used to cross reference an English-language caution or danger statement with translated versions of the caution or danger statement in the *Safety Information* document.

For example, if a caution statement is labeled “Statement 1,” translations for that caution statement are in the *Safety Information* document under “Statement 1.”

Be sure to read all caution and danger statements in this documentation before you perform the procedures. Read any additional safety information that comes with your system or optional device before you install the device.

Statement 1

DANGER

Electrical current from power, telephone, and communication cables is hazardous.

To avoid a shock hazard:

- **Do not connect or disconnect any cables or perform installation, maintenance, or reconfiguration of this product during an electrical storm.**
- **Connect all power cords to a properly wired and grounded electrical outlet.**
- **Connect to properly wired outlets any equipment that will be attached to this product.**
- **When possible, use one hand only to connect or disconnect signal cables.**
- **Never turn on any equipment when there is evidence of fire, water, or structural damage.**
- **Disconnect the attached power cords, telecommunications systems, networks, and modems before you open the device covers, unless instructed otherwise in the installation and configuration procedures.**
- **Connect and disconnect cables as described in the following table when installing, moving, or opening covers on this product or attached devices.**

To Connect:	To Disconnect:
1. Turn everything OFF.	1. Turn everything OFF.
2. First, attach all cables to devices.	2. First, remove power cords from outlet.
3. Attach signal cables to connectors.	3. Remove signal cables from connectors.
4. Attach power cords to outlet.	4. Remove all cables from devices.
5. Turn device ON.	

Statement 2

CAUTION:
When replacing the lithium battery, use only IBM Part Number 33F8354 or an equivalent type battery recommended by the manufacturer. If your system has a module containing a lithium battery, replace it only with the same module type made by the same manufacturer. The battery contains lithium and can explode if not properly used, handled, or disposed of.

Do not:

- **Throw or immerse into water**
- **Heat to more than 100°C (212°F)**
- **Repair or disassemble**

Dispose of the battery as required by local ordinances or regulations.

Statement 12

CAUTION:
The following label indicates a hot surface nearby.

Statement 21

CAUTION:
Hazardous energy is present when the blade is connected to the power source. Always replace the blade cover before installing the blade.

UL regulatory information

This device is for use only with Listed IBM Flex System Enterprise Chassis.

Chapter 1. Introduction

The IBM Flex System x440 Compute Node Types 7917 and 2584 is a high-availability, scalable compute node that is optimized to support the next-generation microprocessor technology and is ideally suited for medium and large businesses.

The IBM Flex System x440 Compute Node is supported in the IBM Flex System Enterprise Chassis only.

This documentation provides the following information about setting up and troubleshooting the compute node:
- Starting and configuring the compute node
- Installing the operating system
- Diagnosing problems
- Installing, removing, and replacing components

Packaged with the compute node are software CDs that help you configure hardware, install device drivers, and install the operating system.

To download the latest firmware and device drivers, go to http://www.ibm.com/support/fixcentral/ and select **PureSystems, PureFlex System, Compute Node** and **x440 Compute Node.**

The compute node comes with a limited warranty. For information about the terms of the warranty and getting service and assistance, see the *Warranty Information* document for your compute node. This document is available on the IBM *Documentation* CD.

You can obtain up-to-date information about the compute node at http://www.ibm.com/systems/.

The compute node might have features that are not described in the documentation that comes with the compute node. The documentation might be updated occasionally to include information about those features. Technical updates might also be available to provide additional information that is not included in the compute node documentation. To obtain the most up-to-date documentation for this product, go to http://publib.boulder.ibm.com/infocenter/flexsys/information/index.jsp.

You can subscribe to information updates that are specific to your compute node at http://www.ibm.com/support/mynotifications/.

The model number and serial number are on the ID label on the bezel on the front of the compute node, and on a label on the bottom of the compute node that is visible when the compute node is not in the IBM Flex System chassis. If the compute node comes with an RFID tag, the RFID tag covers the ID label on the bezel on the front of the compute node but you can open the RFID tag to see the ID label behind it.

Note: The illustrations in this document might differ slightly from your hardware.

© Copyright IBM Corp. 2012

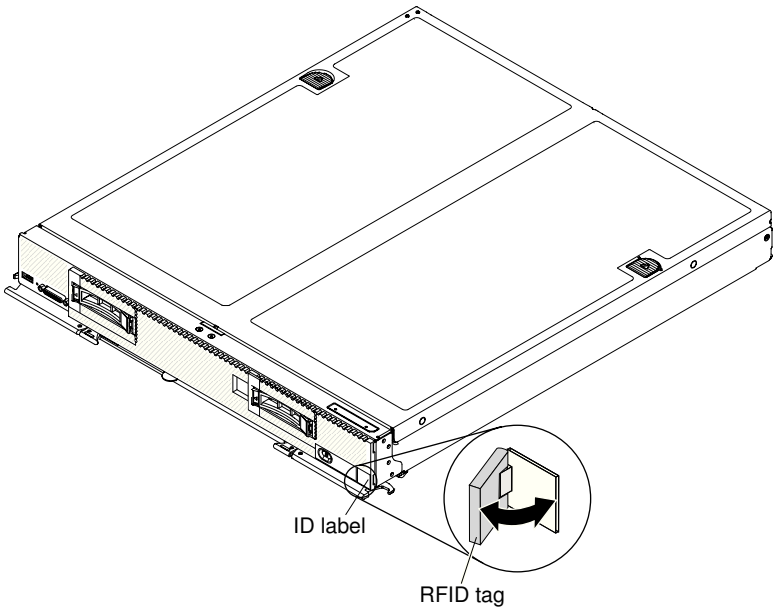

Related documentation

Use this information to identify and locate related compute node documentation.

This *Installation and Service Guide* contains general information about the compute node, including how to install supported optional devices and how to configure the compute node. It also contains information to help you solve problems yourself and instructions for removing and installing components, and it contains information for service technicians. Documents that are in Portable Document Format (PDF) are on the IBM *Documentation* CD. The following documentation is also available.

- *Safety Information*

  This document is in PDF. It contains translated caution and danger statements. Each caution and danger statement that appears in the documentation has a number that you can use to locate the corresponding statement in your language in the *Safety Information* document.
- *IBM Warranty Information*

  This printed document contains the warranty terms and a pointer to the IBM Statement of Limited Warranty on the IBM website.
- *Environmental Notices and User Guide*

  This document is in PDF. It contains translated environmental notices.
- *IBM License Agreement for Machine Code*

  This document is in PDF. It provides translated versions of the IBM License Agreement for Machine code for your compute node.
- *Licenses and Attributions Document*

  This document is in PDF. It provides information about the open-source notices.

In addition to the documentation in this library, be sure to review the *Installation and Service Guide* for your IBM Flex System chassis for information to help you prepare for system installation and configuration.

To check for updated documentation, go to http://www.ibm.com/supportportal/.

You can also find documentation that is related to IBM Flex System products at http://publib.boulder.ibm.com/infocenter/flexsys/information/index.jsp.

The IBM Documentation CD

The IBM *Documentation* CD contains documentation for the compute node in Portable Document Format (PDF). It includes the IBM Documentation Browser to help you find information quickly.

You can run the IBM *Documentation* CD on any computer that meets the hardware and software requirements.

Hardware and software requirements

Use this information to determine the minimum hardware and software requirements.

The IBM *Documentation* CD requires the following minimum hardware and software:

- Microsoft Windows
- 100 MHz microprocessor
- 32 MB of RAM
- Adobe Acrobat Reader 3.0 (or later) or xpdf, which comes with Linux operating systems

Using the Documentation Browser

Use this information to start the Documentation Browser.

Use the Documentation Browser to browse the contents of the CD, read brief descriptions of the documents, and view documents, using Adobe Acrobat Reader or xpdf. The Documentation Browser automatically detects the regional settings in use in your system and displays the documents in the language for that region (if available). If a document is not available in the language for that region, the English-language version is displayed.

Use one of the following procedures to start the Documentation Browser:

- If Autostart is enabled, insert the CD into the CD or DVD drive. The Documentation Browser starts automatically.
- If Autostart is disabled or is not enabled for all users, use one of the following procedures:
  - If you are using a Windows operating system, insert the CD into the CD or DVD drive and click **Start → Run**. In the **Open** field, type

    ```
    e:\win32.bat
    ```

    where *e* is the drive letter of the CD or DVD drive, and click **OK**.
  - If you are using Red Hat Linux, insert the CD into the CD or DVD drive; then, run the following command from the /mnt/cdrom directory:

    ```
    sh runlinux.sh
    ```

Select the compute node from the **Product** menu. The **Available Topics** list displays all the documents for the compute node. Some documents might be in folders. A plus sign (+) indicates each folder or document that has additional documents under it. Click the plus sign to display the additional documents.

When you select a document, a description of the document is displayed under **Topic Description**. To select more than one document, press and hold the Ctrl key while you select the documents. Click **View Book** to view the selected document or documents in Acrobat Reader or xpdf. If you selected more than one document, all the selected documents are opened in Acrobat Reader or xpdf.

To search all the documents, type a word or word string in the **Search** field and click **Search**. The documents in which the word or word string appears are listed in order of the most occurrences. Click a document to view it. Press Ctrl+F to use the Acrobat search function, or press Alt+F to use the xpdf search function within the document.

Click **Help** for detailed information about using the Documentation Browser.

Notices and statements in this document

Use this information to understand the most common documentation notices and statements and how they are used.

The caution and danger statements in this document are also in the multilingual *Safety Information* document, which is on the IBM *Documentation* CD. Each statement is numbered for reference to the corresponding statement in the *Safety Information* document.

The following notices and statements are used in this document:

- **Note:** These notices provide important tips, guidance, or advice.
- **Important:** These notices provide information or advice that might help you avoid inconvenient or problem situations.
- **Attention:** These notices indicate possible damage to programs, devices, or data. An attention notice is placed just before the instruction or situation in which damage might occur.
- **Caution:** These statements indicate situations that can be potentially hazardous to you. A caution statement is placed just before the description of a potentially hazardous procedure step or situation.
- **Danger:** These statements indicate situations that can be potentially lethal or hazardous to you. A danger statement is placed just before the description of a potentially lethal or hazardous procedure step or situation.

Features and specifications

Use this information to view specific information about the compute node, such as compute node hardware features and the dimensions of the compute node.

Notes:

1. Power, cooling, and chassis systems management are provided by the IBM Flex System chassis.
2. The operating system in the compute node must provide USB support for the compute node to recognize and use USB media drives and devices.

The following table is a summary of the features and specifications of the IBM Flex System x440 computer node.

Table 1. Features and specifications

Microprocessor: One, two or four multi-core Intel Xeon microprocessors. **Notes:** 1. Use the Setup utility to determine the type and speed of the microprocessors in the compute node. 2. Configurations with three installed microprocessors are not supported. **Note:** **Integrated functions:** • Renesas SH7757 (IMM2) baseboard management controller (BMC) with integrated VGA controller • (Models with LAN-on-motherboard (LOM) only) Two LOM Periscope connectors • (Models with LOM only) Two Emulex BE3 dual-port 10 Gigabit Ethernet controller • Support for up to two internal USB ports • One external USB port • One LSI 2004 SAS controller with support for RAID level-0 or RAID level-1 • Light path diagnostics • Automatic server restart (ASR) • One Resesas H8S2117 Real Time Management Module (RTMM) • One Xilinx Spartan 6 Field Programmable Gate Array (FPGA) • Four Fabric Mezzanine connectors • One ETE connector in the Mezzanine 5 location • Concurrent keyboard/video/mouse (cKVM) • Serial over LAN (SOL) • Wake on LAN (WOL)	**Upgradeable firmware:** All firmware is field upgradeable. **Memory:** • 48 dual inline memory module (DIMM) connectors • Type: Low-profile (LP) double-data rate (DDR3) DRAM • Supports 4 GB, 8 GB, 16 GB and 32 GB DIMMs with up to 1536 GB of total memory on the system board • Support for RDIMMs and LRDIMMs (combining is not supported) **Predictive Failure Analysis (PFA) alerts:** • Microprocessors • Memory • Hard disk drives **Drives:** Supports up to two hot-swap, small form factor (SFF) Serial Attached SCSI (SAS) or Serial ATA (SATA) hard disk drives. **Size:** • Height: 55.5 mm (2.19 in) • Depth: 492.7 mm (19.4 in) • Width: 435.3 mm (17.14 in) • Maximum weight: 12.25 kg (27 lbs)	**Environment:** The IBM Flex System x440 Compute Node complies with ASHRAE class A3 specifications. • Power on[1]: – Temperature: 5°C - 40°C (41°F - 104°F) up to 950m (3,117ft)[3] – Humidity, non-condensing: -12°C dew point (10.4°F) and 8% - 85% relative humidity[5,6] – Maximum dew point: 24°C (75°F) – Maximum altitude: 3048 m (10,000 ft) – Maximum rate of temperature change: 5°C/hr (41°F/hr)[4] • Power off[2]: – Temperature: 5°C to 45°C (41°F - 113°F) – Relative humidity: 8% - 85% – Maximum dew point: 27°C (80.6°F) • Storage (non-operating): – Temperature: 1°C to 60°C (33.8°F - 140°F) – Altitude: 3050 m (10,006 ft) – Relative humidity: 5% - 80% – Maximum dew point: 29°C (84.2°F) • Shipment (non-operating)[7]: – Temperature: -40°C to 60°C (-40°F - 140°F) – Altitude: 10,700 m (35,105 ft) – Relative humidity: 5% - 100% – Maximum dew point: 29°C (84.2°F)[8] • Particulate contamination **Attention:** Airborne particulates and reactive gases acting alone or in combination with other environmental factors such as humidity or temperature might pose a risk to the compute node. For information about the limits for particulates and gases, see "Particulate contamination" on page 561.

Table 1. Features and specifications (continued)

1. Compute Node powered on.
2. Compute Node is removed from original shipping container and is installed but not in use, for example, during repair, maintenance, or upgrade.
3. A3 - Derate maximum allowable temperature 1°C/175 m above 950 m. At maximum altitude of 3,050m (10kft) maximum air temperature is 28°C (82°F)
4. 5°C/hr for data centers employing tape drives and 20°C/hr for data centers employing disk drives.
5. The minimum humidity level for class A3 is the higher (more moisture) of the -12 °C dew point and the 8% relative humidity. These intersect at approximately 25°C. Below this intersection (~25C), the dew point (-12 °C) represents the minimum moisture level; above the intersection, relative humidity (8%) is the minimum.
6. Moisture levels lower than 0.5°C DP, but not lower -10 °C DP or 8% relative humidity, can be accepted if appropriate control measures are implemented to limit the generation of static electricity on personnel and equipment in the data center. All personnel and mobile furnishings and equipment must be connected to ground via an appropriate static control system. The following items are considered the minimum requirements:
   a. Conductive materials (conductive flooring, conductive footwear on all personnel who go into the datacenter; all mobile furnishings and equipment will be made of conductive or static dissipative materials).
   b. During maintenance on any hardware, a properly functioning wrist strap must be used by any personnel who contacts IT equipment.
7. The equipment acclimation period is 1 hour per 20°C of temperature change from the shipping environment to the operating environment.
8. Condensation is acceptable, but not rain.
9. The fully configured chassis weight is based on all nodes and I/O modules being at their maximum design limit.

What your compute node offers

Your compute node offers features such as the integrated management module 2, hard disk drive support, systems-management support, microprocessor technology, integrated network support, I/O expansion, large system-memory capacity, light path diagnostics LEDs, PCI Express®, and power throttling.

- **Features on Demand**

  If a Features on Demand feature is integrated in the compute node or in an optional device that is installed in the compute node, you can purchase an activation key to activate the feature. For information about Features on Demand, see http://www.ibm.com/systems/x/fod/.

- **Dynamic System Analysis (DSA)**

  IBM Dynamic System Analysis (DSA) collects and analyzes system information to aid in diagnosing compute node problems. DSA collects the following information about the compute node:

  – Drive health information
  – Event logs for ServeRAID controllers and service processors
  – Hardware inventory, including PCI and USB information
  – Installed applications and hot fixes
  – Kernel modules
  – Light path diagnostics status
  – Network interfaces and settings
  – Performance data and details about processes that are running
  – RAID and controller configuration
  – Integrated management module 2 status and configuration
  – System configuration

– Vital product data and firmware information

DSA creates a DSA log, which is a chronologically ordered merge of the system-event log (as the IPMI event log), the IMM event log (as the ASM event log), and the operating-system event logs. You can send the DSA log as a file to a support representative or view the information as a text file or HTML file.

For more information, see "IBM Dynamic System Analysis Preboot diagnostic program" on page 65.

- **Flexible network support**

  The compute node provides flexible network capabilities:

  – **Models with embedded virtual fabric:** The integrated Emulex BE3 dual-port 10 Gigabit Ethernet controller supports connections to a 10 Mbps, 100 Mbps, or 1000 Mbps network through an Ethernet-compatible switch module in the chassis. The controller supports connections at 10 Gb. The controller also supports Wake on LAN® technology. You can install an additional I/O expansion adapter for network support.

  – **Models without embedded virtual fabric:** The compute node has connectors on the system board for optional expansion adapters for adding network communication capabilities to the compute node. You can install up to two I/O expansion adapters for network support. This provides the flexibility to install expansion adapters that support a variety of network communication technologies.

- **Hard disk drive support**

  The compute node supports up to two hot-swap hard disk drives. You can implement RAID 0 or RAID 1 for the drives.

- **IBM *ServerGuide Setup and Installation* CD**

  The *ServerGuide Setup and Installation* CD, which you can download from the web, provides programs to help you set up the compute node and install a Windows operating system. The ServerGuide program detects installed optional hardware devices and provides the correct configuration programs and device drivers. For more information, see "Using the ServerGuide Setup and Installation CD" on page 40.

- **Integrated management module II (IMM2)**

  The integrated management module II (IMM2) combines systems-management functions, video controller, the remote presence, and blue-screen capture features in a single chip. The IMM2 provides advanced systems-management control, monitoring, and alerting function. If an environmental condition exceeds a threshold or if a system component fails, the IMM2 lights LEDs to help you diagnose the problem, records the error in the IMM event log, and alerts you to the problem.

  Optionally, the IMM2 also provides a virtual presence capability for remote systems management capabilities. The IMM2 provides remote systems management through industry-standard interfaces:

  – Common Information Model (CIM)

  – Intelligent Platform Management Interface (IPMI) version 2.0

  – Simple Network Management Protocol (SNMP) version 3.0

  – Web browser

  For more information, see Chapter 4, "Accessing the IMM2," on page 43.

- **Large system-memory capacity**

  The compute node supports up to 1536 GB of system memory. The memory controller provides support for up to 48 industry-standard registered ECC DDR3

on low-profile (LP) DIMMs on the system board. For the most current list of supported DIMMs, see http://www.ibm.com/systems/info/x86servers/serverproven/compat/us/.

- **Light path diagnostics**

  Light path diagnostics provides light-emitting diodes (LEDs) to help you diagnose problems. For more information, see "Light path diagnostics" on page 57.

- **Microprocessor technology**

  The compute node supports up to four multi-core Intel Xeon microprocessors. For more information about supported microprocessors and their part numbers, see Chapter 5, "Parts listing, Types 7917 and 2584," on page 51.

  Note: The optional microprocessors that IBM supports are limited by the capacity and capability of the compute node. Any microprocessor that you install must have the same specifications as the microprocessor that came with the compute node.

- **PCI Express**

  PCI Express is a serial interface that is used for chip-to-chip interconnect and expansion adapter interconnect. You can add optional I/O and storage devices.

- **Power throttling**

  By enforcing a power policy known as power-domain oversubscription, the IBM Flex System chassis can share the power load between two or more power supply modules to ensure sufficient power for each device in the IBM Flex System chassis. This policy is enforced when the initial power is applied to the IBM Flex System chassis or when a compute node is inserted into the IBM Flex System chassis.

  The following settings for this policy are available:

  – Basic power management
  – Power module redundancy
  – Power module redundancy with compute node throttling allowed

  You can configure and monitor the power environment by using the Chassis Management Module. For more information, see the "IBM Flex System Chassis Management Module: Command-Line Interface Reference Guide" at http://ralfss21.raleigh.ibm.com:8099/help/topic/com.ibm.acc.cmm.doc/cmm_cli_guide.html.

- **Systems-management support**

  The compute node IMM2 provides a Web interface for remote systems-management support. You can use the interface to view system status, and control server management functions and IMM management settings.

  The IMM2 communicates with the IBM Flex System Chassis Management Module (CMM) and IBM Flex System Manager management software (if installed).

  – CMM is a hot-swap module that provides system-management functions for all components in an IBM Flex System chassis. It controls a serial port for remote connection and a 1 Gbps Ethernet remote-management connection. For more information, see the "IBM Flex System Chassis Management Module: Command-Line Interface Reference Guide" at http://ralfss21.raleigh.ibm.com:8099/help/topic/com.ibm.acc.cmm.doc/cmm_cli_guide.html.
  – IBM Flex System Manager management software is a platform-management foundation that streamlines the way you manage physical and virtual systems

in a heterogeneous environment. By using industry standards, IBM Flex System Manager management software supports multiple operating systems and virtualization technologies. For more information, see the "IBM Flex System Manager Software: Installation and Service Guide" at http://ralfss21.raleigh.ibm.com:8099/help/topic/com.ibm.acc.8731.doc/product_page.html.

Reliability, availability, and serviceability features

Three of the most important features in compute node design are reliability, availability, and serviceability (RAS). These RAS features help to ensure the integrity of the data that is stored in the compute node, the availability of the compute node when you need it, and the ease with which you can diagnose and correct problems.

The compute node has the following RAS features:

- 24-hour support center
- Advanced Configuration and Power Interface (ACPI)
- Automatic server restart (ASR)
- Built-in diagnostics using DSA Preboot
- Built in monitoring for temperature, voltage, and hard disk drives
- Customer support center 24 hours per day, 7 days a week[1]
- Customer upgrade of flash ROM-resident code and diagnostics
- Customer-upgradeable Unified Extensible Firmware Interface (UEFI) code and diagnostics
- ECC protected DDR3 DIMMs
- ECC protection on the L2 cache
- Error codes and messages
- Integrated management module II (IMM2) that communicates with the Chassis Management Module to enable remote systems management
- Light path diagnostics
- Memory mirroring mode support
- Microprocessor built-in self-test (BIST) during power-on self-test (POST)
- Microprocessor Intel QuickPath Interconnect bus and CRC checking
- Microprocessor serial number access
- PCI bus even parity checking
- POST
- Power policy
- Processor presence detection
- Rank-sparing mode support
- ROM-resident diagnostics
- System-error logging
- Vital product data (VPD) on memory
- Wake on LAN capability
- Wake on PCI (PCIe Expansion Node) capability

Major components of the compute node

Use this information to locate the major components on the compute node. The major components of the compute node include field replaceable units (FRUs), customer replaceable units (CRUs), and optional devices.

The following illustration shows the major components of the compute node.

1. Service availability varies by country. Response time varies depending on the number and nature of incoming calls.

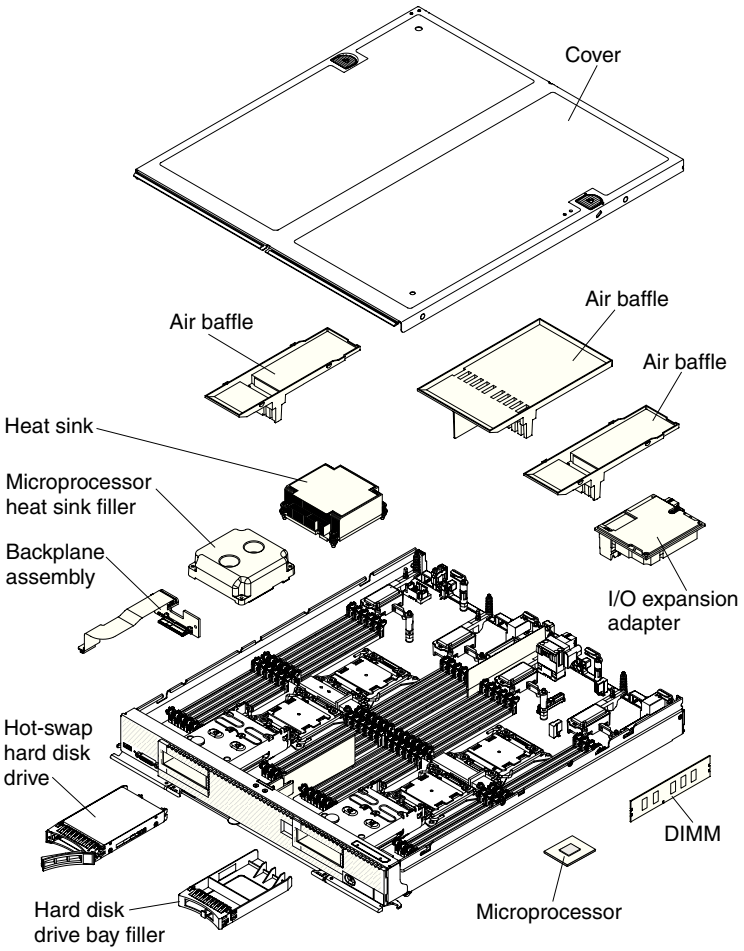

Power, controls, and indicators

Use this information to view power features, turn on and turn off the compute node, and view the functions of the controls and indicators.

Compute node controls, connectors, and LEDs

Use this information for details about the controls, connectors, and LEDs.

The following illustration identifies the buttons, connectors, and LEDs on the control panel.

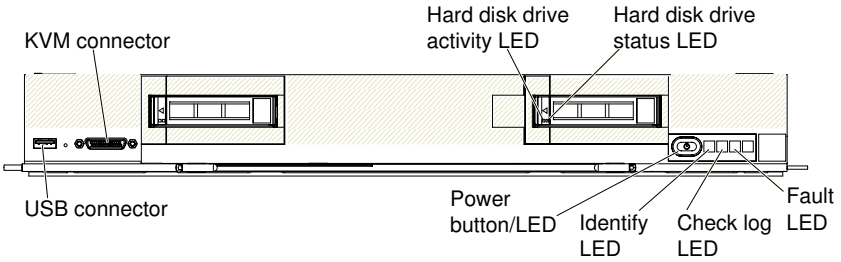

Fault LED

When this yellow LED is lit, it indicates that a system error has occurred in

the compute node. In addition, the fault LED on the chassis system LED panel is lit. You can check the CMM event log to determine the source of the condition. For more information, see “Viewing event logs without restarting the compute node” on page 64“Viewing event logs without restarting the compute node” on page 56. See “Light path diagnostics LEDs” on page 59 for more information about the LEDs on the compute node.

The fault LED turns off only after the error is corrected.

Note: When the fault LED turns off, you should also clear the IMM event log. Use the Setup utility to clear the IMM event log.

Check log LED

When this yellow LED is lit, it indicates that a condition that causes an event to be logged in the event log has occurred. To view the IMM2 event log see “IMM event log” on page 63

The check log LED can be turned off through the CMM **led** command, the CMM web interface, or IBM Flex System Manager management software (if installed).

- For more information about the CMM **led** command, see the "IBM Flex System Chassis Management Module: Command-Line Interface Reference Guide" at http://ralfss21.raleigh.ibm.com:8099/help/topic/com.ibm.acc.cmm.doc/cli_command_led.html.
- From the CMM web interface, select **Compute Nodes** from the **Chassis Management** menu. For more information, see the "IBM Flex System Chassis Management Module: User's Guide" athttp://publib.boulder.ibm.com/infocenter/flexsys/information/topic/com.ibm.acc.cmm.doc/cmm_user_guide.html. All fields and options are described in the CMM web interface online help.
- For more information about IBM Flex System Manager management software, see the "IBM Flex System Manager Software: Installation and Service Guide" at http://ralfss21.raleigh.ibm.com:8099/help/topic/com.ibm.acc.8731.doc/product_page.html.

Notes:

1. Alternatively, you can use the **CMM_INDICATES_ITE_ERROR_N** command to light the check log LED. See the "IBM Flex System Chassis Management Module: Command-Line Interface Reference Guide" at http://ralfss21.raleigh.ibm.com:8099/help/topic/com.ibm.acc.cmm.doc/cmm_cli_guide.html for more information.
2. You can check the CMM event log to determine the source of the condition. For more information, see “Viewing event logs without restarting the compute node” on page 64.

Identify LED

The system administrator can remotely light this blue LED to aid in visually locating the compute node. When this LED is lit, the identify LED on the IBM Flex System chassis is also lit. The identify LED can be lit and turned off through the CMM **led** command, the CMM web interface, or IBM Flex System Manager management software (if installed).

- For more information about the CMM **led** command, see the "IBM Flex System Chassis Management Module: Command-Line Interface Reference Guide" at http://ralfss21.raleigh.ibm.com:8099/help/topic/com.ibm.acc.cmm.doc/cli_command_led.html.

- From the CMM web interface, select **Compute Nodes** from the **Chassis Management** menu. For more information, see the "IBM Flex System Chassis Management Module: User's Guide" at http://publib.boulder.ibm.com/infocenter/flexsys/information/topic/com.ibm.acc.cmm.doc/cmm_user_guide.html. All fields and options are described in the CMM web interface online help.
- For more information about IBM Flex System Manager management software, see the "IBM Flex System Manager Software: Installation and Service Guide" at http://ralfss21.raleigh.ibm.com:8099/help/topic/com.ibm.acc.8731.doc/product_page.html.

Power button/LED

When the compute node is connected to power through the IBM Flex System chassis, press this button to turn on or turn off the compute node.

Note: The power button works only if local power control is enabled for the compute node. Local power control is enabled and disabled through the CMM **power** command and the CMM web interface.

- For more information about the CMM **power** command, see the "IBM Flex System Chassis Management Module: Command-Line Interface Reference Guide" at http://ralfss21.raleigh.ibm.com:8099/help/topic/com.ibm.acc.cmm.doc/cli_command_power.html.
- From the CMM web interface, select **Compute Nodes** from the **Chassis Management** menu. For more information, see the "IBM Flex System Chassis Management Module: User's Guide" at http://publib.boulder.ibm.com/infocenter/flexsys/information/topic/com.ibm.acc.cmm.doc/cmm_user_guide.html. All fields and options are described in the CMM web interface online help.

After the compute node is removed from the chassis, press and hold this button to activate the system-board LEDs (light path diagnostics). See “Compute node controls, connectors, and LEDs” on page 10 for more information.

This button is also the power LED. This green LED indicates the power status of the compute node:

- **Flashing rapidly**: The LED flashes rapidly for one of the following reasons:
  - The compute node has been installed in a chassis. When you install the compute node, the LED flashes rapidly for up to 90 seconds while the integrated management module II (IMM2) in the compute node is initializing and synchronizing with the chassis management module.
  - Power permissions have not been assigned to the compute node through the Chassis Management Module.
  - The IBM Flex System chassis does not have enough power to turn on the compute node.
  - The IMM2 in the compute node is not communicating with the Chassis Management Module.
- **Flashing slowly**: The compute node is connected to power through the chassis and is ready to be turned on.
- **Lit continuously**: The compute node is connected to power through the chassis and is turned on.

When the compute node is on, pressing this button causes an orderly shutdown of the compute node so that it can be removed safely from the

chassis. This includes shutting down the operating system (if possible) and removing power from the compute node.

If an operating system is running, you might have to press the button for approximately 4 seconds to initiate the shutdown.

Attention: Pressing the button for 4 seconds forces the operating system to shut down immediately. Data loss is possible.

NMI button
The NMI button is recessed and can be accessed only by using a small pointed device. Pressing this button causes a nonmaskable interrupt for debugging purposes.

KVM connector
Connect the console breakout cable to this connector (see "Console breakout cable" for more information).

USB connector
Connect a USB device to this connector.

Console breakout cable

Use this information for details about the console breakout cable.

Use the console breakout cable to connect external I/O devices to the compute node. The console breakout cable connects through the KVM connector (see "Compute node controls, connectors, and LEDs" on page 10). The console breakout cable has connectors for a display device (video), two USB connectors for a USB keyboard and mouse, and a serial interface connector.

The following illustration identifies the connectors and components on the console breakout cable.

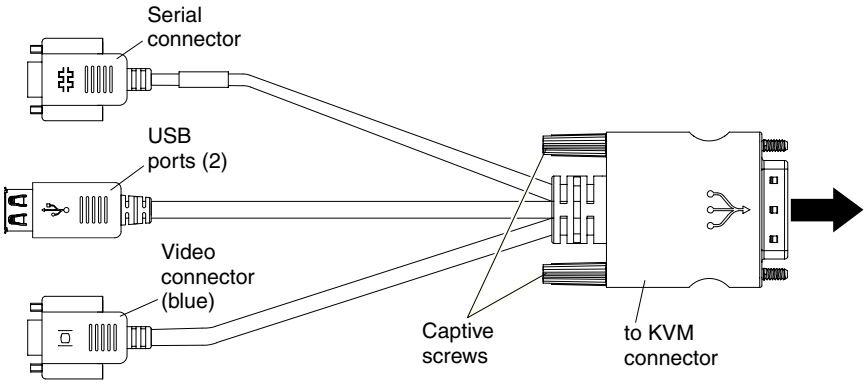

Turning on the compute node

Use this information for details about turning on the compute node.

About this task

After you connect the compute node to power through the IBM Flex System chassis, the compute node can be started in any of the following ways:

- You can press the power button on the front of the compute node (see "Compute node controls, connectors, and LEDs" on page 10) to start the compute node. The power button works only if local power control is enabled

for the compute node. Local power control is enabled and disabled through the CMM **power** command and the CMM web interface.

- For more information about the CMM **power** command, see the "IBM Flex System Chassis Management Module: Command-Line Interface Reference Guide" at http://ralfss21.raleigh.ibm.com:8099/help/topic/com.ibm.acc.cmm.doc/cli_command_power.html.
- From the CMM web interface, select **Compute Nodes** from the Chassis Management menu. For more information, see the "IBM Flex System Chassis Management Module: User's Guide" at http://publib.boulder.ibm.com/infocenter/flexsys/information/topic/com.ibm.acc.cmm.doc/cmm_user_guide.html. All fields and options are described in the CMM web interface online help.

Notes:

1. Wait until the power LED on the compute node flashes slowly before you press the power button. While the IMM2 in the compute node is initializing and synchronizing with the Chassis Management Module, the power LED flashes rapidly, and the power button on the compute node does not respond. This process can take approximately 90 seconds after the compute node has been installed.
2. While the compute node is starting, the power LED on the front of the compute node is lit and does not flash. See “Compute node controls, connectors, and LEDs” on page 10 for the power LED states.

- If a power failure occurs, the IBM Flex System chassis and the compute node can be configured through the CMM **power** command and the CMM web interface to start automatically when power is restored.
  - For more information about the CMM **power** command, see the "IBM Flex System Chassis Management Module: Command-Line Interface Reference Guide" at http://ralfss21.raleigh.ibm.com:8099/help/topic/com.ibm.acc.cmm.doc/cli_command_power.html.
  - From the CMM web interface, select **Compute Nodes** from the **Chassis Management** menu. For more information, see the "IBM Flex System Chassis Management Module: User's Guide" at http://publib.boulder.ibm.com/infocenter/flexsys/information/topic/com.ibm.acc.cmm.doc/cmm_user_guide.html. All fields and options are described in the CMM web interface online help.
- You can turn on the compute node through the CMM **power** command, the CMM web interface, or IBM Flex System Manager management software if installed.
  - For more information about the CMM **power** command, see the "IBM Flex System Chassis Management Module: Command-Line Interface Reference Guide" at http://ralfss21.raleigh.ibm.com:8099/help/topic/com.ibm.acc.cmm.doc/cli_command_power.html.
  - From the CMM web interface, select **Compute Nodes** from the **Chassis Management** menu. For more information, see the "IBM Flex System Chassis Management Module: User's Guide" at http://publib.boulder.ibm.com/infocenter/flexsys/information/topic/com.ibm.acc.cmm.doc/cmm_user_guide.html. All fields and options are described in the CMM web interface online help.
  - For more information about IBM Flex System Manager management software, see the "IBM Flex System Manager Software: Installation and Service Guide" at http://ralfss21.raleigh.ibm.com:8099/help/topic/com.ibm.acc.8731.doc/product_page.html.

- You can turn on the computer node through the Wake on LAN feature. The computer node must be connected to power (the power LED is flashing slowly) and must be communicating with the Chassis Management Module. The operating system must support the Wake on LAN feature, and the Wake on LAN feature must be enabled through the Chassis Management Module interface.

Turning off the compute node

Use this information for details about turning off the compute node.

About this task

When you turn off the compute node, it is still connected to power through the IBM Flex System chassis. The compute node can respond to requests from the IMM2, such as a remote request to turn on the compute node. To remove all power from the compute node, you must remove it from the IBM Flex System chassis.

Before you turn off the compute node, shut down the operating system. See the operating-system documentation for information about shutting down the operating system.

The compute node can be turned off in any of the following ways:

- The compute node can turn off automatically as part of the operating system shutdown process (if this feature is supported by the operating system). See your operating-system documentation for more information.
- You can press the power button on the compute node (see “Compute node controls, connectors, and LEDs” on page 10). This starts an orderly shutdown of the operating system, if this feature is supported by the operating system.
- If the operating system stops functioning, you can press and hold the power button for more than 4 seconds to turn off the compute node.

  Attention: Pressing the power button for 4 seconds forces the operating system to shut down immediately. Data loss is possible.
- You can turn off the compute node through the CMM **power** command, the CMM web interface, or IBM Flex System Manager management software (if installed).
  - For more information about the CMM **power** command, see the "IBM Flex System Chassis Management Module: User's Guide" at http://publib.boulder.ibm.com/infocenter/flexsys/information/topic/com.ibm.acc.cmm.doc/cmm_user_guide.html.
  - From the CMM web interface, select **Compute Nodes** from the **Chassis Management** menu. For more information, see the "IBM Flex System Chassis Management Module: User's Guide" at http://publib.boulder.ibm.com/infocenter/flexsys/information/topic/com.ibm.acc.cmm.doc/cmm_user_guide.html. All fields and options are described in the CMM web interface online help.
  - For more information about IBM Flex System Manager management software, see the "IBM Flex System Manager Software: Installation and Service Guide" at http://publib.boulder.ibm.com/infocenter/flexsys/information/topic/com.ibm.acc.8731.doc/product_page.html

System-board layouts

Use this information to locate the connectors, LEDs, jumpers, and switches on the system board.

System-board connectors

Use this information to locate compute node system-board components and connectors for optional devices.

The following illustration shows the system-board components, including connectors for user-installable optional devices, in the compute node.

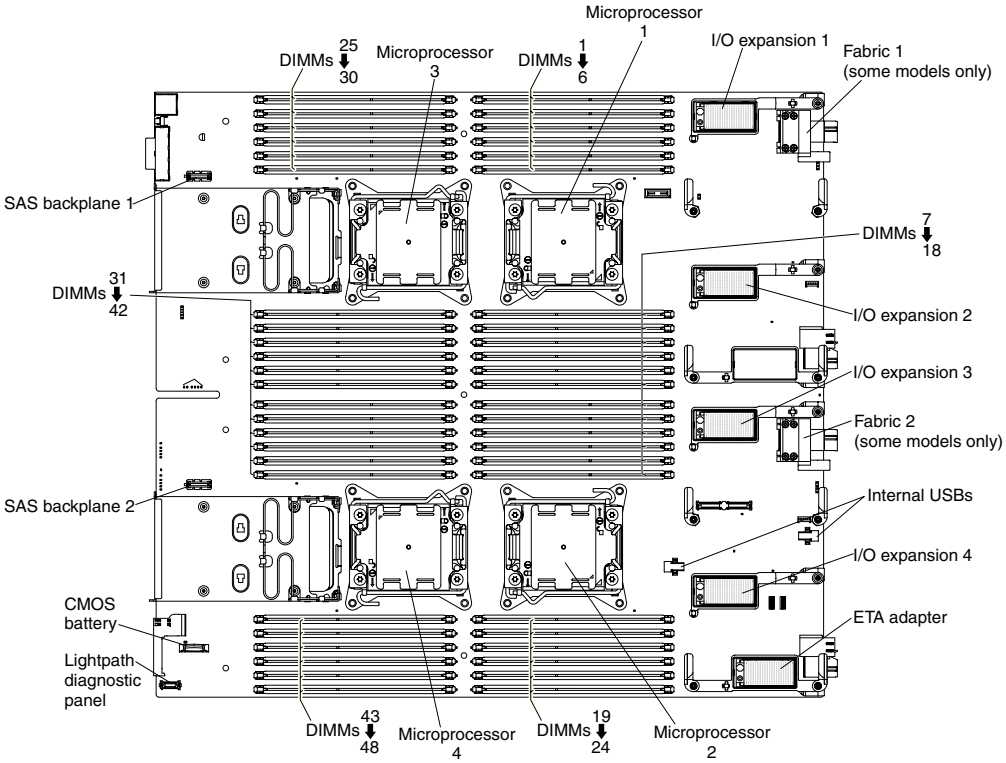

System-board jumpers

Use this information to locate the system-board jumpers.

The following illustration shows the locations of the jumpers on the system board.

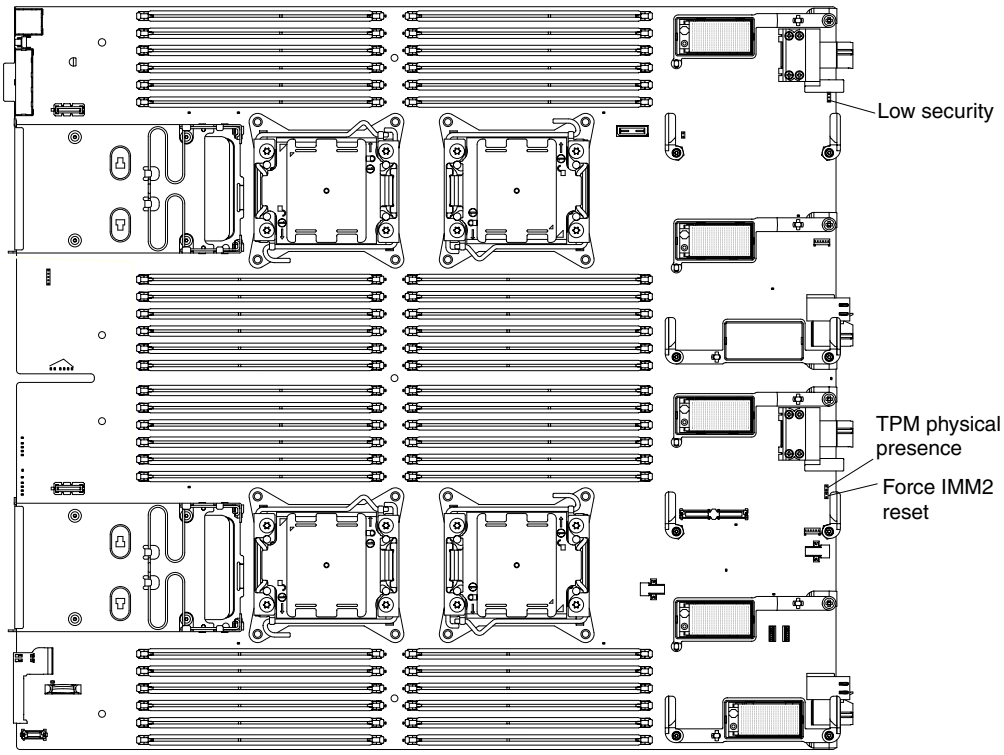

The following table describes the function of each jumper on the system board.

Jumper number	Description
Force IMM Reset (J12)	For debug purposes only.
Low Security (J9101)	Three-pin jumper block. The default position are pins 2 and 3 (allow only signed IMM2 to be flashed). Move the jumper to pins 1 and 2 to to remove the security check (low security).
Trusted Platform Module (TPM) physical presence (J6)	Two-pin jumper. The dwfault is no jumper. Place a jumper on pins 1 and 2 to indicate a physical presence to the IMM2 TPM chip.

System-board LEDs

The following illustration shows the location of the LEDs on the system board.

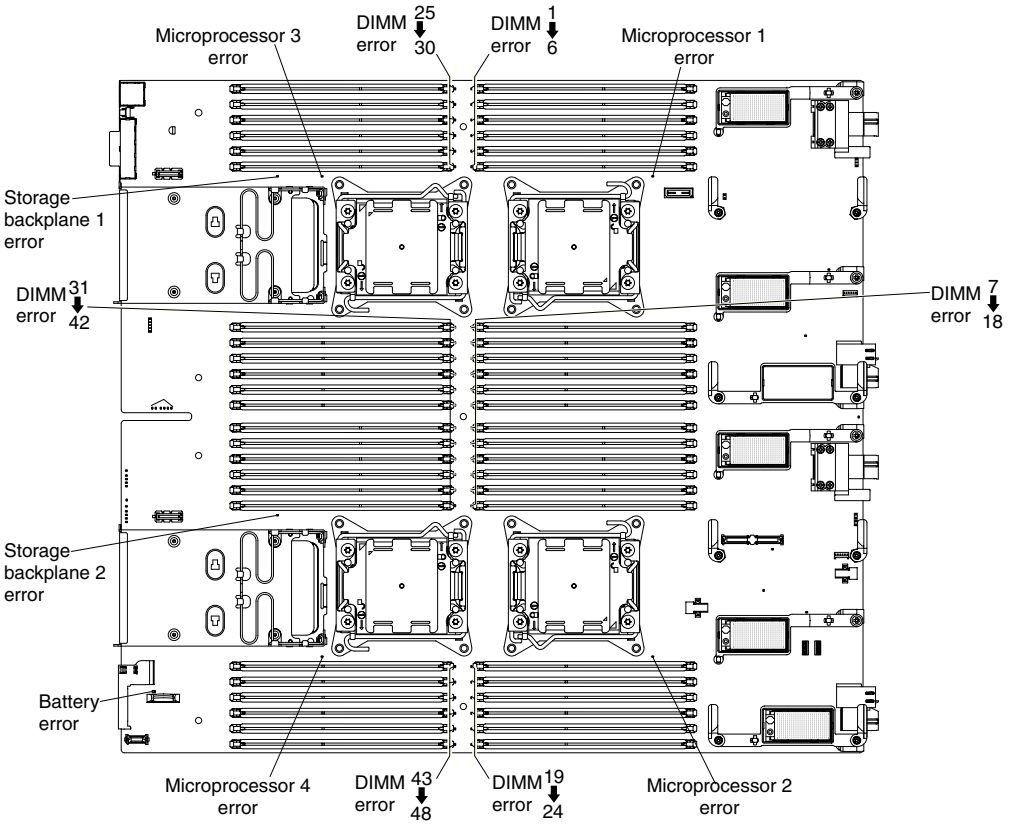

System-board switches

Use this information to locate the system-board switches.

The following illustration shows the location of the switch block on the system board.

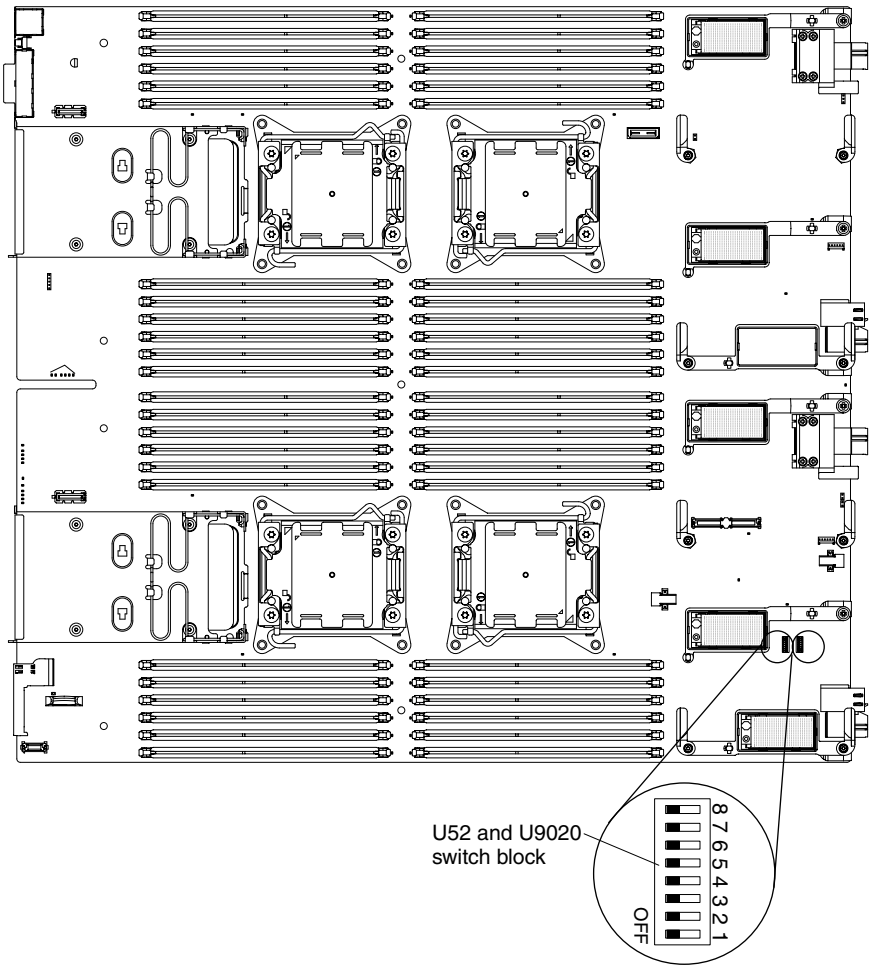

The following table describes the functions of the switches on switch block SW3.

Switch number	Description	Switch setting	Definition
U52-1	Password override	The default position Open.	Changing this switch to the Closed position overrides the power-on password.
U52-2	Trusted Platform Module (TPM) physical presence	The default position is Open.	Changing this switch to the Closed position indicates a physical presence to the TPM.
U52-3	Real time clock (RTC) reset	The default position is Open.	Changing this switch to the Closed position resets the RTC. A momentary toggle is all that is required. To avoid excessive CMOS battery drain, do not leave this switch in the Closed position.

Switch number	Description	Switch setting	Definition
U52-4	Boot backup IMM2	The default position is Open.	When the switch is in the default Open position, the compute node will boot by using the primary IMM2 firmware. When the switch is in the Closed position, the compute node will boot by using a backup of the IMM2 firmware.
U52-5	Boot backup UEFI	The default position is Open.	Changing this switch to the Closed position forces the compute node to boot from the backup UEFI image.
U52-6	IMM force update	The default position is Open.	Changing this switch to the Closed position bypasses the operational firmware image and performs a IMM firmware update, if the normal firmware update procedure results in an inoperative IMM. **Note:** Use this jumper only if the normal firmware update procedure fails and the operational firmware image is corrupted. Use of this jumper disables normal baseboard management controller operation.
U52-7	Wake on LAN (WOL) disable	The default position is Open.	Changing this switch to the Closed position disables WOL.
U52-8	Real time management module (RTMM) flash bypass	The default position is Open.	Changing this switch to the Closed position forces the compute node to use RTMM ROM instead of flash.
U9020-1	Asynchronous reset to configuration logic of FPGA	The default position is Open.	Changing this switch to the Closed position resets FPGA Configuration Logic
U9020-2	Power permission	The default position is Open.	Changing this switch to the closed position enables WOL and the front panel button.

Switch number	Description	Switch setting	Definition
U9020-3	FPGA mux enable	The default position is Open.	Changing this switch to the closed position to enable the FPGA MUX keyboard controls
U9020-4	Future use only		
U9020-5, U9020-6	Selecting dongle serial port MUX (U9812)	Closed, Closed Open, Closed Closed, Open Open, Open	BE3-1 TX/RX RTMM TX/RX IMM TX/RX SIO TX/RX
U9020-7, U9020-8	Selecting dongle serial port MUX (U9811)	Closed, Closed Open, Closed Closed, Open Open, Open	BE3-2 TX/RX FPGA TX/RX IMM TX/RX SIO RTS/CTS

Chapter 2. Configuring

Use this information to update the firmware and use the configuration utilities.

Updating firmware and device drivers

IBM periodically makes UEFI code, IMM2 firmware, diagnostic firmware updates, and device driver updates available for the compute node. Provisioning is the set of actions that you take to update the firmware and device drivers and install the operating system. Several tools are available to help you update the firmware and device drivers in the provisioning process.

- **IBM Flex System Manager Update Manager**

  IBM Flex System Manager Update Manager (if installed) acquires, installs, and manages firmware and device driver updates and monitors your compute nodes to ensure that they remain current. For more information about IBM Flex System Manager Update Manager, see http://ralfss21.raleigh.ibm.com:8099/help/topic/com.ibm.acc.8731.doc/updating_firmware_and_software.html.

- **UpdateXpress System Packs**

  UpdateXpress System Packs (UXSP) contain an integration-tested bundle of online, updateable firmware and device drivers for your compute node. The IBM ToolsCenter Bootable Media Creator uses UpdateXpress System Packs to update the firmware and device drivers.

  Typically, use UpdateXpress System Packs to update firmware and devices drivers for a compute node that has previously been provisioned. For more information about UpdateXpress System Packs, see http://www.ibm.com/support/entry/portal/docdisplay?lndocid=SERV-XPRESS.

- **IBM ToolsCenter Bootable Media Creator**

  You can use IBM ToolsCenter Bootable Media Creator to create bootable media that is suitable for applying firmware updates and running preboot diagnostics. Using IBM ToolsCenter Bootable Media Creator, you can create a single bootable image on supported media (such as CD, DVD, ISO image, USB flash drive, or set of PXE files) that bundles multiple IBM Flex System tools and updates from UpdateXpress System Packs, which contain Windows and Linux® firmware updates.

  Typically, use IBM ToolsCenter Bootable Media Creator for the initial setup of a compute node. For more information about the IBM Bootable Media Creator, see http://www.ibm.com/support/entry/portal/docdisplay?lndocid=TOOL-BOMC.

  To provision a compute node with updated firmware and device drivers by using IBM ToolsCenter Bootable Media Creator and the IBM Flex System Manager management software, complete the following steps:

  1. Download IBM ToolsCenter Bootable Media Creator to a computer that is connected over the management network to the IBM Flex System Manager management software that is managing the compute node.
  2. Create the bootable media of firmware and device driver updates.
  3. Connect to the IBM Flex System Manager management software that is managing the IBM Flex System chassis in which the compute node is installed.
  4. From IBM Flex System Manager Chassis Manager, select the compute node. In the Actions column, select **Remote Control**.

© Copyright IBM Corp. 2012

Note: The user ID that you use to log in to IBM Flex System Manager management software must have sufficient user permissions to manage the compute node.

5. From the Remote Control session, mount the bootable media (using Remote Media).
6. Start the compute node to boot the media and install the updates.

Important: To avoid problems and to maintain system performance, always make sure that the UEFI code, IMM2 firmware, and diagnostic firmware levels are consistent in all compute nodes in the IBM Flex System chassis.

Recovering a UEFI image

Use this information to recover a UEFI image.

About this task

The compute node has an advanced recovery feature that automatically switches to a backup UEFI page if the UEFI code in the compute node has become damaged, such as from a power failure during an update. The flash memory of the compute node consists of a primary page and a backup page. If the UEFI code in the primary page is damaged, the integrated management module detects the error and automatically switches to the backup page to start the compute node. If this happens, a POST message `Booted from backup UEFI image` is displayed, the check log LED is lit, and an automatic BIOS recovery (ABR) condition occurs. The backup page version might not be the same as the primary page version.

You can then recover or restore the original primary page UEFI.

Note: Changes are made periodically to the IBM website. The actual procedure might vary slightly from what is described in this document.

Procedure

To recover the UEFI code and restore the compute node operation to the primary page, complete the following steps:

1. Update the UEFI code (see "Updating firmware and device drivers" on page 23).
2. Restart the compute node.
3. At the firmware splash screen, press F3 when prompted to restore to the primary bank. The compute node boots from the primary bank.

   Note: The prompt to press F3 displays only if the compute node boots from the backup page due to an ABR condition.

What to do next

If the attempt to flash the primary page results in the compute node not booting and the check log LED is not lit, you can manually restore the UEFI code. To manually restore the UEFI code, complete the following steps.

Note: If the check log LED is lit, the compute node is booting from the backup image and moving the switch to backup changes nothing.

1. Before you begin, read “Safety” on page v and “Installation guidelines” on page 487.
2. Turn off the compute node (see “Turning off the compute node” on page 15).
3. Remove the compute node from the IBM Flex System chassis (see “Removing a compute node from a chassis” on page 489).
4. Remove the cover (see “Removing the compute node cover” on page 498).
5. Locate the boot backup UEFI switch on the switch block and move the switch to the On position (see “System-board switches” on page 18).
6. Replace the cover and reinstall the compute node in the IBM Flex System chassis (see “Installing the compute node cover” on page 500 and “Installing a compute node in a chassis” on page 490).
7. Update the UEFI code (see “Updating firmware and device drivers” on page 23).
8. Turn off the compute node and remove it from the IBM Flex System chassis (see “Turning off the compute node” on page 15 and “Removing a compute node from a chassis” on page 489).
9. Remove the cover of the compute node (see “Removing the compute node cover” on page 498).
10. Locate the boot backup UEFI switch on the switch block and move the switch to the Off position (see “System-board switches” on page 18).
11. Replace the cover and reinstall the compute node in the IBM Flex System chassis (see “Installing the compute node cover” on page 500 and “Installing a compute node in a chassis” on page 490).
12. Restart the compute node (see “Turning on the compute node” on page 13).

Important: If you are unable to manually restore the UEFI code after several attempts, replace the system-board assembly (see “Removing the base assembly” on page 529 and “Installing the base assembly” on page 531).

Configuring the compute node

Use this information to configure the compute node.

Procedure

To perform a typical initial configuration, complete the following steps:

Note: To configure a NIC, you configure the IP address of the IMM through the CMM Web interface. For more informatiinformation, see the "IBM Flex System Chassis Management Module: User's Guide" at http://publib.boulder.ibm.com/infocenter/flexsys/information/topic/com.ibm.acc.cmm.doc/cmm_user_guide.html.

1. Configure the Unified Extensible Firmware Interface (UEFI) firmware for the compute node by using the Setup utility (see “Using the Setup utility” on page 26 or the Advanced Setup Utility (ASU) (see http://www.ibm.com/support/entry/portal/docdisplay?lndocid=TOOL-ASU).

   For more information about firmware configuration options, see http://www.ibm.com/support/entry/portal/docdisplay?lndocid=MIGR-5083207.
2. Set the boot protocol by using the Setup utility (see “Setting the boot protocol to boot from legacy devices using the Setup utility” on page 31).

You can temporarily redefine the boot order by using the Boot Selection menu program (see "Using the Boot Selection Menu program" on page 32).

3. Configure the RAID array.

   You can install up to two hard disk drives in the compute node and implement RAID level-0 (striping) or RAID level-1 (mirror) arrays in operating systems that are listed on the ServerProven® list at http://www.ibm.com/systems/info/x86servers/serverproven/compat/us/. For the compute node, you must configure the RAID by using the LSI Configuration Utility program (see "Using the LSI Logic Configuration Utility" on page 36).

   If an optional RAID expansion adapter is installed, you can use it to control all the hard disk drives that are installed in the compute node. See the documentation that comes with the expansion adapter for information about how to configure the RAID array.

   Important: You must create the RAID array *before* you install the operating system on the compute node.

4. Configure the integrated management module II (IMM2) using either the Setup utility or the Advanced Settings Utility (ASU).
5. Update the compute node firmware (see "Updating firmware and device drivers" on page 23).

   Note: If the Chassis Management Module (CMM) and the compute nodes are set up to use DHCP, and the CMM loses connectivity to the network, the CMM attempts to acquire a new IP address when network connectivity is restored. The compute nodes will not attempt to acquire an IP address again; they will continue to use their original IP addresses. Therefore, if you experience network problems on compute nodes after connectivity between the CMM and the network is restored, you might have to reset the service processor on each of the compute nodes in the chassis (including the management node). See "Connectivity problems" on page 459 for more information.

What to do next

After you configure the compute node, you can install the operating system and update device drivers (see Chapter 3, "Installing the operating system," on page 39 for more information).

Using the Setup utility

Use these instructions to start the Setup utility.

Procedure

You can access the Setup utility remotely through the CMM web interface. From the CMM web interface, select **Launch Compute Node Console**. For more information, see the "IBM Flex System Chassis Management Module: User's Guide" at http://publib.boulder.ibm.com/infocenter/flexsys/information/topic/com.ibm.acc.cmm.doc/cmm_user_guide.html. All fields and options are described in the CMM web interface online help.

Note: The integrated management module II (IMM2) must have a valid IP address.

To start the Setup utility locally, complete the following steps:

1. If the compute node is turned on, turn off the compute node (see "Turning off the compute node" on page 15.

2. If necessary, connect a keyboard, monitor, and mouse to the console breakout cable and connect the console breakout cable to the compute node).
3. Turn on the compute node (see "Turning on the compute node" on page 13).
4. When the prompt `Press <F1> Setup` is displayed, press F1. If you have set an administrator password, you must type the administrator password to access the full Setup utility menu. If you do not type the administrator password, a limited Setup utility menu is available.
5. Follow the instructions on the screen.

Results

The following menu items are on the Setup utility main menu. Depending on the version of the Unified Extensible Firmware Interface (UEFI), some menu items might differ slightly from these descriptions.

- **System Information**

  Select this choice to view information about the compute node. When you make changes through other choices in the Setup utility, some of those changes are reflected in the system information; you cannot change settings directly in the system information. This choice is on the full Setup utility menu only.

  – **System Summary**

    Select this choice to view configuration information, including the ID, speed, and cache size of the microprocessors, machine type and model of the compute node, the serial number, the system Universally Unique Identifier (UID), and the amount of installed memory.

  – **Product Data**

    Select this choice to view the system-board identifier, the revision level or issue date of the firmware, the integrated management module II and diagnostics code, and the version and date.

  This choice is on the full UEFI Setup utility menu only.

- **System Settings**

  Select this choice to view or change the compute node component settings.

  – **Adapters and UEFI Drivers**

    Select this choice to view information about the adapters and UEFI device drivers in the compute node.

    Note: Before you configure a UEFI-compatible device, update the firmware for your compute node. See "Updating firmware and device drivers" on page 23 for information about how to update the firmware for your compute node.

    To configure a UEFI-compatible expansion adapter, complete the following steps:

    1. Select **Please refresh this page first** and press Enter.
    2. Select the device driver that you want to configure, and press Enter.
    3. When you have finished changing settings, press Esc to exit from the program; select **Save** to save the settings that you have changed.

  – **Processors**

    Select this choice to view or change the microprocessor settings.

  – **Memory**

    Select this choice to view or change the memory settings.

    If a memory error is detected during POST or memory configuration, the compute node automatically disables the failing pair of memory connectors

and continues operating with reduced memory. After the problem is corrected, you must manually enable the memory connectors. Select **System Memory Details** and use the arrow keys to highlight the pair of memory connectors that you want to enable; then, set the connectors to **Enable**.

– **Devices and I/O Ports**

  Select this choice to view or change assignments for devices and input/output (I/O) ports. You can configure the remote console redirection and enable or disable integrated Ethernet controllers. If you disable a device, it cannot be configured, and the operating system cannot detect it (disabling a device is equivalent to disconnecting the device).

  You can also choose to enable or disable adapter option ROM support. Disabling support can potentially improve the time it takes the compute node to start.

– **Power**

  Select this choice to view or change Active Energy Manager (AEM) power capping to control power consumption and microprocessor performance states.

– **Boot Modes**

  Select this choice to view or change the boot settings. You can set the boot mode and choose UEFI operating system support only, legacy (BIOS) operating system support only, or UEFI and legacy operating system support.

  Note: If you select the legacy only boot mode (which makes boot time much faster), you will not be able to activate any feature on demand (FoD) keys.

– **Operating Modes**

  Select this choice to determine operational settings, such as operating mode (acoustic, efficiency, or performance) and memory speed.

– **Legacy Support**

  Select this choice to view or set legacy support.

  - **Force Legacy Video on Boot**

    Select this choice to enable or disable force INT video support, if the operating system does not support UEFI video output standards. The default is **Enable**.

  - **Rehook INT**

    Select this choice to enable or disable devices from taking control of the boot process. The default is **Disable**.

  - **Legacy Thunk Support**

    Select this choice to enable or disable UEFI to interact with PCI mass storage devices that are non-UEFI compliant. The default is **Enable**.

  - **Infinite Boot Retry**

    Select this choice to enable or disable UEFI to infinitely retry the legacy boot order.

  - **Non-Planar PXE**

    Select this choice to enable or disable non-system-board PXE for legacy mode.

– **System Security**

  Select this choice to view or change the security options for Trusted Platform Module (TPM).

– **Integrated Management Module**

Select this choice to view or change the settings for the integrated management module II (IMM2).

- **Commands on USB Interface**

  Select this choice to specify whether the Ethernet over USB interface is enabled or disabled.

  Note: This option is primarily for older operating systems that have problems with USB communications device class (CDC) Ethernet interfaces. Disabling this option will cause the following issues:

  - Online update packages will not work.
  - Updates that use Bootable Media Creator (BoMC) will not work because BoMC uses the LAN over USB interface.
  - You must install the IPMI device driver to use the Advanced Settings Utility (ASU) to change the IMM2 or UEFI configuration.
  - You cannot set the IMM2 OS loader watchdog.

- **Network Configuration**

  Select this choice to view the system-management network interface port, IMM2 MAC address, current IMM2 IP address, and host name; define the static IMM2 IP address, subnet mask, and gateway address; specify whether to use the static IP address or have DHCP assign the IMM2 IP address; save the network changes; and reset the IMM2.

- **Reset IMM to Defaults**

  Select this choice to restore the IMM2 to the manufacturing default settings. The IMM2 controller restarts after you restore the settings.

- **Reset IMM**

  Select this choice to restart the IMM2 controller.

– **Recovery**

Select this choice to view or change the system recovery parameters.

- **POST Attempts**

  Select this choice to define the number of times to attempt POST before invoking the recovery procedures.

- **System Recovery**

  Select this choice to configure the recovery settings.

  - **POST Watchdog Timer**

    Select this choice to view or enable the POST watchdog timer.

  - **POST Watchdog Timer Value**

    Select this choice to view or set the POST loader watchdog timer value.

  - **Reboot System on NMI**

    Select this choice to enable or disable restarting the system whenever a nonmaskable interrupt (NMI) occurs. The default is **Disable**.

– **Storage**

Select this choice to view or change the storage device settings.

– **Network**

Select this choice to view or change the network device options, such as iSCSI.

– **Driver Health**

Select this choice to view the health status of the controllers as reported by the device drivers. You can select to perform a repair action on a device driver.

- **Date and Time**

  Select this choice to set the date and time for the compute node. The date is set in *month/day/year* format. The time is set in 24-hour format (*hour*:*minute*:*second*).

  This choice is on the full UEFI Setup utility menu only.

- **Start Options**

  Select this choice to view or change the startup sequence. The startup sequence specifies the order in which the compute node checks devices to find a boot record. The compute node starts from the first boot record that it finds. If the compute node has Wake on LAN hardware and software and the operating system supports Wake on LAN functions, you can specify a startup sequence for the Wake on LAN functions. For example, you can define a startup sequence that checks for a disc in the CD or DVD drive, then checks the hard disk drive, and then checks a network adapter.

  This choice is on the full UEFI Setup utility menu only.

- **Boot Manager**

  Select this choice to view, add, delete, or change the device boot priority, boot from a file, select a one-time boot, or reset the boot order to the default setting.

- **System Event Logs**

  Select this choice to access the System Event Manager, where you can view the POST event log and the system-event log.

  The POST event log contains the three most recent error codes and messages that were generated during POST.

  The system-event log contains POST and system management interrupt (SMI) events and all events that are generated by the baseboard management controller that is embedded in the integrated management module II.

  Important: If the system-error LED on the front of the compute node is lit but there are no other error indications, clear the system-event log. Also, after you complete a repair or correct an error, clear the system-event log to turn off the system-error LED on the front of the compute node.

  – **POST Event Viewer**

    Select this choice to enter the POST event viewer to view the UEFI diagnostic codes.

  – **System Event Log**

    Select this choice to view the system-event log.

  – **Clear System Event Log**

    Select this choice to clear the system-event log.

- **User Security**

  Select this choice to set, change, or clear passwords.

  You can set, change, and delete a power-on password and an administrator password through this selection. If you set a power-on password, you must type the power-on password to complete the system startup and to have access to the Setup utility menu.

  You can use any combination of up to from 6 to 20 characters (A - Z, a - z, and 0 - 9) for passwords. Keep a record of your password in a secure place.

  If you forget the power-on password, you can regain access to the compute node either by removing the CMOS battery and then reinstalling it (see “Removing

the CMOS battery" on page 496 and "Installing the CMOS battery" on page 497) or by using the power-on password override switch (see "System-board switches" on page 18).

- **Save Settings**

  Select this choice to save the changes that you have made in the settings.
- **Restore Settings**

  Select this choice to cancel the changes that you have made in the settings and restore the previous settings.
- **Load Default Settings**

  Select this choice to cancel the changes that you have made in the settings and restore the manufacturing settings.
- **Exit Setup**

  Select this choice to exit from the Setup utility. If you have not saved the changes that you have made in the settings, you are asked whether you want to save the changes or exit without saving them.

Setting the boot protocol to boot from legacy devices using the Setup utility

This option disables UEFI ROMs from loading. The compute node will boot legacy mode only.Use the Setup utility to configure the boot protocol to boot from a non-UEFI legacy network device for all PXE boot attempts.

To use the Setup utility to configure the boot protocol to boot from a non-UEFI legacy network device for all PXE boot attempts, complete the following steps:

1. Connect a keyboard, monitor, and mouse to the console breakout cable and connect the console breakout cable to the compute node.
2. Turn on the compute node (see "Turning on the compute node" on page 13).
3. When the prompt `Press <F1> Setup` is displayed, press F1. If you have set an administrator password, you must type the administrator password to access the full Setup utility menu. If you do not type the administrator password, a limited Setup utility menu is available.
4. From the Setup utility main menu, select **Boot Manager Settings**.
5. Select **Boot Modes**; then, select **Legacy Only**.
6. Press Esc twice to return to the Setup utility main menu.
7. Select **Save Settings** and then select **Exit Setup**.

To use the Setup utility to configure the boot protocol to boot from a non-UEFI legacy network device, complete the following steps:

1. Connect a keyboard, monitor, and mouse to the console breakout cable and connect the console breakout cable to the compute node.
2. Turn on the compute node (see "Turning on the compute node" on page 13).
3. When the prompt `Press <F1> Setup` is displayed, press F1. If you have set an administrator password, you must type the administrator password to access the full Setup utility menu. If you do not type the administrator password, a limited Setup utility menu is available.
4. From the Setup utility main menu, select **Boot Manager**.
5. Select **Add Boot Option**; then, select **Generic Boot Option**.
6. Select **Legacy Only**.
7. Move the non-UEFI legacy network device to the tope of the boot order.

8. Press Esc three times to return to the Setup utility main menu.
9. Select **Save Settings** and then, select **Exit Setup**.

Using the Boot Selection Menu program

The Boot Selection Menu program is a built-in, menu-driven configuration utility program that you can use to temporarily redefine the first startup device without changing settings in the Setup utility.

Procedure

To use the Boot Selection Menu program, complete the following steps:

1. Connect a keyboard, monitor, and mouse to the console breakout cable, and connect the console breakout cable to the compute node.
2. Turn on the compute node (see "Turning on the compute node" on page 13).
3. Press F12 (**Select Boot Device**). If a bootable USB mass storage device is installed, a submenu item (**USB Key/Disk**) is displayed.
4. Use the Up Arrow and Down Arrow keys to select an item from the Boot Selection Menu and press **Enter**.

Results

The next time the compute node starts, it returns to the startup sequence that is set in the Setup utility.

Updating the Universally Unique Identifier and DMI/SMBIOS data

After the system board is replaced, you must update the Universally Unique Identifier (UUID) and DMI/SMBIOS data in the integrated management module II (IMM2) on the new system board.

You can use the Advanced Settings Utility (ASU) and any of the following access methods:

- Locally (in-band)
  - Through the Keyboard Controller Style (KCS) interface
  - Through the LAN over USB interface
- Remotely over a LAN

You can use the ASU under any supported operating system, or you can use the Bootable Media Creator or a Windows- or Linux-based toolkit to create Windows Professional Edition or Master Control Program (MCP) bootable media that contains the ASU. For information about the ASU and instructions for downloading and unpacking the ASU code, see http://www.ibm.com/support/entry/portal/docdisplay?lndocid=TOOL-ASU and the *Advanced Settings Utility User's Guide*.

The following sections provide instructions for updating the UUID and DMI/SMBIOS data, using the different methods for accessing the IMM2. The following conventions apply to the command syntax:

- Variables are shown in *italics*.
- Optional parameters are enclosed in brackets ([ ]). Do not type the brackets in the commands. If you omit an optional parameter, the default is used.
- Although the command syntax is shown in mixed case, the commands are not case sensitive.

Locally: Keyboard Controller Style (KCS)

This access method uses the IPMI/KCS interface. The IPMI driver must be installed; with some operating systems, the IPMI driver is installed by default. The ASU provides the corresponding mapping layer.

Procedure

To update the UUID, in the ASU command-line interface, enter the following command:

```
asu set SYSTEM_PROD_DATA.SysInfoUUID uuid
```

where *uuid* is the user-assigned hexadecimal value, up to 16 bytes, that identifies the compute node.
To update the DMI/SMBIOS data, complete the following steps:

1. In the ASU command-line interface, enter the following command:

   ```
   asu set SYSTEM_PROD_DATA.SysInfoProdName xxxxyyy
   ```

   where:

   xxxx is the 4-digit machine type of the compute node.

   yyy is the 3-digit model number of the compute node.
2. Enter the following command:

   ```
   asu set SYSTEM_PROD_DATA.SysInfoSerialNum zzzzzzz
   ```

   where *zzzzzzz* is the 7-character serial number of the compute node.
3. Enter the following command:

   ```
   asu set SYSTEM_PROD_DATA.SysEncloseAssetTag
        aaaaaaaaaaaaaaaaaaaaaaaaaaaaaaaaa
   ```

   where *aaaaaaaaaaaaaaaaaaaaaaaaaaaaaaaaa* is the 33-character asset tag number of the compute node.

Locally: LAN over USB

If you omit any optional parameter, the default value is used. If one or more default values are used and the ASU cannot access the IMM2 by using the LAN over USB access method, the ASU automatically uses the KCS access method.

Procedure

To update the UUID, in the ASU command-line interface, enter the following command:

```
asu set SYSTEM_PROD_DATA.SysInfoUUID uuid [--host ipaddress]
     [--user userid][--password password]
```

where:

uuid is the user-assigned hexadecimal value, up to 16 bytes, that identifies the compute node.

ipaddress
is the internal LAN/USB IP address of the IMM2. The default is 169.254.95.118.

userid is the IMM2 account name (1 of 12 accounts). The default is USERID.

password
is the IMM2 account password (1 of 12 accounts). The default is PASSW0RD (with a zero, not the letter O).

To update the DMI/SMBIOS data, complete the following steps:

1. In the ASU command-line interface, enter the following command:

   ```
   asu set SYSTEM_PROD_DATA.SysInfoProdName xxxxyyy [--host ipaddress]
        [--user userid][--password password]
   ```

   where:

   xxxx is the 4-digit machine type of the compute node.

   yyy is the 3-digit model number of the compute node.

   ipaddress
   is the internal LAN/USB IP address of the IMM2. The default is 169.254.95.118.

   userid is the IMM2 account name (1 of 12 accounts). The default is USERID.

   password
   is the IMM2 account password (1 of 12 accounts). The default is PASSW0RD (with a zero, not the letter O).

2. Enter the following command:

   ```
   asu set SYSTEM_PROD_DATA.SysInfoSerialNum zzzzzzz [--host ipaddress]
        [--user userid][--password password]
   ```

   where *zzzzzzz* is the 7-character serial number of the compute node.

3. Enter the following command:

   ```
   asu set SYSTEM_PROD_DATA.SysEncloseAssetTag
        aaaaaaaaaaaaaaaaaaaaaaaaaaaaaaaaa [--host ipaddress]
        [--user userid][--password password]
   ```

   where *aaaaaaaaaaaaaaaaaaaaaaaaaaaaaaaaa* is the 33-character asset tag number of the compute node.

Remotely over a LAN

If you omit any optional parameter, the default value is used.

Procedure

To update the UUID, in the ASU command-line interface, enter the following command:

```
asu set SYSTEM_PROD_DATA.SysInfoUUID uuid --host ipaddress
     [--user userid][--password password]
```

where:

uuid is the user-assigned hexadecimal value, up to 16 bytes, that identifies the compute node.

ipaddress
is the external LAN IP address of the IMM2.

userid is the IMM2 account name (1 of 12 accounts). The default is USERID.

password
is the IMM2 account password (1 of 12 accounts). The default is PASSW0RD (with a zero, not the letter O).

To update the DMI/SMBIOS data, complete the following steps:

1. In the ASU command-line interface, enter the following command:

   ```
   asu set SYSTEM_PROD_DATA.SysInfoProdName xxxxyyy --host ipaddress
        [--user userid][--password password]
   ```

   where:

   xxxx is the 4-digit machine type of the compute node.

   yyy is the 3-digit model number of the compute node.

   ipaddress
   is the external LAN IP address of the IMM2.

   userid is the IMM2 account name (1 of 12 accounts). The default is USERID.

   password
   is the IMM2 account password (1 or 12 accounts). The default is PASSW0RD (with a zero, not the letter O).

2. Enter the following command:

   ```
   asu set SYSTEM_PROD_DATA.SysInfoSerialNum zzzzzzz --host ipaddress
        [--user userid][--password password]
   ```

   where *zzzzzzz* is the 7-character serial number of the compute node.

3. Enter the following command:

   ```
   asu set SYSTEM_PROD_DATA.SysEncloseAssetTag
        aaaaaaaaaaaaaaaaaaaaaaaaaaaaaaaaa --host ipaddress
        [--user userid][--password password]
   ```

   where *aaaaaaaaaaaaaaaaaaaaaaaaaaaaaaaaa* is the 33-character asset tag number of the compute node.

Configuring a RAID array

Use this information to configure a RAID array.

About this task

Configuring a RAID array applies only to a compute node in which two or more hard disk drives are installed.

Note: When you configure a RAID array, the hard disk drives must use the same type of interface. For example, a RAID array can be configured with two SAS hard disk drives or two SATA hard disk drives.

You can use two hard disk drives in the compute node to implement and manage RAID level-0 (striping) or RAID level-1 (mirror) arrays in operating systems that are listed on the ServerProven list at http://www.ibm.com/systems/info/x86servers/serverproven/compat/us/. For the compute node, you must configure the RAID by using the LSI Configuration Utility program.

If an optional RAID expansion adapter is installed, you can use it to control all of the hard disk drives that are installed in the compute node. See the documentation that comes with the expansion adapter for information about how to configure the RAID array.

Important: You must create the RAID array *before* you install the operating system on the compute node.

You can use the LSI Logic Configuration Utility program to configure the hard disk drives and the SAS controller. To start the LSI Logic Configuration Utility, see "Using the LSI Logic Configuration Utility."

Using the LSI Logic Configuration Utility

Use these instructions to start the LSI Logic Configuration Utility.

About this task

You can use the LSI Logic Configuration Utility to perform the following tasks:

- Set the device boot order
- Add or remove devices from the boot list
- Manage the RAID configuration

Note: The hard disk drive in the RAID configuration must use the same type of interface and must have identical capacity and speed.

Procedure

To start the LSI Logic Configuration Utility program, complete the following steps:

1. Connect a keyboard, monitor, and mouse to the console breakout cable and connect the console breakout cable to the compute node.
2. Turn on the compute node (see "Turning on the compute node" on page 13).
3. When the prompt `Press <F1> Setup` is displayed, press F1. If you have set an administrator password, you must type the administrator password to access the full Setup utility menu. If you do not type the administrator password, a limited Setup utility menu is available.
4. From the Setup utility main menu, select **System Settings**; then select **Storage**.
5. Use the arrow keys to select the controller from the list of adapters; then, press Enter.
6. Follow the instructions on the screen to change the settings of the selected items; then, press Enter. If you select **SAS Topology** or **Advanced Adapter Properties**, additional screens are displayed.

Setting up the LAN-on-motherboard (LOM) feature

This topic provides information about setting up the LAN-on-motherboard (LOM) feature.

Some models of the IBM Flex System x440 Compute Node have an Ethernet LAN-on-motherboard (LOM) controller integrated on the system board. The LOM provides the following features:

- Two operational mode choices:
  - One-port physical NIC mode (pNIC), multichannel disabled, which is the default.

  - Virtual NIC mode (vNIC), multichannel enabled. vNIC mode enables up to 4 virtual NIC interfaces per 10 Gb physical port (8 total for the LOM).

  For more information about how LOM ports are mapped to switch modules in the chassis, see http://publib.boulder.ibm.com/infocenter/flexsys/information/.
- Two options for vNIC linking:
  - VNIC1, IBM Virtual Fabric mode.
  - VNIC2, Switch Independent mode.

  You can select these options using the Setup utility (F1).
- Link auto negotiation 10 Gb/1 Gb full duplex.
- Bus-mastering support.
- Direct memory access (DMA) support.
- Interoperability with existing FC SAN infrastructures, such as switches, arrays, SRM tools (including Emulex utilities), SAN practices, and other infrastructures.
- Unified Ethernet-to-FC SAN connectivity provided by an FCoE switch.
- 10 Gb MAC features such as MSI-X support, jumbo frames (8 KB) support, VLAN tagging (802.1Q, PER priority pause/priority flow control), and advanced packet filtering.
- NIC failover support.
- Support for IBM Fabric Manager (IFM).
- Preboot Execution Environment, UEFI, and Legacy PXE.
- Wake on LAN (WOL).
- SRIOV support.
- ISCSI or FCoE capabilities, which can be enabled through IBM Features on Demand. When enabled, the ISCSI or FCoE operations are supported on the second vNIC of the physical port.

Separate NIC, ISCSI, and FCoE drivers are provided to support all configurations. To obtain the device drivers, go to http://www.emulex.com/downloads/ibm/vfa-software-kits.html.

No host operating system changes are required for you to use the LOM features. NIC and HBA functionality (including device management, utilities, and other functions) are transparent to the host operating system.

For more information about using the LOM feature, go to http://www.emulex.com/support.html.

Chapter 3. Installing the operating system

Use these instructions to install the operating system on the compute node.

Provisioning is the set of actions that you take to install the operating system. To install the operating system on a compute node, you can use any of the following methods:

- **IBM *ServerGuide Setup and Installation* CD**

  Use the *ServerGuide Setup and Installation* CD to install a supported Microsoft Windows operating system only. To provision a compute node with an operating system by using the *ServerGuide Setup and Installation* CD, complete the following steps.

  1. Download the *ServerGuide Setup and Installation* CD ISO image to a computer that is connected over the management network to the IBM Flex System Manager management software (if installed) that is managing the compute node.
  2. Connect to the IBM Flex System Manager management software that is managing the IBM Flex System chassis in which the compute node is installed.
  3. From IBM Flex System Manager Chassis Manager, select the compute node. In the Actions column, select **Remote Control**.

     Note: The user ID that you use to log in to IBM Flex System Manager management software must have sufficient user permissions to manage the compute node.
  4. From the Remote Control session, mount the *ServerGuide Setup and Installation* CD bootable media (using Remote Media). When the ServerGuide program prompts you to mount the operating-system image, unmount the *ServerGuide Setup and Installation* CD and mount the operating-system image.

     You can also install an ISO image of the operating system from an external or portable storage device, such as a USB device, by using Remote Media. For more information, see http://ralfss21.raleigh.ibm.com:8099/help/topic/com.ibm.acc.8731.doc/remote_control_installing_an_operating_system_on_an_x-architecture_compute_node.html.
  5. Start the compute node to boot the media and install the operating system.

- **IBM ToolsCenter Bootable Media Creator**

  Use IBM ToolsCenter Bootable Media Creator to create an IBM *ServerGuide Setup and Installation* CD for deploying Windows operating systems and updates from UpdateXpress System Packs. For more information about the IBM Bootable Media Creator, see http://www.ibm.com/support/entry/portal/docdisplay?lndocid=TOOL-BOMC.

  To provision a compute node with an operating system by using IBM ToolsCenter Bootable Media Creator, complete the following steps:

  1. Download IBM ToolsCenter Bootable Media Creator to a computer that is connected over the management network to the IBM Flex System Manager management software that is managing the compute node.
  2. Connect to the IBM Flex System Manager management software (if installed) that is managing the IBM Flex System chassis in which the compute node is installed.

© Copyright IBM Corp. 2012

3. From IBM Flex System Manager Chassis Manager, select the compute node. In the Actions column, select **Remote Control**.

   Note: The user ID that you use to log in to IBM Flex System Manager management software must have sufficient user permissions to manage the compute node.
4. From the Remote Control session, mount the *ServerGuide Setup and Installation* CD bootable media (using Remote Media). When the ServerGuide program prompts you to mount the operating-system image, unmount the *ServerGuide Setup and Installation* CD and mount the operating-system image.

   You can also install an ISO image of the operating system from an external or portable storage device, such as a USB device, by using Remote Media. For more information, see http://ralfss21.raleigh.ibm.com:8099/help/topic/com.ibm.acc.8731.doc/remote_control_installing_an_operating_system_on_an_x-architecture_compute_node.html.
5. Start the compute node to boot the media and install the operating system.

- **IBM ServerGuide Scripting Toolkit**

  The ServerGuide Scripting Toolkit is a collection of system-configuration tools and installation scripts that you can use to deploy software to your compute node in a repeatable, predictable manner (see "Using IBM ServerGuide Scripting Toolkit" on page 42).
- **Operating-system installation instructions**

  Download the latest operating-system installation instructions and install the operating system.

Important: The operating system in the compute node must provide USB support for the compute node to recognize and use the keyboard, mouse, and removable-media drives.

Using the ServerGuide Setup and Installation CD

The *ServerGuide Setup and Installation* CD provides software setup tools and installation tools that are designed for your compute node. The ServerGuide program detects the compute node model and optional hardware devices that are installed and uses that information during setup to configure the hardware. The ServerGuide program simplifies operating-system installations by providing updated device drivers and, in some cases, installing them automatically.

You can download a free image of the *ServerGuide Setup and Installation* CD from http://www.ibm.com/support/entry/portal/docdisplay?lndocid=SERV-GUIDE.

In addition to the *ServerGuide Setup and Installation* CD, you must have your operating-system CD to install the operating system.

ServerGuide features

This information provides an overview of the ServerGuide features.

Features and functions can vary slightly with different versions of the ServerGuide program. To learn more about the version that you have, start the *ServerGuide Setup and Installation* CD and view the online overview. Not all features are supported on all compute node models.

The ServerGuide program has the following features:

- An easy-to-use interface
- Diskette-free setup, and configuration programs that are based on detected hardware
- Device drivers that are provided for the compute node model and detected hardware
- Operating-system partition size and file-system type that are selectable during setup

The ServerGuide program performs the following tasks:

- Sets system date and time
- Detects installed optional hardware devices and provides updated device drivers for most adapters and devices
- Provides diskette-free installation for supported Windows operating systems
- Includes an online readme file with links to tips for hardware and operating-system installation

Typical operating-system installation

The ServerGuide program can reduce the time it takes to install an operating system. It provides the device drivers that are required for your hardware and for the operating system that you are installing. This section describes a typical ServerGuide operating-system installation.

Note: Features and functions can vary slightly with different versions of the ServerGuide program.

1. After you have completed the setup process, the operating-system installation program starts. (You will need your operating-system CD to complete the installation.)
2. The ServerGuide program stores information about the compute node model, IMM2, hard disk drive controllers, and network adapters. Then, the program checks the CD for newer device drivers. This information is stored and then passed to the operating-system installation program.
3. The ServerGuide program presents operating-system partition options that are based on your operating-system selection and the installed hard disk drives.
4. The ServerGuide program prompts you to insert your operating-system CD and restart the compute node. At this point, the installation program for the operating system takes control to complete the installation.

Installing the operating system without using ServerGuide

Use this information to install the operating system on the compute node without using ServerGuide.

About this task

If you have already configured the compute node hardware and you are not using the ServerGuide program to install your operating system, you can download operating-system installation instructions for the compute node from http://www.ibm.com/supportportal/.

Using IBM ServerGuide Scripting Toolkit

The ServerGuide Scripting Toolkit is a collection of system-configuration tools and installation scripts that you can use to deploy software to your IBM Flex System compute node in a repeatable, predictable manner. When the ServerGuide Scripting Toolkit is used with IBM ServerGuide, it provides a total solution for deploying IBM Flex System compute nodes in an unattended mode.

For more information about using the IBM ServerGuide Scripting Toolkit, see http://www.ibm.com/support/entry/portal/docdisplay?lndocid=TOOL-CENTER.

Chapter 4. Accessing the IMM2

Use this information to access the integrated management module II (IMM2) remotely by using the command-line interface (IPMI shell) or serial over LAN, or locally through the LAN over USB interface.

The IMM2 is a second generation of the functions that were formerly provided by the baseboard management controller hardware. It combines service processor functions, video controller, and remote presence function in a single chip.

For more information about the IMM2, seehttp://www.ibm.com/support/entry/portal/docdisplay?Indocid=MIGR-5089484

Accessing the IMM2 remotely

The integrated management module II (IMM2) provides the following remote systems-management capabilities:

- **Command-line interface (IPMI Shell)**

  The command-line interface provides direct access to systems management functions through the IPMI 2.0 protocol. Use the command-line interface to issue commands to control the compute node power, view system information, and identify the compute node. You can also save one or more commands as a text file and run the file as a script.
- **Serial over LAN**

  Establish a Serial over LAN (SOL) connection to manage compute nodes from a remote location. You can remotely view and change the UEFI settings, restart the compute node, identify the compute node, and perform other management functions. Any standard Telnet client application can access the SOL connection.

See your operation-system documentation for information about SOL comands that you can enter by using the command line interface.

Obtaining the IP address for Web interface access

Use these instructions to obtain the IP address for Web interface access.

To access the Web interface, you need the IP address of the IMM2 which you can obtain through the Setup utility. To obtain the IP address, complete the following steps:

1. Connect a keyboard, monitor, and mouse to the console breakout cable and connect the console breakout cable to the compute node.
2. Turn on the compute node (see “Turning on the compute node” on page 13).
3. When the prompt `Press <F1> Setup` is displayed, press F1. If you have set an administrator password, you must type the administrator password to access the full Setup utility menu. If you do not type the administrator password, a limited Setup utility menu is available.
4. Select **System Settings** → **Integrated Management Module** → **Network Configuration**.
5. Locate the IP address.
6. Exit from the Setup utility.

© Copyright IBM Corp. 2012

Logging in to the web interface

Use these instruction to log in to the IMM2 web interface.

Notes:

- If you are logging in to the IMM2 for the first time after installation, the IMM2 defaults to Dynamic Host Configuration Protocal (DHCP). If a DHCP host is not available, the IMM2 assigns a static IP address of 192.168.70.125.
- You can also assign IP addresses through the CMM **ifconfig** command. For more information about the CMM **ifconfig** command, see the "IBM Flex System Management Module: Command-Line Interface Reference Guide" at http://publib.boulder.ibm.com/infocenter/flexsys/information/index.jsp?topic=%2Fcom.ibm.acc.cmm.doc%2Fcli_command_ifconfig.html.
- If the CMM and compute nodes are set to use DHCP and the CMM loses connectivity to the network, the CMM attempts to acquire a new IP address when network connectivity is restored. The compute nodes will not attempt to acquire an IP address again, and the compute nodes continue to use their existing IP addresses. Therefore, if you experience network problems on compute nodes after connectivity between the CMM and the network has been restored, you might have to reset the system management processor on each of the compute nodes in the chassis (including IBM Flex System Manager management software, if it is installed).

To log into the IMM2 web interface, complete the following steps.

1. Open a web browser and in the **Address** or **URL** field, type IP adress or host name of the IMM2 to which you want to connect.
2. On the Login page, type the CMM user name and CMM password. If you are using the IMM2 for the first time, you can obtain the user name and password from your system administrator. All login attempts are documented in the IMM event log.

   Note: The IMM2 will log you out of the web interface if your browser is inactive for 20 minutes.
3. Click **Continue** to start the session. The System Status page provides a quick view of the compute node status.

IMM2 action descriptions

Navigate to activities you perform with the IMM at the top of the IMM window. The title bar identifies the user name that is logged in, allows you to configure **Settings** for the status screen refresh rate and a custom trespass message, and **Log out** of the IMM web interface. Beneath the title bar are tabs that allow you to access various IMM2 functions, as listed in Table 2 on page 45.

For more information about the IMM2 actions, see

Table 2. IMM2 actions

Tab	Selection	Description
System Status		The System Status page allows you to view system status, active system events, and hardware health information. It provides quick links to the Server Power® Actions, and Remote Control functions of the Server Management tab, and allows you to view an image of the last operating-system-failure screen capture.
Events	Event Log	The Event Log page displays entries that are currently stored in the IMM event log. The log includes a text description of system events that are reported, including information about all remote access attempts and configuration changes. All events in the log are time stamped, using the IMM2 date and time settings. Some events also generate alerts, if they are configured to do so. You can sort and filter events in the event log and export them to a text file.
	Event Recipients	The Event Recipients page allows you to manage who will be notified of system events. It allows you to configure each recipient, and manage settings that apply to all event recipients. You can also generate a test event to verify notification feature operation.
Service and Support	Download Service Data	The Download Service Data page creates a compressed file of information that can be used by IBM Support to assist you. You might be asked to generate this file and send to IBM when requesting service.
Server Management	Server Firmware	The Server Firmware page displays firmware levels and allows you to update the IMM2 firmware, compute node firmware, and DSA firmware.
	Remote Control	The Remote Control page allows you to control the compute node at the operating system level. It provides access to both Remote Disk and Remote Console functionality. You can view and operate the compute node console from your computer, and you can mount one of your computer disk drives, such as the CD-ROM drive or the diskette drive, on the compute node. When you have mounted a disk, you can use it to restart the compute node and to update firmware on the compute node. The mounted disk appears as a USB disk drive that is attached to the compute node.

Table 2. IMM2 actions (continued)

Tab	Selection	Description
Server Management	Server Properties	The Server Properties page provides access to various properties, status, and settings for your compute node: • The General Settings tab displays information that identifies the system to operations and support personnel. • The LEDs tab displays the status of all system LEDs. It also allows you to change the state of the location LED. • The Hardware Information tab displays compute node vital product data (VPD). The IMM2 collects compute node information, compute node component information, and network hardware information. • The Environmentals tab displays voltage and temperature information for the compute node and its components. • The Hardware Activity tab displays a history of Field Repeatable Unit (FRU) components that have been added to or removed from the system.
	Server Power Actions	The Server Power Actions page provides full remote power control over your compute node with power-on, power-off, and restart actions.
	Disks	The Disks page displays the status of hard disk drives in the system. You can click on a drive name to display active events for the hard disk drive.
	Processors	The Processors page displays the microprocessors in the system, along with their status and rated speed. You can click on a microprocessor name to display events and additional hardware information for the microprocessor.
	Server Timeouts	The Server Timeouts page allows you to manage compute node start timeouts to detect and recover from compute node hang occurrences.
	PXE Network Boot	The PXE Network Boot page allows you to change the host compute node startup (boot) sequence for the next restart to attempt a Preboot Execution Environment (PXE)/Dynamic Host Configuration Protocol (DHCP) network startup. The host startup sequence will be altered only if the host is not under Privileged Access Protection (PAP).
	Latest OS Failure Screen	The Latest OS Failure Screen page displays a screen image, when available, of the most recent operating system failure on the compute node. For your IMM to capture operating system failure screens, the operating system watchdog must be enabled.
IMM Management	IMM Properties	The IMM Properties page provides access to various properties, status, and settings for your IMM2: • The Firmware tab provides a link to the Server Firmware section of Server Management. • The IMM Date and Time Settings tab allows you to view and configure date and time settings for the IMM2. • The Serial Port tab configures the IMM2 serial port settings. These settings include the serial port baud rate used by the serial port redirection function and the key sequence to switch between the serial redirection and command-line interface (CLI) modes.
	Users	The Users page configures the IMM2 login profiles and global login settings, and view users that are currently logged in to the IMM2. Global login settings include enabling Lightweight Directory Access Protocol (LDAP) compute node authentication, setting the web inactivity timeout, and customizing the account security settings.

Table 2. IMM2 actions (continued)

Tab	Selection	Description
IMM Management	Network	The Network Protocol Properties page provides access to networking properties, status, and settings for your IMM2: • The Ethernet tab manages how the IMM2 communicates using Ethernet. • The SNMP tab configures the SNMPv1 and SNMPv3 agents. • The DNS tab configures the DNS servers that the IMM2 interacts with. • The DDNS tab enables or disables and configures Dynamic DNS for the IMM2. • The SMTP tab configures SMTP server information used for alerts sent via email. • The LDAP tab configures user authentication for use with one or more LDAP servers. • The Telnet tab manages Telnet access to the IMM2. • The USB tab controls the USB interface used for in-band communication between the server and the IMM2. These settings do not affect the USB remote control functions (keyboard, mouse, and mass storage). • The Port Assignments tab allows you to change the port numbers used by some services on the IMM2.
	Security	The IMM Security page provides access to security properties, status, and settings for your IMM2: • The HTTPS Server tab allows you to enable or disable the HTTPS server and manage its certificates. • The CIM Over HTTPS tab allows you to enable or disable CIM over HTTPS and manage its certificates. • The LDAP Client tab allows you to enable or disable LDAP security and manage its certificates. • The SSH Server tab allows you to enable or disable the SSH server and manage its certificates.
	Restart IMM	The Restart IMM page allows you to reset the IMM.
	IMM Configuration	The IMM Configuration page displays a summary of the current IMM2 configuration settings. It also provides the following functions: • Backup the current IMM2 configuration • Restore a saved IMM2 configuration • Display backup and restoration status • Reset the configuration of the IMM2 to the factory defaults. • Access the IMM2 initial setup wizard **Note:** Backups that you make from the IMM user interface will not contain any local user accounts that were created from the IMM user interface.
	Reset IMM to factory defaults...	The Reset IMM to factory defaults... page allows you to reset the configuration of the IMM2 to the factory defaults. **Attention:** When you click **Reset IMM to factory defaults...**, all of the modifications that you made to the IMM2 are lost.
	Activation Key Management	The Activation Key Management page allows you to manage activation keys for optional IMM2 or compute node Features on Demand (FoD) features.

Accessing the IMM2 using the LAN over USB interface

Unlike a baseboard management controller, the IMM2 does not require IPMI device drivers or USB daemons for in-band IMM2 communication. Instead, a LAN over USB interface enables in-band communication to the IMM2; the IMM2 hardware on the system board presents an internal Ethernet interface from the IMM2 to the operating system. LAN over USB is also called the *USB in-band interface* in the IMM2 web interface.

The following table shows the IP addresses for the IMM2 and the host.

Table 3. LAN over USB addresses

IMM2 IP address	IMM2 IP subnet mask	Host address	Host subnet	Host subnet mask	Keyboard Controller Style (KCS) address
169.265.95.118	255.255.255.0	169.254.95.120	169.254.95.0/24	255.255.255.0	0x8C80

Configuring the LAN over USB interface

An IMM2 must be configured to use the LAN over USB interface. The firmware update package or Advanced Settings Utility attempts to perform the setup automatically, if needed. If the automatic setup fails or if you prefer to set up the LAN over USB manually, use one of the following processes.

For more information about LAN over USB configuration on different operating systems, see http://www.ibm.com/support/entry/portal/docdisplay?lndocid=MIGR-5083207.

Installing the LAN over USB Windows device driver

When you install a Windows operating system, there will be an unknown RNDIS device in the Device Manager. IBM provides a Windows INF file that identifies this device. The signed version of the INF file is included in all of the Windows versions of the IMM2, UEFI, and DSA update packages. Complete the following steps to install `ibm_rndis_server_os.inf`.

Procedure

To install the LAN over USB device driver for Windows, complete the following steps.

Note: You only have to perform these steps if the compute node is running a Windows operating system and the `ibm_rndis_server_os.inf` file has not been previously installed. The file only has to be installed once. It is required by Windows operating systems to detect and use the LAN over USB functionality.

1. Obtain a Windows version of the server or compute node UEFI code package (see "Updating firmware and device drivers" on page 23 for more information).
2. Extract the `ibm_rndis_server_os.inf` and `device.cat` files from the firmware update package and copy them to the `\WINDOWS\inf` subdirectory.

   Note: You can use the -x *path* command-line interface option to extract the files. For more information about this option, see the readme file that comes with the update package.

3. (Windows 2003) Install the `ibm_rndis_server_os.inf` file by right-clicking the file and clicking **Install**. This generates a PNF file of the same name in `\WINDOWS\inf`.

   (Windows 2008) Click **Computer Management** > **Device Manager** and find the RNDIS Device. Click **Properties** > **Driver** > **Reinstall driver**. Point the server or compute node to the `\Windows\inf` directory where it can find the `ibm_rndis_server_os.inf` file and install the device.
4. Click **Computer Management** > **Device Manager**. Right-click **Network adapters** and select **Scan for hardware changes**. A small pop-up window confirms that the Ethernet device is found and installed. The New Hardware Wizard starts automatically.
5. When you are prompted `Can Windows connect to Windows Update to search for software?`, select **No, not this time**. Click **Next** to continue.
6. When you are prompted `What do you want the wizard to do?`, select **Install from a list or specific location (Advanced)**. Click **Next** to continue.
7. When you are prompted `Please choose your search and installation options`, select **Don't search. I will choose the driver to install**. Click **Next** to continue.
8. When you are prompted `Select a hardware type, and then click Next`, select **Network adapters**. Click **Next** to continue.
9. When you are prompted with the statement `Completing the Found New Hardware Wizard`, click **Finish**. A new local area connection appears. If the message `This connection has limited or no connectivity` is displayed, ignore this message.
10. Return to the Device Manager. **IBM USB Remote NDIS Network Device** appears under **Network Adapters**.

Installing the LAN over USB Linux device driver

Versions of Linux since RHEL5 Update 3 and SLES10 Service Pack 2 support the LAN over USB interface by default. This interface is detected and displayed during the installation of these operating systems.

See Table 3 on page 48 for information about the IP addresses.

Note: Older Linux distributions might not detect the LAN over USB interface and might require manual configuration. For information about configuring LAN over USB on specific Linux distributions, see http://www.ibm.com/support/entry/portal/docdisplay?lndocid=MIGR-5083207.

The IMM2 LAN over USB interface requires that the `usbnet` and `cdc_ether` device drivers be loaded. If the drivers have not been installed, use **modprobe** to install them. When these drivers are installed, the IMM2 USB network interface is shown as a network device in the operating system. To discover the name that the operating system has assigned to the IMM2 USB network interface, type

```
dmesg | grep -i cdc ether
```

Potential conflicts with the LAN over USB interface

In some situations, the LAN over USB interface can conflict with certain network configurations, applications, or both. For example, Open MPI attempts to use all the available network interfaces on a server or compute node. Open MPI detects the IMM2 LAN over USB interface and attempts to use it to communicate with

other systems in a clustered environment. The LAN over USB interface is an internal interface, so this interface does not work for external communication with other systems in the cluster.

Resolving conflicts with the IMM2 LAN over USB interface

Use any of the following actions to resolve LAN over USB conflicts with network configurations and applications.

About this task

Use one of the following methods to resolve LAN over USB conflicts.

Note: For conflicts with Open MPI, configure the application so that it does not attempt to use this interface.

- Take down the interface (run **ifdown** under Linux).
- Remove the device driver (run **rmmod** under Linux).
- Disable the LAN over USB interface from the CMM web interface.

  To disable the LAN over USB interface from the Chassis Management Module web interface, complete the following steps.

  1. Log in to the CMM web interface.
  2. From the CMM web interface homepage click **Chassis Management** > **Compute Nodes**.
  3. Click the compute node ID.
  4. Click the **General** tab.
  5. Uncheck **Enable Ethernet Over USB** to disable the LAN over USB interface.

Chapter 5. Parts listing, Types 7917 and 2584

The following replaceable components are available for the IBM Flex System x440 Compute Node Types 7917 and 2584.

For an updated parts listing on the web, go to http://www.ibm.com/supportportal/.

Note: The illustrations in this document might differ slightly from your hardware.

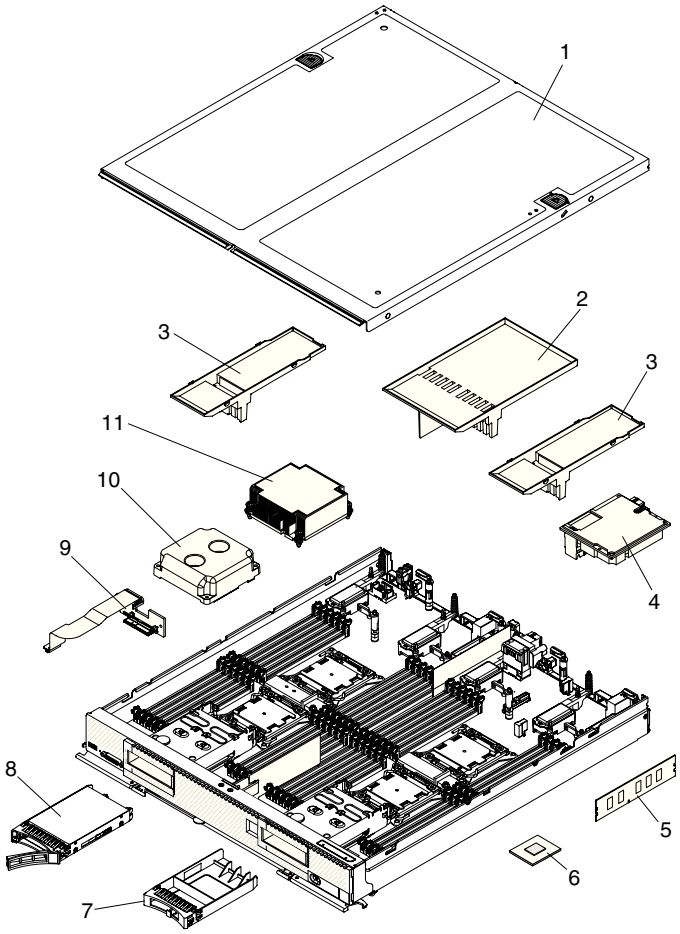

Replaceable components consist of consumable parts, structural parts, and customer replaceable units (CRUs):

- **Consumable parts:** Purchase and replacement of consumable parts (components, such as batteries and printer cartridges, that have depletable life) is your responsibility. If IBM acquires or installs a consumable part at your request, you will be charged for the installation.
- **Structural parts:** Purchase and replacement of structural parts (components such as the top cover and bezel) is your responsibility. If IBM acquires or installs a structural part at your request, you will be charged for the installation.

© Copyright IBM Corp. 2012

- **Tier 1 customer replaceable unit (CRU):** Replacement of Tier 1 CRUs is your responsibility. If IBM installs a Tier 1 CRU at your request without a service contract, you will be charged for the installation.
- **Tier 2 customer replaceable unit:** You may install a Tier 2 CRU yourself or request IBM to install it, at no additional charge, under the type of warranty service that is designated for your compute node. Tier 2 CRUs should be installed only by trained service technicians.

For information about the terms of the warranty and getting service and assistance, see the *Warranty Information* document.

Index	Description	CRU part number (Tier 1)	CRU part number (Tier 2)
1	Top cover (see "Consumable parts")		
2	Center Air baffle	00D6314	
3	Air baffle above DIMMs (see "Consumable parts")		
4	IBM Flex System FC3172 2-port 8 Gb FC Adapter	69Y1941	
4	IBM Flex System F5022 2-port 16 Gb FC Adapter	88Y6373	
4	IBM Flex System IB6132 2-port FDR Infiniband Adapter	90Y3457	
4	IBM Flex System EN4132 2-port 10 Gb Ethernet Adapter	90Y3469	
4	IBM Flex System EN2024 4-port 1 Gb Ethernet Adapter	49Y7902	
4	IBM Flex System CN4054 10 Gb Virtual Fabric Adapter	90Y3557	
4	IBM Flex System FC3052 2-Port 8 Gb FC Adapter	95Y2378	
4	IBM ServeRAID-M5115 SAS/SATA RAID Controller	00D5073	
5	Memory, 8 GB 2R x 4 2 Gbit DDR-3 1600 MHz 1.5V LP RDIMM (Type 2584, models C2x, C4x) (Type 7917, models F2x, F4x)	90Y3111	
5	Memory, 4 GB 1R x 4 2 Gbit DDR-3 1333 MHz 1.35V LP RDIMM	49Y1424	
5	Memory, 4GB 2R x 8 2 Gbit DDR-3 1333 MHz 1.35V LP RDIMM	49Y1425	
5	Memory, 8 GB 2R x4 2 Gbit DDR-3 1333 MHz 1.35V LP RDIMM (Type 7917, models A2x, A4x, B2x, B4x, C2x, C4x, D2x, D4x)	49Y1415	
5	Memory, 16 GB 2R x 4 4 Gbit DDR-3 1333 MHz 1.35V LP RDIMM	49Y1565	
5	Memory, 16 GB 4R x 4 2 Gbit DDR-3 1333 MHz 1.35V LP LR-DIMM)	49Y1569	
5	Memory, 4 GB 1R x 4 2 Gbit DDR-3 1600MHz 1.5V LP RDIMM	49Y1561	
5	Memory, 16 GB 2R x 4 4 Gbit DDR-3 1600MHz 1.5V LP RDIMM	00D4970	
5	Memory, 32 GB 4R x 4 4 Gbit DDR-3 1333MHz 1.35V LP LR-DIMM	90Y3107	
6	Intel Xeon Processor E5-4603, 4C 2.0 GHz 10 MB Cache 1066 MHz 95W (Type 7917, models A2x, A4x)		88Y6264
6	Intel Xeon Processor E5-4607, 6C 2.2 GHz 12 MB Cache 1066 MHz 95W (Type 7917, models B2x, B4x)		69Y3101
6	Intel Xeon Processor E5-4620, 8C 2.2 GHz 16 MB Cache 1333 MHz 95W (Type 7917, models D2x, D4x)		69Y3113
6	Intel Xeon Processor E5-4610, 6C 2.4 GHz 15 MB Cache 1333 MHz 95W (Type 2584, models C2x, C4x) (Type 7917, models C2x, C4x)		69Y3107
6	Intel Xeon Processor E5-4640, 8C 2.4 GHz 20 MB Cache 1600 MHz 95W		90Y9056
6	Intel Xeon Processor E5-4650, 8C 2.7 GHz 20 MB Cache 1600 MHz 130W (Type 7917, models F2x, F4x)		69Y3119

Index	Description	CRU part number (Tier 1)	CRU part number (Tier 2)
6	Intel Xeon Processor E5-4650L, 8C 2.6GHz 20MB Cache 1600 MHz 115W		88Y7459
6	Intel Xeon Processor E5-4617, 6C 2.9 GHz 15 MB Cache 1600 MHz 130W		90Y9050
7	Filler, 2.5 inch hard disk drive bay (see "Consumable parts")		
8	Hard disk drive, 500 GB 7.2K NL 6 Gbps SAS 2.5 inch G2 hot-swap	90Y8954	
8	Hard disk drive, 900 GB 10K 6 Gbps SAS 2.5 inch slim hot-swap	81Y9651	
8	Hard disk drive, 146 GB 15K 6 Gbps SAS 2.5 inch SFF G2 hot-swap	90Y8927	
8	Hard disk drive, 300 GB 15K 6 Gbps SAS 2.5 inch slim hot-swap	81Y9671	
8	Hard disk drive, 200 GB SATA 2.5 inch SFF HS High IOPS SSD	43W7721	
8	Hard disk drive, 1 TB 7.2K NL SAS 2.5 inch' SFF	81Y9691	
8	Hard disk drive, 250 GB 7.2K SATA 2.5 inch' SFF	81Y9723	
8	Hard disk drive, 500 GB 7.2K SATA 2.5 inch' SFF	81Y9727	
8	Hard disk drive, 1 TB 7.2K 6 Gbps SATA 2.5 inch' SFF	81Y9731	
8	Hard disk drive, 600 GB 10K 6 Gbps SAS 2.5 inch SFF G2 hot-swap	90Y8873	
8	Hard disk drive, 300 GB 10K 6 Gbps SAS 2.5 inch SFF G2 hot-swap	90Y8878	
8	Self encrypting drive, 300 GB 10K 6Gbps SAS 2.5 inch SFF slim hot-swap	44W2265	
8	Solid state drive, 50 GB SATA 1.8 inch MLC	43W7729	
8	Solid state drive, 200 GB SATA 1.8 inch MLC	40K6897	
8	Solid state drive, 128 GB 6 Gbps SATA 2.5" SFF slim hot-swap	90Y8649	
8	Solid state drive, 256 GB 6 Gbps SATA 2.5" SFF slim hot-swap	90Y8644	
9	Cable assemble, SAS (Type 2584, models C2x, C4x) (Type 7917, models A2x, A4x, B2x, B4x, C2x, C4x, D2x, D4x, F2x, F4x)	00D6327	
10	Filler, microprocessor socket (see "Consumable parts")		
11	Heat sink, front microprocessor		00D6315
11	Heat sink, rear microprocessor (Type 2584, models C2x, C4x) Type 7917, models A2x, A4x, B2x, B4x, C2x, C4x, D2x, D4x, F2x, F4x)		00D6316
	2 GB USB Memory Key	42D0545	
	Adapter connector retention kit	46M2827	
	Alcohol wipes		59P4739
	Base assembly (includes chassis and system board) with LOM (Type 2584, model C4x) (Type 7917, model A4x, B4x, C4x, D4x, F4x)		88Y6237
	Base assembly (includes chassis and system board) without LOM (Type 2584, model C2x) (Type 7917, models A2x, B2x, C2x, D2x, F2x)		88Y6238
	Bezel, front assembly	46M2831	
	Fabric connector (Type 2584, model C4x) (Type 7917, model A4x, B4x, C4x, D4x, F4x)		81Y5175
	Hard disk drive backplane, SAS single 2.5 inch (Type 2584, models C2x, C4x) (Type 7917, models A2x, A4x, B2x, B4x, C2x, C4x, D2x, D4x, F2x, F4x)	88Y6246	
	IBM Flex System console breakout cable (models AC1, MC1, CTO)	81Y5287	
	Label kit	00D6313	
	Light path LED card	81Y5290	

Index	Description	CRU part number (Tier 1)	CRU part number (Tier 2)
	Microprocessor installation tool		94Y9955
	Miscellaneous parts kit		46M2832
	RFID label tag assembly - EMEA	00E6323	
	RFID label tag assembly - US	74Y8800	
	ServeRAID-M5100 series hard disk drive backplane	44E4763	
	ServeRAID-M5100 series Flex cable assembly	00D5089	
	ServeRAID-M5100 series solid state drive Flex expansion cable	00D5078	
	ServeRAID-M5100 Series super capacitor	81Y4579	
	ServeRAID-M5100 Series super capacitor power cable	44E4767	
	Thermal grease kit		41Y9292

Consumable parts

Consumable parts are not covered by the IBM Statement of Limited Warranty. The following consumable parts are available for purchase from the retail store.

Table 4. Consumable parts

Index	Description	Consumable part number
1	Top cover (when ordering this part, order the Label kit (part number (00D6313)	46M2830
3	Air baffle above DIMMs (Type 2584, models C2x, C4x) (Type 7917, models A2x, A4x, B2x, B4x, C2x, C4x, D2x, D4x, F2x, F4x)	81Y5177
7	Filler, 2.5 inch hard disk drive bay (Type 2584, models C2x, C4x) (Type 7917, models A2x, A4x, B2x, B4x, C2x, C4x, D2x, D4x, F2x, F4x)	44T2248
10	Filler, microprocessor socket (Type 2584, models C2x, C4x) (Type 7917, models : A2x, A4x, B2x, B4x, C2x, C4x, D2x, D4x, F2x, F4x)	00D6325
	CMOS battery, 3.0 volt (all models)	33F8354
	CRM handle kit	46M2828
	Hard disk drive cage, SAS	46M2829
	Rear bulkhead assembly full wide	46M2833
	ServeRAID-M5115 left-side air baffle	00D5080
	ServeRAID-M5115 center air baffle	46C9933

To order a consumable part, complete the following steps:

1. Go to http://www.ibm.com.
2. From the **Products** menu, select **Upgrades, accessories & parts**.
3. Click **Obtain maintenance parts**; then, follow the instructions to order the part from the retail store.

If you need help with your order, call the toll-free number that is listed on the retail parts page, or contact your local IBM representative for assistance.

Chapter 6. Troubleshooting

Use this information to diagnose and correct problems that might occur in your IBM Flex System x440 Compute Node.

The information in this section describes tools and procedures for solving hardware and software problems. If you cannot diagnose and correct a problem by using the information, see "Getting help and technical assistance," on page 555 for more information.

Service bulletins

IBM continually updates the support website with tips and techniques that you can use to solve problems that you might have with the IBM Flex System x440 Compute Node.

To find service bulletins that are available for the IBM Flex System x440 Compute Node, go to http://www.ibm.com/supportportal/ and search for the terms `7917` or `2584` and `retain`.

Diagnostic tools

Use this information to review the diagnostic tools to diagnose and solve hardware-related problems.

Light path diagnostics

Use this information as an overview of light path diagnostics.

Light path diagnostics is a system of LEDs above the control panel and on various internal components of the compute node. When an error occurs, LEDs can be lit throughout the compute node to help identify the source of the error.

Viewing the light path diagnostics LEDs

Use this information to locate and identify the light path diagnostics LEDs.

Before you work inside the compute node to view light path diagnostics LEDs, read "Safety" on page v and "Installation guidelines" on page 487.

If an error occurs, view the light path diagnostics LEDs in the following order:

1. Look at the control panel on the front of the compute node.

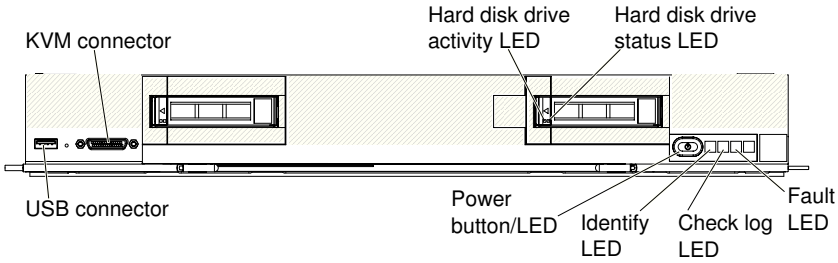

   - If the check log LED is lit, it indicates that an Automatic BIOS Recovery has occurred. The compute node will start by using the backup UEFI image.

© Copyright IBM Corp. 2012

- If the fault LED is lit, it indicates that an error has occurred; view the light path diagnostics panel and LEDs to isolate the failing component.

2. To view the light path diagnostics LEDs, select one of the following procedures:
   - You can view the LEDs through the CMM **led** command, the CMM web interface, or IBM Flex System Manager management software.
     - For more information about the CMM **led** command, see the "IBM Flex System Chassis Management Module: Command-Line Interface Reference Guide" at http://ralfss21.raleigh.ibm.com:8099/help/topic/com.ibm.acc.cmm.doc/cli_command_led.html.
     - From the CMM web interface, select **Blade Servers** from the **Chassis Management** menu. All fields and options are described in the CMM web interface online help.
     - For more information about IBM Flex System Manager management software, see the "IBM Flex System Manager Software: Installation and Service Guide" at http://ralfss21.raleigh.ibm.com:8099/help/topic/com.ibm.acc.8731.doc/product_page.html.
   - If you are in the same location as the compute node, you can complete the following steps:
     a. Remove the compute node from the IBM Flex System chassis, (see “Removing a compute node from a chassis” on page 489 for instructions).
     b. Carefully lay the compute node on a flat, static-protective surface.
     c. Open the compute node cover (see “Removing the compute node cover” on page 498 for instructions).
     d. Remove the air baffles that are installed over the DIMM connectors.
     e. Press the power button. When you press the power button, LEDs on the light path diagnostics panel and the system board will be lit if there are any hardware-related issues.

        Note: The power source for light path diagnostics is designed to last only a short time. If you press the power button and the light path diagnostics LED lights, light path diagnostics is charged to light the LEDs.

The following illustration shows the LEDs on the light path diagnostics panel.

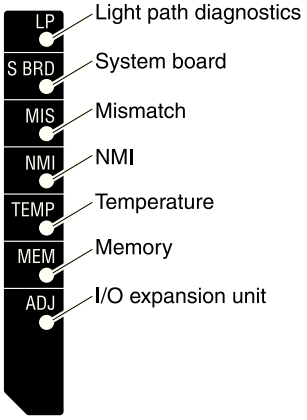

The following illustration shows the locations of the light path diagnostics LEDs on the system board.

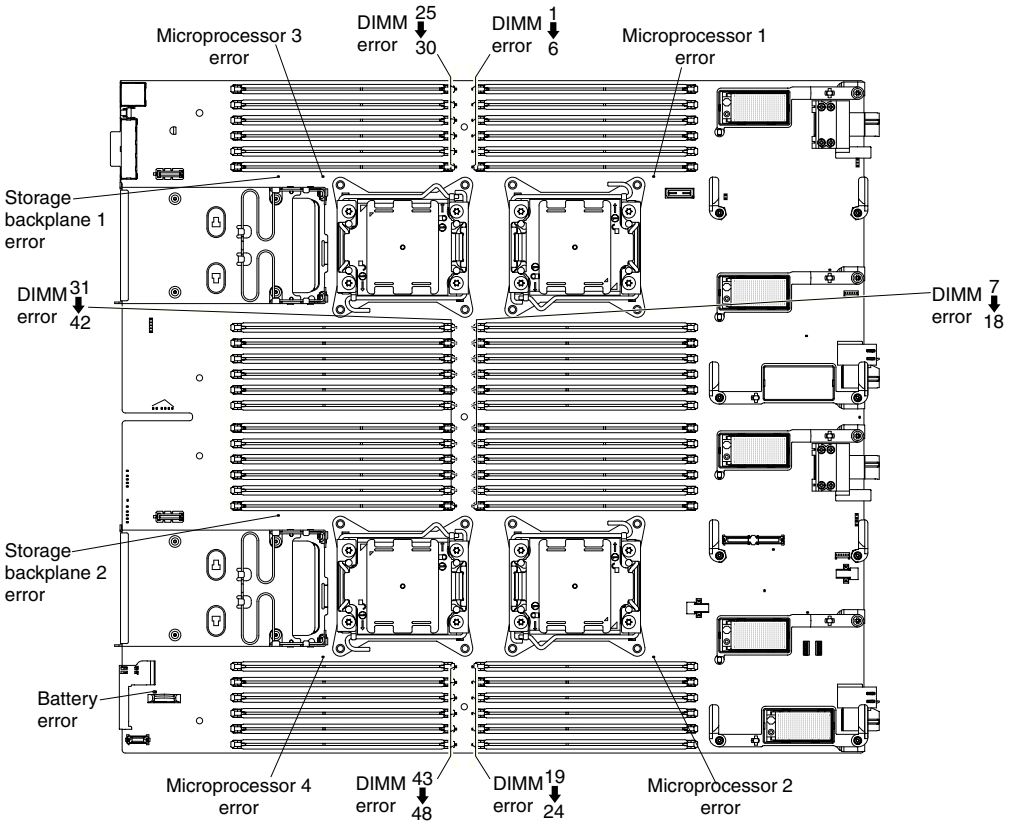

Light path diagnostics LEDs

Use this information to diagnose possible errors that are indicated by the light path diagnostics LEDs.

The following table describes the LEDs on the light path diagnostics panel and the light path diagnostics LEDs on the system board. LEDs on the light path card are visible from the top of the compute node. See "Viewing the light path diagnostics LEDs" on page 57 for information about lighting the LEDs.

Lit light path diagnostics LED	Description
Light path diagnostics	This LED lights when the light path LED card is installed
Memory	The IMM2 lights this LED, the corresponding DIMM error LEDs on the system board and the fault LED when a memory fault has occurred.
Mismatch	The IMM2 lights this LED and the fault LED when a mismatch has occurred between the processors, DIMMs, or hard disk drives within the configuration as reported by POST.
NMI	The IMM2 lights this LED and the fault LED when an nonmaskable interrupt (NMI) occurs.
Spare	Reserved for future use
System board	The IMM2 lights this LED and the fault LED when a system board error has been detected.
Temperature	The IMM lights this LED and the fault LED when an over-temperature condition has occurred that was critical enough to shut down the compute node.

Table 5. Light path LED errors

Light path diagnostics LED	Description	Action
None	An error has occurred and cannot be isolated, or the IMM2 has failed.	Make sure that the light path diagnostics LED is lit to ensure that there is enough power in the compute node to light the rest of the LEDs.
Battery error	The battery failed.	1. Reseat the battery. 2. Replace the battery. 3. (Trained service technician only) Replace the system-board assembly.
DIMM x error	A memory error occurred.	1. Make sure that the DIMM that is indicated by the lit LED is supported. 2. Reseat the DIMM that is indicated by the lit LED. 3. Replace the DIMM that is indicated by the lit LED (see "Removing a DIMM" on page 501, and "Installing a DIMM" on page 502) **Note:** Multiple DIMM LEDs do not necessarily indicate multiple DIMM failures. If more than one DIMM LED is lit, reseat or replace one DIMM at a time until the error is corrected (see "Removing a DIMM" on page 501, and "Installing a DIMM" on page 502)
Light path diagnostics LED	System board light path diagnostics LEDs have power.	Check for error LEDs that are lit on the system board assembly.

Table 5. Light path LED errors (continued)

Light path diagnostics LED	Description	Action
Microprocessor x error	The microprocessor has failed, or overheated, or the boot microprocessor is missing.	1. Check the CMM log for more information. Perform the appropriate action. 2. If the log shows that a microprocessor is disabled or that a microprocessor IERR has occurred, perform the appropriate action. 3. (Trained service technician only) Reset the microprocessor that is indicated by the lit LED. 4. (Trained service technician only) Replace the microprocessor that is indicated by the lit LED.
Microprocessor mismatch	The microprocessors do not match.	Make sure that all installed microprocessors are identical (number of cores, cache size, type, clock speed, and internal / external clock frequencies).
NMI	The system board failed.	1. Reinsert the compute node, and then restart the compute node. Check the IMM event log for information about the error. 2. (Trained service technician only) Replace the system-board assembly.
System board	The system board failed.	(Trained service technician only) Replace the system-board assembly.
Temperature	The system temperature has exceeded the threshold level	1. Check the function of the shared compute node and chassis unit resources. 2. Make sure that the room temperature is not too high.
Hard disk drive	A hard disk drive failed.	Run the fixed disk or attached disk diagnostic test. If the drive passes the test but continues to have a problem replace the hard disk drive (see “Removing a hot-swap hard disk drive” on page 522 and “Installing a hot-swap hard disk drive” on page 523)..

Table 5. Light path LED errors (continued)

Light path diagnostics LED	Description	Action
Adapter fault	An adapter failed.	Run the adapter card diagnostics test. If adapter passes the test but continues to have a problem, replace the adapter.

Table 6. System board diagnostic LED information

LED	Color	LED name	Description
D9001 D9004	Green	Checkpoint LEDs (MSD)	These LEDs represent checkpoint display codes in binary.
D9005 D9008	Green	Checkpoint LEDs (LSD)	These LEDs represent checkpoint display codes in binary.
D9009	Green	FPGA heartbeat	This LED will light when there is activity on the FPGA.
DVL01	Yellow	Battery error	The IMM2 lights this LED and the fault LED when the battery is defective.
DBL01	Yellow	IMM fault	The IMM2 lights this LED and the fault LED when a problem has been detected with the IMM2.
DPL00	Yellow	CPU 1 error	The IMM2 lights this LED and the fault LED when microprocessor 1 is defective or when no processor is installed in the microprocessor 1 socket.
DPL01	Yellow	CPU 2 error	The IMM2 lights this LED and the fault LED when microprocessor 2 is defective.
DPL02	Yellow	CPU 3 error	The IMM2 lights this LED and the fault LED when microprocessor 3 is defective.
DPL03	Yellow	CPU 4 error	The IMM2 lights this LED and the fault LED when microprocessor 4 is defective.
DVL02	Yellow	DC fault	The IMM2 lights this LED and the fault LED when there is a power fault on one of the power rails.
DML01 DML48	Yellow	DIMM x error	The IMM2 lights any of these LEDs and the fault LED when any DIMMs 1 – 48 are defective.
DLLACT10	Green	Ethernet 1-0 activity	This LED lights when there is Ethernet activity on port 0 of LOM controller 1.
DLLACT11	Green	Ethernet 1-1 activity	This LED lights when there is Ethernet activity on port 1 of LOM controller 1.
DLLACT20	Green	Ethernet 2-0 activity	This LED lights when there is Ethernet activity on port 0 of LOM controller 2.
DLLACT21	Green	Ethernet 2-1 activity	This LED lights when there is Ethernet activity on port 1 of LOM controller 2.
DLLUP10	Green	Ethernet 1-0 link	This LED lights when port 0 on LOM controller 1 is connected to the network.
DLLUP11	Green	Ethernet 1-1 link	This LED lights when port 1 on LOM controller 1 is connected to the network.

Table 6. System board diagnostic LED information (continued)

LED	Color	LED name	Description
DLLUP20	Green	Ethernet 2-0 link	This LED lights when port 0 on LOM controller 2 is connected to the network.
DLLUP21	Green	Ethernet 2-1 link	This LED lights when port 1 on LOM controller 2 is connected to the network.
DLPWROK1	Green	Ethernet 1 power OK	This LED lights when power to LOM controller 1 is on and working properly.
DLPWROK2	Green	Ethernet 2 power OK	This LED lights when power to LOM controller 2 is on and working properly.
DPWRFAULT	Yellow	Power fault	This LED lights when there is an overcurrent fault on one of the 12 V power rails.
DS6	Yellow	ETE standby power disable	This LED lights when standby power on the ETE sidecar is disabled.
DS862	Green	RTMM heartbeat	This LED lights when there is activity on the RTMM.
DS913	Green	IMM heartbeat	This LED lights when there is activity on the IMM2.
DSL01	Yellow	SAS back plane 1 error	The IMM lights this LED and the fault LED when there is a problem with SAS backplane 1.
DSL02	Yellow	SAS Back Plane 2 error	The IMM2 light this LED and the fault LED when there is a problem with SAS backplane 2.
DSAS_LF10	Yellow	SAS 1-0 link failure	The IMM lights this LED and the fault LED when there is a fault with the link between the SAS controller and SAS Port 0 on SAS backplane 1.
DSAS_LF11	Yellow	SAS 1-1 link failure	The IMM lights this LED and the fault LED when there is a fault with the link between the SAS controller and SAS Port 1 on SAS backplane 1.
DSAS_LF20	Yellow	SAS 2-0 link failure	The IMM2 lights this LED when there is a fault with the link between the SAS controller and SAS port 0 on SAS backplane 2.
DSAS_LF21	Yellow	SAS 2-1 link failure	The IMM2 lights this LED when there is a fault with the link between the SAS controller and SAS port 1 on SAS backplane 2.
DSERROR	Yellow	SAS error	This LED lights when there is a problem with the LSI2004 SAS controller.
DSHB	Green	SAS heartbeat	This LED lights when there is activity on the LSI2004 SAS controller.

IMM event log

Use this information as an overview of the IMM event log.

The integrated management module II (IMM2) consolidates the system-management processor functionality, video controller, and remote presence

capabilities in a single chip on the system board. The IMM2 monitors all components of the compute node and posts events in the IMM event log. In addition, most events are also sent to the Chassis Management Module event log. You can view the IMM event log through the Dynamic System Analysis (DSA) program (as the ASM event log).

To diagnose and resolve IMM error codes, see “IMM messages” on page 67.

Viewing event logs through the Setup utility

You can view the IMM and POST events through the Setup utility.

Procedure

To view the POST event log or system-event log, complete the following steps:

1. Connect a keyboard, monitor, and mouse to the console breakout cable and connect the console breakout cable to the compute node.
2. Turn on the compute node.
3. When the prompt `<F1> Setup` is displayed, press F1. If you have set both a power-on password and an administrator password, you must type the administrator password to view the event logs.
4. Select **System Event Logs** and use one of the following procedures:
   - To view the POST event log, select **POST Event Viewer**.
   - To view the system-event log, select **System Event Log**.

Viewing event logs without restarting the compute node

Methods are available for you to view one or more event logs without having to restart the compute node.

You can view the Chassis Management Module event log in the IBM Flex System Manager Chassis Manager, or through the **Event Log** link in IBM Flex System Manager management software. For more information about IBM Flex System Manager management software, see the "IBM Flex System Manager Software: Installation and Service Guide" at http://ralfss21.raleigh.ibm.com:8099/help/topic/com.ibm.acc.8731.doc/product_page.html.

You can also view the Chassis Management Module event log through the **Event Log** link by using the CMM **displaylog** command or the CMM web interface.

Note: If event IDs are not currently displayed in the Event Log page, you can enable them. To do so, click **Filter Events** and select the **Event ID** check box under **Visible columns**.

- For more information about the CMM **displaylog** command, see the "IBM Flex System Chassis Management Module: Command-Line Interface Reference Guide" at http://ralfss21.raleigh.ibm.com:8099/help/topic/com.ibm.acc.cmm.doc/cli_command_displaylog.html.
- From the CMM web interface, select **Event Log** from the **Events** menu. For more information, see the "IBM Flex System Chassis Management Module: User's Guide" at http://publib.boulder.ibm.com/infocenter/flexsys/information/topic/com.ibm.acc.cmm.doc/cmm_user_guide.html. All fields and options are described in the CMM web interface online help.

If you have installed DSA Portable Edition, you can use it to view the system-event log (as the IPMI event log), the operating-system event logs, or the merged DSA log. You can also use DSA Preboot to view these logs, although you

must restart the compute node to use DSA Preboot. To install Portable DSA or DSA Preboot or to download a DSA Preboot CD image, go to http://www.ibm.com/support/entry/portal/docdisplay?lndocid=SERV-DSA.

If IPMItool is installed in the compute node, you can use it to view the system-event log. Most recent versions of the Linux operating system come with a current version of IPMItool. For information about IPMItool, complete the following steps.

Note: Changes are made periodically to the IBM website. The actual procedure might vary slightly from what is described in this document.

1. Go to http://www.ibm.com/developerworks/.
2. Click **Linux**.
3. Click the **Linux blueprints** tab.
4. Click **Blueprints for Linux on IBM systems**, and then click **Using Intelligent Platform Management Interface (IPMI) on IBM Linux platforms**.

The following table describes the methods that you can use to view the event logs, depending on the condition of the compute node. The first two conditions generally do not require that you restart the compute node.

Table 7. Methods for viewing event logs

Condition	Action
The compute node is not hung and is connected to a network.	Use any of the following methods: • In a web browser, type the IP address of the Chassis Management Module and go to the Event Log page. • Run Portable or Installable DSA to view the event logs or create an output file that you can send to IBM Support. • Use IPMItool to view the system-event log.
The compute node is not hung and is not connected to a network.	Use IPMItool locally to view the system-event log.
The compute node is hung.	Use any of the following methods: • If DSA Preboot is installed, restart the compute node and press F2 to start DSA Preboot and view the event logs. • If DSA Preboot is not installed, insert the DSA Preboot CD and restart the compute node to start DSA Preboot and view the event logs. • Alternatively, you can restart the compute node and press F1 to start the Setup utility and view the POST event log or system-event log. For more information, see "Viewing event logs through the Setup utility" on page 64.

IBM Dynamic System Analysis Preboot diagnostic program

IBM Dynamic System Analysis (DSA) Preboot diagnostic program collects and analyzes system information to aid in diagnosing compute node problems.

DSA Preboot performs the following tasks:

- Collects system information into a compressed XML file that you can send to IBM Support
- Provides a bootable image that you can use to run extended hardware tests independent of the operating system or applications
- Collects the version and license information from local VMware ESXi hypervisor software

DSA Preboot might appear to be unresponsive when you start the program. This is normal operation while the program loads.

To obtain DSA code and the *Dynamic System Analysis Installation and User's Guide*, go to http://www.ibm.com/support/entry/portal/docdisplay?lndocid=SERV-DSA.

To diagnose and resolve DSA messages, see "DSA messages" on page 457.

Running DSA Preboot

Use this information to run DSA Preboot.

About this task

To run the DSA Preboot diagnostic programs, complete the following steps:

1. If the compute node is running, turn off the compute node and all attached devices.
2. Turn on all attached devices; then, turn on the compute node.
3. When the prompt `<F2> Diagnostics` is displayed, press F2.

   Note: DSA Preboot might appear to be unresponsive for an unusual length of time when you start the program. This is normal operation while the program loads.
4. Select **Quit to DSA** to exit from the stand-alone memory diagnostic program.

   Note: After you exit from the stand-alone memory diagnostic environment, you must restart the compute node to access the stand-alone memory diagnostic environment again.
5. Enter `gui` to start the DSA graphical user interface, or select **cmd** to display the DSA interactive menu.
6. From the diagnostic programs screen, select the test that you want to run, and follow the instructions on the screen. For additional information, see the *Dynamic System Analysis Installation and User's Guide*, which is available at http://www.ibm.com/support/entry/portal/docdisplay?lndocid=SERV-DSA.

Help for DSA is available. For help about the DSA CLI, enter `help` in the command line. For help with the DSA user interface, press F1. Pressing F1 within a help panel displays additional online documentation.

Diagnostic text messages

Use this information to understand the diagnostic text messages that are displayed while the tests are running.

A diagnostic text message contains one of the following results:

- **Passed:** The test was completed without any errors.
- **Failed:** The test detected an error.

- **User Aborted:** You stopped the test before it was completed.
- **Not Applicable:** You attempted to test a device that is not present in the compute node.
- **Aborted:** The test could not proceed because of the compute node configuration.
- **Warning:** The test could not be run. There was no failure of the hardware that was being tested, but there might be a hardware failure elsewhere, or another problem prevented the test from running; for example, there might be a configuration problem, or the hardware might be missing or is not being recognized.

The result is followed by an error code or other additional information about the error.

Viewing the test results

Use this information to view the test results.

About this task

You can use one of the following methods to access the test log when the tests are completed:

- From the DSA command line, issue the DSA CLI View command or select the **Diagnostic Event Log** option from the DSA graphical user interface (GUI).
- From the DSA interactive menu, select the **getextendedresults** option.
- From the DSA interactive menu, select the **View** option to view all of the collected results and error log data.
- In the DSA GUI, select **DSA Error Log** from the System Information page.

You can send the DSA error log file to IBM Support to aid in diagnosing the compute node problems, or you can use the DSA CLI copy command to copy the log to an external USB device.

Event messages

Use this information to review event messages and resolve many errors.

IMM messages

When a hardware event is detected by the IMM2 on an IBM Flex System x440 Compute Node, the IMM2 logs that event in the system-event log in the compute node. In addition, the IMM2 sends that event to the CMM and to the IBM Flex System Manager management software.

For each event code, the following fields are displayed:

Event identifier
: A hexadecimal identifier that uniquely identifies an event or class of events. In this documentation, the event identifiers are prefixed with 0x and followed by eight characters.

Event description
: The logged message string that appears for an event. When the event string is displayed in the event log, information such as a specific component is displayed. In this documentation, that additional information appears as variables, such as [arg1] or [arg2].

Explanation
: Additional information to explain why the event occurred.

Severity

An indication of the level of concern for the condition. In the event log, the severity is abbreviated to the first character.

- **Info:** The event was recorded for audit purposes, usually a user action or a change of states that is normal behavior.
- **Warning:** The event is not as severe as an error, but if possible, the condition should be corrected before it becomes an error. It might also be a condition that requires additional monitoring or maintenance.
- **Error:** The event is a failure or critical condition that impairs service or an expected function.

Alert Category

Similar events are grouped in categories. The alert category is in the following format:

severity - device

severity is one of the following severity levels:

- **Critical:** A key component in the server is no longer functioning.
- **Warning:** The event might progress to a critical level.
- **System:** The event is the result of a system error or a configuration change.

device component is the specific device in the compute node that caused the event to be generated.

Alert Category

Similar events are grouped together in categories. Information in the alert category field is displayed in the following format:

severity - device component

severity is one of the following severity levels:

- Informational
- Warning
- Error

device component is the specific device in the compute node that caused the event to be generated.

Serviceable

Whether user action is required to correct the problem.

CIM Information

The prefix of the message ID and the sequence number that is used by the CIM message registry.

SNMP Trap ID

The SNMP trap ID that is found in the SNMP alert management information base (MIB).

Automatically contact Service

If this field is set to **Yes**, and you have enabled Electronic Service Agent™ (ESA) on IBM Flex System Manager management software, IBM Support will be notified automatically if the event is generated.

While you wait for IBM Support to call, you can perform the recommended actions for the event.

User response

The actions that you should perform to solve the event.

Perform the steps listed in this section in the order shown until the problem is solved. After you perform all of the actions that are described in this field, if you cannot solve the problem, contact IBM Support.

Note: This list includes error codes and messages that might not apply to this machine type and model.

40000001-00000000 Management Controller [arg1] Network Initialization Complete.

Explanation: The IMM network subsystem initialization has completed.

May also be shown as 4000000100000000 or 0x4000000100000000

Severity: Info

Alert Category: System - IMM Network event

Serviceable: No

CIM Information: **Prefix:** IMM and **ID:** 0001

SNMP Trap ID: 37

Automatically notify Support: No

User response: Information only; no action is required.

40000002-00000000 Certificate Authority [arg1] has detected a [arg2] Certificate Error.

Explanation: A problem has occurred with the SSL Server, SSL Client, or SSL Trusted CA certificate that has been imported into the IMM. The imported certificate must contain a public key that corresponds to the key pair that was previously generated by the **Generate a New Key and Certificate Signing Request** link.

May also be shown as 4000000200000000 or 0x4000000200000000

Severity: Error

Alert Category: System - other

Serviceable: No

CIM Information: **Prefix:** IMM and **ID:** 0002

SNMP Trap ID: 22

Automatically notify Support: No

User response: Make sure that the certificate that you are importing is correct and properly generated.

40000003-00000000 Ethernet Data Rate modified from [arg1] to [arg2] by user [arg3].

Explanation: The specified user has changed the Ethernet data rate of the Integrated Management Module external network interface to the specified value.

May also be shown as 4000000300000000 or 0x4000000300000000

Severity: Info

Alert Category: none

Serviceable: No

CIM Information: **Prefix:** IMM and **ID:** 0003

SNMP Trap ID:

Automatically notify Support: No

User response: Information only; no action is required.

40000004-00000000 Ethernet Duplex setting modified from [arg1] to [arg2] by user [arg3].

Explanation: The specified user has changed the Ethernet duplex setting of the Integrated Management Module external network interface to the specified value.

May also be shown as 4000000400000000 or 0x4000000400000000

Severity: Info

Alert Category: none

Serviceable: No

CIM Information: **Prefix:** IMM and **ID:** 0004

SNMP Trap ID:

Automatically notify Support: No

User response: Information only; no action is required.

40000005-00000000 Ethernet MTU setting modified from [arg1] to [arg2] by user [arg3].

Explanation: The specified user has changed the Ethernet maximum transmission unit (MTU) setting of the Integrated Management Module external network interface to the specified value.

May also be shown as 4000000500000000 or 0x4000000500000000

Severity: Info

Alert Category: none

Serviceable: No

CIM Information: **Prefix:** IMM and **ID:** 0005

SNMP Trap ID:

Automatically notify Support: No

User response: Information only; no action is required.

40000006-00000000 Ethernet locally administered MAC address modified from [arg1] to [arg2] by user [arg3].

Explanation: The specified user has changed the Ethernet locally administered MAC address of the Integrated Management Module external network interface to the specified value

May also be shown as 4000000600000000 or 0x4000000600000000

Severity: Info

Alert Category: none

Serviceable: No

CIM Information: **Prefix:** IMM and **ID:** 0006

SNMP Trap ID:

Automatically notify Support: No

User response: Information only; no action is required.

40000007-00000000 Ethernet interface [arg1] by user [arg2].

Explanation: The specified user has enabled or disabled the Ethernet interface.

May also be shown as 4000000700000000 or 0x4000000700000000

Severity: Info

Alert Category: none

Serviceable: No

CIM Information: **Prefix:** IMM and **ID:** 0007

SNMP Trap ID:

Automatically notify Support: No

User response: Information only; no action is required.

40000008-00000000 Hostname set to [arg1] by user [arg2].

Explanation: The specified user has changed the Integrated Management Module host name.

May also be shown as 4000000800000000 or 0x4000000800000000

Severity: Info

Alert Category: System - IMM Network event

Serviceable: No

CIM Information: **Prefix:** IMM and **ID:** 0008

SNMP Trap ID: 37

Automatically notify Support: No

User response: Information only; no action is required.

40000009-00000000 IP address of network interface modified from [arg1] to [arg2] by user [arg3].

Explanation: The specified user has changed the IP address of the Integrated Management Module external network interface to the specified value.

May also be shown as 4000000900000000 or 0x4000000900000000

Severity: Info

Alert Category: System - IMM Network event

Serviceable: No

CIM Information: **Prefix:** IMM and **ID:** 0009

SNMP Trap ID: 37

Automatically notify Support: No

User response: Information only; no action is required.

4000000a-00000000 IP subnet mask of network interface modified from [arg1] to [arg2] by user [arg3].

Explanation: The specified user has changed the subnet mask of the Integrated Management Module external network interface to the specified value.

May also be shown as 4000000a00000000 or 0x4000000a00000000

Severity: Info

Alert Category: none

Serviceable: No

CIM Information: **Prefix:** IMM and **ID:** 0010

SNMP Trap ID:

Automatically notify Support: No

User response: Information only; no action is required.

4000000b-00000000 IP address of default gateway modified from [arg1] to [arg2] by user [arg3].

Explanation: The specified user has changed the gateway address of the Integrated Management Module external network interface to the specified value.

May also be shown as 4000000b00000000 or 0x4000000b00000000

Severity: Info

Alert Category: none

Serviceable: No

CIM Information: **Prefix:** IMM and **ID:** 0011

SNMP Trap ID:

Automatically notify Support: No

User response: Information only; no action is required.

4000000c-00000000 OS Watchdog response [arg1] by [arg2] .

Explanation: This message is for the use case where an OS Watchdog has been enabled or disabled by a user.

May also be shown as 4000000c00000000 or 0x4000000c00000000

Severity: Info

Alert Category: none

Serviceable: No

CIM Information: **Prefix:** IMM and **ID:** 0012

SNMP Trap ID:

Automatically notify Support: No

User response: Information only; no action is required.

4000000d-00000000 DHCP[[arg1]] failure, no IP address assigned.

Explanation: A DHCP server has failed to assign an IP address to the IMM.

May also be shown as 4000000d00000000 or 0x4000000d00000000

Severity: Warning

Alert Category: none

Serviceable: No

CIM Information: **Prefix:** IMM and **ID:** 0013

SNMP Trap ID:

Automatically notify Support: No

User response: Complete the following steps until the problem is solved:

1. Make sure that the IMM network cable is connected.
2. Make sure that there is a DHCP server on the network that can assign an IP address to the IMM.

4000000e-00000000 Remote Login Successful. Login ID: [arg1] from [arg2] at IP address [arg3].

Explanation: The specified user has logged in to the Integrated Management Module.

May also be shown as 4000000e00000000 or 0x4000000e00000000

Severity: Info

Alert Category: System - Remote Login

Serviceable: No

CIM Information: **Prefix:** IMM and **ID:** 0014

SNMP Trap ID: 30

Automatically notify Support: No

User response: Information only; no action is required.

4000000f-00000000 Attempting to [arg1] server [arg2] by user [arg3].

Explanation: This message is for the use case where a user is using the Management Controller to perform a power function on the system.

May also be shown as 4000000f00000000 or 0x4000000f00000000

Severity: Info

Alert Category: none

Serviceable: No

CIM Information: **Prefix:** IMM and **ID:** 0015

SNMP Trap ID:

Automatically notify Support: No

User response: Information only; no action is required.

40000010-00000000 Security: Userid: [arg1] had [arg2] login failures from WEB client at IP address [arg3].

Explanation: A user has exceeded the maximum allowed number of unsuccessful login attempts from a web browser and has been prevented from logging in for the lockout period.

May also be shown as 4000001000000000 or 0x4000001000000000

Severity: Warning

Alert Category: System - Remote Login

Serviceable: No

CIM Information: **Prefix:** IMM and **ID:** 0016

SNMP Trap ID: 30

Automatically notify Support: No

User response: Complete the following steps until the problem is solved:

1. Make sure that the correct login ID and password are being used.
2. Have the system administrator reset the login ID or password.

40000011-00000000 Security: Login ID: [arg1] had [arg2] login failures from CLI at [arg3].

Explanation: A user has exceeded the maximum allowed number of unsuccessful login attempts from the command-line interface and has been prevented from logging in for the lockout period.

May also be shown as 4000001100000000 or 0x4000001100000000

Severity: Warning

Alert Category: System - Remote Login

Serviceable: No

CIM Information: **Prefix:** IMM and **ID:** 0017

SNMP Trap ID: 30

Automatically notify Support: No

User response: Complete the following steps until the problem is solved:

1. Make sure that the correct login ID and password are being used.
2. Have the system administrator reset the login ID or password.

40000012-00000000 Remote access attempt failed. Invalid userid or password received. Userid is [arg1] from WEB browser at IP address [arg2].

Explanation: A user has attempted to log in from a web browser by using an invalid login ID or password.

May also be shown as 4000001200000000 or 0x4000001200000000

Severity: Info

Alert Category: System - Remote Login

Serviceable: No

CIM Information: **Prefix:** IMM and **ID:** 0018

SNMP Trap ID: 30

Automatically notify Support: No

User response: Make sure that the correct login ID and password are being used.

40000013-00000000 Remote access attempt failed. Invalid userid or password received. Userid is [arg1] from TELNET client at IP address [arg2].

Explanation: A user has attempted to log in from a Telnet session by using an invalid login ID or password.

May also be shown as 4000001300000000 or 0x4000001300000000

Severity: Info

Alert Category: System - Remote Login

Serviceable: No

CIM Information: **Prefix:** IMM and **ID:** 0019

SNMP Trap ID: 30

Automatically notify Support: No

User response: Make sure that the correct login ID and password are being used.

40000014-00000000 The [arg1] on system [arg2] cleared by user [arg3].

Explanation: The specified user has deleted system log events or audit log events.

May also be shown as 4000001400000000 or 0x4000001400000000

Severity: Info

Alert Category: none

Serviceable: No

CIM Information: **Prefix:** IMM and **ID:** 0020

SNMP Trap ID:

Automatically notify Support: No

User response: Information only; no action is required.

40000015-00000000 Management Controller [arg1] reset was initiated by user [arg2].

Explanation: The Integrated Management Module has been reset. The logs provide additional details.

May also be shown as 4000001500000000 or 0x4000001500000000

Severity: Info

Alert Category: none

Serviceable: No

CIM Information: **Prefix:** IMM and **ID:** 0021

SNMP Trap ID:

Automatically notify Support: No

User response: Information only; no action is required.

40000016-00000000 ENET[[arg1]] DHCP-HSTN=[arg2], DN=[arg3], IP@=[arg4], SN=[arg5], GW@=[arg6], DNS1@=[arg7] .

Explanation: The DHCP server has assigned an IMM IP address and configuration.

May also be shown as 4000001600000000 or 0x4000001600000000

Severity: Info

Alert Category: none

Serviceable: No

CIM Information: **Prefix:** IMM and **ID:** 0022

SNMP Trap ID:

Automatically notify Support: No

User response: Information only; no action is required.

40000017-00000000 ENET[[arg1]] IP-Cfg:HstName=[arg2], IP@=[arg3] ,NetMsk=[arg4], GW@=[arg5] .

Explanation: An IMM IP address and configuration have been assigned using client data.

May also be shown as 4000001700000000 or 0x4000001700000000

Severity: Info

Alert Category: none

Serviceable: No

CIM Information: **Prefix:** IMM and **ID:** 0023

SNMP Trap ID:

Automatically notify Support: No

User response: Information only; no action is required.

40000018-00000000 LAN: Ethernet[[arg1]] interface is no longer active.

Explanation: The IMM Ethernet interface has been disabled.

May also be shown as 4000001800000000 or 0x4000001800000000

Severity: Info

Alert Category: none

Serviceable: No

CIM Information: **Prefix:** IMM and **ID:** 0024

SNMP Trap ID:

Automatically notify Support: No

User response: Information only; no action is required.

40000019-00000000 LAN: Ethernet[[arg1]] interface is now active.

Explanation: The IMM Ethernet interface has been enabled.

May also be shown as 4000001900000000 or 0x4000001900000000

Severity: Info

Alert Category: none

Serviceable: No

CIM Information: **Prefix:** IMM and **ID:** 0025

SNMP Trap ID:

Automatically notify Support: No

User response: Information only; no action is required.

4000001a-00000000 DHCP setting changed to [arg1] by user [arg2].

Explanation: The specified user has changed the DHCP setting of the Integrated Management Module external network interface.

May also be shown as 4000001a00000000 or 0x4000001a00000000

Severity: Info

Alert Category: none

Serviceable: No

CIM Information: **Prefix:** IMM and **ID:** 0026

SNMP Trap ID:

Automatically notify Support: No

User response: Information only; no action is required.

4000001b-00000000 Management Controller [arg1]: Configuration restored from a file by user [arg2].

Explanation: The specified user has restored the Integrated Management Module (IMM) configuration from a previously saved configuration file. Some configuration settings might require that the IMM be restarted before they take effect.

May also be shown as 4000001b00000000 or 0x4000001b00000000

Severity: Info

Alert Category: none

Serviceable: No

CIM Information: **Prefix:** IMM and **ID:** 0027

SNMP Trap ID:

Automatically notify Support: No

User response: Information only; no action is required.

4000001c-00000000 Watchdog [arg1] Screen Capture Occurred.

Explanation: An operating-system error has occurred, and the screen capture was successful.

May also be shown as 4000001c00000000 or 0x4000001c00000000

Severity: Info

Alert Category: System - other

Serviceable: No

CIM Information: **Prefix:** IMM and **ID:** 0028

SNMP Trap ID: 22

Automatically notify Support: No

User response: If there was no operating-system error, complete the following steps until the problem is solved:

1. Reconfigure the watchdog timer to a higher value.
2. Make sure that the IMM Ethernet-over-USB interface is enabled.
3. Reinstall the RNDIS or cdc_ether device driver for the operating system.
4. Disable the watchdog.

If there was an operating-system error, check the integrity of the installed operating system.

4000001d-00000000 Watchdog [arg1] Failed to Capture Screen.

Explanation: An operating-system error has occurred, and the screen capture failed.

May also be shown as 4000001d00000000 or 0x4000001d00000000

Severity: Error

Alert Category: System - other

Serviceable: No

CIM Information: **Prefix:** IMM and **ID:** 0029

SNMP Trap ID: 22

Automatically notify Support: No

User response: Complete the following steps until the problem is solved:

1. Reconfigure the watchdog timer to a higher value.
2. Make sure that the IMM Ethernet over USB interface is enabled.
3. Reinstall the RNDIS or cdc_ether device driver for the operating system.
4. Disable the watchdog.
5. Check the integrity of the installed operating system.
6. Update the IMM firmware. **Important:** Some cluster solutions require specific code levels or coordinated code updates. If the device is part of a cluster solution, verify that the latest level of code is supported for the cluster solution before you update the code.

4000001e-00000000 Running the backup Management Controller [arg1] main application.

Explanation: The IMM was unable to run the primary IMM image and has resorted to running the backup image.

May also be shown as 4000001e00000000 or 0x4000001e00000000

Severity: Warning

Alert Category: System - other

Serviceable: No

CIM Information: **Prefix:** IMM and **ID:** 0030

SNMP Trap ID: 22

Automatically notify Support: No

User response: Update the IMM firmware. **Important:** Some cluster solutions require specific code levels or coordinated code updates. If the device is part of a cluster solution, verify that the latest level of code is supported for the cluster solution before you update the code.

4000001f-00000000 Please ensure that the Management Controller [arg1] is flashed with the correct firmware. The Management Controller is unable to match its firmware to the server.

Explanation: The server does not support the installed IMM firmware version.

May also be shown as 4000001f00000000 or 0x4000001f00000000

Severity: Error

Alert Category: System - other

Serviceable: No

CIM Information: **Prefix:** IMM and **ID:** 0031

SNMP Trap ID: 22

Automatically notify Support: No

User response: Update the IMM firmware to a version that the server supports. **Important:** Some cluster solutions require specific code levels or coordinated code updates. If the device is part of a cluster solution, verify that the latest level of code is supported for the cluster solution before you update the code.

40000020-00000000 Management Controller [arg1] Reset was caused by restoring default values.

Explanation: The default configuration has been restored to the Integrated Management Module.

May also be shown as 4000002000000000 or 0x4000002000000000

Severity: Info

Alert Category: none

Serviceable: No

CIM Information: **Prefix:** IMM and **ID:** 0032

SNMP Trap ID:

Automatically notify Support: No

User response: Information only; no action is required.

40000021-00000000 Management Controller [arg1] clock has been set from NTP server [arg2].

Explanation: The IMM clock has been set to the date and time that are provided by the Network Time Protocol server.

May also be shown as 4000002100000000 or 0x4000002100000000

Severity: Info

Alert Category: none

Serviceable: No

CIM Information: **Prefix:** IMM and **ID:** 0033

SNMP Trap ID:

Automatically notify Support: No

User response: Information only; no action is required.

40000022-00000000 SSL data in the Management Controller [arg1] configuration data is invalid. Clearing configuration data region and disabling SSL.

Explanation: There is a problem with the certificate that has been imported into the IMM. The imported certificate must contain a public key that corresponds to the key pair that was previously generated through the "Generate a New Key and Certificate Signing Request " link.

May also be shown as 4000002200000000 or 0x4000002200000000

Severity: Error

Alert Category: System - other

Serviceable: No

CIM Information: **Prefix:** IMM and **ID:** 0034

SNMP Trap ID: 22

Automatically notify Support: No

User response: Complete the following steps until the problem is solved:

1. Make sure that the certificate that you are importing is correct.
2. Try to import the certificate again.

40000023-00000000 Flash of [arg1] from [arg2] succeeded for user [arg3] .

Explanation: The specified firmware update has been completed.

May also be shown as 4000002300000000 or 0x4000002300000000

Severity: Info

Alert Category: none

Serviceable: No

CIM Information: **Prefix:** IMM and **ID:** 0035

SNMP Trap ID:

Automatically notify Support: No

User response: Information only; no action is required.

40000024-00000000 Flash of [arg1] from [arg2] failed for user [arg3].

Explanation: The specified firmware has not been updated.

May also be shown as 4000002400000000 or 0x4000002400000000

Severity: Info

Alert Category: System - other

Serviceable: No

CIM Information: **Prefix:** IMM and **ID:** 0036

SNMP Trap ID: 22

Automatically notify Support: No

User response: Information only; no action is required.

40000025-00000000 The [arg1] on system [arg2] is 75% full.

Explanation: The IMM event log is 75% full. When the event log is completely full, the new entries will overwrite the oldest entries. To avoid losing older log entries, save the log as a text file and clear the log.

May also be shown as 4000002500000000 or 0x4000002500000000

Severity: Info

Alert Category: System - Event Log Fullness

Serviceable: No

CIM Information: **Prefix:** IMM and **ID:** 0037

SNMP Trap ID: 35

Automatically notify Support: No

User response: Information only; no action is required.

40000026-00000000 The [arg1] on system [arg2] is 100% full.

Explanation: The IMM event log is full. New entries in the log will overwrite the oldest entries. To avoid losing older log entries, save the log as a text file and clear the log.

May also be shown as 4000002600000000 or 0x4000002600000000

Severity: Info

Alert Category: System - Event Log Fullness

Serviceable: No

CIM Information: **Prefix:** IMM and **ID:** 0038

SNMP Trap ID: 35

Automatically notify Support: No

User response: To avoid losing older log entries, save the log as a text file and clear the log.

40000027-00000000 Platform Watchdog Timer expired for [arg1].

Explanation: A "Platform Watchdog Timer Expired" event has occurred.

May also be shown as 4000002700000000 or 0x4000002700000000

Severity: Error

Alert Category: System - OS Timeout

Serviceable: No

CIM Information: **Prefix:** IMM and **ID:** 0039

SNMP Trap ID: 21

Automatically notify Support: No

User response: Complete the following steps until the problem is solved:

1. Reconfigure the watchdog timer to a higher value.
2. Make sure that the IMM Ethernet-over-USB interface is enabled.
3. Reinstall the RNDIS or cdc_ether device driver for the operating system.
4. Disable the watchdog.
5. Check the integrity of the installed operating system.

40000028-00000000 Management Controller Test Alert Generated by [arg1].

Explanation: The Integrated Management Module has sent a test message to help verify connectivity.

May also be shown as 4000002800000000 or 0x4000002800000000

Severity: Info

Alert Category: System - other

Serviceable: No

CIM Information: **Prefix:** IMM and **ID:** 0040

SNMP Trap ID: 22

Automatically notify Support: No

User response: Information only; no action is required.

40000029-00000000 Security: Userid: [arg1] had [arg2] login failures from an SSH client at IP address [arg3].

Explanation: A user has exceeded the maximum allowed number of unsuccessful login attempts from SSH and has been prevented from logging in for the lockout period.

May also be shown as 4000002900000000 or 0x4000002900000000

Severity: Info

Alert Category: System - Remote Login

Serviceable: No

CIM Information: **Prefix:** IMM and **ID:** 0041

SNMP Trap ID: 30

Automatically notify Support: No

User response: Complete the following steps until the problem is solved:

1. Make sure that the correct login ID and password are being used.
2. Have the system administrator reset the login ID or password.

4000002a-00000000 [arg1] firmware mismatch internal to system [arg2]. Please attempt to flash the [arg3] firmware.

Explanation: A specific type of firmware mismatch has been detected.

May also be shown as 4000002a00000000 or 0x4000002a00000000

Severity: Error

Alert Category: System - Other

Serviceable: No

CIM Information: **Prefix:** IMM and **ID:** 0042

SNMP Trap ID: 22

Automatically notify Support: No

User response: Reflash the IMM firmware to the latest version.

4000002b-00000000 Domain name set to [arg1].

Explanation: Domain name set by user

May also be shown as 4000002b00000000 or 0x4000002b00000000

Severity: Info

Alert Category: none

Serviceable: No

CIM Information: **Prefix:** IMM and **ID:** 0043

SNMP Trap ID:

Automatically notify Support: No

User response: Information only; no action is required.

4000002c-00000000 Domain Source changed to [arg1] by user [arg2].

Explanation: Domain source changed by user

May also be shown as 4000002c00000000 or 0x4000002c00000000

Severity: Info

Alert Category: none

Serviceable: No

CIM Information: **Prefix:** IMM and **ID:** 0044

SNMP Trap ID:

Automatically notify Support: No

User response: Information only; no action is required.

4000002d-00000000 DDNS setting changed to [arg1] by user [arg2].

Explanation: DDNS setting changed by user

May also be shown as 4000002d00000000 or 0x4000002d00000000

Severity: Info

Alert Category: none

Serviceable: No

CIM Information: **Prefix:** IMM and **ID:** 0045

SNMP Trap ID:

Automatically notify Support: No

User response: Information only; no action is required.

4000002e-00000000 DDNS registration successful. The domain name is [arg1].

Explanation: The DDNS registration was successful.

May also be shown as 4000002e00000000 or 0x4000002e00000000

Severity: Info

Alert Category: none

Serviceable: No

CIM Information: **Prefix:** IMM and **ID:** 0046

SNMP Trap ID:

Automatically notify Support: No

User response: Information only; no action is required.

4000002f-00000000 IPv6 enabled by user [arg1] .

Explanation: The specified user has enabled IPv6 support on the Integrated Management Module.

May also be shown as 4000002f00000000 or 0x4000002f00000000

Severity: Info

Alert Category: none

Serviceable: No

CIM Information: **Prefix:** IMM and **ID:** 0047

SNMP Trap ID:

Automatically notify Support: No

User response: Information only; no action is required.

40000030-00000000 IPv6 disabled by user [arg1] .

Explanation: The specified user has disabled IPv6 support on the Integrated Management Module.

May also be shown as 4000003000000000 or 0x4000003000000000

Severity: Info

Alert Category: none

Serviceable: No

CIM Information: **Prefix:** IMM and **ID:** 0048

SNMP Trap ID:

Automatically notify Support: No

User response: Information only; no action is required.

40000031-00000000 IPv6 static IP configuration enabled by user [arg1].

Explanation: The specified user has enabled IPv6 static address assignment on the Integrated Management Module.

May also be shown as 4000003100000000 or 0x4000003100000000

Severity: Info

Alert Category: none

Serviceable: No

CIM Information: **Prefix:** IMM and **ID:** 0049

SNMP Trap ID:

Automatically notify Support: No

User response: Information only; no action is required.

40000032-00000000 IPv6 DHCP enabled by user [arg1].

Explanation: The specified user has enabled DHCPv6 on the Integrated Management Module.

May also be shown as 4000003200000000 or 0x4000003200000000

Severity: Info

Alert Category: none

Serviceable: No

CIM Information: **Prefix:** IMM and **ID:** 0050

SNMP Trap ID:

Automatically notify Support: No

User response: Information only; no action is required.

40000033-00000000 IPv6 stateless auto-configuration enabled by user [arg1].

Explanation: IPv6 stateless address auto-configuration has been enabled on the Integrated Management Module by the specified user.

May also be shown as 4000003300000000 or 0x4000003300000000

Severity: Info

Alert Category: none

Serviceable: No

CIM Information: **Prefix:** IMM and **ID:** 0051

SNMP Trap ID:

Automatically notify Support: No

User response: Information only; no action is required.

40000034-00000000 IPv6 static IP configuration disabled by user [arg1].

Explanation: The specified user has disabled IPv6 static address assignment on the Integrated Management Module.

May also be shown as 4000003400000000 or 0x4000003400000000

Severity: Info

Alert Category: none

Serviceable: No

CIM Information: **Prefix:** IMM and **ID:** 0052

SNMP Trap ID:

Automatically notify Support: No

User response: Information only; no action is required.

40000035-00000000 IPv6 DHCP disabled by user [arg1].

Explanation: The specified user has disabled DHCPv6 on the Integrated Management Module.

May also be shown as 4000003500000000 or 0x4000003500000000

Severity: Info

Alert Category: none

Serviceable: No

CIM Information: **Prefix:** IMM and **ID:** 0053

SNMP Trap ID:

Automatically notify Support: No

User response: Information only; no action is required.

40000036-00000000 IPv6 stateless auto-configuration disabled by user [arg1].

Explanation: IPv6 stateless address auto-configuration has been disabled on the Integrated Management Module by the specified user.

May also be shown as 4000003600000000 or 0x4000003600000000

Severity: Info

Alert Category: none

Serviceable: No

CIM Information: **Prefix:** IMM and **ID:** 0054

SNMP Trap ID:

Automatically notify Support: No

User response: Information only; no action is required.

40000037-00000000 ENET[[arg1]] IPv6-LinkLocal:HstName=[arg2], IP@=[arg3], Pref=[arg4] .

Explanation: The IPv6 link-local address is active.

May also be shown as 4000003700000000 or 0x4000003700000000

Severity: Info

Alert Category: none

Serviceable: No

CIM Information: **Prefix:** IMM and **ID:** 0055

SNMP Trap ID:

Automatically notify Support: No

User response: Information only; no action is required.

40000038-00000000 ENET[[arg1]] IPv6-Static:HstName=[arg2], IP@=[arg3], Pref=[arg4], GW@=[arg5].

Explanation: The IPv6 static address is active.

May also be shown as 4000003800000000 or 0x4000003800000000

Severity: Info

Alert Category: none

Serviceable: No

CIM Information: **Prefix:** IMM and **ID:** 0056

SNMP Trap ID:

Automatically notify Support: No

User response: Information only; no action is required.

40000039-00000000 ENET[[arg1]] DHCPv6-HSTN=[arg2], DN=[arg3], IP@=[arg4], Pref=[arg5].

Explanation: The IPv6 DHCP-assigned address is active.

May also be shown as 4000003900000000 or 0x4000003900000000

Severity: Info

Alert Category: none

Serviceable: No

CIM Information: **Prefix:** IMM and **ID:** 0057

SNMP Trap ID:

Automatically notify Support: No

User response: Information only; no action is required.

4000003a-00000000 IPv6 static address of network interface modified from [arg1] to [arg2] by user [arg3].

Explanation: A user modifies the IPv6 static address of a Management Controller

May also be shown as 4000003a00000000 or 0x4000003a00000000

Severity: Info

Alert Category: none

Serviceable: No

CIM Information: **Prefix:** IMM and **ID:** 0058

SNMP Trap ID:

Automatically notify Support: No

User response: Information only; no action is required.

4000003b-00000000 DHCPv6 failure, no IP address assigned.

Explanation: The DHCPv6 server has failed to assign an IP address to a management controller.

May also be shown as 4000003b00000000 or 0x4000003b00000000

Severity: Warning

Alert Category: none

Serviceable: No

CIM Information: **Prefix:** IMM and **ID:** 0059

SNMP Trap ID:

Automatically notify Support: No

User response: Complete the following steps until the problem is solved:
1. Make sure that the IMM network cable is connected.
2. Make sure that there is a DHCPv6 server on the network that can assign an IP address to the IMM.

4000003c-00000000 Platform Watchdog Timer expired for [arg1].

Explanation: IMM has detected an OS did not start in the expected amount of time.

May also be shown as 4000003c00000000 or 0x4000003c00000000

Severity: Error

Alert Category: System - Loader timeout

Serviceable: No

CIM Information: **Prefix:** IMM and **ID:** 0060

SNMP Trap ID: 26

Automatically notify Support: No

User response:
1. Reconfigure the watchdog timer to a higher value.
2. Make sure that the IMM Ethernet over USB interface is enabled.
3. Reinstall the RNDIS or cdc_ether device driver for the operating system.
4. Disable the watchdog.
5. Check the integrity of the installed operating system

4000003d-00000000 Telnet port number changed from [arg1] to [arg2] by user [arg3].

Explanation: The specified user has changed the Telnet port number.

May also be shown as 4000003d00000000 or 0x4000003d00000000

Severity: Info

Alert Category: none

Serviceable: No

CIM Information: **Prefix:** IMM and **ID:** 0061

SNMP Trap ID:

Automatically notify Support: No

User response: Information only; no action is required.

4000003e-00000000 SSH port number changed from [arg1] to [arg2] by user [arg3].

Explanation: The specified user has changed the Secure Shell (SSH) port number.

May also be shown as 4000003e00000000 or 0x4000003e00000000

Severity: Info

Alert Category: none

Serviceable: No

CIM Information: **Prefix:** IMM and **ID:** 0062

SNMP Trap ID:

Automatically notify Support: No

User response: Information only; no action is required.

4000003f-00000000 Web-HTTP port number changed from [arg1] to [arg2] by user [arg3].

Explanation: The specified user has changed the HTTP port number. New HTTP (web) connections must use the new port number.

May also be shown as 4000003f00000000 or 0x4000003f00000000

Severity: Info

Alert Category: none

Serviceable: No

CIM Information: **Prefix:** IMM and **ID:** 0063

SNMP Trap ID:

Automatically notify Support: No

User response: Information only; no action is required.

40000040-00000000 Web-HTTPS port number changed from [arg1] to [arg2] by user [arg3].

Explanation: The specified user has changed the HTTPS port number. New HTTPS (secure web) connections must use the new port number.

May also be shown as 4000004000000000 or 0x4000004000000000

Severity: Info

Alert Category: none

Serviceable: No

CIM Information: **Prefix:** IMM and **ID:** 0064

SNMP Trap ID:

Automatically notify Support: No

User response: Information only; no action is required.

40000041-00000000 CIM/XML HTTP port number changed from [arg1] to [arg2] by user [arg3].

Explanation: The specified user has changed the CIM HTTP port number.

May also be shown as 4000004100000000 or 0x4000004100000000

Severity: Info

Alert Category: none

Serviceable: No

CIM Information: **Prefix:** IMM and **ID:** 0065

SNMP Trap ID:

Automatically notify Support: No

User response: Information only; no action is required.

40000042-00000000 CIM/XML HTTPS port number changed from [arg1] to [arg2] by user [arg3].

Explanation: The specified user has changed the CIM HTTPS port number.

May also be shown as 4000004200000000 or 0x4000004200000000

Severity: Info

Alert Category: none

Serviceable: No

CIM Information: **Prefix:** IMM and **ID:** 0066

SNMP Trap ID:

Automatically notify Support: No

User response: Information only; no action is required.

40000043-00000000 SNMP Agent port number changed from [arg1] to [arg2] by user [arg3].

Explanation: The specified user has changed the Simple Network Management Protocol (SNMP) agent port number.

May also be shown as 4000004300000000 or 0x4000004300000000

Severity: Info

Alert Category: none

Serviceable: No

CIM Information: **Prefix:** IMM and **ID:** 0067

SNMP Trap ID:

Automatically notify Support: No

User response: Information only; no action is required.

40000044-00000000 SNMP Traps port number changed from [arg1] to [arg2] by user [arg3].

Explanation: The specified user has changed the Simple Network Management Protocol (SNMP) traps port number.

May also be shown as 4000004400000000 or 0x4000004400000000

Severity: Info

Alert Category: none

Serviceable: No

CIM Information: **Prefix:** IMM and **ID:** 0068

SNMP Trap ID:

Automatically notify Support: No

User response: Information only; no action is required.

40000045-00000000 Syslog port number changed from [arg1] to [arg2] by user [arg3].

Explanation: A user has modified the Syslog receiver port number

May also be shown as 4000004500000000 or 0x4000004500000000

Severity: Info

Alert Category: none

Serviceable: No

CIM Information: **Prefix:** IMM and **ID:** 0069

SNMP Trap ID:

Automatically notify Support: No

User response: Information only; no action is required.

40000046-00000000 Remote Presence port number changed from [arg1] to [arg2] by user [arg3].

Explanation: A user has modified the Remote Presence port number

May also be shown as 4000004600000000 or 0x4000004600000000

Severity: Info

Alert Category: none

Serviceable: No

CIM Information: **Prefix:** IMM and **ID:** 0070

SNMP Trap ID:

Automatically notify Support: No

User response: Information only; no action is required.

40000047-00000000 LED [arg1] state changed to [arg2] by [arg3].

Explanation: The specified LED has changed state.

May also be shown as 4000004700000000 or 0x4000004700000000

Severity: Info

Alert Category: none

Serviceable: No

CIM Information: **Prefix:** IMM and **ID:** 0071

SNMP Trap ID:

Automatically notify Support: No

User response: Information only; no action is required.

40000048-00000000 Inventory data changed for device [arg1], new device data hash=[arg2], new master data hash=[arg3] .

Explanation: Something has caused the physical inventory to change

May also be shown as 4000004800000000 or 0x4000004800000000

Severity: Info

Alert Category: none

Serviceable: No

CIM Information: **Prefix:** IMM and **ID:** 0072

SNMP Trap ID:

Automatically notify Support: No

User response: Information only; no action is required.

40000049-00000000 SNMP [arg1] enabled by user [arg2] .

Explanation: The specified user has enabled the SNMPv1 or SNMPv3 agent.

May also be shown as 4000004900000000 or 0x4000004900000000

Severity: Info

Alert Category: none

Serviceable: No

CIM Information: **Prefix:** IMM and **ID:** 0073

SNMP Trap ID:

Automatically notify Support: No

User response: Information only; no action is required.

4000004a-00000000 SNMP [arg1] disabled by user [arg2] .

Explanation: The specified user has disabled the SNMPv1 or SNMPv3 agent.

May also be shown as 4000004a00000000 or 0x4000004a00000000

Severity: Info

Alert Category: none

Serviceable: No

CIM Information: **Prefix:** IMM and **ID:** 0074

SNMP Trap ID:

Automatically notify Support: No

User response: Information only; no action is required.

4000004b-00000000 SNMPv1 [arg1] set by user [arg2]: Name=[arg3], AccessType=[arg4], Address=[arg5], .

Explanation: A user changed the SNMP community string

May also be shown as 4000004b00000000 or 0x4000004b00000000

Severity: Info

Alert Category: none

Serviceable: No

CIM Information: **Prefix:** IMM and **ID:** 0075

SNMP Trap ID:

Automatically notify Support: No

User response: Information only; no action is required.

4000004c-00000000 LDAP Server configuration set by user [arg1]: SelectionMethod=[arg2], DomainName=[arg3], Server1=[arg4], Server2=[arg5], Server3=[arg6], Server4=[arg7].

Explanation: A user changed the LDAP server configuration

May also be shown as 4000004c00000000 or 0x4000004c00000000

Severity: Info

Alert Category: none

Serviceable: No

CIM Information: **Prefix:** IMM and **ID:** 0076

SNMP Trap ID:

Automatically notify Support: No

User response: Information only; no action is required.

4000004d-00000000 LDAP set by user [arg1]: RootDN=[arg2], UIDSearchAttribute=[arg3], BindingMethod=[arg4], EnhancedRBS=[arg5], TargetName=[arg6], GroupFilter=[arg7], GroupAttribute=[arg8], LoginAttribute=[arg9].

Explanation: A user configured an LDAP Miscellaneous setting

May also be shown as 4000004d00000000 or 0x4000004d00000000

Severity: Info

Alert Category: none

Serviceable: No

CIM Information: **Prefix:** IMM and **ID:** 0077

SNMP Trap ID:

Automatically notify Support: No

User response: Information only; no action is required.

4000004e-00000000 Serial Redirection set by user [arg1]: Mode=[arg2], BaudRate=[arg3], StopBits=[arg4], Parity=[arg5], SessionTerminateSequence=[arg6].

Explanation: A user configured the Serial Port mode

May also be shown as 4000004e00000000 or 0x4000004e00000000

Severity: Info

Alert Category: none

Serviceable: No

CIM Information: **Prefix:** IMM and **ID:** 0078

SNMP Trap ID:

Automatically notify Support: No

User response: Information only; no action is required.

4000004f-00000000 Date and Time set by user [arg1]: Date=[arg2], Time-[arg3], DST Auto-adjust=[arg4], Timezone=[arg5].

Explanation: The specified user has changed the date and time in the Integrated Management Module.

May also be shown as 4000004f00000000 or 0x4000004f00000000

Severity: Info

Alert Category: none

Serviceable: No

CIM Information: **Prefix:** IMM and **ID:** 0079

SNMP Trap ID:

Automatically notify Support: No

User response: Information only; no action is required.

40000050-00000000 Server General Settings set by user [arg1]: Name=[arg2], Contact=[arg3], Location=[arg4], Room=[arg5], RackID=[arg6], Rack U-position=[arg7].

Explanation: A user configured the Location setting

May also be shown as 4000005000000000 or 0x4000005000000000

Severity: Info

Alert Category: none

Serviceable: No

CIM Information: **Prefix:** IMM and **ID:** 0080

SNMP Trap ID:

Automatically notify Support: No

User response: Information only; no action is required.

40000051-00000000 Server Power Off Delay set to [arg1] by user [arg2].

Explanation: A user configured the Server Power Off Delay

May also be shown as 4000005100000000 or 0x4000005100000000

Severity: Info

Alert Category: none

Serviceable: No

CIM Information: **Prefix:** IMM and **ID:** 0081

SNMP Trap ID:

Automatically notify Support: No

User response: Information only; no action is required.

40000052-00000000 Server [arg1] scheduled for [arg2] at [arg3] by user [arg4].

Explanation: A user configured a Server Power action at a specific time

May also be shown as 4000005200000000 or 0x4000005200000000

Severity: Info

Alert Category: none

Serviceable: No

CIM Information: **Prefix:** IMM and **ID:** 0082

SNMP Trap ID:

Automatically notify Support: No

User response: Information only; no action is required.

40000053-00000000 Server [arg1] scheduled for every [arg2] at [arg3] by user [arg4].

Explanation: A user configured a recurring Server Power Action

May also be shown as 4000005300000000 or 0x4000005300000000

Severity: Info

Alert Category: none

Serviceable: No

CIM Information: **Prefix:** IMM and **ID:** 0083

SNMP Trap ID:

Automatically notify Support: No

User response: Information only; no action is required.

40000054-00000000 Server [arg1] [arg2] cleared by user [arg3].

Explanation: A user cleared a Server Power Action.

May also be shown as 4000005400000000 or 0x4000005400000000

Severity: Info

Alert Category: none

Serviceable: No

CIM Information: **Prefix:** IMM and **ID:** 0084

SNMP Trap ID:

Automatically notify Support: No

User response: Information only; no action is required.

40000055-00000000 Synchronize time setting by user [arg1]: Mode=[arg2], NTPServerHost=[arg3]:[arg4],NTPUpdateFrequency=[arg5].

Explanation: A user configured the Date and Time synchronize settings

May also be shown as 4000005500000000 or 0x4000005500000000

Severity: Info

Alert Category: none

Serviceable: No

CIM Information: **Prefix:** IMM and **ID:** 0085

SNMP Trap ID:

Automatically notify Support: No

User response: Information only; no action is required.

40000056-00000000 SMTP Server set by user [arg1] to [arg2]:[arg3].

Explanation: A user configured the SMTP server

May also be shown as 4000005600000000 or 0x4000005600000000

Severity: Info

Alert Category: none

Serviceable: No

CIM Information: **Prefix:** IMM and **ID:** 0086

SNMP Trap ID:

Automatically notify Support: No

User response: Information only; no action is required.

40000057-00000000 Telnet [arg1] by user [arg2].

Explanation: The specified user has enabled or disabled Telnet.

May also be shown as 4000005700000000 or 0x4000005700000000

Severity: Info

Alert Category: none

Serviceable: No

CIM Information: **Prefix:** IMM and **ID:** 0087

SNMP Trap ID:

Automatically notify Support: No

User response: Information only; no action is required.

40000058-00000000 DNS servers set by user [arg1]: UseAdditionalServers=[arg2], PreferredDNStype=[arg3], IPv4Server1=[arg4], IPv4Server2=[arg5], IPv4Server3=[arg6], IPv6Server1=[arg7], IPv6Server2=[arg8], IPv6Server3=[arg9].

Explanation: The specified user has configured the DNS servers.

May also be shown as 4000005800000000 or 0x4000005800000000

Severity: Info

Alert Category: none

Serviceable: No

CIM Information: **Prefix:** IMM and **ID:** 0088

SNMP Trap ID:

Automatically notify Support: No

User response: Information only; no action is required.

40000059-00000000 LAN over USB [arg1] by user [arg2].

Explanation: A user configured USB-LAN

May also be shown as 4000005900000000 or 0x4000005900000000

Severity: Info

Alert Category: none

Serviceable: No

CIM Information: **Prefix:** IMM and **ID:** 0089

SNMP Trap ID:

Automatically notify Support: No

User response: Information only; no action is required.

4000005a-00000000 LAN over USB Port Forwarding set by user [arg1]: ExternalPort=[arg2], USB-LAN port=[arg3].

Explanation: A user configured USB-LAN port forwarding

May also be shown as 4000005a00000000 or 0x4000005a00000000

Severity: Info

Alert Category: none

Serviceable: No

CIM Information: **Prefix:** IMM and **ID:** 0090

SNMP Trap ID:

Automatically notify Support: No

User response: Information only; no action is required.

4000005b-00000000 Secure Web services (HTTPS) [arg1] by user [arg2].

Explanation: A user enables or disables Secure web services

May also be shown as 4000005b00000000 or 0x4000005b00000000

Severity: Info

Alert Category: none

Serviceable: No

CIM Information: **Prefix:** IMM and **ID:** 0091

SNMP Trap ID:

Automatically notify Support: No

User response: Information only; no action is required.

4000005c-00000000 Secure CIM/XML(HTTPS) [arg1] by user [arg2].

Explanation: The secure CIM-XML port has been enabled or disabled.

May also be shown as 4000005c00000000 or 0x4000005c00000000

Severity: Info

Alert Category: none

Serviceable: No

CIM Information: **Prefix:** IMM and **ID:** 0092

SNMP Trap ID:

Automatically notify Support: No

User response: Information only; no action is required.

4000005d-00000000 Secure LDAP [arg1] by user [arg2].

Explanation: A user enables or disables Secure LDAP services

May also be shown as 4000005d00000000 or 0x4000005d00000000

Severity: Info

Alert Category: none

Serviceable: No

CIM Information: **Prefix:** IMM and **ID:** 0093

SNMP Trap ID:

Automatically notify Support: No

User response: Information only; no action is required.

4000005e-00000000 SSH [arg1] by user [arg2].

Explanation: The specified user has enabled or disabled the Secure Shell (SSH) service.

May also be shown as 4000005e00000000 or 0x4000005e00000000

Severity: Info

Alert Category: none

Serviceable: No

CIM Information: **Prefix:** IMM and **ID:** 0094

SNMP Trap ID:

Automatically notify Support: No

User response: Information only; no action is required.

4000005f-00000000 Server timeouts set by user [arg1]: EnableOSWatchdog=[arg2], OSWatchdogTimout=[arg3], EnableLoaderWatchdog=[arg4], LoaderTimeout=[arg5].

Explanation: A user configures Server Timeouts

May also be shown as 4000005f00000000 or 0x4000005f00000000

Severity: Info

Alert Category: none

Serviceable: No

CIM Information: **Prefix:** IMM and **ID:** 0095

SNMP Trap ID:

Automatically notify Support: No

User response: Information only; no action is required.

40000060-00000000 License key for [arg1] added by user [arg2].

Explanation: A Integrated Management Module license that allows access to the specified feature was added to the system.

May also be shown as 4000006000000000 or 0x4000006000000000

Severity: Info

Alert Category: none

Serviceable: No

CIM Information: **Prefix:** IMM and **ID:** 0096

SNMP Trap ID:

Automatically notify Support: No

User response: Information only; no action is required.

40000061-00000000 License key for [arg1] removed by user [arg2].

Explanation: The specified user has removed an Integrated Management Module license. Access to the specified feature is no longer allowed.

May also be shown as 4000006100000000 or 0x4000006100000000

Severity: Info

Alert Category: none

Serviceable: No

CIM Information: **Prefix:** IMM and **ID:** 0097

SNMP Trap ID:

Automatically notify Support: No

User response: Information only; no action is required.

40000062-00000000 Global Login General Settings set by user [arg1]: AuthenticationMethod=[arg2], LockoutPeriod=[arg3], SessionTimeout=[arg4].

Explanation: A user changes the Global Login General Settings

May also be shown as 4000006200000000 or 0x4000006200000000

Severity: Info

Alert Category: none

Serviceable: No

CIM Information: **Prefix:** IMM and **ID:** 0098

SNMP Trap ID:

Automatically notify Support: No

User response: Information only; no action is required.

40000063-00000000 Global Login Account Security set by user [arg1]: PasswordRequired=[arg2], PasswordExpirationPeriod=[arg3], MinimumPasswordReuseCycle=[arg4], MinimumPasswordLength=[arg5], MinimumPasswordChangeInterval=[arg6], MaxmumLoginFailures=[arg7], LockoutAfterMaxFailures=[arg8], MinimumDifferentCharacters=[arg9], DefaultIDExpired=[arg10], ChangePasswordFirstAccess=[arg11].

Explanation: A user changes the Global Login Account Security Settings to Legacy

May also be shown as 4000006300000000 or 0x4000006300000000

Severity: Info

Alert Category: none

Serviceable: No

CIM Information: **Prefix:** IMM and **ID:** 0099

SNMP Trap ID:

Automatically notify Support: No

User response: Information only; no action is required.

40000064-00000000 User [arg1] created.

Explanation: A user account has been created.

May also be shown as 4000006400000000 or 0x4000006400000000

Severity: Info

Alert Category: none

Serviceable: No

CIM Information: **Prefix:** IMM and **ID:** 0100

SNMP Trap ID:

Automatically notify Support: No

User response: Information only; no action is required.

40000065-00000000 User [arg1] removed.

Explanation: A user account has been removed.

May also be shown as 4000006500000000 or 0x4000006500000000

Severity: Info

Alert Category: none

Serviceable: No

CIM Information: **Prefix:** IMM and **ID:** 0101

SNMP Trap ID:

Automatically notify Support: No

User response: Information only; no action is required.

40000066-00000000 User [arg1] password modified.

Explanation: The password for the specified user account has been changed.

May also be shown as 4000006600000000 or 0x4000006600000000

Severity: Info

Alert Category: none

Serviceable: No

CIM Information: **Prefix:** IMM and **ID:** 0102

SNMP Trap ID:

Automatically notify Support: No

User response: Information only; no action is required.

40000067-00000000 User [arg1] role set to [arg2].

Explanation: A user account role assigned

May also be shown as 4000006700000000 or 0x4000006700000000

Severity: Info

Alert Category: none

Serviceable: No

CIM Information: **Prefix:** IMM and **ID:** 0103

SNMP Trap ID:

Automatically notify Support: No

User response: Information only; no action is required.

40000068-00000000 User [arg1] custom privileges set: [arg2].

Explanation: User account priveleges assigned

May also be shown as 4000006800000000 or 0x4000006800000000

Severity: Info

Alert Category: none

Serviceable: No

CIM Information: **Prefix:** IMM and **ID:** 0104

SNMP Trap ID:

Automatically notify Support: No

User response: Information only; no action is required.

40000069-00000000 User [arg1] for SNMPv3 set: AuthenticationProtocol=[arg2], PrivacyProtocol=[arg3], AccessType=[arg4], HostforTraps=[arg5].

Explanation: User account SNMPv3 settings changed

May also be shown as 4000006900000000 or 0x4000006900000000

Severity: Info

Alert Category: none

Serviceable: No

CIM Information: **Prefix:** IMM and **ID:** 0105

SNMP Trap ID:

Automatically notify Support: No

User response: Information only; no action is required.

4000006a-00000000 SSH Client key added for user [arg1].

Explanation: User locally defined an SSH Client key

May also be shown as 4000006a00000000 or 0x4000006a00000000

Severity: Info

Alert Category: none

Serviceable: No

CIM Information: **Prefix:** IMM and **ID:** 0106

SNMP Trap ID:

Automatically notify Support: No

User response: Information only; no action is required.

4000006b-00000000 SSH Client key imported for user [arg1] from [arg2].

Explanation: User imported an SSH Client key

May also be shown as 4000006b00000000 or 0x4000006b00000000

Severity: Info

Alert Category: none

Serviceable: No

CIM Information: **Prefix:** IMM and **ID:** 0107

SNMP Trap ID:

Automatically notify Support: No

User response: Information only; no action is required.

4000006c-00000000 SSH Client key removed from user [arg1].

Explanation: User removed an SSH Client key

May also be shown as 4000006c00000000 or 0x4000006c00000000

Severity: Info

Alert Category: none

Serviceable: No

CIM Information: **Prefix:** IMM and **ID:** 0108

SNMP Trap ID:

Automatically notify Support: No

User response: Information only; no action is required.

4000006d-00000000 Management Controller [arg1]: Configuration saved to a file by user [arg2].

Explanation: A user saves a Management Controller configuration to a file.

May also be shown as 4000006d00000000 or 0x4000006d00000000

Severity: Info

Alert Category: none

Serviceable: No

CIM Information: **Prefix:** IMM and **ID:** 0109

SNMP Trap ID:

Automatically notify Support: No

User response: Information only; no action is required.

4000006e-00000000 Alert Configuration Global Event Notification set by user [arg1]: RetryLimit=[arg2], RetryInterval=[arg3], EntryInterval=[arg4].

Explanation: A user changes the Global Event Notification settings.

May also be shown as 4000006e00000000 or 0x4000006e00000000

Severity: Info

Alert Category: none

Serviceable: No

CIM Information: **Prefix:** IMM and **ID:** 0110

SNMP Trap ID:

Automatically notify Support: No

User response: Information only; no action is required.

4000006f-00000000 Alert Recipient Number [arg1] updated: Name=[arg2], DeliveryMethod=[arg3], Address=[arg4], IncludeLog=[arg5], Enabled=[arg6], EnabledAlerts=[arg7], AllowedFilters=[arg8].

Explanation: The specified user has changed or reset the remote alert recipient configuration.

May also be shown as 4000006f00000000 or 0x4000006f00000000

Severity: Info

Alert Category: none

Serviceable: No

CIM Information: **Prefix:** IMM and **ID:** 0111

SNMP Trap ID:

Automatically notify Support: No

User response: Information only; no action is required.

40000070-00000000 SNMP Traps enabled by user [arg1]: EnabledAlerts=[arg2], AllowedFilters=[arg3] .

Explanation: The specified user has enabled Simple Network Management Protocol (SNMP) traps.

May also be shown as 4000007000000000 or 0x4000007000000000

Severity: Info

Alert Category: none

Serviceable: No

CIM Information: **Prefix:** IMM and **ID:** 0112

SNMP Trap ID:

Automatically notify Support: No

User response: Information only; no action is required.

40000071-00000000 The power cap value changed from [arg1] watts to [arg2] watts by user [arg3].

Explanation: The power capping level has been changed.

May also be shown as 4000007100000000 or 0x4000007100000000

Severity: Info

Alert Category: none

Serviceable: No

CIM Information: **Prefix:** IMM and **ID:** 0113

SNMP Trap ID:

Automatically notify Support: No

User response: Information only; no action is required

40000072-00000000 The minimum power cap value changed from [arg1] watts to [arg2] watts.

Explanation: The minimum power cap value has been changed.

May also be shown as 4000007200000000 or 0x4000007200000000

Severity: Info

Alert Category: none

Serviceable: No

CIM Information: **Prefix:** IMM and **ID:** 0114

SNMP Trap ID:

Automatically notify Support: No

User response: Information only; no action is required.

40000073-00000000 The maximum power cap value changed from [arg1] watts to [arg2] watts.

Explanation: The maximum power cap value has been changed.

May also be shown as 4000007300000000 or 0x4000007300000000

Severity: Info

Alert Category: none

Serviceable: No

CIM Information: **Prefix:** IMM and **ID:** 0115

SNMP Trap ID:

Automatically notify Support: No

User response: Information only; no action is required.

40000074-00000000 The soft minimum power cap value changed from [arg1] watts to [arg2] watts.

Explanation: The soft minimum power cap value has been changed.

May also be shown as 4000007400000000 or 0x4000007400000000

Severity: Info

Alert Category: none

Serviceable: No

CIM Information: **Prefix:** IMM and **ID:** 0116

SNMP Trap ID:

Automatically notify Support: No

User response: Information only; no action is required.

40000075-00000000 The measured power value exceeded the power cap value.

Explanation: The measured power value has exceeded the power cap value.

May also be shown as 4000007500000000 or 0x4000007500000000

Severity: Warning

Alert Category: Warning - Power

Serviceable: No

CIM Information: **Prefix:** IMM and **ID:** 0117

SNMP Trap ID: 164

Automatically notify Support: No

User response:

- Make sure IMM firmware is at the latest level.
- Raise the system power cap value or adjust the system workload to be less than the currently applied power cap.

40000076-00000000 The new minimum power cap value exceeded the power cap value.

Explanation: The new minimum power cap value has exceeded the power cap value.

May also be shown as 4000007600000000 or 0x4000007600000000

Severity: Warning

Alert Category: Warning - Power

Serviceable: No

CIM Information: **Prefix:** IMM and **ID:** 0118

SNMP Trap ID: 164

Automatically notify Support: No

User response: User may need to adjust the power cap value to be greater or equal to the minimum power cap.

40000077-00000000 Power capping was activated by user [arg1].

Explanation: The power capping control has been enabled.

May also be shown as 4000007700000000 or 0x4000007700000000

Severity: Info

Alert Category: none

Serviceable: No

CIM Information: **Prefix:** IMM and **ID:** 0119

SNMP Trap ID:

Automatically notify Support: No

User response: Information only; no action is required.

40000078-00000000 Power capping was deactivated by user [arg1].

Explanation: The power capping control has been enabled.

May also be shown as 4000007800000000 or 0x4000007800000000

Severity: Info

Alert Category: none

Serviceable: No

CIM Information: **Prefix:** IMM and **ID:** 0120

SNMP Trap ID:

Automatically notify Support: No

User response: Information only; no action is required.

40000079-00000000 Static Power Savings mode has been turned on by user [arg1].

Explanation: Static Power Savings mode turned on by user

May also be shown as 4000007900000000 or 0x4000007900000000

Severity: Info

Alert Category: none

Serviceable: No

CIM Information: **Prefix:** IMM and **ID:** 0121

SNMP Trap ID:

Automatically notify Support: No

User response: Information only; no action is required.

4000007a-00000000 Static Power Savings mode has been turned off by user [arg1].

Explanation: Static Power Savings mode turned off by user

May also be shown as 4000007a00000000 or 0x4000007a00000000

Severity: Info

Alert Category: none

Serviceable: No

CIM Information: **Prefix:** IMM and **ID:** 0122

SNMP Trap ID:

Automatically notify Support: No

User response: Information only; no action is required.

4000007b-00000000 Dynamic Power Savings mode has been turned on by user [arg1].

Explanation: Dynamic Power Savings mode turned on by user

May also be shown as 4000007b00000000 or 0x4000007b00000000

Severity: Info

Alert Category: none

Serviceable: No

CIM Information: **Prefix:** IMM and **ID:** 0123

SNMP Trap ID:

Automatically notify Support: No

User response: Information only; no action is required.

4000007c-00000000 Dynamic Power Savings mode has been turned off by user [arg1].

Explanation: Dynamic Power Savings mode turned off by user

May also be shown as 4000007c00000000 or 0x4000007c00000000

Severity: Info

Alert Category: none

Serviceable: No

CIM Information: **Prefix:** IMM and **ID:** 0124

SNMP Trap ID:

Automatically notify Support: No

User response: Information only; no action is required.

4000007d-00000000 Power cap and external throttling occurred.

Explanation: Power cap and external throttling has occurred.

May also be shown as 4000007d00000000 or 0x4000007d00000000

Severity: Info

Alert Category: none

Serviceable: No

CIM Information: **Prefix:** IMM and **ID:** 0125

SNMP Trap ID:

Automatically notify Support: No

User response: Information only; no action is required.

4000007e-00000000 External throttling occurred .

Explanation: External throttling has occurred.

May also be shown as 4000007e00000000 or 0x4000007e00000000

Severity: Info

Alert Category: none

Serviceable: No

CIM Information: **Prefix:** IMM and **ID:** 0126

SNMP Trap ID:

Automatically notify Support: No

User response: Information only; no action is required.

4000007f-00000000 Power cap throttling occurred.

Explanation: Power cap throttling has occurrred.

May also be shown as 4000007f00000000 or 0x4000007f00000000

Severity: Info

Alert Category: none

Serviceable: No

CIM Information: **Prefix:** IMM and **ID:** 0127

SNMP Trap ID:

Automatically notify Support: No

User response: Information only; no action is required.

40000080-00000000 Remote Control session started by user [arg1] in [arg2] mode.

Explanation: Remote Control session started

May also be shown as 4000008000000000 or 0x4000008000000000

Severity: Info

Alert Category: none

Serviceable: No

CIM Information: **Prefix:** IMM and **ID:** 0128

SNMP Trap ID:

Automatically notify Support: No

User response: Information only; no action is required.

40000082-00000000 The measured power value has returned below the power cap value.

Explanation: The measured power value has returned below the power cap value. cap value.

May also be shown as 4000008200000000 or 0x4000008200000000

Severity: Info

Alert Category: Warning - Power

Serviceable: No

CIM Information: **Prefix:** IMM and **ID:** 0130

SNMP Trap ID: 164

Automatically notify Support: No

User response: Information only; no action is required.

40000083-00000000 The new minimum power cap value has returned below the power cap value.

Explanation: The new minimum power cap value has returned below the power cap value. cap value.

May also be shown as 4000008300000000 or 0x4000008300000000

Severity: Info

Alert Category: Warning - Power

Serviceable: No

CIM Information: **Prefix:** IMM and **ID:** 0131

SNMP Trap ID: 164

Automatically notify Support: No

User response: Information only; no action is required.

40000084-00000000 IMM firmware mismatch between nodes [arg1] and [arg2]. Please attempt to flash the IMM firmware to the same level on all nodes.

Explanation: A mismatch of IMM firmware between nodes has been detected.

May also be shown as 4000008400000000 or 0x4000008400000000

Severity: Error

Alert Category: System - Other

Serviceable: No

CIM Information: **Prefix:** IMM and **ID:** 0132

SNMP Trap ID: 22

Automatically notify Support: No

User response: Attempt to flash the IMM firmware to the same level on all nodes.

40000085-00000000 FPGA firmware mismatch between nodes [arg1] and [arg2]. Please attempt to flash the FPGA firmware to the same level on all nodes.

Explanation: A mismatch of FPGA firmware between nodes has been detected.

May also be shown as 4000008500000000 or 0x4000008500000000

Severity: Error

Alert Category: System - Other

Serviceable: No

CIM Information: **Prefix:** IMM and **ID:** 0133

SNMP Trap ID: 22

Automatically notify Support: No

User response: Attempt to flash the FPGA firmware to the same level on all nodes.

40000086-00000000 Test Call Home Generated by user [arg1].

Explanation: The specified user has generated a test automatic support notification.

May also be shown as 4000008600000000 or 0x4000008600000000

Severity: Info

Alert Category: none

Serviceable: No

CIM Information: **Prefix:** IMM and **ID:** 0134

SNMP Trap ID:

Automatically notify Support: Yes

User response: Information only; no action is required.

40000087-00000000 Manual Call Home by user [arg1]: [arg2].

Explanation: The specified user has submitted a service request.

May also be shown as 4000008700000000 or 0x4000008700000000

Severity: Info

Alert Category: none

Serviceable: No

CIM Information: **Prefix:** IMM and **ID:** 0135

SNMP Trap ID:

Automatically notify Support: Yes

User response: IBM Support will address the problem.

40000088-00000000 Management Controller [arg1]: Configuration restoration from a file by user [arg2] completed.

Explanation: The specified user has successfully restored the configuration of the specified management controller from a file.

May also be shown as 4000008800000000 or 0x4000008800000000

Severity: Info

Alert Category: none

Serviceable: No

CIM Information: **Prefix:** IMM and **ID:** 0136

SNMP Trap ID:

Automatically notify Support: No

User response: Information only; no action is required.

40000089-00000000 Management Controller [arg1]: Configuration restoration from a file by user [arg2] failed to complete.

Explanation: Restoration of the configuration of the specified management controller from a file by the specified user has not been completed.

May also be shown as 4000008900000000 or 0x4000008900000000

Severity: Info

Alert Category: System - Other

Serviceable: No

CIM Information: **Prefix:** IMM and **ID:** 0137

SNMP Trap ID: 22

Automatically notify Support: No

User response:

1. Turn off the server and disconnect it from the power source. You must disconnect the server from ac power to reset the IMM.
2. After 45 seconds, reconnect the server to the power source and turn on the server.

3. Retry the operation

4000008a-00000000 Management Controller [arg1]: Configuration restoration from a file by user [arg2] failed to start.

Explanation: Restoration of the configuration of the specified management controller from a file by the specified user has failed to start.

May also be shown as 4000008a00000000 or 0x4000008a00000000

Severity: Info

Alert Category: System - Other

Serviceable: No

CIM Information: **Prefix:** IMM and **ID:** 0138

SNMP Trap ID: 22

Automatically notify Support: No

User response:

1. Turn off the server and disconnect it from the power source. You must disconnect the server from ac power to reset the IMM.
2. After 45 seconds, reconnect the server to the power source and turn on the server.
3. Retry the operation

4000008b-00000000 One or more of the Storage Management IP addresses has changed.

Explanation: This message is for the use case where an IP address for the Storage Management has changed

May also be shown as 4000008b00000000 or 0x4000008b00000000

Severity: Info

Alert Category: System - IMM Network event

Serviceable: No

CIM Information: **Prefix:** IMM and **ID:** 0139

SNMP Trap ID: 37

Automatically notify Support: No

User response: Information only; no action is required.

80010202-0701ffff Numeric sensor [NumericSensorElementName] going low (lower critical) has asserted.

Explanation: A voltage has dropped below its specified threshold.

May also be shown as 800102020701ffff or 0x800102020701ffff

Severity: Error

Alert Category: Critical - Voltage

Serviceable: Yes

CIM Information: **Prefix:** PLAT and **ID:** 0480

SNMP Trap ID: 1

Automatically notify Support: Yes

User response: Use one of the following procedures:

- If the specified sensor is Planar 3.3V or Planar 5V, replace the system board.
- If the specified sensor is Planar 12V, check the Chassis Management Module or Flex System Manager event log for power-supply-related issues, and resolve those issues. If the problem remains, replace the system board.

80010202-2801ffff Sensor Planar VBAT has detected low battery voltage.

Explanation: The CMOS battery voltage has dropped below its specified threshold.

May also be shown as 800102022801ffff or 0x800102022801ffff

Severity: Error

Alert Category: Critical - Voltage

Serviceable: Yes

CIM Information: **Prefix:** PLAT and **ID:** 0480

SNMP Trap ID: 1

Automatically notify Support: No

User response: Replace the CMOS battery.

80010902-0701ffff Sensor [NumericSensorElementName] has detected high voltage.

Explanation: A voltage has exceeded its specified threshold.

May also be shown as 800109020701ffff or 0x800109020701ffff

Severity: Error

Alert Category: Critical - Voltage

Serviceable: Yes

CIM Information: **Prefix:** PLAT and **ID:** 0494

SNMP Trap ID: 1

Automatically notify Support: Yes

User response: Use one of the following procedures:

- If the specified sensor is Planar 3.3V or Planar 5V, replace the system board.
- If the specified sensor is Planar 12V, check the Chassis Management Module or Flex System Manager event log for power-supply-related issues, and resolve those issues. If the problem remains, replace the system board.

80010b01-3701ffff Numeric sensor Inlet 1 Temp going high (upper non-recoverable) has asserted. has asserted.

Explanation: The inlet temperature has exceeded its specified threshold. The compute node has initiated a hard shutdown.

May also be shown as 80010b013701ffff or 0x80010b013701ffff

Severity: Error

Alert Category: Critical - Temperature

Serviceable: Yes

CIM Information: **Prefix:** PLAT and **ID:** 0498

SNMP Trap ID: 0

Automatically notify Support: No

User response: Complete the following steps until the problem is solved:

1. Check the Chassis Management Module or Flex System Manager event log for any fan- or cooling-related issues.
2. Make sure that the airflow at the front and rear of the chassis is not obstructed and that fillers are in place and correctly installed.
3. Make sure that the room temperature is within operating specifications.

80010b01-3702ffff Numeric sensor Inlet 2 Temp going high (upper non-recoverable) has asserted.

Explanation: The inlet temperature has risen above the specified threshold. The system has initiated a hard shutdown.

May also be shown as 80010b013702ffff or 0x80010b013702ffff

Severity: Error

Alert Category: Critical - Temperature

Serviceable: Yes

CIM Information: **Prefix:** PLAT and **ID:** 0498

SNMP Trap ID: 0

Automatically notify Support: No

User response: Complete the following steps:

1. Check the CMM or FSM event log for any fan or cooling related issues.
2. Make sure that the airflow at the front and rear of the chassis is not obstructed and that fillers are in place and correctly installed.
3. Make sure that the room temperature is within operating specifications.

80030006-2101ffff Sensor Sig Verify Fail has deasserted.

Explanation: The secure UEFI update has been completed.

May also be shown as 800300062101ffff or 0x800300062101ffff

Severity: Info

Alert Category: System - Other

Serviceable: No

CIM Information: **Prefix:** PLAT and **ID:** 0509

SNMP Trap ID:

Automatically notify Support: No

User response: Information only; no action is required.

8003010e-2581ffff Sensor Memory Resized has asserted.

Explanation: This message is for the use case when an implementation has detected a sensor has asserted.

May also be shown as 8003010e2581ffff or 0x8003010e2581ffff

Severity: Info

Alert Category: System - Other

Serviceable: No

CIM Information: **Prefix:** PLAT and **ID:** 0508

SNMP Trap ID:

Automatically notify Support: No

User response: This is a UEFI detected event. The UEFI diagnostic code for this event can be found in the logged IMM message text. Please refer to the UEFI diagnostic code in the "UEFI diagnostic code" section of the Information Center for the appropriate user response.

80070101-0301ffff Sensor CPU 1 Overtemp has transitioned from normal to non-critical state.

Explanation: The microprocessor 1 temperature has risen above its specified threshold.

May also be shown as 800701010301ffff or 0x800701010301ffff

Severity: Warning

Alert Category: Warning - Temperature

Serviceable: Yes

CIM Information: **Prefix:** PLAT and **ID:** 0520

SNMP Trap ID: 12

Automatically notify Support: No

User response: Complete the following steps until the problem is solved:

1. Check the Chassis Management Module or Flex System Manager event log for any fan- or cooling-related issues.
2. Make sure that the airflow at the front and rear of the chassis is not obstructed and that fillers are in place and correctly installed.
3. Make sure that the room temperature is within operating specifications.

80070101-0302ffff Sensor CPU 2 Overtemp has transitioned from normal to non-critical state.

Explanation: The temperature of microprocessor 2 has exceeded its specified threshold.

May also be shown as 800701010302ffff or 0x800701010302ffff

Severity: Warning

Alert Category: Warning - Temperature

Serviceable: Yes

CIM Information: **Prefix:** PLAT and **ID:** 0520

SNMP Trap ID: 12

Automatically notify Support: No

User response: Complete the following steps until the problem is solved:

1. Check the Chassis Management Module or Flex System Manager event log for any fan- or cooling-related issues.
2. Make sure that the airflow at the front and rear of the chassis is not obstructed and that fillers are in place and correctly installed.
3. Make sure that the room temperature is within operating specifications.

80070101-0303ffff Sensor CPU 3 Overtemp transitioned from normal to non-critical state.

Explanation: The temperature of microprocessor 3 has exceeded its specified threshold.

May also be shown as 800701010303ffff or 0x800701010303ffff

Severity: Warning

Alert Category: Warning - Temperature

Serviceable: Yes

CIM Information: **Prefix:** PLAT and **ID:** 0520

SNMP Trap ID: 12

Automatically notify Support: No

User response: Complete the following steps until the problem is solved:

1. Check the Chassis Management Module or Flex System Manager event log for any fan- or cooling-related issues.
2. Make sure that the airflow at the front and rear of the chassis is not obstructed and that fillers are in place and correctly installed.

3. Make sure that the room temperature is within operating specifications.

80070101-0304ffff Sensor CPU 4 Overtemp has transitioned from normal to non-critical state.

Explanation: The temperature of microprocessor 4 has exceeded its specified threshold.

May also be shown as 800701010304ffff or 0x800701010304ffff

Severity: Warning

Alert Category: Warning - Temperature

Serviceable: Yes

CIM Information: **Prefix:** PLAT and **ID:** 0520

SNMP Trap ID: 12

Automatically notify Support: No

User response: Complete the following steps until the problem is solved:

1. Check the Chassis Management Module or Flex System Manager event log for any fan- or cooling-related issues.
2. Make sure that the airflow at the front and rear of the chassis is not obstructed and that fillers are in place and correctly installed.
3. Make sure that the room temperature is within operating specifications.

80070101-2c01ffff Sensor Mezz Exp 1 temp has transitioned from normal to non-critical state.

Explanation: The temperature of the I/O expansion adapter in I/O expansion connector 1 has exceeded its specified threshold.

May also be shown as 800701012c01ffff or 0x800701012c01ffff

Severity: Warning

Alert Category: Warning - Temperature

Serviceable: Yes

CIM Information: **Prefix:** PLAT and **ID:** 0520

SNMP Trap ID: 12

Automatically notify Support: No

User response: Complete the following steps until the problem is solved:

1. Check the Chassis Management Module or Flex System Manager event log for any fan- or cooling-related issues.
2. Make sure that the airflow at the front and rear of the chassis is not obstructed and that fillers are in place and correctly installed.
3. Make sure that the room temperature is within operating specifications.

80070101-2c02ffff Sensor Mezz Exp 2 temp has transitioned from normal to non-critical state.

Explanation: The temperature of the I/O expansion adapter in I/O expansion connector 2 has exceeded its specified threshold.

May also be shown as 800701012c02ffff or 0x800701012c02ffff

Severity: Warning

Alert Category: Warning - Temperature

Serviceable: Yes

CIM Information: **Prefix:** PLAT and **ID:** 0520

SNMP Trap ID: 12

Automatically notify Support: No

User response: Complete the following steps until the problem is solved:

1. Check the Chassis Management Module or Flex System Manager event log for any fan- or cooling-related issues.
2. Make sure that the airflow at the front and rear of the chassis is not obstructed and that fillers are in place and correctly installed.
3. Make sure that the room temperature is within operating specifications.

80070101-2c03ffff Sensor Mezz Exp 3 temp has transitioned from normal to non-critical state.

Explanation: The temperature of the I/O expansion adapter in I/O expansion connector 3 has exceeded its specified threshold.

May also be shown as 800701012c03ffff or 0x800701012c03ffff

Severity: Warning

Alert Category: Warning - Temperature

Serviceable: Yes

CIM Information: **Prefix:** PLAT and **ID:** 0520

SNMP Trap ID: 12

Automatically notify Support: No

User response: Complete the following steps until the problem is solved:

1. Check the Chassis Management Module or Flex System Manager event log for any fan- or cooling-related issues.
2. Make sure that the airflow at the front and rear of the chassis is not obstructed and that fillers are in place and correctly installed.
3. Make sure that the room temperature is within operating specifications.

80070101-2c04ffff Sensor Mezz Exp 4 temp has transitioned from normal to non-critical state.

Explanation: The temperature of the I/O expansion adapter in I/O expansion connector 4 has exceeded its specified threshold.

May also be shown as 800701012c04ffff or 0x800701012c04ffff

Severity: Warning

Alert Category: Warning - Temperature

Serviceable: Yes

CIM Information: **Prefix:** PLAT and **ID:** 0520

SNMP Trap ID: 12

Automatically notify Support: No

User response: Complete the following steps until the problem is solved:

1. Check the Chassis Management Module or Flex System Manager event log for any fan- or cooling-related issues.
2. Make sure that the airflow at the front and rear of the chassis is not obstructed and that fillers are in place and correctly installed.
3. Make sure that the room temperature is within operating specifications.

80070101-2d01ffff Sensor PCH Overtemp has transitioned from normal to non-critical state.

Explanation: The temperature of the Platform Controller Hub (PCH) has exceeded its specified threshold.

May also be shown as 800701012d01ffff or 0x800701012d01ffff

Severity: Warning

Alert Category: Warning - Temperature

Serviceable: Yes

CIM Information: **Prefix:** PLAT and **ID:** 0520

SNMP Trap ID: 12

Automatically notify Support: No

User response: Complete the following steps until the problem is solved:

1. Check the Chassis Management Module or Flex System Manager event log for any fan- or cooling-related issues.
2. Make sure that the airflow at the front and rear of the chassis is not obstructed and that fillers are in place and correctly installed.
3. Make sure that the room temperature is within operating specifications.

80070101-3701ffff Sensor Inlet 1 Overtemp has transitioned from normal to non-critical state.

Explanation: The inlet 1 temperature has exceeded its specified threshold. The compute node has attempted a soft shutdown.

May also be shown as 800701013701ffff or 0x800701013701ffff

Severity: Warning

Alert Category: Warning - Temperature

Serviceable: Yes

CIM Information: **Prefix:** PLAT and **ID:** 0520

SNMP Trap ID: 12

Automatically notify Support: No

User response: Complete the following steps until the problem is solved:

1. Check the Chassis Management Module or Flex System Manager event log for any fan- or cooling-related issues.
2. Make sure that the airflow at the front and rear of the chassis is not obstructed and that fillers are in place and correctly installed.
3. Make sure that the room temperature is within operating specifications.

80070101-3702ffff Sensor Inlet 2 Overtemp has transitioned from normal to non-critical state.

Explanation: The inlet 2 temperature has exceeded its specified threshold. The compute node has attempted a soft shutdown.

May also be shown as 800701013702ffff or 0x800701013702ffff

Severity: Warning

Alert Category: Warning - Temperature

Serviceable: Yes

CIM Information: **Prefix:** PLAT and **ID:** 0520

SNMP Trap ID: 12

Automatically notify Support: No

User response: Complete the following steps until the problem is solved:

1. Check the Chassis Management Module or Flex System Manager event log for any fan- or cooling-related issues.
2. Make sure that the airflow at the front and rear of the chassis is not obstructed and that fillers are in place and correctly installed.
3. Make sure that the room temperature is within operating specifications.

80070114-2201ffff Sensor [SensorElementName] has transitioned from normal to non-critical state.

Explanation: This message is for the use case when an implementation has detected a Sensor transitioned to non-critical from normal.

May also be shown as 800701142201ffff or 0x800701142201ffff

Severity: Warning

Alert Category: Warning - Other

Serviceable: Yes

CIM Information: **Prefix:** PLAT and **ID:** 0520

SNMP Trap ID: 60

Automatically notify Support: No

User response: This is a UEFI detected event. The UEFI diagnostic code for this event can be found in the logged IMM message text. Please refer to the UEFI diagnostic code in the "UEFI diagnostic code" section of the Information Center for the appropriate user response.

80070202-0701ffff Sensor Planar Fault has gone to Critical state from a less severe state.

Explanation: A failure has been detected in the system board.

May also be shown as 800702020701ffff or 0x800702020701ffff

Severity: Error

Alert Category: Critical - Voltage

Serviceable: Yes

CIM Information: **Prefix:** PLAT and **ID:** 0522

SNMP Trap ID: 1

Automatically notify Support: No

User response: Complete the following steps:

1. Remove any recently installed components.
2. Try to power on the compute node.
   - If the compute node successfully powers on, complete the following steps:
     a. Check the ServerProven website to make sure that recently installed components are compatible with the compute node.
     b. Inspect the previously installed components for physical damage.
   - If the compute node does not successfully power on or if this is not the first occurrence of this problem, replace the system board.

8007020f-2201ffff Sensor TXT ACM Module has transitioned to critical from a less severe state.

Explanation: TXT ACM Module report it is above a normal state.

May also be shown as 8007020f2201ffff or 0x8007020f2201ffff

Severity: Error

Alert Category: Critical - Other

Serviceable: Yes

CIM Information: **Prefix:** PLAT and **ID:** 0522

SNMP Trap ID: 50

Automatically notify Support: No

User response: This is a UEFI detected event. The UEFI diagnostic code for this event can be found in the logged

IMM message text. Please refer to the UEFI diagnostic code in the "UEFI diagnostic code" section of the Info Center for the appropriate user response.

8007020f-2582ffff Sensor NO I/O Resources has transitioned to critical from a less severe state.

Explanation: IMM has detected a "No I/O Resources" Sensor has transitioned to critical.

May also be shown as 8007020f2582ffff or 0x8007020f2582ffff

Severity: Error

Alert Category: Critical - Other

Serviceable: Yes

CIM Information: **Prefix:** PLAT and **ID:** 0522

SNMP Trap ID: 50

Automatically notify Support: No

User response: This is a UEFI detected event. The UEFI diagnostic code for this event can be found in the logged IMM message text. Please refer to the UEFI diagnostic code in the "UEFI diagnostic code" section of the Information Center for the appropriate user response.

80070217-2c02ffff Sensor Mezz Exp 2 Fault has transitioned to critical from a less severe state.

Explanation: The I/O expansion adapter in I/O expansion connector 2 has reported a fault.

May also be shown as 800702172c02ffff or 0x800702172c02ffff

Severity: Error

Alert Category: Critical - Other

Serviceable: Yes

CIM Information: **Prefix:** PLAT and **ID:** 0522

SNMP Trap ID: 50

Automatically notify Support: No

User response: Complete the following steps:

1. Remove any recently installed components.
2. Try to power on the chassis.
   - If the chassis successfully powers on, complete the following steps:
     a. Check the ServerProven website to make sure that recently installed components are compatible with the chassis.
     b. Inspect the previously installed components for physical damage.
   - If the chassis does not successfully power on or if this is not the first occurrence of this problem, replace the I/O expansion adapter.

80070217-2c03ffff Sensor Mezz Exp 3 Fault has transitioned to critical from a less severe state.

Explanation: The I/O expansion adapter in I/O expansion connector 3 has reported a fault.

May also be shown as 800702172c03ffff or 0x800702172c03ffff

Severity: Error

Alert Category: Critical - Other

Serviceable: Yes

CIM Information: **Prefix:** PLAT and **ID:** 0522

SNMP Trap ID: 50

Automatically notify Support: No

User response: Complete the following steps:

1. Remove any recently installed components.
2. Try to power on the chassis.
   - If the chassis successfully powers on, complete the following steps:
     a. Check the ServerProven website to make sure that recently installed components are compatible with the chassis.
     b. Inspect the previously installed components for physical damage.
   - If the chassis does not successfully power on or if this is not the first occurrence of this problem, replace the I/O expansion adapter.

8007021b-0301ffff Sensor CPU 1 QPILinkErr has transitioned to critical from a less severe state.

Explanation: CPU 1 QPI Link Failure detected.

May also be shown as 8007021b0301ffff or 0x8007021b0301ffff

Severity: Error

Alert Category: Critical - Other

Serviceable: Yes

CIM Information: **Prefix:** PLAT and **ID:** 0522

SNMP Trap ID: 50

Automatically notify Support: Yes

User response: This is a UEFI detected event. The UEFI diagnostic code for this event can be found in the logged IMM message text. Please refer to the UEFI diagnostic code in the "UEFI diagnostic code" section of the Information Center for the appropriate user response.

8007021b-0302ffff Sensor CPU 2 QPILinkErr has transitioned to critical from a less severe state.

Explanation: CPU 2 QPI Link Failure detected.

May also be shown as 8007021b0302ffff or 0x8007021b0302ffff

Severity: Error

Alert Category: Critical - Other

Serviceable: Yes

CIM Information: **Prefix:** PLAT and **ID:** 0522

SNMP Trap ID: 50

Automatically notify Support: Yes

User response: This is a UEFI detected event. The UEFI diagnostic code for this event can be found in the logged IMM message text. Please refer to the UEFI diagnostic code in the "UEFI diagnostic code" section of the Information Center for the appropriate user response.

8007021b-0303ffff Sensor CPU 3 QPILinkErr has transitioned to critical from a less severe state.

Explanation: CPU 3 QPI Link Failure detected.

May also be shown as 8007021b0303ffff or 0x8007021b0303ffff

Severity: Error

Alert Category: Critical - Other

Serviceable: Yes

CIM Information: **Prefix:** PLAT and **ID:** 0522

SNMP Trap ID: 50

Automatically notify Support: Yes

User response: This is a UEFI detected event. The UEFI diagnostic code for this event can be found in the logged IMM message text. Please refer to the UEFI diagnostic code in the "UEFI diagnostic code" section of the Information Center for the appropriate user response.

8007021b-0304ffff Sensor CPU 4 QPILinkErr has transitioned to critical from a less severe state.

Explanation: CPU 4 QPI Link Failure detected.

May also be shown as 8007021b0304ffff or 0x8007021b0304ffff

Severity: Error

Alert Category: Critical - Other

Serviceable: Yes

CIM Information: **Prefix:** PLAT and **ID:** 0522

SNMP Trap ID: 50

Automatically notify Support: Yes

User response: This is a UEFI detected event. The UEFI diagnostic code for this event can be found in the logged IMM message text. Please refer to the UEFI diagnostic code in the "UEFI diagnostic code" section of the Information Center for the appropriate user response.

80070301-0301ffff Sensor CPU 1 Overtemp has gone to Nonrecoverable state from a less severe state.

Explanation: The microprocessor 1 temperature has risen above its specified threshold, causing a hard shutdown of the node.

May also be shown as 800703010301ffff or 0x800703010301ffff

Severity: Error

Alert Category: Critical - Temperature

Serviceable: Yes

CIM Information: **Prefix:** PLAT and **ID:** 0524

SNMP Trap ID: 0

Automatically notify Support: No

User response: Complete the following steps until the problem is solved:

1. Check the Chassis Management Module or Flex System Manager event log for any fan- or cooling-related issues.
2. Make sure that the airflow at the front and rear of the chassis is not obstructed and that fillers are in place and correctly installed.
3. Make sure that the room temperature is within operating specifications.
4. Make sure that the microprocessor 1 heat sink is securely installed.
5. Make sure that the microprocessor 1 heat sink is installed correctly and the thermal material is correctly applied.
6. Replace microprocessor 1.

80070301-0302ffff Sensor CPU 2 Overtemp has gone to Nonrecoverable state from a less severe state.

Explanation: The temperature of microprocessor 2 has exceeded its specified threshold, causing a hard shutdown of the compute node.

May also be shown as 800703010302ffff or 0x800703010302ffff

Severity: Error

Alert Category: Critical - Temperature

Serviceable: Yes

CIM Information: **Prefix:** PLAT and **ID:** 0524

SNMP Trap ID: 0

Automatically notify Support: No

User response: Complete the following steps until the problem is solved:

1. Check the Chassis Management Module or Flex System Manager event log for any fan- or cooling-related issues.
2. Make sure that the airflow at the front and rear of the chassis is not obstructed and that fillers are in place and correctly installed.
3. Make sure that the room temperature is within operating specifications.
4. Make sure that the microprocessor 2 heat sink is securely installed.
5. Make sure that the microprocessor 2 heat sink is installed correctly and the thermal material is correctly applied.
6. Replace microprocessor 2.

80070301-0303ffff Sensor CPU 3 Overtemp has gone to Nonrecoverable state from a less severe state.

Explanation: The temperature of microprocessor 3 has exceeded its specified threshold, causing a hard shutdown of the compute node.

May also be shown as 800703010303ffff or 0x800703010303ffff

Severity: Error

Alert Category: Critical - Temperature

Serviceable: Yes

CIM Information: **Prefix:** PLAT and **ID:** 0524

SNMP Trap ID: 0

Automatically notify Support: No

User response: Complete the following steps until the problem is solved:

1. Check the Chassis Management Module or Flex System Manager event log for any fan- or cooling-related issues.
2. Make sure that the airflow at the front and rear of the chassis is not obstructed and that fillers are in place and correctly installed.
3. Make sure that the room temperature is within operating specifications.
4. Make sure that the microprocessor 3 heat sink is securely installed.
5. Make sure that the microprocessor 3 heat sink is installed correctly and the thermal material is correctly applied.
6. Replace microprocessor 3.

80070301-0304ffff Sensor CPU 4 Overtemp has gone to Nonrecoverable state from a less severe state.

Explanation: The temperature of microprocessor 4 has exceeded its specified threshold, causing a hard shutdown of the compute node.

May also be shown as 800703010304ffff or 0x800703010304ffff

Severity: Error

Alert Category: Critical - Temperature

Serviceable: Yes

CIM Information: **Prefix:** PLAT and **ID:** 0524

SNMP Trap ID: 0

Automatically notify Support: No

User response: Complete the following steps until the problem is solved:

1. Check the Chassis Management Module or Flex System Manager event log for any fan- or cooling-related issues.
2. Make sure that the airflow at the front and rear of the chassis is not obstructed and that fillers are in place and correctly installed.

3. Make sure that the room temperature is within operating specifications.
4. Make sure that the microprocessor 4 heat sink is securely installed.
5. Make sure that the microprocessor 4 heat sink is installed correctly and the thermal material is correctly applied.
6. Replace microprocessor 4.

80070301-2c01ffff Sensor Mezz Exp 1 temp has transitioned to non-recoverable from a less severe state.

Explanation: The temperature of the I/O expansion adapter in I/O expansion connector 1 has exceeded its specified threshold. The compute node has attempted a soft shutdown.

May also be shown as 800703012c01ffff or 0x800703012c01ffff

Severity: Error

Alert Category: Critical - Temperature

Serviceable: Yes

CIM Information: **Prefix:** PLAT and **ID:** 0524

SNMP Trap ID: 0

Automatically notify Support: No

User response: Complete the following steps until the problem is solved:
1. Check the Chassis Management Module or Flex System Manager event log for any fan- or cooling-related issues.
2. Make sure that the airflow at the front and rear of the chassis is not obstructed and that fillers are in place and correctly installed.
3. Make sure that the room temperature is within operating specifications.
4. If there are no other thermal issues, replace the I/O expansion adapter.

80070301-2c02ffff Sensor Mezz Exp 2 temp has transitioned to non-recoverable from a less severe state.

Explanation: The temperature of the I/O expansion adapter in I/O expansion connector 2 has exceeded its specified threshold. The compute node has attempted a soft shutdown.

May also be shown as 800703012c02ffff or 0x800703012c02ffff

Severity: Error

Alert Category: Critical - Temperature

Serviceable: Yes

CIM Information: **Prefix:** PLAT and **ID:** 0524

SNMP Trap ID: 0

Automatically notify Support: No

User response: Complete the following steps until the problem is solved:
1. Check the Chassis Management Module or Flex System Manager event log for any fan- or cooling-related issues.
2. Make sure that the airflow at the front and rear of the chassis is not obstructed and that fillers are in place and correctly installed.
3. Make sure that the room temperature is within operating specifications.
4. If there are no other thermal issues, replace the I/O expansion adapter.

80070301-2c03ffff Sensor Mezz Exp 3 temp has transitioned to non-recoverable from a less severe state.

Explanation: The temperature of the I/O expansion adapter in I/O expansion connector 3 has exceeded its specified threshold. The compute node has attempted a soft shutdown.

May also be shown as 800703012c03ffff or 0x800703012c03ffff

Severity: Error

Alert Category: Critical - Temperature

Serviceable: Yes

CIM Information: **Prefix:** PLAT and **ID:** 0524

SNMP Trap ID: 0

Automatically notify Support: No

User response: Complete the following steps until the problem is solved:

1. Check the Chassis Management Module or Flex System Manager event log for any fan- or cooling-related issues.
2. Make sure that the airflow at the front and rear of the chassis is not obstructed and that fillers are in place and correctly installed.
3. Make sure that the room temperature is within operating specifications.
4. If there are no other thermal issues, replace the I/O expansion adapter.

80070301-2c04ffff Sensor Mezz Exp 4 temp has transitioned to non-recoverable from a less severe state.

Explanation: The temperature of the I/O expansion adapter in I/O expansion connector 4 has exceeded its specified threshold. The compute node has attempted a soft shutdown.

May also be shown as 800703012c04ffff or 0x800703012c04ffff

Severity: Error

Alert Category: Critical - Temperature

Serviceable: Yes

CIM Information: **Prefix:** PLAT and **ID:** 0524

SNMP Trap ID: 0

Automatically notify Support: No

User response: Complete the following steps until the problem is solved:

1. Check the Chassis Management Module or Flex System Manager event log for any fan- or cooling-related issues.
2. Make sure that the airflow at the front and rear of the chassis is not obstructed and that fillers are in place and correctly installed.
3. Make sure that the room temperature is within operating specifications.
4. If there are no other thermal issues, replace the I/O expansion adapter.

80070301-2d01ffff Sensor PCH Overtemp has transitioned to non-recoverable from a less severe state.

Explanation: A temperature has exceeded its specified threshold. The compute node will attempt a soft shutdown.

May also be shown as 800703012d01ffff or 0x800703012d01ffff

Severity: Error

Alert Category: Critical - Temperature

Serviceable: Yes

CIM Information: **Prefix:** PLAT and **ID:** 0524

SNMP Trap ID: 0

Automatically notify Support: No

User response: Complete the following steps until the problem is solved:

1. Check the Chassis Management Module or Flex System Manager event log for any fan- or cooling-related issues.
2. Make sure that the airflow at the front and rear of the chassis is not obstructed and that fillers are in place and correctly installed.
3. Make sure that the room temperature is within operating specifications.

80070301-3701ffff Sensor Inlet 1 Temp has transitioned to non-recoverable from a less severe state.

Explanation: The inlet 1 temperature has exceeded its specified threshold. The compute node has initiated a hard shutdown.

May also be shown as 800703013701ffff or 0x800703013701ffff

Severity: Error

Alert Category: Critical - Temperature

Serviceable: Yes

CIM Information: **Prefix:** PLAT and **ID:** 0524

SNMP Trap ID: 0

Automatically notify Support: No

User response: Complete the following steps until the problem is solved:

1. Check the Chassis Management Module or Flex System Manager event log for any fan- or cooling-related issues.
2. Make sure that the airflow at the front and rear of the chassis is not obstructed and that fillers are in place and correctly installed.
3. Make sure that the room temperature is within operating specifications.

80070301-3702ffff Sensor Inlet 2 Temp has transitioned to non-recoverable from a less severe state.

Explanation: The inlet 2 temperature has exceeded its specified threshold. The compute node has initiated a hard shutdown.

May also be shown as 800703013702ffff or 0x800703013702ffff

Severity: Error

Alert Category: Critical - Temperature

Serviceable: Yes

CIM Information: **Prefix:** PLAT and **ID:** 0524

SNMP Trap ID: 0

Automatically notify Support: No

User response: Complete the following steps until the problem is solved:

1. Check the Chassis Management Module or Flex System Manager event log for any fan- or cooling-related issues.
2. Make sure that the airflow at the front and rear of the chassis is not obstructed and that fillers are in place and correctly installed.
3. Make sure that the room temperature is within operating specifications.

80070401-2c01ffff Sensor Mezz Exp 1 temp has transitioned to non-critical from a more severe state.

Explanation: The previously high temperature of the I/O expansion adapter in I/O expansion connector 1 has returned to below its specified threshold.

May also be shown as 800704012c01ffff or 0x800704012c01ffff

Severity: Warning

Alert Category: Warning - Temperature

Serviceable: No

CIM Information: **Prefix:** PLAT and **ID:** 0526

SNMP Trap ID: 12

Automatically notify Support: No

User response: Information only; no action is required.

80070401-2c02ffff Sensor Mezz Exp 2 temp has transitioned to non-critical from a more severe state.

Explanation: The previously high temperature of the I/O expansion adapter in I/O expansion connector 2 has returned to below its specified threshold.

May also be shown as 800704012c02ffff or 0x800704012c02ffff

Severity: Warning

Alert Category: Warning - Temperature

Serviceable: No

CIM Information: **Prefix:** PLAT and **ID:** 0526

SNMP Trap ID: 12

Automatically notify Support: No

User response: Information only; no action is required.

80070401-2c03ffff Sensor Mezz Exp 3 temp has transitioned to non-critical from a more severe state.

Explanation: The previously high temperature of the I/O expansion adapter in I/O expansion connector 3 has returned to below its specified threshold.

May also be shown as 800704012c03ffff or 0x800704012c03ffff

Severity: Warning

Alert Category: Warning - Temperature

Serviceable: No

CIM Information: **Prefix:** PLAT and **ID:** 0526

SNMP Trap ID: 12

Automatically notify Support: No

User response: Information only; no action is required.

80070401-2c04ffff Sensor Mezz Exp 4 temp has transitioned to non-critical from a more severe state.

Explanation: The previously high temperature of the I/O expansion adapter in I/O expansion connector 4 has returned to below its specified threshold.

May also be shown as 800704012c04ffff or 0x800704012c04ffff

Severity: Warning

Alert Category: Warning - Temperature

Serviceable: No

CIM Information: **Prefix:** PLAT and **ID:** 0526

SNMP Trap ID: 12

Automatically notify Support: No

User response: Information only; no action is required.

80070601-2c01ffff Sensor Mezz Exp 1 temp has transitioned to non-recoverable.

Explanation: The temperature of the I/O expansion adapter in I/O expansion connector 1 has exceeded its specified threshold. The compute node has attempted a soft shutdown.

May also be shown as 800706012c01ffff or 0x800706012c01ffff

Severity: Error

Alert Category: Critical - Temperature

Serviceable: Yes

CIM Information: **Prefix:** PLAT and **ID:** 0530

SNMP Trap ID: 0

Automatically notify Support: No

User response: Complete the following steps until the problem is solved:

1. Check the Chassis Management Module or Flex System Manager event log for any fan- or cooling-related issues.
2. Make sure that the airflow at the front and rear of the chassis is not obstructed and that fillers are in place and correctly installed.
3. Make sure that the room temperature is within operating specifications.
4. If there are no other thermal issues, replace the I/O expansion adapter.

80070601-2c02ffff Sensor Mezz Exp 2 temp has transitioned to non-recoverable.

Explanation: The temperature of the I/O expansion adapter in I/O expansion connector 2 has exceeded its specified threshold. The compute node has attempted a soft shutdown.

May also be shown as 800706012c02ffff or 0x800706012c02ffff

Severity: Error

Alert Category: Critical - Temperature

Serviceable: Yes

CIM Information: **Prefix:** PLAT and **ID:** 0530

SNMP Trap ID: 0

Automatically notify Support: No

User response: Complete the following steps until the problem is solved:

1. Check the Chassis Management Module or Flex System Manager event log for any fan- or cooling-related issues.
2. Make sure that the airflow at the front and rear of the chassis is not obstructed and that fillers are in place and correctly installed.
3. Make sure that the room temperature is within operating specifications.
4. If there are no other thermal issues, replace the I/O expansion adapter.

80070601-2c03ffff Sensor Mezz Exp 3 temp has transitioned to non-recoverable.

Explanation: The temperature of the I/O expansion adapter in I/O expansion connector 3 has exceeded its specified threshold. The compute node has attempted a soft shutdown.

May also be shown as 800706012c03ffff or 0x800706012c03ffff

Severity: Error

Alert Category: Critical - Temperature

Serviceable: Yes

CIM Information: **Prefix:** PLAT and **ID:** 0530

SNMP Trap ID: 0

Automatically notify Support: No

User response: Complete the following steps until the problem is solved:

1. Check the Chassis Management Module or Flex System Manager event log for any fan- or cooling-related issues.
2. Make sure that the airflow at the front and rear of the chassis is not obstructed and that fillers are in place and correctly installed.
3. Make sure that the room temperature is within operating specifications.
4. If there are no other thermal issues, replace the I/O expansion adapter.

80070601-2c04ffff Sensor Mezz Exp 4 temp has transitioned to non-recoverable.

Explanation: The temperature of the I/O expansion adapter in I/O expansion connector 4 has exceeded its specified threshold. The compute node has attempted a soft shutdown.

May also be shown as 800706012c04ffff or 0x800706012c04ffff

Severity: Error

Alert Category: Critical - Temperature

Serviceable: Yes

CIM Information: **Prefix:** PLAT and **ID:** 0530

SNMP Trap ID: 0

Automatically notify Support: No

User response: Complete the following steps until the problem is solved:

1. Check the Chassis Management Module or Flex System Manager event log for any fan- or cooling-related issues.
2. Make sure that the airflow at the front and rear of the chassis is not obstructed and that fillers are in place and correctly installed.
3. Make sure that the room temperature is within operating specifications.
4. If there are no other thermal issues, replace the I/O expansion adapter.

8007060f-2201ffff Sensor BOFM Config Err has transitioned to non-recoverable.

Explanation: BOFM Config Error has been detected.

May also be shown as 8007060f2201ffff or 0x8007060f2201ffff

Severity: Error

Alert Category: Critical - Other

Serviceable: Yes

CIM Information: **Prefix:** PLAT and **ID:** 0530

SNMP Trap ID: 50

Automatically notify Support: No

User response: This is a UEFI detected event. The UEFI diagnostic code for this event can be found in the logged IMM message text. Please refer to the UEFI diagnostic code in the "UEFI diagnostic code" section of the Information Center for the appropriate user response.

80070614-2201ffff Sensor TPM Phy Pres Set has transitioned to non-recoverable.

Explanation: Trusted Platform Module (TPM) initialization error.

May also be shown as 800706142201ffff or 0x800706142201ffff

Severity: Error

Alert Category: Critical - Other

Serviceable: Yes

CIM Information: **Prefix:** PLAT and **ID:** 0530

SNMP Trap ID: 50

Automatically notify Support: No

User response: This is a UEFI detected event. The UEFI diagnostic code for this event can be found in the logged IMM message text. Please refer to the UEFI diagnostic code in the "UEFI diagnostic code" section of the Info Center for the appropriate user response.

80070617-2c01ffff Sensor Mezz Exp 1 Fault has transitioned to non-recoverable.

Explanation: A problem has been detected in the I/O expansion adapter in I/O expansion connector 1. The adapter is unable to initialize.

May also be shown as 800706172c01ffff or 0x800706172c01ffff

Severity: Error

Alert Category: Critical - Other

Serviceable: Yes

CIM Information: **Prefix:** PLAT and **ID:** 0530

SNMP Trap ID: 50

Automatically notify Support: No

User response: Complete the following steps:

1. Remove the I/O expansion adapter in I/O expansion connector 1.
2. Try to power on the chassis.
   - If the chassis successfully powers on, complete the following steps:
     a. Check the ServerProven website to make sure that recently installed components are compatible with the chassis.
     b. Inspect the previously installed components for physical damage.
   - If the chassis does not successfully power on or if this is not the first occurrence of this problem, replace the I/O expansion adapter.

80070617-2c02ffff Sensor Mezz Exp 2 Fault has transitioned to non-recoverable.

Explanation: A problem was detected in the I/O expansion adapter in I/O expansion connector 2. The adapter is unable to initialize.

May also be shown as 800706172c02ffff or 0x800706172c02ffff

Severity: Error

Alert Category: Critical - Other

Serviceable: Yes

CIM Information: **Prefix:** PLAT and **ID:** 0530

SNMP Trap ID: 50

Automatically notify Support: No

User response: Complete the following steps:

1. Remove the I/O expansion adapter in I/O expansion connector 2.
2. Try to power on the chassis.
   - If the chassis successfully powers on, complete the following steps:
     a. Check the ServerProven website to make sure that recently installed components are compatible with the chassis.
     b. Inspect the previously installed components for physical damage.
   - If the chassis does not successfully power on or if this is not the first occurrence of this problem, replace the I/O expansion adapter.

80070617-2c03ffff Sensor Mezz Exp 3 Fault has transitioned to non-recoverable.

Explanation: A problem was detected in the I/O expansion adapter in I/O expansion connector 3. The adapter is unable to initialize.

May also be shown as 800706172c03ffff or 0x800706172c03ffff

Severity: Error

Alert Category: Critical - Other

Serviceable: Yes

CIM Information: **Prefix:** PLAT and **ID:** 0530

SNMP Trap ID: 50

Automatically notify Support: No

User response: Complete the following steps:

1. Remove the I/O expansion adapter in I/O expansion connector 3.
2. Try to power on the chassis.
   - If the chassis successfully powers on, complete the following steps:
     a. Check the ServerProven website to make sure that recently installed components are compatible with the chassis.
     b. Inspect the previously installed components for physical damage.
   - If the chassis does not successfully power on or if this is not the first occurrence of this problem, replace the I/O expansion adapter.

80070617-2c04ffff Sensor Mezz Exp 4 Fault has transitioned to non-recoverable.

Explanation: A problem was detected in the I/O expansion adapter in I/O expansion connector 4. The adapter is unable to initialize.

May also be shown as 800706172c04ffff or 0x800706172c04ffff

Severity: Error

Alert Category: Critical - Other

Serviceable: Yes

CIM Information: **Prefix:** PLAT and **ID:** 0530

SNMP Trap ID: 50

Automatically notify Support: No

User response: Complete the following steps:

1. Remove the I/O expansion adapter in I/O expansion connector 4.
2. Try to power on the chassis.
   - If the chassis successfully powers on, complete the following steps:
     a. Check the ServerProven website to make sure that recently installed components are compatible with the chassis.
     b. Inspect the previously installed components for physical damage.
   - If the chassis does not successfully power on or if this is not the first occurrence of this problem, replace the I/O expansion adapter.

8008001b-1f07ffff Device Periscope 1 has been removed from unit [PhysicalPackageElementName].

Explanation: The fabric connector for LAN On Motherboard (LOM) in location 1 is not present.

May also be shown as 8008001b1f07ffff or 0x8008001b1f07ffff

Severity: Info

Alert Category: System - Other

Serviceable: No

CIM Information: **Prefix:** PLAT and **ID:** 0537

SNMP Trap ID:

Automatically notify Support: No

User response: Informational message.

On a LOM model compute node, if you are utilizing LOM and it is not working ensure you have the necessary fabric connector installed.

- To utilize the LOM:
  - have the LOM model compute node
  - have the corresponding fabric connector installed
- Information regarding the fabric connectors:
  - LOM 1 utilizes the fabric connector in location 1.
  - LOM 2 utilizes the fabric connector in location 2.
  - I/O expansion adaptor in I/O expansion slot 1 and the fabric connector in slot 1 utilize the same connector and only one of the two can be installed at a time.
  - I/O expansion adaptor in I/O expansion slot 3 and the fabric connector in slot 2 utilize the same connector and only one of the two can be installed at a time.

8008001b-1f08ffff Device Periscope 2 has been removed from unit [PhysicalPackageElementName].

Explanation: The fabric connector for LAN On Motherboard (LOM) in location 2 is not present.

May also be shown as 8008001b1f08ffff or 0x8008001b1f08ffff

Severity: Info

Alert Category: System - Other

Serviceable: No

CIM Information: **Prefix:** PLAT and **ID:** 0537

SNMP Trap ID:

Automatically notify Support: No

User response: Informational message.

On a LOM model compute node, if you are utilizing LOM and it is not working ensure you have the necessary fabric connector installed.

- To utilize the LOM:
  - have the LOM model compute node
  - have the corresponding fabric connector installed
- Information regarding the fabric connectors:
  - LOM 1 utilizes the fabric connector in location 1.
  - LOM 2 utilizes the fabric connector in location 2.
  - I/O expansion adaptor in I/O expansion slot 1 and the fabric connector in slot 1 utilize the same connector and only one of the two can be installed at a time.
  - I/O expansion adaptor in I/O expansion slot 3 and the fabric connector in slot 2 utilize the same connector and only one of the two can be installed at a time.

8008010f-2101ffff Device [LogicalDeviceElementName] has been added.

Explanation: The physical presence jumper has been installed in the compute node.

May also be shown as 8008010f2101ffff or 0x8008010f2101ffff

Severity: Info

Alert Category: System - Other

Serviceable: No

CIM Information: **Prefix:** PLAT and **ID:** 0536

SNMP Trap ID:

Automatically notify Support: No

User response: Information only; no action is required.

8008011b-1f07ffff Device [LogicalDeviceElementName] has been added.

Explanation: The fabric connector for LAN On Motherboard (LOM) in location 1 is present.

May also be shown as 8008011b1f07ffff or 0x8008011b1f07ffff

Severity: Info

Alert Category: System - Other

Serviceable: No

CIM Information: **Prefix:** PLAT and **ID:** 0536

SNMP Trap ID:

Automatically notify Support: No

User response: Informational message.

On a LOM model compute node, if you are utilizing LOM and it is not working ensure you have the necessary fabric connector installed.

- To utilize the LOM:
  - have the LOM model compute node
  - have the corresponding fabric connector installed
- Information regarding the fabric connectors:
  - LOM 1 utilizes the fabric connector in location 1.
  - LOM 2 utilizes the fabric connector in location 2.
  - I/O expansion adaptor in I/O expansion slot 1 and the fabric connector in slot 1 utilize the same connector and only one of the two can be installed at a time.
  - I/O expansion adaptor in I/O expansion slot 3 and the fabric connector in slot 2 utilize the same connector and only one of the two can be installed at a time.

8008011b-1f08ffff Device [LogicalDeviceElementName] has been added.

Explanation: The fabric connector for LAN On Motherboard (LOM) in location 2 is present.

May also be shown as 8008011b1f08ffff or 0x8008011b1f08ffff

Severity: Info

Alert Category: System - Other

Serviceable: No

CIM Information: **Prefix:** PLAT and **ID:** 0536

SNMP Trap ID:

Automatically notify Support: No

User response: Informational message.

On a LOM model compute node, if you are utilizing LOM and it is not working ensure you have the necessary fabric connector installed.

- To utilize the LOM:
  - have the LOM model compute node
  - have the corresponding fabric connector installed
- Information regarding the fabric connectors:
  - LOM 1 utilizes the fabric connector in location 1.
  - LOM 2 utilizes the fabric connector in location 2.

- I/O expansion adaptor in I/O expansion slot 1 and the fabric connector in slot 1 utilize the same connector and only one of the two can be installed at a time.
- I/O expansion adaptor in I/O expansion slot 3 and the fabric connector in slot 2 utilize the same connector and only one of the two can be installed at a time.

80080128-2101ffff Device [LogicalDeviceElementName] has been added.

Explanation: The specified device has been installed in the compute node.

May also be shown as 800801282101ffff or 0x800801282101ffff

Severity: Info

Alert Category: System - Other

Serviceable: No

CIM Information: **Prefix:** PLAT and **ID:** 0536

SNMP Trap ID:

Automatically notify Support: No

User response: Information only; no action is required.

8009000c-0701ffff Device Performance Mode has been disabled.

Explanation: The user has switched from Performance mode to Acoustic mode.

May also be shown as 8009000c0701ffff or 0x8009000c0701ffff

Severity: Info

Alert Category: System - Other

Serviceable: No

CIM Information: **Prefix:** PLAT and **ID:** 0539

SNMP Trap ID:

Automatically notify Support: No

User response: Information only; no action is required.

8009010c-0701ffff Device Performance Mode has been enabled.

Explanation: The user has switched from Acoustic mode to Performance mode.

May also be shown as 8009010c0701ffff or 0x8009010c0701ffff

Severity: Info

Alert Category: System - Other

Serviceable: No

CIM Information: **Prefix:** PLAT and **ID:** 0538

SNMP Trap ID:

Automatically notify Support: No

User response: Information only; no action is required.

80090112-2101ffff Device [LogicalDeviceElementName] has been enabled.

Explanation: An IPMI or SNMP Account has been enabled.

May also be shown as 800901122101ffff or 0x800901122101ffff

Severity: Info

Alert Category: System - Other

Serviceable: No

CIM Information: **Prefix:** PLAT and **ID:** 0538

SNMP Trap ID:

Automatically notify Support: No

User response: Information only; no action is required.

800b010c-2581ffff Redundancy Lost for [RedundancySetElementName] has asserted.

Explanation: This message is for the use case when Redundancy Lost has asserted.

May also be shown as 800b010c2581ffff or 0x800b010c2581ffff

Severity: Error

Alert Category: Critical - Memory

Serviceable: Yes

CIM Information: **Prefix:** PLAT and **ID:** 0802

SNMP Trap ID: 41

Automatically notify Support: No

User response: This is a UEFI detected event. The UEFI diagnostic code for this event can be found in the logged IMM message text. Please refer to the UEFI diagnostic code in the "UEFI diagnostic code" section of the Information Center for the appropriate user response.

800b030c-2581ffff Non-redundant:Sufficient Resources from Redundancy Degraded or Fully Redundant for [RedundancySetElementName] has asserted.

Explanation: This message is for the use case when a Redundancy Set has transitioned from Redundancy Degraded or Fully Redundant to Non-redundant:Sufficient.

May also be shown as 800b030c2581ffff or 0x800b030c2581ffff

Severity: Warning

Alert Category: Warning - Memory

Serviceable: Yes

CIM Information: **Prefix:** PLAT and **ID:** 0806

SNMP Trap ID: 43

Automatically notify Support: No

User response: This is a UEFI detected event. The UEFI diagnostic code for this event can be found in the logged IMM message text. Please refer to the UEFI diagnostic code in the "UEFI diagnostic code" section of the Information Center for the appropriate user response.

800b050c-2581ffff Non-redundant:Insufficient Resources for [RedundancySetElementName] has asserted.

Explanation: This message is for the use case when a Redundancy Set has transitioned to Non-redundant:Insufficient Resources.

May also be shown as 800b050c2581ffff or 0x800b050c2581ffff

Severity: Error

Alert Category: Critical - Memory

Serviceable: Yes

CIM Information: **Prefix:** PLAT and **ID:** 0810

SNMP Trap ID: 41

Automatically notify Support: No

User response: This is a UEFI detected event. The UEFI diagnostic code for this event can be found in the logged IMM message text. Please refer to the UEFI diagnostic code in the "UEFI diagnostic code" section of the Information Center for the appropriate user response.

806f0007-0301ffff CPU 1 has Failed with IERR.

Explanation: This message is for the use case when an implementation has detected a Processor Failed - IERR Condition.

May also be shown as 806f00070301ffff or 0x806f00070301ffff

Severity: Error

Alert Category: Critical - CPU

Serviceable: Yes

CIM Information: **Prefix:** PLAT and **ID:** 0042

SNMP Trap ID: 40

Automatically notify Support: No

User response: This is a UEFI detected event. The UEFI diagnostic code for this event can be found in the logged IMM message text. Please refer to the UEFI diagnostic code in the "UEFI diagnostic code" section of the Information Center for the appropriate user response.

806f0007-0302ffff CPU 2 has Failed with IERR.

Explanation: This message is for the use case when an implementation has detected a Processor Failed - IERR Condition.

May also be shown as 806f00070302ffff or 0x806f00070302ffff

Severity: Error

Alert Category: Critical - CPU

Serviceable: Yes

CIM Information: **Prefix:** PLAT and **ID:** 0042

SNMP Trap ID: 40

Automatically notify Support: No

User response: This is a UEFI detected event. The UEFI diagnostic code for this event can be found in the logged IMM message text. Please refer to the UEFI diagnostic code in the "UEFI diagnostic code" section of the Information Center for the appropriate user response.

806f0007-0303ffff CPU 3 has Failed with IERR.

Explanation: This message is for the use case when an implementation has detected a Processor Failed - IERR Condition.

May also be shown as 806f00070303ffff or 0x806f00070303ffff

Severity: Error

Alert Category: Critical - CPU

Serviceable: Yes

CIM Information: **Prefix:** PLAT and **ID:** 0042

SNMP Trap ID: 40

Automatically notify Support: No

User response: This is a UEFI detected event. The UEFI diagnostic code for this event can be found in the logged IMM message text. Please refer to the UEFI diagnostic code in the "UEFI diagnostic code" section of the Information Center for the appropriate user response.

806f0007-0304ffff CPU 4 has Failed with IERR.

Explanation: This message is for the use case when an implementation has detected a Processor Failed - IERR Condition.

May also be shown as 806f00070304ffff or 0x806f00070304ffff

Severity: Error

Alert Category: Critical - CPU

Serviceable: Yes

CIM Information: **Prefix:** PLAT and **ID:** 0042

SNMP Trap ID: 40

Automatically notify Support: No

User response: This is a UEFI detected event. The UEFI diagnostic code for this event can be found in the logged IMM message text. Please refer to the UEFI diagnostic code in the "UEFI diagnostic code" section of the Information Center for the appropriate user response.

806f0007-2584ffff [ProcessorElementName] has Failed with IERR.

Explanation: This message is for the use case when an implementation has detected a Processor Failed - IERR Condition. All CPUs. One of CPUs.

May also be shown as 806f00072584ffff or 0x806f00072584ffff

Severity: Error

Alert Category: Critical - CPU

Serviceable: Yes

CIM Information: **Prefix:** PLAT and **ID:** 0042

SNMP Trap ID: 40

Automatically notify Support: No

User response: This is a UEFI detected event. The UEFI diagnostic code for this event can be found in the logged IMM message text. Please refer to the UEFI diagnostic code in the "UEFI diagnostic code" section of the Information Center for the appropriate user response.

806f0009-0701ffff system board 1 has been turned off.

Explanation: The compute node has been powered off.

May also be shown as 806f00090701ffff or 0x806f00090701ffff

Severity: Info

Alert Category: System - Power Off

Serviceable: No

CIM Information: **Prefix:** PLAT and **ID:** 0106

SNMP Trap ID: 23

Automatically notify Support: No

User response: Information only; no action is required.

806f000d-0400ffff The Drive Drive 0 has been added.

Explanation: Hard disk drive 0 has been installed.

May also be shown as 806f000d0400ffff or 0x806f000d0400ffff

Severity: Info

Alert Category: Critical - Hard Disk drive

Serviceable: No

CIM Information: **Prefix:** PLAT and **ID:** 0162

SNMP Trap ID: 5

Automatically notify Support: No

User response: Information only; no action is required.

806f000d-0401ffff The Drive Drive 1 has been added.

Explanation: Hard disk drive 1 has been installed.

May also be shown as 806f000d0401ffff or 0x806f000d0401ffff

Severity: Info

Alert Category: Critical - Hard Disk drive

Serviceable: No

CIM Information: **Prefix:** PLAT and **ID:** 0162

SNMP Trap ID: 5

Automatically notify Support: No

User response: Information only; no action is required.

806f000d-0402ffff The Drive Drive 2 has been added.

Explanation: Hard disk drive 2 has been installed.

May also be shown as 806f000d0402ffff or 0x806f000d0402ffff

Severity: Info

Alert Category: Critical - Hard Disk drive

Serviceable: No

CIM Information: **Prefix:** PLAT and **ID:** 0162

SNMP Trap ID: 5

Automatically notify Support: No

User response: Information only; no action is required.

806f000d-0403ffff The Drive Drive 3 has been added.

Explanation: Hard disk drive 3 has been installed.

May also be shown as 806f000d0403ffff or 0x806f000d0403ffff

Severity: Info

Alert Category: Critical - Hard Disk drive

Serviceable: No

CIM Information: **Prefix:** PLAT and **ID:** 0162

SNMP Trap ID: 5

Automatically notify Support: No

User response: Information only; no action is required.

806f000d-0404ffff The Drive Drive 4 has been added.

Explanation: Hard disk drive 4 has been installed.

May also be shown as 806f000d0404ffff or 0x806f000d0404ffff

Severity: Info

Alert Category: Critical - Hard Disk drive

Serviceable: No

CIM Information: **Prefix:** PLAT and **ID:** 0162

SNMP Trap ID: 5

Automatically notify Support: No

User response: Information only; no action is required.

806f000d-0405ffff The Drive [StorageVolumeElementName] has been added.

Explanation: Hard disk drive 5 has been installed.

May also be shown as 806f000d0405ffff or 0x806f000d0405ffff

Severity: Info

Alert Category: Critical - Hard Disk drive

Serviceable: No

CIM Information: **Prefix:** PLAT and **ID:** 0162

SNMP Trap ID: 5

Automatically notify Support: No

User response: Information only; no action is required.

806f000d-0406ffff The Drive Drive 6 has been added.

Explanation: Hard disk drive 6 has been installed.

May also be shown as 806f000d0406ffff or 0x806f000d0406ffff

Severity: Info

Alert Category: Critical - Hard Disk drive

Serviceable: No

CIM Information: **Prefix:** PLAT and **ID:** 0162

SNMP Trap ID: 5

Automatically notify Support: No

User response: Information only; no action is required.

806f000d-0407ffff The Drive Drive 7 has been added.

Explanation: Hard disk drive 7 has been installed.

May also be shown as 806f000d0407ffff or 0x806f000d0407ffff

Severity: Info

Alert Category: Critical - Hard Disk drive

Serviceable: No

CIM Information: **Prefix:** PLAT and **ID:** 0162

SNMP Trap ID: 5

Automatically notify Support: No

User response: Information only; no action is required.

806f000f-220101ff The System [ComputerSystemElementName] has detected no memory in the system.

Explanation: This message is for the use case when an implementation has detected that memory was detected in the system. ABR Status. Firmware Error.

May also be shown as 806f000f220101ff or 0x806f000f220101ff

Severity: Error

Alert Category: Critical - Memory

Serviceable: Yes

CIM Information: **Prefix:** PLAT and **ID:** 0794

SNMP Trap ID: 41

Automatically notify Support: No

User response: This is a UEFI detected event. The UEFI diagnostic code for this event can be found in the logged IMM message text. Please refer to the UEFI diagnostic code in the "UEFI diagnostic code" section of the Information Center for the appropriate user response.

806f000f-220102ff Subsystem [MemoryElementName] has insufficient memory for operation.

Explanation: This message is for the use case when an implementation has detected that the usable Memory is insufficient for operation. ABR Status : Firmware Error :

May also be shown as 806f000f220102ff or 0x806f000f220102ff

Severity: Error

Alert Category: Critical - Memory

Serviceable: Yes

CIM Information: **Prefix:** PLAT and **ID:** 0132

SNMP Trap ID: 41

Automatically notify Support: No

User response: This is a UEFI detected event. The UEFI diagnostic code for this event can be found in the logged IMM message text. Please refer to the UEFI diagnostic code in the "UEFI diagnostic code" section of the Information Center for the appropriate user response.

806f000f-220103ff The System [ComputerSystemElementName] encountered firmware error - unrecoverable boot device failure.

Explanation: This message is for the use case when an implementation has detected that System Firmware Error Unrecoverable boot device failure has occurred.

May also be shown as 806f000f220103ff or 0x806f000f220103ff

Severity: Error

Alert Category: Critical - Hard Disk drive

Serviceable: Yes

CIM Information: **Prefix:** PLAT and **ID:** 0770

SNMP Trap ID: 5

Automatically notify Support: No

User response: ABR Status : Firmware Error : This is a UEFI detected event. The UEFI diagnostic code for this event can be found in the logged IMM message text. Please refer to the UEFI diagnostic code in the "UEFI diagnostic code" section of the Information Center for the appropriate user response.

806f000f-220104ff The System [ComputerSystemElementName]has encountered a motherboard failure.

Explanation: This message is for the use case when an implementation has detected that a fatal motherboard failure in the system. ABR Status. Firmware Error.

May also be shown as 806f000f220104ff or 0x806f000f220104ff

Severity: Error

Alert Category: Critical - Other

Serviceable: Yes

CIM Information: **Prefix:** PLAT and **ID:** 0795

SNMP Trap ID: 50

Automatically notify Support: No

User response: This is a UEFI detected event. The UEFI diagnostic code for this event can be found in the logged IMM message text. Please refer to the UEFI diagnostic code in the "UEFI diagnostic code" section of the Information Center for the appropriate user response.

806f000f-220107ff The System [ComputerSystemElementName] encountered firmware error - unrecoverable keyboard failure.

Explanation: This message is for the use case when an implementation has detected that System Firmware Error Unrecoverable Keyboard failure has occurred. ABR Status. Firmware Error.

May also be shown as 806f000f220107ff or 0x806f000f220107ff

Severity: Error

Alert Category: Critical - Other

Serviceable: Yes

CIM Information: **Prefix:** PLAT and **ID:** 0764

SNMP Trap ID: 50

Automatically notify Support: No

User response: This is a UEFI detected event. The UEFI diagnostic code for this event can be found in the logged IMM message text. Please refer to the UEFI diagnostic code in the "UEFI diagnostic code" section of the Information Center for the appropriate user response.

806f000f-22010aff The System [ComputerSystemElementName] encountered firmware error - no video device detected.

Explanation: This message is for the use case when an implementation has detected that System Firmware Error No video device detected has occurred. ABR Status. Firmware Error.

May also be shown as 806f000f22010aff or 0x806f000f22010aff

Severity: Error

Alert Category: Critical - Other

Serviceable: Yes

CIM Information: **Prefix:** PLAT and **ID:** 0766

SNMP Trap ID: 50

Automatically notify Support: No

User response: This is a UEFI detected event. The UEFI diagnostic code for this event can be found in the logged IMM message text. Please refer to the UEFI diagnostic code in the "UEFI diagnostic code" section of the Information Center for the appropriate user response.

806f000f-22010bff Firmware BIOS (ROM) corruption was detected on system [ComputerSystemElementName] during POST.

Explanation: Firmware BIOS (ROM) corruption was detected on the system during POST. ABR Status. Firmware Error.

May also be shown as 806f000f22010bff or 0x806f000f22010bff

Severity: Error

Alert Category: Critical - Other

Serviceable: Yes

CIM Information: **Prefix:** PLAT and **ID:** 0850

SNMP Trap ID: 50

Automatically notify Support: No

User response: This is a UEFI detected event. The UEFI diagnostic code for this event can be found in the logged IMM message text. Please refer to the UEFI diagnostic code in the "UEFI diagnostic code" section of the Information Center for the appropriate user response.

806f000f-22010cff CPU voltage mismatch detected on [ProcessorElementName].

Explanation: This message is for the use case when an implementation has detected a CPU voltage mismatch with the socket voltage. ABR Status. Firmware Error. Sys Boot Status.

May also be shown as 806f000f22010cff or 0x806f000f22010cff

Severity: Error

Alert Category: Critical - CPU

Serviceable: Yes

CIM Information: **Prefix:** PLAT and **ID:** 0050

SNMP Trap ID: 40

Automatically notify Support: No

User response: This is a UEFI detected event. The UEFI diagnostic code for this event can be found in the logged IMM message text. Please refer to the UEFI diagnostic code in the "UEFI diagnostic code" section of the Information Center for the appropriate user response.

806f000f-2201ffff The System [ComputerSystemElementName] encountered a POST Error.

Explanation: This message is for the use case when an implementation has detected a Post Error. ABR Status. Firmware Error.

May also be shown as 806f000f2201ffff or 0x806f000f2201ffff

Severity: Error

Alert Category: Critical - Other

Serviceable: Yes

CIM Information: **Prefix:** PLAT and **ID:** 0184

SNMP Trap ID: 50

Automatically notify Support: No

User response: This is a UEFI detected event. The UEFI diagnostic code for this event can be found in the logged IMM message text. Please refer to the UEFI diagnostic code in the "UEFI diagnostic code" section of the Information Center for the appropriate user response.

806f0013-1701ffff A diagnostic interrupt has occurred on system [ComputerSystemElementName].

Explanation: The user has pressed the NMI button, or the NMI button has malfunctioned.

May also be shown as 806f00131701ffff or 0x806f00131701ffff

Severity: Error

Alert Category: Critical - Other

Serviceable: Yes

CIM Information: **Prefix:** PLAT and **ID:** 0222

SNMP Trap ID: 50

Automatically notify Support: No

User response: If the NMI button on the operator information panel has not been pressed, complete the following steps:

1. Make sure that the NMI button is not pressed.
2. Replace the system board.

806f0021-2201ffff Fault in slot [PhysicalConnectorSystemElementName] on system [ComputerSystemElementName].

Explanation: This message is for the use case when an implementation has detected a Fault in a slot. No Op ROM Space.

May also be shown as 806f00212201ffff or 0x806f00212201ffff

Severity: Error

Alert Category: Critical - Other

Serviceable: Yes

CIM Information: **Prefix:** PLAT and **ID:** 0330

SNMP Trap ID: 50

Automatically notify Support: Yes

User response: This is a UEFI detected event. The UEFI diagnostic code for this event can be found in the logged IMM message text. Please refer to the UEFI diagnostic code in the "UEFI diagnostic code" section of the Information Center for the appropriate user response.

806f0021-2582ffff Fault in slot [PhysicalConnectorSystemElementName] on system [ComputerSystemElementName].

Explanation: This message is for the use case when an implementation has detected a Fault in a slot. PCIe Error.

May also be shown as 806f00212582ffff or 0x806f00212582ffff

Severity: Error

Alert Category: Critical - Other

Serviceable: Yes

CIM Information: **Prefix:** PLAT and **ID:** 0330

SNMP Trap ID: 50

Automatically notify Support: Yes

User response: This is a UEFI detected event. The UEFI diagnostic code for this event can be found in the logged

IMM message text. Please refer to the UEFI diagnostic code in the "UEFI diagnostic code" section of the Information Center for the appropriate user response.

806f0023-2101ffff Watchdog Timer expired for IPMI Watchdog.

Explanation: The IPMI watchdog timer has expired.

May also be shown as 806f00232101ffff or 0x806f00232101ffff

Severity: Info

Alert Category: System - Other

Serviceable: No

CIM Information: **Prefix:** PLAT and **ID:** 0368

SNMP Trap ID:

Automatically notify Support: No

User response: Information only; no action is required.

806f0028-2101ffff Sensor TPM Cmd Failures is unavailable or degraded on management system [ComputerSystemElementName].

Explanation: TPM initialization or start up commands have failed.

May also be shown as 806f00282101ffff or 0x806f00282101ffff

Severity: Warning

Alert Category: Warning - Other

Serviceable: Yes

CIM Information: **Prefix:** PLAT and **ID:** 0398

SNMP Trap ID: 60

Automatically notify Support: No

User response:

1. Reboot the system.
2. If error persists, or boot is unsuccessful, (Trained service technician only) Replace the system board..

806f0107-0301ffff An over-temperature condition has been detected on [ProcessorElementName].

Explanation: The temperature of microprocessor 1 has exceeded the critical level, causing a hard shutdown of the compute node.

May also be shown as 806f01070301ffff or 0x806f01070301ffff

Severity: Error

Alert Category: Critical - Temperature

Serviceable: Yes

CIM Information: **Prefix:** PLAT and **ID:** 0036

SNMP Trap ID: 0

Automatically notify Support: No

User response: Complete the following steps until the problem is solved:

1. Check the Chassis Management Module or Flex System Manager event log for any fan- or cooling-related issues.
2. Make sure that the airflow at the front and rear of the chassis is not obstructed and that fillers are in place and correctly installed.
3. Make sure that the room temperature is within operating specifications.

4. Make sure that the microprocessor 1 heat sink is securely installed.
5. Make sure that the microprocessor 1 heat sink is installed correctly and the thermal material is correctly applied.
6. Replace microprocessor 1.

806f0107-0302ffff An over-temperature condition has been detected on [ProcessorElementName].

Explanation: The temperature of microprocessor 2 has exceeded the critical level, causing a hard shutdown of the compute node.

May also be shown as 806f01070302ffff or 0x806f01070302ffff

Severity: Error

Alert Category: Critical - Temperature

Serviceable: Yes

CIM Information: **Prefix:** PLAT and **ID:** 0036

SNMP Trap ID: 0

Automatically notify Support: No

User response: Complete the following steps until the problem is solved:

1. Check the Chassis Management Module or Flex System Manager event log for any fan- or cooling-related issues.
2. Make sure that the airflow at the front and rear of the chassis is not obstructed and that fillers are in place and correctly installed.
3. Make sure that the room temperature is within operating specifications.
4. Make sure that the microprocessor heat sink is securely installed.
5. Make sure that the microprocessor heat sink is installed correctly and the thermal material is correctly applied.
6. Replace microprocessor 2.

806f0107-0303ffff An over-temperature condition has been detected on [ProcessorElementName].

Explanation: The temperature of microprocessor 3 has exceeded the critical level, causing a hard shutdown of the compute node.

May also be shown as 806f01070303ffff or 0x806f01070303ffff

Severity: Error

Alert Category: Critical - Temperature

Serviceable: Yes

CIM Information: **Prefix:** PLAT and **ID:** 0036

SNMP Trap ID: 0

Automatically notify Support: No

User response: Complete the following steps until the problem is solved:

1. Check the Chassis Management Module or Flex System Manager event log for any fan- or cooling-related issues.
2. Make sure that the airflow at the front and rear of the chassis is not obstructed and that fillers are in place and correctly installed.
3. Make sure that the room temperature is within operating specifications.
4. Make sure that the microprocessor heat sink is securely installed.
5. Make sure that the microprocessor heat sink is installed correctly and the thermal material is correctly applied.
6. Replace microprocessor 3.

806f0107-0304ffff An over-temperature condition has been detected on [ProcessorElementName].

Explanation: The temperature of microprocessor 4 has exceeded the critical level, causing a hard shutdown of the compute node.

May also be shown as 806f01070304ffff or 0x806f01070304ffff

Severity: Error

Alert Category: Critical - Temperature

Serviceable: Yes

CIM Information: **Prefix:** PLAT and **ID:** 0036

SNMP Trap ID: 0

Automatically notify Support: No

User response: Complete the following steps until the problem is solved:

1. Check the Chassis Management Module or Flex System Manager event log for any fan- or cooling-related issues.
2. Make sure that the airflow at the front and rear of the chassis is not obstructed and that fillers are in place and correctly installed.
3. Make sure that the room temperature is within operating specifications.
4. Make sure that the microprocessor heat sink is securely installed.
5. Make sure that the microprocessor heat sink is installed correctly and the thermal material is correctly applied.
6. Replace microprocessor 4.

806f0107-2584ffff An over-temperature condition has been detected on [ProcessorElementName].

Explanation: The temperature of the specified microprocessor has risen above its specified threshold.

May also be shown as 806f01072584ffff or 0x806f01072584ffff

Severity: Error

Alert Category: Critical - Temperature

Serviceable: Yes

CIM Information: **Prefix:** PLAT and **ID:** 0036

SNMP Trap ID: 0

Automatically notify Support: No

User response: Complete the following steps until the problem is solved:

1. Check the Chassis Management Module or Flex System Manager event log for any fan- or cooling-related issues.
2. Make sure that the airflow at the front and rear of the chassis is not obstructed and that fillers are in place and correctly installed.
3. Make sure that the room temperature is within operating specifications.
4. Make sure that the heat sink for the specified microprocessor is securely installed.
5. Make sure that the heat sink for the specified microprocessor is installed correctly and the thermal material is correctly applied.
6. Replace the specified microprocessor.

806f0109-0701ffff system board 1 has been Power Cycled.

Explanation: The compute node has been powered off and powered on.

May also be shown as 806f01090701ffff or 0x806f01090701ffff

Severity: Info

Alert Category: System - Other

Serviceable: No

CIM Information: **Prefix:** PLAT and **ID:** 0108

SNMP Trap ID:

Automatically notify Support: No

User response: Information only; no action is required.

806f010c-2001ffff Uncorrectable error detected for [PhysicalMemoryElementName] on Subsystem [MemoryElementName].

Explanation: This message is for the use case when an implementation has detected a Memory uncorrectable error.

May also be shown as 806f010c2001ffff or 0x806f010c2001ffff

Severity: Error

Alert Category: Critical - Memory

Serviceable: Yes

CIM Information: **Prefix:** PLAT and **ID:** 0138

SNMP Trap ID: 41

Automatically notify Support: Yes

User response: This is a UEFI detected event. The UEFI diagnostic code for this event can be found in the logged IMM message text. Please refer to the UEFI diagnostic code in the "UEFI diagnostic code" section of the Information Center for the appropriate user response.

806f010c-2002ffff Uncorrectable error detected for [PhysicalMemoryElementName] on Subsystem [MemoryElementName].

Explanation: This message is for the use case when an implementation has detected a Memory uncorrectable error.

May also be shown as 806f010c2002ffff or 0x806f010c2002ffff

Severity: Error

Alert Category: Critical - Memory

Serviceable: Yes

CIM Information: **Prefix:** PLAT and **ID:** 0138

SNMP Trap ID: 41

Automatically notify Support: Yes

User response: This is a UEFI detected event. The UEFI diagnostic code for this event can be found in the logged IMM message text. Please refer to the UEFI diagnostic code in the "UEFI diagnostic code" section of the Information Center for the appropriate user response.

806f010c-2003ffff Uncorrectable error detected for [PhysicalMemoryElementName] on Subsystem [MemoryElementName].

Explanation: This message is for the use case when an implementation has detected a Memory uncorrectable error.

May also be shown as 806f010c2003ffff or 0x806f010c2003ffff

Severity: Error

Alert Category: Critical - Memory

Serviceable: Yes

CIM Information: **Prefix:** PLAT and **ID:** 0138

SNMP Trap ID: 41

Automatically notify Support: Yes

User response: This is a UEFI detected event. The UEFI diagnostic code for this event can be found in the logged IMM message text. Please refer to the UEFI diagnostic code in the "UEFI diagnostic code" section of the Information Center for the appropriate user response.

806f010c-2004ffff Uncorrectable error detected for [PhysicalMemoryElementName] on Subsystem [MemoryElementName].

Explanation: This message is for the use case when an implementation has detected a Memory uncorrectable error.

May also be shown as 806f010c2004ffff or 0x806f010c2004ffff

Severity: Error

Alert Category: Critical - Memory

Serviceable: Yes

CIM Information: **Prefix:** PLAT and **ID:** 0138

SNMP Trap ID: 41

Automatically notify Support: Yes

User response: This is a UEFI detected event. The UEFI diagnostic code for this event can be found in the logged IMM message text. Please refer to the UEFI diagnostic code in the "UEFI diagnostic code" section of the Information Center for the appropriate user response.

806f010c-2005ffff Uncorrectable error detected for [PhysicalMemoryElementName] on Subsystem [MemoryElementName].

Explanation: This message is for the use case when an implementation has detected a Memory uncorrectable error.

May also be shown as 806f010c2005ffff or 0x806f010c2005ffff

Severity: Error

Alert Category: Critical - Memory

Serviceable: Yes

CIM Information: **Prefix:** PLAT and **ID:** 0138

SNMP Trap ID: 41

Automatically notify Support: Yes

User response: This is a UEFI detected event. The UEFI diagnostic code for this event can be found in the logged IMM message text. Please refer to the UEFI diagnostic code in the "UEFI diagnostic code" section of the Information Center for the appropriate user response.

806f010c-2006ffff Uncorrectable error detected for [PhysicalMemoryElementName] on Subsystem [MemoryElementName].

Explanation: This message is for the use case when an implementation has detected a Memory uncorrectable error.

May also be shown as 806f010c2006ffff or 0x806f010c2006ffff

Severity: Error

Alert Category: Critical - Memory

Serviceable: Yes

CIM Information: **Prefix:** PLAT and **ID:** 0138

SNMP Trap ID: 41

Automatically notify Support: Yes

User response: This is a UEFI detected event. The UEFI diagnostic code for this event can be found in the logged IMM message text. Please refer to the UEFI diagnostic code in the "UEFI diagnostic code" section of the Information Center for the appropriate user response.

806f010c-2007ffff Uncorrectable error detected for [PhysicalMemoryElementName] on Subsystem [MemoryElementName].

Explanation: This message is for the use case when an implementation has detected a Memory uncorrectable error.

May also be shown as 806f010c2007ffff or 0x806f010c2007ffff

Severity: Error

Alert Category: Critical - Memory

Serviceable: Yes

CIM Information: **Prefix:** PLAT and **ID:** 0138

SNMP Trap ID: 41

Automatically notify Support: Yes

User response: This is a UEFI detected event. The UEFI diagnostic code for this event can be found in the logged IMM message text. Please refer to the UEFI diagnostic code in the "UEFI diagnostic code" section of the Information Center for the appropriate user response.

806f010c-2008ffff Uncorrectable error detected for [PhysicalMemoryElementName] on Subsystem [MemoryElementName].

Explanation: This message is for the use case when an implementation has detected a Memory uncorrectable error.

May also be shown as 806f010c2008ffff or 0x806f010c2008ffff

Severity: Error

Alert Category: Critical - Memory

Serviceable: Yes

CIM Information: **Prefix:** PLAT and **ID:** 0138

SNMP Trap ID: 41

Automatically notify Support: Yes

User response: This is a UEFI detected event. The UEFI diagnostic code for this event can be found in the logged IMM message text. Please refer to the UEFI diagnostic code in the "UEFI diagnostic code" section of the Information Center for the appropriate user response.

806f010c-2009ffff Uncorrectable error detected for [PhysicalMemoryElementName] on Subsystem [MemoryElementName].

Explanation: This message is for the use case when an implementation has detected a Memory uncorrectable error.

May also be shown as 806f010c2009ffff or 0x806f010c2009ffff

Severity: Error

Alert Category: Critical - Memory

Serviceable: Yes

CIM Information: **Prefix:** PLAT and **ID:** 0138

SNMP Trap ID: 41

Automatically notify Support: Yes

User response: This is a UEFI detected event. The UEFI diagnostic code for this event can be found in the logged IMM message text. Please refer to the UEFI diagnostic code in the "UEFI diagnostic code" section of the Information Center for the appropriate user response.

806f010c-200affff Uncorrectable error detected for [PhysicalMemoryElementName] on Subsystem [MemoryElementName].

Explanation: This message is for the use case when an implementation has detected a Memory uncorrectable error.

May also be shown as 806f010c200affff or 0x806f010c200affff

Severity: Error

Alert Category: Critical - Memory

Serviceable: Yes

CIM Information: **Prefix:** PLAT and **ID:** 0138

SNMP Trap ID: 41

Automatically notify Support: Yes

User response: This is a UEFI detected event. The UEFI diagnostic code for this event can be found in the logged IMM message text. Please refer to the UEFI diagnostic code in the "UEFI diagnostic code" section of the Information Center for the appropriate user response.

806f010c-200bffff Uncorrectable error detected for [PhysicalMemoryElementName] on Subsystem [MemoryElementName].

Explanation: This message is for the use case when an implementation has detected a Memory uncorrectable error.

May also be shown as 806f010c200bffff or 0x806f010c200bffff

Severity: Error

Alert Category: Critical - Memory

Serviceable: Yes

CIM Information: **Prefix:** PLAT and **ID:** 0138

SNMP Trap ID: 41

Automatically notify Support: Yes

User response: This is a UEFI detected event. The UEFI diagnostic code for this event can be found in the logged IMM message text. Please refer to the UEFI diagnostic code in the "UEFI diagnostic code" section of the Information Center for the appropriate user response.

806f010c-200cffff Uncorrectable error detected for [PhysicalMemoryElementName] on Subsystem [MemoryElementName].

Explanation: This message is for the use case when an implementation has detected a Memory uncorrectable error.

May also be shown as 806f010c200cffff or 0x806f010c200cffff

Severity: Error

Alert Category: Critical - Memory

Serviceable: Yes

CIM Information: **Prefix:** PLAT and **ID:** 0138

SNMP Trap ID: 41

Automatically notify Support: Yes

User response: This is a UEFI detected event. The UEFI diagnostic code for this event can be found in the logged IMM message text. Please refer to the UEFI diagnostic code in the "UEFI diagnostic code" section of the Information Center for the appropriate user response.

806f010c-200dffff Uncorrectable error detected for [PhysicalMemoryElementName] on Subsystem [MemoryElementName].

Explanation: This message is for the use case when an implementation has detected a Memory uncorrectable error.

May also be shown as 806f010c200dffff or 0x806f010c200dffff

Severity: Error

Alert Category: Critical - Memory

Serviceable: Yes

CIM Information: **Prefix:** PLAT and **ID:** 0138

SNMP Trap ID: 41

Automatically notify Support: Yes

User response: This is a UEFI detected event. The UEFI diagnostic code for this event can be found in the logged IMM message text. Please refer to the UEFI diagnostic code in the "UEFI diagnostic code" section of the Information Center for the appropriate user response.

806f010c-200effff Uncorrectable error detected for [PhysicalMemoryElementName] on Subsystem [MemoryElementName].

Explanation: This message is for the use case when an implementation has detected a Memory uncorrectable error.

May also be shown as 806f010c200effff or 0x806f010c200effff

Severity: Error

Alert Category: Critical - Memory

Serviceable: Yes

CIM Information: **Prefix:** PLAT and **ID:** 0138

SNMP Trap ID: 41

Automatically notify Support: Yes

User response: This is a UEFI detected event. The UEFI diagnostic code for this event can be found in the logged IMM message text. Please refer to the UEFI diagnostic code in the "UEFI diagnostic code" section of the Information Center for the appropriate user response.

806f010c-200fffff Uncorrectable error detected for [PhysicalMemoryElementName] on Subsystem [MemoryElementName].

Explanation: This message is for the use case when an implementation has detected a Memory uncorrectable error.

May also be shown as 806f010c200fffff or 0x806f010c200fffff

Severity: Error

Alert Category: Critical - Memory

Serviceable: Yes

CIM Information: **Prefix:** PLAT and **ID:** 0138

SNMP Trap ID: 41

Automatically notify Support: Yes

User response: This is a UEFI detected event. The UEFI diagnostic code for this event can be found in the logged IMM message text. Please refer to the UEFI diagnostic code in the "UEFI diagnostic code" section of the Information Center for the appropriate user response.

806f010c-2010ffff Uncorrectable error detected for [PhysicalMemoryElementName] on Subsystem [MemoryElementName].

Explanation: This message is for the use case when an implementation has detected a Memory uncorrectable error.

May also be shown as 806f010c2010ffff or 0x806f010c2010ffff

Severity: Error

Alert Category: Critical - Memory

Serviceable: Yes

CIM Information: **Prefix:** PLAT and **ID:** 0138

SNMP Trap ID: 41

Automatically notify Support: Yes

User response: This is a UEFI detected event. The UEFI diagnostic code for this event can be found in the logged IMM message text. Please refer to the UEFI diagnostic code in the "UEFI diagnostic code" section of the Information Center for the appropriate user response.

806f010c-2011ffff Uncorrectable error detected for [PhysicalMemoryElementName] on Subsystem [MemoryElementName].

Explanation: This message is for the use case when an implementation has detected a Memory uncorrectable error.

May also be shown as 806f010c2011ffff or 0x806f010c2011ffff

Severity: Error

Alert Category: Critical - Memory

Serviceable: Yes

CIM Information: **Prefix:** PLAT and **ID:** 0138

SNMP Trap ID: 41

Automatically notify Support: Yes

User response: This is a UEFI detected event. The UEFI diagnostic code for this event can be found in the logged IMM message text. Please refer to the UEFI diagnostic code in the "UEFI diagnostic code" section of the Information Center for the appropriate user response.

806f010c-2012ffff Uncorrectable error detected for [PhysicalMemoryElementName] on Subsystem [MemoryElementName].

Explanation: This message is for the use case when an implementation has detected a Memory uncorrectable error.

May also be shown as 806f010c2012ffff or 0x806f010c2012ffff

Severity: Error

Alert Category: Critical - Memory

Serviceable: Yes

CIM Information: **Prefix:** PLAT and **ID:** 0138

SNMP Trap ID: 41

Automatically notify Support: Yes

User response: This is a UEFI detected event. The UEFI diagnostic code for this event can be found in the logged IMM message text. Please refer to the UEFI diagnostic code in the "UEFI diagnostic code" section of the Information Center for the appropriate user response.

806f010c-2013ffff Uncorrectable error detected for [PhysicalMemoryElementName] on Subsystem [MemoryElementName].

Explanation: This message is for the use case when an implementation has detected a Memory uncorrectable error.

May also be shown as 806f010c2013ffff or 0x806f010c2013ffff

Severity: Error

Alert Category: Critical - Memory

Serviceable: Yes

CIM Information: **Prefix:** PLAT and **ID:** 0138

SNMP Trap ID: 41

Automatically notify Support: Yes

User response: This is a UEFI detected event. The UEFI diagnostic code for this event can be found in the logged IMM message text. Please refer to the UEFI diagnostic code in the "UEFI diagnostic code" section of the Information Center for the appropriate user response.

806f010c-2014ffff Uncorrectable error detected for [PhysicalMemoryElementName] on Subsystem [MemoryElementName].

Explanation: This message is for the use case when an implementation has detected a Memory uncorrectable error.

May also be shown as 806f010c2014ffff or 0x806f010c2014ffff

Severity: Error

Alert Category: Critical - Memory

Serviceable: Yes

CIM Information: **Prefix:** PLAT and **ID:** 0138

SNMP Trap ID: 41

Automatically notify Support: Yes

User response: This is a UEFI detected event. The UEFI diagnostic code for this event can be found in the logged IMM message text. Please refer to the UEFI diagnostic code in the "UEFI diagnostic code" section of the Information Center for the appropriate user response.

806f010c-2015ffff Uncorrectable error detected for [PhysicalMemoryElementName] on Subsystem [MemoryElementName].

Explanation: This message is for the use case when an implementation has detected a Memory uncorrectable error.

May also be shown as 806f010c2015ffff or 0x806f010c2015ffff

Severity: Error

Alert Category: Critical - Memory

Serviceable: Yes

CIM Information: **Prefix:** PLAT and **ID:** 0138

SNMP Trap ID: 41

Automatically notify Support: Yes

User response: This is a UEFI detected event. The UEFI diagnostic code for this event can be found in the logged IMM message text. Please refer to the UEFI diagnostic code in the "UEFI diagnostic code" section of the Information Center for the appropriate user response.

806f010c-2016ffff Uncorrectable error detected for [PhysicalMemoryElementName] on Subsystem [MemoryElementName].

Explanation: This message is for the use case when an implementation has detected a Memory uncorrectable error.

May also be shown as 806f010c2016ffff or 0x806f010c2016ffff

Severity: Error

Alert Category: Critical - Memory

Serviceable: Yes

CIM Information: **Prefix:** PLAT and **ID:** 0138

SNMP Trap ID: 41

Automatically notify Support: Yes

User response: This is a UEFI detected event. The UEFI diagnostic code for this event can be found in the logged IMM message text. Please refer to the UEFI diagnostic code in the "UEFI diagnostic code" section of the Information Center for the appropriate user response.

806f010c-2017ffff Uncorrectable error detected for [PhysicalMemoryElementName] on Subsystem [MemoryElementName].

Explanation: This message is for the use case when an implementation has detected a Memory uncorrectable error.

May also be shown as 806f010c2017ffff or 0x806f010c2017ffff

Severity: Error

Alert Category: Critical - Memory

Serviceable: Yes

CIM Information: **Prefix:** PLAT and **ID:** 0138

SNMP Trap ID: 41

Automatically notify Support: Yes

User response: This is a UEFI detected event. The UEFI diagnostic code for this event can be found in the logged IMM message text. Please refer to the UEFI diagnostic code in the "UEFI diagnostic code" section of the Information Center for the appropriate user response.

806f010c-2018ffff Uncorrectable error detected for [PhysicalMemoryElementName] on Subsystem [MemoryElementName].

Explanation: This message is for the use case when an implementation has detected a Memory uncorrectable error.

May also be shown as 806f010c2018ffff or 0x806f010c2018ffff

Severity: Error

Alert Category: Critical - Memory

Serviceable: Yes

CIM Information: **Prefix:** PLAT and **ID:** 0138

SNMP Trap ID: 41

Automatically notify Support: Yes

User response: This is a UEFI detected event. The UEFI diagnostic code for this event can be found in the logged IMM message text. Please refer to the UEFI diagnostic code in the "UEFI diagnostic code" section of the Information Center for the appropriate user response.

806f010c-2019ffff Uncorrectable error detected for [PhysicalMemoryElementName] on Subsystem [MemoryElementName].

Explanation: This message is for the use case when an implementation has detected a Memory uncorrectable error.

May also be shown as 806f010c2019ffff or 0x806f010c2019ffff

Severity: Error

Alert Category: Critical - Memory

Serviceable: Yes

CIM Information: **Prefix:** PLAT and **ID:** 0138

SNMP Trap ID: 41

Automatically notify Support: Yes

User response: This is a UEFI detected event. The UEFI diagnostic code for this event can be found in the logged IMM message text. Please refer to the UEFI diagnostic code in the "UEFI diagnostic code" section of the Information Center for the appropriate user response.

806f010c-201affff Uncorrectable error detected for [PhysicalMemoryElementName] on Subsystem [MemoryElementName].

Explanation: This message is for the use case when an implementation has detected a Memory uncorrectable error.

May also be shown as 806f010c201affff or 0x806f010c201affff

Severity: Error

Alert Category: Critical - Memory

Serviceable: Yes

CIM Information: **Prefix:** PLAT and **ID:** 0138

SNMP Trap ID: 41

Automatically notify Support: Yes

User response: This is a UEFI detected event. The UEFI diagnostic code for this event can be found in the logged IMM message text. Please refer to the UEFI diagnostic code in the "UEFI diagnostic code" section of the Information Center for the appropriate user response.

806f010c-201bffff Uncorrectable error detected for [PhysicalMemoryElementName] on Subsystem [MemoryElementName].

Explanation: This message is for the use case when an implementation has detected a Memory uncorrectable error.

May also be shown as 806f010c201bffff or 0x806f010c201bffff

Severity: Error

Alert Category: Critical - Memory

Serviceable: Yes

CIM Information: **Prefix:** PLAT and **ID:** 0138

SNMP Trap ID: 41

Automatically notify Support: Yes

User response: This is a UEFI detected event. The UEFI diagnostic code for this event can be found in the logged IMM message text. Please refer to the UEFI diagnostic code in the "UEFI diagnostic code" section of the Information Center for the appropriate user response.

806f010c-201cffff Uncorrectable error detected for [PhysicalMemoryElementName] on Subsystem [MemoryElementName].

Explanation: This message is for the use case when an implementation has detected a Memory uncorrectable error.

May also be shown as 806f010c201cffff or 0x806f010c201cffff

Severity: Error

Alert Category: Critical - Memory

Serviceable: Yes

CIM Information: **Prefix:** PLAT and **ID:** 0138

SNMP Trap ID: 41

Automatically notify Support: Yes

User response: This is a UEFI detected event. The UEFI diagnostic code for this event can be found in the logged IMM message text. Please refer to the UEFI diagnostic code in the "UEFI diagnostic code" section of the Information Center for the appropriate user response.

806f010c-201dffff Uncorrectable error detected for [PhysicalMemoryElementName] on Subsystem [MemoryElementName].

Explanation: This message is for the use case when an implementation has detected a Memory uncorrectable error.

May also be shown as 806f010c201dffff or 0x806f010c201dffff

Severity: Error

Alert Category: Critical - Memory

Serviceable: Yes

CIM Information: **Prefix:** PLAT and **ID:** 0138

SNMP Trap ID: 41

Automatically notify Support: Yes

User response: This is a UEFI detected event. The UEFI diagnostic code for this event can be found in the logged IMM message text. Please refer to the UEFI diagnostic code in the "UEFI diagnostic code" section of the Information Center for the appropriate user response.

806f010c-201effff Uncorrectable error detected for [PhysicalMemoryElementName] on Subsystem [MemoryElementName].

Explanation: This message is for the use case when an implementation has detected a Memory uncorrectable error.

May also be shown as 806f010c201effff or 0x806f010c201effff

Severity: Error

Alert Category: Critical - Memory

Serviceable: Yes

CIM Information: **Prefix:** PLAT and **ID:** 0138

SNMP Trap ID: 41

Automatically notify Support: Yes

User response: This is a UEFI detected event. The UEFI diagnostic code for this event can be found in the logged IMM message text. Please refer to the UEFI diagnostic code in the "UEFI diagnostic code" section of the Information Center for the appropriate user response.

806f010c-201fffff Uncorrectable error detected for [PhysicalMemoryElementName] on Subsystem [MemoryElementName].

Explanation: This message is for the use case when an implementation has detected a Memory uncorrectable error.

May also be shown as 806f010c201fffff or 0x806f010c201fffff

Severity: Error

Alert Category: Critical - Memory

Serviceable: Yes

CIM Information: **Prefix:** PLAT and **ID:** 0138

SNMP Trap ID: 41

Automatically notify Support: Yes

User response: This is a UEFI detected event. The UEFI diagnostic code for this event can be found in the logged IMM message text. Please refer to the UEFI diagnostic code in the "UEFI diagnostic code" section of the Information Center for the appropriate user response.

806f010c-2020ffff Uncorrectable error detected for [PhysicalMemoryElementName] on Subsystem [MemoryElementName].

Explanation: This message is for the use case when an implementation has detected a Memory uncorrectable error.

May also be shown as 806f010c2020ffff or 0x806f010c2020ffff

Severity: Error

Alert Category: Critical - Memory

Serviceable: Yes

CIM Information: **Prefix:** PLAT and **ID:** 0138

SNMP Trap ID: 41

Automatically notify Support: Yes

User response: This is a UEFI detected event. The UEFI diagnostic code for this event can be found in the logged IMM message text. Please refer to the UEFI diagnostic code in the "UEFI diagnostic code" section of the Information Center for the appropriate user response.

806f010c-2021ffff Uncorrectable error detected for [PhysicalMemoryElementName] on Subsystem [MemoryElementName].

Explanation: This message is for the use case when an implementation has detected a Memory uncorrectable error.

May also be shown as 806f010c2021ffff or 0x806f010c2021ffff

Severity: Error

Alert Category: Critical - Memory

Serviceable: Yes

CIM Information: **Prefix:** PLAT and **ID:** 0138

SNMP Trap ID: 41

Automatically notify Support: Yes

User response: This is a UEFI detected event. The UEFI diagnostic code for this event can be found in the logged IMM message text. Please refer to the UEFI diagnostic code in the "UEFI diagnostic code" section of the Information Center for the appropriate user response.

806f010c-2022ffff Uncorrectable error detected for [PhysicalMemoryElementName] on Subsystem [MemoryElementName].

Explanation: This message is for the use case when an implementation has detected a Memory uncorrectable error.

May also be shown as 806f010c2022ffff or 0x806f010c2022ffff

Severity: Error

Alert Category: Critical - Memory

Serviceable: Yes

CIM Information: **Prefix:** PLAT and **ID:** 0138

SNMP Trap ID: 41

Automatically notify Support: Yes

User response: This is a UEFI detected event. The UEFI diagnostic code for this event can be found in the logged IMM message text. Please refer to the UEFI diagnostic code in the "UEFI diagnostic code" section of the Information Center for the appropriate user response.

806f010c-2023ffff Uncorrectable error detected for [PhysicalMemoryElementName] on Subsystem [MemoryElementName].

Explanation: This message is for the use case when an implementation has detected a Memory uncorrectable error.

May also be shown as 806f010c2023ffff or 0x806f010c2023ffff

Severity: Error

Alert Category: Critical - Memory

Serviceable: Yes

CIM Information: **Prefix:** PLAT and **ID:** 0138

SNMP Trap ID: 41

Automatically notify Support: Yes

User response: This is a UEFI detected event. The UEFI diagnostic code for this event can be found in the logged IMM message text. Please refer to the UEFI diagnostic code in the "UEFI diagnostic code" section of the Information Center for the appropriate user response.

806f010c-2024ffff Uncorrectable error detected for [PhysicalMemoryElementName] on Subsystem [MemoryElementName].

Explanation: This message is for the use case when an implementation has detected a Memory uncorrectable error.

May also be shown as 806f010c2024ffff or 0x806f010c2024ffff

Severity: Error

Alert Category: Critical - Memory

Serviceable: Yes

CIM Information: **Prefix:** PLAT and **ID:** 0138

SNMP Trap ID: 41

Automatically notify Support: Yes

User response: This is a UEFI detected event. The UEFI diagnostic code for this event can be found in the logged IMM message text. Please refer to the UEFI diagnostic code in the "UEFI diagnostic code" section of the Information Center for the appropriate user response.

806f010c-2025ffff Uncorrectable error detected for [PhysicalMemoryElementName] on Subsystem [MemoryElementName].

Explanation: This message is for the use case when an implementation has detected a Memory uncorrectable error.

May also be shown as 806f010c2025ffff or 0x806f010c2025ffff

Severity: Error

Alert Category: Critical - Memory

Serviceable: Yes

CIM Information: **Prefix:** PLAT and **ID:** 0138

SNMP Trap ID: 41

Automatically notify Support: Yes

User response: This is a UEFI detected event. The UEFI diagnostic code for this event can be found in the logged IMM message text. Please refer to the UEFI diagnostic code in the "UEFI diagnostic code" section of the Information Center for the appropriate user response.

806f010c-2026ffff Uncorrectable error detected for [PhysicalMemoryElementName] on Subsystem [MemoryElementName].

Explanation: This message is for the use case when an implementation has detected a Memory uncorrectable error.

May also be shown as 806f010c2026ffff or 0x806f010c2026ffff

Severity: Error

Alert Category: Critical - Memory

Serviceable: Yes

CIM Information: **Prefix:** PLAT and **ID:** 0138

SNMP Trap ID: 41

Automatically notify Support: Yes

User response: This is a UEFI detected event. The UEFI diagnostic code for this event can be found in the logged IMM message text. Please refer to the UEFI diagnostic code in the "UEFI diagnostic code" section of the Information Center for the appropriate user response.

806f010c-2027ffff Uncorrectable error detected for [PhysicalMemoryElementName] on Subsystem [MemoryElementName].

Explanation: This message is for the use case when an implementation has detected a Memory uncorrectable error.

May also be shown as 806f010c2027ffff or 0x806f010c2027ffff

Severity: Error

Alert Category: Critical - Memory

Serviceable: Yes

CIM Information: **Prefix:** PLAT and **ID:** 0138

SNMP Trap ID: 41

Automatically notify Support: Yes

User response: This is a UEFI detected event. The UEFI diagnostic code for this event can be found in the logged IMM message text. Please refer to the UEFI diagnostic code in the "UEFI diagnostic code" section of the Information Center for the appropriate user response.

806f010c-2028ffff Uncorrectable error detected for [PhysicalMemoryElementName] on Subsystem [MemoryElementName].

Explanation: This message is for the use case when an implementation has detected a Memory uncorrectable error.

May also be shown as 806f010c2028ffff or 0x806f010c2028ffff

Severity: Error

Alert Category: Critical - Memory

Serviceable: Yes

CIM Information: **Prefix:** PLAT and **ID:** 0138

SNMP Trap ID: 41

Automatically notify Support: Yes

User response: This is a UEFI detected event. The UEFI diagnostic code for this event can be found in the logged IMM message text. Please refer to the UEFI diagnostic code in the "UEFI diagnostic code" section of the Information Center for the appropriate user response.

806f010c-2029ffff Uncorrectable error detected for [PhysicalMemoryElementName] on Subsystem [MemoryElementName].

Explanation: This message is for the use case when an implementation has detected a Memory uncorrectable error.

May also be shown as 806f010c2029ffff or 0x806f010c2029ffff

Severity: Error

Alert Category: Critical - Memory

Serviceable: Yes

CIM Information: **Prefix:** PLAT and **ID:** 0138

SNMP Trap ID: 41

Automatically notify Support: Yes

User response: This is a UEFI detected event. The UEFI diagnostic code for this event can be found in the logged IMM message text. Please refer to the UEFI diagnostic code in the "UEFI diagnostic code" section of the Information Center for the appropriate user response.

806f010c-202affff Uncorrectable error detected for [PhysicalMemoryElementName] on Subsystem [MemoryElementName].

Explanation: This message is for the use case when an implementation has detected a Memory uncorrectable error.

May also be shown as 806f010c202affff or 0x806f010c202affff

Severity: Error

Alert Category: Critical - Memory

Serviceable: Yes

CIM Information: **Prefix:** PLAT and **ID:** 0138

SNMP Trap ID: 41

Automatically notify Support: Yes

User response: This is a UEFI detected event. The UEFI diagnostic code for this event can be found in the logged IMM message text. Please refer to the UEFI diagnostic code in the "UEFI diagnostic code" section of the Information Center for the appropriate user response.

806f010c-202bffff Uncorrectable error detected for [PhysicalMemoryElementName] on Subsystem [MemoryElementName].

Explanation: This message is for the use case when an implementation has detected a Memory uncorrectable error.

May also be shown as 806f010c202bffff or 0x806f010c202bffff

Severity: Error

Alert Category: Critical - Memory

Serviceable: Yes

CIM Information: **Prefix:** PLAT and **ID:** 0138

SNMP Trap ID: 41

Automatically notify Support: Yes

User response: This is a UEFI detected event. The UEFI diagnostic code for this event can be found in the logged IMM message text. Please refer to the UEFI diagnostic code in the "UEFI diagnostic code" section of the Information Center for the appropriate user response.

806f010c-202cffff Uncorrectable error detected for [PhysicalMemoryElementName] on Subsystem [MemoryElementName].

Explanation: This message is for the use case when an implementation has detected a Memory uncorrectable error.

May also be shown as 806f010c202cffff or 0x806f010c202cffff

Severity: Error

Alert Category: Critical - Memory

Serviceable: Yes

CIM Information: **Prefix:** PLAT and **ID:** 0138

SNMP Trap ID: 41

Automatically notify Support: Yes

User response: This is a UEFI detected event. The UEFI diagnostic code for this event can be found in the logged IMM message text. Please refer to the UEFI diagnostic code in the "UEFI diagnostic code" section of the Information Center for the appropriate user response.

806f010c-202dffff Uncorrectable error detected for [PhysicalMemoryElementName] on Subsystem [MemoryElementName].

Explanation: This message is for the use case when an implementation has detected a Memory uncorrectable error.

May also be shown as 806f010c202dffff or 0x806f010c202dffff

Severity: Error

Alert Category: Critical - Memory

Serviceable: Yes

CIM Information: **Prefix:** PLAT and **ID:** 0138

SNMP Trap ID: 41

Automatically notify Support: Yes

User response: This is a UEFI detected event. The UEFI diagnostic code for this event can be found in the logged IMM message text. Please refer to the UEFI diagnostic code in the "UEFI diagnostic code" section of the Information Center for the appropriate user response.

806f010c-202effff Uncorrectable error detected for [PhysicalMemoryElementName] on Subsystem [MemoryElementName].

Explanation: This message is for the use case when an implementation has detected a Memory uncorrectable error.

May also be shown as 806f010c202effff or 0x806f010c202effff

Severity: Error

Alert Category: Critical - Memory

Serviceable: Yes

CIM Information: **Prefix:** PLAT and **ID:** 0138

SNMP Trap ID: 41

Automatically notify Support: Yes

User response: This is a UEFI detected event. The UEFI diagnostic code for this event can be found in the logged IMM message text. Please refer to the UEFI diagnostic code in the "UEFI diagnostic code" section of the Information Center for the appropriate user response.

806f010c-202fffff Uncorrectable error detected for [PhysicalMemoryElementName] on Subsystem [MemoryElementName].

Explanation: This message is for the use case when an implementation has detected a Memory uncorrectable error.

May also be shown as 806f010c202fffff or 0x806f010c202fffff

Severity: Error

Alert Category: Critical - Memory

Serviceable: Yes

CIM Information: **Prefix:** PLAT and **ID:** 0138

SNMP Trap ID: 41

Automatically notify Support: Yes

User response: This is a UEFI detected event. The UEFI diagnostic code for this event can be found in the logged IMM message text. Please refer to the UEFI diagnostic code in the "UEFI diagnostic code" section of the Information Center for the appropriate user response.

806f010c-2030ffff Uncorrectable error detected for [PhysicalMemoryElementName] on Subsystem [MemoryElementName].

Explanation: This message is for the use case when an implementation has detected a Memory uncorrectable error.

May also be shown as 806f010c2030ffff or 0x806f010c2030ffff

Severity: Error

Alert Category: Critical - Memory

Serviceable: Yes

CIM Information: **Prefix:** PLAT and **ID:** 0138

SNMP Trap ID: 41

Automatically notify Support: Yes

User response: This is a UEFI detected event. The UEFI diagnostic code for this event can be found in the logged IMM message text. Please refer to the UEFI diagnostic code in the "UEFI diagnostic code" section of the Information Center for the appropriate user response.

806f010c-2581ffff Uncorrectable error detected for [PhysicalMemoryElementName] on Subsystem [MemoryElementName].

Explanation: This message is for the use case when an implementation has detected a Memory uncorrectable error. All DIMMs. One of the DIMMs.

May also be shown as 806f010c2581ffff or 0x806f010c2581ffff

Severity: Error

Alert Category: Critical - Memory

Serviceable: Yes

CIM Information: **Prefix:** PLAT and **ID:** 0138

SNMP Trap ID: 41

Automatically notify Support: Yes

User response: This is a UEFI detected event. The UEFI diagnostic code for this event can be found in the logged IMM message text. Please refer to the UEFI diagnostic code in the "UEFI diagnostic code" section of the Information Center for the appropriate user response.

806f010d-0400ffff The Drive Drive 0 has been disabled due to a detected fault.

Explanation: The hard disk drive controller has detected a fault in hard disk drive 0. Hard disk drive 0 is now defunct.

May also be shown as 806f010d0400ffff or 0x806f010d0400ffff

Severity: Error

Alert Category: Critical - Hard Disk drive

Serviceable: Yes

CIM Information: **Prefix:** PLAT and **ID:** 0164

SNMP Trap ID: 5

Automatically notify Support: Yes

User response: Complete the following steps until the problem is solved:

1. Check the Support Portal for service bulletins and RETAIN tips related to your drive.
2. Check the Support Portal for firmware updates related to your drive.
3. Replace the drive.
4. Check for any other RAID-related errors.

806f010d-0401ffff The Drive Drive 1 has been disabled due to a detected fault.

Explanation: The hard disk drive controller has detected a fault in hard disk drive 1. Hard disk drive 1 is now defunct.

May also be shown as 806f010d0401ffff or 0x806f010d0401ffff

Severity: Error

Alert Category: Critical - Hard Disk drive

Serviceable: Yes

CIM Information: **Prefix:** PLAT and **ID:** 0164

SNMP Trap ID: 5

Automatically notify Support: Yes

User response: Complete the following steps until the problem is solved:

1. Check the Support Portal for service bulletins and RETAIN tips related to your drive.

2. Check the Support Portal for firmware updates related to your drive.
3. Replace the drive.
4. Check for any other RAID-related errors.

806f010d-0402ffff The Drive Drive 2 has been disabled due to a detected fault.

Explanation: The hard disk drive controller has detected a fault in hard disk drive 2. Hard disk drive 2 is now defunct.

May also be shown as 806f010d0402ffff or 0x806f010d0402ffff

Severity: Error

Alert Category: Critical - Hard Disk drive

Serviceable: Yes

CIM Information: **Prefix:** PLAT and **ID:** 0164

SNMP Trap ID: 5

Automatically notify Support: Yes

User response: Complete the following steps until the problem is solved:
1. Check the Support Portal for service bulletins and RETAIN tips related to your drive.
2. Check the Support Portal for firmware updates related to your drive.
3. Replace the drive.
4. Check for any other RAID related errors.

806f010d-0403ffff The Drive Drive 3 has been disabled due to a detected fault.

Explanation: The hard disk drive controller has detected a fault in hard disk drive 3. Hard disk drive 3 is now defunct.

May also be shown as 806f010d0403ffff or 0x806f010d0403ffff

Severity: Error

Alert Category: Critical - Hard Disk drive

Serviceable: Yes

CIM Information: **Prefix:** PLAT and **ID:** 0164

SNMP Trap ID: 5

Automatically notify Support: Yes

User response: Complete the following steps until the problem is solved:
1. Check the Support Portal for service bulletins and RETAIN tips related to your drive.
2. Check the Support Portal for firmware updates related to your drive.
3. Replace the drive.
4. Check for any other RAID-related errors.

806f010d-0404ffff The Drive Drive 4 has been disabled due to a detected fault.

Explanation: The hard disk drive controller has detected a fault in hard disk drive 4. Hard disk drive 4 is now defunct.

May also be shown as 806f010d0404ffff or 0x806f010d0404ffff

Severity: Error

Alert Category: Critical - Hard Disk drive

Serviceable: Yes

CIM Information: **Prefix:** PLAT and **ID:** 0164

SNMP Trap ID: 5

Automatically notify Support: Yes

User response: Complete the following steps until the problem is solved:

1. Check the Support Portal for service bulletins and RETAIN tips related to your drive.
2. Check the Support Portal for firmware updates related to your drive.
3. Replace the drive.
4. Check for any other RAID-related errors.

806f010d-0405ffff The Drive Drive 5 has been disabled due to a detected fault.

Explanation: The hard disk drive controller has detected a fault in hard disk drive 5. Hard disk drive 5 is now defunct.

May also be shown as 806f010d0405ffff or 0x806f010d0405ffff

Severity: Error

Alert Category: Critical - Hard Disk drive

Serviceable: Yes

CIM Information: **Prefix:** PLAT and **ID:** 0164

SNMP Trap ID: 5

Automatically notify Support: Yes

User response: Complete the following steps until the problem is solved:

1. Check the Support Portal for service bulletins and RETAIN tips related to your drive.
2. Check the Support Portal for firmware updates related to your drive.
3. Replace the drive.
4. Check for any other RAID-related errors.

806f010d-0406ffff The Drive Drive 6 has been disabled due to a detected fault.

Explanation: The hard disk drive controller has detected a fault in hard disk drive 6. Hard disk drive 6 is now defunct.

May also be shown as 806f010d0406ffff or 0x806f010d0406ffff

Severity: Error

Alert Category: Critical - Hard Disk drive

Serviceable: Yes

CIM Information: **Prefix:** PLAT and **ID:** 0164

SNMP Trap ID: 5

Automatically notify Support: Yes

User response: Complete the following steps until the problem is solved:

1. Check the Support Portal for service bulletins and RETAIN tips related to your drive.
2. Check the Support Portal for firmware updates related to your drive.
3. Replace the drive.
4. Check for any other RAID-related errors.

806f010d-0407ffff The Drive Drive 7 has been disabled due to a detected fault.

Explanation: The hard disk drive controller has detected a fault in hard disk drive 7. Hard disk drive 7 is now defunct.

May also be shown as 806f010d0407ffff or 0x806f010d0407ffff

Severity: Error

Alert Category: Critical - Hard Disk drive

Serviceable: Yes

CIM Information: **Prefix:** PLAT and **ID:** 0164

SNMP Trap ID: 5

Automatically notify Support: Yes

User response: Complete the following steps until the problem is solved:
1. Check the Support Portal for service bulletins and RETAIN tips related to your drive.
2. Check the Support Portal for firmware updates related to your drive.
3. Replace the drive.
4. Check for any other RAID-related errors.

806f010f-2201ffff The System [ComputerSystemElementName] encountered a firmware hang.

Explanation: This message is for the use case when an implementation has detected a System Firmware Hang.

May also be shown as 806f010f2201ffff or 0x806f010f2201ffff

Severity: Error

Alert Category: System - Boot failure

Serviceable: Yes

CIM Information: **Prefix:** PLAT and **ID:** 0186

SNMP Trap ID: 25

Automatically notify Support: No

User response: This is a UEFI detected event. The UEFI diagnostic code for this event can be found in the logged IMM message text. Please refer to the UEFI diagnostic code in the "UEFI diagnostic code" section of the Info Center for the appropriate user response.

806f011b-0c01ffff The connector LightPath has encountered a configuration error.

Explanation: The light path LED card is not detected.

May also be shown as 806f011b0c01ffff or 0x806f011b0c01ffff

Severity: Error

Alert Category: Critical - Other

Serviceable: Yes

CIM Information: **Prefix:** PLAT and **ID:** 0266

SNMP Trap ID: 50

Automatically notify Support: Yes

User response: Complete the following steps until the problem is solved:
1. Make sure that the cable from the light path LED card to the system board is securely connected.
2. Replace the light path diagnostics panel.

806f011b-1f03ffff The connector [PhysicalConnectorElementName] has encountered a configuration error.

Explanation: The connections of the SAS cable between the SAS backplane and the planar are not complete.

May also be shown as 806f011b1f03ffff or 0x806f011b1f03ffff

Severity: Error

Alert Category: Critical - Other

Serviceable: Yes

CIM Information: **Prefix:** PLAT and **ID:** 0266

SNMP Trap ID: 50

Automatically notify Support: Yes

User response:
1. Check the connections of the SAS cable between the disk and the backplane
2. (Trained service personnel only).

806f011b-1f04ffff The connector [PhysicalConnectorElementName] has encountered a configuration error.

Explanation: The connections of the SAS cable between the SAS backplane and the planar are not complete.

May also be shown as 806f011b1f04ffff or 0x806f011b1f04ffff

Severity: Error

Alert Category: Critical - Other

Serviceable: Yes

CIM Information: **Prefix:** PLAT and **ID:** 0266

SNMP Trap ID: 50

Automatically notify Support: Yes

User response:
1. Check the connections of the SAS cable between the disk and the backplane
2. (Trained service personnel only).

806f0123-2101ffff Reboot of system [ComputerSystemElementName] initiated by IPMI Watchdog.

Explanation: The IPMI watchdog timer has expired. The compute node has restarted.

May also be shown as 806f01232101ffff or 0x806f01232101ffff

Severity: Info

Alert Category: System - Other

Serviceable: No

CIM Information: **Prefix:** PLAT and **ID:** 0370

SNMP Trap ID:

Automatically notify Support: No

User response: Information only; no action is required.

806f0207-0301ffff CPU 1 has Failed with FRB1/BIST condition.

Explanation: This message is for the use case when an implementation has detected a Processor Failed - FRB1/BIST condition.

May also be shown as 806f02070301ffff or 0x806f02070301ffff

Severity: Error

Alert Category: Critical - CPU

Serviceable: Yes

CIM Information: **Prefix:** PLAT and **ID:** 0044

SNMP Trap ID: 40

Automatically notify Support: No

User response: This is a UEFI detected event. The UEFI diagnostic code for this event can be found in the logged IMM message text. Please refer to the UEFI diagnostic code in the "UEFI diagnostic code" section of the Information Center for the appropriate user response.

806f0207-0302ffff CPU 2 has Failed with FRB1/BIST condition.

Explanation: This message is for the use case when an implementation has detected a Processor Failed - FRB1/BIST condition.

May also be shown as 806f02070302ffff or 0x806f02070302ffff

Severity: Error

Alert Category: Critical - CPU

Serviceable: Yes

CIM Information: **Prefix:** PLAT and **ID:** 0044

SNMP Trap ID: 40

Automatically notify Support: Yes

User response: This is a UEFI detected event. The UEFI diagnostic code for this event can be found in the logged IMM message text. Please refer to the UEFI diagnostic code in the "UEFI diagnostic code" section of the Information Center for the appropriate user response.

806f0207-0303ffff CPU 3 has Failed with FRB1/BIST condition.

Explanation: This message is for the use case when an implementation has detected a Processor Failed - FRB1/BIST condition.

May also be shown as 806f02070303ffff or 0x806f02070303ffff

Severity: Error

Alert Category: Critical - CPU

Serviceable: Yes

CIM Information: **Prefix:** PLAT and **ID:** 0044

SNMP Trap ID: 40

Automatically notify Support: No

User response: This is a UEFI detected event. The UEFI diagnostic code for this event can be found in the logged IMM message text. Please refer to the UEFI diagnostic code in the "UEFI diagnostic code" section of the Information Center for the appropriate user response.

806f0207-0304ffff CPU 4 has Failed with FRB1/BIST condition.

Explanation: This message is for the use case when an implementation has detected a Processor Failed - FRB1/BIST condition.

May also be shown as 806f02070304ffff or 0x806f02070304ffff

Severity: Error

Alert Category: Critical - CPU

Serviceable: Yes

CIM Information: **Prefix:** PLAT and **ID:** 0044

SNMP Trap ID: 40

Automatically notify Support: No

User response: This is a UEFI detected event. The UEFI diagnostic code for this event can be found in the logged IMM message text. Please refer to the UEFI diagnostic code in the "UEFI diagnostic code" section of the Information Center for the appropriate user response.

806f0207-2584ffff [ProcessorElementName] has Failed with FRB1/BIST condition.

Explanation: This message is for the use case when an implementation has detected a Processor Failed - FRB1/BIST condition. All CPUs. One of CPUs.

May also be shown as 806f02072584ffff or 0x806f02072584ffff

Severity: Error

Alert Category: Critical - CPU

Serviceable: Yes

CIM Information: **Prefix:** PLAT and **ID:** 0044

SNMP Trap ID: 40

Automatically notify Support: No

User response: This is a UEFI detected event. The UEFI diagnostic code for this event can be found in the logged IMM message text. Please refer to the UEFI diagnostic code in the "UEFI diagnostic code" section of the Information Center for the appropriate user response.

806f020d-0400ffff Failure Predicted on drive [StorageVolumeElementName] for array [ComputerSystemElementName].

Explanation: Failure predicted (PFA) on the hard drive.

May also be shown as 806f020d0400ffff or 0x806f020d0400ffff

Severity: Warning

Alert Category: System - Predicted Failure

Serviceable: Yes

CIM Information: **Prefix:** PLAT and **ID:** 0168

SNMP Trap ID: 27

Automatically notify Support: Yes

User response: Replace the hard disk drive at the next maintenance period.

806f020d-0401ffff Failure Predicted on drive [StorageVolumeElementName] for array [ComputerSystemElementName].

Explanation: Failure predicted (PFA) on the hard drive.

May also be shown as 806f020d0401ffff or 0x806f020d0401ffff

Severity: Warning

Alert Category: System - Predicted Failure

Serviceable: Yes

CIM Information: **Prefix:** PLAT and **ID:** 0168

SNMP Trap ID: 27

Automatically notify Support: Yes

User response: Replace the hard disk drive at the next maintenance period.

806f020d-0402ffff Failure Predicted on drive [StorageVolumeElementName] for array [ComputerSystemElementName].

Explanation: Failure predicted (PFA) on the hard drive.

May also be shown as 806f020d0402ffff or 0x806f020d0402ffff

Severity: Warning

Alert Category: System - Predicted Failure

Serviceable: Yes

CIM Information: **Prefix:** PLAT and **ID:** 0168

SNMP Trap ID: 27

Automatically notify Support: Yes

User response: Replace the hard disk drive at the next maintenance period.

806f020d-0403ffff Failure Predicted on drive [StorageVolumeElementName] for array [ComputerSystemElementName].

Explanation: Failure predicted (PFA) on the hard drive.

May also be shown as 806f020d0403ffff or 0x806f020d0403ffff

Severity: Warning

Alert Category: System - Predicted Failure

Serviceable: Yes

CIM Information: **Prefix:** PLAT and **ID:** 0168

SNMP Trap ID: 27

Automatically notify Support: Yes

User response: Replace the hard disk drive at the next maintenance period.

806f020d-0404ffff Failure Predicted on drive [StorageVolumeElementName] for array [ComputerSystemElementName].

Explanation: Failure predicted (PFA) on the hard drive.

May also be shown as 806f020d0404ffff or 0x806f020d0404ffff

Severity: Warning

Alert Category: System - Predicted Failure

Serviceable: Yes

CIM Information: **Prefix:** PLAT and **ID:** 0168

SNMP Trap ID: 27

Automatically notify Support: Yes

User response: Replace the hard disk drive at the next maintenance period.

806f020d-0405ffff Failure Predicted on drive [StorageVolumeElementName] for array [ComputerSystemElementName].

Explanation: Failure predicted (PFA) on the hard drive.

May also be shown as 806f020d0405ffff or 0x806f020d0405ffff

Severity: Warning

Alert Category: System - Predicted Failure

Serviceable: Yes

CIM Information: **Prefix:** PLAT and **ID:** 0168

SNMP Trap ID: 27

Automatically notify Support: Yes

User response: Replace the hard disk drive at the next maintenance period.

806f020d-0406ffff Failure Predicted on drive [StorageVolumeElementName] for array [ComputerSystemElementName].

Explanation: Failure predicted (PFA) on the hard drive.

May also be shown as 806f020d0406ffff or 0x806f020d0406ffff

Severity: Warning

Alert Category: System - Predicted Failure

Serviceable: Yes

CIM Information: **Prefix:** PLAT and **ID:** 0168

SNMP Trap ID: 27

Automatically notify Support: Yes

User response: Replace the hard disk drive at the next maintenance period.

806f020d-0407ffff Failure Predicted on drive [StorageVolumeElementName] for array [ComputerSystemElementName].

Explanation: Failure predicted (PFA) on the hard drive.

May also be shown as 806f020d0407ffff or 0x806f020d0407ffff

Severity: Warning

Alert Category: System - Predicted Failure

Serviceable: Yes

CIM Information: **Prefix:** PLAT and **ID:** 0168

SNMP Trap ID: 27

Automatically notify Support: Yes

User response: Replace the hard disk drive at the next maintenance period.

806f0223-2101ffff Powering off system [ComputerSystemElementName] initiated by IPMI Watchdog.

Explanation: The IPMI watchdog timer has expired. The compute node has been powered off.

May also be shown as 806f02232101ffff or 0x806f02232101ffff

Severity: Info

Alert Category: System - Other

Serviceable: No

CIM Information: **Prefix:** PLAT and **ID:** 0372

SNMP Trap ID:

Automatically notify Support: No

User response: Information only; no action is required.

806f0225-1f05ffff LOM1 has been disabled.

Explanation: This message indicates the LAN On Motherboard (LOM) 1 is Disabled.

May also be shown as 806f02251f05ffff or 0x806f02251f05ffff

Severity: Info

Alert Category: System - Other

Serviceable: No

CIM Information: **Prefix:** PLAT and **ID:** 0394

SNMP Trap ID:

Automatically notify Support: No

User response: Information only; no action is required.

806f0225-1f06ffff LOM2 has been disabled.

Explanation: This message indicates the LAN On Motherboard (LOM) 1 is Disabled.

May also be shown as 806f02251f06ffff or 0x806f02251f06ffff

Severity: Info

Alert Category: System - Other

Serviceable: No

CIM Information: **Prefix:** PLAT and **ID:** 0394

SNMP Trap ID:

Automatically notify Support: No

User response: Information only; no action is required.

806f030c-2001ffff Scrub Failure for [PhysicalMemoryElementName] on Subsystem [MemoryElementName].

Explanation: Memory error discovered during boot..(not a runtime error).

May also be shown as 806f030c2001ffff or 0x806f030c2001ffff

Severity: Error

Alert Category: Critical - Memory

Serviceable: Yes

CIM Information: **Prefix:** PLAT and **ID:** 0136

SNMP Trap ID: 41

Automatically notify Support: Yes

User response: This is a UEFI detected event. The UEFI diagnostic code for this event can be found in the logged IMM message text. Please refer to the UEFI diagnostic code in the "UEFI diagnostic code" section of the Information Center for the appropriate user response.

806f030c-2002ffff Scrub Failure for [PhysicalMemoryElementName] on Subsystem [MemoryElementName].

Explanation: Memory error discovered during boot..(not a runtime error).

May also be shown as 806f030c2002ffff or 0x806f030c2002ffff

Severity: Error

Alert Category: Critical - Memory

Serviceable: Yes

CIM Information: **Prefix:** PLAT and **ID:** 0136

SNMP Trap ID: 41

Automatically notify Support: Yes

User response: This is a UEFI detected event. The UEFI diagnostic code for this event can be found in the logged IMM message text. Please refer to the UEFI diagnostic code in the "UEFI diagnostic code" section of the Information Center for the appropriate user response.

806f030c-2003ffff Scrub Failure for [PhysicalMemoryElementName] on Subsystem [MemoryElementName].

Explanation: Memory error discovered during boot..(not a runtime error).

May also be shown as 806f030c2003ffff or 0x806f030c2003ffff

Severity: Error

Alert Category: Critical - Memory

Serviceable: Yes

CIM Information: **Prefix:** PLAT and **ID:** 0136

SNMP Trap ID: 41

Automatically notify Support: Yes

User response: This is a UEFI detected event. The UEFI diagnostic code for this event can be found in the logged IMM message text. Please refer to the UEFI diagnostic code in the "UEFI diagnostic code" section of the Information Center for the appropriate user response.

806f030c-2004ffff Scrub Failure for [PhysicalMemoryElementName] on Subsystem [MemoryElementName].

Explanation: Memory error discovered during boot..(not a runtime error).

May also be shown as 806f030c2004ffff or 0x806f030c2004ffff

Severity: Error

Alert Category: Critical - Memory

Serviceable: Yes

CIM Information: **Prefix:** PLAT and **ID:** 0136

SNMP Trap ID: 41

Automatically notify Support: Yes

User response: This is a UEFI detected event. The UEFI diagnostic code for this event can be found in the logged IMM message text. Please refer to the UEFI diagnostic code in the "UEFI diagnostic code" section of the Information Center for the appropriate user response.

806f030c-2005ffff Scrub Failure for [PhysicalMemoryElementName] on Subsystem [MemoryElementName].

Explanation: Memory error discovered during boot..(not a runtime error).

May also be shown as 806f030c2005ffff or 0x806f030c2005ffff

Severity: Error

Alert Category: Critical - Memory

Serviceable: Yes

CIM Information: **Prefix:** PLAT and **ID:** 0136

SNMP Trap ID: 41

Automatically notify Support: Yes

User response: This is a UEFI detected event. The UEFI diagnostic code for this event can be found in the logged IMM message text. Please refer to the UEFI diagnostic code in the "UEFI diagnostic code" section of the Information Center for the appropriate user response.

806f030c-2006ffff Scrub Failure for [PhysicalMemoryElementName] on Subsystem [MemoryElementName].

Explanation: Memory error discovered during boot..(not a runtime error).

May also be shown as 806f030c2006ffff or 0x806f030c2006ffff

Severity: Error

Alert Category: Critical - Memory

Serviceable: Yes

CIM Information: **Prefix:** PLAT and **ID:** 0136

SNMP Trap ID: 41

Automatically notify Support: Yes

User response: This is a UEFI detected event. The UEFI diagnostic code for this event can be found in the logged IMM message text. Please refer to the UEFI diagnostic code in the "UEFI diagnostic code" section of the Information Center for the appropriate user response.

806f030c-2007ffff Scrub Failure for [PhysicalMemoryElementName] on Subsystem [MemoryElementName].

Explanation: Memory error discovered during boot..(not a runtime error).

May also be shown as 806f030c2007ffff or 0x806f030c2007ffff

Severity: Error

Alert Category: Critical - Memory

Serviceable: Yes

CIM Information: **Prefix:** PLAT and **ID:** 0136

SNMP Trap ID: 41

Automatically notify Support: Yes

User response: This is a UEFI detected event. The UEFI diagnostic code for this event can be found in the logged IMM message text. Please refer to the UEFI diagnostic code in the "UEFI diagnostic code" section of the Information Center for the appropriate user response.

806f030c-2008ffff Scrub Failure for [PhysicalMemoryElementName] on Subsystem [MemoryElementName].

Explanation: Memory error discovered during boot..(not a runtime error).

May also be shown as 806f030c2008ffff or 0x806f030c2008ffff

Severity: Error

Alert Category: Critical - Memory

Serviceable: Yes

CIM Information: **Prefix:** PLAT and **ID:** 0136

SNMP Trap ID: 41

Automatically notify Support: Yes

User response: This is a UEFI detected event. The UEFI diagnostic code for this event can be found in the logged IMM message text. Please refer to the UEFI diagnostic code in the "UEFI diagnostic code" section of the Information Center for the appropriate user response.

806f030c-2009ffff Scrub Failure for [PhysicalMemoryElementName] on Subsystem [MemoryElementName].

Explanation: Memory error discovered during boot..(not a runtime error).

May also be shown as 806f030c2009ffff or 0x806f030c2009ffff

Severity: Error

Alert Category: Critical - Memory

Serviceable: Yes

CIM Information: **Prefix:** PLAT and **ID:** 0136

SNMP Trap ID: 41

Automatically notify Support: Yes

User response: This is a UEFI detected event. The UEFI diagnostic code for this event can be found in the logged IMM message text. Please refer to the UEFI diagnostic code in the "UEFI diagnostic code" section of the Information Center for the appropriate user response.

806f030c-200affff Scrub Failure for [PhysicalMemoryElementName] on Subsystem [MemoryElementName].

Explanation: Memory error discovered during boot..(not a runtime error).

May also be shown as 806f030c200affff or 0x806f030c200affff

Severity: Error

Alert Category: Critical - Memory

Serviceable: Yes

CIM Information: **Prefix:** PLAT and **ID:** 0136

SNMP Trap ID: 41

Automatically notify Support: Yes

User response: This is a UEFI detected event. The UEFI diagnostic code for this event can be found in the logged IMM message text. Please refer to the UEFI diagnostic code in the "UEFI diagnostic code" section of the Information Center for the appropriate user response.

806f030c-200bffff Scrub Failure for [PhysicalMemoryElementName] on Subsystem [MemoryElementName].

Explanation: Memory error discovered during boot..(not a runtime error).

May also be shown as 806f030c200bffff or 0x806f030c200bffff

Severity: Error

Alert Category: Critical - Memory

Serviceable: Yes

CIM Information: **Prefix:** PLAT and **ID:** 0136

SNMP Trap ID: 41

Automatically notify Support: Yes

User response: This is a UEFI detected event. The UEFI diagnostic code for this event can be found in the logged IMM message text. Please refer to the UEFI diagnostic code in the "UEFI diagnostic code" section of the Information Center for the appropriate user response.

806f030c-200cffff Scrub Failure for [PhysicalMemoryElementName] on Subsystem [MemoryElementName].

Explanation: Memory error discovered during boot..(not a runtime error).

May also be shown as 806f030c200cffff or 0x806f030c200cffff

Severity: Error

Alert Category: Critical - Memory

Serviceable: Yes

CIM Information: **Prefix:** PLAT and **ID:** 0136

SNMP Trap ID: 41

Automatically notify Support: Yes

User response: This is a UEFI detected event. The UEFI diagnostic code for this event can be found in the logged IMM message text. Please refer to the UEFI diagnostic code in the "UEFI diagnostic code" section of the Information Center for the appropriate user response.

806f030c-200dffff Scrub Failure for [PhysicalMemoryElementName] on Subsystem [MemoryElementName].

Explanation: Memory error discovered during boot..(not a runtime error).

May also be shown as 806f030c200dffff or 0x806f030c200dffff

Severity: Error

Alert Category: Critical - Memory

Serviceable: Yes

CIM Information: **Prefix:** PLAT and **ID:** 0136

SNMP Trap ID: 41

Automatically notify Support: Yes

User response: This is a UEFI detected event. The UEFI diagnostic code for this event can be found in the logged IMM message text. Please refer to the UEFI diagnostic code in the "UEFI diagnostic code" section of the Information Center for the appropriate user response.

806f030c-200effff Scrub Failure for [PhysicalMemoryElementName] on Subsystem [MemoryElementName].

Explanation: Memory error discovered during boot..(not a runtime error).

May also be shown as 806f030c200effff or 0x806f030c200effff

Severity: Error

Alert Category: Critical - Memory

Serviceable: Yes

CIM Information: **Prefix:** PLAT and **ID:** 0136

SNMP Trap ID: 41

Automatically notify Support: Yes

User response: This is a UEFI detected event. The UEFI diagnostic code for this event can be found in the logged IMM message text. Please refer to the UEFI diagnostic code in the "UEFI diagnostic code" section of the Information Center for the appropriate user response.

806f030c-200fffff Scrub Failure for [PhysicalMemoryElementName] on Subsystem [MemoryElementName].

Explanation: Memory error discovered during boot..(not a runtime error).

May also be shown as 806f030c200fffff or 0x806f030c200fffff

Severity: Error

Alert Category: Critical - Memory

Serviceable: Yes

CIM Information: **Prefix:** PLAT and **ID:** 0136

SNMP Trap ID: 41

Automatically notify Support: Yes

User response: This is a UEFI detected event. The UEFI diagnostic code for this event can be found in the logged IMM message text. Please refer to the UEFI diagnostic code in the "UEFI diagnostic code" section of the Information Center for the appropriate user response.

806f030c-2010ffff Scrub Failure for [PhysicalMemoryElementName] on Subsystem [MemoryElementName].

Explanation: Memory error discovered during boot..(not a runtime error).

May also be shown as 806f030c2010ffff or 0x806f030c2010ffff

Severity: Error

Alert Category: Critical - Memory

Serviceable: Yes

CIM Information: **Prefix:** PLAT and **ID:** 0136

SNMP Trap ID: 41

Automatically notify Support: Yes

User response: This is a UEFI detected event. The UEFI diagnostic code for this event can be found in the logged IMM message text. Please refer to the UEFI diagnostic code in the "UEFI diagnostic code" section of the Information Center for the appropriate user response.

806f030c-2011ffff Scrub Failure for [PhysicalMemoryElementName] on Subsystem [MemoryElementName].

Explanation: Memory error discovered during boot..(not a runtime error).

May also be shown as 806f030c2011ffff or 0x806f030c2011ffff

Severity: Error

Alert Category: Critical - Memory

Serviceable: Yes

CIM Information: **Prefix:** PLAT and **ID:** 0136

SNMP Trap ID: 41

Automatically notify Support: Yes

User response: This is a UEFI detected event. The UEFI diagnostic code for this event can be found in the logged IMM message text. Please refer to the UEFI diagnostic code in the "UEFI diagnostic code" section of the Information Center for the appropriate user response.

806f030c-2012ffff Scrub Failure for [PhysicalMemoryElementName] on Subsystem [MemoryElementName].

Explanation: Memory error discovered during boot..(not a runtime error).

May also be shown as 806f030c2012ffff or 0x806f030c2012ffff

Severity: Error

Alert Category: Critical - Memory

Serviceable: Yes

CIM Information: **Prefix:** PLAT and **ID:** 0136

SNMP Trap ID: 41

Automatically notify Support: Yes

User response: This is a UEFI detected event. The UEFI diagnostic code for this event can be found in the logged IMM message text. Please refer to the UEFI diagnostic code in the "UEFI diagnostic code" section of the Information Center for the appropriate user response.

806f030c-2013ffff Scrub Failure for [PhysicalMemoryElementName] on Subsystem [MemoryElementName].

Explanation: Memory error discovered during boot..(not a runtime error).

May also be shown as 806f030c2013ffff or 0x806f030c2013ffff

Severity: Error

Alert Category: Critical - Memory

Serviceable: Yes

CIM Information: **Prefix:** PLAT and **ID:** 0136

SNMP Trap ID: 41

Automatically notify Support: Yes

User response: This is a UEFI detected event. The UEFI diagnostic code for this event can be found in the logged IMM message text. Please refer to the UEFI diagnostic code in the "UEFI diagnostic code" section of the Information Center for the appropriate user response.

806f030c-2014ffff Scrub Failure for [PhysicalMemoryElementName] on Subsystem [MemoryElementName].

Explanation: Memory error discovered during boot..(not a runtime error).

May also be shown as 806f030c2014ffff or 0x806f030c2014ffff

Severity: Error

Alert Category: Critical - Memory

Serviceable: Yes

CIM Information: **Prefix:** PLAT and **ID:** 0136

SNMP Trap ID: 41

Automatically notify Support: Yes

User response: This is a UEFI detected event. The UEFI diagnostic code for this event can be found in the logged IMM message text. Please refer to the UEFI diagnostic code in the "UEFI diagnostic code" section of the Information Center for the appropriate user response.

806f030c-2015ffff Scrub Failure for [PhysicalMemoryElementName] on Subsystem [MemoryElementName].

Explanation: Memory error discovered during boot..(not a runtime error).

May also be shown as 806f030c2015ffff or 0x806f030c2015ffff

Severity: Error

Alert Category: Critical - Memory

Serviceable: Yes

CIM Information: **Prefix:** PLAT and **ID:** 0136

SNMP Trap ID: 41

Automatically notify Support: Yes

User response: This is a UEFI detected event. The UEFI diagnostic code for this event can be found in the logged IMM message text. Please refer to the UEFI diagnostic code in the "UEFI diagnostic code" section of the Information Center for the appropriate user response.

806f030c-2016ffff Scrub Failure for [PhysicalMemoryElementName] on Subsystem [MemoryElementName].

Explanation: Memory error discovered during boot..(not a runtime error).

May also be shown as 806f030c2016ffff or 0x806f030c2016ffff

Severity: Error

Alert Category: Critical - Memory

Serviceable: Yes

CIM Information: **Prefix:** PLAT and **ID:** 0136

SNMP Trap ID: 41

Automatically notify Support: Yes

User response: This is a UEFI detected event. The UEFI diagnostic code for this event can be found in the logged IMM message text. Please refer to the UEFI diagnostic code in the "UEFI diagnostic code" section of the Information Center for the appropriate user response.

806f030c-2017ffff Scrub Failure for [PhysicalMemoryElementName] on Subsystem [MemoryElementName].

Explanation: Memory error discovered during boot..(not a runtime error).

May also be shown as 806f030c2017ffff or 0x806f030c2017ffff

Severity: Error

Alert Category: Critical - Memory

Serviceable: Yes

CIM Information: **Prefix:** PLAT and **ID:** 0136

SNMP Trap ID: 41

Automatically notify Support: Yes

User response: This is a UEFI detected event. The UEFI diagnostic code for this event can be found in the logged IMM message text. Please refer to the UEFI diagnostic code in the "UEFI diagnostic code" section of the Information Center for the appropriate user response.

806f030c-2018ffff Scrub Failure for [PhysicalMemoryElementName] on Subsystem [MemoryElementName].

Explanation: Memory error discovered during boot..(not a runtime error).

May also be shown as 806f030c2018ffff or 0x806f030c2018ffff

Severity: Error

Alert Category: Critical - Memory

Serviceable: Yes

CIM Information: **Prefix:** PLAT and **ID:** 0136

SNMP Trap ID: 41

Automatically notify Support: Yes

User response: This is a UEFI detected event. The UEFI diagnostic code for this event can be found in the logged IMM message text. Please refer to the UEFI diagnostic code in the "UEFI diagnostic code" section of the Information Center for the appropriate user response.

806f030c-2019ffff Scrub Failure for [PhysicalMemoryElementName] on Subsystem [MemoryElementName].

Explanation: Memory error discovered during boot..(not a runtime error).

May also be shown as 806f030c2019ffff or 0x806f030c2019ffff

Severity: Error

Alert Category: Critical - Memory

Serviceable: Yes

CIM Information: **Prefix:** PLAT and **ID:** 0136

SNMP Trap ID: 41

Automatically notify Support: Yes

User response: This is a UEFI detected event. The UEFI diagnostic code for this event can be found in the logged IMM message text. Please refer to the UEFI diagnostic code in the "UEFI diagnostic code" section of the Information Center for the appropriate user response.

806f030c-201affff Scrub Failure for [PhysicalMemoryElementName] on Subsystem [MemoryElementName].

Explanation: Memory error discovered during boot..(not a runtime error).

May also be shown as 806f030c201affff or 0x806f030c201affff

Severity: Error

Alert Category: Critical - Memory

Serviceable: Yes

CIM Information: **Prefix:** PLAT and **ID:** 0136

SNMP Trap ID: 41

Automatically notify Support: Yes

User response: This is a UEFI detected event. The UEFI diagnostic code for this event can be found in the logged IMM message text. Please refer to the UEFI diagnostic code in the "UEFI diagnostic code" section of the Information Center for the appropriate user response.

806f030c-201bffff Scrub Failure for [PhysicalMemoryElementName] on Subsystem [MemoryElementName].

Explanation: Memory error discovered during boot..(not a runtime error).

May also be shown as 806f030c201bffff or 0x806f030c201bffff

Severity: Error

Alert Category: Critical - Memory

Serviceable: Yes

CIM Information: **Prefix:** PLAT and **ID:** 0136

SNMP Trap ID: 41

Automatically notify Support: Yes

User response: This is a UEFI detected event. The UEFI diagnostic code for this event can be found in the logged IMM message text. Please refer to the UEFI diagnostic code in the "UEFI diagnostic code" section of the Information Center for the appropriate user response.

806f030c-201cffff Scrub Failure for [PhysicalMemoryElementName] on Subsystem [MemoryElementName].

Explanation: Memory error discovered during boot..(not a runtime error).

May also be shown as 806f030c201cffff or 0x806f030c201cffff

Severity: Error

Alert Category: Critical - Memory

Serviceable: Yes

CIM Information: **Prefix:** PLAT and **ID:** 0136

SNMP Trap ID: 41

Automatically notify Support: Yes

User response: This is a UEFI detected event. The UEFI diagnostic code for this event can be found in the logged IMM message text. Please refer to the UEFI diagnostic code in the "UEFI diagnostic code" section of the Information Center for the appropriate user response.

806f030c-201dffff Scrub Failure for [PhysicalMemoryElementName] on Subsystem [MemoryElementName].

Explanation: Memory error discovered during boot..(not a runtime error).

May also be shown as 806f030c201dffff or 0x806f030c201dffff

Severity: Error

Alert Category: Critical - Memory

Serviceable: Yes

CIM Information: **Prefix:** PLAT and **ID:** 0136

SNMP Trap ID: 41

Automatically notify Support: Yes

User response: This is a UEFI detected event. The UEFI diagnostic code for this event can be found in the logged IMM message text. Please refer to the UEFI diagnostic code in the "UEFI diagnostic code" section of the Information Center for the appropriate user response.

806f030c-201effff Scrub Failure for [PhysicalMemoryElementName] on Subsystem [MemoryElementName].

Explanation: Memory error discovered during boot..(not a runtime error).

May also be shown as 806f030c201effff or 0x806f030c201effff

Severity: Error

Alert Category: Critical - Memory

Serviceable: Yes

CIM Information: **Prefix:** PLAT and **ID:** 0136

SNMP Trap ID: 41

Automatically notify Support: Yes

User response: This is a UEFI detected event. The UEFI diagnostic code for this event can be found in the logged IMM message text. Please refer to the UEFI diagnostic code in the "UEFI diagnostic code" section of the Information Center for the appropriate user response.

806f030c-201fffff Scrub Failure for [PhysicalMemoryElementName] on Subsystem [MemoryElementName].

Explanation: Memory error discovered during boot..(not a runtime error).

May also be shown as 806f030c201fffff or 0x806f030c201fffff

Severity: Error

Alert Category: Critical - Memory

Serviceable: Yes

CIM Information: **Prefix:** PLAT and **ID:** 0136

SNMP Trap ID: 41

Automatically notify Support: Yes

User response: This is a UEFI detected event. The UEFI diagnostic code for this event can be found in the logged IMM message text. Please refer to the UEFI diagnostic code in the "UEFI diagnostic code" section of the Information Center for the appropriate user response.

806f030c-2020ffff Scrub Failure for [PhysicalMemoryElementName] on Subsystem [MemoryElementName].

Explanation: Memory error discovered during boot..(not a runtime error).

May also be shown as 806f030c2020ffff or 0x806f030c2020ffff

Severity: Error

Alert Category: Critical - Memory

Serviceable: Yes

CIM Information: **Prefix:** PLAT and **ID:** 0136

SNMP Trap ID: 41

Automatically notify Support: Yes

User response: This is a UEFI detected event. The UEFI diagnostic code for this event can be found in the logged IMM message text. Please refer to the UEFI diagnostic code in the "UEFI diagnostic code" section of the Information Center for the appropriate user response.

806f030c-2021ffff Scrub Failure for [PhysicalMemoryElementName] on Subsystem [MemoryElementName].

Explanation: Memory error discovered during boot..(not a runtime error).

May also be shown as 806f030c2021ffff or 0x806f030c2021ffff

Severity: Error

Alert Category: Critical - Memory

Serviceable: Yes

CIM Information: **Prefix:** PLAT and **ID:** 0136

SNMP Trap ID: 41

Automatically notify Support: Yes

User response: This is a UEFI detected event. The UEFI diagnostic code for this event can be found in the logged IMM message text. Please refer to the UEFI diagnostic code in the "UEFI diagnostic code" section of the Information Center for the appropriate user response.

806f030c-2022ffff Scrub Failure for [PhysicalMemoryElementName] on Subsystem [MemoryElementName].

Explanation: Memory error discovered during boot..(not a runtime error).

May also be shown as 806f030c2022ffff or 0x806f030c2022ffff

Severity: Error

Alert Category: Critical - Memory

Serviceable: Yes

CIM Information: **Prefix:** PLAT and **ID:** 0136

SNMP Trap ID: 41

Automatically notify Support: Yes

User response: This is a UEFI detected event. The UEFI diagnostic code for this event can be found in the logged IMM message text. Please refer to the UEFI diagnostic code in the "UEFI diagnostic code" section of the Information Center for the appropriate user response.

806f030c-2023ffff Scrub Failure for [PhysicalMemoryElementName] on Subsystem [MemoryElementName].

Explanation: Memory error discovered during boot..(not a runtime error).

May also be shown as 806f030c2023ffff or 0x806f030c2023ffff

Severity: Error

Alert Category: Critical - Memory

Serviceable: Yes

CIM Information: **Prefix:** PLAT and **ID:** 0136

SNMP Trap ID: 41

Automatically notify Support: Yes

User response: This is a UEFI detected event. The UEFI diagnostic code for this event can be found in the logged IMM message text. Please refer to the UEFI diagnostic code in the "UEFI diagnostic code" section of the Information Center for the appropriate user response.

806f030c-2024ffff Scrub Failure for [PhysicalMemoryElementName] on Subsystem [MemoryElementName].

Explanation: Memory error discovered during boot..(not a runtime error).

May also be shown as 806f030c2024ffff or 0x806f030c2024ffff

Severity: Error

Alert Category: Critical - Memory

Serviceable: Yes

CIM Information: **Prefix:** PLAT and **ID:** 0136

SNMP Trap ID: 41

Automatically notify Support: Yes

User response: This is a UEFI detected event. The UEFI diagnostic code for this event can be found in the logged IMM message text. Please refer to the UEFI diagnostic code in the "UEFI diagnostic code" section of the Information Center for the appropriate user response.

806f030c-2025ffff Scrub Failure for [PhysicalMemoryElementName] on Subsystem [MemoryElementName].

Explanation: Memory error discovered during boot..(not a runtime error).

May also be shown as 806f030c2025ffff or 0x806f030c2025ffff

Severity: Error

Alert Category: Critical - Memory

Serviceable: Yes

CIM Information: **Prefix:** PLAT and **ID:** 0136

SNMP Trap ID: 41

Automatically notify Support: Yes

User response: This is a UEFI detected event. The UEFI diagnostic code for this event can be found in the logged IMM message text. Please refer to the UEFI diagnostic code in the "UEFI diagnostic code" section of the Information Center for the appropriate user response.

806f030c-2026ffff Scrub Failure for [PhysicalMemoryElementName] on Subsystem [MemoryElementName].

Explanation: Memory error discovered during boot..(not a runtime error).

May also be shown as 806f030c2026ffff or 0x806f030c2026ffff

Severity: Error

Alert Category: Critical - Memory

Serviceable: Yes

CIM Information: **Prefix:** PLAT and **ID:** 0136

SNMP Trap ID: 41

Automatically notify Support: Yes

User response: This is a UEFI detected event. The UEFI diagnostic code for this event can be found in the logged IMM message text. Please refer to the UEFI diagnostic code in the "UEFI diagnostic code" section of the Information Center for the appropriate user response.

806f030c-2027ffff Scrub Failure for [PhysicalMemoryElementName] on Subsystem [MemoryElementName].

Explanation: Memory error discovered during boot..(not a runtime error).

May also be shown as 806f030c2027ffff or 0x806f030c2027ffff

Severity: Error

Alert Category: Critical - Memory

Serviceable: Yes

CIM Information: **Prefix:** PLAT and **ID:** 0136

SNMP Trap ID: 41

Automatically notify Support: Yes

User response: This is a UEFI detected event. The UEFI diagnostic code for this event can be found in the logged IMM message text. Please refer to the UEFI diagnostic code in the "UEFI diagnostic code" section of the Information Center for the appropriate user response.

806f030c-2028ffff Scrub Failure for [PhysicalMemoryElementName] on Subsystem [MemoryElementName].

Explanation: Memory error discovered during boot..(not a runtime error).

May also be shown as 806f030c2028ffff or 0x806f030c2028ffff

Severity: Error

Alert Category: Critical - Memory

Serviceable: Yes

CIM Information: **Prefix:** PLAT and **ID:** 0136

SNMP Trap ID: 41

Automatically notify Support: Yes

User response: This is a UEFI detected event. The UEFI diagnostic code for this event can be found in the logged IMM message text. Please refer to the UEFI diagnostic code in the "UEFI diagnostic code" section of the Information Center for the appropriate user response.

806f030c-2029ffff Scrub Failure for [PhysicalMemoryElementName] on Subsystem [MemoryElementName].

Explanation: Memory error discovered during boot..(not a runtime error).

May also be shown as 806f030c2029ffff or 0x806f030c2029ffff

Severity: Error

Alert Category: Critical - Memory

Serviceable: Yes

CIM Information: **Prefix:** PLAT and **ID:** 0136

SNMP Trap ID: 41

Automatically notify Support: Yes

User response: This is a UEFI detected event. The UEFI diagnostic code for this event can be found in the logged IMM message text. Please refer to the UEFI diagnostic code in the "UEFI diagnostic code" section of the Information Center for the appropriate user response.

806f030c-202affff Scrub Failure for [PhysicalMemoryElementName] on Subsystem [MemoryElementName].

Explanation: Memory error discovered during boot..(not a runtime error).

May also be shown as 806f030c202affff or 0x806f030c202affff

Severity: Error

Alert Category: Critical - Memory

Serviceable: Yes

CIM Information: **Prefix:** PLAT and **ID:** 0136

SNMP Trap ID: 41

Automatically notify Support: Yes

User response: This is a UEFI detected event. The UEFI diagnostic code for this event can be found in the logged IMM message text. Please refer to the UEFI diagnostic code in the "UEFI diagnostic code" section of the Information Center for the appropriate user response.

806f030c-202bffff Scrub Failure for [PhysicalMemoryElementName] on Subsystem [MemoryElementName].

Explanation: Memory error discovered during boot..(not a runtime error).

May also be shown as 806f030c202bffff or 0x806f030c202bffff

Severity: Error

Alert Category: Critical - Memory

Serviceable: Yes

CIM Information: **Prefix:** PLAT and **ID:** 0136

SNMP Trap ID: 41

Automatically notify Support: Yes

User response: This is a UEFI detected event. The UEFI diagnostic code for this event can be found in the logged IMM message text. Please refer to the UEFI diagnostic code in the "UEFI diagnostic code" section of the Information Center for the appropriate user response.

806f030c-202cffff Scrub Failure for [PhysicalMemoryElementName] on Subsystem [MemoryElementName].

Explanation: Memory error discovered during boot..(not a runtime error).

May also be shown as 806f030c202cffff or 0x806f030c202cffff

Severity: Error

Alert Category: Critical - Memory

Serviceable: Yes

CIM Information: **Prefix:** PLAT and **ID:** 0136

SNMP Trap ID: 41

Automatically notify Support: Yes

User response: This is a UEFI detected event. The UEFI diagnostic code for this event can be found in the logged IMM message text. Please refer to the UEFI diagnostic code in the "UEFI diagnostic code" section of the Information Center for the appropriate user response.

806f030c-202dffff Scrub Failure for [PhysicalMemoryElementName] on Subsystem [MemoryElementName].

Explanation: Memory error discovered during boot..(not a runtime error).

May also be shown as 806f030c202dffff or 0x806f030c202dffff

Severity: Error

Alert Category: Critical - Memory

Serviceable: Yes

CIM Information: **Prefix:** PLAT and **ID:** 0136

SNMP Trap ID: 41

Automatically notify Support: Yes

User response: This is a UEFI detected event. The UEFI diagnostic code for this event can be found in the logged IMM message text. Please refer to the UEFI diagnostic code in the "UEFI diagnostic code" section of the Information Center for the appropriate user response.

806f030c-202effff Scrub Failure for [PhysicalMemoryElementName] on Subsystem [MemoryElementName].

Explanation: Memory error discovered during boot..(not a runtime error).

May also be shown as 806f030c202effff or 0x806f030c202effff

Severity: Error

Alert Category: Critical - Memory

Serviceable: Yes

CIM Information: **Prefix:** PLAT and **ID:** 0136

SNMP Trap ID: 41

Automatically notify Support: Yes

User response: This is a UEFI detected event. The UEFI diagnostic code for this event can be found in the logged IMM message text. Please refer to the UEFI diagnostic code in the "UEFI diagnostic code" section of the Information Center for the appropriate user response.

806f030c-202fffff Scrub Failure for [PhysicalMemoryElementName] on Subsystem [MemoryElementName].

Explanation: Memory error discovered during boot..(not a runtime error).

May also be shown as 806f030c202fffff or 0x806f030c202fffff

Severity: Error

Alert Category: Critical - Memory

Serviceable: Yes

CIM Information: **Prefix:** PLAT and **ID:** 0136

SNMP Trap ID: 41

Automatically notify Support: Yes

User response: This is a UEFI detected event. The UEFI diagnostic code for this event can be found in the logged IMM message text. Please refer to the UEFI diagnostic code in the "UEFI diagnostic code" section of the Information Center for the appropriate user response.

806f030c-2030ffff Scrub Failure for [PhysicalMemoryElementName] on Subsystem [MemoryElementName].

Explanation: Memory error discovered during boot..(not a runtime error).

May also be shown as 806f030c2030ffff or 0x806f030c2030ffff

Severity: Error

Alert Category: Critical - Memory

Serviceable: Yes

CIM Information: **Prefix:** PLAT and **ID:** 0136

SNMP Trap ID: 41

Automatically notify Support: Yes

User response: This is a UEFI detected event. The UEFI diagnostic code for this event can be found in the logged IMM message text. Please refer to the UEFI diagnostic code in the "UEFI diagnostic code" section of the Information Center for the appropriate user response.

806f030c-2581ffff Scrub Failure for [PhysicalMemoryElementName] on Subsystem [MemoryElementName].

Explanation: Memory error discovered during boot..(not a runtime error).

May also be shown as 806f030c2581ffff or 0x806f030c2581ffff

Severity: Error

Alert Category: Critical - Memory

Serviceable: Yes

CIM Information: **Prefix:** PLAT and **ID:** 0136

SNMP Trap ID: 41

Automatically notify Support: Yes

User response: This is a UEFI detected event. The UEFI diagnostic code for this event can be found in the logged IMM message text. Please refer to the UEFI diagnostic code in the "UEFI diagnostic code" section of the Information Center for the appropriate user response.

806f0313-1701ffff A software NMI has occurred on system [ComputerSystemElementName].

Explanation: A software NMI has occurred. The compute node might have restarted, depending on the configuration setting.

May also be shown as 806f03131701ffff or 0x806f03131701ffff

Severity: Error

Alert Category: Critical - Other

Serviceable: Yes

CIM Information: **Prefix:** PLAT and **ID:** 0228

SNMP Trap ID: 50

Automatically notify Support: No

User response: Check the operating-system logs and resolve any issues related the NMI.

806f0323-2101ffff Power cycle of system [ComputerSystemElementName] initiated by watchdog IPMI Watchdog.

Explanation: The IPMI watchdog timer has expired. The compute node has been powered off and powered on.

May also be shown as 806f03232101ffff or 0x806f03232101ffff

Severity: Info

Alert Category: System - Other

Serviceable: No

CIM Information: **Prefix:** PLAT and **ID:** 0374

SNMP Trap ID:

Automatically notify Support: No

User response: Information only; no action is required.

806f0409-0701ffff [PowerSupplyElementName] has lost power.

Explanation: This message is for the use case when an implementation has detected a Power Unit that has lost power.

May also be shown as 806f04090701ffff or 0x806f04090701ffff

Severity: Info

Alert Category: System - Other

Serviceable: No

CIM Information: **Prefix:** PLAT and **ID:** 0112

SNMP Trap ID:

Automatically notify Support: No

User response: Information only; no action is required.

806f040c-2001ffff [PhysicalMemoryElementName] Disabled on Subsystem [MemoryElementName].

Explanation: This message is for the use case when an implementation has detected that Memory has been Disabled.

May also be shown as 806f040c2001ffff or 0x806f040c2001ffff

Severity: Info

Alert Category: System - Other

Serviceable: No

CIM Information: **Prefix:** PLAT and **ID:** 0131

SNMP Trap ID:

Automatically notify Support: No

User response: This is a UEFI detected event. The UEFI diagnostic code for this event can be found in the logged IMM message text. Please refer to the UEFI diagnostic code in the "UEFI diagnostic code" section of the Information Center for the appropriate user response.

806f040c-2002ffff [PhysicalMemoryElementName] Disabled on Subsystem [MemoryElementName].

Explanation: This message is for the use case when an implementation has detected that Memory has been Disabled.

May also be shown as 806f040c2002ffff or 0x806f040c2002ffff

Severity: Info

Alert Category: System - Other

Serviceable: No

CIM Information: **Prefix:** PLAT and **ID:** 0131

SNMP Trap ID:

Automatically notify Support: No

User response: This is a UEFI detected event. The UEFI diagnostic code for this event can be found in the logged IMM message text. Please refer to the UEFI diagnostic code in the "UEFI diagnostic code" section of the Information Center for the appropriate user response.

806f040c-2003ffff [PhysicalMemoryElementName] Disabled on Subsystem [MemoryElementName].

Explanation: This message is for the use case when an implementation has detected that Memory has been Disabled.

May also be shown as 806f040c2003ffff or 0x806f040c2003ffff

Severity: Info

Alert Category: System - Other

Serviceable: No

CIM Information: **Prefix:** PLAT and **ID:** 0131

SNMP Trap ID:

Automatically notify Support: No

User response: This is a UEFI detected event. The UEFI diagnostic code for this event can be found in the logged IMM message text. Please refer to the UEFI diagnostic code in the "UEFI diagnostic code" section of the Information Center for the appropriate user response.

806f040c-2004ffff [PhysicalMemoryElementName] Disabled on Subsystem [MemoryElementName].

Explanation: This message is for the use case when an implementation has detected that Memory has been Disabled.

May also be shown as 806f040c2004ffff or 0x806f040c2004ffff

Severity: Info

Alert Category: System - Other

Serviceable: No

CIM Information: **Prefix:** PLAT and **ID:** 0131

SNMP Trap ID:

Automatically notify Support: No

User response: This is a UEFI detected event. The UEFI diagnostic code for this event can be found in the logged IMM message text. Please refer to the UEFI diagnostic code in the "UEFI diagnostic code" section of the Information Center for the appropriate user response.

806f040c-2005ffff [PhysicalMemoryElementName] Disabled on Subsystem [MemoryElementName].

Explanation: This message is for the use case when an implementation has detected that Memory has been Disabled.

May also be shown as 806f040c2005ffff or 0x806f040c2005ffff

Severity: Info

Alert Category: System - Other

Serviceable: No

CIM Information: **Prefix:** PLAT and **ID:** 0131

SNMP Trap ID:

Automatically notify Support: No

User response: This is a UEFI detected event. The UEFI diagnostic code for this event can be found in the logged IMM message text. Please refer to the UEFI diagnostic code in the "UEFI diagnostic code" section of the Information Center for the appropriate user response.

806f040c-2006ffff [PhysicalMemoryElementName] Disabled on Subsystem [MemoryElementName].

Explanation: This message is for the use case when an implementation has detected that Memory has been Disabled.

May also be shown as 806f040c2006ffff or 0x806f040c2006ffff

Severity: Info

Alert Category: System - Other

Serviceable: No

CIM Information: **Prefix:** PLAT and **ID:** 0131

SNMP Trap ID:

Automatically notify Support: No

User response: This is a UEFI detected event. The UEFI diagnostic code for this event can be found in the logged IMM message text. Please refer to the UEFI diagnostic code in the "UEFI diagnostic code" section of the Information Center for the appropriate user response.

806f040c-2007ffff [PhysicalMemoryElementName] Disabled on Subsystem [MemoryElementName].

Explanation: This message is for the use case when an implementation has detected that Memory has been Disabled.

May also be shown as 806f040c2007ffff or 0x806f040c2007ffff

Severity: Info

Alert Category: System - Other

Serviceable: No

CIM Information: **Prefix:** PLAT and **ID:** 0131

SNMP Trap ID:

Automatically notify Support: No

User response: This is a UEFI detected event. The UEFI diagnostic code for this event can be found in the logged IMM message text. Please refer to the UEFI diagnostic code in the "UEFI diagnostic code" section of the Information Center for the appropriate user response.

806f040c-2008ffff [PhysicalMemoryElementName] Disabled on Subsystem [MemoryElementName].

Explanation: This message is for the use case when an implementation has detected that Memory has been Disabled.

May also be shown as 806f040c2008ffff or 0x806f040c2008ffff

Severity: Info

Alert Category: System - Other

Serviceable: No

CIM Information: **Prefix:** PLAT and **ID:** 0131

SNMP Trap ID:

Automatically notify Support: No

User response: This is a UEFI detected event. The UEFI diagnostic code for this event can be found in the logged IMM message text. Please refer to the UEFI diagnostic code in the "UEFI diagnostic code" section of the Information Center for the appropriate user response.

806f040c-2009ffff [PhysicalMemoryElementName] Disabled on Subsystem [MemoryElementName].

Explanation: This message is for the use case when an implementation has detected that Memory has been Disabled.

May also be shown as 806f040c2009ffff or 0x806f040c2009ffff

Severity: Info

Alert Category: System - Other

Serviceable: No

CIM Information: **Prefix:** PLAT and **ID:** 0131

SNMP Trap ID:

Automatically notify Support: No

User response: This is a UEFI detected event. The UEFI diagnostic code for this event can be found in the logged IMM message text. Please refer to the UEFI diagnostic code in the "UEFI diagnostic code" section of the Information Center for the appropriate user response.

806f040c-200affff [PhysicalMemoryElementName] Disabled on Subsystem [MemoryElementName].

Explanation: This message is for the use case when an implementation has detected that Memory has been Disabled.

May also be shown as 806f040c200affff or 0x806f040c200affff

Severity: Info

Alert Category: System - Other

Serviceable: No

CIM Information: **Prefix:** PLAT and **ID:** 0131

SNMP Trap ID:

Automatically notify Support: No

User response: This is a UEFI detected event. The UEFI diagnostic code for this event can be found in the logged IMM message text. Please refer to the UEFI diagnostic code in the "UEFI diagnostic code" section of the Information Center for the appropriate user response.

806f040c-200bffff [PhysicalMemoryElementName] Disabled on Subsystem [MemoryElementName].

Explanation: This message is for the use case when an implementation has detected that Memory has been Disabled.

May also be shown as 806f040c200bffff or 0x806f040c200bffff

Severity: Info

Alert Category: System - Other

Serviceable: No

CIM Information: **Prefix:** PLAT and **ID:** 0131

SNMP Trap ID:

Automatically notify Support: No

User response: This is a UEFI detected event. The UEFI diagnostic code for this event can be found in the logged IMM message text. Please refer to the UEFI diagnostic code in the "UEFI diagnostic code" section of the Information Center for the appropriate user response.

806f040c-200cffff [PhysicalMemoryElementName] Disabled on Subsystem [MemoryElementName].

Explanation: This message is for the use case when an implementation has detected that Memory has been Disabled.

May also be shown as 806f040c200cffff or 0x806f040c200cffff

Severity: Info

Alert Category: System - Other

Serviceable: No

CIM Information: **Prefix:** PLAT and **ID:** 0131

SNMP Trap ID:

Automatically notify Support: No

User response: This is a UEFI detected event. The UEFI diagnostic code for this event can be found in the logged IMM message text. Please refer to the UEFI diagnostic code in the "UEFI diagnostic code" section of the Information Center for the appropriate user response.

806f040c-200dffff [PhysicalMemoryElementName] Disabled on Subsystem [MemoryElementName].

Explanation: This message is for the use case when an implementation has detected that Memory has been Disabled.

May also be shown as 806f040c200dffff or 0x806f040c200dffff

Severity: Info

Alert Category: System - Other

Serviceable: No

CIM Information: **Prefix:** PLAT and **ID:** 0131

SNMP Trap ID:

Automatically notify Support: No

User response: This is a UEFI detected event. The UEFI diagnostic code for this event can be found in the logged IMM message text. Please refer to the UEFI diagnostic code in the "UEFI diagnostic code" section of the Information Center for the appropriate user response.

806f040c-200effff [PhysicalMemoryElementName] Disabled on Subsystem [MemoryElementName].

Explanation: This message is for the use case when an implementation has detected that Memory has been Disabled.

May also be shown as 806f040c200effff or 0x806f040c200effff

Severity: Info

Alert Category: System - Other

Serviceable: No

CIM Information: **Prefix:** PLAT and **ID:** 0131

SNMP Trap ID:

Automatically notify Support: No

User response: This is a UEFI detected event. The UEFI diagnostic code for this event can be found in the logged IMM message text. Please refer to the UEFI diagnostic code in the "UEFI diagnostic code" section of the Information Center for the appropriate user response.

806f040c-200fffff [PhysicalMemoryElementName] Disabled on Subsystem [MemoryElementName].

Explanation: This message is for the use case when an implementation has detected that Memory has been Disabled.

May also be shown as 806f040c200fffff or 0x806f040c200fffff

Severity: Info

Alert Category: System - Other

Serviceable: No

CIM Information: **Prefix:** PLAT and **ID:** 0131

SNMP Trap ID:

Automatically notify Support: No

User response: This is a UEFI detected event. The UEFI diagnostic code for this event can be found in the logged IMM message text. Please refer to the UEFI diagnostic code in the "UEFI diagnostic code" section of the Information Center for the appropriate user response.

806f040c-2010ffff [PhysicalMemoryElementName] Disabled on Subsystem [MemoryElementName].

Explanation: This message is for the use case when an implementation has detected that Memory has been Disabled.

May also be shown as 806f040c2010ffff or 0x806f040c2010ffff

Severity: Info

Alert Category: System - Other

Serviceable: No

CIM Information: **Prefix:** PLAT and **ID:** 0131

SNMP Trap ID:

Automatically notify Support: No

User response: This is a UEFI detected event. The UEFI diagnostic code for this event can be found in the logged IMM message text. Please refer to the UEFI diagnostic code in the "UEFI diagnostic code" section of the Information Center for the appropriate user response.

806f040c-2011ffff [PhysicalMemoryElementName] Disabled on Subsystem [MemoryElementName].

Explanation: This message is for the use case when an implementation has detected that Memory has been Disabled.

May also be shown as 806f040c2011ffff or 0x806f040c2011ffff

Severity: Info

Alert Category: System - Other

Serviceable: No

CIM Information: **Prefix:** PLAT and **ID:** 0131

SNMP Trap ID:

Automatically notify Support: No

User response: This is a UEFI detected event. The UEFI diagnostic code for this event can be found in the logged IMM message text. Please refer to the UEFI diagnostic code in the "UEFI diagnostic code" section of the Information Center for the appropriate user response.

806f040c-2012ffff [PhysicalMemoryElementName] Disabled on Subsystem [MemoryElementName].

Explanation: This message is for the use case when an implementation has detected that Memory has been Disabled.

May also be shown as 806f040c2012ffff or 0x806f040c2012ffff

Severity: Info

Alert Category: System - Other

Serviceable: No

CIM Information: **Prefix:** PLAT and **ID:** 0131

SNMP Trap ID:

Automatically notify Support: No

User response: This is a UEFI detected event. The UEFI diagnostic code for this event can be found in the logged IMM message text. Please refer to the UEFI diagnostic code in the "UEFI diagnostic code" section of the Information Center for the appropriate user response.

806f040c-2013ffff [PhysicalMemoryElementName] Disabled on Subsystem [MemoryElementName].

Explanation: This message is for the use case when an implementation has detected that Memory has been Disabled.

May also be shown as 806f040c2013ffff or 0x806f040c2013ffff

Severity: Info

Alert Category: System - Other

Serviceable: No

CIM Information: **Prefix:** PLAT and **ID:** 0131

SNMP Trap ID:

Automatically notify Support: No

User response: This is a UEFI detected event. The UEFI diagnostic code for this event can be found in the logged IMM message text. Please refer to the UEFI diagnostic code in the "UEFI diagnostic code" section of the Information Center for the appropriate user response.

806f040c-2014ffff [PhysicalMemoryElementName] Disabled on Subsystem [MemoryElementName].

Explanation: This message is for the use case when an implementation has detected that Memory has been Disabled.

May also be shown as 806f040c2014ffff or 0x806f040c2014ffff

Severity: Info

Alert Category: System - Other

Serviceable: No

CIM Information: **Prefix:** PLAT and **ID:** 0131

SNMP Trap ID:

Automatically notify Support: No

User response: This is a UEFI detected event. The UEFI diagnostic code for this event can be found in the logged IMM message text. Please refer to the UEFI diagnostic code in the "UEFI diagnostic code" section of the Information Center for the appropriate user response.

806f040c-2015ffff [PhysicalMemoryElementName] Disabled on Subsystem [MemoryElementName].

Explanation: This message is for the use case when an implementation has detected that Memory has been Disabled.

May also be shown as 806f040c2015ffff or 0x806f040c2015ffff

Severity: Info

Alert Category: System - Other

Serviceable: No

CIM Information: **Prefix:** PLAT and **ID:** 0131

SNMP Trap ID:

Automatically notify Support: No

User response: This is a UEFI detected event. The UEFI diagnostic code for this event can be found in the logged IMM message text. Please refer to the UEFI diagnostic code in the "UEFI diagnostic code" section of the Information Center for the appropriate user response.

806f040c-2016ffff [PhysicalMemoryElementName] Disabled on Subsystem [MemoryElementName].

Explanation: This message is for the use case when an implementation has detected that Memory has been Disabled.

May also be shown as 806f040c2016ffff or 0x806f040c2016ffff

Severity: Info

Alert Category: System - Other

Serviceable: No

CIM Information: **Prefix:** PLAT and **ID:** 0131

SNMP Trap ID:

Automatically notify Support: No

User response: This is a UEFI detected event. The UEFI diagnostic code for this event can be found in the logged IMM message text. Please refer to the UEFI diagnostic code in the "UEFI diagnostic code" section of the Information Center for the appropriate user response.

806f040c-2017ffff [PhysicalMemoryElementName] Disabled on Subsystem [MemoryElementName].

Explanation: This message is for the use case when an implementation has detected that Memory has been Disabled.

May also be shown as 806f040c2017ffff or 0x806f040c2017ffff

Severity: Info

Alert Category: System - Other

Serviceable: No

CIM Information: **Prefix:** PLAT and **ID:** 0131

SNMP Trap ID:

Automatically notify Support: No

User response: This is a UEFI detected event. The UEFI diagnostic code for this event can be found in the logged IMM message text. Please refer to the UEFI diagnostic code in the "UEFI diagnostic code" section of the Information Center for the appropriate user response.

806f040c-2018ffff [PhysicalMemoryElementName] Disabled on Subsystem [MemoryElementName].

Explanation: This message is for the use case when an implementation has detected that Memory has been Disabled.

May also be shown as 806f040c2018ffff or 0x806f040c2018ffff

Severity: Info

Alert Category: System - Other

Serviceable: No

CIM Information: **Prefix:** PLAT and **ID:** 0131

SNMP Trap ID:

Automatically notify Support: No

User response: This is a UEFI detected event. The UEFI diagnostic code for this event can be found in the logged IMM message text. Please refer to the UEFI diagnostic code in the "UEFI diagnostic code" section of the Information Center for the appropriate user response.

806f040c-2019ffff [PhysicalMemoryElementName] Disabled on Subsystem [MemoryElementName].

Explanation: This message is for the use case when an implementation has detected that Memory has been Disabled.

May also be shown as 806f040c2019ffff or 0x806f040c2019ffff

Severity: Info

Alert Category: System - Other

Serviceable: No

CIM Information: **Prefix:** PLAT and **ID:** 0131

SNMP Trap ID:

Automatically notify Support: No

User response: This is a UEFI detected event. The UEFI diagnostic code for this event can be found in the logged IMM message text. Please refer to the UEFI diagnostic code in the "UEFI diagnostic code" section of the Information Center for the appropriate user response.

806f040c-201affff [PhysicalMemoryElementName] Disabled on Subsystem [MemoryElementName].

Explanation: This message is for the use case when an implementation has detected that Memory has been Disabled.

May also be shown as 806f040c201affff or 0x806f040c201affff

Severity: Info

Alert Category: System - Other

Serviceable: No

CIM Information: **Prefix:** PLAT and **ID:** 0131

SNMP Trap ID:

Automatically notify Support: No

User response: This is a UEFI detected event. The UEFI diagnostic code for this event can be found in the logged IMM message text. Please refer to the UEFI diagnostic code in the "UEFI diagnostic code" section of the Information Center for the appropriate user response.

806f040c-201bffff [PhysicalMemoryElementName] Disabled on Subsystem [MemoryElementName].

Explanation: This message is for the use case when an implementation has detected that Memory has been Disabled.

May also be shown as 806f040c201bffff or 0x806f040c201bffff

Severity: Info

Alert Category: System - Other

Serviceable: No

CIM Information: **Prefix:** PLAT and **ID:** 0131

SNMP Trap ID:

Automatically notify Support: No

User response: This is a UEFI detected event. The UEFI diagnostic code for this event can be found in the logged IMM message text. Please refer to the UEFI diagnostic code in the "UEFI diagnostic code" section of the Information Center for the appropriate user response.

806f040c-201cffff [PhysicalMemoryElementName] Disabled on Subsystem [MemoryElementName].

Explanation: This message is for the use case when an implementation has detected that Memory has been Disabled.

May also be shown as 806f040c201cffff or 0x806f040c201cffff

Severity: Info

Alert Category: System - Other

Serviceable: No

CIM Information: **Prefix:** PLAT and **ID:** 0131

SNMP Trap ID:

Automatically notify Support: No

User response: This is a UEFI detected event. The UEFI diagnostic code for this event can be found in the logged IMM message text. Please refer to the UEFI diagnostic code in the "UEFI diagnostic code" section of the Information Center for the appropriate user response.

806f040c-201dffff [PhysicalMemoryElementName] Disabled on Subsystem [MemoryElementName].

Explanation: This message is for the use case when an implementation has detected that Memory has been Disabled.

May also be shown as 806f040c201dffff or 0x806f040c201dffff

Severity: Info

Alert Category: System - Other

Serviceable: No

CIM Information: **Prefix:** PLAT and **ID:** 0131

SNMP Trap ID:

Automatically notify Support: No

User response: This is a UEFI detected event. The UEFI diagnostic code for this event can be found in the logged IMM message text. Please refer to the UEFI diagnostic code in the "UEFI diagnostic code" section of the Information Center for the appropriate user response.

806f040c-201effff [PhysicalMemoryElementName] Disabled on Subsystem [MemoryElementName].

Explanation: This message is for the use case when an implementation has detected that Memory has been Disabled.

May also be shown as 806f040c201effff or 0x806f040c201effff

Severity: Info

Alert Category: System - Other

Serviceable: No

CIM Information: **Prefix:** PLAT and **ID:** 0131

SNMP Trap ID:

Automatically notify Support: No

User response: This is a UEFI detected event. The UEFI diagnostic code for this event can be found in the logged IMM message text. Please refer to the UEFI diagnostic code in the "UEFI diagnostic code" section of the Information Center for the appropriate user response.

806f040c-201fffff [PhysicalMemoryElementName] Disabled on Subsystem [MemoryElementName].

Explanation: This message is for the use case when an implementation has detected that Memory has been Disabled.

May also be shown as 806f040c201fffff or 0x806f040c201fffff

Severity: Info

Alert Category: System - Other

Serviceable: No

CIM Information: **Prefix:** PLAT and **ID:** 0131

SNMP Trap ID:

Automatically notify Support: No

User response: This is a UEFI detected event. The UEFI diagnostic code for this event can be found in the logged IMM message text. Please refer to the UEFI diagnostic code in the "UEFI diagnostic code" section of the Information Center for the appropriate user response.

806f040c-2020ffff [PhysicalMemoryElementName] Disabled on Subsystem [MemoryElementName].

Explanation: This message is for the use case when an implementation has detected that Memory has been Disabled.

May also be shown as 806f040c2020ffff or 0x806f040c2020ffff

Severity: Info

Alert Category: System - Other

Serviceable: No

CIM Information: **Prefix:** PLAT and **ID:** 0131

SNMP Trap ID:

Automatically notify Support: No

User response: This is a UEFI detected event. The UEFI diagnostic code for this event can be found in the logged IMM message text. Please refer to the UEFI diagnostic code in the "UEFI diagnostic code" section of the Information Center for the appropriate user response.

806f040c-2021ffff [PhysicalMemoryElementName] Disabled on Subsystem [MemoryElementName].

Explanation: This message is for the use case when an implementation has detected that Memory has been Disabled.

May also be shown as 806f040c2021ffff or 0x806f040c2021ffff

Severity: Info

Alert Category: System - Other

Serviceable: No

CIM Information: **Prefix:** PLAT and **ID:** 0131

SNMP Trap ID:

Automatically notify Support: No

User response: This is a UEFI detected event. The UEFI diagnostic code for this event can be found in the logged IMM message text. Please refer to the UEFI diagnostic code in the "UEFI diagnostic code" section of the Information Center for the appropriate user response.

806f040c-2022ffff [PhysicalMemoryElementName] Disabled on Subsystem [MemoryElementName].

Explanation: This message is for the use case when an implementation has detected that Memory has been Disabled.

May also be shown as 806f040c2022ffff or 0x806f040c2022ffff

Severity: Info

Alert Category: System - Other

Serviceable: No

CIM Information: **Prefix:** PLAT and **ID:** 0131

SNMP Trap ID:

Automatically notify Support: No

User response: This is a UEFI detected event. The UEFI diagnostic code for this event can be found in the logged IMM message text. Please refer to the UEFI diagnostic code in the "UEFI diagnostic code" section of the Information Center for the appropriate user response.

806f040c-2023ffff [PhysicalMemoryElementName] Disabled on Subsystem [MemoryElementName].

Explanation: This message is for the use case when an implementation has detected that Memory has been Disabled.

May also be shown as 806f040c2023ffff or 0x806f040c2023ffff

Severity: Info

Alert Category: System - Other

Serviceable: No

CIM Information: **Prefix:** PLAT and **ID:** 0131

SNMP Trap ID:

Automatically notify Support: No

User response: This is a UEFI detected event. The UEFI diagnostic code for this event can be found in the logged IMM message text. Please refer to the UEFI diagnostic code in the "UEFI diagnostic code" section of the Information Center for the appropriate user response.

806f040c-2024ffff [PhysicalMemoryElementName] Disabled on Subsystem [MemoryElementName].

Explanation: This message is for the use case when an implementation has detected that Memory has been Disabled.

May also be shown as 806f040c2024ffff or 0x806f040c2024ffff

Severity: Info

Alert Category: System - Other

Serviceable: No

CIM Information: **Prefix:** PLAT and **ID:** 0131

SNMP Trap ID:

Automatically notify Support: No

User response: This is a UEFI detected event. The UEFI diagnostic code for this event can be found in the logged IMM message text. Please refer to the UEFI diagnostic code in the "UEFI diagnostic code" section of the Information Center for the appropriate user response.

806f040c-2025ffff [PhysicalMemoryElementName] Disabled on Subsystem [MemoryElementName].

Explanation: This message is for the use case when an implementation has detected that Memory has been Disabled.

May also be shown as 806f040c2025ffff or 0x806f040c2025ffff

Severity: Info

Alert Category: System - Other

Serviceable: No

CIM Information: **Prefix:** PLAT and **ID:** 0131

SNMP Trap ID:

Automatically notify Support: No

User response: This is a UEFI detected event. The UEFI diagnostic code for this event can be found in the logged IMM message text. Please refer to the UEFI diagnostic code in the "UEFI diagnostic code" section of the Information Center for the appropriate user response.

806f040c-2026ffff [PhysicalMemoryElementName] Disabled on Subsystem [MemoryElementName].

Explanation: This message is for the use case when an implementation has detected that Memory has been Disabled.

May also be shown as 806f040c2026ffff or 0x806f040c2026ffff

Severity: Info

Alert Category: System - Other

Serviceable: No

CIM Information: **Prefix:** PLAT and **ID:** 0131

SNMP Trap ID:

Automatically notify Support: No

User response: This is a UEFI detected event. The UEFI diagnostic code for this event can be found in the logged IMM message text. Please refer to the UEFI diagnostic code in the "UEFI diagnostic code" section of the Information Center for the appropriate user response.

806f040c-2027ffff [PhysicalMemoryElementName] Disabled on Subsystem [MemoryElementName].

Explanation: This message is for the use case when an implementation has detected that Memory has been Disabled.

May also be shown as 806f040c2027ffff or 0x806f040c2027ffff

Severity: Info

Alert Category: System - Other

Serviceable: No

CIM Information: **Prefix:** PLAT and **ID:** 0131

SNMP Trap ID:

Automatically notify Support: No

User response: This is a UEFI detected event. The UEFI diagnostic code for this event can be found in the logged IMM message text. Please refer to the UEFI diagnostic code in the "UEFI diagnostic code" section of the Information Center for the appropriate user response.

806f040c-2028ffff [PhysicalMemoryElementName] Disabled on Subsystem [MemoryElementName].

Explanation: This message is for the use case when an implementation has detected that Memory has been Disabled.

May also be shown as 806f040c2028ffff or 0x806f040c2028ffff

Severity: Info

Alert Category: System - Other

Serviceable: No

CIM Information: **Prefix:** PLAT and **ID:** 0131

SNMP Trap ID:

Automatically notify Support: No

User response: This is a UEFI detected event. The UEFI diagnostic code for this event can be found in the logged IMM message text. Please refer to the UEFI diagnostic code in the "UEFI diagnostic code" section of the Information Center for the appropriate user response.

806f040c-2029ffff [PhysicalMemoryElementName] Disabled on Subsystem [MemoryElementName].

Explanation: This message is for the use case when an implementation has detected that Memory has been Disabled.

May also be shown as 806f040c2029ffff or 0x806f040c2029ffff

Severity: Info

Alert Category: System - Other

Serviceable: No

CIM Information: **Prefix:** PLAT and **ID:** 0131

SNMP Trap ID:

Automatically notify Support: No

User response: This is a UEFI detected event. The UEFI diagnostic code for this event can be found in the logged IMM message text. Please refer to the UEFI diagnostic code in the "UEFI diagnostic code" section of the Information Center for the appropriate user response.

806f040c-202affff [PhysicalMemoryElementName] Disabled on Subsystem [MemoryElementName].

Explanation: This message is for the use case when an implementation has detected that Memory has been Disabled.

May also be shown as 806f040c202affff or 0x806f040c202affff

Severity: Info

Alert Category: System - Other

Serviceable: No

CIM Information: **Prefix:** PLAT and **ID:** 0131

SNMP Trap ID:

Automatically notify Support: No

User response: This is a UEFI detected event. The UEFI diagnostic code for this event can be found in the logged IMM message text. Please refer to the UEFI diagnostic code in the "UEFI diagnostic code" section of the Information Center for the appropriate user response.

806f040c-202bffff [PhysicalMemoryElementName] Disabled on Subsystem [MemoryElementName].

Explanation: This message is for the use case when an implementation has detected that Memory has been Disabled.

May also be shown as 806f040c202bffff or 0x806f040c202bffff

Severity: Info

Alert Category: System - Other

Serviceable: No

CIM Information: **Prefix:** PLAT and **ID:** 0131

SNMP Trap ID:

Automatically notify Support: No

User response: This is a UEFI detected event. The UEFI diagnostic code for this event can be found in the logged IMM message text. Please refer to the UEFI diagnostic code in the "UEFI diagnostic code" section of the Information Center for the appropriate user response.

806f040c-202cffff [PhysicalMemoryElementName] Disabled on Subsystem [MemoryElementName].

Explanation: This message is for the use case when an implementation has detected that Memory has been Disabled.

May also be shown as 806f040c202cffff or 0x806f040c202cffff

Severity: Info

Alert Category: System - Other

Serviceable: No

CIM Information: **Prefix:** PLAT and **ID:** 0131

SNMP Trap ID:

Automatically notify Support: No

User response: This is a UEFI detected event. The UEFI diagnostic code for this event can be found in the logged IMM message text. Please refer to the UEFI diagnostic code in the "UEFI diagnostic code" section of the Information Center for the appropriate user response.

806f040c-202dffff [PhysicalMemoryElementName] Disabled on Subsystem [MemoryElementName].

Explanation: This message is for the use case when an implementation has detected that Memory has been Disabled.

May also be shown as 806f040c202dffff or 0x806f040c202dffff

Severity: Info

Alert Category: System - Other

Serviceable: No

CIM Information: **Prefix:** PLAT and **ID:** 0131

SNMP Trap ID:

Automatically notify Support: No

User response: This is a UEFI detected event. The UEFI diagnostic code for this event can be found in the logged IMM message text. Please refer to the UEFI diagnostic code in the "UEFI diagnostic code" section of the Information Center for the appropriate user response.

806f040c-202effff [PhysicalMemoryElementName] Disabled on Subsystem [MemoryElementName].

Explanation: This message is for the use case when an implementation has detected that Memory has been Disabled.

May also be shown as 806f040c202effff or 0x806f040c202effff

Severity: Info

Alert Category: System - Other

Serviceable: No

CIM Information: **Prefix:** PLAT and **ID:** 0131

SNMP Trap ID:

Automatically notify Support: No

User response: This is a UEFI detected event. The UEFI diagnostic code for this event can be found in the logged IMM message text. Please refer to the UEFI diagnostic code in the "UEFI diagnostic code" section of the Information Center for the appropriate user response.

806f040c-202fffff [PhysicalMemoryElementName] Disabled on Subsystem [MemoryElementName].

Explanation: This message is for the use case when an implementation has detected that Memory has been Disabled.

May also be shown as 806f040c202fffff or 0x806f040c202fffff

Severity: Info

Alert Category: System - Other

Serviceable: No

CIM Information: **Prefix:** PLAT and **ID:** 0131

SNMP Trap ID:

Automatically notify Support: No

User response: This is a UEFI detected event. The UEFI diagnostic code for this event can be found in the logged IMM message text. Please refer to the UEFI diagnostic code in the "UEFI diagnostic code" section of the Information Center for the appropriate user response.

806f040c-2030ffff [PhysicalMemoryElementName] Disabled on Subsystem [MemoryElementName].

Explanation: This message is for the use case when an implementation has detected that Memory has been Disabled.

May also be shown as 806f040c2030ffff or 0x806f040c2030ffff

Severity: Info

Alert Category: System - Other

Serviceable: No

CIM Information: **Prefix:** PLAT and **ID:** 0131

SNMP Trap ID:

Automatically notify Support: No

User response: This is a UEFI detected event. The UEFI diagnostic code for this event can be found in the logged IMM message text. Please refer to the UEFI diagnostic code in the "UEFI diagnostic code" section of the Information Center for the appropriate user response.

806f040c-2581ffff [PhysicalMemoryElementName] Disabled on Subsystem [MemoryElementName].

Explanation: This message is for the use case when an implementation has detected that Memory has been Disabled. All DIMMs. One of the DIMMs.

May also be shown as 806f040c2581ffff or 0x806f040c2581ffff

Severity: Info

Alert Category: System - Other

Serviceable: No

CIM Information: **Prefix:** PLAT and **ID:** 0131

SNMP Trap ID:

Automatically notify Support: No

User response: This is a UEFI detected event. The UEFI diagnostic code for this event can be found in the logged IMM message text. Please refer to the UEFI diagnostic code in the "UEFI diagnostic code" section of the Information Center for the appropriate user response.

806f0413-2582ffff A PCI PERR has occurred on system [ComputerSystemElementName].

Explanation: This message is for the use case when an PCI Parity Error (PERR) occurred on one of these sensors: All PCI Error, One of PCI Error, PCIs.

May also be shown as 806f04132582ffff or 0x806f04132582ffff

Severity: Error

Alert Category: Critical - Other

Serviceable: Yes

CIM Information: **Prefix:** PLAT and **ID:** 0232

SNMP Trap ID: 50

Automatically notify Support: No

User response: This is a UEFI detected event. The UEFI diagnostic code for this event can be found in the logged IMM message text. Please refer to the UEFI diagnostic code in the "UEFI diagnostic code" section of the Information Center for the appropriate user response.

806f0507-0301ffff CPU 1 has a Configuration Mismatch.

Explanation: This message is for the use case when an implementation has detected a Processor Configuration Mismatch has occurred.

May also be shown as 806f05070301ffff or 0x806f05070301ffff

Severity: Error

Alert Category: Critical - CPU

Serviceable: Yes

CIM Information: **Prefix:** PLAT and **ID:** 0062

SNMP Trap ID: 40

Automatically notify Support: No

User response: This is a UEFI detected event. The UEFI diagnostic code for this event can be found in the logged IMM message text. Please refer to the UEFI diagnostic code in the "UEFI diagnostic code" section of the Information Center for the appropriate user response.

806f0507-0302ffff CPU 2 has a Configuration Mismatch.

Explanation: This message is for the use case when an implementation has detected a Processor Configuration Mismatch has occurred.

May also be shown as 806f05070302ffff or 0x806f05070302ffff

Severity: Error

Alert Category: Critical - CPU

Serviceable: Yes

CIM Information: **Prefix:** PLAT and **ID:** 0062

SNMP Trap ID: 40

Automatically notify Support: No

User response: This is a UEFI detected event. The UEFI diagnostic code for this event can be found in the logged IMM message text. Please refer to the UEFI diagnostic code in the "UEFI diagnostic code" section of the Information Center for the appropriate user response.

806f0507-0303ffff CPU 3 has a Configuration Mismatch.

Explanation: This message is for the use case when an implementation has detected a Processor Configuration Mismatch has occurred.

May also be shown as 806f05070303ffff or 0x806f05070303ffff

Severity: Error

Alert Category: Critical - CPU

Serviceable: Yes

CIM Information: **Prefix:** PLAT and **ID:** 0062

SNMP Trap ID: 40

Automatically notify Support: No

User response: This is a UEFI detected event. The UEFI diagnostic code for this event can be found in the logged IMM message text. Please refer to the UEFI diagnostic code in the "UEFI diagnostic code" section of the Information Center for the appropriate user response.

806f0507-0304ffff CPU 4 has a Configuration Mismatch.

Explanation: This message is for the use case when an implementation has detected a Processor Configuration Mismatch has occurred.

May also be shown as 806f05070304ffff or 0x806f05070304ffff

Severity: Error

Alert Category: Critical - CPU

Serviceable: Yes

CIM Information: **Prefix:** PLAT and **ID:** 0062

SNMP Trap ID: 40

Automatically notify Support: No

User response: This is a UEFI detected event. The UEFI diagnostic code for this event can be found in the logged IMM message text. Please refer to the UEFI diagnostic code in the "UEFI diagnostic code" section of the Information Center for the appropriate user response.

806f0507-2584ffff [ProcessorElementName] has a Configuration Mismatch.

Explanation: This message is for the use case when an implementation has detected a Processor Configuration Mismatch has occurred. All CPUs. One of CPUs.

May also be shown as 806f05072584ffff or 0x806f05072584ffff

Severity: Error

Alert Category: Critical - CPU

Serviceable: Yes

CIM Information: **Prefix:** PLAT and **ID:** 0062

SNMP Trap ID: 40

Automatically notify Support: No

User response: This is a UEFI detected event. The UEFI diagnostic code for this event can be found in the logged IMM message text. Please refer to the UEFI diagnostic code in the "UEFI diagnostic code" section of the Information Center for the appropriate user response.

806f050c-2001ffff Memory Logging Limit Reached for [PhysicalMemoryElementName] on Subsystem [MemoryElementName].

Explanation: This message is for the use case when an implementation has detected that the Memory Logging Limit has been Reached.

May also be shown as 806f050c2001ffff or 0x806f050c2001ffff

Severity: Warning

Alert Category: Critical - Memory

Serviceable: Yes

CIM Information: **Prefix:** PLAT and **ID:** 0144

SNMP Trap ID: 41

Automatically notify Support: Yes

User response: This is a UEFI detected event. The UEFI diagnostic code for this event can be found in the logged IMM message text. Please refer to the UEFI diagnostic code in the "UEFI diagnostic code" section of the Information Center for the appropriate user response.

806f050c-2002ffff Memory Logging Limit Reached for [PhysicalMemoryElementName] on Subsystem [MemoryElementName].

Explanation: This message is for the use case when an implementation has detected that the Memory Logging Limit has been Reached.

May also be shown as 806f050c2002ffff or 0x806f050c2002ffff

Severity: Warning

Alert Category: Critical - Memory

Serviceable: Yes

CIM Information: **Prefix:** PLAT and **ID:** 0144

SNMP Trap ID: 41

Automatically notify Support: Yes

User response: This is a UEFI detected event. The UEFI diagnostic code for this event can be found in the logged IMM message text. Please refer to the UEFI diagnostic code in the "UEFI diagnostic code" section of the Information Center for the appropriate user response.

806f050c-2003ffff Memory Logging Limit Reached for [PhysicalMemoryElementName] on Subsystem [MemoryElementName].

Explanation: This message is for the use case when an implementation has detected that the Memory Logging Limit has been Reached.

May also be shown as 806f050c2003ffff or 0x806f050c2003ffff

Severity: Warning

Alert Category: Critical - Memory

Serviceable: Yes

CIM Information: **Prefix:** PLAT and **ID:** 0144

SNMP Trap ID: 41

Automatically notify Support: Yes

User response: This is a UEFI detected event. The UEFI diagnostic code for this event can be found in the logged IMM message text. Please refer to the UEFI diagnostic code in the "UEFI diagnostic code" section of the Information Center for the appropriate user response.

806f050c-2004ffff Memory Logging Limit Reached for [PhysicalMemoryElementName] on Subsystem [MemoryElementName].

Explanation: This message is for the use case when an implementation has detected that the Memory Logging Limit has been Reached.

May also be shown as 806f050c2004ffff or 0x806f050c2004ffff

Severity: Warning

Alert Category: Critical - Memory

Serviceable: Yes

CIM Information: **Prefix:** PLAT and **ID:** 0144

SNMP Trap ID: 41

Automatically notify Support: Yes

User response: This is a UEFI detected event. The UEFI diagnostic code for this event can be found in the logged IMM message text. Please refer to the UEFI diagnostic code in the "UEFI diagnostic code" section of the Information Center for the appropriate user response.

806f050c-2005ffff Memory Logging Limit Reached for [PhysicalMemoryElementName] on Subsystem [MemoryElementName].

Explanation: This message is for the use case when an implementation has detected that the Memory Logging Limit has been Reached.

May also be shown as 806f050c2005ffff or 0x806f050c2005ffff

Severity: Warning

Alert Category: Critical - Memory

Serviceable: Yes

CIM Information: **Prefix:** PLAT and **ID:** 0144

SNMP Trap ID: 41

Automatically notify Support: Yes

User response: This is a UEFI detected event. The UEFI diagnostic code for this event can be found in the logged IMM message text. Please refer to the UEFI diagnostic code in the "UEFI diagnostic code" section of the Information Center for the appropriate user response.

806f050c-2006ffff Memory Logging Limit Reached for [PhysicalMemoryElementName] on Subsystem [MemoryElementName].

Explanation: This message is for the use case when an implementation has detected that the Memory Logging Limit has been Reached.

May also be shown as 806f050c2006ffff or 0x806f050c2006ffff

Severity: Warning

Alert Category: Critical - Memory

Serviceable: Yes

CIM Information: **Prefix:** PLAT and **ID:** 0144

SNMP Trap ID: 41

Automatically notify Support: Yes

User response: This is a UEFI detected event. The UEFI diagnostic code for this event can be found in the logged IMM message text. Please refer to the UEFI diagnostic code in the "UEFI diagnostic code" section of the Information Center for the appropriate user response.

806f050c-2007ffff Memory Logging Limit Reached for [PhysicalMemoryElementName] on Subsystem [MemoryElementName].

Explanation: This message is for the use case when an implementation has detected that the Memory Logging Limit has been Reached.

May also be shown as 806f050c2007ffff or 0x806f050c2007ffff

Severity: Warning

Alert Category: Critical - Memory

Serviceable: Yes

CIM Information: **Prefix:** PLAT and **ID:** 0144

SNMP Trap ID: 41

Automatically notify Support: Yes

User response: This is a UEFI detected event. The UEFI diagnostic code for this event can be found in the logged IMM message text. Please refer to the UEFI diagnostic code in the "UEFI diagnostic code" section of the Information Center for the appropriate user response.

806f050c-2008ffff Memory Logging Limit Reached for [PhysicalMemoryElementName] on Subsystem [MemoryElementName].

Explanation: This message is for the use case when an implementation has detected that the Memory Logging Limit has been Reached.

May also be shown as 806f050c2008ffff or 0x806f050c2008ffff

Severity: Warning

Alert Category: Critical - Memory

Serviceable: Yes

CIM Information: **Prefix:** PLAT and **ID:** 0144

SNMP Trap ID: 41

Automatically notify Support: Yes

User response: This is a UEFI detected event. The UEFI diagnostic code for this event can be found in the logged IMM message text. Please refer to the UEFI diagnostic code in the "UEFI diagnostic code" section of the Information Center for the appropriate user response.

806f050c-2009ffff Memory Logging Limit Reached for [PhysicalMemoryElementName] on Subsystem [MemoryElementName].

Explanation: This message is for the use case when an implementation has detected that the Memory Logging Limit has been Reached.

May also be shown as 806f050c2009ffff or 0x806f050c2009ffff

Severity: Warning

Alert Category: Critical - Memory

Serviceable: Yes

CIM Information: **Prefix:** PLAT and **ID:** 0144

SNMP Trap ID: 41

Automatically notify Support: Yes

User response: This is a UEFI detected event. The UEFI diagnostic code for this event can be found in the logged IMM message text. Please refer to the UEFI diagnostic code in the "UEFI diagnostic code" section of the Information Center for the appropriate user response.

806f050c-200affff Memory Logging Limit Reached for [PhysicalMemoryElementName] on Subsystem [MemoryElementName].

Explanation: This message is for the use case when an implementation has detected that the Memory Logging Limit has been Reached.

May also be shown as 806f050c200affff or 0x806f050c200affff

Severity: Warning

Alert Category: Critical - Memory

Serviceable: Yes

CIM Information: **Prefix:** PLAT and **ID:** 0144

SNMP Trap ID: 41

Automatically notify Support: Yes

User response: This is a UEFI detected event. The UEFI diagnostic code for this event can be found in the logged IMM message text. Please refer to the UEFI diagnostic code in the "UEFI diagnostic code" section of the Information Center for the appropriate user response.

806f050c-200bffff Memory Logging Limit Reached for [PhysicalMemoryElementName] on Subsystem [MemoryElementName].

Explanation: This message is for the use case when an implementation has detected that the Memory Logging Limit has been Reached.

May also be shown as 806f050c200bffff or 0x806f050c200bffff

Severity: Warning

Alert Category: Critical - Memory

Serviceable: Yes

CIM Information: **Prefix:** PLAT and **ID:** 0144

SNMP Trap ID: 41

Automatically notify Support: Yes

User response: This is a UEFI detected event. The UEFI diagnostic code for this event can be found in the logged IMM message text. Please refer to the UEFI diagnostic code in the "UEFI diagnostic code" section of the Information Center for the appropriate user response.

806f050c-200cffff Memory Logging Limit Reached for [PhysicalMemoryElementName] on Subsystem [MemoryElementName].

Explanation: This message is for the use case when an implementation has detected that the Memory Logging Limit has been Reached.

May also be shown as 806f050c200cffff or 0x806f050c200cffff

Severity: Warning

Alert Category: Critical - Memory

Serviceable: Yes

CIM Information: **Prefix:** PLAT and **ID:** 0144

SNMP Trap ID: 41

Automatically notify Support: Yes

User response: This is a UEFI detected event. The UEFI diagnostic code for this event can be found in the logged IMM message text. Please refer to the UEFI diagnostic code in the "UEFI diagnostic code" section of the Information Center for the appropriate user response.

806f050c-200dffff Memory Logging Limit Reached for [PhysicalMemoryElementName] on Subsystem [MemoryElementName].

Explanation: This message is for the use case when an implementation has detected that the Memory Logging Limit has been Reached.

May also be shown as 806f050c200dffff or 0x806f050c200dffff

Severity: Warning

Alert Category: Critical - Memory

Serviceable: Yes

CIM Information: **Prefix:** PLAT and **ID:** 0144

SNMP Trap ID: 41

Automatically notify Support: Yes

User response: This is a UEFI detected event. The UEFI diagnostic code for this event can be found in the logged IMM message text. Please refer to the UEFI diagnostic code in the "UEFI diagnostic code" section of the Information Center for the appropriate user response.

806f050c-200effff Memory Logging Limit Reached for [PhysicalMemoryElementName] on Subsystem [MemoryElementName].

Explanation: This message is for the use case when an implementation has detected that the Memory Logging Limit has been Reached.

May also be shown as 806f050c200effff or 0x806f050c200effff

Severity: Warning

Alert Category: Critical - Memory

Serviceable: Yes

CIM Information: **Prefix:** PLAT and **ID:** 0144

SNMP Trap ID: 41

Automatically notify Support: Yes

User response: This is a UEFI detected event. The UEFI diagnostic code for this event can be found in the logged IMM message text. Please refer to the UEFI diagnostic code in the "UEFI diagnostic code" section of the Information Center for the appropriate user response.

806f050c-200fffff Memory Logging Limit Reached for [PhysicalMemoryElementName] on Subsystem [MemoryElementName].

Explanation: This message is for the use case when an implementation has detected that the Memory Logging Limit has been Reached.

May also be shown as 806f050c200fffff or 0x806f050c200fffff

Severity: Warning

Alert Category: Critical - Memory

Serviceable: Yes

CIM Information: **Prefix:** PLAT and **ID:** 0144

SNMP Trap ID: 41

Automatically notify Support: Yes

User response: This is a UEFI detected event. The UEFI diagnostic code for this event can be found in the logged IMM message text. Please refer to the UEFI diagnostic code in the "UEFI diagnostic code" section of the Information Center for the appropriate user response.

806f050c-2010ffff Memory Logging Limit Reached for [PhysicalMemoryElementName] on Subsystem [MemoryElementName].

Explanation: This message is for the use case when an implementation has detected that the Memory Logging Limit has been Reached.

May also be shown as 806f050c2010ffff or 0x806f050c2010ffff

Severity: Warning

Alert Category: Critical - Memory

Serviceable: Yes

CIM Information: **Prefix:** PLAT and **ID:** 0144

SNMP Trap ID: 41

Automatically notify Support: Yes

User response: This is a UEFI detected event. The UEFI diagnostic code for this event can be found in the logged IMM message text. Please refer to the UEFI diagnostic code in the "UEFI diagnostic code" section of the Information Center for the appropriate user response.

806f050c-2011ffff Memory Logging Limit Reached for [PhysicalMemoryElementName] on Subsystem [MemoryElementName].

Explanation: This message is for the use case when an implementation has detected that the Memory Logging Limit has been Reached.

May also be shown as 806f050c2011ffff or 0x806f050c2011ffff

Severity: Warning

Alert Category: Critical - Memory

Serviceable: Yes

CIM Information: **Prefix:** PLAT and **ID:** 0144

SNMP Trap ID: 41

Automatically notify Support: Yes

User response: This is a UEFI detected event. The UEFI diagnostic code for this event can be found in the logged IMM message text. Please refer to the UEFI diagnostic code in the "UEFI diagnostic code" section of the Information Center for the appropriate user response.

806f050c-2012ffff Memory Logging Limit Reached for [PhysicalMemoryElementName] on Subsystem [MemoryElementName].

Explanation: This message is for the use case when an implementation has detected that the Memory Logging Limit has been Reached.

May also be shown as 806f050c2012ffff or 0x806f050c2012ffff

Severity: Warning

Alert Category: Critical - Memory

Serviceable: Yes

CIM Information: **Prefix:** PLAT and **ID:** 0144

SNMP Trap ID: 41

Automatically notify Support: Yes

User response: This is a UEFI detected event. The UEFI diagnostic code for this event can be found in the logged IMM message text. Please refer to the UEFI diagnostic code in the "UEFI diagnostic code" section of the Information Center for the appropriate user response.

806f050c-2013ffff Memory Logging Limit Reached for [PhysicalMemoryElementName] on Subsystem [MemoryElementName].

Explanation: This message is for the use case when an implementation has detected that the Memory Logging Limit has been Reached.

May also be shown as 806f050c2013ffff or 0x806f050c2013ffff

Severity: Warning

Alert Category: Critical - Memory

Serviceable: Yes

CIM Information: **Prefix:** PLAT and **ID:** 0144

SNMP Trap ID: 41

Automatically notify Support: Yes

User response: This is a UEFI detected event. The UEFI diagnostic code for this event can be found in the logged IMM message text. Please refer to the UEFI diagnostic code in the "UEFI diagnostic code" section of the Information Center for the appropriate user response.

806f050c-2014ffff Memory Logging Limit Reached for [PhysicalMemoryElementName] on Subsystem [MemoryElementName].

Explanation: This message is for the use case when an implementation has detected that the Memory Logging Limit has been Reached.

May also be shown as 806f050c2014ffff or 0x806f050c2014ffff

Severity: Warning

Alert Category: Critical - Memory

Serviceable: Yes

CIM Information: **Prefix:** PLAT and **ID:** 0144

SNMP Trap ID: 41

Automatically notify Support: Yes

User response: This is a UEFI detected event. The UEFI diagnostic code for this event can be found in the logged IMM message text. Please refer to the UEFI diagnostic code in the "UEFI diagnostic code" section of the Information Center for the appropriate user response.

806f050c-2015ffff Memory Logging Limit Reached for [PhysicalMemoryElementName] on Subsystem [MemoryElementName].

Explanation: This message is for the use case when an implementation has detected that the Memory Logging Limit has been Reached.

May also be shown as 806f050c2015ffff or 0x806f050c2015ffff

Severity: Warning

Alert Category: Critical - Memory

Serviceable: Yes

CIM Information: **Prefix:** PLAT and **ID:** 0144

SNMP Trap ID: 41

Automatically notify Support: Yes

User response: This is a UEFI detected event. The UEFI diagnostic code for this event can be found in the logged IMM message text. Please refer to the UEFI diagnostic code in the "UEFI diagnostic code" section of the Information Center for the appropriate user response.

806f050c-2016ffff Memory Logging Limit Reached for [PhysicalMemoryElementName] on Subsystem [MemoryElementName].

Explanation: This message is for the use case when an implementation has detected that the Memory Logging Limit has been Reached.

May also be shown as 806f050c2016ffff or 0x806f050c2016ffff

Severity: Warning

Alert Category: Critical - Memory

Serviceable: Yes

CIM Information: **Prefix:** PLAT and **ID:** 0144

SNMP Trap ID: 41

Automatically notify Support: Yes

User response: This is a UEFI detected event. The UEFI diagnostic code for this event can be found in the logged IMM message text. Please refer to the UEFI diagnostic code in the "UEFI diagnostic code" section of the Information Center for the appropriate user response.

806f050c-2017ffff Memory Logging Limit Reached for [PhysicalMemoryElementName] on Subsystem [MemoryElementName].

Explanation: This message is for the use case when an implementation has detected that the Memory Logging Limit has been Reached.

May also be shown as 806f050c2017ffff or 0x806f050c2017ffff

Severity: Warning

Alert Category: Critical - Memory

Serviceable: Yes

CIM Information: **Prefix:** PLAT and **ID:** 0144

SNMP Trap ID: 41

Automatically notify Support: Yes

User response: This is a UEFI detected event. The UEFI diagnostic code for this event can be found in the logged IMM message text. Please refer to the UEFI diagnostic code in the "UEFI diagnostic code" section of the Information Center for the appropriate user response.

806f050c-2018ffff Memory Logging Limit Reached for [PhysicalMemoryElementName] on Subsystem [MemoryElementName].

Explanation: This message is for the use case when an implementation has detected that the Memory Logging Limit has been Reached.

May also be shown as 806f050c2018ffff or 0x806f050c2018ffff

Severity: Warning

Alert Category: Critical - Memory

Serviceable: Yes

CIM Information: **Prefix:** PLAT and **ID:** 0144

SNMP Trap ID: 41

Automatically notify Support: Yes

User response: This is a UEFI detected event. The UEFI diagnostic code for this event can be found in the logged IMM message text. Please refer to the UEFI diagnostic code in the "UEFI diagnostic code" section of the Information Center for the appropriate user response.

806f050c-2019ffff Memory Logging Limit Reached for [PhysicalMemoryElementName] on Subsystem [MemoryElementName].

Explanation: This message is for the use case when an implementation has detected that the Memory Logging Limit has been Reached.

May also be shown as 806f050c2019ffff or 0x806f050c2019ffff

Severity: Warning

Alert Category: Critical - Memory

Serviceable: Yes

CIM Information: **Prefix:** PLAT and **ID:** 0144

SNMP Trap ID: 41

Automatically notify Support: Yes

User response: This is a UEFI detected event. The UEFI diagnostic code for this event can be found in the logged IMM message text. Please refer to the UEFI diagnostic code in the "UEFI diagnostic code" section of the Information Center for the appropriate user response.

806f050c-201affff Memory Logging Limit Reached for [PhysicalMemoryElementName] on Subsystem [MemoryElementName].

Explanation: This message is for the use case when an implementation has detected that the Memory Logging Limit has been Reached.

May also be shown as 806f050c201affff or 0x806f050c201affff

Severity: Warning

Alert Category: Critical - Memory

Serviceable: Yes

CIM Information: **Prefix:** PLAT and **ID:** 0144

SNMP Trap ID: 41

Automatically notify Support: Yes

User response: This is a UEFI detected event. The UEFI diagnostic code for this event can be found in the logged IMM message text. Please refer to the UEFI diagnostic code in the "UEFI diagnostic code" section of the Information Center for the appropriate user response.

806f050c-201bffff Memory Logging Limit Reached for [PhysicalMemoryElementName] on Subsystem [MemoryElementName].

Explanation: This message is for the use case when an implementation has detected that the Memory Logging Limit has been Reached.

May also be shown as 806f050c201bffff or 0x806f050c201bffff

Severity: Warning

Alert Category: Critical - Memory

Serviceable: Yes

CIM Information: **Prefix:** PLAT and **ID:** 0144

SNMP Trap ID: 41

Automatically notify Support: Yes

User response: This is a UEFI detected event. The UEFI diagnostic code for this event can be found in the logged IMM message text. Please refer to the UEFI diagnostic code in the "UEFI diagnostic code" section of the Information Center for the appropriate user response.

806f050c-201cffff Memory Logging Limit Reached for [PhysicalMemoryElementName] on Subsystem [MemoryElementName].

Explanation: This message is for the use case when an implementation has detected that the Memory Logging Limit has been Reached.

May also be shown as 806f050c201cffff or 0x806f050c201cffff

Severity: Warning

Alert Category: Critical - Memory

Serviceable: Yes

CIM Information: **Prefix:** PLAT and **ID:** 0144

SNMP Trap ID: 41

Automatically notify Support: Yes

User response: This is a UEFI detected event. The UEFI diagnostic code for this event can be found in the logged IMM message text. Please refer to the UEFI diagnostic code in the "UEFI diagnostic code" section of the Information Center for the appropriate user response.

806f050c-201dffff Memory Logging Limit Reached for [PhysicalMemoryElementName] on Subsystem [MemoryElementName].

Explanation: This message is for the use case when an implementation has detected that the Memory Logging Limit has been Reached.

May also be shown as 806f050c201dffff or 0x806f050c201dffff

Severity: Warning

Alert Category: Critical - Memory

Serviceable: Yes

CIM Information: **Prefix:** PLAT and **ID:** 0144

SNMP Trap ID: 41

Automatically notify Support: Yes

User response: This is a UEFI detected event. The UEFI diagnostic code for this event can be found in the logged IMM message text. Please refer to the UEFI diagnostic code in the "UEFI diagnostic code" section of the Information Center for the appropriate user response.

806f050c-201effff Memory Logging Limit Reached for [PhysicalMemoryElementName] on Subsystem [MemoryElementName].

Explanation: This message is for the use case when an implementation has detected that the Memory Logging Limit has been Reached.

May also be shown as 806f050c201effff or 0x806f050c201effff

Severity: Warning

Alert Category: Critical - Memory

Serviceable: Yes

CIM Information: **Prefix:** PLAT and **ID:** 0144

SNMP Trap ID: 41

Automatically notify Support: Yes

User response: This is a UEFI detected event. The UEFI diagnostic code for this event can be found in the logged IMM message text. Please refer to the UEFI diagnostic code in the "UEFI diagnostic code" section of the Information Center for the appropriate user response.

806f050c-201fffff Memory Logging Limit Reached for [PhysicalMemoryElementName] on Subsystem [MemoryElementName].

Explanation: This message is for the use case when an implementation has detected that the Memory Logging Limit has been Reached.

May also be shown as 806f050c201fffff or 0x806f050c201fffff

Severity: Warning

Alert Category: Critical - Memory

Serviceable: Yes

CIM Information: **Prefix:** PLAT and **ID:** 0144

SNMP Trap ID: 41

Automatically notify Support: Yes

User response: This is a UEFI detected event. The UEFI diagnostic code for this event can be found in the logged IMM message text. Please refer to the UEFI diagnostic code in the "UEFI diagnostic code" section of the Information Center for the appropriate user response.

806f050c-2020ffff Memory Logging Limit Reached for [PhysicalMemoryElementName] on Subsystem [MemoryElementName].

Explanation: This message is for the use case when an implementation has detected that the Memory Logging Limit has been Reached.

May also be shown as 806f050c2020ffff or 0x806f050c2020ffff

Severity: Warning

Alert Category: Critical - Memory

Serviceable: Yes

CIM Information: **Prefix:** PLAT and **ID:** 0144

SNMP Trap ID: 41

Automatically notify Support: Yes

User response: This is a UEFI detected event. The UEFI diagnostic code for this event can be found in the logged IMM message text. Please refer to the UEFI diagnostic code in the "UEFI diagnostic code" section of the Information Center for the appropriate user response.

806f050c-2021ffff Memory Logging Limit Reached for [PhysicalMemoryElementName] on Subsystem [MemoryElementName].

Explanation: This message is for the use case when an implementation has detected that the Memory Logging Limit has been Reached.

May also be shown as 806f050c2021ffff or 0x806f050c2021ffff

Severity: Warning

Alert Category: Critical - Memory

Serviceable: Yes

CIM Information: **Prefix:** PLAT and **ID:** 0144

SNMP Trap ID: 41

Automatically notify Support: Yes

User response: This is a UEFI detected event. The UEFI diagnostic code for this event can be found in the logged IMM message text. Please refer to the UEFI diagnostic code in the "UEFI diagnostic code" section of the Information Center for the appropriate user response.

806f050c-2022ffff Memory Logging Limit Reached for [PhysicalMemoryElementName] on Subsystem [MemoryElementName].

Explanation: This message is for the use case when an implementation has detected that the Memory Logging Limit has been Reached.

May also be shown as 806f050c2022ffff or 0x806f050c2022ffff

Severity: Warning

Alert Category: Critical - Memory

Serviceable: Yes

CIM Information: **Prefix:** PLAT and **ID:** 0144

SNMP Trap ID: 41

Automatically notify Support: Yes

User response: This is a UEFI detected event. The UEFI diagnostic code for this event can be found in the logged IMM message text. Please refer to the UEFI diagnostic code in the "UEFI diagnostic code" section of the Information Center for the appropriate user response.

806f050c-2023ffff Memory Logging Limit Reached for [PhysicalMemoryElementName] on Subsystem [MemoryElementName].

Explanation: This message is for the use case when an implementation has detected that the Memory Logging Limit has been Reached.

May also be shown as 806f050c2023ffff or 0x806f050c2023ffff

Severity: Warning

Alert Category: Critical - Memory

Serviceable: Yes

CIM Information: **Prefix:** PLAT and **ID:** 0144

SNMP Trap ID: 41

Automatically notify Support: Yes

User response: This is a UEFI detected event. The UEFI diagnostic code for this event can be found in the logged IMM message text. Please refer to the UEFI diagnostic code in the "UEFI diagnostic code" section of the Information Center for the appropriate user response.

806f050c-2024ffff Memory Logging Limit Reached for [PhysicalMemoryElementName] on Subsystem [MemoryElementName].

Explanation: This message is for the use case when an implementation has detected that the Memory Logging Limit has been Reached.

May also be shown as 806f050c2024ffff or 0x806f050c2024ffff

Severity: Warning

Alert Category: Critical - Memory

Serviceable: Yes

CIM Information: **Prefix:** PLAT and **ID:** 0144

SNMP Trap ID: 41

Automatically notify Support: Yes

User response: This is a UEFI detected event. The UEFI diagnostic code for this event can be found in the logged IMM message text. Please refer to the UEFI diagnostic code in the "UEFI diagnostic code" section of the Information Center for the appropriate user response.

806f050c-2025ffff Memory Logging Limit Reached for [PhysicalMemoryElementName] on Subsystem [MemoryElementName].

Explanation: This message is for the use case when an implementation has detected that the Memory Logging Limit has been Reached.

May also be shown as 806f050c2025ffff or 0x806f050c2025ffff

Severity: Warning

Alert Category: Critical - Memory

Serviceable: Yes

CIM Information: **Prefix:** PLAT and **ID:** 0144

SNMP Trap ID: 41

Automatically notify Support: Yes

User response: This is a UEFI detected event. The UEFI diagnostic code for this event can be found in the logged IMM message text. Please refer to the UEFI diagnostic code in the "UEFI diagnostic code" section of the Information Center for the appropriate user response.

806f050c-2026ffff Memory Logging Limit Reached for [PhysicalMemoryElementName] on Subsystem [MemoryElementName].

Explanation: This message is for the use case when an implementation has detected that the Memory Logging Limit has been Reached.

May also be shown as 806f050c2026ffff or 0x806f050c2026ffff

Severity: Warning

Alert Category: Critical - Memory

Serviceable: Yes

CIM Information: **Prefix:** PLAT and **ID:** 0144

SNMP Trap ID: 41

Automatically notify Support: Yes

User response: This is a UEFI detected event. The UEFI diagnostic code for this event can be found in the logged IMM message text. Please refer to the UEFI diagnostic code in the "UEFI diagnostic code" section of the Information Center for the appropriate user response.

806f050c-2027ffff Memory Logging Limit Reached for [PhysicalMemoryElementName] on Subsystem [MemoryElementName].

Explanation: This message is for the use case when an implementation has detected that the Memory Logging Limit has been Reached.

May also be shown as 806f050c2027ffff or 0x806f050c2027ffff

Severity: Warning

Alert Category: Critical - Memory

Serviceable: Yes

CIM Information: **Prefix:** PLAT and **ID:** 0144

SNMP Trap ID: 41

Automatically notify Support: Yes

User response: This is a UEFI detected event. The UEFI diagnostic code for this event can be found in the logged IMM message text. Please refer to the UEFI diagnostic code in the "UEFI diagnostic code" section of the Information Center for the appropriate user response.

806f050c-2028ffff Memory Logging Limit Reached for [PhysicalMemoryElementName] on Subsystem [MemoryElementName].

Explanation: This message is for the use case when an implementation has detected that the Memory Logging Limit has been Reached.

May also be shown as 806f050c2028ffff or 0x806f050c2028ffff

Severity: Warning

Alert Category: Critical - Memory

Serviceable: Yes

CIM Information: **Prefix:** PLAT and **ID:** 0144

SNMP Trap ID: 41

Automatically notify Support: Yes

User response: This is a UEFI detected event. The UEFI diagnostic code for this event can be found in the logged IMM message text. Please refer to the UEFI diagnostic code in the "UEFI diagnostic code" section of the Information Center for the appropriate user response.

806f050c-2029ffff Memory Logging Limit Reached for [PhysicalMemoryElementName] on Subsystem [MemoryElementName].

Explanation: This message is for the use case when an implementation has detected that the Memory Logging Limit has been Reached.

May also be shown as 806f050c2029ffff or 0x806f050c2029ffff

Severity: Warning

Alert Category: Critical - Memory

Serviceable: Yes

CIM Information: **Prefix:** PLAT and **ID:** 0144

SNMP Trap ID: 41

Automatically notify Support: Yes

User response: This is a UEFI detected event. The UEFI diagnostic code for this event can be found in the logged IMM message text. Please refer to the UEFI diagnostic code in the "UEFI diagnostic code" section of the Information Center for the appropriate user response.

806f050c-202affff Memory Logging Limit Reached for [PhysicalMemoryElementName] on Subsystem [MemoryElementName].

Explanation: This message is for the use case when an implementation has detected that the Memory Logging Limit has been Reached.

May also be shown as 806f050c202affff or 0x806f050c202affff

Severity: Warning

Alert Category: Critical - Memory

Serviceable: Yes

CIM Information: **Prefix:** PLAT and **ID:** 0144

SNMP Trap ID: 41

Automatically notify Support: Yes

User response: This is a UEFI detected event. The UEFI diagnostic code for this event can be found in the logged IMM message text. Please refer to the UEFI diagnostic code in the "UEFI diagnostic code" section of the Information Center for the appropriate user response.

806f050c-202bffff Memory Logging Limit Reached for [PhysicalMemoryElementName] on Subsystem [MemoryElementName].

Explanation: This message is for the use case when an implementation has detected that the Memory Logging Limit has been Reached.

May also be shown as 806f050c202bffff or 0x806f050c202bffff

Severity: Warning

Alert Category: Critical - Memory

Serviceable: Yes

CIM Information: **Prefix:** PLAT and **ID:** 0144

SNMP Trap ID: 41

Automatically notify Support: Yes

User response: This is a UEFI detected event. The UEFI diagnostic code for this event can be found in the logged IMM message text. Please refer to the UEFI diagnostic code in the "UEFI diagnostic code" section of the Information Center for the appropriate user response.

806f050c-202cffff Memory Logging Limit Reached for [PhysicalMemoryElementName] on Subsystem [MemoryElementName].

Explanation: This message is for the use case when an implementation has detected that the Memory Logging Limit has been Reached.

May also be shown as 806f050c202cffff or 0x806f050c202cffff

Severity: Warning

Alert Category: Critical - Memory

Serviceable: Yes

CIM Information: **Prefix:** PLAT and **ID:** 0144

SNMP Trap ID: 41

Automatically notify Support: Yes

User response: This is a UEFI detected event. The UEFI diagnostic code for this event can be found in the logged IMM message text. Please refer to the UEFI diagnostic code in the "UEFI diagnostic code" section of the Information Center for the appropriate user response.

806f050c-202dffff Memory Logging Limit Reached for [PhysicalMemoryElementName] on Subsystem [MemoryElementName].

Explanation: This message is for the use case when an implementation has detected that the Memory Logging Limit has been Reached.

May also be shown as 806f050c202dffff or 0x806f050c202dffff

Severity: Warning

Alert Category: Critical - Memory

Serviceable: Yes

CIM Information: **Prefix:** PLAT and **ID:** 0144

SNMP Trap ID: 41

Automatically notify Support: Yes

User response: This is a UEFI detected event. The UEFI diagnostic code for this event can be found in the logged IMM message text. Please refer to the UEFI diagnostic code in the "UEFI diagnostic code" section of the Information Center for the appropriate user response.

806f050c-202effff Memory Logging Limit Reached for [PhysicalMemoryElementName] on Subsystem [MemoryElementName].

Explanation: This message is for the use case when an implementation has detected that the Memory Logging Limit has been Reached.

May also be shown as 806f050c202effff or 0x806f050c202effff

Severity: Warning

Alert Category: Critical - Memory

Serviceable: Yes

CIM Information: **Prefix:** PLAT and **ID:** 0144

SNMP Trap ID: 41

Automatically notify Support: Yes

User response: This is a UEFI detected event. The UEFI diagnostic code for this event can be found in the logged IMM message text. Please refer to the UEFI diagnostic code in the "UEFI diagnostic code" section of the Information Center for the appropriate user response.

806f050c-202fffff Memory Logging Limit Reached for [PhysicalMemoryElementName] on Subsystem [MemoryElementName].

Explanation: This message is for the use case when an implementation has detected that the Memory Logging Limit has been Reached.

May also be shown as 806f050c202fffff or 0x806f050c202fffff

Severity: Warning

Alert Category: Critical - Memory

Serviceable: Yes

CIM Information: **Prefix:** PLAT and **ID:** 0144

SNMP Trap ID: 41

Automatically notify Support: Yes

User response: This is a UEFI detected event. The UEFI diagnostic code for this event can be found in the logged IMM message text. Please refer to the UEFI diagnostic code in the "UEFI diagnostic code" section of the Information Center for the appropriate user response.

806f050c-2030ffff Memory Logging Limit Reached for [PhysicalMemoryElementName] on Subsystem [MemoryElementName].

Explanation: This message is for the use case when an implementation has detected that the Memory Logging Limit has been Reached.

May also be shown as 806f050c2030ffff or 0x806f050c2030ffff

Severity: Warning

Alert Category: Critical - Memory

Serviceable: Yes

CIM Information: **Prefix:** PLAT and **ID:** 0144

SNMP Trap ID: 41

Automatically notify Support: Yes

User response: This is a UEFI detected event. The UEFI diagnostic code for this event can be found in the logged IMM message text. Please refer to the UEFI diagnostic code in the "UEFI diagnostic code" section of the Information Center for the appropriate user response.

806f050c-2581ffff Memory Logging Limit Reached for [PhysicalMemoryElementName] on Subsystem [MemoryElementName].

Explanation: This message is for the use case when an implementation has detected that the Memory Logging Limit has been Reached. All DIMMs. One of the DIMMs.

May also be shown as 806f050c2581ffff or 0x806f050c2581ffff

Severity: Warning

Alert Category: Critical - Memory

Serviceable: Yes

CIM Information: **Prefix:** PLAT and **ID:** 0144

SNMP Trap ID: 41

Automatically notify Support: Yes

User response: This is a UEFI detected event. The UEFI diagnostic code for this event can be found in the logged IMM message text. Please refer to the UEFI diagnostic code in the "UEFI diagnostic code" section of the Information Center for the appropriate user response.

806f050d-0400ffff Array [ComputerSystemElementName] is in critical condition.

Explanation: The RAID array is in critical condition. Immediate action is required to avoid a system outage.

May also be shown as 806f050d0400ffff or 0x806f050d0400ffff

Severity: Warning

Alert Category: Critical - Hard Disk drive

Serviceable: Yes

CIM Information: **Prefix:** PLAT and **ID:** 0174

SNMP Trap ID: 5

Automatically notify Support: No

User response: Replace the hard disk drive that is indicated by a lit status LED.

806f050d-0401ffff Array [ComputerSystemElementName] is in critical condition.

Explanation: The RAID array is in critical condition. Immediate action is required to avoid a system outage.

May also be shown as 806f050d0401ffff or 0x806f050d0401ffff

Severity: Error

Alert Category: Critical - Hard Disk drive

Serviceable: Yes

CIM Information: **Prefix:** PLAT and **ID:** 0174

SNMP Trap ID: 5

Automatically notify Support: No

User response: Replace the hard disk drive that is indicated by a lit status LED.

806f050d-0402ffff Array [ComputerSystemElementName] is in critical condition.

Explanation: The RAID array is in critical condition. Immediate action is required to avoid a system outage.

May also be shown as 806f050d0402ffff or 0x806f050d0402ffff

Severity: Error

Alert Category: Critical - Hard Disk drive

Serviceable: Yes

CIM Information: **Prefix:** PLAT and **ID:** 0174

SNMP Trap ID: 5

Automatically notify Support: No

User response: Replace the hard disk drive that is indicated by a lit status LED.

806f050d-0403ffff Array [ComputerSystemElementName] is in critical condition.

Explanation: The RAID array is in critical condition. Immediate action is required to avoid a system outage.

May also be shown as 806f050d0403ffff or 0x806f050d0403ffff

Severity: Error

Alert Category: Critical - Hard Disk drive

Serviceable: Yes

CIM Information: **Prefix:** PLAT and **ID:** 0174

SNMP Trap ID: 5

Automatically notify Support: No

User response: Replace the hard disk drive that is indicated by a lit status LED.

806f050d-0404ffff Array [ComputerSystemElementName] is in critical condition.

Explanation: The RAID array is in critical condition. Immediate action is required to avoid a system outage.

May also be shown as 806f050d0404ffff or 0x806f050d0404ffff

Severity: Error

Alert Category: Critical - Hard Disk drive

Serviceable: Yes

CIM Information: **Prefix:** PLAT and **ID:** 0174

SNMP Trap ID: 5

Automatically notify Support: No

User response: Replace the hard disk drive that is indicated by a lit status LED.

806f050d-0405ffff Array [ComputerSystemElementName] is in critical condition.

Explanation: The RAID array is in critical condition. Immediate action is required to avoid a system outage.

May also be shown as 806f050d0405ffff or 0x806f050d0405ffff

Severity: Error

Alert Category: Critical - Hard Disk drive

Serviceable: Yes

CIM Information: **Prefix:** PLAT and **ID:** 0174

SNMP Trap ID: 5

Automatically notify Support: No

User response: Replace the hard disk drive that is indicated by a lit status LED.

806f050d-0406ffff Array [ComputerSystemElementName] is in critical condition.

Explanation: The RAID array is in critical condition. Immediate action is required to avoid a system outage.

May also be shown as 806f050d0406ffff or 0x806f050d0406ffff

Severity: Error

Alert Category: Critical - Hard Disk drive

Serviceable: Yes

CIM Information: **Prefix:** PLAT and **ID:** 0174

SNMP Trap ID: 5

Automatically notify Support: No

User response: Replace the hard disk drive that is indicated by a lit status LED.

806f050d-0407ffff Array [ComputerSystemElementName] is in critical condition.

Explanation: The RAID array is in critical condition. Immediate action is required to avoid a system outage.

May also be shown as 806f050d0407ffff or 0x806f050d0407ffff

Severity: Error

Alert Category: Critical - Hard Disk drive

Serviceable: Yes

CIM Information: **Prefix:** PLAT and **ID:** 0174

SNMP Trap ID: 5

Automatically notify Support: No

User response: Replace the hard disk drive that is indicated by a lit status LED.

806f0513-2582ffff A PCI SERR has occurred on system [ComputerSystemElementName].

Explanation: IMM has detected a PCI System Error (SERR) on one of these sensors: All PCI Error, One of PCI Error, or PCIs

May also be shown as 806f05132582ffff or 0x806f05132582ffff

Severity: Error

Alert Category: Critical - Other

Serviceable: Yes

CIM Information: **Prefix:** PLAT and **ID:** 0234

SNMP Trap ID: 50

Automatically notify Support: No

User response: This is a UEFI detected event. The UEFI diagnostic code for this event can be found in the logged IMM message text. Please refer to the UEFI diagnostic code in the "UEFI diagnostic code" section of the Information Center for the appropriate user response.

806f052b-2101ffff Invalid or Unsupported firmware or software was detected on system [ComputerSystemElementName].

Explanation: The IMM primary firmware image has been corrupted. The IMM is running on the backup image.

May also be shown as 806f052b2101ffff or 0x806f052b2101ffff

Severity: Error

Alert Category: Critical - Other

Serviceable: Yes

CIM Information: **Prefix:** PLAT and **ID:** 0446

SNMP Trap ID: 50

Automatically notify Support: No

User response: Reflash or update the IMM firmware.

806f0607-0301ffff An SM BIOS Uncorrectable CPU complex error for CPU 1 has asserted.

Explanation: This message is for the use case when an SM BIOS Uncorrectable CPU complex error has asserted.

May also be shown as 806f06070301ffff or 0x806f06070301ffff

Severity: Error

Alert Category: Critical - CPU

Serviceable: Yes

CIM Information: **Prefix:** PLAT and **ID:** 0816

SNMP Trap ID: 40

Automatically notify Support: No

User response: This is a UEFI detected event. The UEFI diagnostic code for this event can be found in the logged IMM message text. Please refer to the UEFI diagnostic code in the "UEFI diagnostic code" section of the Information Center for the appropriate user response.

806f0607-0302ffff An SM BIOS Uncorrectable CPU complex error for CPU 2 has asserted.

Explanation: This message is for the use case when an SM BIOS Uncorrectable CPU complex error has asserted.

May also be shown as 806f06070302ffff or 0x806f06070302ffff

Severity: Error

Alert Category: Critical - CPU

Serviceable: Yes

CIM Information: **Prefix:** PLAT and **ID:** 0816

SNMP Trap ID: 40

Automatically notify Support: No

User response: This is a UEFI detected event. The UEFI diagnostic code for this event can be found in the logged IMM message text. Please refer to the UEFI diagnostic code in the "UEFI diagnostic code" section of the Information Center for the appropriate user response.

806f0607-0303ffff An SM BIOS Uncorrectable CPU complex error for CPU 3 has asserted.

Explanation: This message is for the use case when an SM BIOS Uncorrectable CPU complex error has asserted.

May also be shown as 806f06070303ffff or 0x806f06070303ffff

Severity: Error

Alert Category: Critical - CPU

Serviceable: Yes

CIM Information: **Prefix:** PLAT and **ID:** 0816

SNMP Trap ID: 40

Automatically notify Support: No

User response: This is a UEFI detected event. The UEFI diagnostic code for this event can be found in the logged IMM message text. Please refer to the UEFI diagnostic code in the "UEFI diagnostic code" section of the Information Center for the appropriate user response.

806f0607-0304ffff An SM BIOS Uncorrectable CPU complex error for CPU 4 has asserted.

Explanation: This message is for the use case when an SM BIOS Uncorrectable CPU complex error has asserted.

May also be shown as 806f06070304ffff or 0x806f06070304ffff

Severity: Error

Alert Category: Critical - CPU

Serviceable: Yes

CIM Information: **Prefix:** PLAT and **ID:** 0816

SNMP Trap ID: 40

Automatically notify Support: No

User response: This is a UEFI detected event. The UEFI diagnostic code for this event can be found in the logged IMM message text. Please refer to the UEFI diagnostic code in the "UEFI diagnostic code" section of the Information Center for the appropriate user response.

806f0607-2584ffff An SM BIOS Uncorrectable CPU complex error for [ProcessorElementName] has asserted.

Explanation: This message is for the use case when an SM BIOS Uncorrectable CPU complex error has asserted. All CPUs. One of CPUs.

May also be shown as 806f06072584ffff or 0x806f06072584ffff

Severity: Error

Alert Category: Critical - CPU

Serviceable: Yes

CIM Information: **Prefix:** PLAT and **ID:** 0816

SNMP Trap ID: 40

Automatically notify Support: No

User response: This is a UEFI detected event. The UEFI diagnostic code for this event can be found in the logged IMM message text. Please refer to the UEFI diagnostic code in the "UEFI diagnostic code" section of the Information Center for the appropriate user response.

806f060d-0400ffff Array [ComputerSystemElementName] has failed.

Explanation: The Drive 0 is part of an RAID array that is in the failed condition. To identify drives in the failed array all member drives will report this message.

May also be shown as 806f060d0400ffff or 0x806f060d0400ffff

Severity: Error

Alert Category: Critical - Hard Disk drive

Serviceable: Yes

CIM Information: **Prefix:** PLAT and **ID:** 0176

SNMP Trap ID: 5

Automatically notify Support: Yes

User response:

- Replace the hard disk drives that are indicated by a lit status LED on the drive.
- Recreate the array.
- Restore data from backup.

806f060d-0401ffff Array [ComputerSystemElementName] has failed.

Explanation: The Drive 1 is part of an RAID array that is in the failed condition. To identify drives in the failed array all member drives will report this message.

May also be shown as 806f060d0401ffff or 0x806f060d0401ffff

Severity: Error

Alert Category: Critical - Hard Disk drive

Serviceable: Yes

CIM Information: **Prefix:** PLAT and **ID:** 0176

SNMP Trap ID: 5

Automatically notify Support: Yes

User response:

- Replace the hard disk drives that are indicated by a lit status LED on the drive.
- Recreate the array.
- Restore data from backup.

806f060d-0402ffff Array [ComputerSystemElementName] has failed.

Explanation: The Drive 2 is part of an RAID array that is in the failed condition. To identify drives in the failed array all member drives will report this message.

May also be shown as 806f060d0402ffff or 0x806f060d0402ffff

Severity: Error

Alert Category: Critical - Hard Disk drive

Serviceable: Yes

CIM Information: **Prefix:** PLAT and **ID:** 0176

SNMP Trap ID: 5

Automatically notify Support: Yes

User response:

- Replace the hard disk drives that are indicated by a lit status LED on the drive.
- Recreate the array.

- Restore data from backup.

806f060d-0403ffff Array [ComputerSystemElementName] has failed.

Explanation: The Drive 3 is part of an RAID array that is in the failed condition. To identify drives in the failed array all member drives will report this message.

May also be shown as 806f060d0403ffff or 0x806f060d0403ffff

Severity: Error

Alert Category: Critical - Hard Disk drive

Serviceable: Yes

CIM Information: **Prefix:** PLAT and **ID:** 0176

SNMP Trap ID: 5

Automatically notify Support: Yes

User response:

- Check IMM log for Predictive Fault (PFA) or other hard drive messages to help identify failing drive(s).
- Replace the hard disk drives that are indicated by a lit status LED on the drive.
- Recreate the array.
- Restore data from backup.

806f060d-0404ffff Array [ComputerSystemElementName] has failed.

Explanation: The Drive 4 is part of an RAID array that is in the failed condition. To identify drives in the failed array all member drives will report this message.

May also be shown as 806f060d0404ffff or 0x806f060d0404ffff

Severity: Error

Alert Category: Critical - Hard Disk drive

Serviceable: Yes

CIM Information: **Prefix:** PLAT and **ID:** 0176

SNMP Trap ID: 5

Automatically notify Support: Yes

User response:

- Replace the hard disk drives that are indicated by a lit status LED on the drive.
- Recreate the array.
- Restore data from backup.

806f060d-0405ffff Array [ComputerSystemElementName] has failed.

Explanation: The Drive 5 is part of an RAID array that is in the failed condition. To identify drives in the failed array all member drives will report this message.

May also be shown as 806f060d0405ffff or 0x806f060d0405ffff

Severity: Error

Alert Category: Critical - Hard Disk drive

Serviceable: Yes

CIM Information: **Prefix:** PLAT and **ID:** 0176

SNMP Trap ID: 5

Automatically notify Support: Yes

User response:

- Replace the hard disk drives that are indicated by a lit status LED on the drive.
- Recreate the array.
- Restore data from backup.

806f060d-0406ffff Array [ComputerSystemElementName] has failed.

Explanation: The Drive 6 is part of an RAID array that is in the failed condition. To identify drives in the failed array all member drives will report this message.

May also be shown as 806f060d0406ffff or 0x806f060d0406ffff

Severity: Error

Alert Category: Critical - Hard Disk drive

Serviceable: Yes

CIM Information: **Prefix:** PLAT and **ID:** 0176

SNMP Trap ID: 5

Automatically notify Support: Yes

User response:

- Replace the hard disk drives that are indicated by a lit status LED on the drive.
- Recreate the array.
- Restore data from backup.

806f060d-0407ffff Array [ComputerSystemElementName] has failed.

Explanation: The Drive 7 is part of an RAID array that is in the failed condition. To identify drives in the failed array all member drives will report this message.

May also be shown as 806f060d0407ffff or 0x806f060d0407ffff

Severity: Error

Alert Category: Critical - Hard Disk drive

Serviceable: Yes

CIM Information: **Prefix:** PLAT and **ID:** 0176

SNMP Trap ID: 5

Automatically notify Support: Yes

User response:

- Replace the hard disk drives that are indicated by a lit status LED on the drive.
- Recreate the array.
- Restore data from backup.

806f070c-2001ffff Configuration Error for [PhysicalMemoryElementName] on Subsystem [MemoryElementName].

Explanation: This message is for the use case when an implementation has detected a Memory DIMM configuration error has been corrected.

May also be shown as 806f070c2001ffff or 0x806f070c2001ffff

Severity: Error

Alert Category: Critical - Memory

Serviceable: Yes

CIM Information: **Prefix:** PLAT and **ID:** 0126

SNMP Trap ID: 41

Automatically notify Support: No

User response: This is a UEFI detected event. The UEFI diagnostic code for this event can be found in the logged IMM message text. Please refer to the UEFI diagnostic code in the "UEFI diagnostic code" section of the Information Center for the appropriate user response.

806f070c-2002ffff Configuration Error for [PhysicalMemoryElementName] on Subsystem [MemoryElementName].

Explanation: This message is for the use case when an implementation has detected a Memory DIMM configuration error has been corrected.

May also be shown as 806f070c2002ffff or 0x806f070c2002ffff

Severity: Error

Alert Category: Critical - Memory

Serviceable: Yes

CIM Information: **Prefix:** PLAT and **ID:** 0126

SNMP Trap ID: 41

Automatically notify Support: No

User response: This is a UEFI detected event. The UEFI diagnostic code for this event can be found in the logged IMM message text. Please refer to the UEFI diagnostic code in the "UEFI diagnostic code" section of the Information Center for the appropriate user response.

806f070c-2003ffff Configuration Error for [PhysicalMemoryElementName] on Subsystem [MemoryElementName].

Explanation: This message is for the use case when an implementation has detected a Memory DIMM configuration error has been corrected.

May also be shown as 806f070c2003ffff or 0x806f070c2003ffff

Severity: Error

Alert Category: Critical - Memory

Serviceable: Yes

CIM Information: **Prefix:** PLAT and **ID:** 0126

SNMP Trap ID: 41

Automatically notify Support: No

User response: This is a UEFI detected event. The UEFI diagnostic code for this event can be found in the logged IMM message text. Please refer to the UEFI diagnostic code in the "UEFI diagnostic code" section of the Information Center for the appropriate user response.

806f070c-2004ffff Configuration Error for [PhysicalMemoryElementName] on Subsystem [MemoryElementName].

Explanation: This message is for the use case when an implementation has detected a Memory DIMM configuration error has been corrected.

May also be shown as 806f070c2004ffff or 0x806f070c2004ffff

Severity: Error

Alert Category: Critical - Memory

Serviceable: Yes

CIM Information: **Prefix:** PLAT and **ID:** 0126

SNMP Trap ID: 41

Automatically notify Support: No

User response: This is a UEFI detected event. The UEFI diagnostic code for this event can be found in the logged IMM message text. Please refer to the UEFI diagnostic code in the "UEFI diagnostic code" section of the Information Center for the appropriate user response.

806f070c-2005ffff Configuration Error for [PhysicalMemoryElementName] on Subsystem [MemoryElementName].

Explanation: This message is for the use case when an implementation has detected a Memory DIMM configuration error has been corrected.

May also be shown as 806f070c2005ffff or 0x806f070c2005ffff

Severity: Error

Alert Category: Critical - Memory

Serviceable: Yes

CIM Information: **Prefix:** PLAT and **ID:** 0126

SNMP Trap ID: 41

Automatically notify Support: No

User response: This is a UEFI detected event. The UEFI diagnostic code for this event can be found in the logged IMM message text. Please refer to the UEFI diagnostic code in the "UEFI diagnostic code" section of the Information Center for the appropriate user response.

806f070c-2006ffff Configuration Error for [PhysicalMemoryElementName] on Subsystem [MemoryElementName].

Explanation: This message is for the use case when an implementation has detected a Memory DIMM configuration error has been corrected.

May also be shown as 806f070c2006ffff or 0x806f070c2006ffff

Severity: Error

Alert Category: Critical - Memory

Serviceable: Yes

CIM Information: **Prefix:** PLAT and **ID:** 0126

SNMP Trap ID: 41

Automatically notify Support: No

User response: This is a UEFI detected event. The UEFI diagnostic code for this event can be found in the logged IMM message text. Please refer to the UEFI diagnostic code in the "UEFI diagnostic code" section of the Information Center for the appropriate user response.

806f070c-2007ffff Configuration Error for [PhysicalMemoryElementName] on Subsystem [MemoryElementName].

Explanation: This message is for the use case when an implementation has detected a Memory DIMM configuration error has been corrected.

May also be shown as 806f070c2007ffff or 0x806f070c2007ffff

Severity: Error

Alert Category: Critical - Memory

Serviceable: Yes

CIM Information: **Prefix:** PLAT and **ID:** 0126

SNMP Trap ID: 41

Automatically notify Support: No

User response: This is a UEFI detected event. The UEFI diagnostic code for this event can be found in the logged IMM message text. Please refer to the UEFI diagnostic code in the "UEFI diagnostic code" section of the Information Center for the appropriate user response.

806f070c-2008ffff Configuration Error for [PhysicalMemoryElementName] on Subsystem [MemoryElementName].

Explanation: This message is for the use case when an implementation has detected a Memory DIMM configuration error has been corrected.

May also be shown as 806f070c2008ffff or 0x806f070c2008ffff

Severity: Error

Alert Category: Critical - Memory

Serviceable: Yes

CIM Information: **Prefix:** PLAT and **ID:** 0126

SNMP Trap ID: 41

Automatically notify Support: No

User response: This is a UEFI detected event. The UEFI diagnostic code for this event can be found in the logged IMM message text. Please refer to the UEFI diagnostic code in the "UEFI diagnostic code" section of the Information Center for the appropriate user response.

806f070c-2009ffff Configuration Error for [PhysicalMemoryElementName] on Subsystem [MemoryElementName].

Explanation: This message is for the use case when an implementation has detected a Memory DIMM configuration error has been corrected.

May also be shown as 806f070c2009ffff or 0x806f070c2009ffff

Severity: Error

Alert Category: Critical - Memory

Serviceable: Yes

CIM Information: **Prefix:** PLAT and **ID:** 0126

SNMP Trap ID: 41

Automatically notify Support: No

User response: This is a UEFI detected event. The UEFI diagnostic code for this event can be found in the logged IMM message text. Please refer to the UEFI diagnostic code in the "UEFI diagnostic code" section of the Information Center for the appropriate user response.

806f070c-200affff Configuration Error for [PhysicalMemoryElementName] on Subsystem [MemoryElementName].

Explanation: This message is for the use case when an implementation has detected a Memory DIMM configuration error has been corrected.

May also be shown as 806f070c200affff or 0x806f070c200affff

Severity: Error

Alert Category: Critical - Memory

Serviceable: Yes

CIM Information: **Prefix:** PLAT and **ID:** 0126

SNMP Trap ID: 41

Automatically notify Support: No

User response: This is a UEFI detected event. The UEFI diagnostic code for this event can be found in the logged IMM message text. Please refer to the UEFI diagnostic code in the "UEFI diagnostic code" section of the Information Center for the appropriate user response.

806f070c-200bffff Configuration Error for [PhysicalMemoryElementName] on Subsystem [MemoryElementName].

Explanation: This message is for the use case when an implementation has detected a Memory DIMM configuration error has been corrected.

May also be shown as 806f070c200bffff or 0x806f070c200bffff

Severity: Error

Alert Category: Critical - Memory

Serviceable: Yes

CIM Information: **Prefix:** PLAT and **ID:** 0126

SNMP Trap ID: 41

Automatically notify Support: No

User response: This is a UEFI detected event. The UEFI diagnostic code for this event can be found in the logged IMM message text. Please refer to the UEFI diagnostic code in the "UEFI diagnostic code" section of the Information Center for the appropriate user response.

806f070c-200cffff Configuration Error for [PhysicalMemoryElementName] on Subsystem [MemoryElementName].

Explanation: This message is for the use case when an implementation has detected a Memory DIMM configuration error has been corrected.

May also be shown as 806f070c200cffff or 0x806f070c200cffff

Severity: Error

Alert Category: Critical - Memory

Serviceable: Yes

CIM Information: **Prefix:** PLAT and **ID:** 0126

SNMP Trap ID: 41

Automatically notify Support: No

User response: This is a UEFI detected event. The UEFI diagnostic code for this event can be found in the logged IMM message text. Please refer to the UEFI diagnostic code in the "UEFI diagnostic code" section of the Information Center for the appropriate user response.

806f070c-200dffff Configuration Error for [PhysicalMemoryElementName] on Subsystem [MemoryElementName].

Explanation: This message is for the use case when an implementation has detected a Memory DIMM configuration error has been corrected.

May also be shown as 806f070c200dffff or 0x806f070c200dffff

Severity: Error

Alert Category: Critical - Memory

Serviceable: Yes

CIM Information: **Prefix:** PLAT and **ID:** 0126

SNMP Trap ID: 41

Automatically notify Support: No

User response: This is a UEFI detected event. The UEFI diagnostic code for this event can be found in the logged IMM message text. Please refer to the UEFI diagnostic code in the "UEFI diagnostic code" section of the Information Center for the appropriate user response.

806f070c-200effff Configuration Error for [PhysicalMemoryElementName] on Subsystem [MemoryElementName].

Explanation: This message is for the use case when an implementation has detected a Memory DIMM configuration error has been corrected.

May also be shown as 806f070c200effff or 0x806f070c200effff

Severity: Error

Alert Category: Critical - Memory

Serviceable: Yes

CIM Information: **Prefix:** PLAT and **ID:** 0126

SNMP Trap ID: 41

Automatically notify Support: No

User response: This is a UEFI detected event. The UEFI diagnostic code for this event can be found in the logged IMM message text. Please refer to the UEFI diagnostic code in the "UEFI diagnostic code" section of the Information Center for the appropriate user response.

806f070c-200fffff Configuration Error for [PhysicalMemoryElementName] on Subsystem [MemoryElementName].

Explanation: This message is for the use case when an implementation has detected a Memory DIMM configuration error has been corrected.

May also be shown as 806f070c200fffff or 0x806f070c200fffff

Severity: Error

Alert Category: Critical - Memory

Serviceable: Yes

CIM Information: **Prefix:** PLAT and **ID:** 0126

SNMP Trap ID: 41

Automatically notify Support: No

User response: This is a UEFI detected event. The UEFI diagnostic code for this event can be found in the logged IMM message text. Please refer to the UEFI diagnostic code in the "UEFI diagnostic code" section of the Information Center for the appropriate user response.

806f070c-2010ffff Configuration Error for [PhysicalMemoryElementName] on Subsystem [MemoryElementName].

Explanation: This message is for the use case when an implementation has detected a Memory DIMM configuration error has been corrected.

May also be shown as 806f070c2010ffff or 0x806f070c2010ffff

Severity: Error

Alert Category: Critical - Memory

Serviceable: Yes

CIM Information: **Prefix:** PLAT and **ID:** 0126

SNMP Trap ID: 41

Automatically notify Support: No

User response: This is a UEFI detected event. The UEFI diagnostic code for this event can be found in the logged IMM message text. Please refer to the UEFI diagnostic code in the "UEFI diagnostic code" section of the Information Center for the appropriate user response.

806f070c-2011ffff Configuration Error for [PhysicalMemoryElementName] on Subsystem [MemoryElementName].

Explanation: This message is for the use case when an implementation has detected a Memory DIMM configuration error has been corrected.

May also be shown as 806f070c2011ffff or 0x806f070c2011ffff

Severity: Error

Alert Category: Critical - Memory

Serviceable: Yes

CIM Information: **Prefix:** PLAT and **ID:** 0126

SNMP Trap ID: 41

Automatically notify Support: No

User response: This is a UEFI detected event. The UEFI diagnostic code for this event can be found in the logged IMM message text. Please refer to the UEFI diagnostic code in the "UEFI diagnostic code" section of the Information Center for the appropriate user response.

806f070c-2012ffff Configuration Error for [PhysicalMemoryElementName] on Subsystem [MemoryElementName].

Explanation: This message is for the use case when an implementation has detected a Memory DIMM configuration error has been corrected.

May also be shown as 806f070c2012ffff or 0x806f070c2012ffff

Severity: Error

Alert Category: Critical - Memory

Serviceable: Yes

CIM Information: **Prefix:** PLAT and **ID:** 0126

SNMP Trap ID: 41

Automatically notify Support: No

User response: This is a UEFI detected event. The UEFI diagnostic code for this event can be found in the logged IMM message text. Please refer to the UEFI diagnostic code in the "UEFI diagnostic code" section of the Information Center for the appropriate user response.

806f070c-2013ffff Configuration Error for [PhysicalMemoryElementName] on Subsystem [MemoryElementName].

Explanation: This message is for the use case when an implementation has detected a Memory DIMM configuration error has been corrected.

May also be shown as 806f070c2013ffff or 0x806f070c2013ffff

Severity: Error

Alert Category: Critical - Memory

Serviceable: Yes

CIM Information: **Prefix:** PLAT and **ID:** 0126

SNMP Trap ID: 41

Automatically notify Support: No

User response: This is a UEFI detected event. The UEFI diagnostic code for this event can be found in the logged

IMM message text. Please refer to the UEFI diagnostic code in the "UEFI diagnostic code" section of the Information Center for the appropriate user response.

806f070c-2014ffff Configuration Error for [PhysicalMemoryElementName] on Subsystem [MemoryElementName].

Explanation: This message is for the use case when an implementation has detected a Memory DIMM configuration error has been corrected.

May also be shown as 806f070c2014ffff or 0x806f070c2014ffff

Severity: Error

Alert Category: Critical - Memory

Serviceable: Yes

CIM Information: **Prefix:** PLAT and **ID:** 0126

SNMP Trap ID: 41

Automatically notify Support: No

User response: This is a UEFI detected event. The UEFI diagnostic code for this event can be found in the logged IMM message text. Please refer to the UEFI diagnostic code in the "UEFI diagnostic code" section of the Information Center for the appropriate user response.

806f070c-2015ffff Configuration Error for [PhysicalMemoryElementName] on Subsystem [MemoryElementName].

Explanation: This message is for the use case when an implementation has detected a Memory DIMM configuration error has been corrected.

May also be shown as 806f070c2015ffff or 0x806f070c2015ffff

Severity: Error

Alert Category: Critical - Memory

Serviceable: Yes

CIM Information: **Prefix:** PLAT and **ID:** 0126

SNMP Trap ID: 41

Automatically notify Support: No

User response: This is a UEFI detected event. The UEFI diagnostic code for this event can be found in the logged IMM message text. Please refer to the UEFI diagnostic code in the "UEFI diagnostic code" section of the Information Center for the appropriate user response.

806f070c-2016ffff Configuration Error for [PhysicalMemoryElementName] on Subsystem [MemoryElementName].

Explanation: This message is for the use case when an implementation has detected a Memory DIMM configuration error has been corrected.

May also be shown as 806f070c2016ffff or 0x806f070c2016ffff

Severity: Error

Alert Category: Critical - Memory

Serviceable: Yes

CIM Information: **Prefix:** PLAT and **ID:** 0126

SNMP Trap ID: 41

Automatically notify Support: No

User response: This is a UEFI detected event. The UEFI diagnostic code for this event can be found in the logged

IMM message text. Please refer to the UEFI diagnostic code in the "UEFI diagnostic code" section of the Information Center for the appropriate user response.

806f070c-2017ffff Configuration Error for [PhysicalMemoryElementName] on Subsystem [MemoryElementName].

Explanation: This message is for the use case when an implementation has detected a Memory DIMM configuration error has been corrected.

May also be shown as 806f070c2017ffff or 0x806f070c2017ffff

Severity: Error

Alert Category: Critical - Memory

Serviceable: Yes

CIM Information: **Prefix:** PLAT and **ID:** 0126

SNMP Trap ID: 41

Automatically notify Support: No

User response: This is a UEFI detected event. The UEFI diagnostic code for this event can be found in the logged IMM message text. Please refer to the UEFI diagnostic code in the "UEFI diagnostic code" section of the Information Center for the appropriate user response.

806f070c-2018ffff Configuration Error for [PhysicalMemoryElementName] on Subsystem [MemoryElementName].

Explanation: This message is for the use case when an implementation has detected a Memory DIMM configuration error has been corrected.

May also be shown as 806f070c2018ffff or 0x806f070c2018ffff

Severity: Error

Alert Category: Critical - Memory

Serviceable: Yes

CIM Information: **Prefix:** PLAT and **ID:** 0126

SNMP Trap ID: 41

Automatically notify Support: No

User response: This is a UEFI detected event. The UEFI diagnostic code for this event can be found in the logged IMM message text. Please refer to the UEFI diagnostic code in the "UEFI diagnostic code" section of the Information Center for the appropriate user response.

806f070c-2019ffff Configuration Error for [PhysicalMemoryElementName] on Subsystem [MemoryElementName].

Explanation: This message is for the use case when an implementation has detected a Memory DIMM configuration error has been corrected.

May also be shown as 806f070c2019ffff or 0x806f070c2019ffff

Severity: Error

Alert Category: Critical - Memory

Serviceable: Yes

CIM Information: **Prefix:** PLAT and **ID:** 0126

SNMP Trap ID: 41

Automatically notify Support: No

User response: This is a UEFI detected event. The UEFI diagnostic code for this event can be found in the logged

IMM message text. Please refer to the UEFI diagnostic code in the "UEFI diagnostic code" section of the Information Center for the appropriate user response.

806f070c-201affff Configuration Error for [PhysicalMemoryElementName] on Subsystem [MemoryElementName].

Explanation: This message is for the use case when an implementation has detected a Memory DIMM configuration error has been corrected.

May also be shown as 806f070c201affff or 0x806f070c201affff

Severity: Error

Alert Category: Critical - Memory

Serviceable: Yes

CIM Information: **Prefix:** PLAT and **ID:** 0126

SNMP Trap ID: 41

Automatically notify Support: No

User response: This is a UEFI detected event. The UEFI diagnostic code for this event can be found in the logged IMM message text. Please refer to the UEFI diagnostic code in the "UEFI diagnostic code" section of the Information Center for the appropriate user response.

806f070c-201bffff Configuration Error for [PhysicalMemoryElementName] on Subsystem [MemoryElementName].

Explanation: This message is for the use case when an implementation has detected a Memory DIMM configuration error has been corrected.

May also be shown as 806f070c201bffff or 0x806f070c201bffff

Severity: Error

Alert Category: Critical - Memory

Serviceable: Yes

CIM Information: **Prefix:** PLAT and **ID:** 0126

SNMP Trap ID: 41

Automatically notify Support: No

User response: This is a UEFI detected event. The UEFI diagnostic code for this event can be found in the logged IMM message text. Please refer to the UEFI diagnostic code in the "UEFI diagnostic code" section of the Information Center for the appropriate user response.

806f070c-201cffff Configuration Error for [PhysicalMemoryElementName] on Subsystem [MemoryElementName].

Explanation: This message is for the use case when an implementation has detected a Memory DIMM configuration error has been corrected.

May also be shown as 806f070c201cffff or 0x806f070c201cffff

Severity: Error

Alert Category: Critical - Memory

Serviceable: Yes

CIM Information: **Prefix:** PLAT and **ID:** 0126

SNMP Trap ID: 41

Automatically notify Support: No

User response: This is a UEFI detected event. The UEFI diagnostic code for this event can be found in the logged

IMM message text. Please refer to the UEFI diagnostic code in the "UEFI diagnostic code" section of the Information Center for the appropriate user response.

806f070c-201dffff Configuration Error for [PhysicalMemoryElementName] on Subsystem [MemoryElementName].

Explanation: This message is for the use case when an implementation has detected a Memory DIMM configuration error has been corrected.

May also be shown as 806f070c201dffff or 0x806f070c201dffff

Severity: Error

Alert Category: Critical - Memory

Serviceable: Yes

CIM Information: **Prefix:** PLAT and **ID:** 0126

SNMP Trap ID: 41

Automatically notify Support: No

User response: This is a UEFI detected event. The UEFI diagnostic code for this event can be found in the logged IMM message text. Please refer to the UEFI diagnostic code in the "UEFI diagnostic code" section of the Information Center for the appropriate user response.

806f070c-201effff Configuration Error for [PhysicalMemoryElementName] on Subsystem [MemoryElementName].

Explanation: This message is for the use case when an implementation has detected a Memory DIMM configuration error has been corrected.

May also be shown as 806f070c201effff or 0x806f070c201effff

Severity: Error

Alert Category: Critical - Memory

Serviceable: Yes

CIM Information: **Prefix:** PLAT and **ID:** 0126

SNMP Trap ID: 41

Automatically notify Support: No

User response: This is a UEFI detected event. The UEFI diagnostic code for this event can be found in the logged IMM message text. Please refer to the UEFI diagnostic code in the "UEFI diagnostic code" section of the Information Center for the appropriate user response.

806f070c-201fffff Configuration Error for [PhysicalMemoryElementName] on Subsystem [MemoryElementName].

Explanation: This message is for the use case when an implementation has detected a Memory DIMM configuration error has been corrected.

May also be shown as 806f070c201fffff or 0x806f070c201fffff

Severity: Error

Alert Category: Critical - Memory

Serviceable: Yes

CIM Information: **Prefix:** PLAT and **ID:** 0126

SNMP Trap ID: 41

Automatically notify Support: No

User response: This is a UEFI detected event. The UEFI diagnostic code for this event can be found in the logged

IMM message text. Please refer to the UEFI diagnostic code in the "UEFI diagnostic code" section of the Information Center for the appropriate user response.

806f070c-2020ffff Configuration Error for [PhysicalMemoryElementName] on Subsystem [MemoryElementName].

Explanation: This message is for the use case when an implementation has detected a Memory DIMM configuration error has been corrected.

May also be shown as 806f070c2020ffff or 0x806f070c2020ffff

Severity: Error

Alert Category: Critical - Memory

Serviceable: Yes

CIM Information: **Prefix:** PLAT and **ID:** 0126

SNMP Trap ID: 41

Automatically notify Support: No

User response: This is a UEFI detected event. The UEFI diagnostic code for this event can be found in the logged IMM message text. Please refer to the UEFI diagnostic code in the "UEFI diagnostic code" section of the Information Center for the appropriate user response.

806f070c-2021ffff Configuration Error for [PhysicalMemoryElementName] on Subsystem [MemoryElementName].

Explanation: This message is for the use case when an implementation has detected a Memory DIMM configuration error has been corrected.

May also be shown as 806f070c2021ffff or 0x806f070c2021ffff

Severity: Error

Alert Category: Critical - Memory

Serviceable: Yes

CIM Information: **Prefix:** PLAT and **ID:** 0126

SNMP Trap ID: 41

Automatically notify Support: No

User response: This is a UEFI detected event. The UEFI diagnostic code for this event can be found in the logged IMM message text. Please refer to the UEFI diagnostic code in the "UEFI diagnostic code" section of the Information Center for the appropriate user response.

806f070c-2022ffff Configuration Error for [PhysicalMemoryElementName] on Subsystem [MemoryElementName].

Explanation: This message is for the use case when an implementation has detected a Memory DIMM configuration error has been corrected.

May also be shown as 806f070c2022ffff or 0x806f070c2022ffff

Severity: Error

Alert Category: Critical - Memory

Serviceable: Yes

CIM Information: **Prefix:** PLAT and **ID:** 0126

SNMP Trap ID: 41

Automatically notify Support: No

User response: This is a UEFI detected event. The UEFI diagnostic code for this event can be found in the logged

IMM message text. Please refer to the UEFI diagnostic code in the "UEFI diagnostic code" section of the Information Center for the appropriate user response.

806f070c-2023ffff Configuration Error for [PhysicalMemoryElementName] on Subsystem [MemoryElementName].

Explanation: This message is for the use case when an implementation has detected a Memory DIMM configuration error has been corrected.

May also be shown as 806f070c2023ffff or 0x806f070c2023ffff

Severity: Error

Alert Category: Critical - Memory

Serviceable: Yes

CIM Information: **Prefix:** PLAT and **ID:** 0126

SNMP Trap ID: 41

Automatically notify Support: No

User response: This is a UEFI detected event. The UEFI diagnostic code for this event can be found in the logged IMM message text. Please refer to the UEFI diagnostic code in the "UEFI diagnostic code" section of the Information Center for the appropriate user response.

806f070c-2024ffff Configuration Error for [PhysicalMemoryElementName] on Subsystem [MemoryElementName].

Explanation: This message is for the use case when an implementation has detected a Memory DIMM configuration error has been corrected.

May also be shown as 806f070c2024ffff or 0x806f070c2024ffff

Severity: Error

Alert Category: Critical - Memory

Serviceable: Yes

CIM Information: **Prefix:** PLAT and **ID:** 0126

SNMP Trap ID: 41

Automatically notify Support: No

User response: This is a UEFI detected event. The UEFI diagnostic code for this event can be found in the logged IMM message text. Please refer to the UEFI diagnostic code in the "UEFI diagnostic code" section of the Information Center for the appropriate user response.

806f070c-2025ffff Configuration Error for [PhysicalMemoryElementName] on Subsystem [MemoryElementName].

Explanation: This message is for the use case when an implementation has detected a Memory DIMM configuration error has been corrected.

May also be shown as 806f070c2025ffff or 0x806f070c2025ffff

Severity: Error

Alert Category: Critical - Memory

Serviceable: Yes

CIM Information: **Prefix:** PLAT and **ID:** 0126

SNMP Trap ID: 41

Automatically notify Support: No

User response: This is a UEFI detected event. The UEFI diagnostic code for this event can be found in the logged

IMM message text. Please refer to the UEFI diagnostic code in the "UEFI diagnostic code" section of the Information Center for the appropriate user response.

806f070c-2026ffff Configuration Error for [PhysicalMemoryElementName] on Subsystem [MemoryElementName].

Explanation: This message is for the use case when an implementation has detected a Memory DIMM configuration error has been corrected.

May also be shown as 806f070c2026ffff or 0x806f070c2026ffff

Severity: Error

Alert Category: Critical - Memory

Serviceable: Yes

CIM Information: **Prefix:** PLAT and **ID:** 0126

SNMP Trap ID: 41

Automatically notify Support: No

User response: This is a UEFI detected event. The UEFI diagnostic code for this event can be found in the logged IMM message text. Please refer to the UEFI diagnostic code in the "UEFI diagnostic code" section of the Information Center for the appropriate user response.

806f070c-2027ffff Configuration Error for [PhysicalMemoryElementName] on Subsystem [MemoryElementName].

Explanation: This message is for the use case when an implementation has detected a Memory DIMM configuration error has been corrected.

May also be shown as 806f070c2027ffff or 0x806f070c2027ffff

Severity: Error

Alert Category: Critical - Memory

Serviceable: Yes

CIM Information: **Prefix:** PLAT and **ID:** 0126

SNMP Trap ID: 41

Automatically notify Support: No

User response: This is a UEFI detected event. The UEFI diagnostic code for this event can be found in the logged IMM message text. Please refer to the UEFI diagnostic code in the "UEFI diagnostic code" section of the Information Center for the appropriate user response.

806f070c-2028ffff Configuration Error for [PhysicalMemoryElementName] on Subsystem [MemoryElementName].

Explanation: This message is for the use case when an implementation has detected a Memory DIMM configuration error has been corrected.

May also be shown as 806f070c2028ffff or 0x806f070c2028ffff

Severity: Error

Alert Category: Critical - Memory

Serviceable: Yes

CIM Information: **Prefix:** PLAT and **ID:** 0126

SNMP Trap ID: 41

Automatically notify Support: No

User response: This is a UEFI detected event. The UEFI diagnostic code for this event can be found in the logged

IMM message text. Please refer to the UEFI diagnostic code in the "UEFI diagnostic code" section of the Information Center for the appropriate user response.

806f070c-2029ffff Configuration Error for [PhysicalMemoryElementName] on Subsystem [MemoryElementName].

Explanation: This message is for the use case when an implementation has detected a Memory DIMM configuration error has been corrected.

May also be shown as 806f070c2029ffff or 0x806f070c2029ffff

Severity: Error

Alert Category: Critical - Memory

Serviceable: Yes

CIM Information: **Prefix:** PLAT and **ID:** 0126

SNMP Trap ID: 41

Automatically notify Support: No

User response: This is a UEFI detected event. The UEFI diagnostic code for this event can be found in the logged IMM message text. Please refer to the UEFI diagnostic code in the "UEFI diagnostic code" section of the Information Center for the appropriate user response.

806f070c-202affff Configuration Error for [PhysicalMemoryElementName] on Subsystem [MemoryElementName].

Explanation: This message is for the use case when an implementation has detected a Memory DIMM configuration error has been corrected.

May also be shown as 806f070c202affff or 0x806f070c202affff

Severity: Error

Alert Category: Critical - Memory

Serviceable: Yes

CIM Information: **Prefix:** PLAT and **ID:** 0126

SNMP Trap ID: 41

Automatically notify Support: No

User response: This is a UEFI detected event. The UEFI diagnostic code for this event can be found in the logged IMM message text. Please refer to the UEFI diagnostic code in the "UEFI diagnostic code" section of the Information Center for the appropriate user response.

806f070c-202bffff Configuration Error for [PhysicalMemoryElementName] on Subsystem [MemoryElementName].

Explanation: This message is for the use case when an implementation has detected a Memory DIMM configuration error has been corrected.

May also be shown as 806f070c202bffff or 0x806f070c202bffff

Severity: Error

Alert Category: Critical - Memory

Serviceable: Yes

CIM Information: **Prefix:** PLAT and **ID:** 0126

SNMP Trap ID: 41

Automatically notify Support: No

User response: This is a UEFI detected event. The UEFI diagnostic code for this event can be found in the logged

IMM message text. Please refer to the UEFI diagnostic code in the "UEFI diagnostic code" section of the Information Center for the appropriate user response.

806f070c-202cffff Configuration Error for [PhysicalMemoryElementName] on Subsystem [MemoryElementName].

Explanation: This message is for the use case when an implementation has detected a Memory DIMM configuration error has been corrected.

May also be shown as 806f070c202cffff or 0x806f070c202cffff

Severity: Error

Alert Category: Critical - Memory

Serviceable: Yes

CIM Information: **Prefix:** PLAT and **ID:** 0126

SNMP Trap ID: 41

Automatically notify Support: No

User response: This is a UEFI detected event. The UEFI diagnostic code for this event can be found in the logged IMM message text. Please refer to the UEFI diagnostic code in the "UEFI diagnostic code" section of the Information Center for the appropriate user response.

806f070c-202dffff Configuration Error for [PhysicalMemoryElementName] on Subsystem [MemoryElementName].

Explanation: This message is for the use case when an implementation has detected a Memory DIMM configuration error has been corrected.

May also be shown as 806f070c202dffff or 0x806f070c202dffff

Severity: Error

Alert Category: Critical - Memory

Serviceable: Yes

CIM Information: **Prefix:** PLAT and **ID:** 0126

SNMP Trap ID: 41

Automatically notify Support: No

User response: This is a UEFI detected event. The UEFI diagnostic code for this event can be found in the logged IMM message text. Please refer to the UEFI diagnostic code in the "UEFI diagnostic code" section of the Information Center for the appropriate user response.

806f070c-202effff Configuration Error for [PhysicalMemoryElementName] on Subsystem [MemoryElementName].

Explanation: This message is for the use case when an implementation has detected a Memory DIMM configuration error has been corrected.

May also be shown as 806f070c202effff or 0x806f070c202effff

Severity: Error

Alert Category: Critical - Memory

Serviceable: Yes

CIM Information: **Prefix:** PLAT and **ID:** 0126

SNMP Trap ID: 41

Automatically notify Support: No

User response: This is a UEFI detected event. The UEFI diagnostic code for this event can be found in the logged

IMM message text. Please refer to the UEFI diagnostic code in the "UEFI diagnostic code" section of the Information Center for the appropriate user response.

806f070c-202fffff Configuration Error for [PhysicalMemoryElementName] on Subsystem [MemoryElementName].

Explanation: This message is for the use case when an implementation has detected a Memory DIMM configuration error has been corrected.

May also be shown as 806f070c202fffff or 0x806f070c202fffff

Severity: Error

Alert Category: Critical - Memory

Serviceable: Yes

CIM Information: **Prefix:** PLAT and **ID:** 0126

SNMP Trap ID: 41

Automatically notify Support: No

User response: This is a UEFI detected event. The UEFI diagnostic code for this event can be found in the logged IMM message text. Please refer to the UEFI diagnostic code in the "UEFI diagnostic code" section of the Information Center for the appropriate user response.

806f070c-2030ffff Configuration Error for [PhysicalMemoryElementName] on Subsystem [MemoryElementName].

Explanation: This message is for the use case when an implementation has detected a Memory DIMM configuration error has been corrected.

May also be shown as 806f070c2030ffff or 0x806f070c2030ffff

Severity: Error

Alert Category: Critical - Memory

Serviceable: Yes

CIM Information: **Prefix:** PLAT and **ID:** 0126

SNMP Trap ID: 41

Automatically notify Support: No

User response: This is a UEFI detected event. The UEFI diagnostic code for this event can be found in the logged IMM message text. Please refer to the UEFI diagnostic code in the "UEFI diagnostic code" section of the Information Center for the appropriate user response.

806f070c-2581ffff Configuration Error for [PhysicalMemoryElementName] on Subsystem [MemoryElementName].

Explanation: This message is for the use case when an implementation has detected a Memory DIMM configuration error has been corrected. All DIMMs. One of the DIMMs.

May also be shown as 806f070c2581ffff or 0x806f070c2581ffff

Severity: Error

Alert Category: Critical - Memory

Serviceable: Yes

CIM Information: **Prefix:** PLAT and **ID:** 0126

SNMP Trap ID: 41

Automatically notify Support: No

User response: This is a UEFI detected event. The UEFI diagnostic code for this event can be found in the logged

IMM message text. Please refer to the UEFI diagnostic code in the "UEFI diagnostic code" section of the Information Center for the appropriate user response.

806f070d-0400ffff Rebuild in progress for Array in system [ComputerSystemElementName].

Explanation: The array that contains Drive 0 is in the process of being rebuilt.

May also be shown as 806f070d0400ffff or 0x806f070d0400ffff

Severity: Info

Alert Category: System - Other

Serviceable: No

CIM Information: **Prefix:** PLAT and **ID:** 0178

SNMP Trap ID:

Automatically notify Support: No

User response: Information only; no action is required.

806f070d-0401ffff Rebuild in progress for Array in system [ComputerSystemElementName].

Explanation: The array that contains Drive 1 is in the process of being rebuilt.

May also be shown as 806f070d0401ffff or 0x806f070d0401ffff

Severity: Info

Alert Category: System - Other

Serviceable: No

CIM Information: **Prefix:** PLAT and **ID:** 0178

SNMP Trap ID:

Automatically notify Support: No

User response: Information only; no action is required.

806f070d-0402ffff Rebuild in progress for Array in system [ComputerSystemElementName].

Explanation: The array that contains Drive 2 is in the process of being rebuilt.

May also be shown as 806f070d0402ffff or 0x806f070d0402ffff

Severity: Info

Alert Category: System - Other

Serviceable: No

CIM Information: **Prefix:** PLAT and **ID:** 0178

SNMP Trap ID:

Automatically notify Support: No

User response: Information only; no action is required.

806f070d-0403ffff Rebuild in progress for Array in system [ComputerSystemElementName].

Explanation: The array that contains Drive 3 is in the process of being rebuilt.

May also be shown as 806f070d0403ffff or 0x806f070d0403ffff

Severity: Info

Alert Category: System - Other

Serviceable: No

CIM Information: **Prefix:** PLAT and **ID:** 0178

SNMP Trap ID:

Automatically notify Support: No

User response: Information only; no action is required.

806f070d-0404ffff Rebuild in progress for Array in system [ComputerSystemElementName].

Explanation: The array that contains Drive 4 is in the process of being rebuilt.

May also be shown as 806f070d0404ffff or 0x806f070d0404ffff

Severity: Info

Alert Category: System - Other

Serviceable: No

CIM Information: **Prefix:** PLAT and **ID:** 0178

SNMP Trap ID:

Automatically notify Support: No

User response: Information only; no action is required.

806f070d-0405ffff Rebuild in progress for Array in system [ComputerSystemElementName].

Explanation: The array that contains Drive 5 is in the process of being rebuilt.

May also be shown as 806f070d0405ffff or 0x806f070d0405ffff

Severity: Info

Alert Category: System - Other

Serviceable: No

CIM Information: **Prefix:** PLAT and **ID:** 0178

SNMP Trap ID:

Automatically notify Support: No

User response: Information only; no action is required.

806f070d-0406ffff Rebuild in progress for Array in system [ComputerSystemElementName].

Explanation: The array that contains Drive 6 is in the process of being rebuilt.

May also be shown as 806f070d0406ffff or 0x806f070d0406ffff

Severity: Info

Alert Category: System - Other

Serviceable: No

CIM Information: **Prefix:** PLAT and **ID:** 0178

SNMP Trap ID:

Automatically notify Support: No

User response: Information only; no action is required.

806f070d-0407ffff Rebuild in progress for Array in system [ComputerSystemElementName].

Explanation: The array that contains Drive 7 is in the process of being rebuilt.

May also be shown as 806f070d0407ffff or 0x806f070d0407ffff

Severity: Info

Alert Category: System - Other

Serviceable: No

CIM Information: **Prefix:** PLAT and **ID:** 0178

SNMP Trap ID:

Automatically notify Support: No

User response: Information only; no action is required.

806f0807-0301ffff CPU 1 has been Disabled.

Explanation: This message is for the use case when an implementation has detected a Processor has been Disabled.

May also be shown as 806f08070301ffff or 0x806f08070301ffff

Severity: Info

Alert Category: System - Other

Serviceable: No

CIM Information: **Prefix:** PLAT and **ID:** 0061

SNMP Trap ID:

Automatically notify Support: No

User response: This is a UEFI detected event. The UEFI diagnostic code for this event can be found in the logged IMM message text. Please refer to the UEFI diagnostic code in the "UEFI diagnostic code" section of the Information Center for the appropriate user response.

806f0807-0302ffff CPU 2 has been Disabled.

Explanation: This message is for the use case when an implementation has detected a Processor has been Disabled.

May also be shown as 806f08070302ffff or 0x806f08070302ffff

Severity: Info

Alert Category: System - Other

Serviceable: No

CIM Information: **Prefix:** PLAT and **ID:** 0061

SNMP Trap ID:

Automatically notify Support: No

User response: This is a UEFI detected event. The UEFI diagnostic code for this event can be found in the logged IMM message text. Please refer to the UEFI diagnostic code in the "UEFI diagnostic code" section of the Information Center for the appropriate user response.

806f0807-0303ffff CPU 3 has been Disabled.

Explanation: This message is for the use case when an implementation has detected a Processor has been Disabled.

May also be shown as 806f08070303ffff or 0x806f08070303ffff

Severity: Info

Alert Category: System - Other

Serviceable: No

CIM Information: **Prefix:** PLAT and **ID:** 0061

SNMP Trap ID:

Automatically notify Support: No

User response: This is a UEFI detected event. The UEFI diagnostic code for this event can be found in the logged IMM message text. Please refer to the UEFI diagnostic code in the "UEFI diagnostic code" section of the Information Center for the appropriate user response.

806f0807-0304ffff CPU 4 has been Disabled.

Explanation: This message is for the use case when an implementation has detected a Processor has been Disabled.

May also be shown as 806f08070304ffff or 0x806f08070304ffff

Severity: Info

Alert Category: System - Other

Serviceable: No

CIM Information: **Prefix:** PLAT and **ID:** 0061

SNMP Trap ID:

Automatically notify Support: No

User response: This is a UEFI detected event. The UEFI diagnostic code for this event can be found in the logged IMM message text. Please refer to the UEFI diagnostic code in the "UEFI diagnostic code" section of the Information Center for the appropriate user response.

806f0807-2584ffff [ProcessorElementName] has been Disabled.

Explanation: This message is for the use case when an implementation has detected a Processor has been Disabled. All CPUs. One of CPUs.

May also be shown as 806f08072584ffff or 0x806f08072584ffff

Severity: Info

Alert Category: System - Other

Serviceable: No

CIM Information: **Prefix:** PLAT and **ID:** 0061

SNMP Trap ID:

Automatically notify Support: No

User response: This is a UEFI detected event. The UEFI diagnostic code for this event can be found in the logged IMM message text. Please refer to the UEFI diagnostic code in the "UEFI diagnostic code" section of the Information Center for the appropriate user response.

806f0813-2581ffff A Uncorrectable Bus Error has occurred on system [ComputerSystemElementName].

Explanation: A catastrophic system error has occurred. The system firmware will attempt to analyze the failure to determine whether the failure was due to a hardware component or a software component.

May also be shown as 806f08132581ffff or 0x806f08132581ffff

Severity: Error

Alert Category: Critical - Other

Serviceable: Yes

CIM Information: **Prefix:** PLAT and **ID:** 0240

SNMP Trap ID: 50

Automatically notify Support: Yes

User response:

1. Check http://www.ibm.com/supportportal/ for RETAIN tips or firmware updates that might correct the error.
2. Make sure that all I/O expansion adapters have correct and matching levels of device drivers and firmware.
3. Check the system-event log for additional information about failing components.
4. If there are no entries related to the error in the system-event log, contact IBM Support and send DSA data to IBM.

806f0813-2584ffff A Uncorrectable Bus Error has occurred on system [ComputerSystemElementName].

Explanation: A catastrophic system error has occurred. The system firmware will attempt to analyze the failure to determine whether the failure was due to a hardware component or a software component.

May also be shown as 806f08132584ffff or 0x806f08132584ffff

Severity: Error

Alert Category: Critical - Other

Serviceable: Yes

CIM Information: **Prefix:** PLAT and **ID:** 0240

SNMP Trap ID: 50

Automatically notify Support: Yes

User response:

1. Check http://www.ibm.com/supportportal/ for RETAIN tips or firmware updates that might correct the error.
2. Make sure that all I/O expansion adapters have correct and matching levels of device drivers and firmware.
3. Check the system-event log for additional information about failing components.
4. If there are no entries related to the error in the system-event log, contact IBM Support and send DSA data to IBM.

806f0823-2101ffff Watchdog Timer interrupt occurred for [WatchdogElementName].

Explanation: The IPMI watchdog timer has expired. A watchdog interrupt has occurred.

May also be shown as 806f08232101ffff or 0x806f08232101ffff

Severity: Info

Alert Category: System - Other

Serviceable: No

CIM Information: **Prefix:** PLAT and **ID:** 0376

SNMP Trap ID:

Automatically notify Support: No

User response: Information only; no action is required.

806f090c-2001ffff [PhysicalMemoryElementName] on Subsystem [MemoryElementName] Throttled.

Explanation: This message is for the use case when an implementation has detected Memory has been Throttled.

May also be shown as 806f090c2001ffff or 0x806f090c2001ffff

Severity: Warning

Alert Category: System - Other

Serviceable: Yes

CIM Information: **Prefix:** PLAT and **ID:** 0142

SNMP Trap ID: 22

Automatically notify Support: No

User response: Complete the following steps:

1. Check the CMM or FSM event log for any fan or cooling related issues.
2. Make sure that the airflow at the front and rear of the chassis is not obstructed and that fillers are in place and correctly installed.
3. Make sure that the room temperature is within operating specifications.
4. Make sure that the DIMM baffles are in place.
5. If the problem persists and there are no other DIMMs with the same indication, replace the DIMM.

806f090c-2002ffff [PhysicalMemoryElementName] on Subsystem [MemoryElementName] Throttled.

Explanation: This message is for the use case when an implementation has detected Memory has been Throttled.

May also be shown as 806f090c2002ffff or 0x806f090c2002ffff

Severity: Warning

Alert Category: System - Other

Serviceable: Yes

CIM Information: **Prefix:** PLAT and **ID:** 0142

SNMP Trap ID: 22

Automatically notify Support: No

User response: Complete the following steps:

1. Check the CMM or FSM event log for any fan or cooling related issues.
2. Make sure that the airflow at the front and rear of the chassis is not obstructed and that fillers are in place and correctly installed.
3. Make sure that the room temperature is within operating specifications.
4. Make sure that the DIMM baffles are in place.
5. If the problem persists and there are no other DIMMs with the same indication, replace the DIMM.

806f090c-2003ffff [PhysicalMemoryElementName] on Subsystem [MemoryElementName] Throttled.

Explanation: This message is for the use case when an implementation has detected Memory has been Throttled.

May also be shown as 806f090c2003ffff or 0x806f090c2003ffff

Severity: Warning

Alert Category: System - Other

Serviceable: Yes

CIM Information: **Prefix:** PLAT and **ID:** 0142

SNMP Trap ID: 22

Automatically notify Support: No

User response: Complete the following steps:

1. Check the CMM or FSM event log for any fan or cooling related issues.
2. Make sure that the airflow at the front and rear of the chassis is not obstructed and that fillers are in place and correctly installed.
3. Make sure that the room temperature is within operating specifications.
4. Make sure that the DIMM baffles are in place.
5. If the problem persists and there are no other DIMMs with the same indication, replace the DIMM.

806f090c-2004ffff [PhysicalMemoryElementName] on Subsystem [MemoryElementName] Throttled.

Explanation: This message is for the use case when an implementation has detected Memory has been Throttled.

May also be shown as 806f090c2004ffff or 0x806f090c2004ffff

Severity: Warning

Alert Category: System - Other

Serviceable: Yes

CIM Information: **Prefix:** PLAT and **ID:** 0142

SNMP Trap ID: 22

Automatically notify Support: No

User response: Complete the following steps:

1. Check the CMM or FSM event log for any fan or cooling related issues.
2. Make sure that the airflow at the front and rear of the chassis is not obstructed and that fillers are in place and correctly installed.
3. Make sure that the room temperature is within operating specifications.
4. Make sure that the DIMM baffles are in place.
5. If the problem persists and there are no other DIMMs with the same indication, replace the DIMM.

806f090c-2005ffff [PhysicalMemoryElementName] on Subsystem [MemoryElementName] Throttled.

Explanation: This message is for the use case when an implementation has detected Memory has been Throttled.

May also be shown as 806f090c2005ffff or 0x806f090c2005ffff

Severity: Warning

Alert Category: System - Other

Serviceable: Yes

CIM Information: **Prefix:** PLAT and **ID:** 0142

SNMP Trap ID: 22

Automatically notify Support: No

User response: Complete the following steps:

1. Check the CMM or FSM event log for any fan or cooling related issues.
2. Make sure that the airflow at the front and rear of the chassis is not obstructed and that fillers are in place and correctly installed.
3. Make sure that the room temperature is within operating specifications.
4. Make sure that the DIMM baffles are in place.
5. If the problem persists and there are no other DIMMs with the same indication, replace the DIMM.

806f090c-2006ffff [PhysicalMemoryElementName] on Subsystem [MemoryElementName] Throttled.

Explanation: This message is for the use case when an implementation has detected Memory has been Throttled.

May also be shown as 806f090c2006ffff or 0x806f090c2006ffff

Severity: Warning

Alert Category: System - Other

Serviceable: Yes

CIM Information: **Prefix:** PLAT and **ID:** 0142

SNMP Trap ID: 22

Automatically notify Support: No

User response: Complete the following steps:

1. Check the CMM or FSM event log for any fan or cooling related issues.
2. Make sure that the airflow at the front and rear of the chassis is not obstructed and that fillers are in place and correctly installed.
3. Make sure that the room temperature is within operating specifications.
4. Make sure that the DIMM baffles are in place.
5. If the problem persists and there are no other DIMMs with the same indication, replace the DIMM.

806f090c-2007ffff [PhysicalMemoryElementName] on Subsystem [MemoryElementName] Throttled.

Explanation: This message is for the use case when an implementation has detected Memory has been Throttled.

May also be shown as 806f090c2007ffff or 0x806f090c2007ffff

Severity: Warning

Alert Category: System - Other

Serviceable: Yes

CIM Information: **Prefix:** PLAT and **ID:** 0142

SNMP Trap ID: 22

Automatically notify Support: No

User response: Complete the following steps:

1. Check the CMM or FSM event log for any fan or cooling related issues.
2. Make sure that the airflow at the front and rear of the chassis is not obstructed and that fillers are in place and correctly installed.
3. Make sure that the room temperature is within operating specifications.
4. Make sure that the DIMM baffles are in place.
5. If the problem persists and there are no other DIMMs with the same indication, replace the DIMM.

806f090c-2008ffff [PhysicalMemoryElementName] on Subsystem [MemoryElementName] Throttled.

Explanation: This message is for the use case when an implementation has detected Memory has been Throttled.

May also be shown as 806f090c2008ffff or 0x806f090c2008ffff

Severity: Warning

Alert Category: System - Other

Serviceable: Yes

CIM Information: **Prefix:** PLAT and **ID:** 0142

SNMP Trap ID: 22

Automatically notify Support: No

User response: Complete the following steps:

1. Check the CMM or FSM event log for any fan or cooling related issues.
2. Make sure that the airflow at the front and rear of the chassis is not obstructed and that fillers are in place and correctly installed.
3. Make sure that the room temperature is within operating specifications.
4. Make sure that the DIMM baffles are in place.
5. If the problem persists and there are no other DIMMs with the same indication, replace the DIMM.

806f090c-2009ffff [PhysicalMemoryElementName] on Subsystem [MemoryElementName] Throttled.

Explanation: This message is for the use case when an implementation has detected Memory has been Throttled.

May also be shown as 806f090c2009ffff or 0x806f090c2009ffff

Severity: Warning

Alert Category: System - Other

Serviceable: Yes

CIM Information: **Prefix:** PLAT and **ID:** 0142

SNMP Trap ID: 22

Automatically notify Support: No

User response: Complete the following steps:

1. Check the CMM or FSM event log for any fan or cooling related issues.
2. Make sure that the airflow at the front and rear of the chassis is not obstructed and that fillers are in place and correctly installed.
3. Make sure that the room temperature is within operating specifications.
4. Make sure that the DIMM baffles are in place.
5. If the problem persists and there are no other DIMMs with the same indication, replace the DIMM.

806f090c-200affff [PhysicalMemoryElementName] on Subsystem [MemoryElementName] Throttled.

Explanation: This message is for the use case when an implementation has detected Memory has been Throttled.

May also be shown as 806f090c200affff or 0x806f090c200affff

Severity: Warning

Alert Category: System - Other

Serviceable: Yes

CIM Information: **Prefix:** PLAT and **ID:** 0142

SNMP Trap ID: 22

Automatically notify Support: No

User response: Complete the following steps:

1. Check the CMM or FSM event log for any fan or cooling related issues.
2. Make sure that the airflow at the front and rear of the chassis is not obstructed and that fillers are in place and correctly installed.
3. Make sure that the room temperature is within operating specifications.
4. Make sure that the DIMM baffles are in place.
5. If the problem persists and there are no other DIMMs with the same indication, replace the DIMM.

806f090c-200bffff [PhysicalMemoryElementName] on Subsystem [MemoryElementName] Throttled.

Explanation: This message is for the use case when an implementation has detected Memory has been Throttled.

May also be shown as 806f090c200bffff or 0x806f090c200bffff

Severity: Warning

Alert Category: System - Other

Serviceable: Yes

CIM Information: **Prefix:** PLAT and **ID:** 0142

SNMP Trap ID: 22

Automatically notify Support: No

User response: Complete the following steps:

1. Check the CMM or FSM event log for any fan or cooling related issues.
2. Make sure that the airflow at the front and rear of the chassis is not obstructed and that fillers are in place and correctly installed.
3. Make sure that the room temperature is within operating specifications.
4. Make sure that the DIMM baffles are in place.
5. If the problem persists and there are no other DIMMs with the same indication, replace the DIMM.

806f090c-200cffff [PhysicalMemoryElementName] on Subsystem [MemoryElementName] Throttled.

Explanation: This message is for the use case when an implementation has detected Memory has been Throttled.

May also be shown as 806f090c200cffff or 0x806f090c200cffff

Severity: Warning

Alert Category: System - Other

Serviceable: Yes

CIM Information: **Prefix:** PLAT and **ID:** 0142

SNMP Trap ID: 22

Automatically notify Support: No

User response: Complete the following steps:

1. Check the CMM or FSM event log for any fan or cooling related issues.
2. Make sure that the airflow at the front and rear of the chassis is not obstructed and that fillers are in place and correctly installed.
3. Make sure that the room temperature is within operating specifications.
4. Make sure that the DIMM baffles are in place.
5. If the problem persists and there are no other DIMMs with the same indication, replace the DIMM.

806f090c-200dffff [PhysicalMemoryElementName] on Subsystem [MemoryElementName] Throttled.

Explanation: This message is for the use case when an implementation has detected Memory has been Throttled.

May also be shown as 806f090c200dffff or 0x806f090c200dffff

Severity: Warning

Alert Category: System - Other

Serviceable: Yes

CIM Information: **Prefix:** PLAT and **ID:** 0142

SNMP Trap ID: 22

Automatically notify Support: No

User response: Complete the following steps:

1. Check the CMM or FSM event log for any fan or cooling related issues.
2. Make sure that the airflow at the front and rear of the chassis is not obstructed and that fillers are in place and correctly installed.
3. Make sure that the room temperature is within operating specifications.
4. Make sure that the DIMM baffles are in place.
5. If the problem persists and there are no other DIMMs with the same indication, replace the DIMM.

806f090c-200effff [PhysicalMemoryElementName] on Subsystem [MemoryElementName] Throttled.

Explanation: This message is for the use case when an implementation has detected Memory has been Throttled.

May also be shown as 806f090c200effff or 0x806f090c200effff

Severity: Warning

Alert Category: System - Other

Serviceable: Yes

CIM Information: **Prefix:** PLAT and **ID:** 0142

SNMP Trap ID: 22

Automatically notify Support: No

User response: Complete the following steps:

1. Check the CMM or FSM event log for any fan or cooling related issues.
2. Make sure that the airflow at the front and rear of the chassis is not obstructed and that fillers are in place and correctly installed.
3. Make sure that the room temperature is within operating specifications.
4. Make sure that the DIMM baffles are in place.
5. If the problem persists and there are no other DIMMs with the same indication, replace the DIMM.

806f090c-200fffff [PhysicalMemoryElementName] on Subsystem [MemoryElementName] Throttled.

Explanation: This message is for the use case when an implementation has detected Memory has been Throttled.

May also be shown as 806f090c200fffff or 0x806f090c200fffff

Severity: Warning

Alert Category: System - Other

Serviceable: Yes

CIM Information: **Prefix:** PLAT and **ID:** 0142

SNMP Trap ID: 22

Automatically notify Support: No

User response: Complete the following steps:

1. Check the CMM or FSM event log for any fan or cooling related issues.
2. Make sure that the airflow at the front and rear of the chassis is not obstructed and that fillers are in place and correctly installed.
3. Make sure that the room temperature is within operating specifications.
4. Make sure that the DIMM baffles are in place.
5. If the problem persists and there are no other DIMMs with the same indication, replace the DIMM.

806f090c-2010ffff [PhysicalMemoryElementName] on Subsystem [MemoryElementName] Throttled.

Explanation: This message is for the use case when an implementation has detected Memory has been Throttled.

May also be shown as 806f090c2010ffff or 0x806f090c2010ffff

Severity: Warning

Alert Category: System - Other

Serviceable: Yes

CIM Information: **Prefix:** PLAT and **ID:** 0142

SNMP Trap ID: 22

Automatically notify Support: No

User response: Complete the following steps:

1. Check the CMM or FSM event log for any fan or cooling related issues.
2. Make sure that the airflow at the front and rear of the chassis is not obstructed and that fillers are in place and correctly installed.
3. Make sure that the room temperature is within operating specifications.
4. Make sure that the DIMM baffles are in place.
5. If the problem persists and there are no other DIMMs with the same indication, replace the DIMM.

806f090c-2011ffff [PhysicalMemoryElementName] on Subsystem [MemoryElementName] Throttled.

Explanation: This message is for the use case when an implementation has detected Memory has been Throttled.

May also be shown as 806f090c2011ffff or 0x806f090c2011ffff

Severity: Warning

Alert Category: System - Other

Serviceable: Yes

CIM Information: **Prefix:** PLAT and **ID:** 0142

SNMP Trap ID: 22

Automatically notify Support: No

User response: Complete the following steps:

1. Check the CMM or FSM event log for any fan or cooling related issues.
2. Make sure that the airflow at the front and rear of the chassis is not obstructed and that fillers are in place and correctly installed.
3. Make sure that the room temperature is within operating specifications.
4. Make sure that the DIMM baffles are in place.
5. If the problem persists and there are no other DIMMs with the same indication, replace the DIMM.

806f090c-2012ffff [PhysicalMemoryElementName] on Subsystem [MemoryElementName] Throttled.

Explanation: This message is for the use case when an implementation has detected Memory has been Throttled.

May also be shown as 806f090c2012ffff or 0x806f090c2012ffff

Severity: Warning

Alert Category: System - Other

Serviceable: Yes

CIM Information: **Prefix:** PLAT and **ID:** 0142

SNMP Trap ID: 22

Automatically notify Support: No

User response: Complete the following steps:

1. Check the CMM or FSM event log for any fan or cooling related issues.
2. Make sure that the airflow at the front and rear of the chassis is not obstructed and that fillers are in place and correctly installed.
3. Make sure that the room temperature is within operating specifications.
4. Make sure that the DIMM baffles are in place.
5. If the problem persists and there are no other DIMMs with the same indication, replace the DIMM.

806f090c-2013ffff [PhysicalMemoryElementName] on Subsystem [MemoryElementName] Throttled.

Explanation: This message is for the use case when an implementation has detected Memory has been Throttled.

May also be shown as 806f090c2013ffff or 0x806f090c2013ffff

Severity: Warning

Alert Category: System - Other

Serviceable: Yes

CIM Information: **Prefix:** PLAT and **ID:** 0142

SNMP Trap ID: 22

Automatically notify Support: No

User response: Complete the following steps:

1. Check the CMM or FSM event log for any fan or cooling related issues.
2. Make sure that the airflow at the front and rear of the chassis is not obstructed and that fillers are in place and correctly installed.
3. Make sure that the room temperature is within operating specifications.
4. Make sure that the DIMM baffles are in place.
5. If the problem persists and there are no other DIMMs with the same indication, replace the DIMM.

806f090c-2014ffff [PhysicalMemoryElementName] on Subsystem [MemoryElementName] Throttled.

Explanation: This message is for the use case when an implementation has detected Memory has been Throttled.

May also be shown as 806f090c2014ffff or 0x806f090c2014ffff

Severity: Warning

Alert Category: System - Other

Serviceable: Yes

CIM Information: **Prefix:** PLAT and **ID:** 0142

SNMP Trap ID: 22

Automatically notify Support: No

User response: Complete the following steps:

1. Check the CMM or FSM event log for any fan or cooling related issues.
2. Make sure that the airflow at the front and rear of the chassis is not obstructed and that fillers are in place and correctly installed.
3. Make sure that the room temperature is within operating specifications.
4. Make sure that the DIMM baffles are in place.
5. If the problem persists and there are no other DIMMs with the same indication, replace the DIMM.

806f090c-2015ffff [PhysicalMemoryElementName] on Subsystem [MemoryElementName] Throttled.

Explanation: This message is for the use case when an implementation has detected Memory has been Throttled.

May also be shown as 806f090c2015ffff or 0x806f090c2015ffff

Severity: Warning

Alert Category: System - Other

Serviceable: Yes

CIM Information: **Prefix:** PLAT and **ID:** 0142

SNMP Trap ID: 22

Automatically notify Support: No

User response: Complete the following steps:

1. Check the CMM or FSM event log for any fan or cooling related issues.
2. Make sure that the airflow at the front and rear of the chassis is not obstructed and that fillers are in place and correctly installed.
3. Make sure that the room temperature is within operating specifications.
4. Make sure that the DIMM baffles are in place.
5. If the problem persists and there are no other DIMMs with the same indication, replace the DIMM.

806f090c-2016ffff [PhysicalMemoryElementName] on Subsystem [MemoryElementName] Throttled.

Explanation: This message is for the use case when an implementation has detected Memory has been Throttled.

May also be shown as 806f090c2016ffff or 0x806f090c2016ffff

Severity: Warning

Alert Category: System - Other

Serviceable: Yes

CIM Information: **Prefix:** PLAT and **ID:** 0142

SNMP Trap ID: 22

Automatically notify Support: No

User response: Complete the following steps:

1. Check the CMM or FSM event log for any fan or cooling related issues.
2. Make sure that the airflow at the front and rear of the chassis is not obstructed and that fillers are in place and correctly installed.
3. Make sure that the room temperature is within operating specifications.
4. Make sure that the DIMM baffles are in place.
5. If the problem persists and there are no other DIMMs with the same indication, replace the DIMM.

806f090c-2017ffff [PhysicalMemoryElementName] on Subsystem [MemoryElementName] Throttled.

Explanation: This message is for the use case when an implementation has detected Memory has been Throttled.

May also be shown as 806f090c2017ffff or 0x806f090c2017ffff

Severity: Warning

Alert Category: System - Other

Serviceable: Yes

CIM Information: **Prefix:** PLAT and **ID:** 0142

SNMP Trap ID: 22

Automatically notify Support: No

User response: Complete the following steps:

1. Check the CMM or FSM event log for any fan or cooling related issues.
2. Make sure that the airflow at the front and rear of the chassis is not obstructed and that fillers are in place and correctly installed.
3. Make sure that the room temperature is within operating specifications.
4. Make sure that the DIMM baffles are in place.
5. If the problem persists and there are no other DIMMs with the same indication, replace the DIMM.

806f090c-2018ffff [PhysicalMemoryElementName] on Subsystem [MemoryElementName] Throttled.

Explanation: This message is for the use case when an implementation has detected Memory has been Throttled.

May also be shown as 806f090c2018ffff or 0x806f090c2018ffff

Severity: Warning

Alert Category: System - Other

Serviceable: Yes

CIM Information: **Prefix:** PLAT and **ID:** 0142

SNMP Trap ID: 22

Automatically notify Support: No

User response: Complete the following steps:

1. Check the CMM or FSM event log for any fan or cooling related issues.
2. Make sure that the airflow at the front and rear of the chassis is not obstructed and that fillers are in place and correctly installed.
3. Make sure that the room temperature is within operating specifications.
4. Make sure that the DIMM baffles are in place.
5. If the problem persists and there are no other DIMMs with the same indication, replace the DIMM.

806f090c-2019ffff [PhysicalMemoryElementName] on Subsystem [MemoryElementName] Throttled.

Explanation: This message is for the use case when an implementation has detected Memory has been Throttled.

May also be shown as 806f090c2019ffff or 0x806f090c2019ffff

Severity: Warning

Alert Category: System - Other

Serviceable: Yes

CIM Information: **Prefix:** PLAT and **ID:** 0142

SNMP Trap ID: 22

Automatically notify Support: No

User response: Complete the following steps:

1. Check the CMM or FSM event log for any fan or cooling related issues.
2. Make sure that the airflow at the front and rear of the chassis is not obstructed and that fillers are in place and correctly installed.
3. Make sure that the room temperature is within operating specifications.
4. Make sure that the DIMM baffles are in place.
5. If the problem persists and there are no other DIMMs with the same indication, replace the DIMM.

806f090c-201affff [PhysicalMemoryElementName] on Subsystem [MemoryElementName] Throttled.

Explanation: This message is for the use case when an implementation has detected Memory has been Throttled.

May also be shown as 806f090c201affff or 0x806f090c201affff

Severity: Warning

Alert Category: System - Other

Serviceable: Yes

CIM Information: **Prefix:** PLAT and **ID:** 0142

SNMP Trap ID: 22

Automatically notify Support: No

User response: Complete the following steps:

1. Check the CMM or FSM event log for any fan or cooling related issues.
2. Make sure that the airflow at the front and rear of the chassis is not obstructed and that fillers are in place and correctly installed.
3. Make sure that the room temperature is within operating specifications.
4. Make sure that the DIMM baffles are in place.
5. If the problem persists and there are no other DIMMs with the same indication, replace the DIMM.

806f090c-201bffff [PhysicalMemoryElementName] on Subsystem [MemoryElementName] Throttled.

Explanation: This message is for the use case when an implementation has detected Memory has been Throttled.

May also be shown as 806f090c201bffff or 0x806f090c201bffff

Severity: Warning

Alert Category: System - Other

Serviceable: Yes

CIM Information: **Prefix:** PLAT and **ID:** 0142

SNMP Trap ID: 22

Automatically notify Support: No

User response: Complete the following steps:

1. Check the CMM or FSM event log for any fan or cooling related issues.
2. Make sure that the airflow at the front and rear of the chassis is not obstructed and that fillers are in place and correctly installed.
3. Make sure that the room temperature is within operating specifications.
4. Make sure that the DIMM baffles are in place.
5. If the problem persists and there are no other DIMMs with the same indication, replace the DIMM.

806f090c-201cffff [PhysicalMemoryElementName] on Subsystem [MemoryElementName] Throttled.

Explanation: This message is for the use case when an implementation has detected Memory has been Throttled.

May also be shown as 806f090c201cffff or 0x806f090c201cffff

Severity: Warning

Alert Category: System - Other

Serviceable: Yes

CIM Information: **Prefix:** PLAT and **ID:** 0142

SNMP Trap ID: 22

Automatically notify Support: No

User response: Complete the following steps:

1. Check the CMM or FSM event log for any fan or cooling related issues.
2. Make sure that the airflow at the front and rear of the chassis is not obstructed and that fillers are in place and correctly installed.
3. Make sure that the room temperature is within operating specifications.
4. Make sure that the DIMM baffles are in place.
5. If the problem persists and there are no other DIMMs with the same indication, replace the DIMM.

806f090c-201dffff [PhysicalMemoryElementName] on Subsystem [MemoryElementName] Throttled.

Explanation: This message is for the use case when an implementation has detected Memory has been Throttled.

May also be shown as 806f090c201dffff or 0x806f090c201dffff

Severity: Warning

Alert Category: System - Other

Serviceable: Yes

CIM Information: **Prefix:** PLAT and **ID:** 0142

SNMP Trap ID: 22

Automatically notify Support: No

User response: Complete the following steps:

1. Check the CMM or FSM event log for any fan or cooling related issues.
2. Make sure that the airflow at the front and rear of the chassis is not obstructed and that fillers are in place and correctly installed.
3. Make sure that the room temperature is within operating specifications.
4. Make sure that the DIMM baffles are in place.
5. If the problem persists and there are no other DIMMs with the same indication, replace the DIMM.

806f090c-201effff [PhysicalMemoryElementName] on Subsystem [MemoryElementName] Throttled.

Explanation: This message is for the use case when an implementation has detected Memory has been Throttled.

May also be shown as 806f090c201effff or 0x806f090c201effff

Severity: Warning

Alert Category: System - Other

Serviceable: Yes

CIM Information: **Prefix:** PLAT and **ID:** 0142

SNMP Trap ID: 22

Automatically notify Support: No

User response: Complete the following steps:

1. Check the CMM or FSM event log for any fan or cooling related issues.
2. Make sure that the airflow at the front and rear of the chassis is not obstructed and that fillers are in place and correctly installed.
3. Make sure that the room temperature is within operating specifications.
4. Make sure that the DIMM baffles are in place.
5. If the problem persists and there are no other DIMMs with the same indication, replace the DIMM.

806f090c-201fffff [PhysicalMemoryElementName] on Subsystem [MemoryElementName] Throttled.

Explanation: This message is for the use case when an implementation has detected Memory has been Throttled.

May also be shown as 806f090c201fffff or 0x806f090c201fffff

Severity: Warning

Alert Category: System - Other

Serviceable: Yes

CIM Information: **Prefix:** PLAT and **ID:** 0142

SNMP Trap ID: 22

Automatically notify Support: No

User response: Complete the following steps:

1. Check the CMM or FSM event log for any fan or cooling related issues.
2. Make sure that the airflow at the front and rear of the chassis is not obstructed and that fillers are in place and correctly installed.
3. Make sure that the room temperature is within operating specifications.
4. Make sure that the DIMM baffles are in place.
5. If the problem persists and there are no other DIMMs with the same indication, replace the DIMM.

806f090c-2020ffff [PhysicalMemoryElementName] on Subsystem [MemoryElementName] Throttled.

Explanation: This message is for the use case when an implementation has detected Memory has been Throttled.

May also be shown as 806f090c2020ffff or 0x806f090c2020ffff

Severity: Warning

Alert Category: System - Other

Serviceable: Yes

CIM Information: **Prefix:** PLAT and **ID:** 0142

SNMP Trap ID: 22

Automatically notify Support: No

User response: Complete the following steps:

1. Check the CMM or FSM event log for any fan or cooling related issues.
2. Make sure that the airflow at the front and rear of the chassis is not obstructed and that fillers are in place and correctly installed.
3. Make sure that the room temperature is within operating specifications.
4. Make sure that the DIMM baffles are in place.
5. If the problem persists and there are no other DIMMs with the same indication, replace the DIMM.

806f090c-2021ffff [PhysicalMemoryElementName] on Subsystem [MemoryElementName] Throttled.

Explanation: This message is for the use case when an implementation has detected Memory has been Throttled.

May also be shown as 806f090c2021ffff or 0x806f090c2021ffff

Severity: Warning

Alert Category: System - Other

Serviceable: Yes

CIM Information: **Prefix:** PLAT and **ID:** 0142

SNMP Trap ID: 22

Automatically notify Support: No

User response: Complete the following steps:

1. Check the CMM or FSM event log for any fan or cooling related issues.
2. Make sure that the airflow at the front and rear of the chassis is not obstructed and that fillers are in place and correctly installed.
3. Make sure that the room temperature is within operating specifications.
4. Make sure that the DIMM baffles are in place.
5. If the problem persists and there are no other DIMMs with the same indication, replace the DIMM.

806f090c-2022ffff [PhysicalMemoryElementName] on Subsystem [MemoryElementName] Throttled.

Explanation: This message is for the use case when an implementation has detected Memory has been Throttled.

May also be shown as 806f090c2022ffff or 0x806f090c2022ffff

Severity: Warning

Alert Category: System - Other

Serviceable: Yes

CIM Information: **Prefix:** PLAT and **ID:** 0142

SNMP Trap ID: 22

Automatically notify Support: No

User response: Complete the following steps:

1. Check the CMM or FSM event log for any fan or cooling related issues.
2. Make sure that the airflow at the front and rear of the chassis is not obstructed and that fillers are in place and correctly installed.
3. Make sure that the room temperature is within operating specifications.
4. Make sure that the DIMM baffles are in place.
5. If the problem persists and there are no other DIMMs with the same indication, replace the DIMM.

806f090c-2023ffff [PhysicalMemoryElementName] on Subsystem [MemoryElementName] Throttled.

Explanation: This message is for the use case when an implementation has detected Memory has been Throttled.

May also be shown as 806f090c2023ffff or 0x806f090c2023ffff

Severity: Warning

Alert Category: System - Other

Serviceable: Yes

CIM Information: **Prefix:** PLAT and **ID:** 0142

SNMP Trap ID: 22

Automatically notify Support: No

User response: Complete the following steps:

1. Check the CMM or FSM event log for any fan or cooling related issues.
2. Make sure that the airflow at the front and rear of the chassis is not obstructed and that fillers are in place and correctly installed.
3. Make sure that the room temperature is within operating specifications.
4. Make sure that the DIMM baffles are in place.
5. If the problem persists and there are no other DIMMs with the same indication, replace the DIMM.

806f090c-2024ffff [PhysicalMemoryElementName] on Subsystem [MemoryElementName] Throttled.

Explanation: This message is for the use case when an implementation has detected Memory has been Throttled.

May also be shown as 806f090c2024ffff or 0x806f090c2024ffff

Severity: Warning

Alert Category: System - Other

Serviceable: Yes

CIM Information: **Prefix:** PLAT and **ID:** 0142

SNMP Trap ID: 22

Automatically notify Support: No

User response: Complete the following steps:

1. Check the CMM or FSM event log for any fan or cooling related issues.
2. Make sure that the airflow at the front and rear of the chassis is not obstructed and that fillers are in place and correctly installed.
3. Make sure that the room temperature is within operating specifications.
4. Make sure that the DIMM baffles are in place.
5. If the problem persists and there are no other DIMMs with the same indication, replace the DIMM.

806f090c-2025ffff [PhysicalMemoryElementName] on Subsystem [MemoryElementName] Throttled.

Explanation: This message is for the use case when an implementation has detected Memory has been Throttled.

May also be shown as 806f090c2025ffff or 0x806f090c2025ffff

Severity: Warning

Alert Category: System - Other

Serviceable: Yes

CIM Information: **Prefix:** PLAT and **ID:** 0142

SNMP Trap ID: 22

Automatically notify Support: No

User response: Complete the following steps:

1. Check the CMM or FSM event log for any fan or cooling related issues.
2. Make sure that the airflow at the front and rear of the chassis is not obstructed and that fillers are in place and correctly installed.
3. Make sure that the room temperature is within operating specifications.
4. Make sure that the DIMM baffles are in place.
5. If the problem persists and there are no other DIMMs with the same indication, replace the DIMM.

806f090c-2026ffff [PhysicalMemoryElementName] on Subsystem [MemoryElementName] Throttled.

Explanation: This message is for the use case when an implementation has detected Memory has been Throttled.

May also be shown as 806f090c2026ffff or 0x806f090c2026ffff

Severity: Warning

Alert Category: System - Other

Serviceable: Yes

CIM Information: **Prefix:** PLAT and **ID:** 0142

SNMP Trap ID: 22

Automatically notify Support: No

User response: Complete the following steps:

1. Check the CMM or FSM event log for any fan or cooling related issues.
2. Make sure that the airflow at the front and rear of the chassis is not obstructed and that fillers are in place and correctly installed.
3. Make sure that the room temperature is within operating specifications.
4. Make sure that the DIMM baffles are in place.
5. If the problem persists and there are no other DIMMs with the same indication, replace the DIMM.

806f090c-2027ffff [PhysicalMemoryElementName] on Subsystem [MemoryElementName] Throttled.

Explanation: This message is for the use case when an implementation has detected Memory has been Throttled.

May also be shown as 806f090c2027ffff or 0x806f090c2027ffff

Severity: Warning

Alert Category: System - Other

Serviceable: Yes

CIM Information: **Prefix:** PLAT and **ID:** 0142

SNMP Trap ID: 22

Automatically notify Support: No

User response: Complete the following steps:

1. Check the CMM or FSM event log for any fan or cooling related issues.
2. Make sure that the airflow at the front and rear of the chassis is not obstructed and that fillers are in place and correctly installed.
3. Make sure that the room temperature is within operating specifications.
4. Make sure that the DIMM baffles are in place.
5. If the problem persists and there are no other DIMMs with the same indication, replace the DIMM.

806f090c-2028ffff [PhysicalMemoryElementName] on Subsystem [MemoryElementName] Throttled.

Explanation: This message is for the use case when an implementation has detected Memory has been Throttled.

May also be shown as 806f090c2028ffff or 0x806f090c2028ffff

Severity: Warning

Alert Category: System - Other

Serviceable: Yes

CIM Information: **Prefix:** PLAT and **ID:** 0142

SNMP Trap ID: 22

Automatically notify Support: No

User response: Complete the following steps:

1. Check the CMM or FSM event log for any fan or cooling related issues.
2. Make sure that the airflow at the front and rear of the chassis is not obstructed and that fillers are in place and correctly installed.
3. Make sure that the room temperature is within operating specifications.
4. Make sure that the DIMM baffles are in place.
5. If the problem persists and there are no other DIMMs with the same indication, replace the DIMM.

806f090c-2029ffff [PhysicalMemoryElementName] on Subsystem [MemoryElementName] Throttled.

Explanation: This message is for the use case when an implementation has detected Memory has been Throttled.

May also be shown as 806f090c2029ffff or 0x806f090c2029ffff

Severity: Warning

Alert Category: System - Other

Serviceable: Yes

CIM Information: **Prefix:** PLAT and **ID:** 0142

SNMP Trap ID: 22

Automatically notify Support: No

User response: Complete the following steps:

1. Check the CMM or FSM event log for any fan or cooling related issues.
2. Make sure that the airflow at the front and rear of the chassis is not obstructed and that fillers are in place and correctly installed.
3. Make sure that the room temperature is within operating specifications.
4. Make sure that the DIMM baffles are in place.
5. If the problem persists and there are no other DIMMs with the same indication, replace the DIMM.

806f090c-202affff [PhysicalMemoryElementName] on Subsystem [MemoryElementName] Throttled.

Explanation: This message is for the use case when an implementation has detected Memory has been Throttled.

May also be shown as 806f090c202affff or 0x806f090c202affff

Severity: Warning

Alert Category: System - Other

Serviceable: Yes

CIM Information: **Prefix:** PLAT and **ID:** 0142

SNMP Trap ID: 22

Automatically notify Support: No

User response: Complete the following steps:

1. Check the CMM or FSM event log for any fan or cooling related issues.
2. Make sure that the airflow at the front and rear of the chassis is not obstructed and that fillers are in place and correctly installed.
3. Make sure that the room temperature is within operating specifications.
4. Make sure that the DIMM baffles are in place.
5. If the problem persists and there are no other DIMMs with the same indication, replace the DIMM.

806f090c-202bffff [PhysicalMemoryElementName] on Subsystem [MemoryElementName] Throttled.

Explanation: This message is for the use case when an implementation has detected Memory has been Throttled.

May also be shown as 806f090c202bffff or 0x806f090c202bffff

Severity: Warning

Alert Category: System - Other

Serviceable: Yes

CIM Information: **Prefix:** PLAT and **ID:** 0142

SNMP Trap ID: 22

Automatically notify Support: No

User response: Complete the following steps:

1. Check the CMM or FSM event log for any fan or cooling related issues.
2. Make sure that the airflow at the front and rear of the chassis is not obstructed and that fillers are in place and correctly installed.
3. Make sure that the room temperature is within operating specifications.
4. Make sure that the DIMM baffles are in place.
5. If the problem persists and there are no other DIMMs with the same indication, replace the DIMM.

806f090c-202cffff [PhysicalMemoryElementName] on Subsystem [MemoryElementName] Throttled.

Explanation: This message is for the use case when an implementation has detected Memory has been Throttled.

May also be shown as 806f090c202cffff or 0x806f090c202cffff

Severity: Warning

Alert Category: System - Other

Serviceable: Yes

CIM Information: **Prefix:** PLAT and **ID:** 0142

SNMP Trap ID: 22

Automatically notify Support: No

User response: Complete the following steps:

1. Check the CMM or FSM event log for any fan or cooling related issues.
2. Make sure that the airflow at the front and rear of the chassis is not obstructed and that fillers are in place and correctly installed.
3. Make sure that the room temperature is within operating specifications.
4. Make sure that the DIMM baffles are in place.
5. If the problem persists and there are no other DIMMs with the same indication, replace the DIMM.

806f090c-202dffff [PhysicalMemoryElementName] on Subsystem [MemoryElementName] Throttled.

Explanation: This message is for the use case when an implementation has detected Memory has been Throttled.

May also be shown as 806f090c202dffff or 0x806f090c202dffff

Severity: Warning

Alert Category: System - Other

Serviceable: Yes

CIM Information: **Prefix:** PLAT and **ID:** 0142

SNMP Trap ID: 22

Automatically notify Support: No

User response: Complete the following steps:

1. Check the CMM or FSM event log for any fan or cooling related issues.
2. Make sure that the airflow at the front and rear of the chassis is not obstructed and that fillers are in place and correctly installed.
3. Make sure that the room temperature is within operating specifications.
4. Make sure that the DIMM baffles are in place.
5. If the problem persists and there are no other DIMMs with the same indication, replace the DIMM.

806f090c-202effff [PhysicalMemoryElementName] on Subsystem [MemoryElementName] Throttled.

Explanation: This message is for the use case when an implementation has detected Memory has been Throttled.

May also be shown as 806f090c202effff or 0x806f090c202effff

Severity: Warning

Alert Category: System - Other

Serviceable: Yes

CIM Information: **Prefix:** PLAT and **ID:** 0142

SNMP Trap ID: 22

Automatically notify Support: No

User response: Complete the following steps:

1. Check the CMM or FSM event log for any fan or cooling related issues.
2. Make sure that the airflow at the front and rear of the chassis is not obstructed and that fillers are in place and correctly installed.
3. Make sure that the room temperature is within operating specifications.
4. Make sure that the DIMM baffles are in place.
5. If the problem persists and there are no other DIMMs with the same indication, replace the DIMM.

806f090c-202fffff [PhysicalMemoryElementName] on Subsystem [MemoryElementName] Throttled.

Explanation: This message is for the use case when an implementation has detected Memory has been Throttled.

May also be shown as 806f090c202fffff or 0x806f090c202fffff

Severity: Warning

Alert Category: System - Other

Serviceable: Yes

CIM Information: **Prefix:** PLAT and **ID:** 0142

SNMP Trap ID: 22

Automatically notify Support: No

User response: Complete the following steps:

1. Check the CMM or FSM event log for any fan or cooling related issues.
2. Make sure that the airflow at the front and rear of the chassis is not obstructed and that fillers are in place and correctly installed.
3. Make sure that the room temperature is within operating specifications.
4. Make sure that the DIMM baffles are in place.
5. If the problem persists and there are no other DIMMs with the same indication, replace the DIMM.

806f090c-2030ffff [PhysicalMemoryElementName] on Subsystem [MemoryElementName] Throttled.

Explanation: This message is for the use case when an implementation has detected Memory has been Throttled.

May also be shown as 806f090c2030ffff or 0x806f090c2030ffff

Severity: Warning

Alert Category: System - Other

Serviceable: Yes

CIM Information: **Prefix:** PLAT and **ID:** 0142

SNMP Trap ID: 22

Automatically notify Support: No

User response: Complete the following steps:

1. Check the CMM or FSM event log for any fan or cooling related issues.
2. Make sure that the airflow at the front and rear of the chassis is not obstructed and that fillers are in place and correctly installed.
3. Make sure that the room temperature is within operating specifications.
4. Make sure that the DIMM baffles are in place.
5. If the problem persists and there are no other DIMMs with the same indication, replace the DIMM.

806f090c-2581ffff [PhysicalMemoryElementName] on Subsystem [MemoryElementName] Throttled.

Explanation: This message is for the use case when an implementation has detected Memory has been Throttled. All DIMMs. One of the DIMMs.

May also be shown as 806f090c2581ffff or 0x806f090c2581ffff

Severity: Warning

Alert Category: System - Other

Serviceable: Yes

CIM Information: **Prefix:** PLAT and **ID:** 0142

SNMP Trap ID: 22

Automatically notify Support: No

User response: Complete the following steps:

1. Check the CMM or FSM event log for any fan or cooling related issues.
2. Make sure that the airflow at the front and rear of the chassis is not obstructed and that fillers are in place and correctly installed.
3. Make sure that the room temperature is within operating specifications.
4. Make sure that the DIMM baffles are in place.
5. If the problem persists and there are no other DIMMs with the same indication, replace the DIMM.

806f0a07-0301ffff CPU 1 is operating in a Degraded State.

Explanation: The processor is being throttled due to thermal or power conditions.

May also be shown as 806f0a070301ffff or 0x806f0a070301ffff

Severity: Warning

Alert Category: Warning - CPU

Serviceable: Yes

CIM Information: **Prefix:** PLAT and **ID:** 0038

SNMP Trap ID: 42

Automatically notify Support: No

User response: Complete the following steps:

1. Check the CMM or FSM event log for any fan- or cooling-related issues or power-related issues..
2. Make sure that the airflow at the front and rear of the chassis is not obstructed and that fillers are in place and correctly installed.
3. Make sure that the room temperature is within operating specifications.

806f0a07-0302ffff CPU 2 is operating in a Degraded State.

Explanation: The processor is being throttled due to thermal or power conditions.

May also be shown as 806f0a070302ffff or 0x806f0a070302ffff

Severity: Warning

Alert Category: Warning - CPU

Serviceable: Yes

CIM Information: **Prefix:** PLAT and **ID:** 0038

SNMP Trap ID: 42

Automatically notify Support: No

User response: Complete the following steps:

1. Check the CMM or FSM event log for any fan- or cooling-related issues or power-related issues..
2. Make sure that the airflow at the front and rear of the chassis is not obstructed and that fillers are in place and correctly installed.
3. Make sure that the room temperature is within operating specifications.

806f0a07-0303ffff [ProcessorElementName] is operating in a Degraded State.

Explanation: The processor is being throttled due to thermal or power conditions.

May also be shown as 806f0a070303ffff or 0x806f0a070303ffff

Severity: Warning

Alert Category: Warning - CPU

Serviceable: Yes

CIM Information: **Prefix:** PLAT and **ID:** 0038

SNMP Trap ID: 42

Automatically notify Support: No

User response: Complete the following steps:

1. Check the CMM or FSM event log for any fan- or cooling-related issues or power-related issues..
2. Make sure that the airflow at the front and rear of the chassis is not obstructed and that fillers are in place and correctly installed.
3. Make sure that the room temperature is within operating specifications.

806f0a07-0304ffff [ProcessorElementName] is operating in a Degraded State.

Explanation: The processor is being throttled due to thermal or power conditions.

May also be shown as 806f0a070304ffff or 0x806f0a070304ffff

Severity: Warning

Alert Category: Warning - CPU

Serviceable: Yes

CIM Information: **Prefix:** PLAT and **ID:** 0038

SNMP Trap ID: 42

Automatically notify Support: No

User response: Complete the following steps:

1. Check the CMM or FSM event log for any fan- or cooling-related issues or power-related issues..
2. Make sure that the airflow at the front and rear of the chassis is not obstructed and that fillers are in place and correctly installed.
3. Make sure that the room temperature is within operating specifications.

806f0a07-2584ffff [ProcessorElementName] is operating in a Degraded State.

Explanation: Processor(s) ares being throttled due to thermal or power conditions.

May also be shown as 806f0a072584ffff or 0x806f0a072584ffff

Severity: Warning

Alert Category: Warning - CPU

Serviceable: Yes

CIM Information: **Prefix:** PLAT and **ID:** 0038

SNMP Trap ID: 42

Automatically notify Support: No

User response: Complete the following steps:

1. Check the CMM or FSM event log for any fan- or cooling-related issues or power-related issues..
2. Make sure that the airflow at the front and rear of the chassis is not obstructed and that fillers are in place and correctly installed.
3. Make sure that the room temperature is within operating specifications.

806f0a0c-2001ffff An Over-Temperature Condition has been detected on the [PhysicalMemoryElementName] on Subsystem [MemoryElementName].

Explanation: This message is for the use case when an implementation has detected an Over Temperature Condition for Memory that has been Detected.

May also be shown as 806f0a0c2001ffff or 0x806f0a0c2001ffff

Severity: Error

Alert Category: Critical - Temperature

Serviceable: Yes

CIM Information: **Prefix:** PLAT and **ID:** 0146

SNMP Trap ID: 0

Automatically notify Support: No

User response: Complete the following steps:

1. Check the CMM or FSM event log for any fan or cooling related issues.
2. Make sure that the airflow at the front and rear of the chassis is not obstructed and that fillers are in place and correctly installed.
3. Make sure that the room temperature is within operating specifications.
4. Make sure that the DIMM baffles are in place.
5. If the problem persists and there are no other DIMMs with the same indication, replace the DIMM.

806f0a0c-2002ffff An Over-Temperature Condition has been detected on the [PhysicalMemoryElementName] on Subsystem [MemoryElementName].

Explanation: This message is for the use case when an implementation has detected an Over Temperature Condition for Memory that has been Detected.

May also be shown as 806f0a0c2002ffff or 0x806f0a0c2002ffff

Severity: Error

Alert Category: Critical - Temperature

Serviceable: Yes

CIM Information: **Prefix:** PLAT and **ID:** 0146

SNMP Trap ID: 0

Automatically notify Support: No

User response: Complete the following steps:

1. Check the CMM or FSM event log for any fan or cooling related issues.
2. Make sure that the airflow at the front and rear of the chassis is not obstructed and that fillers are in place and correctly installed.
3. Make sure that the room temperature is within operating specifications.
4. Make sure that the DIMM baffles are in place.
5. If the problem persists and there are no other DIMMs with the same indication, replace the DIMM.

806f0a0c-2003ffff An Over-Temperature Condition has been detected on the [PhysicalMemoryElementName] on Subsystem [MemoryElementName].

Explanation: This message is for the use case when an implementation has detected an Over Temperature Condition for Memory that has been Detected.

May also be shown as 806f0a0c2003ffff or 0x806f0a0c2003ffff

Severity: Error

Alert Category: Critical - Temperature

Serviceable: Yes

CIM Information: **Prefix:** PLAT and **ID:** 0146

SNMP Trap ID: 0

Automatically notify Support: No

User response: Complete the following steps:

1. Check the CMM or FSM event log for any fan or cooling related issues.
2. Make sure that the airflow at the front and rear of the chassis is not obstructed and that fillers are in place and correctly installed.
3. Make sure that the room temperature is within operating specifications.
4. Make sure that the DIMM baffles are in place.
5. If the problem persists and there are no other DIMMs with the same indication, replace the DIMM.

806f0a0c-2004ffff An Over-Temperature Condition has been detected on the [PhysicalMemoryElementName] on Subsystem [MemoryElementName].

Explanation: This message is for the use case when an implementation has detected an Over Temperature Condition for Memory that has been Detected.

May also be shown as 806f0a0c2004ffff or 0x806f0a0c2004ffff

Severity: Error

Alert Category: Critical - Temperature

Serviceable: Yes

CIM Information: **Prefix:** PLAT and **ID:** 0146

SNMP Trap ID: 0

Automatically notify Support: No

User response: Complete the following steps:

1. Check the CMM or FSM event log for any fan or cooling related issues.
2. Make sure that the airflow at the front and rear of the chassis is not obstructed and that fillers are in place and correctly installed.
3. Make sure that the room temperature is within operating specifications.
4. Make sure that the DIMM baffles are in place.
5. If the problem persists and there are no other DIMMs with the same indication, replace the DIMM.

806f0a0c-2005ffff An Over-Temperature Condition has been detected on the [PhysicalMemoryElementName] on Subsystem [MemoryElementName].

Explanation: This message is for the use case when an implementation has detected an Over Temperature Condition for Memory that has been Detected.

May also be shown as 806f0a0c2005ffff or 0x806f0a0c2005ffff

Severity: Error

Alert Category: Critical - Temperature

Serviceable: Yes

CIM Information: **Prefix:** PLAT and **ID:** 0146

SNMP Trap ID: 0

Automatically notify Support: No

User response: Complete the following steps:

1. Check the CMM or FSM event log for any fan or cooling related issues.
2. Make sure that the airflow at the front and rear of the chassis is not obstructed and that fillers are in place and correctly installed.
3. Make sure that the room temperature is within operating specifications.
4. Make sure that the DIMM baffles are in place.
5. If the problem persists and there are no other DIMMs with the same indication, replace the DIMM.

806f0a0c-2006ffff An Over-Temperature Condition has been detected on the [PhysicalMemoryElementName] on Subsystem [MemoryElementName].

Explanation: This message is for the use case when an implementation has detected an Over Temperature Condition for Memory that has been Detected.

May also be shown as 806f0a0c2006ffff or 0x806f0a0c2006ffff

Severity: Error

Alert Category: Critical - Temperature

Serviceable: Yes

CIM Information: **Prefix:** PLAT and **ID:** 0146

SNMP Trap ID: 0

Automatically notify Support: No

User response: Complete the following steps:

1. Check the CMM or FSM event log for any fan or cooling related issues.
2. Make sure that the airflow at the front and rear of the chassis is not obstructed and that fillers are in place and correctly installed.
3. Make sure that the room temperature is within operating specifications.
4. Make sure that the DIMM baffles are in place.
5. If the problem persists and there are no other DIMMs with the same indication, replace the DIMM.

806f0a0c-2007ffff An Over-Temperature Condition has been detected on the [PhysicalMemoryElementName] on Subsystem [MemoryElementName].

Explanation: This message is for the use case when an implementation has detected an Over Temperature Condition for Memory that has been Detected.

May also be shown as 806f0a0c2007ffff or 0x806f0a0c2007ffff

Severity: Error

Alert Category: Critical - Temperature

Serviceable: Yes

CIM Information: **Prefix:** PLAT and **ID:** 0146

SNMP Trap ID: 0

Automatically notify Support: No

User response: Complete the following steps:

1. Check the CMM or FSM event log for any fan or cooling related issues.

2. Make sure that the airflow at the front and rear of the chassis is not obstructed and that fillers are in place and correctly installed.
3. Make sure that the room temperature is within operating specifications.
4. Make sure that the DIMM baffles are in place.
5. If the problem persists and there are no other DIMMs with the same indication, replace the DIMM.

806f0a0c-2008ffff An Over-Temperature Condition has been detected on the [PhysicalMemoryElementName] on Subsystem [MemoryElementName].

Explanation: This message is for the use case when an implementation has detected an Over Temperature Condition for Memory that has been Detected.

May also be shown as 806f0a0c2008ffff or 0x806f0a0c2008ffff

Severity: Error

Alert Category: Critical - Temperature

Serviceable: Yes

CIM Information: **Prefix:** PLAT and **ID:** 0146

SNMP Trap ID: 0

Automatically notify Support: No

User response: Complete the following steps:

1. Check the CMM or FSM event log for any fan or cooling related issues.
2. Make sure that the airflow at the front and rear of the chassis is not obstructed and that fillers are in place and correctly installed.
3. Make sure that the room temperature is within operating specifications.
4. Make sure that the DIMM baffles are in place.
5. If the problem persists and there are no other DIMMs with the same indication, replace the DIMM.

806f0a0c-2009ffff An Over-Temperature Condition has been detected on the [PhysicalMemoryElementName] on Subsystem [MemoryElementName].

Explanation: This message is for the use case when an implementation has detected an Over Temperature Condition for Memory that has been Detected.

May also be shown as 806f0a0c2009ffff or 0x806f0a0c2009ffff

Severity: Error

Alert Category: Critical - Temperature

Serviceable: Yes

CIM Information: **Prefix:** PLAT and **ID:** 0146

SNMP Trap ID: 0

Automatically notify Support: No

User response: Complete the following steps:

1. Check the CMM or FSM event log for any fan or cooling related issues.
2. Make sure that the airflow at the front and rear of the chassis is not obstructed and that fillers are in place and correctly installed.
3. Make sure that the room temperature is within operating specifications.
4. Make sure that the DIMM baffles are in place.
5. If the problem persists and there are no other DIMMs with the same indication, replace the DIMM.

806f0a0c-200affff An Over-Temperature Condition has been detected on the [PhysicalMemoryElementName] on Subsystem [MemoryElementName].

Explanation: This message is for the use case when an implementation has detected an Over Temperature Condition for Memory that has been Detected.

May also be shown as 806f0a0c200affff or 0x806f0a0c200affff

Severity: Error

Alert Category: Critical - Temperature

Serviceable: Yes

CIM Information: **Prefix:** PLAT and **ID:** 0146

SNMP Trap ID: 0

Automatically notify Support: No

User response: Complete the following steps:

1. Check the CMM or FSM event log for any fan or cooling related issues.
2. Make sure that the airflow at the front and rear of the chassis is not obstructed and that fillers are in place and correctly installed.
3. Make sure that the room temperature is within operating specifications.
4. Make sure that the DIMM baffles are in place.
5. If the problem persists and there are no other DIMMs with the same indication, replace the DIMM.

806f0a0c-200bffff An Over-Temperature Condition has been detected on the [PhysicalMemoryElementName] on Subsystem [MemoryElementName].

Explanation: This message is for the use case when an implementation has detected an Over Temperature Condition for Memory that has been Detected.

May also be shown as 806f0a0c200bffff or 0x806f0a0c200bffff

Severity: Error

Alert Category: Critical - Temperature

Serviceable: Yes

CIM Information: **Prefix:** PLAT and **ID:** 0146

SNMP Trap ID: 0

Automatically notify Support: No

User response: Complete the following steps:

1. Check the CMM or FSM event log for any fan or cooling related issues.
2. Make sure that the airflow at the front and rear of the chassis is not obstructed and that fillers are in place and correctly installed.
3. Make sure that the room temperature is within operating specifications.
4. Make sure that the DIMM baffles are in place.
5. If the problem persists and there are no other DIMMs with the same indication, replace the DIMM.

806f0a0c-200cffff An Over-Temperature Condition has been detected on the [PhysicalMemoryElementName] on Subsystem [MemoryElementName].

Explanation: This message is for the use case when an implementation has detected an Over Temperature Condition for Memory that has been Detected.

May also be shown as 806f0a0c200cffff or 0x806f0a0c200cffff

Severity: Error

Alert Category: Critical - Temperature

Serviceable: Yes

CIM Information: **Prefix:** PLAT and **ID:** 0146

SNMP Trap ID: 0

Automatically notify Support: No

User response: Complete the following steps:

1. Check the CMM or FSM event log for any fan or cooling related issues.
2. Make sure that the airflow at the front and rear of the chassis is not obstructed and that fillers are in place and correctly installed.
3. Make sure that the room temperature is within operating specifications.
4. Make sure that the DIMM baffles are in place.
5. If the problem persists and there are no other DIMMs with the same indication, replace the DIMM.

806f0a0c-200dffff An Over-Temperature Condition has been detected on the [PhysicalMemoryElementName] on Subsystem [MemoryElementName].

Explanation: This message is for the use case when an implementation has detected an Over Temperature Condition for Memory that has been Detected.

May also be shown as 806f0a0c200dffff or 0x806f0a0c200dffff

Severity: Error

Alert Category: Critical - Temperature

Serviceable: Yes

CIM Information: **Prefix:** PLAT and **ID:** 0146

SNMP Trap ID: 0

Automatically notify Support: No

User response: Complete the following steps:

1. Check the CMM or FSM event log for any fan or cooling related issues.
2. Make sure that the airflow at the front and rear of the chassis is not obstructed and that fillers are in place and correctly installed.
3. Make sure that the room temperature is within operating specifications.
4. Make sure that the DIMM baffles are in place.
5. If the problem persists and there are no other DIMMs with the same indication, replace the DIMM.

806f0a0c-200effff An Over-Temperature Condition has been detected on the [PhysicalMemoryElementName] on Subsystem [MemoryElementName].

Explanation: This message is for the use case when an implementation has detected an Over Temperature Condition for Memory that has been Detected.

May also be shown as 806f0a0c200effff or 0x806f0a0c200effff

Severity: Error

Alert Category: Critical - Temperature

Serviceable: Yes

CIM Information: **Prefix:** PLAT and **ID:** 0146

SNMP Trap ID: 0

Automatically notify Support: No

User response: Complete the following steps:

1. Check the CMM or FSM event log for any fan or cooling related issues.

2. Make sure that the airflow at the front and rear of the chassis is not obstructed and that fillers are in place and correctly installed.
3. Make sure that the room temperature is within operating specifications.
4. Make sure that the DIMM baffles are in place.
5. If the problem persists and there are no other DIMMs with the same indication, replace the DIMM.

806f0a0c-200fffff An Over-Temperature Condition has been detected on the [PhysicalMemoryElementName] on Subsystem [MemoryElementName].

Explanation: This message is for the use case when an implementation has detected an Over Temperature Condition for Memory that has been Detected.

May also be shown as 806f0a0c200fffff or 0x806f0a0c200fffff

Severity: Error

Alert Category: Critical - Temperature

Serviceable: Yes

CIM Information: **Prefix:** PLAT and **ID:** 0146

SNMP Trap ID: 0

Automatically notify Support: No

User response: Complete the following steps:

1. Check the CMM or FSM event log for any fan or cooling related issues.
2. Make sure that the airflow at the front and rear of the chassis is not obstructed and that fillers are in place and correctly installed.
3. Make sure that the room temperature is within operating specifications.
4. Make sure that the DIMM baffles are in place.
5. If the problem persists and there are no other DIMMs with the same indication, replace the DIMM.

806f0a0c-2010ffff An Over-Temperature Condition has been detected on the [PhysicalMemoryElementName] on Subsystem [MemoryElementName].

Explanation: This message is for the use case when an implementation has detected an Over Temperature Condition for Memory that has been Detected.

May also be shown as 806f0a0c2010ffff or 0x806f0a0c2010ffff

Severity: Error

Alert Category: Critical - Temperature

Serviceable: Yes

CIM Information: **Prefix:** PLAT and **ID:** 0146

SNMP Trap ID: 0

Automatically notify Support: No

User response: Complete the following steps:

1. Check the CMM or FSM event log for any fan or cooling related issues.
2. Make sure that the airflow at the front and rear of the chassis is not obstructed and that fillers are in place and correctly installed.
3. Make sure that the room temperature is within operating specifications.
4. Make sure that the DIMM baffles are in place.
5. If the problem persists and there are no other DIMMs with the same indication, replace the DIMM.

806f0a0c-2011ffff An Over-Temperature Condition has been detected on the [PhysicalMemoryElementName] on Subsystem [MemoryElementName].

Explanation: This message is for the use case when an implementation has detected an Over Temperature Condition for Memory that has been Detected.

May also be shown as 806f0a0c2011ffff or 0x806f0a0c2011ffff

Severity: Error

Alert Category: Critical - Temperature

Serviceable: Yes

CIM Information: **Prefix:** PLAT and **ID:** 0146

SNMP Trap ID: 0

Automatically notify Support: No

User response: Complete the following steps:

1. Check the CMM or FSM event log for any fan or cooling related issues.
2. Make sure that the airflow at the front and rear of the chassis is not obstructed and that fillers are in place and correctly installed.
3. Make sure that the room temperature is within operating specifications.
4. Make sure that the DIMM baffles are in place.
5. If the problem persists and there are no other DIMMs with the same indication, replace the DIMM.

806f0a0c-2012ffff An Over-Temperature Condition has been detected on the [PhysicalMemoryElementName] on Subsystem [MemoryElementName].

Explanation: This message is for the use case when an implementation has detected an Over Temperature Condition for Memory that has been Detected.

May also be shown as 806f0a0c2012ffff or 0x806f0a0c2012ffff

Severity: Error

Alert Category: Critical - Temperature

Serviceable: Yes

CIM Information: **Prefix:** PLAT and **ID:** 0146

SNMP Trap ID: 0

Automatically notify Support: No

User response: Complete the following steps:

1. Check the CMM or FSM event log for any fan or cooling related issues.
2. Make sure that the airflow at the front and rear of the chassis is not obstructed and that fillers are in place and correctly installed.
3. Make sure that the room temperature is within operating specifications.
4. Make sure that the DIMM baffles are in place.
5. If the problem persists and there are no other DIMMs with the same indication, replace the DIMM.

806f0a0c-2013ffff An Over-Temperature Condition has been detected on the [PhysicalMemoryElementName] on Subsystem [MemoryElementName].

Explanation: This message is for the use case when an implementation has detected an Over Temperature Condition for Memory that has been Detected.

May also be shown as 806f0a0c2013ffff or 0x806f0a0c2013ffff

Severity: Error

Alert Category: Critical - Temperature

Serviceable: Yes

CIM Information: **Prefix:** PLAT and **ID:** 0146

SNMP Trap ID: 0

Automatically notify Support: No

User response: Complete the following steps:

1. Check the CMM or FSM event log for any fan or cooling related issues.
2. Make sure that the airflow at the front and rear of the chassis is not obstructed and that fillers are in place and correctly installed.
3. Make sure that the room temperature is within operating specifications.
4. Make sure that the DIMM baffles are in place.
5. If the problem persists and there are no other DIMMs with the same indication, replace the DIMM.

806f0a0c-2014ffff An Over-Temperature Condition has been detected on the [PhysicalMemoryElementName] on Subsystem [MemoryElementName].

Explanation: This message is for the use case when an implementation has detected an Over Temperature Condition for Memory that has been Detected.

May also be shown as 806f0a0c2014ffff or 0x806f0a0c2014ffff

Severity: Error

Alert Category: Critical - Temperature

Serviceable: Yes

CIM Information: **Prefix:** PLAT and **ID:** 0146

SNMP Trap ID: 0

Automatically notify Support: No

User response: Complete the following steps:

1. Check the CMM or FSM event log for any fan or cooling related issues.
2. Make sure that the airflow at the front and rear of the chassis is not obstructed and that fillers are in place and correctly installed.
3. Make sure that the room temperature is within operating specifications.
4. Make sure that the DIMM baffles are in place.
5. If the problem persists and there are no other DIMMs with the same indication, replace the DIMM.

806f0a0c-2015ffff An Over-Temperature Condition has been detected on the [PhysicalMemoryElementName] on Subsystem [MemoryElementName].

Explanation: This message is for the use case when an implementation has detected an Over Temperature Condition for Memory that has been Detected.

May also be shown as 806f0a0c2015ffff or 0x806f0a0c2015ffff

Severity: Error

Alert Category: Critical - Temperature

Serviceable: Yes

CIM Information: **Prefix:** PLAT and **ID:** 0146

SNMP Trap ID: 0

Automatically notify Support: No

User response: Complete the following steps:

1. Check the CMM or FSM event log for any fan or cooling related issues.

2. Make sure that the airflow at the front and rear of the chassis is not obstructed and that fillers are in place and correctly installed.
3. Make sure that the room temperature is within operating specifications.
4. Make sure that the DIMM baffles are in place.
5. If the problem persists and there are no other DIMMs with the same indication, replace the DIMM.

806f0a0c-2016ffff An Over-Temperature Condition has been detected on the [PhysicalMemoryElementName] on Subsystem [MemoryElementName].

Explanation: This message is for the use case when an implementation has detected an Over Temperature Condition for Memory that has been Detected.

May also be shown as 806f0a0c2016ffff or 0x806f0a0c2016ffff

Severity: Error

Alert Category: Critical - Temperature

Serviceable: Yes

CIM Information: **Prefix:** PLAT and **ID:** 0146

SNMP Trap ID: 0

Automatically notify Support: No

User response: Complete the following steps:

1. Check the CMM or FSM event log for any fan or cooling related issues.
2. Make sure that the airflow at the front and rear of the chassis is not obstructed and that fillers are in place and correctly installed.
3. Make sure that the room temperature is within operating specifications.
4. Make sure that the DIMM baffles are in place.
5. If the problem persists and there are no other DIMMs with the same indication, replace the DIMM.

806f0a0c-2017ffff An Over-Temperature Condition has been detected on the [PhysicalMemoryElementName] on Subsystem [MemoryElementName].

Explanation: This message is for the use case when an implementation has detected an Over Temperature Condition for Memory that has been Detected.

May also be shown as 806f0a0c2017ffff or 0x806f0a0c2017ffff

Severity: Error

Alert Category: Critical - Temperature

Serviceable: Yes

CIM Information: **Prefix:** PLAT and **ID:** 0146

SNMP Trap ID: 0

Automatically notify Support: No

User response: Complete the following steps:

1. Check the CMM or FSM event log for any fan or cooling related issues.
2. Make sure that the airflow at the front and rear of the chassis is not obstructed and that fillers are in place and correctly installed.
3. Make sure that the room temperature is within operating specifications.
4. Make sure that the DIMM baffles are in place.
5. If the problem persists and there are no other DIMMs with the same indication, replace the DIMM.

806f0a0c-2018ffff An Over-Temperature Condition has been detected on the [PhysicalMemoryElementName] on Subsystem [MemoryElementName].

Explanation: This message is for the use case when an implementation has detected an Over Temperature Condition for Memory that has been Detected.

May also be shown as 806f0a0c2018ffff or 0x806f0a0c2018ffff

Severity: Error

Alert Category: Critical - Temperature

Serviceable: Yes

CIM Information: **Prefix:** PLAT and **ID:** 0146

SNMP Trap ID: 0

Automatically notify Support: No

User response: Complete the following steps:

1. Check the CMM or FSM event log for any fan or cooling related issues.
2. Make sure that the airflow at the front and rear of the chassis is not obstructed and that fillers are in place and correctly installed.
3. Make sure that the room temperature is within operating specifications.
4. Make sure that the DIMM baffles are in place.
5. If the problem persists and there are no other DIMMs with the same indication, replace the DIMM.

806f0a0c-2019ffff An Over-Temperature Condition has been detected on the [PhysicalMemoryElementName] on Subsystem [MemoryElementName].

Explanation: This message is for the use case when an implementation has detected an Over Temperature Condition for Memory that has been Detected.

May also be shown as 806f0a0c2019ffff or 0x806f0a0c2019ffff

Severity: Error

Alert Category: Critical - Temperature

Serviceable: Yes

CIM Information: **Prefix:** PLAT and **ID:** 0146

SNMP Trap ID: 0

Automatically notify Support: No

User response: Complete the following steps:

1. Check the CMM or FSM event log for any fan or cooling related issues.
2. Make sure that the airflow at the front and rear of the chassis is not obstructed and that fillers are in place and correctly installed.
3. Make sure that the room temperature is within operating specifications.
4. Make sure that the DIMM baffles are in place.
5. If the problem persists and there are no other DIMMs with the same indication, replace the DIMM.

806f0a0c-201affff An Over-Temperature Condition has been detected on the [PhysicalMemoryElementName] on Subsystem [MemoryElementName].

Explanation: This message is for the use case when an implementation has detected an Over Temperature Condition for Memory that has been Detected.

May also be shown as 806f0a0c201affff or 0x806f0a0c201affff

Severity: Error

Alert Category: Critical - Temperature

Serviceable: Yes

CIM Information: **Prefix:** PLAT and **ID:** 0146

SNMP Trap ID: 0

Automatically notify Support: No

User response: Complete the following steps:

1. Check the CMM or FSM event log for any fan or cooling related issues.
2. Make sure that the airflow at the front and rear of the chassis is not obstructed and that fillers are in place and correctly installed.
3. Make sure that the room temperature is within operating specifications.
4. Make sure that the DIMM baffles are in place.
5. If the problem persists and there are no other DIMMs with the same indication, replace the DIMM.

806f0a0c-201bffff An Over-Temperature Condition has been detected on the [PhysicalMemoryElementName] on Subsystem [MemoryElementName].

Explanation: This message is for the use case when an implementation has detected an Over Temperature Condition for Memory that has been Detected.

May also be shown as 806f0a0c201bffff or 0x806f0a0c201bffff

Severity: Error

Alert Category: Critical - Temperature

Serviceable: Yes

CIM Information: **Prefix:** PLAT and **ID:** 0146

SNMP Trap ID: 0

Automatically notify Support: No

User response: Complete the following steps:

1. Check the CMM or FSM event log for any fan or cooling related issues.
2. Make sure that the airflow at the front and rear of the chassis is not obstructed and that fillers are in place and correctly installed.
3. Make sure that the room temperature is within operating specifications.
4. Make sure that the DIMM baffles are in place.
5. If the problem persists and there are no other DIMMs with the same indication, replace the DIMM.

806f0a0c-201cffff An Over-Temperature Condition has been detected on the [PhysicalMemoryElementName] on Subsystem [MemoryElementName].

Explanation: This message is for the use case when an implementation has detected an Over Temperature Condition for Memory that has been Detected.

May also be shown as 806f0a0c201cffff or 0x806f0a0c201cffff

Severity: Error

Alert Category: Critical - Temperature

Serviceable: Yes

CIM Information: **Prefix:** PLAT and **ID:** 0146

SNMP Trap ID: 0

Automatically notify Support: No

User response: Complete the following steps:

1. Check the CMM or FSM event log for any fan or cooling related issues.

2. Make sure that the airflow at the front and rear of the chassis is not obstructed and that fillers are in place and correctly installed.
3. Make sure that the room temperature is within operating specifications.
4. Make sure that the DIMM baffles are in place.
5. If the problem persists and there are no other DIMMs with the same indication, replace the DIMM.

806f0a0c-201dffff An Over-Temperature Condition has been detected on the [PhysicalMemoryElementName] on Subsystem [MemoryElementName].

Explanation: This message is for the use case when an implementation has detected an Over Temperature Condition for Memory that has been Detected.

May also be shown as 806f0a0c201dffff or 0x806f0a0c201dffff

Severity: Error

Alert Category: Critical - Temperature

Serviceable: Yes

CIM Information: **Prefix:** PLAT and **ID:** 0146

SNMP Trap ID: 0

Automatically notify Support: No

User response: Complete the following steps:

1. Check the CMM or FSM event log for any fan or cooling related issues.
2. Make sure that the airflow at the front and rear of the chassis is not obstructed and that fillers are in place and correctly installed.
3. Make sure that the room temperature is within operating specifications.
4. Make sure that the DIMM baffles are in place.
5. If the problem persists and there are no other DIMMs with the same indication, replace the DIMM.

806f0a0c-201effff An Over-Temperature Condition has been detected on the [PhysicalMemoryElementName] on Subsystem [MemoryElementName].

Explanation: This message is for the use case when an implementation has detected an Over Temperature Condition for Memory that has been Detected.

May also be shown as 806f0a0c201effff or 0x806f0a0c201effff

Severity: Error

Alert Category: Critical - Temperature

Serviceable: Yes

CIM Information: **Prefix:** PLAT and **ID:** 0146

SNMP Trap ID: 0

Automatically notify Support: No

User response: Complete the following steps:

1. Check the CMM or FSM event log for any fan or cooling related issues.
2. Make sure that the airflow at the front and rear of the chassis is not obstructed and that fillers are in place and correctly installed.
3. Make sure that the room temperature is within operating specifications.
4. Make sure that the DIMM baffles are in place.
5. If the problem persists and there are no other DIMMs with the same indication, replace the DIMM.

806f0a0c-201fffff An Over-Temperature Condition has been detected on the [PhysicalMemoryElementName] on Subsystem [MemoryElementName].

Explanation: This message is for the use case when an implementation has detected an Over Temperature Condition for Memory that has been Detected.

May also be shown as 806f0a0c201fffff or 0x806f0a0c201fffff

Severity: Error

Alert Category: Critical - Temperature

Serviceable: Yes

CIM Information: **Prefix:** PLAT and **ID:** 0146

SNMP Trap ID: 0

Automatically notify Support: No

User response: Complete the following steps:

1. Check the CMM or FSM event log for any fan or cooling related issues.
2. Make sure that the airflow at the front and rear of the chassis is not obstructed and that fillers are in place and correctly installed.
3. Make sure that the room temperature is within operating specifications.
4. Make sure that the DIMM baffles are in place.
5. If the problem persists and there are no other DIMMs with the same indication, replace the DIMM.

806f0a0c-2020ffff An Over-Temperature Condition has been detected on the [PhysicalMemoryElementName] on Subsystem [MemoryElementName].

Explanation: This message is for the use case when an implementation has detected an Over Temperature Condition for Memory that has been Detected.

May also be shown as 806f0a0c2020ffff or 0x806f0a0c2020ffff

Severity: Error

Alert Category: Critical - Temperature

Serviceable: Yes

CIM Information: **Prefix:** PLAT and **ID:** 0146

SNMP Trap ID: 0

Automatically notify Support: No

User response: Complete the following steps:

1. Check the CMM or FSM event log for any fan or cooling related issues.
2. Make sure that the airflow at the front and rear of the chassis is not obstructed and that fillers are in place and correctly installed.
3. Make sure that the room temperature is within operating specifications.
4. Make sure that the DIMM baffles are in place.
5. If the problem persists and there are no other DIMMs with the same indication, replace the DIMM.

806f0a0c-2021ffff An Over-Temperature Condition has been detected on the [PhysicalMemoryElementName] on Subsystem [MemoryElementName].

Explanation: This message is for the use case when an implementation has detected an Over Temperature Condition for Memory that has been Detected.

May also be shown as 806f0a0c2021ffff or 0x806f0a0c2021ffff

Severity: Error

Alert Category: Critical - Temperature

Serviceable: Yes

CIM Information: **Prefix:** PLAT and **ID:** 0146

SNMP Trap ID: 0

Automatically notify Support: No

User response: Complete the following steps:

1. Check the CMM or FSM event log for any fan or cooling related issues.
2. Make sure that the airflow at the front and rear of the chassis is not obstructed and that fillers are in place and correctly installed.
3. Make sure that the room temperature is within operating specifications.
4. Make sure that the DIMM baffles are in place.
5. If the problem persists and there are no other DIMMs with the same indication, replace the DIMM.

806f0a0c-2022ffff An Over-Temperature Condition has been detected on the [PhysicalMemoryElementName] on Subsystem [MemoryElementName].

Explanation: This message is for the use case when an implementation has detected an Over Temperature Condition for Memory that has been Detected.

May also be shown as 806f0a0c2022ffff or 0x806f0a0c2022ffff

Severity: Error

Alert Category: Critical - Temperature

Serviceable: Yes

CIM Information: **Prefix:** PLAT and **ID:** 0146

SNMP Trap ID: 0

Automatically notify Support: No

User response: Complete the following steps:

1. Check the CMM or FSM event log for any fan or cooling related issues.
2. Make sure that the airflow at the front and rear of the chassis is not obstructed and that fillers are in place and correctly installed.
3. Make sure that the room temperature is within operating specifications.
4. Make sure that the DIMM baffles are in place.
5. If the problem persists and there are no other DIMMs with the same indication, replace the DIMM.

806f0a0c-2023ffff An Over-Temperature Condition has been detected on the [PhysicalMemoryElementName] on Subsystem [MemoryElementName].

Explanation: This message is for the use case when an implementation has detected an Over Temperature Condition for Memory that has been Detected.

May also be shown as 806f0a0c2023ffff or 0x806f0a0c2023ffff

Severity: Error

Alert Category: Critical - Temperature

Serviceable: Yes

CIM Information: **Prefix:** PLAT and **ID:** 0146

SNMP Trap ID: 0

Automatically notify Support: No

User response: Complete the following steps:

1. Check the CMM or FSM event log for any fan or cooling related issues.

2. Make sure that the airflow at the front and rear of the chassis is not obstructed and that fillers are in place and correctly installed.
3. Make sure that the room temperature is within operating specifications.
4. Make sure that the DIMM baffles are in place.
5. If the problem persists and there are no other DIMMs with the same indication, replace the DIMM.

806f0a0c-2024ffff An Over-Temperature Condition has been detected on the [PhysicalMemoryElementName] on Subsystem [MemoryElementName].

Explanation: This message is for the use case when an implementation has detected an Over Temperature Condition for Memory that has been Detected.

May also be shown as 806f0a0c2024ffff or 0x806f0a0c2024ffff

Severity: Error

Alert Category: Critical - Temperature

Serviceable: Yes

CIM Information: **Prefix:** PLAT and **ID:** 0146

SNMP Trap ID: 0

Automatically notify Support: No

User response: Complete the following steps:

1. Check the CMM or FSM event log for any fan or cooling related issues.
2. Make sure that the airflow at the front and rear of the chassis is not obstructed and that fillers are in place and correctly installed.
3. Make sure that the room temperature is within operating specifications.
4. Make sure that the DIMM baffles are in place.
5. If the problem persists and there are no other DIMMs with the same indication, replace the DIMM.

806f0a0c-2025ffff An Over-Temperature Condition has been detected on the [PhysicalMemoryElementName] on Subsystem [MemoryElementName].

Explanation: This message is for the use case when an implementation has detected an Over Temperature Condition for Memory that has been Detected.

May also be shown as 806f0a0c2025ffff or 0x806f0a0c2025ffff

Severity: Error

Alert Category: Critical - Temperature

Serviceable: Yes

CIM Information: **Prefix:** PLAT and **ID:** 0146

SNMP Trap ID: 0

Automatically notify Support: No

User response: Complete the following steps:

1. Check the CMM or FSM event log for any fan or cooling related issues.
2. Make sure that the airflow at the front and rear of the chassis is not obstructed and that fillers are in place and correctly installed.
3. Make sure that the room temperature is within operating specifications.
4. Make sure that the DIMM baffles are in place.
5. If the problem persists and there are no other DIMMs with the same indication, replace the DIMM.

806f0a0c-2026ffff An Over-Temperature Condition has been detected on the [PhysicalMemoryElementName] on Subsystem [MemoryElementName].

Explanation: This message is for the use case when an implementation has detected an Over Temperature Condition for Memory that has been Detected.

May also be shown as 806f0a0c2026ffff or 0x806f0a0c2026ffff

Severity: Error

Alert Category: Critical - Temperature

Serviceable: Yes

CIM Information: **Prefix:** PLAT and **ID:** 0146

SNMP Trap ID: 0

Automatically notify Support: No

User response: Complete the following steps:

1. Check the CMM or FSM event log for any fan or cooling related issues.
2. Make sure that the airflow at the front and rear of the chassis is not obstructed and that fillers are in place and correctly installed.
3. Make sure that the room temperature is within operating specifications.
4. Make sure that the DIMM baffles are in place.
5. If the problem persists and there are no other DIMMs with the same indication, replace the DIMM.

806f0a0c-2027ffff An Over-Temperature Condition has been detected on the [PhysicalMemoryElementName] on Subsystem [MemoryElementName].

Explanation: This message is for the use case when an implementation has detected an Over Temperature Condition for Memory that has been Detected.

May also be shown as 806f0a0c2027ffff or 0x806f0a0c2027ffff

Severity: Error

Alert Category: Critical - Temperature

Serviceable: Yes

CIM Information: **Prefix:** PLAT and **ID:** 0146

SNMP Trap ID: 0

Automatically notify Support: No

User response: Complete the following steps:

1. Check the CMM or FSM event log for any fan or cooling related issues.
2. Make sure that the airflow at the front and rear of the chassis is not obstructed and that fillers are in place and correctly installed.
3. Make sure that the room temperature is within operating specifications.
4. Make sure that the DIMM baffles are in place.
5. If the problem persists and there are no other DIMMs with the same indication, replace the DIMM.

806f0a0c-2028ffff An Over-Temperature Condition has been detected on the [PhysicalMemoryElementName] on Subsystem [MemoryElementName].

Explanation: This message is for the use case when an implementation has detected an Over Temperature Condition for Memory that has been Detected.

May also be shown as 806f0a0c2028ffff or 0x806f0a0c2028ffff

Severity: Error

Alert Category: Critical - Temperature

Serviceable: Yes

CIM Information: **Prefix:** PLAT and **ID:** 0146

SNMP Trap ID: 0

Automatically notify Support: No

User response: Complete the following steps:

1. Check the CMM or FSM event log for any fan or cooling related issues.
2. Make sure that the airflow at the front and rear of the chassis is not obstructed and that fillers are in place and correctly installed.
3. Make sure that the room temperature is within operating specifications.
4. Make sure that the DIMM baffles are in place.
5. If the problem persists and there are no other DIMMs with the same indication, replace the DIMM.

806f0a0c-2029ffff An Over-Temperature Condition has been detected on the [PhysicalMemoryElementName] on Subsystem [MemoryElementName].

Explanation: This message is for the use case when an implementation has detected an Over Temperature Condition for Memory that has been Detected.

May also be shown as 806f0a0c2029ffff or 0x806f0a0c2029ffff

Severity: Error

Alert Category: Critical - Temperature

Serviceable: Yes

CIM Information: **Prefix:** PLAT and **ID:** 0146

SNMP Trap ID: 0

Automatically notify Support: No

User response: Complete the following steps:

1. Check the CMM or FSM event log for any fan or cooling related issues.
2. Make sure that the airflow at the front and rear of the chassis is not obstructed and that fillers are in place and correctly installed.
3. Make sure that the room temperature is within operating specifications.
4. Make sure that the DIMM baffles are in place.
5. If the problem persists and there are no other DIMMs with the same indication, replace the DIMM.

806f0a0c-202affff An Over-Temperature Condition has been detected on the [PhysicalMemoryElementName] on Subsystem [MemoryElementName].

Explanation: This message is for the use case when an implementation has detected an Over Temperature Condition for Memory that has been Detected.

May also be shown as 806f0a0c202affff or 0x806f0a0c202affff

Severity: Error

Alert Category: Critical - Temperature

Serviceable: Yes

CIM Information: **Prefix:** PLAT and **ID:** 0146

SNMP Trap ID: 0

Automatically notify Support: No

User response: Complete the following steps:

1. Check the CMM or FSM event log for any fan or cooling related issues.

2. Make sure that the airflow at the front and rear of the chassis is not obstructed and that fillers are in place and correctly installed.
3. Make sure that the room temperature is within operating specifications.
4. Make sure that the DIMM baffles are in place.
5. If the problem persists and there are no other DIMMs with the same indication, replace the DIMM.

806f0a0c-202bffff An Over-Temperature Condition has been detected on the [PhysicalMemoryElementName] on Subsystem [MemoryElementName].

Explanation: This message is for the use case when an implementation has detected an Over Temperature Condition for Memory that has been Detected.

May also be shown as 806f0a0c202bffff or 0x806f0a0c202bffff

Severity: Error

Alert Category: Critical - Temperature

Serviceable: Yes

CIM Information: **Prefix:** PLAT and **ID:** 0146

SNMP Trap ID: 0

Automatically notify Support: No

User response: Complete the following steps:

1. Check the CMM or FSM event log for any fan or cooling related issues.
2. Make sure that the airflow at the front and rear of the chassis is not obstructed and that fillers are in place and correctly installed.
3. Make sure that the room temperature is within operating specifications.
4. Make sure that the DIMM baffles are in place.
5. If the problem persists and there are no other DIMMs with the same indication, replace the DIMM.

806f0a0c-202cffff An Over-Temperature Condition has been detected on the [PhysicalMemoryElementName] on Subsystem [MemoryElementName].

Explanation: This message is for the use case when an implementation has detected an Over Temperature Condition for Memory that has been Detected.

May also be shown as 806f0a0c202cffff or 0x806f0a0c202cffff

Severity: Error

Alert Category: Critical - Temperature

Serviceable: Yes

CIM Information: **Prefix:** PLAT and **ID:** 0146

SNMP Trap ID: 0

Automatically notify Support: No

User response: Complete the following steps:

1. Check the CMM or FSM event log for any fan or cooling related issues.
2. Make sure that the airflow at the front and rear of the chassis is not obstructed and that fillers are in place and correctly installed.
3. Make sure that the room temperature is within operating specifications.
4. Make sure that the DIMM baffles are in place.
5. If the problem persists and there are no other DIMMs with the same indication, replace the DIMM.

806f0a0c-202dffff An Over-Temperature Condition has been detected on the [PhysicalMemoryElementName] on Subsystem [MemoryElementName].

Explanation: This message is for the use case when an implementation has detected an Over Temperature Condition for Memory that has been Detected.

May also be shown as 806f0a0c202dffff or 0x806f0a0c202dffff

Severity: Error

Alert Category: Critical - Temperature

Serviceable: Yes

CIM Information: **Prefix:** PLAT and **ID:** 0146

SNMP Trap ID: 0

Automatically notify Support: No

User response: Complete the following steps:

1. Check the CMM or FSM event log for any fan or cooling related issues.
2. Make sure that the airflow at the front and rear of the chassis is not obstructed and that fillers are in place and correctly installed.
3. Make sure that the room temperature is within operating specifications.
4. Make sure that the DIMM baffles are in place.
5. If the problem persists and there are no other DIMMs with the same indication, replace the DIMM.

806f0a0c-202effff An Over-Temperature Condition has been detected on the [PhysicalMemoryElementName] on Subsystem [MemoryElementName].

Explanation: This message is for the use case when an implementation has detected an Over Temperature Condition for Memory that has been Detected.

May also be shown as 806f0a0c202effff or 0x806f0a0c202effff

Severity: Error

Alert Category: Critical - Temperature

Serviceable: Yes

CIM Information: **Prefix:** PLAT and **ID:** 0146

SNMP Trap ID: 0

Automatically notify Support: No

User response: Complete the following steps:

1. Check the CMM or FSM event log for any fan or cooling related issues.
2. Make sure that the airflow at the front and rear of the chassis is not obstructed and that fillers are in place and correctly installed.
3. Make sure that the room temperature is within operating specifications.
4. Make sure that the DIMM baffles are in place.
5. If the problem persists and there are no other DIMMs with the same indication, replace the DIMM.

806f0a0c-202fffff An Over-Temperature Condition has been detected on the [PhysicalMemoryElementName] on Subsystem [MemoryElementName].

Explanation: This message is for the use case when an implementation has detected an Over Temperature Condition for Memory that has been Detected.

May also be shown as 806f0a0c202fffff or 0x806f0a0c202fffff

Severity: Error

Alert Category: Critical - Temperature

Serviceable: Yes

CIM Information: **Prefix:** PLAT and **ID:** 0146

SNMP Trap ID: 0

Automatically notify Support: No

User response: Complete the following steps:

1. Check the CMM or FSM event log for any fan or cooling related issues.
2. Make sure that the airflow at the front and rear of the chassis is not obstructed and that fillers are in place and correctly installed.
3. Make sure that the room temperature is within operating specifications.
4. Make sure that the DIMM baffles are in place.
5. If the problem persists and there are no other DIMMs with the same indication, replace the DIMM.

806f0a0c-2030ffff An Over-Temperature Condition has been detected on the [PhysicalMemoryElementName] on Subsystem [MemoryElementName].

Explanation: This message is for the use case when an implementation has detected an Over Temperature Condition for Memory that has been Detected.

May also be shown as 806f0a0c2030ffff or 0x806f0a0c2030ffff

Severity: Error

Alert Category: Critical - Temperature

Serviceable: Yes

CIM Information: **Prefix:** PLAT and **ID:** 0146

SNMP Trap ID: 0

Automatically notify Support: No

User response: Complete the following steps:

1. Check the CMM or FSM event log for any fan or cooling related issues.
2. Make sure that the airflow at the front and rear of the chassis is not obstructed and that fillers are in place and correctly installed.
3. Make sure that the room temperature is within operating specifications.
4. Make sure that the DIMM baffles are in place.
5. If the problem persists and there are no other DIMMs with the same indication, replace the DIMM.

806f0a0c-2581ffff An Over-Temperature Condition has been detected on the [PhysicalMemoryElementName] on Subsystem [MemoryElementName].

Explanation: This message is for the use case when an implementation has detected an Over Temperature Condition for Memory that has been Detected. All DIMMs. One of the DIMMs.

May also be shown as 806f0a0c2581ffff or 0x806f0a0c2581ffff

Severity: Error

Alert Category: Critical - Temperature

Serviceable: Yes

CIM Information: **Prefix:** PLAT and **ID:** 0146

SNMP Trap ID: 0

Automatically notify Support: No

User response: Complete the following steps:

1. Check the CMM or FSM event log for any fan or cooling related issues.

2. Make sure that the airflow at the front and rear of the chassis is not obstructed and that fillers are in place and correctly installed.
3. Make sure that the room temperature is within operating specifications.
4. Make sure that the DIMM baffles are in place.
5. If the problem persists and there are no other DIMMs with the same indication, replace the DIMM.

806f0a13-2401ffff A Fatal Bus Error has occurred on bus [SensorElementName].

Explanation: IMM has detected a Bus Fatal Error relating to SMBus.

May also be shown as 806f0a132401ffff or 0x806f0a132401ffff

Severity: Error

Alert Category: Critical - Other

Serviceable: Yes

CIM Information: **Prefix:** PLAT and **ID:** 0244

SNMP Trap ID: 50

Automatically notify Support: No

User response: This is a UEFI detected event. The UEFI diagnostic code for this event can be found in the logged IMM message text. Please refer to the UEFI diagnostic code in the "UEFI diagnostic code" section of the Information Center for the appropriate user response.

806f0a13-2582ffff A Fatal Bus Error has occurred on bus [SensorElementName].

Explanation: IMM has detected a Bus Fatal Error relating to PCI.

May also be shown as 806f0a132582ffff or 0x806f0a132582ffff

Severity: Error

Alert Category: Critical - Other

Serviceable: Yes

CIM Information: **Prefix:** PLAT and **ID:** 0244

SNMP Trap ID: 50

Automatically notify Support: No

User response: This is a UEFI detected event. The UEFI diagnostic code for this event can be found in the logged IMM message text. Please refer to the UEFI diagnostic code in the "UEFI diagnostic code" section of the Information Center for the appropriate user response.

806f0b13-0701ffff Bus [SensorElementName] is operating in a degraded state.

Explanation: IMM has detected that the DMI Bus is degraded.

May also be shown as 806f0b130701ffff or 0x806f0b130701ffff

Severity: Warning

Alert Category: Warning - Other

Serviceable: Yes

CIM Information: **Prefix:** PLAT and **ID:** 0246

SNMP Trap ID: 60

Automatically notify Support: No

User response: Complete the following steps:

1. AC cycle the machine

2. Remove CPU 1 and inspect the CPU socket for bent pins.
3. Swap CPU 1 and CPU 2. If the error goes away, replace the original CPU 1.
4. If the problem persists, System board may need to be replaced.(Trained service personnel only)

81010202-0701ffff Numeric sensor [NumericSensorElementName] going low (lower critical) has deasserted.

Explanation: This message is for the use case when an implementation has detected a Lower Critical sensor going low has deasserted. A previously low voltage has returned to above its specified threshold (sensor Planar 12V, Planar 3.3V, or Planar 5V).

May also be shown as 810102020701ffff or 0x810102020701ffff

Severity: Info

Alert Category: Critical - Voltage

Serviceable: No

CIM Information: **Prefix:** PLAT and **ID:** 0481

SNMP Trap ID: 1

Automatically notify Support: No

User response: Information only; no action is required.

81010202-2801ffff Numeric sensor [NumericSensorElementName] going low (lower critical) has deasserted.

Explanation: The previously low CMOS battery voltage has returned to above its specified threshold.

May also be shown as 810102022801ffff or 0x810102022801ffff

Severity: Info

Alert Category: Critical - Voltage

Serviceable: No

CIM Information: **Prefix:** PLAT and **ID:** 0481

SNMP Trap ID: 1

Automatically notify Support: No

User response: Information only; no action is required.

81010902-0701ffff Numeric sensor [NumericSensorElementName] going high (upper critical) has deasserted.

Explanation: A previously high voltage has returned to below its specified threshold (sensor Planar 12V, Planar 3.3V, or Planar 5V).

May also be shown as 810109020701ffff or 0x810109020701ffff

Severity: Info

Alert Category: Critical - Voltage

Serviceable: No

CIM Information: **Prefix:** PLAT and **ID:** 0495

SNMP Trap ID: 1

Automatically notify Support: No

User response: Information only; no action is required.

81010b01-3701ffff Numeric sensor [NumericSensorElementName] going high (upper non-recoverable) has deasserted.

Explanation: The previously high inlet temperature 1 has returned to below its specified threshold.

May also be shown as 81010b013701ffff or 0x81010b013701ffff

Severity: Info

Alert Category: Critical - Temperature

Serviceable: No

CIM Information: **Prefix:** PLAT and **ID:** 0499

SNMP Trap ID: 0

Automatically notify Support: No

User response: Information only; no action is required.

81010b01-3702ffff Numeric sensor [NumericSensorElementName] going high (upper non-recoverable) has deasserted.

Explanation: The previously high inlet temperature 2 has returned to below its specified threshold.

May also be shown as 81010b013702ffff or 0x81010b013702ffff

Severity: Info

Alert Category: Critical - Temperature

Serviceable: No

CIM Information: **Prefix:** PLAT and **ID:** 0499

SNMP Trap ID: 0

Automatically notify Support: No

User response: Information only; no action is required.

81030006-2101ffff Sensor Sig Verify Fail has asserted.

Explanation: Signature verification of one of the Firmware Volumes or Capsules in UEFI BIOS failed.

May also be shown as 810300062101ffff or 0x810300062101ffff

Severity: Info

Alert Category: System - Other

Serviceable: No

CIM Information: **Prefix:** PLAT and **ID:** 0508

SNMP Trap ID:

Automatically notify Support: No

User response: Automatic BIOS Recovery (ABR) should cause system to come up from UEFI image in backup bank. Reflash UEFI image in the primary bank. If error does not persist no additional recovery action is required.

8103010e-2581ffff Sensor Memory Resized has deasserted.

Explanation: This message is for the use case when an implementation has detected a Sensor has deasserted.

May also be shown as 8103010e2581ffff or 0x8103010e2581ffff

Severity: Info

Alert Category: System - Other

Serviceable: No

CIM Information: **Prefix:** PLAT and **ID:** 0509

SNMP Trap ID:

Automatically notify Support: No

User response: This is a UEFI detected event. The UEFI diagnostic code for this event can be found in the logged IMM message text. Please refer to the UEFI diagnostic code in the "UEFI diagnostic code" section of the Information Center for the appropriate user response.

81070101-0301ffff Sensor CPU 1 Overtemp has deasserted the transition from normal to non-critical state.

Explanation: The previously high microprocessor 1 temperature has returned to below its specified threshold.

May also be shown as 810701010301ffff or 0x810701010301ffff

Severity: Info

Alert Category: Warning - Temperature

Serviceable: No

CIM Information: **Prefix:** PLAT and **ID:** 0521

SNMP Trap ID: 12

Automatically notify Support: No

User response: Information only; no action is required.

81070101-0302ffff Sensor CPU 2 Overtemp has deasserted the transition from normal to non-critical state.

Explanation: The previously high microprocessor 2 temperature has returned to below its specified threshold.

May also be shown as 810701010302ffff or 0x810701010302ffff

Severity: Info

Alert Category: Warning - Temperature

Serviceable: No

CIM Information: **Prefix:** PLAT and **ID:** 0521

SNMP Trap ID: 12

Automatically notify Support: No

User response: Information only; no action is required.

81070101-0303ffff Sensor CPU 3 Overtemp has deasserted the transition from normal to non-critical state.

Explanation: The previously high microprocessor 3 temperature has returned to below its specified threshold.

May also be shown as 810701010303ffff or 0x810701010303ffff

Severity: Info

Alert Category: Warning - Temperature

Serviceable: No

CIM Information: **Prefix:** PLAT and **ID:** 0521

SNMP Trap ID: 12

Automatically notify Support: No

User response: Information only; no action is required.

81070101-0304ffff Sensor CPU 4 Overtemp has deasserted the transition from normal to non-critical state.

Explanation: The previously high microprocessor 4 temperature has returned to below its specified threshold.

May also be shown as 810701010304ffff or 0x810701010304ffff

Severity: Info

Alert Category: Warning - Temperature

Serviceable: No

CIM Information: **Prefix:** PLAT and **ID:** 0521

SNMP Trap ID: 12

Automatically notify Support: No

User response: Information only; no action is required.

81070101-2c01ffff Sensor Mezz Exp 1 temp has deasserted the transition from normal to non-critical state.

Explanation: The previously high I/O Exansion card temperature has returned to below its specified threshold.

May also be shown as 810701012c01ffff or 0x810701012c01ffff

Severity: Info

Alert Category: Warning - Temperature

Serviceable: No

CIM Information: **Prefix:** PLAT and **ID:** 0521

SNMP Trap ID: 12

Automatically notify Support: No

User response: Information only; no action is required.

81070101-2c02ffff Sensor Mezz Exp 2 temp has deasserted the transition from normal to non-critical state.

Explanation: The previously high I/O Exansion card temperature has returned to below its specified threshold.

May also be shown as 810701012c02ffff or 0x810701012c02ffff

Severity: Info

Alert Category: Warning - Temperature

Serviceable: No

CIM Information: **Prefix:** PLAT and **ID:** 0521

SNMP Trap ID: 12

Automatically notify Support: No

User response: Information only; no action is required.

81070101-2c03ffff Sensor Mezz Exp 3 temp has deasserted the transition from normal to non-critical state.

Explanation: The previously high I/O Exansion card temperature has returned to below its specified threshold.

May also be shown as 810701012c03ffff or 0x810701012c03ffff

Severity: Info

Alert Category: Warning - Temperature

Serviceable: No

CIM Information: **Prefix:** PLAT and **ID:** 0521

SNMP Trap ID: 12

Automatically notify Support: No

User response: Information only; no action is required.

81070101-2c04ffff Sensor Mezz Exp 4 temp has deasserted the transition from normal to non-critical state.

Explanation: The previously high I/O Exansion card temperature has returned to below its specified threshold.

May also be shown as 810701012c04ffff or 0x810701012c04ffff

Severity: Info

Alert Category: Warning - Temperature

Serviceable: No

CIM Information: **Prefix:** PLAT and **ID:** 0521

SNMP Trap ID: 12

Automatically notify Support: No

User response: Information only; no action is required.

81070101-2d01ffff Sensor PCH Overtemp has deasserted the transition from normal to non-critical state.

Explanation: IMM has detected that the PCH temperature has returned to a normal range.

May also be shown as 810701012d01ffff or 0x810701012d01ffff

Severity: Info

Alert Category: Warning - Temperature

Serviceable: No

CIM Information: **Prefix:** PLAT and **ID:** 0521

SNMP Trap ID: 12

Automatically notify Support: No

User response: Information only; no action is required.

81070101-3701ffff Sensor Inlet 1 Overtemp has deasserted the transition from normal to non-critical state.

Explanation: This message is for the use case when an implementation has detected that the Inlet 1 temperature has deasserted a transition to non-critical from normal.

May also be shown as 810701013701ffff or 0x810701013701ffff

Severity: Info

Alert Category: Warning - Temperature

Serviceable: No

CIM Information: **Prefix:** PLAT and **ID:** 0521

SNMP Trap ID: 12

Automatically notify Support: No

User response: Information only; no action is required.

81070101-3702ffff Sensor Inlet 2 Overtemp has deasserted the transition from normal to non-critical state.

Explanation: This message is for the use case when an implementation has detected the Inlet 2 temperature has deasserted a transition to non-critical from normal.

May also be shown as 810701013702ffff or 0x810701013702ffff

Severity: Info

Alert Category: Warning - Temperature

Serviceable: No

CIM Information: **Prefix:** PLAT and **ID:** 0521

SNMP Trap ID: 12

Automatically notify Support: No

User response: Information only; no action is required.

81070114-2201ffff Sensor TPM Lock has deasserted the transition from normal to non-critical state.

Explanation: The TPM Lock has returned to normal.

May also be shown as 810701142201ffff or 0x810701142201ffff

Severity: Info

Alert Category: Warning - Other

Serviceable: No

CIM Information: **Prefix:** PLAT and **ID:** 0521

SNMP Trap ID: 60

Automatically notify Support: No

User response: Information only; no action required.

81070202-0701ffff Sensor Planar Fault has transitioned to a less severe state from critical.

Explanation: The Planar Fault sensor no longer detects a problem with the system board.

May also be shown as 810702020701ffff or 0x810702020701ffff

Severity: Info

Alert Category: Critical - Voltage

Serviceable: No

CIM Information: **Prefix:** PLAT and **ID:** 0523

SNMP Trap ID: 1

Automatically notify Support: No

User response: Information only; no action is required.

8107020f-2201ffff Sensor TXT ACM Module has transitioned to a less severe state from critical.

Explanation: TXT ACM Module has returned to a normal state.

May also be shown as 8107020f2201ffff or 0x8107020f2201ffff

Severity: Info

Alert Category: Critical - Other

Serviceable: No

CIM Information: **Prefix:** PLAT and **ID:** 0523

SNMP Trap ID: 50

Automatically notify Support: No

User response: Information only; no action is required.

8107020f-2582ffff Sensor No I/O Resources has transitioned to a less severe state from critical.

Explanation: This message is for the use case when an implementation has detected a Sensor transition to less severe from critical.

May also be shown as 8107020f2582ffff or 0x8107020f2582ffff

Severity: Info

Alert Category: Critical - Other

Serviceable: No

CIM Information: **Prefix:** PLAT and **ID:** 0523

SNMP Trap ID: 50

Automatically notify Support: No

User response: This is a UEFI detected event. The UEFI diagnostic code for this event can be found in the logged IMM message text. Please refer to the UEFI diagnostic code in the "UEFI diagnostic code" section of the Information Center for the appropriate user response.

81070217-0b05ffff Sensor ETE Fault has transitioned to a less severe state from critical.

Explanation: The ETE connector has improved to a less severe state of operation.

May also be shown as 810702170b05ffff or 0x810702170b05ffff

Severity: Info

Alert Category: Critical - Other

Serviceable: No

CIM Information: **Prefix:** PLAT and **ID:** 0523

SNMP Trap ID: 50

Automatically notify Support: No

User response: Information only; no action is required.

81070217-2c01ffff Sensor Mezz Exp 1 Fault has transitioned to a less severe state from critical.

Explanation: The I/O Expansion card is no longer in a fault condition.

May also be shown as 810702172c01ffff or 0x810702172c01ffff

Severity: Info

Alert Category: Critical - Other

Serviceable: No

CIM Information: **Prefix:** PLAT and **ID:** 0523

SNMP Trap ID: 50

Automatically notify Support: No

User response: Information only; no action is required.

81070217-2c02ffff Sensor Mezz Exp 2 Fault has transitioned to a less severe state from critical.

Explanation: The I/O Expansion card is no longer in a fault condition.

May also be shown as 810702172c02ffff or 0x810702172c02ffff

Severity: Info

Alert Category: Critical - Other

Serviceable: No

CIM Information: **Prefix:** PLAT and **ID:** 0523

SNMP Trap ID: 50

Automatically notify Support: No

User response: Information only; no action is required.

81070217-2c03ffff Sensor Mezz Exp 3 Fault has transitioned to a less severe state from critical.

Explanation: The I/O Expansion card is no longer in a fault condition.

May also be shown as 810702172c03ffff or 0x810702172c03ffff

Severity: Info

Alert Category: Critical - Other

Serviceable: No

CIM Information: **Prefix:** PLAT and **ID:** 0523

SNMP Trap ID: 50

Automatically notify Support: No

User response: Information only; no action is required.

81070217-2c04ffff Sensor Mezz Exp 4 Fault has transitioned to a less severe state from critical.

Explanation: The I/O Expansion card is no longer in a fault condition.

May also be shown as 810702172c04ffff or 0x810702172c04ffff

Severity: Info

Alert Category: Critical - Other

Serviceable: No

CIM Information: **Prefix:** PLAT and **ID:** 0523

SNMP Trap ID: 50

Automatically notify Support: No

User response: Information only; no action is required.

81070219-0701ffff Sensor Sys Board Fault has transitioned to a less severe state from critical.

Explanation: This message is for the use case when an implementation has detected a Sensor transition to less severe from critical.

May also be shown as 810702190701ffff or 0x810702190701ffff

Severity: Info

Alert Category: Critical - Other

Serviceable: No

CIM Information: **Prefix:** PLAT and **ID:** 0523

SNMP Trap ID: 50

Automatically notify Support: No

User response: This is a UEFI detected event. The UEFI diagnostic code for this event can be found in the logged IMM message text. Please refer to the UEFI diagnostic code in the "UEFI diagnostic code" section of the Information Center for the appropriate user response.

8107021b-0301ffff Sensor CPU 1 QPILinkErr has transitioned to a less severe state from critical.

Explanation: IMM has detected that CPU 1 has recovered from a QPI Link Error.

May also be shown as 8107021b0301ffff or 0x8107021b0301ffff

Severity: Info

Alert Category: Critical - Other

Serviceable: No

CIM Information: **Prefix:** PLAT and **ID:** 0523

SNMP Trap ID: 50

Automatically notify Support: No

User response: Information only; no action is required.

8107021b-0302ffff Sensor CPU 2 QPILinkErr has transitioned to a less severe state from critical.

Explanation: IMM has detected that CPU 2 has recovered from a QPI Link Error.

May also be shown as 8107021b0302ffff or 0x8107021b0302ffff

Severity: Info

Alert Category: Critical - Other

Serviceable: No

CIM Information: **Prefix:** PLAT and **ID:** 0523

SNMP Trap ID: 50

Automatically notify Support: No

User response: Information only; no action is required.

8107021b-0303ffff Sensor CPU 3 QPILinkErr has transitioned to a less severe state from critical.

Explanation: IMM has detected that CPU 3 has recovered from a QPI Link Error.

May also be shown as 8107021b0303ffff or 0x8107021b0303ffff

Severity: Info

Alert Category: Critical - Other

Serviceable: No

CIM Information: **Prefix:** PLAT and **ID:** 0523

SNMP Trap ID: 50

Automatically notify Support: No

User response: Information only; no action is required.

8107021b-0304ffff Sensor CPU 4 QPILinkErr has transitioned to a less severe state from critical.

Explanation: IMM has detected that CPU 4 has recovered from a QPI Link Error.

May also be shown as 8107021b0304ffff or 0x8107021b0304ffff

Severity: Info

Alert Category: Critical - Other

Serviceable: No

CIM Information: **Prefix:** PLAT and **ID:** 0523

SNMP Trap ID: 50

Automatically notify Support: No

User response: Information only; no action is required.

81070301-0301ffff Sensor CPU 1 Overtemp has deasserted the transition to non-recoverable from a less severe state.

Explanation: The previously high microprocessor 1 temperature has returned to below its specified threshold.

May also be shown as 810703010301ffff or 0x810703010301ffff

Severity: Info

Alert Category: Critical - Temperature

Serviceable: No

CIM Information: **Prefix:** PLAT and **ID:** 0525

SNMP Trap ID: 0

Automatically notify Support: No

User response: Information only; no action is required.

81070301-0302ffff Sensor CPU 2 Overtemp has deasserted the transition to non-recoverable from a less severe state.

Explanation: The previously high microprocessor 2 temperature has returned to below its specified threshold.

May also be shown as 810703010302ffff or 0x810703010302ffff

Severity: Info

Alert Category: Critical - Temperature

Serviceable: No

CIM Information: **Prefix:** PLAT and **ID:** 0525

SNMP Trap ID: 0

Automatically notify Support: No

User response: Information only; no action is required.

81070301-0303ffff Sensor CPU 3 Overtemp has deasserted the transition to non-recoverable from a less severe state.

Explanation: The previously high microprocessor 3 temperature has returned to below its specified threshold.

May also be shown as 810703010303ffff or 0x810703010303ffff

Severity: Info

Alert Category: Critical - Temperature

Serviceable: No

CIM Information: **Prefix:** PLAT and **ID:** 0525

SNMP Trap ID: 0

Automatically notify Support: No

User response: Information only; no action is required.

81070301-0304ffff Sensor CPU 4 Overtemp has deasserted the transition to non-recoverable from a less severe state.

Explanation: The previously high microprocessor 1 temperature has returned to below its specified threshold.

May also be shown as 810703010304ffff or 0x810703010304ffff

Severity: Info

Alert Category: Critical - Temperature

Serviceable: No

CIM Information: **Prefix:** PLAT and **ID:** 0525

SNMP Trap ID: 0

Automatically notify Support: No

User response: Information only; no action is required.

81070301-2c01ffff Sensor Mezz Exp 1 temp has deasserted the transition to non-recoverable from a less severe state.

Explanation: The previously high I/O Expansion card temperature has returned below its specified threshold.

May also be shown as 810703012c01ffff or 0x810703012c01ffff

Severity: Info

Alert Category: Critical - Temperature

Serviceable: No

CIM Information: **Prefix:** PLAT and **ID:** 0525

SNMP Trap ID: 0

Automatically notify Support: No

User response: Information only; no action is required.

81070301-2c02ffff Sensor Mezz Exp 2 temp has deasserted the transition to non-recoverable from a less severe state.

Explanation: The previously high I/O Expansion card temperature has returned below its specified threshold.

May also be shown as 810703012c02ffff or 0x810703012c02ffff

Severity: Info

Alert Category: Critical - Temperature

Serviceable: No

CIM Information: **Prefix:** PLAT and **ID:** 0525

SNMP Trap ID: 0

Automatically notify Support: No

User response: Information only; no action is required.

81070301-2c03ffff Sensor Mezz Exp 3 temp has deasserted the transition to non-recoverable from a less severe state.

Explanation: The previously high I/O Expansion card temperature has returned below its specified threshold.

May also be shown as 810703012c03ffff or 0x810703012c03ffff

Severity: Info

Alert Category: Critical - Temperature

Serviceable: No

CIM Information: **Prefix:** PLAT and **ID:** 0525

SNMP Trap ID: 0

Automatically notify Support: No

User response: Information only; no action is required.

81070301-2c04ffff Sensor Mezz Exp 4 temp has deasserted the transition to non-recoverable from a less severe state.

Explanation: The previously high I/O Expansion card temperature has returned below its specified threshold.

May also be shown as 810703012c04ffff or 0x810703012c04ffff

Severity: Info

Alert Category: Critical - Temperature

Serviceable: No

CIM Information: **Prefix:** PLAT and **ID:** 0525

SNMP Trap ID: 0

Automatically notify Support: No

User response: Information only; no action is required.

81070301-2d01ffff Sensor PCH Overtemp has deasserted the transition to non-recoverable from a less severe state.

Explanation: The PCH temperature has returned to below its specified threshold.

May also be shown as 810703012d01ffff or 0x810703012d01ffff

Severity: Info

Alert Category: Critical - Temperature

Serviceable: No

CIM Information: **Prefix:** PLAT and **ID:** 0525

SNMP Trap ID: 0

Automatically notify Support: No

User response: Information only; no action is required.

81070301-3701ffff Sensor Inlet 1 temp has deasserted the transition to non-recoverable from a less severe state.

Explanation: The previously high inlet temperature 1 has returned to below its specified threshold.

May also be shown as 810703013701ffff or 0x810703013701ffff

Severity: Info

Alert Category: Critical - Temperature

Serviceable: No

CIM Information: **Prefix:** PLAT and **ID:** 0525

SNMP Trap ID: 0

Automatically notify Support: No

User response: Information only; no action is required.

81070301-3702ffff Sensor Inlet 2 temp has deasserted the transition to non-recoverable from a less severe state.

Explanation: The previously high inlet temperature 2 has returned to below its specified threshold.

May also be shown as 810703013702ffff or 0x810703013702ffff

Severity: Info

Alert Category: Critical - Temperature

Serviceable: No

CIM Information: **Prefix:** PLAT and **ID:** 0525

SNMP Trap ID: 0

Automatically notify Support: No

User response: Information only; no action is required.

81070601-2c01ffff Sensor Mezz Exp 1 temp has deasserted the transition to non-recoverable.

Explanation: The previously high I/O Expansion card temperature has returned below its specified threshold.

May also be shown as 810706012c01ffff or 0x810706012c01ffff

Severity: Info

Alert Category: Critical - Temperature

Serviceable: No

CIM Information: **Prefix:** PLAT and **ID:** 0531

SNMP Trap ID: 0

Automatically notify Support: No

User response: Information only; no action is required.

81070601-2c02ffff Sensor Mezz Exp 2 temp has deasserted the transition to non-recoverable.

Explanation: The previously high I/O Expansion card temperature has returned below its specified threshold.

May also be shown as 810706012c02ffff or 0x810706012c02ffff

Severity: Info

Alert Category: Critical - Temperature

Serviceable: No

CIM Information: **Prefix:** PLAT and **ID:** 0531

SNMP Trap ID: 0

Automatically notify Support: No

User response: Information only; no action is required.

81070601-2c03ffff Sensor Mezz Exp 3 temp has deasserted the transition to non-recoverable.

Explanation: The previously high I/O Expansion card temperature has returned below its specified threshold.

May also be shown as 810706012c03ffff or 0x810706012c03ffff

Severity: Info

Alert Category: Critical - Temperature

Serviceable: No

CIM Information: **Prefix:** PLAT and **ID:** 0531

SNMP Trap ID: 0

Automatically notify Support: No

User response: Information only; no action is required.

81070601-2c04ffff Sensor Mezz Exp 4 temp has deasserted the transition to non-recoverable.

Explanation: The previously high I/O Expansion card temperature has returned below its specified threshold.

May also be shown as 810706012c04ffff or 0x810706012c04ffff

Severity: Info

Alert Category: Critical - Temperature

Serviceable: No

CIM Information: **Prefix:** PLAT and **ID:** 0531

SNMP Trap ID: 0

Automatically notify Support: No

User response: Information only; no action is required.

8107060f-2201ffff Sensor BOFM Config Err has deasserted the transition to non-recoverable.

Explanation: This message is for the use case when an implementation has detected that the BOFM Config Sensor transition to non-recoverable has deasserted.

May also be shown as 8107060f2201ffff or 0x8107060f2201ffff

Severity: Info

Alert Category: Critical - Other

Serviceable: No

CIM Information: **Prefix:** PLAT and **ID:** 0531

SNMP Trap ID: 50

Automatically notify Support: No

User response: Information only; no user action required.

81070617-2c01ffff Sensor Mezz Exp 1 Fault has deasserted the transition to non-recoverable.

Explanation: The I/O expansion adapter in I/O expansion connector 1 no longer reports a non-recoverable condition.

May also be shown as 810706172c01ffff or 0x810706172c01ffff

Severity: Info

Alert Category: Critical - Other

Serviceable: No

CIM Information: **Prefix:** PLAT and **ID:** 0531

SNMP Trap ID: 50

Automatically notify Support: No

User response: Information only; no action is required.

81070617-2c02ffff Sensor Mezz Exp 2 Fault has deasserted the transition to non-recoverable.

Explanation: The I/O expansion adapter in I/O expansion connector 2 no longer reports a non-recoverable condition.

May also be shown as 810706172c02ffff or 0x810706172c02ffff

Severity: Info

Alert Category: Critical - Other

Serviceable: No

CIM Information: **Prefix:** PLAT and **ID:** 0531

SNMP Trap ID: 50

Automatically notify Support: No

User response: Information only; no action is required.

81070617-2c03ffff Sensor Mezz Exp 3 Fault has deasserted the transition to non-recoverable.

Explanation: The I/O expansion adapter in I/O expansion connector 3 no longer reports a non-recoverable condition.

May also be shown as 810706172c03ffff or 0x810706172c03ffff

Severity: Info

Alert Category: Critical - Other

Serviceable: No

CIM Information: **Prefix:** PLAT and **ID:** 0531

SNMP Trap ID: 50

Automatically notify Support: No

User response: Information only; no action is required.

81070617-2c04ffff Sensor Mezz Exp 4 Fault has deasserted the transition to non-recoverable.

Explanation: The I/O expansion adapter in I/O expansion connector 4 no longer reports a non-recoverable condition.

May also be shown as 810706172c04ffff or 0x810706172c04ffff

Severity: Info

Alert Category: Critical - Other

Serviceable: No

CIM Information: **Prefix:** PLAT and **ID:** 0531

SNMP Trap ID: 50

Automatically notify Support: No

User response: Information only; no action is required.

81090112-2101ffff Device [LogicalDeviceElementName] has been disabled.

Explanation: An account with IPMI / SNMP access has been disabled.

May also be shown as 810901122101ffff or 0x810901122101ffff

Severity: Info

Alert Category: System - Other

Serviceable: No

CIM Information: **Prefix:** PLAT and **ID:** 0539

SNMP Trap ID:

Automatically notify Support: No

User response: Information only; no action is required.

810b010c-2581ffff Redundancy Lost for [RedundancySetElementName] has deasserted.

Explanation: This message is for the use case when Redundacy Lost has deasserted.

May also be shown as 810b010c2581ffff or 0x810b010c2581ffff

Severity: Info

Alert Category: Critical - Memory

Serviceable: No

CIM Information: **Prefix:** PLAT and **ID:** 0803

SNMP Trap ID: 41

Automatically notify Support: No

User response: This is a UEFI detected event. The UEFI diagnostic code for this event can be found in the logged IMM message text. Please refer to the UEFI diagnostic code in the "UEFI diagnostic code" section of the Information Center for the appropriate user response.

810b030c-2581ffff Non-redundant:Sufficient Resources from Redundancy Degraded or Fully Redundant for [RedundancySetElementName] has deasserted.

Explanation: Memory component group has regained its redundancy.

May also be shown as 810b030c2581ffff or 0x810b030c2581ffff

Severity: Info

Alert Category: Warning - Memory

Serviceable: No

CIM Information: **Prefix:** PLAT and **ID:** 0807

SNMP Trap ID: 43

Automatically notify Support: No

User response: This is a UEFI detected event. The UEFI diagnostic code for this event can be found in the logged IMM message text. Please refer to the UEFI diagnostic code in the "UEFI diagnostic code" section of the Information Center for the appropriate user response.

810b050c-2581ffff Non-redundant:Insufficient Resources for [RedundancySetElementName] has deasserted.

Explanation: This message is for the use case when a Redundancy Set has transitioned from Non-redundant:Insufficient Resources.

May also be shown as 810b050c2581ffff or 0x810b050c2581ffff

Severity: Info

Alert Category: Critical - Memory

Serviceable: No

CIM Information: **Prefix:** PLAT and **ID:** 0811

SNMP Trap ID: 41

Automatically notify Support: No

User response: This is a UEFI detected event. The UEFI diagnostic code for this event can be found in the logged

IMM message text. Please refer to the UEFI diagnostic code in the "UEFI diagnostic code" section of the Information Center for the appropriate user response.

816f0007-0301ffff [ProcessorElementName] has Recovered from IERR.

Explanation: This message is for the use case when an implementation has detected a Processor Recovered - IERR Condition.

May also be shown as 816f00070301ffff or 0x816f00070301ffff

Severity: Info

Alert Category: Critical - CPU

Serviceable: No

CIM Information: **Prefix:** PLAT and **ID:** 0043

SNMP Trap ID: 40

Automatically notify Support: No

User response: This is a UEFI detected event. The UEFI diagnostic code for this event can be found in the logged IMM message text. Please refer to the UEFI diagnostic code in the "UEFI diagnostic code" section of the Information Center for the appropriate user response.

816f0007-0302ffff [ProcessorElementName] has Recovered from IERR.

Explanation: This message is for the use case when an implementation has detected a Processor Recovered - IERR Condition.

May also be shown as 816f00070302ffff or 0x816f00070302ffff

Severity: Info

Alert Category: Critical - CPU

Serviceable: No

CIM Information: **Prefix:** PLAT and **ID:** 0043

SNMP Trap ID: 40

Automatically notify Support: No

User response: This is a UEFI detected event. The UEFI diagnostic code for this event can be found in the logged IMM message text. Please refer to the UEFI diagnostic code in the "UEFI diagnostic code" section of the Information Center for the appropriate user response.

816f0007-0303ffff [ProcessorElementName] has Recovered from IERR.

Explanation: This message is for the use case when an implementation has detected a Processor Recovered - IERR Condition.

May also be shown as 816f00070303ffff or 0x816f00070303ffff

Severity: Info

Alert Category: Critical - CPU

Serviceable: No

CIM Information: **Prefix:** PLAT and **ID:** 0043

SNMP Trap ID: 40

Automatically notify Support: No

User response: This is a UEFI detected event. The UEFI diagnostic code for this event can be found in the logged IMM message text. Please refer to the UEFI diagnostic code in the "UEFI diagnostic code" section of the Information Center for the appropriate user response.

816f0007-0304ffff [ProcessorElementName] has Recovered from IERR.

Explanation: This message is for the use case when an implementation has detected a Processor Recovered - IERR Condition.

May also be shown as 816f00070304ffff or 0x816f00070304ffff

Severity: Info

Alert Category: Critical - CPU

Serviceable: No

CIM Information: **Prefix:** PLAT and **ID:** 0043

SNMP Trap ID: 40

Automatically notify Support: No

User response: This is a UEFI detected event. The UEFI diagnostic code for this event can be found in the logged IMM message text. Please refer to the UEFI diagnostic code in the "UEFI diagnostic code" section of the Information Center for the appropriate user response.

816f0007-2584ffff [ProcessorElementName] has Recovered from IERR.

Explanation: This message is for the use case when an implementation has detected a Processor Recovered - IERR Condition. All CPUs. One of CPUs.

May also be shown as 816f00072584ffff or 0x816f00072584ffff

Severity: Info

Alert Category: Critical - CPU

Serviceable: No

CIM Information: **Prefix:** PLAT and **ID:** 0043

SNMP Trap ID: 40

Automatically notify Support: No

User response: This is a UEFI detected event. The UEFI diagnostic code for this event can be found in the logged IMM message text. Please refer to the UEFI diagnostic code in the "UEFI diagnostic code" section of the Information Center for the appropriate user response.

816f0009-0701ffff [PowerSupplyElementName] has been turned on.

Explanation: IMM has detected that the system power has been turned on.

May also be shown as 816f00090701ffff or 0x816f00090701ffff

Severity: Info

Alert Category: System - Power On

Serviceable: No

CIM Information: **Prefix:** PLAT and **ID:** 0107

SNMP Trap ID: 24

Automatically notify Support: No

User response: Information only; no action is required.

816f000d-0400ffff The Drive [StorageVolumeElementName] has been removed from unit [PhysicalPackageElementName].

Explanation: Presence of drive 0 is no longer detected. If hard drive is absent from drive bay a filler is required.

May also be shown as 816f000d0400ffff or 0x816f000d0400ffff

Severity: Error

Alert Category: Critical - Hard Disk drive

Serviceable: Yes

CIM Information: **Prefix:** PLAT and **ID:** 0163

SNMP Trap ID: 5

Automatically notify Support: No

User response:
- If drive was intentionally removed, no action required.
- Make sure that the drive properly seated.
- If drive is properly seated, replace the drive.

816f000d-0401ffff The Drive [StorageVolumeElementName] has been removed from unit [PhysicalPackageElementName].

Explanation: Presence of drive 1 is no longer detected. If hard drive is absent from drive bay a filler is required.

May also be shown as 816f000d0401ffff or 0x816f000d0401ffff

Severity: Error

Alert Category: Critical - Hard Disk drive

Serviceable: Yes

CIM Information: **Prefix:** PLAT and **ID:** 0163

SNMP Trap ID: 5

Automatically notify Support: No

User response:
- If drive was intentionally removed, no action required.
- Make sure that the drive properly seated.
- If drive is properly seated, replace the drive.

816f000d-0402ffff The Drive [StorageVolumeElementName] has been removed from unit [PhysicalPackageElementName].

Explanation: Presence of drive 2 is no longer detected. If hard drive is absent from drive bay a filler is required.

May also be shown as 816f000d0402ffff or 0x816f000d0402ffff

Severity: Error

Alert Category: Critical - Hard Disk drive

Serviceable: Yes

CIM Information: **Prefix:** PLAT and **ID:** 0163

SNMP Trap ID: 5

Automatically notify Support: No

User response:
- If drive was intentionally removed, no action required.
- Make sure that the drive properly seated.
- If drive is properly seated, replace the drive.

816f000d-0403ffff The Drive [StorageVolumeElementName] has been removed from unit [PhysicalPackageElementName].

Explanation: Presence of drive 3 is no longer detected. If hard drive is absent from drive bay a filler is required.

May also be shown as 816f000d0403ffff or 0x816f000d0403ffff

Severity: Error

Alert Category: Critical - Hard Disk drive

Serviceable: Yes

CIM Information: **Prefix:** PLAT and **ID:** 0163

SNMP Trap ID: 5

Automatically notify Support: No

User response:

- If drive was intentionally removed, no action required.
- Make sure that the drive properly seated.
- If drive is properly seated, replace the drive.

816f000d-0404ffff The Drive [StorageVolumeElementName] has been removed from unit [PhysicalPackageElementName].

Explanation: Presence of drive 4 is no longer detected. If hard drive is absent from drive bay a filler is required.

May also be shown as 816f000d0404ffff or 0x816f000d0404ffff

Severity: Error

Alert Category: Critical - Hard Disk drive

Serviceable: Yes

CIM Information: **Prefix:** PLAT and **ID:** 0163

SNMP Trap ID: 5

Automatically notify Support: No

User response:

- If drive was intentionally removed, no action required.
- Make sure that the drive properly seated.
- If drive is properly seated, replace the drive.

816f000d-0405ffff The Drive [StorageVolumeElementName] has been removed from unit [PhysicalPackageElementName].

Explanation: Presence of drive 5 is no longer detected. If hard drive is absent from drive bay a filler is required.

May also be shown as 816f000d0405ffff or 0x816f000d0405ffff

Severity: Error

Alert Category: Critical - Hard Disk drive

Serviceable: Yes

CIM Information: **Prefix:** PLAT and **ID:** 0163

SNMP Trap ID: 5

Automatically notify Support: No

User response:

- If drive was intentionally removed, no action required.
- Make sure that the drive properly seated.

- If drive is properly seated, replace the drive.

816f000d-0406ffff The Drive [StorageVolumeElementName] has been removed from unit [PhysicalPackageElementName].

Explanation: Presence of drive 6 is no longer detected. If hard drive is absent from drive bay a filler is required.

May also be shown as 816f000d0406ffff or 0x816f000d0406ffff

Severity: Error

Alert Category: Critical - Hard Disk drive

Serviceable: Yes

CIM Information: **Prefix:** PLAT and **ID:** 0163

SNMP Trap ID: 5

Automatically notify Support: No

User response:
- If drive was intentionally removed, no action required.
- Make sure that the drive properly seated.
- If drive is properly seated, replace the drive.

816f000d-0407ffff The Drive [StorageVolumeElementName] has been removed from unit [PhysicalPackageElementName].

Explanation: Presence of drive 7 is no longer detected. If hard drive is absent from drive bay a filler is required.

May also be shown as 816f000d0407ffff or 0x816f000d0407ffff

Severity: Error

Alert Category: Critical - Hard Disk drive

Serviceable: Yes

CIM Information: **Prefix:** PLAT and **ID:** 0163

SNMP Trap ID: 5

Automatically notify Support: No

User response:
- If drive was intentionally removed, no action required.
- Make sure that the drive properly seated.
- If drive is properly seated, replace the drive.

816f000f-2201ffff The System [ComputerSystemElementName] has detected a POST Error deassertion.

Explanation: This message is for the use case when an implementation has detected that Post Error has deasserted. ABR Status. Firmware Error. Sys Boot Status.

May also be shown as 816f000f2201ffff or 0x816f000f2201ffff

Severity: Info

Alert Category: Critical - Other

Serviceable: No

CIM Information: **Prefix:** PLAT and **ID:** 0185

SNMP Trap ID: 50

Automatically notify Support: No

User response: This is a UEFI detected event. The UEFI diagnostic code for this event can be found in the logged

IMM message text. Please refer to the UEFI diagnostic code in the "UEFI diagnostic code" section of the Information Center for the appropriate user response.

816f0013-1701ffff System [ComputerSystemElementName] has recovered from a diagnostic interrupt.

Explanation: The system has recovered from a Front Panel NMI / Diagnostic Interrupt.

May also be shown as 816f00131701ffff or 0x816f00131701ffff

Severity: Info

Alert Category: Critical - Other

Serviceable: No

CIM Information: **Prefix:** PLAT and **ID:** 0223

SNMP Trap ID: 50

Automatically notify Support: No

User response: Information only; no action is required.

816f0021-2201ffff Fault condition removed on slot [PhysicalConnectorElementName] on system [ComputerSystemElementName].

Explanation: This message is for the use case when an implementation has detected a Fault condition in a slot has been removed. No Op ROM Space.

May also be shown as 816f00212201ffff or 0x816f00212201ffff

Severity: Info

Alert Category: Critical - Other

Serviceable: No

CIM Information: **Prefix:** PLAT and **ID:** 0331

SNMP Trap ID: 50

Automatically notify Support: No

User response: This is a UEFI detected event. The UEFI diagnostic code for this event can be found in the logged IMM message text. Please refer to the UEFI diagnostic code in the "UEFI diagnostic code" section of the Information Center for the appropriate user response.

816f0021-2582ffff Fault condition removed on slot [PhysicalConnectorElementName] on system [ComputerSystemElementName].

Explanation: This message is for the use case when an implementation has detected a Fault condition in a slot has been removed. PCIe Error.

May also be shown as 816f00212582ffff or 0x816f00212582ffff

Severity: Info

Alert Category: Critical - Other

Serviceable: No

CIM Information: **Prefix:** PLAT and **ID:** 0331

SNMP Trap ID: 50

Automatically notify Support: No

User response: This is a UEFI detected event. The UEFI diagnostic code for this event can be found in the logged IMM message text. Please refer to the UEFI diagnostic code in the "UEFI diagnostic code" section of the Information Center for the appropriate user response.

816f0028-2101ffff Sensor TPM Cmd Failures has returned to normal on management system [ComputerSystemElementName].

Explanation: TPM was initialized and started successfully.

May also be shown as 816f00282101ffff or 0x816f00282101ffff

Severity: Info

Alert Category: Warning - Other

Serviceable: No

CIM Information: **Prefix:** PLAT and **ID:** 0399

SNMP Trap ID: 60

Automatically notify Support: No

User response: Information Only; no action is required.

816f0107-0301ffff An Over-Temperature Condition has been removed on [ProcessorElementName].

Explanation: The microprocessor 1 temperature has returned to below the critical level.

May also be shown as 816f01070301ffff or 0x816f01070301ffff

Severity: Info

Alert Category: Critical - Temperature

Serviceable: No

CIM Information: **Prefix:** PLAT and **ID:** 0037

SNMP Trap ID: 0

Automatically notify Support: No

User response: Information only; no action is required.

816f0107-0302ffff An Over-Temperature Condition has been removed on [ProcessorElementName].

Explanation: The microprocessor 2 temperature has returned to below the critical level.

May also be shown as 816f01070302ffff or 0x816f01070302ffff

Severity: Info

Alert Category: Critical - Temperature

Serviceable: No

CIM Information: **Prefix:** PLAT and **ID:** 0037

SNMP Trap ID: 0

Automatically notify Support: No

User response: Information only; no action is required.

816f0107-0303ffff An Over-Temperature Condition has been removed on [ProcessorElementName].

Explanation: The microprocessor 3 temperature has returned to below the critical level.

May also be shown as 816f01070303ffff or 0x816f01070303ffff

Severity: Info

Alert Category: Critical - Temperature

Serviceable: No

CIM Information: **Prefix:** PLAT and **ID:** 0037

SNMP Trap ID: 0

Automatically notify Support: No

User response: Information only; no action is required.

816f0107-0304ffff An Over-Temperature Condition has been removed on [ProcessorElementName].

Explanation: The microprocessor 4 temperature has returned to below the critical level.

May also be shown as 816f01070304ffff or 0x816f01070304ffff

Severity: Info

Alert Category: Critical - Temperature

Serviceable: No

CIM Information: **Prefix:** PLAT and **ID:** 0037

SNMP Trap ID: 0

Automatically notify Support: No

User response: Information only; no action is required.

816f0107-2584ffff An Over-Temperature Condition has been removed on [ProcessorElementName].

Explanation: The microprocessor 4 temperature has returned to below the critical level. All CPUs. One of CPUs.

May also be shown as 816f01072584ffff or 0x816f01072584ffff

Severity: Info

Alert Category: Critical - Temperature

Serviceable: No

CIM Information: **Prefix:** PLAT and **ID:** 0037

SNMP Trap ID: 0

Automatically notify Support: No

User response: Information only; no action is required.

816f010c-2001ffff Uncorrectable error recovery detected for [PhysicalMemoryElementName] on Subsystem [MemoryElementName].

Explanation: This message is for the use case when an implementation has detected a Memory uncorrectable error recovery.

May also be shown as 816f010c2001ffff or 0x816f010c2001ffff

Severity: Info

Alert Category: Critical - Memory

Serviceable: No

CIM Information: **Prefix:** PLAT and **ID:** 0139

SNMP Trap ID: 41

Automatically notify Support: No

User response: This is a UEFI detected event. The UEFI diagnostic code for this event can be found in the logged IMM message text. Please refer to the UEFI diagnostic code in the "UEFI diagnostic code" section of the Information Center for the appropriate user response.

816f010c-2002ffff Uncorrectable error recovery detected for [PhysicalMemoryElementName] on Subsystem [MemoryElementName].

Explanation: This message is for the use case when an implementation has detected a Memory uncorrectable error recovery.

May also be shown as 816f010c2002ffff or 0x816f010c2002ffff

Severity: Info

Alert Category: Critical - Memory

Serviceable: No

CIM Information: **Prefix:** PLAT and **ID:** 0139

SNMP Trap ID: 41

Automatically notify Support: No

User response: This is a UEFI detected event. The UEFI diagnostic code for this event can be found in the logged IMM message text. Please refer to the UEFI diagnostic code in the "UEFI diagnostic code" section of the Information Center for the appropriate user response.

816f010c-2003ffff Uncorrectable error recovery detected for [PhysicalMemoryElementName] on Subsystem [MemoryElementName].

Explanation: This message is for the use case when an implementation has detected a Memory uncorrectable error recovery.

May also be shown as 816f010c2003ffff or 0x816f010c2003ffff

Severity: Info

Alert Category: Critical - Memory

Serviceable: No

CIM Information: **Prefix:** PLAT and **ID:** 0139

SNMP Trap ID: 41

Automatically notify Support: No

User response: This is a UEFI detected event. The UEFI diagnostic code for this event can be found in the logged IMM message text. Please refer to the UEFI diagnostic code in the "UEFI diagnostic code" section of the Information Center for the appropriate user response.

816f010c-2004ffff Uncorrectable error recovery detected for [PhysicalMemoryElementName] on Subsystem [MemoryElementName].

Explanation: This message is for the use case when an implementation has detected a Memory uncorrectable error recovery.

May also be shown as 816f010c2004ffff or 0x816f010c2004ffff

Severity: Info

Alert Category: Critical - Memory

Serviceable: No

CIM Information: **Prefix:** PLAT and **ID:** 0139

SNMP Trap ID: 41

Automatically notify Support: No

User response: This is a UEFI detected event. The UEFI diagnostic code for this event can be found in the logged IMM message text. Please refer to the UEFI diagnostic code in the "UEFI diagnostic code" section of the Information Center for the appropriate user response.

816f010c-2005ffff Uncorrectable error recovery detected for [PhysicalMemoryElementName] on Subsystem [MemoryElementName].

Explanation: This message is for the use case when an implementation has detected a Memory uncorrectable error recovery.

May also be shown as 816f010c2005ffff or 0x816f010c2005ffff

Severity: Info

Alert Category: Critical - Memory

Serviceable: No

CIM Information: **Prefix:** PLAT and **ID:** 0139

SNMP Trap ID: 41

Automatically notify Support: No

User response: This is a UEFI detected event. The UEFI diagnostic code for this event can be found in the logged IMM message text. Please refer to the UEFI diagnostic code in the "UEFI diagnostic code" section of the Information Center for the appropriate user response.

816f010c-2006ffff Uncorrectable error recovery detected for [PhysicalMemoryElementName] on Subsystem [MemoryElementName].

Explanation: This message is for the use case when an implementation has detected a Memory uncorrectable error recovery.

May also be shown as 816f010c2006ffff or 0x816f010c2006ffff

Severity: Info

Alert Category: Critical - Memory

Serviceable: No

CIM Information: **Prefix:** PLAT and **ID:** 0139

SNMP Trap ID: 41

Automatically notify Support: No

User response: This is a UEFI detected event. The UEFI diagnostic code for this event can be found in the logged IMM message text. Please refer to the UEFI diagnostic code in the "UEFI diagnostic code" section of the Information Center for the appropriate user response.

816f010c-2007ffff Uncorrectable error recovery detected for [PhysicalMemoryElementName] on Subsystem [MemoryElementName].

Explanation: This message is for the use case when an implementation has detected a Memory uncorrectable error recovery.

May also be shown as 816f010c2007ffff or 0x816f010c2007ffff

Severity: Info

Alert Category: Critical - Memory

Serviceable: No

CIM Information: **Prefix:** PLAT and **ID:** 0139

SNMP Trap ID: 41

Automatically notify Support: No

User response: This is a UEFI detected event. The UEFI diagnostic code for this event can be found in the logged IMM message text. Please refer to the UEFI diagnostic code in the "UEFI diagnostic code" section of the Information Center for the appropriate user response.

816f010c-2008ffff Uncorrectable error recovery detected for [PhysicalMemoryElementName] on Subsystem [MemoryElementName].

Explanation: This message is for the use case when an implementation has detected a Memory uncorrectable error recovery.

May also be shown as 816f010c2008ffff or 0x816f010c2008ffff

Severity: Info

Alert Category: Critical - Memory

Serviceable: No

CIM Information: **Prefix:** PLAT and **ID:** 0139

SNMP Trap ID: 41

Automatically notify Support: No

User response: This is a UEFI detected event. The UEFI diagnostic code for this event can be found in the logged IMM message text. Please refer to the UEFI diagnostic code in the "UEFI diagnostic code" section of the Information Center for the appropriate user response.

816f010c-2009ffff Uncorrectable error recovery detected for [PhysicalMemoryElementName] on Subsystem [MemoryElementName].

Explanation: This message is for the use case when an implementation has detected a Memory uncorrectable error recovery.

May also be shown as 816f010c2009ffff or 0x816f010c2009ffff

Severity: Info

Alert Category: Critical - Memory

Serviceable: No

CIM Information: **Prefix:** PLAT and **ID:** 0139

SNMP Trap ID: 41

Automatically notify Support: No

User response: This is a UEFI detected event. The UEFI diagnostic code for this event can be found in the logged IMM message text. Please refer to the UEFI diagnostic code in the "UEFI diagnostic code" section of the Information Center for the appropriate user response.

816f010c-200affff Uncorrectable error recovery detected for [PhysicalMemoryElementName] on Subsystem [MemoryElementName].

Explanation: This message is for the use case when an implementation has detected a Memory uncorrectable error recovery.

May also be shown as 816f010c200affff or 0x816f010c200affff

Severity: Info

Alert Category: Critical - Memory

Serviceable: No

CIM Information: **Prefix:** PLAT and **ID:** 0139

SNMP Trap ID: 41

Automatically notify Support: No

User response: This is a UEFI detected event. The UEFI diagnostic code for this event can be found in the logged IMM message text. Please refer to the UEFI diagnostic code in the "UEFI diagnostic code" section of the Information Center for the appropriate user response.

816f010c-200bffff Uncorrectable error recovery detected for [PhysicalMemoryElementName] on Subsystem [MemoryElementName].

Explanation: This message is for the use case when an implementation has detected a Memory uncorrectable error recovery.

May also be shown as 816f010c200bffff or 0x816f010c200bffff

Severity: Info

Alert Category: Critical - Memory

Serviceable: No

CIM Information: **Prefix:** PLAT and **ID:** 0139

SNMP Trap ID: 41

Automatically notify Support: No

User response: This is a UEFI detected event. The UEFI diagnostic code for this event can be found in the logged IMM message text. Please refer to the UEFI diagnostic code in the "UEFI diagnostic code" section of the Information Center for the appropriate user response.

816f010c-200cffff Uncorrectable error recovery detected for [PhysicalMemoryElementName] on Subsystem [MemoryElementName].

Explanation: This message is for the use case when an implementation has detected a Memory uncorrectable error recovery.

May also be shown as 816f010c200cffff or 0x816f010c200cffff

Severity: Info

Alert Category: Critical - Memory

Serviceable: No

CIM Information: **Prefix:** PLAT and **ID:** 0139

SNMP Trap ID: 41

Automatically notify Support: No

User response: This is a UEFI detected event. The UEFI diagnostic code for this event can be found in the logged IMM message text. Please refer to the UEFI diagnostic code in the "UEFI diagnostic code" section of the Information Center for the appropriate user response.

816f010c-200dffff Uncorrectable error recovery detected for [PhysicalMemoryElementName] on Subsystem [MemoryElementName].

Explanation: This message is for the use case when an implementation has detected a Memory uncorrectable error recovery.

May also be shown as 816f010c200dffff or 0x816f010c200dffff

Severity: Info

Alert Category: Critical - Memory

Serviceable: No

CIM Information: **Prefix:** PLAT and **ID:** 0139

SNMP Trap ID: 41

Automatically notify Support: No

User response: This is a UEFI detected event. The UEFI diagnostic code for this event can be found in the logged IMM message text. Please refer to the UEFI diagnostic code in the "UEFI diagnostic code" section of the Information Center for the appropriate user response.

816f010c-200effff Uncorrectable error recovery detected for [PhysicalMemoryElementName] on Subsystem [MemoryElementName].

Explanation: This message is for the use case when an implementation has detected a Memory uncorrectable error recovery.

May also be shown as 816f010c200effff or 0x816f010c200effff

Severity: Info

Alert Category: Critical - Memory

Serviceable: No

CIM Information: **Prefix:** PLAT and **ID:** 0139

SNMP Trap ID: 41

Automatically notify Support: No

User response: This is a UEFI detected event. The UEFI diagnostic code for this event can be found in the logged IMM message text. Please refer to the UEFI diagnostic code in the "UEFI diagnostic code" section of the Information Center for the appropriate user response.

816f010c-200fffff Uncorrectable error recovery detected for [PhysicalMemoryElementName] on Subsystem [MemoryElementName].

Explanation: This message is for the use case when an implementation has detected a Memory uncorrectable error recovery.

May also be shown as 816f010c200fffff or 0x816f010c200fffff

Severity: Info

Alert Category: Critical - Memory

Serviceable: No

CIM Information: **Prefix:** PLAT and **ID:** 0139

SNMP Trap ID: 41

Automatically notify Support: No

User response: This is a UEFI detected event. The UEFI diagnostic code for this event can be found in the logged IMM message text. Please refer to the UEFI diagnostic code in the "UEFI diagnostic code" section of the Information Center for the appropriate user response.

816f010c-2010ffff Uncorrectable error recovery detected for [PhysicalMemoryElementName] on Subsystem [MemoryElementName].

Explanation: This message is for the use case when an implementation has detected a Memory uncorrectable error recovery.

May also be shown as 816f010c2010ffff or 0x816f010c2010ffff

Severity: Info

Alert Category: Critical - Memory

Serviceable: No

CIM Information: **Prefix:** PLAT and **ID:** 0139

SNMP Trap ID: 41

Automatically notify Support: No

User response: This is a UEFI detected event. The UEFI diagnostic code for this event can be found in the logged IMM message text. Please refer to the UEFI diagnostic code in the "UEFI diagnostic code" section of the Information Center for the appropriate user response.

816f010c-2011ffff Uncorrectable error recovery detected for [PhysicalMemoryElementName] on Subsystem [MemoryElementName].

Explanation: This message is for the use case when an implementation has detected a Memory uncorrectable error recovery.

May also be shown as 816f010c2011ffff or 0x816f010c2011ffff

Severity: Info

Alert Category: Critical - Memory

Serviceable: No

CIM Information: **Prefix:** PLAT and **ID:** 0139

SNMP Trap ID: 41

Automatically notify Support: No

User response: This is a UEFI detected event. The UEFI diagnostic code for this event can be found in the logged IMM message text. Please refer to the UEFI diagnostic code in the "UEFI diagnostic code" section of the Information Center for the appropriate user response.

816f010c-2012ffff Uncorrectable error recovery detected for [PhysicalMemoryElementName] on Subsystem [MemoryElementName].

Explanation: This message is for the use case when an implementation has detected a Memory uncorrectable error recovery.

May also be shown as 816f010c2012ffff or 0x816f010c2012ffff

Severity: Info

Alert Category: Critical - Memory

Serviceable: No

CIM Information: **Prefix:** PLAT and **ID:** 0139

SNMP Trap ID: 41

Automatically notify Support: No

User response: This is a UEFI detected event. The UEFI diagnostic code for this event can be found in the logged IMM message text. Please refer to the UEFI diagnostic code in the "UEFI diagnostic code" section of the Information Center for the appropriate user response.

816f010c-2013ffff Uncorrectable error recovery detected for [PhysicalMemoryElementName] on Subsystem [MemoryElementName].

Explanation: This message is for the use case when an implementation has detected a Memory uncorrectable error recovery.

May also be shown as 816f010c2013ffff or 0x816f010c2013ffff

Severity: Info

Alert Category: Critical - Memory

Serviceable: No

CIM Information: **Prefix:** PLAT and **ID:** 0139

SNMP Trap ID: 41

Automatically notify Support: No

User response: This is a UEFI detected event. The UEFI diagnostic code for this event can be found in the logged IMM message text. Please refer to the UEFI diagnostic code in the "UEFI diagnostic code" section of the Information Center for the appropriate user response.

816f010c-2014ffff Uncorrectable error recovery detected for [PhysicalMemoryElementName] on Subsystem [MemoryElementName].

Explanation: This message is for the use case when an implementation has detected a Memory uncorrectable error recovery.

May also be shown as 816f010c2014ffff or 0x816f010c2014ffff

Severity: Info

Alert Category: Critical - Memory

Serviceable: No

CIM Information: **Prefix:** PLAT and **ID:** 0139

SNMP Trap ID: 41

Automatically notify Support: No

User response: This is a UEFI detected event. The UEFI diagnostic code for this event can be found in the logged IMM message text. Please refer to the UEFI diagnostic code in the "UEFI diagnostic code" section of the Information Center for the appropriate user response.

816f010c-2015ffff Uncorrectable error recovery detected for [PhysicalMemoryElementName] on Subsystem [MemoryElementName].

Explanation: This message is for the use case when an implementation has detected a Memory uncorrectable error recovery.

May also be shown as 816f010c2015ffff or 0x816f010c2015ffff

Severity: Info

Alert Category: Critical - Memory

Serviceable: No

CIM Information: **Prefix:** PLAT and **ID:** 0139

SNMP Trap ID: 41

Automatically notify Support: No

User response: This is a UEFI detected event. The UEFI diagnostic code for this event can be found in the logged IMM message text. Please refer to the UEFI diagnostic code in the "UEFI diagnostic code" section of the Information Center for the appropriate user response.

816f010c-2016ffff Uncorrectable error recovery detected for [PhysicalMemoryElementName] on Subsystem [MemoryElementName].

Explanation: This message is for the use case when an implementation has detected a Memory uncorrectable error recovery.

May also be shown as 816f010c2016ffff or 0x816f010c2016ffff

Severity: Info

Alert Category: Critical - Memory

Serviceable: No

CIM Information: **Prefix:** PLAT and **ID:** 0139

SNMP Trap ID: 41

Automatically notify Support: No

User response: This is a UEFI detected event. The UEFI diagnostic code for this event can be found in the logged IMM message text. Please refer to the UEFI diagnostic code in the "UEFI diagnostic code" section of the Information Center for the appropriate user response.

816f010c-2017ffff Uncorrectable error recovery detected for [PhysicalMemoryElementName] on Subsystem [MemoryElementName].

Explanation: This message is for the use case when an implementation has detected a Memory uncorrectable error recovery.

May also be shown as 816f010c2017ffff or 0x816f010c2017ffff

Severity: Info

Alert Category: Critical - Memory

Serviceable: No

CIM Information: **Prefix:** PLAT and **ID:** 0139

SNMP Trap ID: 41

Automatically notify Support: No

User response: This is a UEFI detected event. The UEFI diagnostic code for this event can be found in the logged IMM message text. Please refer to the UEFI diagnostic code in the "UEFI diagnostic code" section of the Information Center for the appropriate user response.

816f010c-2018ffff Uncorrectable error recovery detected for [PhysicalMemoryElementName] on Subsystem [MemoryElementName].

Explanation: This message is for the use case when an implementation has detected a Memory uncorrectable error recovery.

May also be shown as 816f010c2018ffff or 0x816f010c2018ffff

Severity: Info

Alert Category: Critical - Memory

Serviceable: No

CIM Information: **Prefix:** PLAT and **ID:** 0139

SNMP Trap ID: 41

Automatically notify Support: No

User response: This is a UEFI detected event. The UEFI diagnostic code for this event can be found in the logged IMM message text. Please refer to the UEFI diagnostic code in the "UEFI diagnostic code" section of the Information Center for the appropriate user response.

816f010c-2019ffff Uncorrectable error recovery detected for [PhysicalMemoryElementName] on Subsystem [MemoryElementName].

Explanation: This message is for the use case when an implementation has detected a Memory uncorrectable error recovery.

May also be shown as 816f010c2019ffff or 0x816f010c2019ffff

Severity: Info

Alert Category: Critical - Memory

Serviceable: No

CIM Information: **Prefix:** PLAT and **ID:** 0139

SNMP Trap ID: 41

Automatically notify Support: No

User response: This is a UEFI detected event. The UEFI diagnostic code for this event can be found in the logged IMM message text. Please refer to the UEFI diagnostic code in the "UEFI diagnostic code" section of the Information Center for the appropriate user response.

816f010c-201affff Uncorrectable error recovery detected for [PhysicalMemoryElementName] on Subsystem [MemoryElementName].

Explanation: This message is for the use case when an implementation has detected a Memory uncorrectable error recovery.

May also be shown as 816f010c201affff or 0x816f010c201affff

Severity: Info

Alert Category: Critical - Memory

Serviceable: No

CIM Information: **Prefix:** PLAT and **ID:** 0139

SNMP Trap ID: 41

Automatically notify Support: No

User response: This is a UEFI detected event. The UEFI diagnostic code for this event can be found in the logged IMM message text. Please refer to the UEFI diagnostic code in the "UEFI diagnostic code" section of the Information Center for the appropriate user response.

816f010c-201bffff Uncorrectable error recovery detected for [PhysicalMemoryElementName] on Subsystem [MemoryElementName].

Explanation: This message is for the use case when an implementation has detected a Memory uncorrectable error recovery.

May also be shown as 816f010c201bffff or 0x816f010c201bffff

Severity: Info

Alert Category: Critical - Memory

Serviceable: No

CIM Information: **Prefix:** PLAT and **ID:** 0139

SNMP Trap ID: 41

Automatically notify Support: No

User response: This is a UEFI detected event. The UEFI diagnostic code for this event can be found in the logged IMM message text. Please refer to the UEFI diagnostic code in the "UEFI diagnostic code" section of the Information Center for the appropriate user response.

816f010c-201cffff Uncorrectable error recovery detected for [PhysicalMemoryElementName] on Subsystem [MemoryElementName].

Explanation: This message is for the use case when an implementation has detected a Memory uncorrectable error recovery.

May also be shown as 816f010c201cffff or 0x816f010c201cffff

Severity: Info

Alert Category: Critical - Memory

Serviceable: No

CIM Information: **Prefix:** PLAT and **ID:** 0139

SNMP Trap ID: 41

Automatically notify Support: No

User response: This is a UEFI detected event. The UEFI diagnostic code for this event can be found in the logged IMM message text. Please refer to the UEFI diagnostic code in the "UEFI diagnostic code" section of the Information Center for the appropriate user response.

816f010c-201dffff Uncorrectable error recovery detected for [PhysicalMemoryElementName] on Subsystem [MemoryElementName].

Explanation: This message is for the use case when an implementation has detected a Memory uncorrectable error recovery.

May also be shown as 816f010c201dffff or 0x816f010c201dffff

Severity: Info

Alert Category: Critical - Memory

Serviceable: No

CIM Information: **Prefix:** PLAT and **ID:** 0139

SNMP Trap ID: 41

Automatically notify Support: No

User response: This is a UEFI detected event. The UEFI diagnostic code for this event can be found in the logged IMM message text. Please refer to the UEFI diagnostic code in the "UEFI diagnostic code" section of the Information Center for the appropriate user response.

816f010c-201effff Uncorrectable error recovery detected for [PhysicalMemoryElementName] on Subsystem [MemoryElementName].

Explanation: This message is for the use case when an implementation has detected a Memory uncorrectable error recovery.

May also be shown as 816f010c201effff or 0x816f010c201effff

Severity: Info

Alert Category: Critical - Memory

Serviceable: No

CIM Information: **Prefix:** PLAT and **ID:** 0139

SNMP Trap ID: 41

Automatically notify Support: No

User response: This is a UEFI detected event. The UEFI diagnostic code for this event can be found in the logged IMM message text. Please refer to the UEFI diagnostic code in the "UEFI diagnostic code" section of the Information Center for the appropriate user response.

816f010c-201fffff Uncorrectable error recovery detected for [PhysicalMemoryElementName] on Subsystem [MemoryElementName].

Explanation: This message is for the use case when an implementation has detected a Memory uncorrectable error recovery.

May also be shown as 816f010c201fffff or 0x816f010c201fffff

Severity: Info

Alert Category: Critical - Memory

Serviceable: No

CIM Information: **Prefix:** PLAT and **ID:** 0139

SNMP Trap ID: 41

Automatically notify Support: No

User response: This is a UEFI detected event. The UEFI diagnostic code for this event can be found in the logged IMM message text. Please refer to the UEFI diagnostic code in the "UEFI diagnostic code" section of the Information Center for the appropriate user response.

816f010c-2020ffff Uncorrectable error recovery detected for [PhysicalMemoryElementName] on Subsystem [MemoryElementName].

Explanation: This message is for the use case when an implementation has detected a Memory uncorrectable error recovery.

May also be shown as 816f010c2020ffff or 0x816f010c2020ffff

Severity: Info

Alert Category: Critical - Memory

Serviceable: No

CIM Information: **Prefix:** PLAT and **ID:** 0139

SNMP Trap ID: 41

Automatically notify Support: No

User response: This is a UEFI detected event. The UEFI diagnostic code for this event can be found in the logged IMM message text. Please refer to the UEFI diagnostic code in the "UEFI diagnostic code" section of the Information Center for the appropriate user response.

816f010c-2021ffff Uncorrectable error recovery detected for [PhysicalMemoryElementName] on Subsystem [MemoryElementName].

Explanation: This message is for the use case when an implementation has detected a Memory uncorrectable error recovery.

May also be shown as 816f010c2021ffff or 0x816f010c2021ffff

Severity: Info

Alert Category: Critical - Memory

Serviceable: No

CIM Information: **Prefix:** PLAT and **ID:** 0139

SNMP Trap ID: 41

Automatically notify Support: No

User response: This is a UEFI detected event. The UEFI diagnostic code for this event can be found in the logged IMM message text. Please refer to the UEFI diagnostic code in the "UEFI diagnostic code" section of the Information Center for the appropriate user response.

816f010c-2022ffff Uncorrectable error recovery detected for [PhysicalMemoryElementName] on Subsystem [MemoryElementName].

Explanation: This message is for the use case when an implementation has detected a Memory uncorrectable error recovery.

May also be shown as 816f010c2022ffff or 0x816f010c2022ffff

Severity: Info

Alert Category: Critical - Memory

Serviceable: No

CIM Information: **Prefix:** PLAT and **ID:** 0139

SNMP Trap ID: 41

Automatically notify Support: No

User response: This is a UEFI detected event. The UEFI diagnostic code for this event can be found in the logged IMM message text. Please refer to the UEFI diagnostic code in the "UEFI diagnostic code" section of the Information Center for the appropriate user response.

816f010c-2023ffff Uncorrectable error recovery detected for [PhysicalMemoryElementName] on Subsystem [MemoryElementName].

Explanation: This message is for the use case when an implementation has detected a Memory uncorrectable error recovery.

May also be shown as 816f010c2023ffff or 0x816f010c2023ffff

Severity: Info

Alert Category: Critical - Memory

Serviceable: No

CIM Information: **Prefix:** PLAT and **ID:** 0139

SNMP Trap ID: 41

Automatically notify Support: No

User response: This is a UEFI detected event. The UEFI diagnostic code for this event can be found in the logged IMM message text. Please refer to the UEFI diagnostic code in the "UEFI diagnostic code" section of the Information Center for the appropriate user response.

816f010c-2024ffff Uncorrectable error recovery detected for [PhysicalMemoryElementName] on Subsystem [MemoryElementName].

Explanation: This message is for the use case when an implementation has detected a Memory uncorrectable error recovery.

May also be shown as 816f010c2024ffff or 0x816f010c2024ffff

Severity: Info

Alert Category: Critical - Memory

Serviceable: No

CIM Information: **Prefix:** PLAT and **ID:** 0139

SNMP Trap ID: 41

Automatically notify Support: No

User response: This is a UEFI detected event. The UEFI diagnostic code for this event can be found in the logged IMM message text. Please refer to the UEFI diagnostic code in the "UEFI diagnostic code" section of the Information Center for the appropriate user response.

816f010c-2025ffff Uncorrectable error recovery detected for [PhysicalMemoryElementName] on Subsystem [MemoryElementName].

Explanation: This message is for the use case when an implementation has detected a Memory uncorrectable error recovery.

May also be shown as 816f010c2025ffff or 0x816f010c2025ffff

Severity: Info

Alert Category: Critical - Memory

Serviceable: No

CIM Information: **Prefix:** PLAT and **ID:** 0139

SNMP Trap ID: 41

Automatically notify Support: No

User response: This is a UEFI detected event. The UEFI diagnostic code for this event can be found in the logged IMM message text. Please refer to the UEFI diagnostic code in the "UEFI diagnostic code" section of the Information Center for the appropriate user response.

816f010c-2026ffff Uncorrectable error recovery detected for [PhysicalMemoryElementName] on Subsystem [MemoryElementName].

Explanation: This message is for the use case when an implementation has detected a Memory uncorrectable error recovery.

May also be shown as 816f010c2026ffff or 0x816f010c2026ffff

Severity: Info

Alert Category: Critical - Memory

Serviceable: No

CIM Information: **Prefix:** PLAT and **ID:** 0139

SNMP Trap ID: 41

Automatically notify Support: No

User response: This is a UEFI detected event. The UEFI diagnostic code for this event can be found in the logged IMM message text. Please refer to the UEFI diagnostic code in the "UEFI diagnostic code" section of the Information Center for the appropriate user response.

816f010c-2027ffff Uncorrectable error recovery detected for [PhysicalMemoryElementName] on Subsystem [MemoryElementName].

Explanation: This message is for the use case when an implementation has detected a Memory uncorrectable error recovery.

May also be shown as 816f010c2027ffff or 0x816f010c2027ffff

Severity: Info

Alert Category: Critical - Memory

Serviceable: No

CIM Information: **Prefix:** PLAT and **ID:** 0139

SNMP Trap ID: 41

Automatically notify Support: No

User response: This is a UEFI detected event. The UEFI diagnostic code for this event can be found in the logged IMM message text. Please refer to the UEFI diagnostic code in the "UEFI diagnostic code" section of the Information Center for the appropriate user response.

816f010c-2028ffff Uncorrectable error recovery detected for [PhysicalMemoryElementName] on Subsystem [MemoryElementName].

Explanation: This message is for the use case when an implementation has detected a Memory uncorrectable error recovery.

May also be shown as 816f010c2028ffff or 0x816f010c2028ffff

Severity: Info

Alert Category: Critical - Memory

Serviceable: No

CIM Information: **Prefix:** PLAT and **ID:** 0139

SNMP Trap ID: 41

Automatically notify Support: No

User response: This is a UEFI detected event. The UEFI diagnostic code for this event can be found in the logged IMM message text. Please refer to the UEFI diagnostic code in the "UEFI diagnostic code" section of the Information Center for the appropriate user response.

816f010c-2029ffff Uncorrectable error recovery detected for [PhysicalMemoryElementName] on Subsystem [MemoryElementName].

Explanation: This message is for the use case when an implementation has detected a Memory uncorrectable error recovery.

May also be shown as 816f010c2029ffff or 0x816f010c2029ffff

Severity: Info

Alert Category: Critical - Memory

Serviceable: No

CIM Information: **Prefix:** PLAT and **ID:** 0139

SNMP Trap ID: 41

Automatically notify Support: No

User response: This is a UEFI detected event. The UEFI diagnostic code for this event can be found in the logged IMM message text. Please refer to the UEFI diagnostic code in the "UEFI diagnostic code" section of the Information Center for the appropriate user response.

816f010c-202affff Uncorrectable error recovery detected for [PhysicalMemoryElementName] on Subsystem [MemoryElementName].

Explanation: This message is for the use case when an implementation has detected a Memory uncorrectable error recovery.

May also be shown as 816f010c202affff or 0x816f010c202affff

Severity: Info

Alert Category: Critical - Memory

Serviceable: No

CIM Information: **Prefix:** PLAT and **ID:** 0139

SNMP Trap ID: 41

Automatically notify Support: No

User response: This is a UEFI detected event. The UEFI diagnostic code for this event can be found in the logged IMM message text. Please refer to the UEFI diagnostic code in the "UEFI diagnostic code" section of the Information Center for the appropriate user response.

816f010c-202bffff Uncorrectable error recovery detected for [PhysicalMemoryElementName] on Subsystem [MemoryElementName].

Explanation: This message is for the use case when an implementation has detected a Memory uncorrectable error recovery.

May also be shown as 816f010c202bffff or 0x816f010c202bffff

Severity: Info

Alert Category: Critical - Memory

Serviceable: No

CIM Information: **Prefix:** PLAT and **ID:** 0139

SNMP Trap ID: 41

Automatically notify Support: No

User response: This is a UEFI detected event. The UEFI diagnostic code for this event can be found in the logged IMM message text. Please refer to the UEFI diagnostic code in the "UEFI diagnostic code" section of the Information Center for the appropriate user response.

816f010c-202cffff Uncorrectable error recovery detected for [PhysicalMemoryElementName] on Subsystem [MemoryElementName].

Explanation: This message is for the use case when an implementation has detected a Memory uncorrectable error recovery.

May also be shown as 816f010c202cffff or 0x816f010c202cffff

Severity: Info

Alert Category: Critical - Memory

Serviceable: No

CIM Information: **Prefix:** PLAT and **ID:** 0139

SNMP Trap ID: 41

Automatically notify Support: No

User response: This is a UEFI detected event. The UEFI diagnostic code for this event can be found in the logged IMM message text. Please refer to the UEFI diagnostic code in the "UEFI diagnostic code" section of the Information Center for the appropriate user response.

816f010c-202dffff Uncorrectable error recovery detected for [PhysicalMemoryElementName] on Subsystem [MemoryElementName].

Explanation: This message is for the use case when an implementation has detected a Memory uncorrectable error recovery.

May also be shown as 816f010c202dffff or 0x816f010c202dffff

Severity: Info

Alert Category: Critical - Memory

Serviceable: No

CIM Information: **Prefix:** PLAT and **ID:** 0139

SNMP Trap ID: 41

Automatically notify Support: No

User response: This is a UEFI detected event. The UEFI diagnostic code for this event can be found in the logged IMM message text. Please refer to the UEFI diagnostic code in the "UEFI diagnostic code" section of the Information Center for the appropriate user response.

816f010c-202effff Uncorrectable error recovery detected for [PhysicalMemoryElementName] on Subsystem [MemoryElementName].

Explanation: This message is for the use case when an implementation has detected a Memory uncorrectable error recovery.

May also be shown as 816f010c202effff or 0x816f010c202effff

Severity: Info

Alert Category: Critical - Memory

Serviceable: No

CIM Information: **Prefix:** PLAT and **ID:** 0139

SNMP Trap ID: 41

Automatically notify Support: No

User response: This is a UEFI detected event. The UEFI diagnostic code for this event can be found in the logged IMM message text. Please refer to the UEFI diagnostic code in the "UEFI diagnostic code" section of the Information Center for the appropriate user response.

816f010c-202fffff Uncorrectable error recovery detected for [PhysicalMemoryElementName] on Subsystem [MemoryElementName].

Explanation: This message is for the use case when an implementation has detected a Memory uncorrectable error recovery.

May also be shown as 816f010c202fffff or 0x816f010c202fffff

Severity: Info

Alert Category: Critical - Memory

Serviceable: No

CIM Information: **Prefix:** PLAT and **ID:** 0139

SNMP Trap ID: 41

Automatically notify Support: No

User response: This is a UEFI detected event. The UEFI diagnostic code for this event can be found in the logged IMM message text. Please refer to the UEFI diagnostic code in the "UEFI diagnostic code" section of the Information Center for the appropriate user response.

816f010c-2030ffff Uncorrectable error recovery detected for [PhysicalMemoryElementName] on Subsystem [MemoryElementName].

Explanation: This message is for the use case when an implementation has detected a Memory uncorrectable error recovery.

May also be shown as 816f010c2030ffff or 0x816f010c2030ffff

Severity: Info

Alert Category: Critical - Memory

Serviceable: No

CIM Information: **Prefix:** PLAT and **ID:** 0139

SNMP Trap ID: 41

Automatically notify Support: No

User response: This is a UEFI detected event. The UEFI diagnostic code for this event can be found in the logged IMM message text. Please refer to the UEFI diagnostic code in the "UEFI diagnostic code" section of the Information Center for the appropriate user response.

816f010c-2581ffff Uncorrectable error recovery detected for [PhysicalMemoryElementName] on Subsystem [MemoryElementName].

Explanation: This message is for the use case when an implementation has detected a Memory uncorrectable error recovery. All DIMMs. One of the DIMMs.

May also be shown as 816f010c2581ffff or 0x816f010c2581ffff

Severity: Info

Alert Category: Critical - Memory

Serviceable: No

CIM Information: **Prefix:** PLAT and **ID:** 0139

SNMP Trap ID: 41

Automatically notify Support: No

User response: This is a UEFI detected event. The UEFI diagnostic code for this event can be found in the logged IMM message text. Please refer to the UEFI diagnostic code in the "UEFI diagnostic code" section of the Information Center for the appropriate user response.

816f010d-0400ffff The Drive [StorageVolumeElementName] has been enabled.

Explanation: The previously disabled drive 0 has been enabled.

May also be shown as 816f010d0400ffff or 0x816f010d0400ffff

Severity: Info

Alert Category: Critical - Hard Disk drive

Serviceable: No

CIM Information: **Prefix:** PLAT and **ID:** 0167

SNMP Trap ID: 5

Automatically notify Support: No

User response: Information only; no action is required.

816f010d-0401ffff The Drive [StorageVolumeElementName] has been enabled.

Explanation: The previously disabled drive 1 has been enabled.

May also be shown as 816f010d0401ffff or 0x816f010d0401ffff

Severity: Info

Alert Category: Critical - Hard Disk drive

Serviceable: No

CIM Information: **Prefix:** PLAT and **ID:** 0167

SNMP Trap ID: 5

Automatically notify Support: No

User response: Information only; no action is required.

816f010d-0402ffff The Drive [StorageVolumeElementName] has been enabled.

Explanation: The previously disabled drive 2 has been enabled.

May also be shown as 816f010d0402ffff or 0x816f010d0402ffff

Severity: Info

Alert Category: Critical - Hard Disk drive

Serviceable: No

CIM Information: **Prefix:** PLAT and **ID:** 0167

SNMP Trap ID: 5

Automatically notify Support: No

User response: Information only; no action is required.

816f010d-0403ffff The Drive [StorageVolumeElementName] has been enabled.

Explanation: The previously disabled drive 3 has been enabled.

May also be shown as 816f010d0403ffff or 0x816f010d0403ffff

Severity: Info

Alert Category: Critical - Hard Disk drive

Serviceable: No

CIM Information: **Prefix:** PLAT and **ID:** 0167

SNMP Trap ID: 5

Automatically notify Support: No

User response: Information only; no action is required.

816f010d-0404ffff The Drive [StorageVolumeElementName] has been enabled.

Explanation: The previously disabled drive 4 has been enabled.

May also be shown as 816f010d0404ffff or 0x816f010d0404ffff

Severity: Info

Alert Category: Critical - Hard Disk drive

Serviceable: No

CIM Information: **Prefix:** PLAT and **ID:** 0167

SNMP Trap ID: 5

Automatically notify Support: No

User response: Information only; no action is required.

816f010d-0405ffff The Drive [StorageVolumeElementName] has been enabled.

Explanation: The previously disabled drive 5 has been enabled.

May also be shown as 816f010d0405ffff or 0x816f010d0405ffff

Severity: Info

Alert Category: Critical - Hard Disk drive

Serviceable: No

CIM Information: **Prefix:** PLAT and **ID:** 0167

SNMP Trap ID: 5

Automatically notify Support: No

User response: Information only; no action is required.

816f010d-0406ffff The Drive [StorageVolumeElementName] has been enabled.

Explanation: The previously disabled drive 6 has been enabled.

May also be shown as 816f010d0406ffff or 0x816f010d0406ffff

Severity: Info

Alert Category: Critical - Hard Disk drive

Serviceable: No

CIM Information: **Prefix:** PLAT and **ID:** 0167

SNMP Trap ID: 5

Automatically notify Support: No

User response: Information only; no action is required.

816f010d-0407ffff The Drive [StorageVolumeElementName] has been enabled.

Explanation: The previously disabled drive 7 has been enabled.

May also be shown as 816f010d0407ffff or 0x816f010d0407ffff

Severity: Info

Alert Category: Critical - Hard Disk drive

Serviceable: No

CIM Information: **Prefix:** PLAT and **ID:** 0167

SNMP Trap ID: 5

Automatically notify Support: No

User response: Information only; no action is required.

816f010f-2201ffff The System [ComputerSystemElementName] has recovered from a firmware hang.

Explanation: This message is for the use case when an implementation has recovered from a System Firmware Hang.

May also be shown as 816f010f2201ffff or 0x816f010f2201ffff

Severity: Info

Alert Category: Critical - Other

Serviceable: No

CIM Information: **Prefix:** PLAT and **ID:** 0187

SNMP Trap ID: 50

Automatically notify Support: No

User response: This is a UEFI detected event. The UEFI diagnostic code for this event can be found in the logged IMM message text. Please refer to the UEFI diagnostic code in the "UEFI diagnostic code" section of the Information Center for the appropriate user response.

816f0207-0301ffff [ProcessorElementName] has Recovered from FRB1/BIST condition.

Explanation: This message is for the use case when an implementation has detected a Processor Recovered - FRB1/BIST condition.

May also be shown as 816f02070301ffff or 0x816f02070301ffff

Severity: Info

Alert Category: Critical - CPU

Serviceable: No

CIM Information: **Prefix:** PLAT and **ID:** 0045

SNMP Trap ID: 40

Automatically notify Support: No

User response: This is a UEFI detected event. The UEFI diagnostic code for this event can be found in the logged IMM message text. Please refer to the UEFI diagnostic code in the "UEFI diagnostic code" section of the Information Center for the appropriate user response.

816f0207-0302ffff [ProcessorElementName] has Recovered from FRB1/BIST condition.

Explanation: This message is for the use case when an implementation has detected a Processor Recovered - FRB1/BIST condition.

May also be shown as 816f02070302ffff or 0x816f02070302ffff

Severity: Info

Alert Category: Critical - CPU

Serviceable: No

CIM Information: **Prefix:** PLAT and **ID:** 0045

SNMP Trap ID: 40

Automatically notify Support: No

User response: This is a UEFI detected event. The UEFI diagnostic code for this event can be found in the logged IMM message text. Please refer to the UEFI diagnostic code in the "UEFI diagnostic code" section of the Information Center for the appropriate user response.

816f0207-0303ffff [ProcessorElementName] has Recovered from FRB1/BIST condition.

Explanation: This message is for the use case when an implementation has detected a Processor Recovered - FRB1/BIST condition.

May also be shown as 816f02070303ffff or 0x816f02070303ffff

Severity: Info

Alert Category: Critical - CPU

Serviceable: No

CIM Information: **Prefix:** PLAT and **ID:** 0045

SNMP Trap ID: 40

Automatically notify Support: No

User response: This is a UEFI detected event. The UEFI diagnostic code for this event can be found in the logged IMM message text. Please refer to the UEFI diagnostic code in the "UEFI diagnostic code" section of the Information Center for the appropriate user response.

816f0207-0304ffff [ProcessorElementName] has Recovered from FRB1/BIST condition.

Explanation: This message is for the use case when an implementation has detected a Processor Recovered - FRB1/BIST condition.

May also be shown as 816f02070304ffff or 0x816f02070304ffff

Severity: Info

Alert Category: Critical - CPU

Serviceable: No

CIM Information: **Prefix:** PLAT and **ID:** 0045

SNMP Trap ID: 40

Automatically notify Support: No

User response: This is a UEFI detected event. The UEFI diagnostic code for this event can be found in the logged IMM message text. Please refer to the UEFI diagnostic code in the "UEFI diagnostic code" section of the Information Center for the appropriate user response.

816f0207-2584ffff [ProcessorElementName] has Recovered from FRB1/BIST condition.

Explanation: This message is for the use case when an implementation has detected a Processor Recovered - FRB1/BIST condition. All CPUs. One of CPUs.

May also be shown as 816f02072584ffff or 0x816f02072584ffff

Severity: Info

Alert Category: Critical - CPU

Serviceable: No

CIM Information: **Prefix:** PLAT and **ID:** 0045

SNMP Trap ID: 40

Automatically notify Support: No

User response: This is a UEFI detected event. The UEFI diagnostic code for this event can be found in the logged IMM message text. Please refer to the UEFI diagnostic code in the "UEFI diagnostic code" section of the Information Center for the appropriate user response.

816f020d-0400ffff Failure no longer Predicted on drive [StorageVolumeElementName] for array [ComputerSystemElementName].

Explanation: The predicted failure for Drive 0 no longer exists.

May also be shown as 816f020d0400ffff or 0x816f020d0400ffff

Severity: Info

Alert Category: System - Predicted Failure

Serviceable: No

CIM Information: **Prefix:** PLAT and **ID:** 0169

SNMP Trap ID: 27

Automatically notify Support: No

User response: Information only; no action is required.

816f020d-0401ffff Failure no longer Predicted on drive [StorageVolumeElementName] for array [ComputerSystemElementName].

Explanation: The predicted failure for Drive 1 no longer exists.

May also be shown as 816f020d0401ffff or 0x816f020d0401ffff

Severity: Info

Alert Category: System - Predicted Failure

Serviceable: No

CIM Information: **Prefix:** PLAT and **ID:** 0169

SNMP Trap ID: 27

Automatically notify Support: No

User response: Information only; no action is required.

816f020d-0402ffff Failure no longer Predicted on drive [StorageVolumeElementName] for array [ComputerSystemElementName].

Explanation: The predicted failure for Drive 2 no longer exists.

May also be shown as 816f020d0402ffff or 0x816f020d0402ffff

Severity: Info

Alert Category: System - Predicted Failure

Serviceable: No

CIM Information: **Prefix:** PLAT and **ID:** 0169

SNMP Trap ID: 27

Automatically notify Support: No

User response: Information only; no action is required.

816f020d-0403ffff Failure no longer Predicted on drive [StorageVolumeElementName] for array [ComputerSystemElementName].

Explanation: The predicted failure for Drive 3 no longer exists.

May also be shown as 816f020d0403ffff or 0x816f020d0403ffff

Severity: Info

Alert Category: System - Predicted Failure

Serviceable: No

CIM Information: **Prefix:** PLAT and **ID:** 0169

SNMP Trap ID: 27

Automatically notify Support: No

User response: Information only; no action is required.

816f020d-0404ffff Failure no longer Predicted on drive [StorageVolumeElementName] for array [ComputerSystemElementName].

Explanation: The predicted failure for Drive 4 no longer exists.

May also be shown as 816f020d0404ffff or 0x816f020d0404ffff

Severity: Info

Alert Category: System - Predicted Failure

Serviceable: No

CIM Information: **Prefix:** PLAT and **ID:** 0169

SNMP Trap ID: 27

Automatically notify Support: No

User response: Information only; no action is required.

816f020d-0405ffff Failure no longer Predicted on drive [StorageVolumeElementName] for array [ComputerSystemElementName].

Explanation: The predicted failure for Drive 5 no longer exists.

May also be shown as 816f020d0405ffff or 0x816f020d0405ffff

Severity: Info

Alert Category: System - Predicted Failure

Serviceable: No

CIM Information: **Prefix:** PLAT and **ID:** 0169

SNMP Trap ID: 27

Automatically notify Support: No

User response: Information only; no action is required.

816f020d-0406ffff Failure no longer Predicted on drive [StorageVolumeElementName] for array [ComputerSystemElementName].

Explanation: The predicted failure for Drive 6 no longer exists.

May also be shown as 816f020d0406ffff or 0x816f020d0406ffff

Severity: Info

Alert Category: System - Predicted Failure

Serviceable: No

CIM Information: **Prefix:** PLAT and **ID:** 0169

SNMP Trap ID: 27

Automatically notify Support: No

User response: Information only; no action is required.

816f020d-0407ffff Failure no longer Predicted on drive [StorageVolumeElementName] for array [ComputerSystemElementName].

Explanation: The predicted failure for Drive 7 no longer exists.

May also be shown as 816f020d0407ffff or 0x816f020d0407ffff

Severity: Info

Alert Category: System - Predicted Failure

Serviceable: No

CIM Information: **Prefix:** PLAT and **ID:** 0169

SNMP Trap ID: 27

Automatically notify Support: No

User response: Information only; no action is required.

816f0225-1f05ffff LOM1 has been enabled.

Explanation: This message indicates the LAN On Motherboard (LOM) 1 is enabled.

May also be shown as 816f02251f05ffff or 0x816f02251f05ffff

Severity: Info

Alert Category: System - Other

Serviceable: No

CIM Information: **Prefix:** PLAT and **ID:** 0395

SNMP Trap ID:

Automatically notify Support: No

User response: Information only; no action is required.

816f0225-1f06ffff LOM2 has been enabled.

Explanation: This message indicates the LAN On Motherboard (LOM) 2 is enabled.

May also be shown as 816f02251f06ffff or 0x816f02251f06ffff

Severity: Info

Alert Category: System - Other

Serviceable: No

CIM Information: **Prefix:** PLAT and **ID:** 0395

SNMP Trap ID:

Automatically notify Support: No

User response: Information only; no action is required.

816f030c-2001ffff Scrub Failure for [PhysicalMemoryElementName] on Subsystem [MemoryElementName] has recovered.

Explanation: A Memory Scrub failure detected during boot has recovered.

May also be shown as 816f030c2001ffff or 0x816f030c2001ffff

Severity: Info

Alert Category: Critical - Memory

Serviceable: No

CIM Information: **Prefix:** PLAT and **ID:** 0137

SNMP Trap ID: 41

Automatically notify Support: No

User response: Information only; no action is required.

816f030c-2002ffff Scrub Failure for [PhysicalMemoryElementName] on Subsystem [MemoryElementName] has recovered.

Explanation: A Memory Scrub failure detected during boot has recovered.

May also be shown as 816f030c2002ffff or 0x816f030c2002ffff

Severity: Info

Alert Category: Critical - Memory

Serviceable: No

CIM Information: **Prefix:** PLAT and **ID:** 0137

SNMP Trap ID: 41

Automatically notify Support: No

User response: Information only; no action is required.

816f030c-2003ffff Scrub Failure for [PhysicalMemoryElementName] on Subsystem [MemoryElementName] has recovered.

Explanation: A Memory Scrub failure detected during boot has recovered.

May also be shown as 816f030c2003ffff or 0x816f030c2003ffff

Severity: Info

Alert Category: Critical - Memory

Serviceable: No

CIM Information: **Prefix:** PLAT and **ID:** 0137

SNMP Trap ID: 41

Automatically notify Support: No

User response: Information only; no action is required.

816f030c-2004ffff Scrub Failure for [PhysicalMemoryElementName] on Subsystem [MemoryElementName] has recovered.

Explanation: A Memory Scrub failure detected during boot has recovered.

May also be shown as 816f030c2004ffff or 0x816f030c2004ffff

Severity: Info

Alert Category: Critical - Memory

Serviceable: No

CIM Information: **Prefix:** PLAT and **ID:** 0137

SNMP Trap ID: 41

Automatically notify Support: No

User response: Information only; no action is required.

816f030c-2005ffff Scrub Failure for [PhysicalMemoryElementName] on Subsystem [MemoryElementName] has recovered.

Explanation: A Memory Scrub failure detected during boot has recovered.

May also be shown as 816f030c2005ffff or 0x816f030c2005ffff

Severity: Info

Alert Category: Critical - Memory

Serviceable: No

CIM Information: **Prefix:** PLAT and **ID:** 0137

SNMP Trap ID: 41

Automatically notify Support: No

User response: Information only; no action is required.

816f030c-2006ffff Scrub Failure for [PhysicalMemoryElementName] on Subsystem [MemoryElementName] has recovered.

Explanation: A Memory Scrub failure detected during boot has recovered.

May also be shown as 816f030c2006ffff or 0x816f030c2006ffff

Severity: Info

Alert Category: Critical - Memory

Serviceable: No

CIM Information: **Prefix:** PLAT and **ID:** 0137

SNMP Trap ID: 41

Automatically notify Support: No

User response: Information only; no action is required.

816f030c-2007ffff Scrub Failure for [PhysicalMemoryElementName] on Subsystem [MemoryElementName] has recovered.

Explanation: A Memory Scrub failure detected during boot has recovered.

May also be shown as 816f030c2007ffff or 0x816f030c2007ffff

Severity: Info

Alert Category: Critical - Memory

Serviceable: No

CIM Information: **Prefix:** PLAT and **ID:** 0137

SNMP Trap ID: 41

Automatically notify Support: No

User response: Information only; no action is required.

816f030c-2008ffff Scrub Failure for [PhysicalMemoryElementName] on Subsystem [MemoryElementName] has recovered.

Explanation: A Memory Scrub failure detected during boot has recovered.

May also be shown as 816f030c2008ffff or 0x816f030c2008ffff

Severity: Info

Alert Category: Critical - Memory

Serviceable: No

CIM Information: **Prefix:** PLAT and **ID:** 0137

SNMP Trap ID: 41

Automatically notify Support: No

User response: Information only; no action is required.

816f030c-2009ffff Scrub Failure for [PhysicalMemoryElementName] on Subsystem [MemoryElementName] has recovered.

Explanation: A Memory Scrub failure detected during boot has recovered.

May also be shown as 816f030c2009ffff or 0x816f030c2009ffff

Severity: Info

Alert Category: Critical - Memory

Serviceable: No

CIM Information: **Prefix:** PLAT and **ID:** 0137

SNMP Trap ID: 41

Automatically notify Support: No

User response: Information only; no action is required.

816f030c-200affff Scrub Failure for [PhysicalMemoryElementName] on Subsystem [MemoryElementName] has recovered.

Explanation: A Memory Scrub failure detected during boot has recovered.

May also be shown as 816f030c200affff or 0x816f030c200affff

Severity: Info

Alert Category: Critical - Memory

Serviceable: No

CIM Information: **Prefix:** PLAT and **ID:** 0137

SNMP Trap ID: 41

Automatically notify Support: No

User response: Information only; no action is required.

816f030c-200bffff Scrub Failure for [PhysicalMemoryElementName] on Subsystem [MemoryElementName] has recovered.

Explanation: A Memory Scrub failure detected during boot has recovered.

May also be shown as 816f030c200bffff or 0x816f030c200bffff

Severity: Info

Alert Category: Critical - Memory

Serviceable: No

CIM Information: **Prefix:** PLAT and **ID:** 0137

SNMP Trap ID: 41

Automatically notify Support: No

User response: Information only; no action is required.

816f030c-200cffff Scrub Failure for [PhysicalMemoryElementName] on Subsystem [MemoryElementName] has recovered.

Explanation: A Memory Scrub failure detected during boot has recovered.

May also be shown as 816f030c200cffff or 0x816f030c200cffff

Severity: Info

Alert Category: Critical - Memory

Serviceable: No

CIM Information: **Prefix:** PLAT and **ID:** 0137

SNMP Trap ID: 41

Automatically notify Support: No

User response: Information only; no action is required.

816f030c-200dffff Scrub Failure for [PhysicalMemoryElementName] on Subsystem [MemoryElementName] has recovered.

Explanation: A Memory Scrub failure detected during boot has recovered.

May also be shown as 816f030c200dffff or 0x816f030c200dffff

Severity: Info

Alert Category: Critical - Memory

Serviceable: No

CIM Information: **Prefix:** PLAT and **ID:** 0137

SNMP Trap ID: 41

Automatically notify Support: No

User response: Information only; no action is required.

816f030c-200effff Scrub Failure for [PhysicalMemoryElementName] on Subsystem [MemoryElementName] has recovered.

Explanation: A Memory Scrub failure detected during boot has recovered.

May also be shown as 816f030c200effff or 0x816f030c200effff

Severity: Info

Alert Category: Critical - Memory

Serviceable: No

CIM Information: **Prefix:** PLAT and **ID:** 0137

SNMP Trap ID: 41

Automatically notify Support: No

User response: Information only; no action is required.

816f030c-200fffff Scrub Failure for [PhysicalMemoryElementName] on Subsystem [MemoryElementName] has recovered.

Explanation: A Memory Scrub failure detected during boot has recovered.

May also be shown as 816f030c200fffff or 0x816f030c200fffff

Severity: Info

Alert Category: Critical - Memory

Serviceable: No

CIM Information: **Prefix:** PLAT and **ID:** 0137

SNMP Trap ID: 41

Automatically notify Support: No

User response: Information only; no action is required.

816f030c-2010ffff Scrub Failure for [PhysicalMemoryElementName] on Subsystem [MemoryElementName] has recovered.

Explanation: A Memory Scrub failure detected during boot has recovered.

May also be shown as 816f030c2010ffff or 0x816f030c2010ffff

Severity: Info

Alert Category: Critical - Memory

Serviceable: No

CIM Information: **Prefix:** PLAT and **ID:** 0137

SNMP Trap ID: 41

Automatically notify Support: No

User response: Information only; no action is required.

816f030c-2011ffff Scrub Failure for [PhysicalMemoryElementName] on Subsystem [MemoryElementName] has recovered.

Explanation: A Memory Scrub failure detected during boot has recovered.

May also be shown as 816f030c2011ffff or 0x816f030c2011ffff

Severity: Info

Alert Category: Critical - Memory

Serviceable: No

CIM Information: **Prefix:** PLAT and **ID:** 0137

SNMP Trap ID: 41

Automatically notify Support: No

User response: Information only; no action is required.

816f030c-2012ffff Scrub Failure for [PhysicalMemoryElementName] on Subsystem [MemoryElementName] has recovered.

Explanation: A Memory Scrub failure detected during boot has recovered.

May also be shown as 816f030c2012ffff or 0x816f030c2012ffff

Severity: Info

Alert Category: Critical - Memory

Serviceable: No

CIM Information: **Prefix:** PLAT and **ID:** 0137

SNMP Trap ID: 41

Automatically notify Support: No

User response: Information only; no action is required.

816f030c-2013ffff Scrub Failure for [PhysicalMemoryElementName] on Subsystem [MemoryElementName] has recovered.

Explanation: A Memory Scrub failure detected during boot has recovered.

May also be shown as 816f030c2013ffff or 0x816f030c2013ffff

Severity: Info

Alert Category: Critical - Memory

Serviceable: No

CIM Information: **Prefix:** PLAT and **ID:** 0137

SNMP Trap ID: 41

Automatically notify Support: No

User response: Information only; no action is required.

816f030c-2014ffff Scrub Failure for [PhysicalMemoryElementName] on Subsystem [MemoryElementName] has recovered.

Explanation: A Memory Scrub failure detected during boot has recovered.

May also be shown as 816f030c2014ffff or 0x816f030c2014ffff

Severity: Info

Alert Category: Critical - Memory

Serviceable: No

CIM Information: **Prefix:** PLAT and **ID:** 0137

SNMP Trap ID: 41

Automatically notify Support: No

User response: Information only; no action is required.

816f030c-2015ffff Scrub Failure for [PhysicalMemoryElementName] on Subsystem [MemoryElementName] has recovered.

Explanation: A Memory Scrub failure detected during boot has recovered.

May also be shown as 816f030c2015ffff or 0x816f030c2015ffff

Severity: Info

Alert Category: Critical - Memory

Serviceable: No

CIM Information: **Prefix:** PLAT and **ID:** 0137

SNMP Trap ID: 41

Automatically notify Support: No

User response: Information only; no action is required.

816f030c-2016ffff Scrub Failure for [PhysicalMemoryElementName] on Subsystem [MemoryElementName] has recovered.

Explanation: A Memory Scrub failure detected during boot has recovered.

May also be shown as 816f030c2016ffff or 0x816f030c2016ffff

Severity: Info

Alert Category: Critical - Memory

Serviceable: No

CIM Information: **Prefix:** PLAT and **ID:** 0137

SNMP Trap ID: 41

Automatically notify Support: No

User response: Information only; no action is required.

816f030c-2017ffff Scrub Failure for [PhysicalMemoryElementName] on Subsystem [MemoryElementName] has recovered.

Explanation: A Memory Scrub failure detected during boot has recovered.

May also be shown as 816f030c2017ffff or 0x816f030c2017ffff

Severity: Info

Alert Category: Critical - Memory

Serviceable: No

CIM Information: **Prefix:** PLAT and **ID:** 0137

SNMP Trap ID: 41

Automatically notify Support: No

User response: Information only; no action is required.

816f030c-2018ffff Scrub Failure for [PhysicalMemoryElementName] on Subsystem [MemoryElementName] has recovered.

Explanation: A Memory Scrub failure detected during boot has recovered.

May also be shown as 816f030c2018ffff or 0x816f030c2018ffff

Severity: Info

Alert Category: Critical - Memory

Serviceable: No

CIM Information: **Prefix:** PLAT and **ID:** 0137

SNMP Trap ID: 41

Automatically notify Support: No

User response: Information only; no action is required.

816f030c-2019ffff Scrub Failure for [PhysicalMemoryElementName] on Subsystem [MemoryElementName] has recovered.

Explanation: A Memory Scrub failure detected during boot has recovered.

May also be shown as 816f030c2019ffff or 0x816f030c2019ffff

Severity: Info

Alert Category: Critical - Memory

Serviceable: No

CIM Information: **Prefix:** PLAT and **ID:** 0137

SNMP Trap ID: 41

Automatically notify Support: No

User response: Information only; no action is required.

816f030c-201affff Scrub Failure for [PhysicalMemoryElementName] on Subsystem [MemoryElementName] has recovered.

Explanation: A Memory Scrub failure detected during boot has recovered.

May also be shown as 816f030c201affff or 0x816f030c201affff

Severity: Info

Alert Category: Critical - Memory

Serviceable: No

CIM Information: **Prefix:** PLAT and **ID:** 0137

SNMP Trap ID: 41

Automatically notify Support: No

User response: Information only; no action is required.

816f030c-201bffff Scrub Failure for [PhysicalMemoryElementName] on Subsystem [MemoryElementName] has recovered.

Explanation: A Memory Scrub failure detected during boot has recovered.

May also be shown as 816f030c201bffff or 0x816f030c201bffff

Severity: Info

Alert Category: Critical - Memory

Serviceable: No

CIM Information: **Prefix:** PLAT and **ID:** 0137

SNMP Trap ID: 41

Automatically notify Support: No

User response: Information only; no action is required.

816f030c-201cffff Scrub Failure for [PhysicalMemoryElementName] on Subsystem [MemoryElementName] has recovered.

Explanation: A Memory Scrub failure detected during boot has recovered.

May also be shown as 816f030c201cffff or 0x816f030c201cffff

Severity: Info

Alert Category: Critical - Memory

Serviceable: No

CIM Information: **Prefix:** PLAT and **ID:** 0137

SNMP Trap ID: 41

Automatically notify Support: No

User response: Information only; no action is required.

816f030c-201dffff Scrub Failure for [PhysicalMemoryElementName] on Subsystem [MemoryElementName] has recovered.

Explanation: A Memory Scrub failure detected during boot has recovered.

May also be shown as 816f030c201dffff or 0x816f030c201dffff

Severity: Info

Alert Category: Critical - Memory

Serviceable: No

CIM Information: **Prefix:** PLAT and **ID:** 0137

SNMP Trap ID: 41

Automatically notify Support: No

User response: Information only; no action is required.

816f030c-201effff Scrub Failure for [PhysicalMemoryElementName] on Subsystem [MemoryElementName] has recovered.

Explanation: A Memory Scrub failure detected during boot has recovered.

May also be shown as 816f030c201effff or 0x816f030c201effff

Severity: Info

Alert Category: Critical - Memory

Serviceable: No

CIM Information: **Prefix:** PLAT and **ID:** 0137

SNMP Trap ID: 41

Automatically notify Support: No

User response: Information only; no action is required.

816f030c-201fffff Scrub Failure for [PhysicalMemoryElementName] on Subsystem [MemoryElementName] has recovered.

Explanation: A Memory Scrub failure detected during boot has recovered.

May also be shown as 816f030c201fffff or 0x816f030c201fffff

Severity: Info

Alert Category: Critical - Memory

Serviceable: No

CIM Information: **Prefix:** PLAT and **ID:** 0137

SNMP Trap ID: 41

Automatically notify Support: No

User response: Information only; no action is required.

816f030c-2020ffff Scrub Failure for [PhysicalMemoryElementName] on Subsystem [MemoryElementName] has recovered.

Explanation: A Memory Scrub failure detected during boot has recovered.

May also be shown as 816f030c2020ffff or 0x816f030c2020ffff

Severity: Info

Alert Category: Critical - Memory

Serviceable: No

CIM Information: **Prefix:** PLAT and **ID:** 0137

SNMP Trap ID: 41

Automatically notify Support: No

User response: Information only; no action is required.

816f030c-2021ffff Scrub Failure for [PhysicalMemoryElementName] on Subsystem [MemoryElementName] has recovered.

Explanation: A Memory Scrub failure detected during boot has recovered.

May also be shown as 816f030c2021ffff or 0x816f030c2021ffff

Severity: Info

Alert Category: Critical - Memory

Serviceable: No

CIM Information: **Prefix:** PLAT and **ID:** 0137

SNMP Trap ID: 41

Automatically notify Support: No

User response: Information only; no action is required.

816f030c-2022ffff Scrub Failure for [PhysicalMemoryElementName] on Subsystem [MemoryElementName] has recovered.

Explanation: A Memory Scrub failure detected during boot has recovered.

May also be shown as 816f030c2022ffff or 0x816f030c2022ffff

Severity: Info

Alert Category: Critical - Memory

Serviceable: No

CIM Information: **Prefix:** PLAT and **ID:** 0137

SNMP Trap ID: 41

Automatically notify Support: No

User response: Information only; no action is required.

816f030c-2023ffff Scrub Failure for [PhysicalMemoryElementName] on Subsystem [MemoryElementName] has recovered.

Explanation: A Memory Scrub failure detected during boot has recovered.

May also be shown as 816f030c2023ffff or 0x816f030c2023ffff

Severity: Info

Alert Category: Critical - Memory

Serviceable: No

CIM Information: **Prefix:** PLAT and **ID:** 0137

SNMP Trap ID: 41

Automatically notify Support: No

User response: Information only; no action is required.

816f030c-2024ffff Scrub Failure for [PhysicalMemoryElementName] on Subsystem [MemoryElementName] has recovered.

Explanation: A Memory Scrub failure detected during boot has recovered.

May also be shown as 816f030c2024ffff or 0x816f030c2024ffff

Severity: Info

Alert Category: Critical - Memory

Serviceable: No

CIM Information: **Prefix:** PLAT and **ID:** 0137

SNMP Trap ID: 41

Automatically notify Support: No

User response: Information only; no action is required.

816f030c-2025ffff Scrub Failure for [PhysicalMemoryElementName] on Subsystem [MemoryElementName] has recovered.

Explanation: A Memory Scrub failure detected during boot has recovered.

May also be shown as 816f030c2025ffff or 0x816f030c2025ffff

Severity: Info

Alert Category: Critical - Memory

Serviceable: No

CIM Information: **Prefix:** PLAT and **ID:** 0137

SNMP Trap ID: 41

Automatically notify Support: No

User response: Information only; no action is required.

816f030c-2026ffff Scrub Failure for [PhysicalMemoryElementName] on Subsystem [MemoryElementName] has recovered.

Explanation: A Memory Scrub failure detected during boot has recovered.

May also be shown as 816f030c2026ffff or 0x816f030c2026ffff

Severity: Info

Alert Category: Critical - Memory

Serviceable: No

CIM Information: **Prefix:** PLAT and **ID:** 0137

SNMP Trap ID: 41

Automatically notify Support: No

User response: Information only; no action is required.

816f030c-2027ffff Scrub Failure for [PhysicalMemoryElementName] on Subsystem [MemoryElementName] has recovered.

Explanation: A Memory Scrub failure detected during boot has recovered.

May also be shown as 816f030c2027ffff or 0x816f030c2027ffff

Severity: Info

Alert Category: Critical - Memory

Serviceable: No

CIM Information: **Prefix:** PLAT and **ID:** 0137

SNMP Trap ID: 41

Automatically notify Support: No

User response: Information only; no action is required.

816f030c-2028ffff Scrub Failure for [PhysicalMemoryElementName] on Subsystem [MemoryElementName] has recovered.

Explanation: A Memory Scrub failure detected during boot has recovered.

May also be shown as 816f030c2028ffff or 0x816f030c2028ffff

Severity: Info

Alert Category: Critical - Memory

Serviceable: No

CIM Information: **Prefix:** PLAT and **ID:** 0137

SNMP Trap ID: 41

Automatically notify Support: No

User response: Information only; no action is required.

816f030c-2029ffff Scrub Failure for [PhysicalMemoryElementName] on Subsystem [MemoryElementName] has recovered.

Explanation: A Memory Scrub failure detected during boot has recovered.

May also be shown as 816f030c2029ffff or 0x816f030c2029ffff

Severity: Info

Alert Category: Critical - Memory

Serviceable: No

CIM Information: **Prefix:** PLAT and **ID:** 0137

SNMP Trap ID: 41

Automatically notify Support: No

User response: Information only; no action is required.

816f030c-202affff Scrub Failure for [PhysicalMemoryElementName] on Subsystem [MemoryElementName] has recovered.

Explanation: A Memory Scrub failure detected during boot has recovered.

May also be shown as 816f030c202affff or 0x816f030c202affff

Severity: Info

Alert Category: Critical - Memory

Serviceable: No

CIM Information: **Prefix:** PLAT and **ID:** 0137

SNMP Trap ID: 41

Automatically notify Support: No

User response: Information only; no action is required.

816f030c-202bffff Scrub Failure for [PhysicalMemoryElementName] on Subsystem [MemoryElementName] has recovered.

Explanation: A Memory Scrub failure detected during boot has recovered.

May also be shown as 816f030c202bffff or 0x816f030c202bffff

Severity: Info

Alert Category: Critical - Memory

Serviceable: No

CIM Information: **Prefix:** PLAT and **ID:** 0137

SNMP Trap ID: 41

Automatically notify Support: No

User response: Information only; no action is required.

816f030c-202cffff Scrub Failure for [PhysicalMemoryElementName] on Subsystem [MemoryElementName] has recovered.

Explanation: A Memory Scrub failure detected during boot has recovered.

May also be shown as 816f030c202cffff or 0x816f030c202cffff

Severity: Info

Alert Category: Critical - Memory

Serviceable: No

CIM Information: **Prefix:** PLAT and **ID:** 0137

SNMP Trap ID: 41

Automatically notify Support: No

User response: Information only; no action is required.

816f030c-202dffff Scrub Failure for [PhysicalMemoryElementName] on Subsystem [MemoryElementName] has recovered.

Explanation: A Memory Scrub failure detected during boot has recovered.

May also be shown as 816f030c202dffff or 0x816f030c202dffff

Severity: Info

Alert Category: Critical - Memory

Serviceable: No

CIM Information: **Prefix:** PLAT and **ID:** 0137

SNMP Trap ID: 41

Automatically notify Support: No

User response: Information only; no action is required.

816f030c-202effff Scrub Failure for [PhysicalMemoryElementName] on Subsystem [MemoryElementName] has recovered.

Explanation: A Memory Scrub failure detected during boot has recovered.

May also be shown as 816f030c202effff or 0x816f030c202effff

Severity: Info

Alert Category: Critical - Memory

Serviceable: No

CIM Information: **Prefix:** PLAT and **ID:** 0137

SNMP Trap ID: 41

Automatically notify Support: No

User response: Information only; no action is required.

816f030c-202fffff Scrub Failure for [PhysicalMemoryElementName] on Subsystem [MemoryElementName] has recovered.

Explanation: A Memory Scrub failure detected during boot has recovered.

May also be shown as 816f030c202fffff or 0x816f030c202fffff

Severity: Info

Alert Category: Critical - Memory

Serviceable: No

CIM Information: **Prefix:** PLAT and **ID:** 0137

SNMP Trap ID: 41

Automatically notify Support: No

User response: Information only; no action is required.

816f030c-2030ffff Scrub Failure for [PhysicalMemoryElementName] on Subsystem [MemoryElementName] has recovered.

Explanation: A Memory Scrub failure detected during boot has recovered.

May also be shown as 816f030c2030ffff or 0x816f030c2030ffff

Severity: Info

Alert Category: Critical - Memory

Serviceable: No

CIM Information: **Prefix:** PLAT and **ID:** 0137

SNMP Trap ID: 41

Automatically notify Support: No

User response: Information only; no action is required.

816f030c-2581ffff Scrub Failure for [PhysicalMemoryElementName] on Subsystem [MemoryElementName] has recovered.

Explanation: A Memory Scrub failure detected during boot has recovered on All DIMMs or One of the DIMMs.

May also be shown as 816f030c2581ffff or 0x816f030c2581ffff

Severity: Info

Alert Category: Critical - Memory

Serviceable: No

CIM Information: **Prefix:** PLAT and **ID:** 0137

SNMP Trap ID: 41

Automatically notify Support: No

User response: Information only; no action is required.

816f0313-1701ffff System [ComputerSystemElementName] has recovered from an NMI.

Explanation: This message is for the use case when an implementation has detected a Software NMI has been Recovered from.

May also be shown as 816f03131701ffff or 0x816f03131701ffff

Severity: Info

Alert Category: Critical - Other

Serviceable: No

CIM Information: **Prefix:** PLAT and **ID:** 0230

SNMP Trap ID: 50

Automatically notify Support: No

User response: Information only; no action is required.

816f040c-2001ffff [PhysicalMemoryElementName] Enabled on Subsystem [MemoryElementName].

Explanation: This message is for the use case when an implementation has detected that Memory has been Enabled.

May also be shown as 816f040c2001ffff or 0x816f040c2001ffff

Severity: Info

Alert Category: System - Other

Serviceable: No

CIM Information: **Prefix:** PLAT and **ID:** 0130

SNMP Trap ID:

Automatically notify Support: No

User response: This is a UEFI detected event. The UEFI diagnostic code for this event can be found in the logged IMM message text. Please refer to the UEFI diagnostic code in the "UEFI diagnostic code" section of the Information Center for the appropriate user response.

816f040c-2002ffff [PhysicalMemoryElementName] Enabled on Subsystem [MemoryElementName].

Explanation: This message is for the use case when an implementation has detected that Memory has been Enabled.

May also be shown as 816f040c2002ffff or 0x816f040c2002ffff

Severity: Info

Alert Category: System - Other

Serviceable: No

CIM Information: **Prefix:** PLAT and **ID:** 0130

SNMP Trap ID:

Automatically notify Support: No

User response: This is a UEFI detected event. The UEFI diagnostic code for this event can be found in the logged IMM message text. Please refer to the UEFI diagnostic code in the "UEFI diagnostic code" section of the Information Center for the appropriate user response.

816f040c-2003ffff [PhysicalMemoryElementName] Enabled on Subsystem [MemoryElementName].

Explanation: This message is for the use case when an implementation has detected that Memory has been Enabled.

May also be shown as 816f040c2003ffff or 0x816f040c2003ffff

Severity: Info

Alert Category: System - Other

Serviceable: No

CIM Information: **Prefix:** PLAT and **ID:** 0130

SNMP Trap ID:

Automatically notify Support: No

User response: This is a UEFI detected event. The UEFI diagnostic code for this event can be found in the logged IMM message text. Please refer to the UEFI diagnostic code in the "UEFI diagnostic code" section of the Information Center for the appropriate user response.

816f040c-2004ffff [PhysicalMemoryElementName] Enabled on Subsystem [MemoryElementName].

Explanation: This message is for the use case when an implementation has detected that Memory has been Enabled.

May also be shown as 816f040c2004ffff or 0x816f040c2004ffff

Severity: Info

Alert Category: System - Other

Serviceable: No

CIM Information: **Prefix:** PLAT and **ID:** 0130

SNMP Trap ID:

Automatically notify Support: No

User response: This is a UEFI detected event. The UEFI diagnostic code for this event can be found in the logged IMM message text. Please refer to the UEFI diagnostic code in the "UEFI diagnostic code" section of the Information Center for the appropriate user response.

816f040c-2005ffff [PhysicalMemoryElementName] Enabled on Subsystem [MemoryElementName].

Explanation: This message is for the use case when an implementation has detected that Memory has been Enabled.

May also be shown as 816f040c2005ffff or 0x816f040c2005ffff

Severity: Info

Alert Category: System - Other

Serviceable: No

CIM Information: **Prefix:** PLAT and **ID:** 0130

SNMP Trap ID:

Automatically notify Support: No

User response: This is a UEFI detected event. The UEFI diagnostic code for this event can be found in the logged IMM message text. Please refer to the UEFI diagnostic code in the "UEFI diagnostic code" section of the Information Center for the appropriate user response.

816f040c-2006ffff [PhysicalMemoryElementName] Enabled on Subsystem [MemoryElementName].

Explanation: This message is for the use case when an implementation has detected that Memory has been Enabled.

May also be shown as 816f040c2006ffff or 0x816f040c2006ffff

Severity: Info

Alert Category: System - Other

Serviceable: No

CIM Information: **Prefix:** PLAT and **ID:** 0130

SNMP Trap ID:

Automatically notify Support: No

User response: This is a UEFI detected event. The UEFI diagnostic code for this event can be found in the logged IMM message text. Please refer to the UEFI diagnostic code in the "UEFI diagnostic code" section of the Information Center for the appropriate user response.

816f040c-2007ffff [PhysicalMemoryElementName] Enabled on Subsystem [MemoryElementName].

Explanation: This message is for the use case when an implementation has detected that Memory has been Enabled.

May also be shown as 816f040c2007ffff or 0x816f040c2007ffff

Severity: Info

Alert Category: System - Other

Serviceable: No

CIM Information: **Prefix:** PLAT and **ID:** 0130

SNMP Trap ID:

Automatically notify Support: No

User response: This is a UEFI detected event. The UEFI diagnostic code for this event can be found in the logged IMM message text. Please refer to the UEFI diagnostic code in the "UEFI diagnostic code" section of the Information Center for the appropriate user response.

816f040c-2008ffff [PhysicalMemoryElementName] Enabled on Subsystem [MemoryElementName].

Explanation: This message is for the use case when an implementation has detected that Memory has been Enabled.

May also be shown as 816f040c2008ffff or 0x816f040c2008ffff

Severity: Info

Alert Category: System - Other

Serviceable: No

CIM Information: **Prefix:** PLAT and **ID:** 0130

SNMP Trap ID:

Automatically notify Support: No

User response: This is a UEFI detected event. The UEFI diagnostic code for this event can be found in the logged IMM message text. Please refer to the UEFI diagnostic code in the "UEFI diagnostic code" section of the Information Center for the appropriate user response.

816f040c-2009ffff [PhysicalMemoryElementName] Enabled on Subsystem [MemoryElementName].

Explanation: This message is for the use case when an implementation has detected that Memory has been Enabled.

May also be shown as 816f040c2009ffff or 0x816f040c2009ffff

Severity: Info

Alert Category: System - Other

Serviceable: No

CIM Information: **Prefix:** PLAT and **ID:** 0130

SNMP Trap ID:

Automatically notify Support: No

User response: This is a UEFI detected event. The UEFI diagnostic code for this event can be found in the logged IMM message text. Please refer to the UEFI diagnostic code in the "UEFI diagnostic code" section of the Information Center for the appropriate user response.

816f040c-200affff [PhysicalMemoryElementName] Enabled on Subsystem [MemoryElementName].

Explanation: This message is for the use case when an implementation has detected that Memory has been Enabled.

May also be shown as 816f040c200affff or 0x816f040c200affff

Severity: Info

Alert Category: System - Other

Serviceable: No

CIM Information: **Prefix:** PLAT and **ID:** 0130

SNMP Trap ID:

Automatically notify Support: No

User response: This is a UEFI detected event. The UEFI diagnostic code for this event can be found in the logged IMM message text. Please refer to the UEFI diagnostic code in the "UEFI diagnostic code" section of the Information Center for the appropriate user response.

816f040c-200bffff [PhysicalMemoryElementName] Enabled on Subsystem [MemoryElementName].

Explanation: This message is for the use case when an implementation has detected that Memory has been Enabled.

May also be shown as 816f040c200bffff or 0x816f040c200bffff

Severity: Info

Alert Category: System - Other

Serviceable: No

CIM Information: **Prefix:** PLAT and **ID:** 0130

SNMP Trap ID:

Automatically notify Support: No

User response: This is a UEFI detected event. The UEFI diagnostic code for this event can be found in the logged IMM message text. Please refer to the UEFI diagnostic code in the "UEFI diagnostic code" section of the Information Center for the appropriate user response.

816f040c-200cffff [PhysicalMemoryElementName] Enabled on Subsystem [MemoryElementName].

Explanation: This message is for the use case when an implementation has detected that Memory has been Enabled.

May also be shown as 816f040c200cffff or 0x816f040c200cffff

Severity: Info

Alert Category: System - Other

Serviceable: No

CIM Information: **Prefix:** PLAT and **ID:** 0130

SNMP Trap ID:

Automatically notify Support: No

User response: This is a UEFI detected event. The UEFI diagnostic code for this event can be found in the logged IMM message text. Please refer to the UEFI diagnostic code in the "UEFI diagnostic code" section of the Information Center for the appropriate user response.

816f040c-200dffff [PhysicalMemoryElementName] Enabled on Subsystem [MemoryElementName].

Explanation: This message is for the use case when an implementation has detected that Memory has been Enabled.

May also be shown as 816f040c200dffff or 0x816f040c200dffff

Severity: Info

Alert Category: System - Other

Serviceable: No

CIM Information: **Prefix:** PLAT and **ID:** 0130

SNMP Trap ID:

Automatically notify Support: No

User response: This is a UEFI detected event. The UEFI diagnostic code for this event can be found in the logged IMM message text. Please refer to the UEFI diagnostic code in the "UEFI diagnostic code" section of the Information Center for the appropriate user response.

816f040c-200effff [PhysicalMemoryElementName] Enabled on Subsystem [MemoryElementName].

Explanation: This message is for the use case when an implementation has detected that Memory has been Enabled.

May also be shown as 816f040c200effff or 0x816f040c200effff

Severity: Info

Alert Category: System - Other

Serviceable: No

CIM Information: **Prefix:** PLAT and **ID:** 0130

SNMP Trap ID:

Automatically notify Support: No

User response: This is a UEFI detected event. The UEFI diagnostic code for this event can be found in the logged IMM message text. Please refer to the UEFI diagnostic code in the "UEFI diagnostic code" section of the Information Center for the appropriate user response.

816f040c-200fffff [PhysicalMemoryElementName] Enabled on Subsystem [MemoryElementName].

Explanation: This message is for the use case when an implementation has detected that Memory has been Enabled.

May also be shown as 816f040c200fffff or 0x816f040c200fffff

Severity: Info

Alert Category: System - Other

Serviceable: No

CIM Information: **Prefix:** PLAT and **ID:** 0130

SNMP Trap ID:

Automatically notify Support: No

User response: This is a UEFI detected event. The UEFI diagnostic code for this event can be found in the logged IMM message text. Please refer to the UEFI diagnostic code in the "UEFI diagnostic code" section of the Information Center for the appropriate user response.

816f040c-2010ffff [PhysicalMemoryElementName] Enabled on Subsystem [MemoryElementName].

Explanation: This message is for the use case when an implementation has detected that Memory has been Enabled.

May also be shown as 816f040c2010ffff or 0x816f040c2010ffff

Severity: Info

Alert Category: System - Other

Serviceable: No

CIM Information: **Prefix:** PLAT and **ID:** 0130

SNMP Trap ID:

Automatically notify Support: No

User response: This is a UEFI detected event. The UEFI diagnostic code for this event can be found in the logged IMM message text. Please refer to the UEFI diagnostic code in the "UEFI diagnostic code" section of the Information Center for the appropriate user response.

816f040c-2011ffff [PhysicalMemoryElementName] Enabled on Subsystem [MemoryElementName].

Explanation: This message is for the use case when an implementation has detected that Memory has been Enabled.

May also be shown as 816f040c2011ffff or 0x816f040c2011ffff

Severity: Info

Alert Category: System - Other

Serviceable: No

CIM Information: **Prefix:** PLAT and **ID:** 0130

SNMP Trap ID:

Automatically notify Support: No

User response: This is a UEFI detected event. The UEFI diagnostic code for this event can be found in the logged IMM message text. Please refer to the UEFI diagnostic code in the "UEFI diagnostic code" section of the Information Center for the appropriate user response.

816f040c-2012ffff [PhysicalMemoryElementName] Enabled on Subsystem [MemoryElementName].

Explanation: This message is for the use case when an implementation has detected that Memory has been Enabled.

May also be shown as 816f040c2012ffff or 0x816f040c2012ffff

Severity: Info

Alert Category: System - Other

Serviceable: No

CIM Information: **Prefix:** PLAT and **ID:** 0130

SNMP Trap ID:

Automatically notify Support: No

User response: This is a UEFI detected event. The UEFI diagnostic code for this event can be found in the logged IMM message text. Please refer to the UEFI diagnostic code in the "UEFI diagnostic code" section of the Information Center for the appropriate user response.

816f040c-2013ffff [PhysicalMemoryElementName] Enabled on Subsystem [MemoryElementName].

Explanation: This message is for the use case when an implementation has detected that Memory has been Enabled.

May also be shown as 816f040c2013ffff or 0x816f040c2013ffff

Severity: Info

Alert Category: System - Other

Serviceable: No

CIM Information: **Prefix:** PLAT and **ID:** 0130

SNMP Trap ID:

Automatically notify Support: No

User response: This is a UEFI detected event. The UEFI diagnostic code for this event can be found in the logged IMM message text. Please refer to the UEFI diagnostic code in the "UEFI diagnostic code" section of the Information Center for the appropriate user response.

816f040c-2014ffff [PhysicalMemoryElementName] Enabled on Subsystem [MemoryElementName].

Explanation: This message is for the use case when an implementation has detected that Memory has been Enabled.

May also be shown as 816f040c2014ffff or 0x816f040c2014ffff

Severity: Info

Alert Category: System - Other

Serviceable: No

CIM Information: **Prefix:** PLAT and **ID:** 0130

SNMP Trap ID:

Automatically notify Support: No

User response: This is a UEFI detected event. The UEFI diagnostic code for this event can be found in the logged IMM message text. Please refer to the UEFI diagnostic code in the "UEFI diagnostic code" section of the Information Center for the appropriate user response.

816f040c-2015ffff [PhysicalMemoryElementName] Enabled on Subsystem [MemoryElementName].

Explanation: This message is for the use case when an implementation has detected that Memory has been Enabled.

May also be shown as 816f040c2015ffff or 0x816f040c2015ffff

Severity: Info

Alert Category: System - Other

Serviceable: No

CIM Information: **Prefix:** PLAT and **ID:** 0130

SNMP Trap ID:

Automatically notify Support: No

User response: This is a UEFI detected event. The UEFI diagnostic code for this event can be found in the logged IMM message text. Please refer to the UEFI diagnostic code in the "UEFI diagnostic code" section of the Information Center for the appropriate user response.

816f040c-2016ffff [PhysicalMemoryElementName] Enabled on Subsystem [MemoryElementName].

Explanation: This message is for the use case when an implementation has detected that Memory has been Enabled.

May also be shown as 816f040c2016ffff or 0x816f040c2016ffff

Severity: Info

Alert Category: System - Other

Serviceable: No

CIM Information: **Prefix:** PLAT and **ID:** 0130

SNMP Trap ID:

Automatically notify Support: No

User response: This is a UEFI detected event. The UEFI diagnostic code for this event can be found in the logged IMM message text. Please refer to the UEFI diagnostic code in the "UEFI diagnostic code" section of the Information Center for the appropriate user response.

816f040c-2017ffff [PhysicalMemoryElementName] Enabled on Subsystem [MemoryElementName].

Explanation: This message is for the use case when an implementation has detected that Memory has been Enabled.

May also be shown as 816f040c2017ffff or 0x816f040c2017ffff

Severity: Info

Alert Category: System - Other

Serviceable: No

CIM Information: **Prefix:** PLAT and **ID:** 0130

SNMP Trap ID:

Automatically notify Support: No

User response: This is a UEFI detected event. The UEFI diagnostic code for this event can be found in the logged IMM message text. Please refer to the UEFI diagnostic code in the "UEFI diagnostic code" section of the Information Center for the appropriate user response.

816f040c-2018ffff [PhysicalMemoryElementName] Enabled on Subsystem [MemoryElementName].

Explanation: This message is for the use case when an implementation has detected that Memory has been Enabled.

May also be shown as 816f040c2018ffff or 0x816f040c2018ffff

Severity: Info

Alert Category: System - Other

Serviceable: No

CIM Information: **Prefix:** PLAT and **ID:** 0130

SNMP Trap ID:

Automatically notify Support: No

User response: This is a UEFI detected event. The UEFI diagnostic code for this event can be found in the logged IMM message text. Please refer to the UEFI diagnostic code in the "UEFI diagnostic code" section of the Information Center for the appropriate user response.

816f040c-2019ffff [PhysicalMemoryElementName] Enabled on Subsystem [MemoryElementName].

Explanation: This message is for the use case when an implementation has detected that Memory has been Enabled.

May also be shown as 816f040c2019ffff or 0x816f040c2019ffff

Severity: Info

Alert Category: System - Other

Serviceable: No

CIM Information: **Prefix:** PLAT and **ID:** 0130

SNMP Trap ID:

Automatically notify Support: No

User response: This is a UEFI detected event. The UEFI diagnostic code for this event can be found in the logged IMM message text. Please refer to the UEFI diagnostic code in the "UEFI diagnostic code" section of the Information Center for the appropriate user response.

816f040c-201affff [PhysicalMemoryElementName] Enabled on Subsystem [MemoryElementName].

Explanation: This message is for the use case when an implementation has detected that Memory has been Enabled.

May also be shown as 816f040c201affff or 0x816f040c201affff

Severity: Info

Alert Category: System - Other

Serviceable: No

CIM Information: **Prefix:** PLAT and **ID:** 0130

SNMP Trap ID:

Automatically notify Support: No

User response: This is a UEFI detected event. The UEFI diagnostic code for this event can be found in the logged IMM message text. Please refer to the UEFI diagnostic code in the "UEFI diagnostic code" section of the Information Center for the appropriate user response.

816f040c-201bffff [PhysicalMemoryElementName] Enabled on Subsystem [MemoryElementName].

Explanation: This message is for the use case when an implementation has detected that Memory has been Enabled.

May also be shown as 816f040c201bffff or 0x816f040c201bffff

Severity: Info

Alert Category: System - Other

Serviceable: No

CIM Information: **Prefix:** PLAT and **ID:** 0130

SNMP Trap ID:

Automatically notify Support: No

User response: This is a UEFI detected event. The UEFI diagnostic code for this event can be found in the logged IMM message text. Please refer to the UEFI diagnostic code in the "UEFI diagnostic code" section of the Information Center for the appropriate user response.

816f040c-201cffff [PhysicalMemoryElementName] Enabled on Subsystem [MemoryElementName].

Explanation: This message is for the use case when an implementation has detected that Memory has been Enabled.

May also be shown as 816f040c201cffff or 0x816f040c201cffff

Severity: Info

Alert Category: System - Other

Serviceable: No

CIM Information: **Prefix:** PLAT and **ID:** 0130

SNMP Trap ID:

Automatically notify Support: No

User response: This is a UEFI detected event. The UEFI diagnostic code for this event can be found in the logged IMM message text. Please refer to the UEFI diagnostic code in the "UEFI diagnostic code" section of the Information Center for the appropriate user response.

816f040c-201dffff [PhysicalMemoryElementName] Enabled on Subsystem [MemoryElementName].

Explanation: This message is for the use case when an implementation has detected that Memory has been Enabled.

May also be shown as 816f040c201dffff or 0x816f040c201dffff

Severity: Info

Alert Category: System - Other

Serviceable: No

CIM Information: **Prefix:** PLAT and **ID:** 0130

SNMP Trap ID:

Automatically notify Support: No

User response: This is a UEFI detected event. The UEFI diagnostic code for this event can be found in the logged IMM message text. Please refer to the UEFI diagnostic code in the "UEFI diagnostic code" section of the Information Center for the appropriate user response.

816f040c-201effff [PhysicalMemoryElementName] Enabled on Subsystem [MemoryElementName].

Explanation: This message is for the use case when an implementation has detected that Memory has been Enabled.

May also be shown as 816f040c201effff or 0x816f040c201effff

Severity: Info

Alert Category: System - Other

Serviceable: No

CIM Information: **Prefix:** PLAT and **ID:** 0130

SNMP Trap ID:

Automatically notify Support: No

User response: This is a UEFI detected event. The UEFI diagnostic code for this event can be found in the logged IMM message text. Please refer to the UEFI diagnostic code in the "UEFI diagnostic code" section of the Information Center for the appropriate user response.

816f040c-201fffff [PhysicalMemoryElementName] Enabled on Subsystem [MemoryElementName].

Explanation: This message is for the use case when an implementation has detected that Memory has been Enabled.

May also be shown as 816f040c201fffff or 0x816f040c201fffff

Severity: Info

Alert Category: System - Other

Serviceable: No

CIM Information: **Prefix:** PLAT and **ID:** 0130

SNMP Trap ID:

Automatically notify Support: No

User response: This is a UEFI detected event. The UEFI diagnostic code for this event can be found in the logged IMM message text. Please refer to the UEFI diagnostic code in the "UEFI diagnostic code" section of the Information Center for the appropriate user response.

816f040c-2020ffff [PhysicalMemoryElementName] Enabled on Subsystem [MemoryElementName].

Explanation: This message is for the use case when an implementation has detected that Memory has been Enabled.

May also be shown as 816f040c2020ffff or 0x816f040c2020ffff

Severity: Info

Alert Category: System - Other

Serviceable: No

CIM Information: **Prefix:** PLAT and **ID:** 0130

SNMP Trap ID:

Automatically notify Support: No

User response: This is a UEFI detected event. The UEFI diagnostic code for this event can be found in the logged IMM message text. Please refer to the UEFI diagnostic code in the "UEFI diagnostic code" section of the Information Center for the appropriate user response.

816f040c-2021ffff [PhysicalMemoryElementName] Enabled on Subsystem [MemoryElementName].

Explanation: This message is for the use case when an implementation has detected that Memory has been Enabled.

May also be shown as 816f040c2021ffff or 0x816f040c2021ffff

Severity: Info

Alert Category: System - Other

Serviceable: No

CIM Information: **Prefix:** PLAT and **ID:** 0130

SNMP Trap ID:

Automatically notify Support: No

User response: This is a UEFI detected event. The UEFI diagnostic code for this event can be found in the logged IMM message text. Please refer to the UEFI diagnostic code in the "UEFI diagnostic code" section of the Information Center for the appropriate user response.

816f040c-2022ffff [PhysicalMemoryElementName] Enabled on Subsystem [MemoryElementName].

Explanation: This message is for the use case when an implementation has detected that Memory has been Enabled.

May also be shown as 816f040c2022ffff or 0x816f040c2022ffff

Severity: Info

Alert Category: System - Other

Serviceable: No

CIM Information: **Prefix:** PLAT and **ID:** 0130

SNMP Trap ID:

Automatically notify Support: No

User response: This is a UEFI detected event. The UEFI diagnostic code for this event can be found in the logged IMM message text. Please refer to the UEFI diagnostic code in the "UEFI diagnostic code" section of the Information Center for the appropriate user response.

816f040c-2023ffff [PhysicalMemoryElementName] Enabled on Subsystem [MemoryElementName].

Explanation: This message is for the use case when an implementation has detected that Memory has been Enabled.

May also be shown as 816f040c2023ffff or 0x816f040c2023ffff

Severity: Info

Alert Category: System - Other

Serviceable: No

CIM Information: **Prefix:** PLAT and **ID:** 0130

SNMP Trap ID:

Automatically notify Support: No

User response: This is a UEFI detected event. The UEFI diagnostic code for this event can be found in the logged IMM message text. Please refer to the UEFI diagnostic code in the "UEFI diagnostic code" section of the Information Center for the appropriate user response.

816f040c-2024ffff [PhysicalMemoryElementName] Enabled on Subsystem [MemoryElementName].

Explanation: This message is for the use case when an implementation has detected that Memory has been Enabled.

May also be shown as 816f040c2024ffff or 0x816f040c2024ffff

Severity: Info

Alert Category: System - Other

Serviceable: No

CIM Information: **Prefix:** PLAT and **ID:** 0130

SNMP Trap ID:

Automatically notify Support: No

User response: This is a UEFI detected event. The UEFI diagnostic code for this event can be found in the logged IMM message text. Please refer to the UEFI diagnostic code in the "UEFI diagnostic code" section of the Information Center for the appropriate user response.

816f040c-2025ffff [PhysicalMemoryElementName] Enabled on Subsystem [MemoryElementName].

Explanation: This message is for the use case when an implementation has detected that Memory has been Enabled.

May also be shown as 816f040c2025ffff or 0x816f040c2025ffff

Severity: Info

Alert Category: System - Other

Serviceable: No

CIM Information: **Prefix:** PLAT and **ID:** 0130

SNMP Trap ID:

Automatically notify Support: No

User response: This is a UEFI detected event. The UEFI diagnostic code for this event can be found in the logged IMM message text. Please refer to the UEFI diagnostic code in the "UEFI diagnostic code" section of the Information Center for the appropriate user response.

816f040c-2026ffff [PhysicalMemoryElementName] Enabled on Subsystem [MemoryElementName].

Explanation: This message is for the use case when an implementation has detected that Memory has been Enabled.

May also be shown as 816f040c2026ffff or 0x816f040c2026ffff

Severity: Info

Alert Category: System - Other

Serviceable: No

CIM Information: **Prefix:** PLAT and **ID:** 0130

SNMP Trap ID:

Automatically notify Support: No

User response: This is a UEFI detected event. The UEFI diagnostic code for this event can be found in the logged IMM message text. Please refer to the UEFI diagnostic code in the "UEFI diagnostic code" section of the Information Center for the appropriate user response.

816f040c-2027ffff [PhysicalMemoryElementName] Enabled on Subsystem [MemoryElementName].

Explanation: This message is for the use case when an implementation has detected that Memory has been Enabled.

May also be shown as 816f040c2027ffff or 0x816f040c2027ffff

Severity: Info

Alert Category: System - Other

Serviceable: No

CIM Information: **Prefix:** PLAT and **ID:** 0130

SNMP Trap ID:

Automatically notify Support: No

User response: This is a UEFI detected event. The UEFI diagnostic code for this event can be found in the logged IMM message text. Please refer to the UEFI diagnostic code in the "UEFI diagnostic code" section of the Information Center for the appropriate user response.

816f040c-2028ffff [PhysicalMemoryElementName] Enabled on Subsystem [MemoryElementName].

Explanation: This message is for the use case when an implementation has detected that Memory has been Enabled.

May also be shown as 816f040c2028ffff or 0x816f040c2028ffff

Severity: Info

Alert Category: System - Other

Serviceable: No

CIM Information: **Prefix:** PLAT and **ID:** 0130

SNMP Trap ID:

Automatically notify Support: No

User response: This is a UEFI detected event. The UEFI diagnostic code for this event can be found in the logged IMM message text. Please refer to the UEFI diagnostic code in the "UEFI diagnostic code" section of the Information Center for the appropriate user response.

816f040c-2029ffff [PhysicalMemoryElementName] Enabled on Subsystem [MemoryElementName].

Explanation: This message is for the use case when an implementation has detected that Memory has been Enabled.

May also be shown as 816f040c2029ffff or 0x816f040c2029ffff

Severity: Info

Alert Category: System - Other

Serviceable: No

CIM Information: **Prefix:** PLAT and **ID:** 0130

SNMP Trap ID:

Automatically notify Support: No

User response: This is a UEFI detected event. The UEFI diagnostic code for this event can be found in the logged IMM message text. Please refer to the UEFI diagnostic code in the "UEFI diagnostic code" section of the Information Center for the appropriate user response.

816f040c-202affff [PhysicalMemoryElementName] Enabled on Subsystem [MemoryElementName].

Explanation: This message is for the use case when an implementation has detected that Memory has been Enabled.

May also be shown as 816f040c202affff or 0x816f040c202affff

Severity: Info

Alert Category: System - Other

Serviceable: No

CIM Information: **Prefix:** PLAT and **ID:** 0130

SNMP Trap ID:

Automatically notify Support: No

User response: This is a UEFI detected event. The UEFI diagnostic code for this event can be found in the logged IMM message text. Please refer to the UEFI diagnostic code in the "UEFI diagnostic code" section of the Information Center for the appropriate user response.

816f040c-202bffff [PhysicalMemoryElementName] Enabled on Subsystem [MemoryElementName].

Explanation: This message is for the use case when an implementation has detected that Memory has been Enabled.

May also be shown as 816f040c202bffff or 0x816f040c202bffff

Severity: Info

Alert Category: System - Other

Serviceable: No

CIM Information: **Prefix:** PLAT and **ID:** 0130

SNMP Trap ID:

Automatically notify Support: No

User response: This is a UEFI detected event. The UEFI diagnostic code for this event can be found in the logged IMM message text. Please refer to the UEFI diagnostic code in the "UEFI diagnostic code" section of the Information Center for the appropriate user response.

816f040c-202cffff [PhysicalMemoryElementName] Enabled on Subsystem [MemoryElementName].

Explanation: This message is for the use case when an implementation has detected that Memory has been Enabled.

May also be shown as 816f040c202cffff or 0x816f040c202cffff

Severity: Info

Alert Category: System - Other

Serviceable: No

CIM Information: **Prefix:** PLAT and **ID:** 0130

SNMP Trap ID:

Automatically notify Support: No

User response: This is a UEFI detected event. The UEFI diagnostic code for this event can be found in the logged IMM message text. Please refer to the UEFI diagnostic code in the "UEFI diagnostic code" section of the Information Center for the appropriate user response.

816f040c-202dffff [PhysicalMemoryElementName] Enabled on Subsystem [MemoryElementName].

Explanation: This message is for the use case when an implementation has detected that Memory has been Enabled.

May also be shown as 816f040c202dffff or 0x816f040c202dffff

Severity: Info

Alert Category: System - Other

Serviceable: No

CIM Information: **Prefix:** PLAT and **ID:** 0130

SNMP Trap ID:

Automatically notify Support: No

User response: This is a UEFI detected event. The UEFI diagnostic code for this event can be found in the logged IMM message text. Please refer to the UEFI diagnostic code in the "UEFI diagnostic code" section of the Information Center for the appropriate user response.

816f040c-202effff [PhysicalMemoryElementName] Enabled on Subsystem [MemoryElementName].

Explanation: This message is for the use case when an implementation has detected that Memory has been Enabled.

May also be shown as 816f040c202effff or 0x816f040c202effff

Severity: Info

Alert Category: System - Other

Serviceable: No

CIM Information: **Prefix:** PLAT and **ID:** 0130

SNMP Trap ID:

Automatically notify Support: No

User response: This is a UEFI detected event. The UEFI diagnostic code for this event can be found in the logged IMM message text. Please refer to the UEFI diagnostic code in the "UEFI diagnostic code" section of the Information Center for the appropriate user response.

816f040c-202fffff [PhysicalMemoryElementName] Enabled on Subsystem [MemoryElementName].

Explanation: This message is for the use case when an implementation has detected that Memory has been Enabled.

May also be shown as 816f040c202fffff or 0x816f040c202fffff

Severity: Info

Alert Category: System - Other

Serviceable: No

CIM Information: **Prefix:** PLAT and **ID:** 0130

SNMP Trap ID:

Automatically notify Support: No

User response: This is a UEFI detected event. The UEFI diagnostic code for this event can be found in the logged IMM message text. Please refer to the UEFI diagnostic code in the "UEFI diagnostic code" section of the Information Center for the appropriate user response.

816f040c-2030ffff [PhysicalMemoryElementName] Enabled on Subsystem [MemoryElementName].

Explanation: This message is for the use case when an implementation has detected that Memory has been Enabled.

May also be shown as 816f040c2030ffff or 0x816f040c2030ffff

Severity: Info

Alert Category: System - Other

Serviceable: No

CIM Information: **Prefix:** PLAT and **ID:** 0130

SNMP Trap ID:

Automatically notify Support: No

User response: This is a UEFI detected event. The UEFI diagnostic code for this event can be found in the logged IMM message text. Please refer to the UEFI diagnostic code in the "UEFI diagnostic code" section of the Information Center for the appropriate user response.

816f040c-2581ffff [PhysicalMemoryElementName] Enabled on Subsystem [MemoryElementName].

Explanation: This message is for the use case when an implementation has detected that Memory has been Enabled. All DIMMs. One of the DIMMs.

May also be shown as 816f040c2581ffff or 0x816f040c2581ffff

Severity: Info

Alert Category: System - Other

Serviceable: No

CIM Information: **Prefix:** PLAT and **ID:** 0130

SNMP Trap ID:

Automatically notify Support: No

User response: This is a UEFI detected event. The UEFI diagnostic code for this event can be found in the logged IMM message text. Please refer to the UEFI diagnostic code in the "UEFI diagnostic code" section of the Information Center for the appropriate user response.

816f0413-2582ffff A PCI PERR recovery has occurred on system [ComputerSystemElementName].

Explanation: This message is for the use case when an implementation has detected a PCI PERR recovered. All PCI Error. One of PCI Error. PCIs.

May also be shown as 816f04132582ffff or 0x816f04132582ffff

Severity: Info

Alert Category: Critical - Other

Serviceable: No

CIM Information: **Prefix:** PLAT and **ID:** 0233

SNMP Trap ID: 50

Automatically notify Support: No

User response: This is a UEFI detected event. The UEFI diagnostic code for this event can be found in the logged IMM message text. Please refer to the UEFI diagnostic code in the "UEFI diagnostic code" section of the Information Center for the appropriate user response.

816f0507-0301ffff [ProcessorElementName] has Recovered from a Configuration Mismatch.

Explanation: This message is for the use case when an implementation has Recovered from a Processor Configuration Mismatch.

May also be shown as 816f05070301ffff or 0x816f05070301ffff

Severity: Info

Alert Category: Critical - CPU

Serviceable: No

CIM Information: **Prefix:** PLAT and **ID:** 0063

SNMP Trap ID: 40

Automatically notify Support: No

User response: This is a UEFI detected event. The UEFI diagnostic code for this event can be found in the logged IMM message text. Please refer to the UEFI diagnostic code in the "UEFI diagnostic code" section of the Information Center for the appropriate user response.

816f0507-0302ffff [ProcessorElementName] has Recovered from a Configuration Mismatch.

Explanation: This message is for the use case when an implementation has Recovered from a Processor Configuration Mismatch.

May also be shown as 816f05070302ffff or 0x816f05070302ffff

Severity: Info

Alert Category: Critical - CPU

Serviceable: No

CIM Information: **Prefix:** PLAT and **ID:** 0063

SNMP Trap ID: 40

Automatically notify Support: No

User response: This is a UEFI detected event. The UEFI diagnostic code for this event can be found in the logged IMM message text. Please refer to the UEFI diagnostic code in the "UEFI diagnostic code" section of the Information Center for the appropriate user response.

816f0507-0303ffff [ProcessorElementName] has Recovered from a Configuration Mismatch.

Explanation: This message is for the use case when an implementation has Recovered from a Processor Configuration Mismatch.

May also be shown as 816f05070303ffff or 0x816f05070303ffff

Severity: Info

Alert Category: Critical - CPU

Serviceable: No

CIM Information: **Prefix:** PLAT and **ID:** 0063

SNMP Trap ID: 40

Automatically notify Support: No

User response: This is a UEFI detected event. The UEFI diagnostic code for this event can be found in the logged IMM message text. Please refer to the UEFI diagnostic code in the "UEFI diagnostic code" section of the Information Center for the appropriate user response.

816f0507-0304ffff [ProcessorElementName] has Recovered from a Configuration Mismatch.

Explanation: This message is for the use case when an implementation has Recovered from a Processor Configuration Mismatch.

May also be shown as 816f05070304ffff or 0x816f05070304ffff

Severity: Info

Alert Category: Critical - CPU

Serviceable: No

CIM Information: **Prefix:** PLAT and **ID:** 0063

SNMP Trap ID: 40

Automatically notify Support: No

User response: This is a UEFI detected event. The UEFI diagnostic code for this event can be found in the logged IMM message text. Please refer to the UEFI diagnostic code in the "UEFI diagnostic code" section of the Information Center for the appropriate user response.

816f0507-2584ffff [ProcessorElementName] has Recovered from a Configuration Mismatch.

Explanation: This message is for the use case when an implementation has recovered from a Processor Configuration Mismatch. All CPUs. One of CPUs.

May also be shown as 816f05072584ffff or 0x816f05072584ffff

Severity: Info

Alert Category: Critical - CPU

Serviceable: No

CIM Information: **Prefix:** PLAT and **ID:** 0063

SNMP Trap ID: 40

Automatically notify Support: No

User response: This is a UEFI detected event. The UEFI diagnostic code for this event can be found in the logged IMM message text. Please refer to the UEFI diagnostic code in the "UEFI diagnostic code" section of the Information Center for the appropriate user response.

816f050c-2001ffff Memory Logging Limit Removed for [PhysicalMemoryElementName] on Subsystem [MemoryElementName].

Explanation: This message is for the use case when an implementation has detected that the Memory Logging Limit has been Removed.

May also be shown as 816f050c2001ffff or 0x816f050c2001ffff

Severity: Info

Alert Category: Warning - Memory

Serviceable: No

CIM Information: **Prefix:** PLAT and **ID:** 0145

SNMP Trap ID: 43

Automatically notify Support: No

User response: This is a UEFI detected event. The UEFI diagnostic code for this event can be found in the logged IMM message text. Please refer to the UEFI diagnostic code in the "UEFI diagnostic code" section of the Information Center for the appropriate user response.

816f050c-2002ffff Memory Logging Limit Removed for [PhysicalMemoryElementName] on Subsystem [MemoryElementName].

Explanation: This message is for the use case when an implementation has detected that the Memory Logging Limit has been Removed.

May also be shown as 816f050c2002ffff or 0x816f050c2002ffff

Severity: Info

Alert Category: Warning - Memory

Serviceable: No

CIM Information: **Prefix:** PLAT and **ID:** 0145

SNMP Trap ID: 43

Automatically notify Support: No

User response: This is a UEFI detected event. The UEFI diagnostic code for this event can be found in the logged IMM message text. Please refer to the UEFI diagnostic code in the "UEFI diagnostic code" section of the Information Center for the appropriate user response.

816f050c-2003ffff Memory Logging Limit Removed for [PhysicalMemoryElementName] on Subsystem [MemoryElementName].

Explanation: This message is for the use case when an implementation has detected that the Memory Logging Limit has been Removed.

May also be shown as 816f050c2003ffff or 0x816f050c2003ffff

Severity: Info

Alert Category: Warning - Memory

Serviceable: No

CIM Information: **Prefix:** PLAT and **ID:** 0145

SNMP Trap ID: 43

Automatically notify Support: No

User response: This is a UEFI detected event. The UEFI diagnostic code for this event can be found in the logged IMM message text. Please refer to the UEFI diagnostic code in the "UEFI diagnostic code" section of the Information Center for the appropriate user response.

816f050c-2004ffff Memory Logging Limit Removed for [PhysicalMemoryElementName] on Subsystem [MemoryElementName].

Explanation: This message is for the use case when an implementation has detected that the Memory Logging Limit has been Removed.

May also be shown as 816f050c2004ffff or 0x816f050c2004ffff

Severity: Info

Alert Category: Warning - Memory

Serviceable: No

CIM Information: **Prefix:** PLAT and **ID:** 0145

SNMP Trap ID: 43

Automatically notify Support: No

User response: This is a UEFI detected event. The UEFI diagnostic code for this event can be found in the logged IMM message text. Please refer to the UEFI diagnostic code in the "UEFI diagnostic code" section of the Information Center for the appropriate user response.

816f050c-2005ffff Memory Logging Limit Removed for [PhysicalMemoryElementName] on Subsystem [MemoryElementName].

Explanation: This message is for the use case when an implementation has detected that the Memory Logging Limit has been Removed.

May also be shown as 816f050c2005ffff or 0x816f050c2005ffff

Severity: Info

Alert Category: Warning - Memory

Serviceable: No

CIM Information: **Prefix:** PLAT and **ID:** 0145

SNMP Trap ID: 43

Automatically notify Support: No

User response: This is a UEFI detected event. The UEFI diagnostic code for this event can be found in the logged IMM message text. Please refer to the UEFI diagnostic code in the "UEFI diagnostic code" section of the Information Center for the appropriate user response.

816f050c-2006ffff Memory Logging Limit Removed for [PhysicalMemoryElementName] on Subsystem [MemoryElementName].

Explanation: This message is for the use case when an implementation has detected that the Memory Logging Limit has been Removed.

May also be shown as 816f050c2006ffff or 0x816f050c2006ffff

Severity: Info

Alert Category: Warning - Memory

Serviceable: No

CIM Information: **Prefix:** PLAT and **ID:** 0145

SNMP Trap ID: 43

Automatically notify Support: No

User response: This is a UEFI detected event. The UEFI diagnostic code for this event can be found in the logged IMM message text. Please refer to the UEFI diagnostic code in the "UEFI diagnostic code" section of the Information Center for the appropriate user response.

816f050c-2007ffff Memory Logging Limit Removed for [PhysicalMemoryElementName] on Subsystem [MemoryElementName].

Explanation: This message is for the use case when an implementation has detected that the Memory Logging Limit has been Removed.

May also be shown as 816f050c2007ffff or 0x816f050c2007ffff

Severity: Info

Alert Category: Warning - Memory

Serviceable: No

CIM Information: **Prefix:** PLAT and **ID:** 0145

SNMP Trap ID: 43

Automatically notify Support: No

User response: This is a UEFI detected event. The UEFI diagnostic code for this event can be found in the logged IMM message text. Please refer to the UEFI diagnostic code in the "UEFI diagnostic code" section of the Information Center for the appropriate user response.

816f050c-2008ffff Memory Logging Limit Removed for [PhysicalMemoryElementName] on Subsystem [MemoryElementName].

Explanation: This message is for the use case when an implementation has detected that the Memory Logging Limit has been Removed.

May also be shown as 816f050c2008ffff or 0x816f050c2008ffff

Severity: Info

Alert Category: Warning - Memory

Serviceable: No

CIM Information: **Prefix:** PLAT and **ID:** 0145

SNMP Trap ID: 43

Automatically notify Support: No

User response: This is a UEFI detected event. The UEFI diagnostic code for this event can be found in the logged IMM message text. Please refer to the UEFI diagnostic code in the "UEFI diagnostic code" section of the Information Center for the appropriate user response.

816f050c-2009ffff Memory Logging Limit Removed for [PhysicalMemoryElementName] on Subsystem [MemoryElementName].

Explanation: This message is for the use case when an implementation has detected that the Memory Logging Limit has been Removed.

May also be shown as 816f050c2009ffff or 0x816f050c2009ffff

Severity: Info

Alert Category: Warning - Memory

Serviceable: No

CIM Information: **Prefix:** PLAT and **ID:** 0145

SNMP Trap ID: 43

Automatically notify Support: No

User response: This is a UEFI detected event. The UEFI diagnostic code for this event can be found in the logged IMM message text. Please refer to the UEFI diagnostic code in the "UEFI diagnostic code" section of the Information Center for the appropriate user response.

816f050c-200affff Memory Logging Limit Removed for [PhysicalMemoryElementName] on Subsystem [MemoryElementName].

Explanation: This message is for the use case when an implementation has detected that the Memory Logging Limit has been Removed.

May also be shown as 816f050c200affff or 0x816f050c200affff

Severity: Info

Alert Category: Warning - Memory

Serviceable: No

CIM Information: **Prefix:** PLAT and **ID:** 0145

SNMP Trap ID: 43

Automatically notify Support: No

User response: This is a UEFI detected event. The UEFI diagnostic code for this event can be found in the logged IMM message text. Please refer to the UEFI diagnostic code in the "UEFI diagnostic code" section of the Information Center for the appropriate user response.

816f050c-200bffff Memory Logging Limit Removed for [PhysicalMemoryElementName] on Subsystem [MemoryElementName].

Explanation: This message is for the use case when an implementation has detected that the Memory Logging Limit has been Removed.

May also be shown as 816f050c200bffff or 0x816f050c200bffff

Severity: Info

Alert Category: Warning - Memory

Serviceable: No

CIM Information: **Prefix:** PLAT and **ID:** 0145

SNMP Trap ID: 43

Automatically notify Support: No

User response: This is a UEFI detected event. The UEFI diagnostic code for this event can be found in the logged IMM message text. Please refer to the UEFI diagnostic code in the "UEFI diagnostic code" section of the Information Center for the appropriate user response.

816f050c-200cffff Memory Logging Limit Removed for [PhysicalMemoryElementName] on Subsystem [MemoryElementName].

Explanation: This message is for the use case when an implementation has detected that the Memory Logging Limit has been Removed.

May also be shown as 816f050c200cffff or 0x816f050c200cffff

Severity: Info

Alert Category: Warning - Memory

Serviceable: No

CIM Information: **Prefix:** PLAT and **ID:** 0145

SNMP Trap ID: 43

Automatically notify Support: No

User response: This is a UEFI detected event. The UEFI diagnostic code for this event can be found in the logged IMM message text. Please refer to the UEFI diagnostic code in the "UEFI diagnostic code" section of the Information Center for the appropriate user response.

816f050c-200dffff Memory Logging Limit Removed for [PhysicalMemoryElementName] on Subsystem [MemoryElementName].

Explanation: This message is for the use case when an implementation has detected that the Memory Logging Limit has been Removed.

May also be shown as 816f050c200dffff or 0x816f050c200dffff

Severity: Info

Alert Category: Warning - Memory

Serviceable: No

CIM Information: **Prefix:** PLAT and **ID:** 0145

SNMP Trap ID: 43

Automatically notify Support: No

User response: This is a UEFI detected event. The UEFI diagnostic code for this event can be found in the logged IMM message text. Please refer to the UEFI diagnostic code in the "UEFI diagnostic code" section of the Information Center for the appropriate user response.

816f050c-200effff Memory Logging Limit Removed for [PhysicalMemoryElementName] on Subsystem [MemoryElementName].

Explanation: This message is for the use case when an implementation has detected that the Memory Logging Limit has been Removed.

May also be shown as 816f050c200effff or 0x816f050c200effff

Severity: Info

Alert Category: Warning - Memory

Serviceable: No

CIM Information: **Prefix:** PLAT and **ID:** 0145

SNMP Trap ID: 43

Automatically notify Support: No

User response: This is a UEFI detected event. The UEFI diagnostic code for this event can be found in the logged IMM message text. Please refer to the UEFI diagnostic code in the "UEFI diagnostic code" section of the Information Center for the appropriate user response.

816f050c-200fffff Memory Logging Limit Removed for [PhysicalMemoryElementName] on Subsystem [MemoryElementName].

Explanation: This message is for the use case when an implementation has detected that the Memory Logging Limit has been Removed.

May also be shown as 816f050c200fffff or 0x816f050c200fffff

Severity: Info

Alert Category: Warning - Memory

Serviceable: No

CIM Information: **Prefix:** PLAT and **ID:** 0145

SNMP Trap ID: 43

Automatically notify Support: No

User response: This is a UEFI detected event. The UEFI diagnostic code for this event can be found in the logged IMM message text. Please refer to the UEFI diagnostic code in the "UEFI diagnostic code" section of the Information Center for the appropriate user response.

816f050c-2010ffff Memory Logging Limit Removed for [PhysicalMemoryElementName] on Subsystem [MemoryElementName].

Explanation: This message is for the use case when an implementation has detected that the Memory Logging Limit has been Removed.

May also be shown as 816f050c2010ffff or 0x816f050c2010ffff

Severity: Info

Alert Category: Warning - Memory

Serviceable: No

CIM Information: **Prefix:** PLAT and **ID:** 0145

SNMP Trap ID: 43

Automatically notify Support: No

User response: This is a UEFI detected event. The UEFI diagnostic code for this event can be found in the logged IMM message text. Please refer to the UEFI diagnostic code in the "UEFI diagnostic code" section of the Information Center for the appropriate user response.

816f050c-2011ffff Memory Logging Limit Removed for [PhysicalMemoryElementName] on Subsystem [MemoryElementName].

Explanation: This message is for the use case when an implementation has detected that the Memory Logging Limit has been Removed.

May also be shown as 816f050c2011ffff or 0x816f050c2011ffff

Severity: Info

Alert Category: Warning - Memory

Serviceable: No

CIM Information: **Prefix:** PLAT and **ID:** 0145

SNMP Trap ID: 43

Automatically notify Support: No

User response: This is a UEFI detected event. The UEFI diagnostic code for this event can be found in the logged IMM message text. Please refer to the UEFI diagnostic code in the "UEFI diagnostic code" section of the Information Center for the appropriate user response.

816f050c-2012ffff Memory Logging Limit Removed for [PhysicalMemoryElementName] on Subsystem [MemoryElementName].

Explanation: This message is for the use case when an implementation has detected that the Memory Logging Limit has been Removed.

May also be shown as 816f050c2012ffff or 0x816f050c2012ffff

Severity: Info

Alert Category: Warning - Memory

Serviceable: No

CIM Information: **Prefix:** PLAT and **ID:** 0145

SNMP Trap ID: 43

Automatically notify Support: No

User response: This is a UEFI detected event. The UEFI diagnostic code for this event can be found in the logged IMM message text. Please refer to the UEFI diagnostic code in the "UEFI diagnostic code" section of the Information Center for the appropriate user response.

816f050c-2013ffff Memory Logging Limit Removed for [PhysicalMemoryElementName] on Subsystem [MemoryElementName].

Explanation: This message is for the use case when an implementation has detected that the Memory Logging Limit has been Removed.

May also be shown as 816f050c2013ffff or 0x816f050c2013ffff

Severity: Info

Alert Category: Warning - Memory

Serviceable: No

CIM Information: **Prefix:** PLAT and **ID:** 0145

SNMP Trap ID: 43

Automatically notify Support: No

User response: This is a UEFI detected event. The UEFI diagnostic code for this event can be found in the logged IMM message text. Please refer to the UEFI diagnostic code in the "UEFI diagnostic code" section of the Information Center for the appropriate user response.

816f050c-2014ffff Memory Logging Limit Removed for [PhysicalMemoryElementName] on Subsystem [MemoryElementName].

Explanation: This message is for the use case when an implementation has detected that the Memory Logging Limit has been Removed.

May also be shown as 816f050c2014ffff or 0x816f050c2014ffff

Severity: Info

Alert Category: Warning - Memory

Serviceable: No

CIM Information: **Prefix:** PLAT and **ID:** 0145

SNMP Trap ID: 43

Automatically notify Support: No

User response: This is a UEFI detected event. The UEFI diagnostic code for this event can be found in the logged IMM message text. Please refer to the UEFI diagnostic code in the "UEFI diagnostic code" section of the Information Center for the appropriate user response.

816f050c-2015ffff Memory Logging Limit Removed for [PhysicalMemoryElementName] on Subsystem [MemoryElementName].

Explanation: This message is for the use case when an implementation has detected that the Memory Logging Limit has been Removed.

May also be shown as 816f050c2015ffff or 0x816f050c2015ffff

Severity: Info

Alert Category: Warning - Memory

Serviceable: No

CIM Information: **Prefix:** PLAT and **ID:** 0145

SNMP Trap ID: 43

Automatically notify Support: No

User response: This is a UEFI detected event. The UEFI diagnostic code for this event can be found in the logged IMM message text. Please refer to the UEFI diagnostic code in the "UEFI diagnostic code" section of the Information Center for the appropriate user response.

816f050c-2016ffff Memory Logging Limit Removed for [PhysicalMemoryElementName] on Subsystem [MemoryElementName].

Explanation: This message is for the use case when an implementation has detected that the Memory Logging Limit has been Removed.

May also be shown as 816f050c2016ffff or 0x816f050c2016ffff

Severity: Info

Alert Category: Warning - Memory

Serviceable: No

CIM Information: **Prefix:** PLAT and **ID:** 0145

SNMP Trap ID: 43

Automatically notify Support: No

User response: This is a UEFI detected event. The UEFI diagnostic code for this event can be found in the logged IMM message text. Please refer to the UEFI diagnostic code in the "UEFI diagnostic code" section of the Information Center for the appropriate user response.

816f050c-2017ffff Memory Logging Limit Removed for [PhysicalMemoryElementName] on Subsystem [MemoryElementName].

Explanation: This message is for the use case when an implementation has detected that the Memory Logging Limit has been Removed.

May also be shown as 816f050c2017ffff or 0x816f050c2017ffff

Severity: Info

Alert Category: Warning - Memory

Serviceable: No

CIM Information: **Prefix:** PLAT and **ID:** 0145

SNMP Trap ID: 43

Automatically notify Support: No

User response: This is a UEFI detected event. The UEFI diagnostic code for this event can be found in the logged IMM message text. Please refer to the UEFI diagnostic code in the "UEFI diagnostic code" section of the Information Center for the appropriate user response.

816f050c-2018ffff Memory Logging Limit Removed for [PhysicalMemoryElementName] on Subsystem [MemoryElementName].

Explanation: This message is for the use case when an implementation has detected that the Memory Logging Limit has been Removed.

May also be shown as 816f050c2018ffff or 0x816f050c2018ffff

Severity: Info

Alert Category: Warning - Memory

Serviceable: No

CIM Information: **Prefix:** PLAT and **ID:** 0145

SNMP Trap ID: 43

Automatically notify Support: No

User response: This is a UEFI detected event. The UEFI diagnostic code for this event can be found in the logged IMM message text. Please refer to the UEFI diagnostic code in the "UEFI diagnostic code" section of the Information Center for the appropriate user response.

816f050c-2019ffff Memory Logging Limit Removed for [PhysicalMemoryElementName] on Subsystem [MemoryElementName].

Explanation: This message is for the use case when an implementation has detected that the Memory Logging Limit has been Removed.

May also be shown as 816f050c2019ffff or 0x816f050c2019ffff

Severity: Info

Alert Category: Warning - Memory

Serviceable: No

CIM Information: **Prefix:** PLAT and **ID:** 0145

SNMP Trap ID: 43

Automatically notify Support: No

User response: This is a UEFI detected event. The UEFI diagnostic code for this event can be found in the logged IMM message text. Please refer to the UEFI diagnostic code in the "UEFI diagnostic code" section of the Information Center for the appropriate user response.

816f050c-201affff Memory Logging Limit Removed for [PhysicalMemoryElementName] on Subsystem [MemoryElementName].

Explanation: This message is for the use case when an implementation has detected that the Memory Logging Limit has been Removed.

May also be shown as 816f050c201affff or 0x816f050c201affff

Severity: Info

Alert Category: Warning - Memory

Serviceable: No

CIM Information: **Prefix:** PLAT and **ID:** 0145

SNMP Trap ID: 43

Automatically notify Support: No

User response: This is a UEFI detected event. The UEFI diagnostic code for this event can be found in the logged IMM message text. Please refer to the UEFI diagnostic code in the "UEFI diagnostic code" section of the Information Center for the appropriate user response.

816f050c-201bffff Memory Logging Limit Removed for [PhysicalMemoryElementName] on Subsystem [MemoryElementName].

Explanation: This message is for the use case when an implementation has detected that the Memory Logging Limit has been Removed.

May also be shown as 816f050c201bffff or 0x816f050c201bffff

Severity: Info

Alert Category: Warning - Memory

Serviceable: No

CIM Information: **Prefix:** PLAT and **ID:** 0145

SNMP Trap ID: 43

Automatically notify Support: No

User response: This is a UEFI detected event. The UEFI diagnostic code for this event can be found in the logged IMM message text. Please refer to the UEFI diagnostic code in the "UEFI diagnostic code" section of the Information Center for the appropriate user response.

816f050c-201cffff Memory Logging Limit Removed for [PhysicalMemoryElementName] on Subsystem [MemoryElementName].

Explanation: This message is for the use case when an implementation has detected that the Memory Logging Limit has been Removed.

May also be shown as 816f050c201cffff or 0x816f050c201cffff

Severity: Info

Alert Category: Warning - Memory

Serviceable: No

CIM Information: **Prefix:** PLAT and **ID:** 0145

SNMP Trap ID: 43

Automatically notify Support: No

User response: This is a UEFI detected event. The UEFI diagnostic code for this event can be found in the logged IMM message text. Please refer to the UEFI diagnostic code in the "UEFI diagnostic code" section of the Information Center for the appropriate user response.

816f050c-201dffff Memory Logging Limit Removed for [PhysicalMemoryElementName] on Subsystem [MemoryElementName].

Explanation: This message is for the use case when an implementation has detected that the Memory Logging Limit has been Removed.

May also be shown as 816f050c201dffff or 0x816f050c201dffff

Severity: Info

Alert Category: Warning - Memory

Serviceable: No

CIM Information: **Prefix:** PLAT and **ID:** 0145

SNMP Trap ID: 43

Automatically notify Support: No

User response: This is a UEFI detected event. The UEFI diagnostic code for this event can be found in the logged IMM message text. Please refer to the UEFI diagnostic code in the "UEFI diagnostic code" section of the Information Center for the appropriate user response.

816f050c-201effff Memory Logging Limit Removed for [PhysicalMemoryElementName] on Subsystem [MemoryElementName].

Explanation: This message is for the use case when an implementation has detected that the Memory Logging Limit has been Removed.

May also be shown as 816f050c201effff or 0x816f050c201effff

Severity: Info

Alert Category: Warning - Memory

Serviceable: No

CIM Information: **Prefix:** PLAT and **ID:** 0145

SNMP Trap ID: 43

Automatically notify Support: No

User response: This is a UEFI detected event. The UEFI diagnostic code for this event can be found in the logged IMM message text. Please refer to the UEFI diagnostic code in the "UEFI diagnostic code" section of the Information Center for the appropriate user response.

816f050c-201fffff Memory Logging Limit Removed for [PhysicalMemoryElementName] on Subsystem [MemoryElementName].

Explanation: This message is for the use case when an implementation has detected that the Memory Logging Limit has been Removed.

May also be shown as 816f050c201fffff or 0x816f050c201fffff

Severity: Info

Alert Category: Warning - Memory

Serviceable: No

CIM Information: **Prefix:** PLAT and **ID:** 0145

SNMP Trap ID: 43

Automatically notify Support: No

User response: This is a UEFI detected event. The UEFI diagnostic code for this event can be found in the logged IMM message text. Please refer to the UEFI diagnostic code in the "UEFI diagnostic code" section of the Information Center for the appropriate user response.

816f050c-2020ffff Memory Logging Limit Removed for [PhysicalMemoryElementName] on Subsystem [MemoryElementName].

Explanation: This message is for the use case when an implementation has detected that the Memory Logging Limit has been Removed.

May also be shown as 816f050c2020ffff or 0x816f050c2020ffff

Severity: Info

Alert Category: Warning - Memory

Serviceable: No

CIM Information: **Prefix:** PLAT and **ID:** 0145

SNMP Trap ID: 43

Automatically notify Support: No

User response: This is a UEFI detected event. The UEFI diagnostic code for this event can be found in the logged IMM message text. Please refer to the UEFI diagnostic code in the "UEFI diagnostic code" section of the Information Center for the appropriate user response.

816f050c-2021ffff Memory Logging Limit Removed for [PhysicalMemoryElementName] on Subsystem [MemoryElementName].

Explanation: This message is for the use case when an implementation has detected that the Memory Logging Limit has been Removed.

May also be shown as 816f050c2021ffff or 0x816f050c2021ffff

Severity: Info

Alert Category: Warning - Memory

Serviceable: No

CIM Information: **Prefix:** PLAT and **ID:** 0145

SNMP Trap ID: 43

Automatically notify Support: No

User response: This is a UEFI detected event. The UEFI diagnostic code for this event can be found in the logged IMM message text. Please refer to the UEFI diagnostic code in the "UEFI diagnostic code" section of the Information Center for the appropriate user response.

816f050c-2022ffff Memory Logging Limit Removed for [PhysicalMemoryElementName] on Subsystem [MemoryElementName].

Explanation: This message is for the use case when an implementation has detected that the Memory Logging Limit has been Removed.

May also be shown as 816f050c2022ffff or 0x816f050c2022ffff

Severity: Info

Alert Category: Warning - Memory

Serviceable: No

CIM Information: **Prefix:** PLAT and **ID:** 0145

SNMP Trap ID: 43

Automatically notify Support: No

User response: This is a UEFI detected event. The UEFI diagnostic code for this event can be found in the logged IMM message text. Please refer to the UEFI diagnostic code in the "UEFI diagnostic code" section of the Information Center for the appropriate user response.

816f050c-2023ffff Memory Logging Limit Removed for [PhysicalMemoryElementName] on Subsystem [MemoryElementName].

Explanation: This message is for the use case when an implementation has detected that the Memory Logging Limit has been Removed.

May also be shown as 816f050c2023ffff or 0x816f050c2023ffff

Severity: Info

Alert Category: Warning - Memory

Serviceable: No

CIM Information: **Prefix:** PLAT and **ID:** 0145

SNMP Trap ID: 43

Automatically notify Support: No

User response: This is a UEFI detected event. The UEFI diagnostic code for this event can be found in the logged IMM message text. Please refer to the UEFI diagnostic code in the "UEFI diagnostic code" section of the Information Center for the appropriate user response.

816f050c-2024ffff Memory Logging Limit Removed for [PhysicalMemoryElementName] on Subsystem [MemoryElementName].

Explanation: This message is for the use case when an implementation has detected that the Memory Logging Limit has been Removed.

May also be shown as 816f050c2024ffff or 0x816f050c2024ffff

Severity: Info

Alert Category: Warning - Memory

Serviceable: No

CIM Information: **Prefix:** PLAT and **ID:** 0145

SNMP Trap ID: 43

Automatically notify Support: No

User response: This is a UEFI detected event. The UEFI diagnostic code for this event can be found in the logged IMM message text. Please refer to the UEFI diagnostic code in the "UEFI diagnostic code" section of the Information Center for the appropriate user response.

816f050c-2025ffff Memory Logging Limit Removed for [PhysicalMemoryElementName] on Subsystem [MemoryElementName].

Explanation: This message is for the use case when an implementation has detected that the Memory Logging Limit has been Removed.

May also be shown as 816f050c2025ffff or 0x816f050c2025ffff

Severity: Info

Alert Category: Warning - Memory

Serviceable: No

CIM Information: **Prefix:** PLAT and **ID:** 0145

SNMP Trap ID: 43

Automatically notify Support: No

User response: This is a UEFI detected event. The UEFI diagnostic code for this event can be found in the logged IMM message text. Please refer to the UEFI diagnostic code in the "UEFI diagnostic code" section of the Information Center for the appropriate user response.

816f050c-2026ffff Memory Logging Limit Removed for [PhysicalMemoryElementName] on Subsystem [MemoryElementName].

Explanation: This message is for the use case when an implementation has detected that the Memory Logging Limit has been Removed.

May also be shown as 816f050c2026ffff or 0x816f050c2026ffff

Severity: Info

Alert Category: Warning - Memory

Serviceable: No

CIM Information: **Prefix:** PLAT and **ID:** 0145

SNMP Trap ID: 43

Automatically notify Support: No

User response: This is a UEFI detected event. The UEFI diagnostic code for this event can be found in the logged IMM message text. Please refer to the UEFI diagnostic code in the "UEFI diagnostic code" section of the Information Center for the appropriate user response.

816f050c-2027ffff Memory Logging Limit Removed for [PhysicalMemoryElementName] on Subsystem [MemoryElementName].

Explanation: This message is for the use case when an implementation has detected that the Memory Logging Limit has been Removed.

May also be shown as 816f050c2027ffff or 0x816f050c2027ffff

Severity: Info

Alert Category: Warning - Memory

Serviceable: No

CIM Information: **Prefix:** PLAT and **ID:** 0145

SNMP Trap ID: 43

Automatically notify Support: No

User response: This is a UEFI detected event. The UEFI diagnostic code for this event can be found in the logged IMM message text. Please refer to the UEFI diagnostic code in the "UEFI diagnostic code" section of the Information Center for the appropriate user response.

816f050c-2028ffff Memory Logging Limit Removed for [PhysicalMemoryElementName] on Subsystem [MemoryElementName].

Explanation: This message is for the use case when an implementation has detected that the Memory Logging Limit has been Removed.

May also be shown as 816f050c2028ffff or 0x816f050c2028ffff

Severity: Info

Alert Category: Warning - Memory

Serviceable: No

CIM Information: **Prefix:** PLAT and **ID:** 0145

SNMP Trap ID: 43

Automatically notify Support: No

User response: This is a UEFI detected event. The UEFI diagnostic code for this event can be found in the logged IMM message text. Please refer to the UEFI diagnostic code in the "UEFI diagnostic code" section of the Information Center for the appropriate user response.

816f050c-2029ffff Memory Logging Limit Removed for [PhysicalMemoryElementName] on Subsystem [MemoryElementName].

Explanation: This message is for the use case when an implementation has detected that the Memory Logging Limit has been Removed.

May also be shown as 816f050c2029ffff or 0x816f050c2029ffff

Severity: Info

Alert Category: Warning - Memory

Serviceable: No

CIM Information: **Prefix:** PLAT and **ID:** 0145

SNMP Trap ID: 43

Automatically notify Support: No

User response: This is a UEFI detected event. The UEFI diagnostic code for this event can be found in the logged IMM message text. Please refer to the UEFI diagnostic code in the "UEFI diagnostic code" section of the Information Center for the appropriate user response.

816f050c-202affff Memory Logging Limit Removed for [PhysicalMemoryElementName] on Subsystem [MemoryElementName].

Explanation: This message is for the use case when an implementation has detected that the Memory Logging Limit has been Removed.

May also be shown as 816f050c202affff or 0x816f050c202affff

Severity: Info

Alert Category: Warning - Memory

Serviceable: No

CIM Information: **Prefix:** PLAT and **ID:** 0145

SNMP Trap ID: 43

Automatically notify Support: No

User response: This is a UEFI detected event. The UEFI diagnostic code for this event can be found in the logged IMM message text. Please refer to the UEFI diagnostic code in the "UEFI diagnostic code" section of the Information Center for the appropriate user response.

816f050c-202bffff Memory Logging Limit Removed for [PhysicalMemoryElementName] on Subsystem [MemoryElementName].

Explanation: This message is for the use case when an implementation has detected that the Memory Logging Limit has been Removed.

May also be shown as 816f050c202bffff or 0x816f050c202bffff

Severity: Info

Alert Category: Warning - Memory

Serviceable: No

CIM Information: **Prefix:** PLAT and **ID:** 0145

SNMP Trap ID: 43

Automatically notify Support: No

User response: This is a UEFI detected event. The UEFI diagnostic code for this event can be found in the logged IMM message text. Please refer to the UEFI diagnostic code in the "UEFI diagnostic code" section of the Information Center for the appropriate user response.

816f050c-202cffff Memory Logging Limit Removed for [PhysicalMemoryElementName] on Subsystem [MemoryElementName].

Explanation: This message is for the use case when an implementation has detected that the Memory Logging Limit has been Removed.

May also be shown as 816f050c202cffff or 0x816f050c202cffff

Severity: Info

Alert Category: Warning - Memory

Serviceable: No

CIM Information: **Prefix:** PLAT and **ID:** 0145

SNMP Trap ID: 43

Automatically notify Support: No

User response: This is a UEFI detected event. The UEFI diagnostic code for this event can be found in the logged IMM message text. Please refer to the UEFI diagnostic code in the "UEFI diagnostic code" section of the Information Center for the appropriate user response.

816f050c-202dffff Memory Logging Limit Removed for [PhysicalMemoryElementName] on Subsystem [MemoryElementName].

Explanation: This message is for the use case when an implementation has detected that the Memory Logging Limit has been Removed.

May also be shown as 816f050c202dffff or 0x816f050c202dffff

Severity: Info

Alert Category: Warning - Memory

Serviceable: No

CIM Information: **Prefix:** PLAT and **ID:** 0145

SNMP Trap ID: 43

Automatically notify Support: No

User response: This is a UEFI detected event. The UEFI diagnostic code for this event can be found in the logged IMM message text. Please refer to the UEFI diagnostic code in the "UEFI diagnostic code" section of the Information Center for the appropriate user response.

816f050c-202effff Memory Logging Limit Removed for [PhysicalMemoryElementName] on Subsystem [MemoryElementName].

Explanation: This message is for the use case when an implementation has detected that the Memory Logging Limit has been Removed.

May also be shown as 816f050c202effff or 0x816f050c202effff

Severity: Info

Alert Category: Warning - Memory

Serviceable: No

CIM Information: **Prefix:** PLAT and **ID:** 0145

SNMP Trap ID: 43

Automatically notify Support: No

User response: This is a UEFI detected event. The UEFI diagnostic code for this event can be found in the logged IMM message text. Please refer to the UEFI diagnostic code in the "UEFI diagnostic code" section of the Information Center for the appropriate user response.

816f050c-202fffff Memory Logging Limit Removed for [PhysicalMemoryElementName] on Subsystem [MemoryElementName].

Explanation: This message is for the use case when an implementation has detected that the Memory Logging Limit has been Removed.

May also be shown as 816f050c202fffff or 0x816f050c202fffff

Severity: Info

Alert Category: Warning - Memory

Serviceable: No

CIM Information: **Prefix:** PLAT and **ID:** 0145

SNMP Trap ID: 43

Automatically notify Support: No

User response: This is a UEFI detected event. The UEFI diagnostic code for this event can be found in the logged IMM message text. Please refer to the UEFI diagnostic code in the "UEFI diagnostic code" section of the Information Center for the appropriate user response.

816f050c-2030ffff Memory Logging Limit Removed for [PhysicalMemoryElementName] on Subsystem [MemoryElementName].

Explanation: This message is for the use case when an implementation has detected that the Memory Logging Limit has been Removed.

May also be shown as 816f050c2030ffff or 0x816f050c2030ffff

Severity: Info

Alert Category: Warning - Memory

Serviceable: No

CIM Information: **Prefix:** PLAT and **ID:** 0145

SNMP Trap ID: 43

Automatically notify Support: No

User response: This is a UEFI detected event. The UEFI diagnostic code for this event can be found in the logged IMM message text. Please refer to the UEFI diagnostic code in the "UEFI diagnostic code" section of the Information Center for the appropriate user response.

816f050c-2581ffff Memory Logging Limit Removed for [PhysicalMemoryElementName] on Subsystem [MemoryElementName].

Explanation: This message is for the use case when an implementation has detected that the Memory Logging Limit has been Removed. All DIMMs. One of the DIMMs.

May also be shown as 816f050c2581ffff or 0x816f050c2581ffff

Severity: Info

Alert Category: Warning - Memory

Serviceable: No

CIM Information: **Prefix:** PLAT and **ID:** 0145

SNMP Trap ID: 43

Automatically notify Support: No

User response: This is a UEFI detected event. The UEFI diagnostic code for this event can be found in the logged IMM message text. Please refer to the UEFI diagnostic code in the "UEFI diagnostic code" section of the Information Center for the appropriate user response.

816f050d-0400ffff Critical Array [ComputerSystemElementName] has deasserted.

Explanation: The RAID array is no longer in a critical condition.

May also be shown as 816f050d0400ffff or 0x816f050d0400ffff

Severity: Info

Alert Category: Critical - Hard Disk drive

Serviceable: No

CIM Information: **Prefix:** PLAT and **ID:** 0175

SNMP Trap ID: 5

Automatically notify Support: No

User response: Information only; no action is required.

816f050d-0401ffff Critical Array [ComputerSystemElementName] has deasserted.

Explanation: The RAID array is no longer in a critical condition.

May also be shown as 816f050d0401ffff or 0x816f050d0401ffff

Severity: Info

Alert Category: Critical - Hard Disk drive

Serviceable: No

CIM Information: **Prefix:** PLAT and **ID:** 0175

SNMP Trap ID: 5

Automatically notify Support: No

User response: Information only; no action is required.

816f050d-0402ffff Critical Array [ComputerSystemElementName] has deasserted.

Explanation: The RAID array is no longer in a critical condition.

May also be shown as 816f050d0402ffff or 0x816f050d0402ffff

Severity: Info

Alert Category: Critical - Hard Disk drive

Serviceable: No

CIM Information: **Prefix:** PLAT and **ID:** 0175

SNMP Trap ID: 5

Automatically notify Support: No

User response: Information only; no action is required.

816f050d-0403ffff Critical Array [ComputerSystemElementName] has deasserted.

Explanation: The RAID array is no longer in a critical condition.

May also be shown as 816f050d0403ffff or 0x816f050d0403ffff

Severity: Info

Alert Category: Critical - Hard Disk drive

Serviceable: No

CIM Information: **Prefix:** PLAT and **ID:** 0175

SNMP Trap ID: 5

Automatically notify Support: No

User response: Information only; no action is required.

816f050d-0404ffff Critical Array [ComputerSystemElementName] has deasserted.

Explanation: The RAID array is no longer in a critical condition.

May also be shown as 816f050d0404ffff or 0x816f050d0404ffff

Severity: Info

Alert Category: Critical - Hard Disk drive

Serviceable: No

CIM Information: **Prefix:** PLAT and **ID:** 0175

SNMP Trap ID: 5

Automatically notify Support: No

User response: Information only; no action is required.

816f050d-0405ffff Critical Array [ComputerSystemElementName] has deasserted.

Explanation: The RAID array is no longer in a critical condition.

May also be shown as 816f050d0405ffff or 0x816f050d0405ffff

Severity: Info

Alert Category: Critical - Hard Disk drive

Serviceable: No

CIM Information: **Prefix:** PLAT and **ID:** 0175

SNMP Trap ID: 5

Automatically notify Support: No

User response: Information only; no action is required.

816f050d-0406ffff Critical Array [ComputerSystemElementName] has deasserted.

Explanation: The RAID array is no longer in a critical condition.

May also be shown as 816f050d0406ffff or 0x816f050d0406ffff

Severity: Info

Alert Category: Critical - Hard Disk drive

Serviceable: No

CIM Information: **Prefix:** PLAT and **ID:** 0175

SNMP Trap ID: 5

Automatically notify Support: No

User response: Information only; no action is required.

816f050d-0407ffff Critical Array [ComputerSystemElementName] has deasserted.

Explanation: The RAID array is no longer in a critical condition.

May also be shown as 816f050d0407ffff or 0x816f050d0407ffff

Severity: Info

Alert Category: Critical - Hard Disk drive

Serviceable: No

CIM Information: **Prefix:** PLAT and **ID:** 0175

SNMP Trap ID: 5

Automatically notify Support: No

User response: Information only; no action is required.

816f0513-2582ffff A PCI SERR on system [ComputerSystemElementName] has deasserted.

Explanation: This message is for the use case when an implementation has detected a PCI SERR deassertion. All PCI Error. One of PCI Error. PCIs.

May also be shown as 816f05132582ffff or 0x816f05132582ffff

Severity: Info

Alert Category: Critical - Other

Serviceable: No

CIM Information: **Prefix:** PLAT and **ID:** 0235

SNMP Trap ID: 50

Automatically notify Support: No

User response: This is a UEFI detected event. The UEFI diagnostic code for this event can be found in the logged IMM message text. Please refer to the UEFI diagnostic code in the "UEFI diagnostic code" section of the Information Center for the appropriate user response.

816f0607-0301ffff An SM BIOS Uncorrectable CPU complex error for [ProcessorElementName] has deasserted.

Explanation: This message is for the use case when an SM BIOS Uncorrectable CPU complex error has deasserted.

May also be shown as 816f06070301ffff or 0x816f06070301ffff

Severity: Info

Alert Category: Critical - CPU

Serviceable: No

CIM Information: **Prefix:** PLAT and **ID:** 0817

SNMP Trap ID: 40

Automatically notify Support: No

User response: This is a UEFI detected event. The UEFI diagnostic code for this event can be found in the logged IMM message text. Please refer to the UEFI diagnostic code in the "UEFI diagnostic code" section of the Information Center for the appropriate user response.

816f0607-0302ffff An SM BIOS Uncorrectable CPU complex error for [ProcessorElementName] has deasserted.

Explanation: This message is for the use case when an SM BIOS Uncorrectable CPU complex error has deasserted.

May also be shown as 816f06070302ffff or 0x816f06070302ffff

Severity: Info

Alert Category: Critical - CPU

Serviceable: No

CIM Information: **Prefix:** PLAT and **ID:** 0817

SNMP Trap ID: 40

Automatically notify Support: No

User response: This is a UEFI detected event. The UEFI diagnostic code for this event can be found in the logged IMM message text. Please refer to the UEFI diagnostic code in the "UEFI diagnostic code" section of the Information Center for the appropriate user response.

816f0607-0303ffff An SM BIOS Uncorrectable CPU complex error for [ProcessorElementName] has deasserted.

Explanation: This message is for the use case when an SM BIOS Uncorrectable CPU complex error has deasserted.

May also be shown as 816f06070303ffff or 0x816f06070303ffff

Severity: Info

Alert Category: Critical - CPU

Serviceable: No

CIM Information: **Prefix:** PLAT and **ID:** 0817

SNMP Trap ID: 40

Automatically notify Support: No

User response: This is a UEFI detected event. The UEFI diagnostic code for this event can be found in the logged IMM message text. Please refer to the UEFI diagnostic code in the "UEFI diagnostic code" section of the Information Center for the appropriate user response.

816f0607-0304ffff An SM BIOS Uncorrectable CPU complex error for [ProcessorElementName] has deasserted.

Explanation: This message is for the use case when an SM BIOS Uncorrectable CPU complex error has deasserted.

May also be shown as 816f06070304ffff or 0x816f06070304ffff

Severity: Info

Alert Category: Critical - CPU

Serviceable: No

CIM Information: **Prefix:** PLAT and **ID:** 0817

SNMP Trap ID: 40

Automatically notify Support: No

User response: This is a UEFI detected event. The UEFI diagnostic code for this event can be found in the logged

IMM message text. Please refer to the UEFI diagnostic code in the "UEFI diagnostic code" section of the Information Center for the appropriate user response.

816f0607-2584ffff An SM BIOS Uncorrectable CPU complex error for [ProcessorElementName] has deasserted.

Explanation: This message is for the use case when an SM BIOS Uncorrectable CPU complex error has deasserted. All CPUs. One of CPUs.

May also be shown as 816f06072584ffff or 0x816f06072584ffff

Severity: Info

Alert Category: Critical - CPU

Serviceable: No

CIM Information: **Prefix:** PLAT and **ID:** 0817

SNMP Trap ID: 40

Automatically notify Support: No

User response: This is a UEFI detected event. The UEFI diagnostic code for this event can be found in the logged IMM message text. Please refer to the UEFI diagnostic code in the "UEFI diagnostic code" section of the Information Center for the appropriate user response.

816f060d-0400ffff Array in system [ComputerSystemElementName] has been restored.

Explanation: The failed RAID array has been restored.

May also be shown as 816f060d0400ffff or 0x816f060d0400ffff

Severity: Info

Alert Category: Critical - Hard Disk drive

Serviceable: No

CIM Information: **Prefix:** PLAT and **ID:** 0177

SNMP Trap ID: 5

Automatically notify Support: No

User response: Information only; no action is required.

816f060d-0401ffff Array in system [ComputerSystemElementName] has been restored.

Explanation: The failed RAID array has been restored.

May also be shown as 816f060d0401ffff or 0x816f060d0401ffff

Severity: Info

Alert Category: Critical - Hard Disk drive

Serviceable: No

CIM Information: **Prefix:** PLAT and **ID:** 0177

SNMP Trap ID: 5

Automatically notify Support: No

User response: Information only; no action is required.

816f060d-0402ffff Array in system [ComputerSystemElementName] has been restored.

Explanation: The failed RAID array has been restored.

May also be shown as 816f060d0402ffff or 0x816f060d0402ffff

Severity: Info

Alert Category: Critical - Hard Disk drive

Serviceable: No

CIM Information: **Prefix:** PLAT and **ID:** 0177

SNMP Trap ID: 5

Automatically notify Support: No

User response: Information only; no action is required.

816f060d-0403ffff Array in system [ComputerSystemElementName] has been restored.

Explanation: The failed RAID array has been restored.

May also be shown as 816f060d0403ffff or 0x816f060d0403ffff

Severity: Info

Alert Category: Critical - Hard Disk drive

Serviceable: No

CIM Information: **Prefix:** PLAT and **ID:** 0177

SNMP Trap ID: 5

Automatically notify Support: No

User response: Information only; no action is required.

816f060d-0404ffff Array in system [ComputerSystemElementName] has been restored.

Explanation: The failed RAID array has been restored.

May also be shown as 816f060d0404ffff or 0x816f060d0404ffff

Severity: Info

Alert Category: Critical - Hard Disk drive

Serviceable: No

CIM Information: **Prefix:** PLAT and **ID:** 0177

SNMP Trap ID: 5

Automatically notify Support: No

User response: Information only; no action is required.

816f060d-0405ffff Array in system [ComputerSystemElementName] has been restored.

Explanation: The failed RAID array has been restored.

May also be shown as 816f060d0405ffff or 0x816f060d0405ffff

Severity: Info

Alert Category: Critical - Hard Disk drive

Serviceable: No

CIM Information: **Prefix:** PLAT and **ID:** 0177

SNMP Trap ID: 5

Automatically notify Support: No

User response: Information only; no action is required.

816f060d-0406ffff Array in system [ComputerSystemElementName] has been restored.

Explanation: The failed RAID array has been restored.

May also be shown as 816f060d0406ffff or 0x816f060d0406ffff

Severity: Info

Alert Category: Critical - Hard Disk drive

Serviceable: No

CIM Information: **Prefix:** PLAT and **ID:** 0177

SNMP Trap ID: 5

Automatically notify Support: No

User response: Information only; no action is required.

816f060d-0407ffff Array in system [ComputerSystemElementName] has been restored.

Explanation: The failed RAID array has been restored.

May also be shown as 816f060d0407ffff or 0x816f060d0407ffff

Severity: Info

Alert Category: Critical - Hard Disk drive

Serviceable: No

CIM Information: **Prefix:** PLAT and **ID:** 0177

SNMP Trap ID: 5

Automatically notify Support: No

User response: Information only; no action is required.

816f070c-2001ffff Configuration error for [PhysicalMemoryElementName] on Subsystem [MemoryElementName]has deasserted.

Explanation: This message is for the use case when an implementation has detected a Memory DIMM configuration error has deasserted.

May also be shown as 816f070c2001ffff or 0x816f070c2001ffff

Severity: Info

Alert Category: Critical - Memory

Serviceable: No

CIM Information: **Prefix:** PLAT and **ID:** 0127

SNMP Trap ID: 41

Automatically notify Support: No

User response: This is a UEFI detected event. The UEFI diagnostic code for this event can be found in the logged IMM message text. Please refer to the UEFI diagnostic code in the "UEFI diagnostic code" section of the Information Center for the appropriate user response.

816f070c-2002ffff Configuration error for [PhysicalMemoryElementName] on Subsystem [MemoryElementName]has deasserted.

Explanation: This message is for the use case when an implementation has detected a Memory DIMM configuration error has deasserted.

May also be shown as 816f070c2002ffff or 0x816f070c2002ffff

Severity: Info

Alert Category: Critical - Memory

Serviceable: No

CIM Information: **Prefix:** PLAT and **ID:** 0127

SNMP Trap ID: 41

Automatically notify Support: No

User response: This is a UEFI detected event. The UEFI diagnostic code for this event can be found in the logged IMM message text. Please refer to the UEFI diagnostic code in the "UEFI diagnostic code" section of the Information Center for the appropriate user response.

816f070c-2003ffff Configuration error for [PhysicalMemoryElementName] on Subsystem [MemoryElementName]has deasserted.

Explanation: This message is for the use case when an implementation has detected a Memory DIMM configuration error has deasserted.

May also be shown as 816f070c2003ffff or 0x816f070c2003ffff

Severity: Info

Alert Category: Critical - Memory

Serviceable: No

CIM Information: **Prefix:** PLAT and **ID:** 0127

SNMP Trap ID: 41

Automatically notify Support: No

User response: This is a UEFI detected event. The UEFI diagnostic code for this event can be found in the logged IMM message text. Please refer to the UEFI diagnostic code in the "UEFI diagnostic code" section of the Information Center for the appropriate user response.

816f070c-2004ffff Configuration error for [PhysicalMemoryElementName] on Subsystem [MemoryElementName]has deasserted.

Explanation: This message is for the use case when an implementation has detected a Memory DIMM configuration error has deasserted.

May also be shown as 816f070c2004ffff or 0x816f070c2004ffff

Severity: Info

Alert Category: Critical - Memory

Serviceable: No

CIM Information: **Prefix:** PLAT and **ID:** 0127

SNMP Trap ID: 41

Automatically notify Support: No

User response: This is a UEFI detected event. The UEFI diagnostic code for this event can be found in the logged IMM message text. Please refer to the UEFI diagnostic code in the "UEFI diagnostic code" section of the Information Center for the appropriate user response.

816f070c-2005ffff Configuration error for [PhysicalMemoryElementName] on Subsystem [MemoryElementName]has deasserted.

Explanation: This message is for the use case when an implementation has detected a Memory DIMM configuration error has deasserted.

May also be shown as 816f070c2005ffff or 0x816f070c2005ffff

Severity: Info

Alert Category: Critical - Memory

Serviceable: No

CIM Information: **Prefix:** PLAT and **ID:** 0127

SNMP Trap ID: 41

Automatically notify Support: No

User response: This is a UEFI detected event. The UEFI diagnostic code for this event can be found in the logged IMM message text. Please refer to the UEFI diagnostic code in the "UEFI diagnostic code" section of the Information Center for the appropriate user response.

816f070c-2006ffff Configuration error for [PhysicalMemoryElementName] on Subsystem [MemoryElementName]has deasserted.

Explanation: This message is for the use case when an implementation has detected a Memory DIMM configuration error has deasserted.

May also be shown as 816f070c2006ffff or 0x816f070c2006ffff

Severity: Info

Alert Category: Critical - Memory

Serviceable: No

CIM Information: **Prefix:** PLAT and **ID:** 0127

SNMP Trap ID: 41

Automatically notify Support: No

User response: This is a UEFI detected event. The UEFI diagnostic code for this event can be found in the logged IMM message text. Please refer to the UEFI diagnostic code in the "UEFI diagnostic code" section of the Information Center for the appropriate user response.

816f070c-2007ffff Configuration error for [PhysicalMemoryElementName] on Subsystem [MemoryElementName]has deasserted.

Explanation: This message is for the use case when an implementation has detected a Memory DIMM configuration error has deasserted.

May also be shown as 816f070c2007ffff or 0x816f070c2007ffff

Severity: Info

Alert Category: Critical - Memory

Serviceable: No

CIM Information: **Prefix:** PLAT and **ID:** 0127

SNMP Trap ID: 41

Automatically notify Support: No

User response: This is a UEFI detected event. The UEFI diagnostic code for this event can be found in the logged IMM message text. Please refer to the UEFI diagnostic code in the "UEFI diagnostic code" section of the Information Center for the appropriate user response.

816f070c-2008ffff Configuration error for [PhysicalMemoryElementName] on Subsystem [MemoryElementName]has deasserted.

Explanation: This message is for the use case when an implementation has detected a Memory DIMM configuration error has deasserted.

May also be shown as 816f070c2008ffff or 0x816f070c2008ffff

Severity: Info

Alert Category: Critical - Memory

Serviceable: No

CIM Information: **Prefix:** PLAT and **ID:** 0127

SNMP Trap ID: 41

Automatically notify Support: No

User response: This is a UEFI detected event. The UEFI diagnostic code for this event can be found in the logged IMM message text. Please refer to the UEFI diagnostic code in the "UEFI diagnostic code" section of the Information Center for the appropriate user response.

816f070c-2009ffff Configuration error for [PhysicalMemoryElementName] on Subsystem [MemoryElementName]has deasserted.

Explanation: This message is for the use case when an implementation has detected a Memory DIMM configuration error has deasserted.

May also be shown as 816f070c2009ffff or 0x816f070c2009ffff

Severity: Info

Alert Category: Critical - Memory

Serviceable: No

CIM Information: **Prefix:** PLAT and **ID:** 0127

SNMP Trap ID: 41

Automatically notify Support: No

User response: This is a UEFI detected event. The UEFI diagnostic code for this event can be found in the logged IMM message text. Please refer to the UEFI diagnostic code in the "UEFI diagnostic code" section of the Information Center for the appropriate user response.

816f070c-200affff Configuration error for [PhysicalMemoryElementName] on Subsystem [MemoryElementName]has deasserted.

Explanation: This message is for the use case when an implementation has detected a Memory DIMM configuration error has deasserted.

May also be shown as 816f070c200affff or 0x816f070c200affff

Severity: Info

Alert Category: Critical - Memory

Serviceable: No

CIM Information: **Prefix:** PLAT and **ID:** 0127

SNMP Trap ID: 41

Automatically notify Support: No

User response: This is a UEFI detected event. The UEFI diagnostic code for this event can be found in the logged IMM message text. Please refer to the UEFI diagnostic code in the "UEFI diagnostic code" section of the Information Center for the appropriate user response.

816f070c-200bffff Configuration error for [PhysicalMemoryElementName] on Subsystem [MemoryElementName]has deasserted.

Explanation: This message is for the use case when an implementation has detected a Memory DIMM configuration error has deasserted.

May also be shown as 816f070c200bffff or 0x816f070c200bffff

Severity: Info

Alert Category: Critical - Memory

Serviceable: No

CIM Information: **Prefix:** PLAT and **ID:** 0127

SNMP Trap ID: 41

Automatically notify Support: No

User response: This is a UEFI detected event. The UEFI diagnostic code for this event can be found in the logged IMM message text. Please refer to the UEFI diagnostic code in the "UEFI diagnostic code" section of the Information Center for the appropriate user response.

816f070c-200cffff Configuration error for [PhysicalMemoryElementName] on Subsystem [MemoryElementName]has deasserted.

Explanation: This message is for the use case when an implementation has detected a Memory DIMM configuration error has deasserted.

May also be shown as 816f070c200cffff or 0x816f070c200cffff

Severity: Info

Alert Category: Critical - Memory

Serviceable: No

CIM Information: **Prefix:** PLAT and **ID:** 0127

SNMP Trap ID: 41

Automatically notify Support: No

User response: This is a UEFI detected event. The UEFI diagnostic code for this event can be found in the logged IMM message text. Please refer to the UEFI diagnostic code in the "UEFI diagnostic code" section of the Information Center for the appropriate user response.

816f070c-200dffff Configuration error for [PhysicalMemoryElementName] on Subsystem [MemoryElementName]has deasserted.

Explanation: This message is for the use case when an implementation has detected a Memory DIMM configuration error has deasserted.

May also be shown as 816f070c200dffff or 0x816f070c200dffff

Severity: Info

Alert Category: Critical - Memory

Serviceable: No

CIM Information: **Prefix:** PLAT and **ID:** 0127

SNMP Trap ID: 41

Automatically notify Support: No

User response: This is a UEFI detected event. The UEFI diagnostic code for this event can be found in the logged IMM message text. Please refer to the UEFI diagnostic code in the "UEFI diagnostic code" section of the Information Center for the appropriate user response.

816f070c-200effff Configuration error for [PhysicalMemoryElementName] on Subsystem [MemoryElementName]has deasserted.

Explanation: This message is for the use case when an implementation has detected a Memory DIMM configuration error has deasserted.

May also be shown as 816f070c200effff or 0x816f070c200effff

Severity: Info

Alert Category: Critical - Memory

Serviceable: No

CIM Information: **Prefix:** PLAT and **ID:** 0127

SNMP Trap ID: 41

Automatically notify Support: No

User response: This is a UEFI detected event. The UEFI diagnostic code for this event can be found in the logged IMM message text. Please refer to the UEFI diagnostic code in the "UEFI diagnostic code" section of the Information Center for the appropriate user response.

816f070c-200fffff Configuration error for [PhysicalMemoryElementName] on Subsystem [MemoryElementName]has deasserted.

Explanation: This message is for the use case when an implementation has detected a Memory DIMM configuration error has deasserted.

May also be shown as 816f070c200fffff or 0x816f070c200fffff

Severity: Info

Alert Category: Critical - Memory

Serviceable: No

CIM Information: **Prefix:** PLAT and **ID:** 0127

SNMP Trap ID: 41

Automatically notify Support: No

User response: This is a UEFI detected event. The UEFI diagnostic code for this event can be found in the logged IMM message text. Please refer to the UEFI diagnostic code in the "UEFI diagnostic code" section of the Information Center for the appropriate user response.

816f070c-2010ffff Configuration error for [PhysicalMemoryElementName] on Subsystem [MemoryElementName]has deasserted.

Explanation: This message is for the use case when an implementation has detected a Memory DIMM configuration error has deasserted.

May also be shown as 816f070c2010ffff or 0x816f070c2010ffff

Severity: Info

Alert Category: Critical - Memory

Serviceable: No

CIM Information: **Prefix:** PLAT and **ID:** 0127

SNMP Trap ID: 41

Automatically notify Support: No

User response: This is a UEFI detected event. The UEFI diagnostic code for this event can be found in the logged IMM message text. Please refer to the UEFI diagnostic code in the "UEFI diagnostic code" section of the Information Center for the appropriate user response.

816f070c-2011ffff Configuration error for [PhysicalMemoryElementName] on Subsystem [MemoryElementName]has deasserted.

Explanation: This message is for the use case when an implementation has detected a Memory DIMM configuration error has deasserted.

May also be shown as 816f070c2011ffff or 0x816f070c2011ffff

Severity: Info

Alert Category: Critical - Memory

Serviceable: No

CIM Information: **Prefix:** PLAT and **ID:** 0127

SNMP Trap ID: 41

Automatically notify Support: No

User response: This is a UEFI detected event. The UEFI diagnostic code for this event can be found in the logged IMM message text. Please refer to the UEFI diagnostic code in the "UEFI diagnostic code" section of the Information Center for the appropriate user response.

816f070c-2012ffff Configuration error for [PhysicalMemoryElementName] on Subsystem [MemoryElementName]has deasserted.

Explanation: This message is for the use case when an implementation has detected a Memory DIMM configuration error has deasserted.

May also be shown as 816f070c2012ffff or 0x816f070c2012ffff

Severity: Info

Alert Category: Critical - Memory

Serviceable: No

CIM Information: **Prefix:** PLAT and **ID:** 0127

SNMP Trap ID: 41

Automatically notify Support: No

User response: This is a UEFI detected event. The UEFI diagnostic code for this event can be found in the logged IMM message text. Please refer to the UEFI diagnostic code in the "UEFI diagnostic code" section of the Information Center for the appropriate user response.

816f070c-2013ffff Configuration error for [PhysicalMemoryElementName] on Subsystem [MemoryElementName]has deasserted.

Explanation: This message is for the use case when an implementation has detected a Memory DIMM configuration error has deasserted.

May also be shown as 816f070c2013ffff or 0x816f070c2013ffff

Severity: Info

Alert Category: Critical - Memory

Serviceable: No

CIM Information: **Prefix:** PLAT and **ID:** 0127

SNMP Trap ID: 41

Automatically notify Support: No

User response: This is a UEFI detected event. The UEFI diagnostic code for this event can be found in the logged IMM message text. Please refer to the UEFI diagnostic code in the "UEFI diagnostic code" section of the Information Center for the appropriate user response.

816f070c-2014ffff Configuration error for [PhysicalMemoryElementName] on Subsystem [MemoryElementName]has deasserted.

Explanation: This message is for the use case when an implementation has detected a Memory DIMM configuration error has deasserted.

May also be shown as 816f070c2014ffff or 0x816f070c2014ffff

Severity: Info

Alert Category: Critical - Memory

Serviceable: No

CIM Information: **Prefix:** PLAT and **ID:** 0127

SNMP Trap ID: 41

Automatically notify Support: No

User response: This is a UEFI detected event. The UEFI diagnostic code for this event can be found in the logged IMM message text. Please refer to the UEFI diagnostic code in the "UEFI diagnostic code" section of the Information Center for the appropriate user response.

816f070c-2015ffff Configuration error for [PhysicalMemoryElementName] on Subsystem [MemoryElementName]has deasserted.

Explanation: This message is for the use case when an implementation has detected a Memory DIMM configuration error has deasserted.

May also be shown as 816f070c2015ffff or 0x816f070c2015ffff

Severity: Info

Alert Category: Critical - Memory

Serviceable: No

CIM Information: **Prefix:** PLAT and **ID:** 0127

SNMP Trap ID: 41

Automatically notify Support: No

User response: This is a UEFI detected event. The UEFI diagnostic code for this event can be found in the logged IMM message text. Please refer to the UEFI diagnostic code in the "UEFI diagnostic code" section of the Information Center for the appropriate user response.

816f070c-2016ffff Configuration error for [PhysicalMemoryElementName] on Subsystem [MemoryElementName]has deasserted.

Explanation: This message is for the use case when an implementation has detected a Memory DIMM configuration error has deasserted.

May also be shown as 816f070c2016ffff or 0x816f070c2016ffff

Severity: Info

Alert Category: Critical - Memory

Serviceable: No

CIM Information: **Prefix:** PLAT and **ID:** 0127

SNMP Trap ID: 41

Automatically notify Support: No

User response: This is a UEFI detected event. The UEFI diagnostic code for this event can be found in the logged IMM message text. Please refer to the UEFI diagnostic code in the "UEFI diagnostic code" section of the Information Center for the appropriate user response.

816f070c-2017ffff Configuration error for [PhysicalMemoryElementName] on Subsystem [MemoryElementName]has deasserted.

Explanation: This message is for the use case when an implementation has detected a Memory DIMM configuration error has deasserted.

May also be shown as 816f070c2017ffff or 0x816f070c2017ffff

Severity: Info

Alert Category: Critical - Memory

Serviceable: No

CIM Information: **Prefix:** PLAT and **ID:** 0127

SNMP Trap ID: 41

Automatically notify Support: No

User response: This is a UEFI detected event. The UEFI diagnostic code for this event can be found in the logged IMM message text. Please refer to the UEFI diagnostic code in the "UEFI diagnostic code" section of the Information Center for the appropriate user response.

816f070c-2018ffff Configuration error for [PhysicalMemoryElementName] on Subsystem [MemoryElementName]has deasserted.

Explanation: This message is for the use case when an implementation has detected a Memory DIMM configuration error has deasserted.

May also be shown as 816f070c2018ffff or 0x816f070c2018ffff

Severity: Info

Alert Category: Critical - Memory

Serviceable: No

CIM Information: **Prefix:** PLAT and **ID:** 0127

SNMP Trap ID: 41

Automatically notify Support: No

User response: This is a UEFI detected event. The UEFI diagnostic code for this event can be found in the logged IMM message text. Please refer to the UEFI diagnostic code in the "UEFI diagnostic code" section of the Information Center for the appropriate user response.

816f070c-2019ffff Configuration error for [PhysicalMemoryElementName] on Subsystem [MemoryElementName]has deasserted.

Explanation: This message is for the use case when an implementation has detected a Memory DIMM configuration error has deasserted.

May also be shown as 816f070c2019ffff or 0x816f070c2019ffff

Severity: Info

Alert Category: Critical - Memory

Serviceable: No

CIM Information: **Prefix:** PLAT and **ID:** 0127

SNMP Trap ID: 41

Automatically notify Support: No

User response: This is a UEFI detected event. The UEFI diagnostic code for this event can be found in the logged IMM message text. Please refer to the UEFI diagnostic code in the "UEFI diagnostic code" section of the Information Center for the appropriate user response.

816f070c-201affff Configuration error for [PhysicalMemoryElementName] on Subsystem [MemoryElementName]has deasserted.

Explanation: This message is for the use case when an implementation has detected a Memory DIMM configuration error has deasserted.

May also be shown as 816f070c201affff or 0x816f070c201affff

Severity: Info

Alert Category: Critical - Memory

Serviceable: No

CIM Information: **Prefix:** PLAT and **ID:** 0127

SNMP Trap ID: 41

Automatically notify Support: No

User response: This is a UEFI detected event. The UEFI diagnostic code for this event can be found in the logged IMM message text. Please refer to the UEFI diagnostic code in the "UEFI diagnostic code" section of the Information Center for the appropriate user response.

816f070c-201bffff Configuration error for [PhysicalMemoryElementName] on Subsystem [MemoryElementName]has deasserted.

Explanation: This message is for the use case when an implementation has detected a Memory DIMM configuration error has deasserted.

May also be shown as 816f070c201bffff or 0x816f070c201bffff

Severity: Info

Alert Category: Critical - Memory

Serviceable: No

CIM Information: **Prefix:** PLAT and **ID:** 0127

SNMP Trap ID: 41

Automatically notify Support: No

User response: This is a UEFI detected event. The UEFI diagnostic code for this event can be found in the logged IMM message text. Please refer to the UEFI diagnostic code in the "UEFI diagnostic code" section of the Information Center for the appropriate user response.

816f070c-201cffff Configuration error for [PhysicalMemoryElementName] on Subsystem [MemoryElementName]has deasserted.

Explanation: This message is for the use case when an implementation has detected a Memory DIMM configuration error has deasserted.

May also be shown as 816f070c201cffff or 0x816f070c201cffff

Severity: Info

Alert Category: Critical - Memory

Serviceable: No

CIM Information: **Prefix:** PLAT and **ID:** 0127

SNMP Trap ID: 41

Automatically notify Support: No

User response: This is a UEFI detected event. The UEFI diagnostic code for this event can be found in the logged IMM message text. Please refer to the UEFI diagnostic code in the "UEFI diagnostic code" section of the Information Center for the appropriate user response.

816f070c-201dffff Configuration error for [PhysicalMemoryElementName] on Subsystem [MemoryElementName]has deasserted.

Explanation: This message is for the use case when an implementation has detected a Memory DIMM configuration error has deasserted.

May also be shown as 816f070c201dffff or 0x816f070c201dffff

Severity: Info

Alert Category: Critical - Memory

Serviceable: No

CIM Information: **Prefix:** PLAT and **ID:** 0127

SNMP Trap ID: 41

Automatically notify Support: No

User response: This is a UEFI detected event. The UEFI diagnostic code for this event can be found in the logged IMM message text. Please refer to the UEFI diagnostic code in the "UEFI diagnostic code" section of the Information Center for the appropriate user response.

816f070c-201effff Configuration error for [PhysicalMemoryElementName] on Subsystem [MemoryElementName]has deasserted.

Explanation: This message is for the use case when an implementation has detected a Memory DIMM configuration error has deasserted.

May also be shown as 816f070c201effff or 0x816f070c201effff

Severity: Info

Alert Category: Critical - Memory

Serviceable: No

CIM Information: **Prefix:** PLAT and **ID:** 0127

SNMP Trap ID: 41

Automatically notify Support: No

User response: This is a UEFI detected event. The UEFI diagnostic code for this event can be found in the logged IMM message text. Please refer to the UEFI diagnostic code in the "UEFI diagnostic code" section of the Information Center for the appropriate user response.

816f070c-201fffff Configuration error for [PhysicalMemoryElementName] on Subsystem [MemoryElementName]has deasserted.

Explanation: This message is for the use case when an implementation has detected a Memory DIMM configuration error has deasserted.

May also be shown as 816f070c201fffff or 0x816f070c201fffff

Severity: Info

Alert Category: Critical - Memory

Serviceable: No

CIM Information: **Prefix:** PLAT and **ID:** 0127

SNMP Trap ID: 41

Automatically notify Support: No

User response: This is a UEFI detected event. The UEFI diagnostic code for this event can be found in the logged IMM message text. Please refer to the UEFI diagnostic code in the "UEFI diagnostic code" section of the Information Center for the appropriate user response.

816f070c-2020ffff Configuration error for [PhysicalMemoryElementName] on Subsystem [MemoryElementName]has deasserted.

Explanation: This message is for the use case when an implementation has detected a Memory DIMM configuration error has deasserted.

May also be shown as 816f070c2020ffff or 0x816f070c2020ffff

Severity: Info

Alert Category: Critical - Memory

Serviceable: No

CIM Information: **Prefix:** PLAT and **ID:** 0127

SNMP Trap ID: 41

Automatically notify Support: No

User response: This is a UEFI detected event. The UEFI diagnostic code for this event can be found in the logged IMM message text. Please refer to the UEFI diagnostic code in the "UEFI diagnostic code" section of the Information Center for the appropriate user response.

816f070c-2021ffff Configuration error for [PhysicalMemoryElementName] on Subsystem [MemoryElementName]has deasserted.

Explanation: This message is for the use case when an implementation has detected a Memory DIMM configuration error has deasserted.

May also be shown as 816f070c2021ffff or 0x816f070c2021ffff

Severity: Info

Alert Category: Critical - Memory

Serviceable: No

CIM Information: **Prefix:** PLAT and **ID:** 0127

SNMP Trap ID: 41

Automatically notify Support: No

User response: This is a UEFI detected event. The UEFI diagnostic code for this event can be found in the logged IMM message text. Please refer to the UEFI diagnostic code in the "UEFI diagnostic code" section of the Information Center for the appropriate user response.

816f070c-2022ffff Configuration error for [PhysicalMemoryElementName] on Subsystem [MemoryElementName]has deasserted.

Explanation: This message is for the use case when an implementation has detected a Memory DIMM configuration error has deasserted.

May also be shown as 816f070c2022ffff or 0x816f070c2022ffff

Severity: Info

Alert Category: Critical - Memory

Serviceable: No

CIM Information: **Prefix:** PLAT and **ID:** 0127

SNMP Trap ID: 41

Automatically notify Support: No

User response: This is a UEFI detected event. The UEFI diagnostic code for this event can be found in the logged IMM message text. Please refer to the UEFI diagnostic code in the "UEFI diagnostic code" section of the Information Center for the appropriate user response.

816f070c-2023ffff Configuration error for [PhysicalMemoryElementName] on Subsystem [MemoryElementName]has deasserted.

Explanation: This message is for the use case when an implementation has detected a Memory DIMM configuration error has deasserted.

May also be shown as 816f070c2023ffff or 0x816f070c2023ffff

Severity: Info

Alert Category: Critical - Memory

Serviceable: No

CIM Information: **Prefix:** PLAT and **ID:** 0127

SNMP Trap ID: 41

Automatically notify Support: No

User response: This is a UEFI detected event. The UEFI diagnostic code for this event can be found in the logged IMM message text. Please refer to the UEFI diagnostic code in the "UEFI diagnostic code" section of the Information Center for the appropriate user response.

816f070c-2024ffff Configuration error for [PhysicalMemoryElementName] on Subsystem [MemoryElementName]has deasserted.

Explanation: This message is for the use case when an implementation has detected a Memory DIMM configuration error has deasserted.

May also be shown as 816f070c2024ffff or 0x816f070c2024ffff

Severity: Info

Alert Category: Critical - Memory

Serviceable: No

CIM Information: **Prefix:** PLAT and **ID:** 0127

SNMP Trap ID: 41

Automatically notify Support: No

User response: This is a UEFI detected event. The UEFI diagnostic code for this event can be found in the logged IMM message text. Please refer to the UEFI diagnostic code in the "UEFI diagnostic code" section of the Information Center for the appropriate user response.

816f070c-2025ffff Configuration error for [PhysicalMemoryElementName] on Subsystem [MemoryElementName]has deasserted.

Explanation: This message is for the use case when an implementation has detected a Memory DIMM configuration error has deasserted.

May also be shown as 816f070c2025ffff or 0x816f070c2025ffff

Severity: Info

Alert Category: Critical - Memory

Serviceable: No

CIM Information: **Prefix:** PLAT and **ID:** 0127

SNMP Trap ID: 41

Automatically notify Support: No

User response: This is a UEFI detected event. The UEFI diagnostic code for this event can be found in the logged IMM message text. Please refer to the UEFI diagnostic code in the "UEFI diagnostic code" section of the Information Center for the appropriate user response.

816f070c-2026ffff Configuration error for [PhysicalMemoryElementName] on Subsystem [MemoryElementName]has deasserted.

Explanation: This message is for the use case when an implementation has detected a Memory DIMM configuration error has deasserted.

May also be shown as 816f070c2026ffff or 0x816f070c2026ffff

Severity: Info

Alert Category: Critical - Memory

Serviceable: No

CIM Information: **Prefix:** PLAT and **ID:** 0127

SNMP Trap ID: 41

Automatically notify Support: No

User response: This is a UEFI detected event. The UEFI diagnostic code for this event can be found in the logged IMM message text. Please refer to the UEFI diagnostic code in the "UEFI diagnostic code" section of the Information Center for the appropriate user response.

816f070c-2027ffff Configuration error for [PhysicalMemoryElementName] on Subsystem [MemoryElementName]has deasserted.

Explanation: This message is for the use case when an implementation has detected a Memory DIMM configuration error has deasserted.

May also be shown as 816f070c2027ffff or 0x816f070c2027ffff

Severity: Info

Alert Category: Critical - Memory

Serviceable: No

CIM Information: **Prefix:** PLAT and **ID:** 0127

SNMP Trap ID: 41

Automatically notify Support: No

User response: This is a UEFI detected event. The UEFI diagnostic code for this event can be found in the logged IMM message text. Please refer to the UEFI diagnostic code in the "UEFI diagnostic code" section of the Information Center for the appropriate user response.

816f070c-2028ffff Configuration error for [PhysicalMemoryElementName] on Subsystem [MemoryElementName]has deasserted.

Explanation: This message is for the use case when an implementation has detected a Memory DIMM configuration error has deasserted.

May also be shown as 816f070c2028ffff or 0x816f070c2028ffff

Severity: Info

Alert Category: Critical - Memory

Serviceable: No

CIM Information: **Prefix:** PLAT and **ID:** 0127

SNMP Trap ID: 41

Automatically notify Support: No

User response: This is a UEFI detected event. The UEFI diagnostic code for this event can be found in the logged IMM message text. Please refer to the UEFI diagnostic code in the "UEFI diagnostic code" section of the Information Center for the appropriate user response.

816f070c-2029ffff Configuration error for [PhysicalMemoryElementName] on Subsystem [MemoryElementName]has deasserted.

Explanation: This message is for the use case when an implementation has detected a Memory DIMM configuration error has deasserted.

May also be shown as 816f070c2029ffff or 0x816f070c2029ffff

Severity: Info

Alert Category: Critical - Memory

Serviceable: No

CIM Information: **Prefix:** PLAT and **ID:** 0127

SNMP Trap ID: 41

Automatically notify Support: No

User response: This is a UEFI detected event. The UEFI diagnostic code for this event can be found in the logged IMM message text. Please refer to the UEFI diagnostic code in the "UEFI diagnostic code" section of the Information Center for the appropriate user response.

816f070c-202affff Configuration error for [PhysicalMemoryElementName] on Subsystem [MemoryElementName]has deasserted.

Explanation: This message is for the use case when an implementation has detected a Memory DIMM configuration error has deasserted.

May also be shown as 816f070c202affff or 0x816f070c202affff

Severity: Info

Alert Category: Critical - Memory

Serviceable: No

CIM Information: **Prefix:** PLAT and **ID:** 0127

SNMP Trap ID: 41

Automatically notify Support: No

User response: This is a UEFI detected event. The UEFI diagnostic code for this event can be found in the logged IMM message text. Please refer to the UEFI diagnostic code in the "UEFI diagnostic code" section of the Information Center for the appropriate user response.

816f070c-202bffff Configuration error for [PhysicalMemoryElementName] on Subsystem [MemoryElementName]has deasserted.

Explanation: This message is for the use case when an implementation has detected a Memory DIMM configuration error has deasserted.

May also be shown as 816f070c202bffff or 0x816f070c202bffff

Severity: Info

Alert Category: Critical - Memory

Serviceable: No

CIM Information: **Prefix:** PLAT and **ID:** 0127

SNMP Trap ID: 41

Automatically notify Support: No

User response: This is a UEFI detected event. The UEFI diagnostic code for this event can be found in the logged IMM message text. Please refer to the UEFI diagnostic code in the "UEFI diagnostic code" section of the Information Center for the appropriate user response.

816f070c-202cffff Configuration error for [PhysicalMemoryElementName] on Subsystem [MemoryElementName]has deasserted.

Explanation: This message is for the use case when an implementation has detected a Memory DIMM configuration error has deasserted.

May also be shown as 816f070c202cffff or 0x816f070c202cffff

Severity: Info

Alert Category: Critical - Memory

Serviceable: No

CIM Information: **Prefix:** PLAT and **ID:** 0127

SNMP Trap ID: 41

Automatically notify Support: No

User response: This is a UEFI detected event. The UEFI diagnostic code for this event can be found in the logged IMM message text. Please refer to the UEFI diagnostic code in the "UEFI diagnostic code" section of the Information Center for the appropriate user response.

816f070c-202dffff Configuration error for [PhysicalMemoryElementName] on Subsystem [MemoryElementName]has deasserted.

Explanation: This message is for the use case when an implementation has detected a Memory DIMM configuration error has deasserted.

May also be shown as 816f070c202dffff or 0x816f070c202dffff

Severity: Info

Alert Category: Critical - Memory

Serviceable: No

CIM Information: **Prefix:** PLAT and **ID:** 0127

SNMP Trap ID: 41

Automatically notify Support: No

User response: This is a UEFI detected event. The UEFI diagnostic code for this event can be found in the logged IMM message text. Please refer to the UEFI diagnostic code in the "UEFI diagnostic code" section of the Information Center for the appropriate user response.

816f070c-202effff Configuration error for [PhysicalMemoryElementName] on Subsystem [MemoryElementName]has deasserted.

Explanation: This message is for the use case when an implementation has detected a Memory DIMM configuration error has deasserted.

May also be shown as 816f070c202effff or 0x816f070c202effff

Severity: Info

Alert Category: Critical - Memory

Serviceable: No

CIM Information: **Prefix:** PLAT and **ID:** 0127

SNMP Trap ID: 41

Automatically notify Support: No

User response: This is a UEFI detected event. The UEFI diagnostic code for this event can be found in the logged IMM message text. Please refer to the UEFI diagnostic code in the "UEFI diagnostic code" section of the Information Center for the appropriate user response.

816f070c-202fffff Configuration error for [PhysicalMemoryElementName] on Subsystem [MemoryElementName]has deasserted.

Explanation: This message is for the use case when an implementation has detected a Memory DIMM configuration error has deasserted.

May also be shown as 816f070c202fffff or 0x816f070c202fffff

Severity: Info

Alert Category: Critical - Memory

Serviceable: No

CIM Information: **Prefix:** PLAT and **ID:** 0127

SNMP Trap ID: 41

Automatically notify Support: No

User response: This is a UEFI detected event. The UEFI diagnostic code for this event can be found in the logged IMM message text. Please refer to the UEFI diagnostic code in the "UEFI diagnostic code" section of the Information Center for the appropriate user response.

816f070c-2030ffff Configuration error for [PhysicalMemoryElementName] on Subsystem [MemoryElementName]has deasserted.

Explanation: This message is for the use case when an implementation has detected a Memory DIMM configuration error has deasserted.

May also be shown as 816f070c2030ffff or 0x816f070c2030ffff

Severity: Info

Alert Category: Critical - Memory

Serviceable: No

CIM Information: **Prefix:** PLAT and **ID:** 0127

SNMP Trap ID: 41

Automatically notify Support: No

User response: This is a UEFI detected event. The UEFI diagnostic code for this event can be found in the logged IMM message text. Please refer to the UEFI diagnostic code in the "UEFI diagnostic code" section of the Information Center for the appropriate user response.

816f070c-2581ffff Configuration error for [PhysicalMemoryElementName] on Subsystem [MemoryElementName]has deasserted.

Explanation: This message is for the use case when an implementation has detected a Memory DIMM configuration error has deasserted. All DIMMs. One of the DIMMs.

May also be shown as 816f070c2581ffff or 0x816f070c2581ffff

Severity: Info

Alert Category: Critical - Memory

Serviceable: No

CIM Information: **Prefix:** PLAT and **ID:** 0127

SNMP Trap ID: 41

Automatically notify Support: No

User response: This is a UEFI detected event. The UEFI diagnostic code for this event can be found in the logged IMM message text. Please refer to the UEFI diagnostic code in the "UEFI diagnostic code" section of the Information Center for the appropriate user response.

816f070d-0400ffff Rebuild completed for Array in system [ComputerSystemElementName].

Explanation: The rebuild of the RAID array has completed.

May also be shown as 816f070d0400ffff or 0x816f070d0400ffff

Severity: Info

Alert Category: System - Other

Serviceable: No

CIM Information: **Prefix:** PLAT and **ID:** 0179

SNMP Trap ID:

Automatically notify Support: No

User response: Information only; no action is required.

816f070d-0401ffff Rebuild completed for Array in system [ComputerSystemElementName].

Explanation: The rebuild of the RAID array has completed.

May also be shown as 816f070d0401ffff or 0x816f070d0401ffff

Severity: Info

Alert Category: System - Other

Serviceable: No

CIM Information: **Prefix:** PLAT and **ID:** 0179

SNMP Trap ID:

Automatically notify Support: No

User response: Information only; no action is required.

816f070d-0402ffff Rebuild completed for Array in system [ComputerSystemElementName].

Explanation: The rebuild of the RAID array has completed.

May also be shown as 816f070d0402ffff or 0x816f070d0402ffff

Severity: Info

Alert Category: System - Other

Serviceable: No

CIM Information: **Prefix:** PLAT and **ID:** 0179

SNMP Trap ID:

Automatically notify Support: No

User response: Information only; no action is required.

816f070d-0403ffff Rebuild completed for Array in system [ComputerSystemElementName].

Explanation: The rebuild of the RAID array has completed.

May also be shown as 816f070d0403ffff or 0x816f070d0403ffff

Severity: Info

Alert Category: System - Other

Serviceable: No

CIM Information: **Prefix:** PLAT and **ID:** 0179

SNMP Trap ID:

Automatically notify Support: No

User response: Information only; no action is required.

816f070d-0404ffff Rebuild completed for Array in system [ComputerSystemElementName].

Explanation: The rebuild of the RAID array has completed.

May also be shown as 816f070d0404ffff or 0x816f070d0404ffff

Severity: Info

Alert Category: System - Other

Serviceable: No

CIM Information: **Prefix:** PLAT and **ID:** 0179

SNMP Trap ID:

Automatically notify Support: No

User response: Information only; no action is required.

816f070d-0405ffff Rebuild completed for Array in system [ComputerSystemElementName].

Explanation: The rebuild of the RAID array has completed.

May also be shown as 816f070d0405ffff or 0x816f070d0405ffff

Severity: Info

Alert Category: System - Other

Serviceable: No

CIM Information: **Prefix:** PLAT and **ID:** 0179

SNMP Trap ID:

Automatically notify Support: No

User response: Information only; no action is required.

816f070d-0406ffff Rebuild completed for Array in system [ComputerSystemElementName].

Explanation: The rebuild of the RAID array has completed.

May also be shown as 816f070d0406ffff or 0x816f070d0406ffff

Severity: Info

Alert Category: System - Other

Serviceable: No

CIM Information: **Prefix:** PLAT and **ID:** 0179

SNMP Trap ID:

Automatically notify Support: No

User response: Information only; no action is required.

816f070d-0407ffff Rebuild completed for Array in system [ComputerSystemElementName].

Explanation: The rebuild of the RAID array has completed.

May also be shown as 816f070d0407ffff or 0x816f070d0407ffff

Severity: Info

Alert Category: System - Other

Serviceable: No

CIM Information: **Prefix:** PLAT and **ID:** 0179

SNMP Trap ID:

Automatically notify Support: No

User response: Information only; no action is required.

816f0807-0301ffff [ProcessorElementName] has been Enabled.

Explanation: This message is for the use case when an implementation has detected a Processor has been Enabled.

May also be shown as 816f08070301ffff or 0x816f08070301ffff

Severity: Info

Alert Category: System - Other

Serviceable: No

CIM Information: **Prefix:** PLAT and **ID:** 0060

SNMP Trap ID:

Automatically notify Support: No

User response: This is a UEFI detected event. The UEFI diagnostic code for this event can be found in the logged IMM message text. Please refer to the UEFI diagnostic code in the "UEFI diagnostic code" section of the Information Center for the appropriate user response.

816f0807-0302ffff [ProcessorElementName] has been Enabled.

Explanation: This message is for the use case when an implementation has detected a Processor has been Enabled.

May also be shown as 816f08070302ffff or 0x816f08070302ffff

Severity: Info

Alert Category: System - Other

Serviceable: No

CIM Information: **Prefix:** PLAT and **ID:** 0060

SNMP Trap ID:

Automatically notify Support: No

User response: This is a UEFI detected event. The UEFI diagnostic code for this event can be found in the logged IMM message text. Please refer to the UEFI diagnostic code in the "UEFI diagnostic code" section of the Information Center for the appropriate user response.

816f0807-0303ffff [ProcessorElementName] has been Enabled.

Explanation: This message is for the use case when an implementation has detected a Processor has been Enabled.

May also be shown as 816f08070303ffff or 0x816f08070303ffff

Severity: Info

Alert Category: System - Other

Serviceable: No

CIM Information: **Prefix:** PLAT and **ID:** 0060

SNMP Trap ID:

Automatically notify Support: No

User response: This is a UEFI detected event. The UEFI diagnostic code for this event can be found in the logged IMM message text. Please refer to the UEFI diagnostic code in the "UEFI diagnostic code" section of the Information Center for the appropriate user response.

816f0807-0304ffff [ProcessorElementName] has been Enabled.

Explanation: This message is for the use case when an implementation has detected a Processor has been Enabled.

May also be shown as 816f08070304ffff or 0x816f08070304ffff

Severity: Info

Alert Category: System - Other

Serviceable: No

CIM Information: **Prefix:** PLAT and **ID:** 0060

SNMP Trap ID:

Automatically notify Support: No

User response: This is a UEFI detected event. The UEFI diagnostic code for this event can be found in the logged IMM message text. Please refer to the UEFI diagnostic code in the "UEFI diagnostic code" section of the Information Center for the appropriate user response.

816f0807-2584ffff [ProcessorElementName] has been Enabled.

Explanation: This message is for the use case when an implementation has detected a Processor has been Enabled. All CPUs. One of CPUs.

May also be shown as 816f08072584ffff or 0x816f08072584ffff

Severity: Info

Alert Category: System - Other

Serviceable: No

CIM Information: **Prefix:** PLAT and **ID:** 0060

SNMP Trap ID:

Automatically notify Support: No

User response: This is a UEFI detected event. The UEFI diagnostic code for this event can be found in the logged IMM message text. Please refer to the UEFI diagnostic code in the "UEFI diagnostic code" section of the Information Center for the appropriate user response.

816f0813-2581ffff Bus [SensorElementName] has recovered from an Uncorrectable Bus Error.

Explanation: This message is for the use case when an implementation has detected a that a system has recovered from a Bus Uncorrectable Error. DIMMs.

May also be shown as 816f08132581ffff or 0x816f08132581ffff

Severity: Info

Alert Category: Critical - Other

Serviceable: No

CIM Information: **Prefix:** PLAT and **ID:** 0241

SNMP Trap ID: 50

Automatically notify Support: No

User response: This is a UEFI detected event. The UEFI diagnostic code for this event can be found in the logged IMM message text. Please refer to the UEFI diagnostic code in the "UEFI diagnostic code" section of the Information Center for the appropriate user response.

816f0813-2584ffff Bus [SensorElementName] has recovered from an Uncorrectable Bus Error.

Explanation: This message is for the use case when an implementation has detected a that a system has recovered from a Bus Uncorrectable Error. CPUs.

May also be shown as 816f08132584ffff or 0x816f08132584ffff

Severity: Info

Alert Category: Critical - Other

Serviceable: No

CIM Information: **Prefix:** PLAT and **ID:** 0241

SNMP Trap ID: 50

Automatically notify Support: No

User response: This is a UEFI detected event. The UEFI diagnostic code for this event can be found in the logged IMM message text. Please refer to the UEFI diagnostic code in the "UEFI diagnostic code" section of the Information Center for the appropriate user response.

816f090c-2001ffff [PhysicalMemoryElementName] on Subsystem [MemoryElementName] is no longer Throttled.

Explanation: Memory DIMM throttling has been turned off.

May also be shown as 816f090c2001ffff or 0x816f090c2001ffff

Severity: Info

Alert Category: System - Other

Serviceable: No

CIM Information: **Prefix:** PLAT and **ID:** 0143

SNMP Trap ID:

Automatically notify Support: No

User response: Information only; no action is required.

816f090c-2002ffff [PhysicalMemoryElementName] on Subsystem [MemoryElementName] is no longer Throttled.

Explanation: Memory DIMM throttling has been turned off.

May also be shown as 816f090c2002ffff or 0x816f090c2002ffff

Severity: Info

Alert Category: System - Other

Serviceable: No

CIM Information: **Prefix:** PLAT and **ID:** 0143

SNMP Trap ID:

Automatically notify Support: No

User response: Information only; no action is required.

816f090c-2003ffff [PhysicalMemoryElementName] on Subsystem [MemoryElementName] is no longer Throttled.

Explanation: Memory DIMM throttling has been turned off.

May also be shown as 816f090c2003ffff or 0x816f090c2003ffff

Severity: Info

Alert Category: System - Other

Serviceable: No

CIM Information: **Prefix:** PLAT and **ID:** 0143

SNMP Trap ID:

Automatically notify Support: No

User response: Information only; no action is required.

816f090c-2004ffff [PhysicalMemoryElementName] on Subsystem [MemoryElementName] is no longer Throttled.

Explanation: Memory DIMM throttling has been turned off.

May also be shown as 816f090c2004ffff or 0x816f090c2004ffff

Severity: Info

Alert Category: System - Other

Serviceable: No

CIM Information: **Prefix:** PLAT and **ID:** 0143

SNMP Trap ID:

Automatically notify Support: No

User response: Information only; no action is required.

816f090c-2005ffff [PhysicalMemoryElementName] on Subsystem [MemoryElementName] is no longer Throttled.

Explanation: Memory DIMM throttling has been turned off.

May also be shown as 816f090c2005ffff or 0x816f090c2005ffff

Severity: Info

Alert Category: System - Other

Serviceable: No

CIM Information: **Prefix:** PLAT and **ID:** 0143

SNMP Trap ID:

Automatically notify Support: No

User response: Information only; no action is required.

816f090c-2006ffff [PhysicalMemoryElementName] on Subsystem [MemoryElementName] is no longer Throttled.

Explanation: Memory DIMM throttling has been turned off.

May also be shown as 816f090c2006ffff or 0x816f090c2006ffff

Severity: Info

Alert Category: System - Other

Serviceable: No

CIM Information: **Prefix:** PLAT and **ID:** 0143

SNMP Trap ID:

Automatically notify Support: No

User response: Information only; no action is required.

816f090c-2007ffff [PhysicalMemoryElementName] on Subsystem [MemoryElementName] is no longer Throttled.

Explanation: Memory DIMM throttling has been turned off.

May also be shown as 816f090c2007ffff or 0x816f090c2007ffff

Severity: Info

Alert Category: System - Other

Serviceable: No

CIM Information: **Prefix:** PLAT and **ID:** 0143

SNMP Trap ID:

Automatically notify Support: No

User response: Information only; no action is required.

816f090c-2008ffff [PhysicalMemoryElementName] on Subsystem [MemoryElementName] is no longer Throttled.

Explanation: Memory DIMM throttling has been turned off.

May also be shown as 816f090c2008ffff or 0x816f090c2008ffff

Severity: Info

Alert Category: System - Other

Serviceable: No

CIM Information: **Prefix:** PLAT and **ID:** 0143

SNMP Trap ID:

Automatically notify Support: No

User response: Information only; no action is required.

816f090c-2009ffff [PhysicalMemoryElementName] on Subsystem [MemoryElementName] is no longer Throttled.

Explanation: Memory DIMM throttling has been turned off.

May also be shown as 816f090c2009ffff or 0x816f090c2009ffff

Severity: Info

Alert Category: System - Other

Serviceable: No

CIM Information: **Prefix:** PLAT and **ID:** 0143

SNMP Trap ID:

Automatically notify Support: No

User response: Information only; no action is required.

816f090c-200affff [PhysicalMemoryElementName] on Subsystem [MemoryElementName] is no longer Throttled.

Explanation: Memory DIMM throttling has been turned off.

May also be shown as 816f090c200affff or 0x816f090c200affff

Severity: Info

Alert Category: System - Other

Serviceable: No

CIM Information: **Prefix:** PLAT and **ID:** 0143

SNMP Trap ID:

Automatically notify Support: No

User response: Information only; no action is required.

816f090c-200bffff [PhysicalMemoryElementName] on Subsystem [MemoryElementName] is no longer Throttled.

Explanation: Memory DIMM throttling has been turned off.

May also be shown as 816f090c200bffff or 0x816f090c200bffff

Severity: Info

Alert Category: System - Other

Serviceable: No

CIM Information: **Prefix:** PLAT and **ID:** 0143

SNMP Trap ID:

Automatically notify Support: No

User response: Information only; no action is required.

816f090c-200cffff [PhysicalMemoryElementName] on Subsystem [MemoryElementName] is no longer Throttled.

Explanation: Memory DIMM throttling has been turned off.

May also be shown as 816f090c200cffff or 0x816f090c200cffff

Severity: Info

Alert Category: System - Other

Serviceable: No

CIM Information: **Prefix:** PLAT and **ID:** 0143

SNMP Trap ID:

Automatically notify Support: No

User response: Information only; no action is required.

816f090c-200dffff [PhysicalMemoryElementName] on Subsystem [MemoryElementName] is no longer Throttled.

Explanation: Memory DIMM throttling has been turned off.

May also be shown as 816f090c200dffff or 0x816f090c200dffff

Severity: Info

Alert Category: System - Other

Serviceable: No

CIM Information: **Prefix:** PLAT and **ID:** 0143

SNMP Trap ID:

Automatically notify Support: No

User response: Information only; no action is required.

816f090c-200effff [PhysicalMemoryElementName] on Subsystem [MemoryElementName] is no longer Throttled.

Explanation: Memory DIMM throttling has been turned off.

May also be shown as 816f090c200effff or 0x816f090c200effff

Severity: Info

Alert Category: System - Other

Serviceable: No

CIM Information: **Prefix:** PLAT and **ID:** 0143

SNMP Trap ID:

Automatically notify Support: No

User response: Information only; no action is required.

816f090c-200fffff [PhysicalMemoryElementName] on Subsystem [MemoryElementName] is no longer Throttled.

Explanation: Memory DIMM throttling has been turned off.

May also be shown as 816f090c200fffff or 0x816f090c200fffff

Severity: Info

Alert Category: System - Other

Serviceable: No

CIM Information: **Prefix:** PLAT and **ID:** 0143

SNMP Trap ID:

Automatically notify Support: No

User response: Information only; no action is required.

816f090c-2010ffff [PhysicalMemoryElementName] on Subsystem [MemoryElementName] is no longer Throttled.

Explanation: Memory DIMM throttling has been turned off.

May also be shown as 816f090c2010ffff or 0x816f090c2010ffff

Severity: Info

Alert Category: System - Other

Serviceable: No

CIM Information: **Prefix:** PLAT and **ID:** 0143

SNMP Trap ID:

Automatically notify Support: No

User response: Information only; no action is required.

816f090c-2011ffff [PhysicalMemoryElementName] on Subsystem [MemoryElementName] is no longer Throttled.

Explanation: Memory DIMM throttling has been turned off.

May also be shown as 816f090c2011ffff or 0x816f090c2011ffff

Severity: Info

Alert Category: System - Other

Serviceable: No

CIM Information: **Prefix:** PLAT and **ID:** 0143

SNMP Trap ID:

Automatically notify Support: No

User response: Information only; no action is required.

816f090c-2012ffff [PhysicalMemoryElementName] on Subsystem [MemoryElementName] is no longer Throttled.

Explanation: Memory DIMM throttling has been turned off.

May also be shown as 816f090c2012ffff or 0x816f090c2012ffff

Severity: Info

Alert Category: System - Other

Serviceable: No

CIM Information: **Prefix:** PLAT and **ID:** 0143

SNMP Trap ID:

Automatically notify Support: No

User response: Information only; no action is required.

816f090c-2013ffff [PhysicalMemoryElementName] on Subsystem [MemoryElementName] is no longer Throttled.

Explanation: Memory DIMM throttling has been turned off.

May also be shown as 816f090c2013ffff or 0x816f090c2013ffff

Severity: Info

Alert Category: System - Other

Serviceable: No

CIM Information: **Prefix:** PLAT and **ID:** 0143

SNMP Trap ID:

Automatically notify Support: No

User response: Information only; no action is required.

816f090c-2014ffff [PhysicalMemoryElementName] on Subsystem [MemoryElementName] is no longer Throttled.

Explanation: Memory DIMM throttling has been turned off.

May also be shown as 816f090c2014ffff or 0x816f090c2014ffff

Severity: Info

Alert Category: System - Other

Serviceable: No

CIM Information: **Prefix:** PLAT and **ID:** 0143

SNMP Trap ID:

Automatically notify Support: No

User response: Information only; no action is required.

816f090c-2015ffff [PhysicalMemoryElementName] on Subsystem [MemoryElementName] is no longer Throttled.

Explanation: Memory DIMM throttling has been turned off.

May also be shown as 816f090c2015ffff or 0x816f090c2015ffff

Severity: Info

Alert Category: System - Other

Serviceable: No

CIM Information: **Prefix:** PLAT and **ID:** 0143

SNMP Trap ID:

Automatically notify Support: No

User response: Information only; no action is required.

816f090c-2016ffff [PhysicalMemoryElementName] on Subsystem [MemoryElementName] is no longer Throttled.

Explanation: Memory DIMM throttling has been turned off.

May also be shown as 816f090c2016ffff or 0x816f090c2016ffff

Severity: Info

Alert Category: System - Other

Serviceable: No

CIM Information: **Prefix:** PLAT and **ID:** 0143

SNMP Trap ID:

Automatically notify Support: No

User response: Information only; no action is required.

816f090c-2017ffff [PhysicalMemoryElementName] on Subsystem [MemoryElementName] is no longer Throttled.

Explanation: Memory DIMM throttling has been turned off.

May also be shown as 816f090c2017ffff or 0x816f090c2017ffff

Severity: Info

Alert Category: System - Other

Serviceable: No

CIM Information: **Prefix:** PLAT and **ID:** 0143

SNMP Trap ID:

Automatically notify Support: No

User response: Information only; no action is required.

816f090c-2018ffff [PhysicalMemoryElementName] on Subsystem [MemoryElementName] is no longer Throttled.

Explanation: Memory DIMM throttling has been turned off.

May also be shown as 816f090c2018ffff or 0x816f090c2018ffff

Severity: Info

Alert Category: System - Other

Serviceable: No

CIM Information: **Prefix:** PLAT and **ID:** 0143

SNMP Trap ID:

Automatically notify Support: No

User response: Information only; no action is required.

816f090c-2019ffff [PhysicalMemoryElementName] on Subsystem [MemoryElementName] is no longer Throttled.

Explanation: Memory DIMM throttling has been turned off.

May also be shown as 816f090c2019ffff or 0x816f090c2019ffff

Severity: Info

Alert Category: System - Other

Serviceable: No

CIM Information: **Prefix:** PLAT and **ID:** 0143

SNMP Trap ID:

Automatically notify Support: No

User response: Information only; no action is required.

816f090c-201affff [PhysicalMemoryElementName] on Subsystem [MemoryElementName] is no longer Throttled.

Explanation: Memory DIMM throttling has been turned off.

May also be shown as 816f090c201affff or 0x816f090c201affff

Severity: Info

Alert Category: System - Other

Serviceable: No

CIM Information: **Prefix:** PLAT and **ID:** 0143

SNMP Trap ID:

Automatically notify Support: No

User response: Information only; no action is required.

816f090c-201bffff [PhysicalMemoryElementName] on Subsystem [MemoryElementName] is no longer Throttled.

Explanation: Memory DIMM throttling has been turned off.

May also be shown as 816f090c201bffff or 0x816f090c201bffff

Severity: Info

Alert Category: System - Other

Serviceable: No

CIM Information: **Prefix:** PLAT and **ID:** 0143

SNMP Trap ID:

Automatically notify Support: No

User response: Information only; no action is required.

816f090c-201cffff [PhysicalMemoryElementName] on Subsystem [MemoryElementName] is no longer Throttled.

Explanation: Memory DIMM throttling has been turned off.

May also be shown as 816f090c201cffff or 0x816f090c201cffff

Severity: Info

Alert Category: System - Other

Serviceable: No

CIM Information: **Prefix:** PLAT and **ID:** 0143

SNMP Trap ID:

Automatically notify Support: No

User response: Information only; no action is required.

816f090c-201dffff [PhysicalMemoryElementName] on Subsystem [MemoryElementName] is no longer Throttled.

Explanation: Memory DIMM throttling has been turned off.

May also be shown as 816f090c201dffff or 0x816f090c201dffff

Severity: Info

Alert Category: System - Other

Serviceable: No

CIM Information: **Prefix:** PLAT and **ID:** 0143

SNMP Trap ID:

Automatically notify Support: No

User response: Information only; no action is required.

816f090c-201effff [PhysicalMemoryElementName] on Subsystem [MemoryElementName] is no longer Throttled.

Explanation: Memory DIMM throttling has been turned off.

May also be shown as 816f090c201effff or 0x816f090c201effff

Severity: Info

Alert Category: System - Other

Serviceable: No

CIM Information: **Prefix:** PLAT and **ID:** 0143

SNMP Trap ID:

Automatically notify Support: No

User response: Information only; no action is required.

816f090c-201fffff [PhysicalMemoryElementName] on Subsystem [MemoryElementName] is no longer Throttled.

Explanation: Memory DIMM throttling has been turned off.

May also be shown as 816f090c201fffff or 0x816f090c201fffff

Severity: Info

Alert Category: System - Other

Serviceable: No

CIM Information: **Prefix:** PLAT and **ID:** 0143

SNMP Trap ID:

Automatically notify Support: No

User response: Information only; no action is required.

816f090c-2020ffff [PhysicalMemoryElementName] on Subsystem [MemoryElementName] is no longer Throttled.

Explanation: Memory DIMM throttling has been turned off.

May also be shown as 816f090c2020ffff or 0x816f090c2020ffff

Severity: Info

Alert Category: System - Other

Serviceable: No

CIM Information: **Prefix:** PLAT and **ID:** 0143

SNMP Trap ID:

Automatically notify Support: No

User response: Information only; no action is required.

816f090c-2021ffff [PhysicalMemoryElementName] on Subsystem [MemoryElementName] is no longer Throttled.

Explanation: Memory DIMM throttling has been turned off.

May also be shown as 816f090c2021ffff or 0x816f090c2021ffff

Severity: Info

Alert Category: System - Other

Serviceable: No

CIM Information: **Prefix:** PLAT and **ID:** 0143

SNMP Trap ID:

Automatically notify Support: No

User response: Information only; no action is required.

816f090c-2022ffff [PhysicalMemoryElementName] on Subsystem [MemoryElementName] is no longer Throttled.

Explanation: Memory DIMM throttling has been turned off.

May also be shown as 816f090c2022ffff or 0x816f090c2022ffff

Severity: Info

Alert Category: System - Other

Serviceable: No

CIM Information: **Prefix:** PLAT and **ID:** 0143

SNMP Trap ID:

Automatically notify Support: No

User response: Information only; no action is required.

816f090c-2023ffff [PhysicalMemoryElementName] on Subsystem [MemoryElementName] is no longer Throttled.

Explanation: Memory DIMM throttling has been turned off.

May also be shown as 816f090c2023ffff or 0x816f090c2023ffff

Severity: Info

Alert Category: System - Other

Serviceable: No

CIM Information: **Prefix:** PLAT and **ID:** 0143

SNMP Trap ID:

Automatically notify Support: No

User response: Information only; no action is required.

816f090c-2024ffff [PhysicalMemoryElementName] on Subsystem [MemoryElementName] is no longer Throttled.

Explanation: Memory DIMM throttling has been turned off.

May also be shown as 816f090c2024ffff or 0x816f090c2024ffff

Severity: Info

Alert Category: System - Other

Serviceable: No

CIM Information: **Prefix:** PLAT and **ID:** 0143

SNMP Trap ID:

Automatically notify Support: No

User response: Information only; no action is required.

816f090c-2025ffff [PhysicalMemoryElementName] on Subsystem [MemoryElementName] is no longer Throttled.

Explanation: Memory DIMM throttling has been turned off.

May also be shown as 816f090c2025ffff or 0x816f090c2025ffff

Severity: Info

Alert Category: System - Other

Serviceable: No

CIM Information: **Prefix:** PLAT and **ID:** 0143

SNMP Trap ID:

Automatically notify Support: No

User response: Information only; no action is required.

816f090c-2026ffff [PhysicalMemoryElementName] on Subsystem [MemoryElementName] is no longer Throttled.

Explanation: Memory DIMM throttling has been turned off.

May also be shown as 816f090c2026ffff or 0x816f090c2026ffff

Severity: Info

Alert Category: System - Other

Serviceable: No

CIM Information: **Prefix:** PLAT and **ID:** 0143

SNMP Trap ID:

Automatically notify Support: No

User response: Information only; no action is required.

816f090c-2027ffff [PhysicalMemoryElementName] on Subsystem [MemoryElementName] is no longer Throttled.

Explanation: Memory DIMM throttling has been turned off.

May also be shown as 816f090c2027ffff or 0x816f090c2027ffff

Severity: Info

Alert Category: System - Other

Serviceable: No

CIM Information: **Prefix:** PLAT and **ID:** 0143

SNMP Trap ID:

Automatically notify Support: No

User response: Information only; no action is required.

816f090c-2028ffff [PhysicalMemoryElementName] on Subsystem [MemoryElementName] is no longer Throttled.

Explanation: Memory DIMM throttling has been turned off.

May also be shown as 816f090c2028ffff or 0x816f090c2028ffff

Severity: Info

Alert Category: System - Other

Serviceable: No

CIM Information: **Prefix:** PLAT and **ID:** 0143

SNMP Trap ID:

Automatically notify Support: No

User response: Information only; no action is required.

816f090c-2029ffff [PhysicalMemoryElementName] on Subsystem [MemoryElementName] is no longer Throttled.

Explanation: Memory DIMM throttling has been turned off.

May also be shown as 816f090c2029ffff or 0x816f090c2029ffff

Severity: Info

Alert Category: System - Other

Serviceable: No

CIM Information: **Prefix:** PLAT and **ID:** 0143

SNMP Trap ID:

Automatically notify Support: No

User response: Information only; no action is required.

816f090c-202affff [PhysicalMemoryElementName] on Subsystem [MemoryElementName] is no longer Throttled.

Explanation: Memory DIMM throttling has been turned off.

May also be shown as 816f090c202affff or 0x816f090c202affff

Severity: Info

Alert Category: System - Other

Serviceable: No

CIM Information: **Prefix:** PLAT and **ID:** 0143

SNMP Trap ID:

Automatically notify Support: No

User response: Information only; no action is required.

816f090c-202bffff [PhysicalMemoryElementName] on Subsystem [MemoryElementName] is no longer Throttled.

Explanation: Memory DIMM throttling has been turned off.

May also be shown as 816f090c202bffff or 0x816f090c202bffff

Severity: Info

Alert Category: System - Other

Serviceable: No

CIM Information: **Prefix:** PLAT and **ID:** 0143

SNMP Trap ID:

Automatically notify Support: No

User response: Information only; no action is required.

816f090c-202cffff [PhysicalMemoryElementName] on Subsystem [MemoryElementName] is no longer Throttled.

Explanation: Memory DIMM throttling has been turned off.

May also be shown as 816f090c202cffff or 0x816f090c202cffff

Severity: Info

Alert Category: System - Other

Serviceable: No

CIM Information: **Prefix:** PLAT and **ID:** 0143

SNMP Trap ID:

Automatically notify Support: No

User response: Information only; no action is required.

816f090c-202dffff [PhysicalMemoryElementName] on Subsystem [MemoryElementName] is no longer Throttled.

Explanation: Memory DIMM throttling has been turned off.

May also be shown as 816f090c202dffff or 0x816f090c202dffff

Severity: Info

Alert Category: System - Other

Serviceable: No

CIM Information: **Prefix:** PLAT and **ID:** 0143

SNMP Trap ID:

Automatically notify Support: No

User response: Information only; no action is required.

816f090c-202effff [PhysicalMemoryElementName] on Subsystem [MemoryElementName] is no longer Throttled.

Explanation: Memory DIMM throttling has been turned off.

May also be shown as 816f090c202effff or 0x816f090c202effff

Severity: Info

Alert Category: System - Other

Serviceable: No

CIM Information: **Prefix:** PLAT and **ID:** 0143

SNMP Trap ID:

Automatically notify Support: No

User response: Information only; no action is required.

816f090c-202fffff [PhysicalMemoryElementName] on Subsystem [MemoryElementName] is no longer Throttled.

Explanation: Memory DIMM throttling has been turned off.

May also be shown as 816f090c202fffff or 0x816f090c202fffff

Severity: Info

Alert Category: System - Other

Serviceable: No

CIM Information: **Prefix:** PLAT and **ID:** 0143

SNMP Trap ID:

Automatically notify Support: No

User response: Information only; no action is required.

816f090c-2030ffff [PhysicalMemoryElementName] on Subsystem [MemoryElementName] is no longer Throttled.

Explanation: Memory DIMM throttling has been turned off.

May also be shown as 816f090c2030ffff or 0x816f090c2030ffff

Severity: Info

Alert Category: System - Other

Serviceable: No

CIM Information: **Prefix:** PLAT and **ID:** 0143

SNMP Trap ID:

Automatically notify Support: No

User response: Information only; no action is required.

816f090c-2581ffff [PhysicalMemoryElementName] on Subsystem [MemoryElementName] is no longer Throttled.

Explanation: Memory DIMM throttling has been turned off. All DIMMs. One of the DIMMs.

May also be shown as 816f090c2581ffff or 0x816f090c2581ffff

Severity: Info

Alert Category: System - Other

Serviceable: No

CIM Information: **Prefix:** PLAT and **ID:** 0143

SNMP Trap ID:

Automatically notify Support: No

User response: Information only; no action is required.

816f0a07-0301ffff The Processor [ProcessorElementName] is no longer operating in a Degraded State.

Explanation: The microprocessor 1 is no longer being throttled. (or ... has been turned off.)

May also be shown as 816f0a070301ffff or 0x816f0a070301ffff

Severity: Info

Alert Category: Warning - CPU

Serviceable: No

CIM Information: **Prefix:** PLAT and **ID:** 0039

SNMP Trap ID: 42

Automatically notify Support: No

User response: Information only; no action is required.

816f0a07-0302ffff The Processor [ProcessorElementName] is no longer operating in a Degraded State.

Explanation: The microprocessor 2 is no longer being throttled. (or ... has been turned off.)

May also be shown as 816f0a070302ffff or 0x816f0a070302ffff

Severity: Info

Alert Category: Warning - CPU

Serviceable: No

CIM Information: **Prefix:** PLAT and **ID:** 0039

SNMP Trap ID: 42

Automatically notify Support: No

User response: Information only; no action is required.

816f0a07-0303ffff The Processor [ProcessorElementName] is no longer operating in a Degraded State.

Explanation: The microprocessor 3 is no longer being throttled. (or ... has been turned off.)

May also be shown as 816f0a070303ffff or 0x816f0a070303ffff

Severity: Info

Alert Category: Warning - CPU

Serviceable: No

CIM Information: **Prefix:** PLAT and **ID:** 0039

SNMP Trap ID: 42

Automatically notify Support: No

User response: Information only; no action is required.

816f0a07-0304ffff The Processor [ProcessorElementName] is no longer operating in a Degraded State.

Explanation: The microprocessor 4 is no longer being throttled. (or ... has been turned off.)

May also be shown as 816f0a070304ffff or 0x816f0a070304ffff

Severity: Info

Alert Category: Warning - CPU

Serviceable: No

CIM Information: **Prefix:** PLAT and **ID:** 0039

SNMP Trap ID: 42

Automatically notify Support: No

User response: Information only; no action is required.

816f0a07-2584ffff The Processor [ProcessorElementName] is no longer operating in a Degraded State.

Explanation: The microprocessor is no longer being throttled. (or ... has been turned off.) All CPUs. One of CPUs.

May also be shown as 816f0a072584ffff or 0x816f0a072584ffff

Severity: Info

Alert Category: Warning - CPU

Serviceable: Yes

CIM Information: **Prefix:** PLAT and **ID:** 0039

SNMP Trap ID: 42

Automatically notify Support: No

User response: Information only; no action is required.

816f0a0c-2001ffff An Over-Temperature Condition has been removed on the [PhysicalMemoryElementName] on Subsystem [MemoryElementName].

Explanation: Memory DIMM is no longer in an over-temperature condition.

May also be shown as 816f0a0c2001ffff or 0x816f0a0c2001ffff

Severity: Info

Alert Category: Critical - Temperature

Serviceable: No

CIM Information: **Prefix:** PLAT and **ID:** 0147

SNMP Trap ID: 0

Automatically notify Support: No

User response: Information only; no action is required.

816f0a0c-2002ffff An Over-Temperature Condition has been removed on the [PhysicalMemoryElementName] on Subsystem [MemoryElementName].

Explanation: Memory DIMM is no longer in an over-temperature condition.

May also be shown as 816f0a0c2002ffff or 0x816f0a0c2002ffff

Severity: Info

Alert Category: Critical - Temperature

Serviceable: No

CIM Information: **Prefix:** PLAT and **ID:** 0147

SNMP Trap ID: 0

Automatically notify Support: No

User response: Information only; no action is required.

816f0a0c-2003ffff An Over-Temperature Condition has been removed on the [PhysicalMemoryElementName] on Subsystem [MemoryElementName].

Explanation: Memory DIMM is no longer in an over-temperature condition.

May also be shown as 816f0a0c2003ffff or 0x816f0a0c2003ffff

Severity: Info

Alert Category: Critical - Temperature

Serviceable: No

CIM Information: **Prefix:** PLAT and **ID:** 0147

SNMP Trap ID: 0

Automatically notify Support: No

User response: Information only; no action is required.

816f0a0c-2004ffff An Over-Temperature Condition has been removed on the [PhysicalMemoryElementName] on Subsystem [MemoryElementName].

Explanation: Memory DIMM is no longer in an over-temperature condition.

May also be shown as 816f0a0c2004ffff or 0x816f0a0c2004ffff

Severity: Info

Alert Category: Critical - Temperature

Serviceable: No

CIM Information: **Prefix:** PLAT and **ID:** 0147

SNMP Trap ID: 0

Automatically notify Support: No

User response: Information only; no action is required.

816f0a0c-2005ffff An Over-Temperature Condition has been removed on the [PhysicalMemoryElementName] on Subsystem [MemoryElementName].

Explanation: Memory DIMM is no longer in an over-temperature condition.

May also be shown as 816f0a0c2005ffff or 0x816f0a0c2005ffff

Severity: Info

Alert Category: Critical - Temperature

Serviceable: No

CIM Information: **Prefix:** PLAT and **ID:** 0147

SNMP Trap ID: 0

Automatically notify Support: No

User response: Information only; no action is required.

816f0a0c-2006ffff An Over-Temperature Condition has been removed on the [PhysicalMemoryElementName] on Subsystem [MemoryElementName].

Explanation: Memory DIMM is no longer in an over-temperature condition.

May also be shown as 816f0a0c2006ffff or 0x816f0a0c2006ffff

Severity: Info

Alert Category: Critical - Temperature

Serviceable: No

CIM Information: **Prefix:** PLAT and **ID:** 0147

SNMP Trap ID: 0

Automatically notify Support: No

User response: Information only; no action is required.

816f0a0c-2007ffff An Over-Temperature Condition has been removed on the [PhysicalMemoryElementName] on Subsystem [MemoryElementName].

Explanation: Memory DIMM is no longer in an over-temperature condition.

May also be shown as 816f0a0c2007ffff or 0x816f0a0c2007ffff

Severity: Info

Alert Category: Critical - Temperature

Serviceable: No

CIM Information: **Prefix:** PLAT and **ID:** 0147

SNMP Trap ID: 0

Automatically notify Support: No

User response: Information only; no action is required.

816f0a0c-2008ffff An Over-Temperature Condition has been removed on the [PhysicalMemoryElementName] on Subsystem [MemoryElementName].

Explanation: Memory DIMM is no longer in an over-temperature condition.

May also be shown as 816f0a0c2008ffff or 0x816f0a0c2008ffff

Severity: Info

Alert Category: Critical - Temperature

Serviceable: No

CIM Information: **Prefix:** PLAT and **ID:** 0147

SNMP Trap ID: 0

Automatically notify Support: No

User response: Information only; no action is required.

816f0a0c-2009ffff An Over-Temperature Condition has been removed on the [PhysicalMemoryElementName] on Subsystem [MemoryElementName].

Explanation: Memory DIMM is no longer in an over-temperature condition.

May also be shown as 816f0a0c2009ffff or 0x816f0a0c2009ffff

Severity: Info

Alert Category: Critical - Temperature

Serviceable: No

CIM Information: **Prefix:** PLAT and **ID:** 0147

SNMP Trap ID: 0

Automatically notify Support: No

User response: Information only; no action is required.

816f0a0c-200affff An Over-Temperature Condition has been removed on the [PhysicalMemoryElementName] on Subsystem [MemoryElementName].

Explanation: Memory DIMM is no longer in an over-temperature condition.

May also be shown as 816f0a0c200affff or 0x816f0a0c200affff

Severity: Info

Alert Category: Critical - Temperature

Serviceable: No

CIM Information: **Prefix:** PLAT and **ID:** 0147

SNMP Trap ID: 0

Automatically notify Support: No

User response: Information only; no action is required.

816f0a0c-200bffff An Over-Temperature Condition has been removed on the [PhysicalMemoryElementName] on Subsystem [MemoryElementName].

Explanation: Memory DIMM is no longer in an over-temperature condition.

May also be shown as 816f0a0c200bffff or 0x816f0a0c200bffff

Severity: Info

Alert Category: Critical - Temperature

Serviceable: No

CIM Information: **Prefix:** PLAT and **ID:** 0147

SNMP Trap ID: 0

Automatically notify Support: No

User response: Information only; no action is required.

816f0a0c-200cffff An Over-Temperature Condition has been removed on the [PhysicalMemoryElementName] on Subsystem [MemoryElementName].

Explanation: Memory DIMM is no longer in an over-temperature condition.

May also be shown as 816f0a0c200cffff or 0x816f0a0c200cffff

Severity: Info

Alert Category: Critical - Temperature

Serviceable: No

CIM Information: **Prefix:** PLAT and **ID:** 0147

SNMP Trap ID: 0

Automatically notify Support: No

User response: Information only; no action is required.

816f0a0c-200dffff An Over-Temperature Condition has been removed on the [PhysicalMemoryElementName] on Subsystem [MemoryElementName].

Explanation: Memory DIMM is no longer in an over-temperature condition.

May also be shown as 816f0a0c200dffff or 0x816f0a0c200dffff

Severity: Info

Alert Category: Critical - Temperature

Serviceable: No

CIM Information: **Prefix:** PLAT and **ID:** 0147

SNMP Trap ID: 0

Automatically notify Support: No

User response: Information only; no action is required.

816f0a0c-200effff An Over-Temperature Condition has been removed on the [PhysicalMemoryElementName] on Subsystem [MemoryElementName].

Explanation: Memory DIMM is no longer in an over-temperature condition.

May also be shown as 816f0a0c200effff or 0x816f0a0c200effff

Severity: Info

Alert Category: Critical - Temperature

Serviceable: No

CIM Information: **Prefix:** PLAT and **ID:** 0147

SNMP Trap ID: 0

Automatically notify Support: No

User response: Information only; no action is required.

816f0a0c-200fffff An Over-Temperature Condition has been removed on the [PhysicalMemoryElementName] on Subsystem [MemoryElementName].

Explanation: Memory DIMM is no longer in an over-temperature condition.

May also be shown as 816f0a0c200fffff or 0x816f0a0c200fffff

Severity: Info

Alert Category: Critical - Temperature

Serviceable: No

CIM Information: **Prefix:** PLAT and **ID:** 0147

SNMP Trap ID: 0

Automatically notify Support: No

User response: Information only; no action is required.

816f0a0c-2010ffff An Over-Temperature Condition has been removed on the [PhysicalMemoryElementName] on Subsystem [MemoryElementName].

Explanation: Memory DIMM is no longer in an over-temperature condition.

May also be shown as 816f0a0c2010ffff or 0x816f0a0c2010ffff

Severity: Info

Alert Category: Critical - Temperature

Serviceable: No

CIM Information: **Prefix:** PLAT and **ID:** 0147

SNMP Trap ID: 0

Automatically notify Support: No

User response: Information only; no action is required.

816f0a0c-2011ffff An Over-Temperature Condition has been removed on the [PhysicalMemoryElementName] on Subsystem [MemoryElementName].

Explanation: Memory DIMM is no longer in an over-temperature condition.

May also be shown as 816f0a0c2011ffff or 0x816f0a0c2011ffff

Severity: Info

Alert Category: Critical - Temperature

Serviceable: No

CIM Information: **Prefix:** PLAT and **ID:** 0147

SNMP Trap ID: 0

Automatically notify Support: No

User response: Information only; no action is required.

816f0a0c-2012ffff An Over-Temperature Condition has been removed on the [PhysicalMemoryElementName] on Subsystem [MemoryElementName].

Explanation: Memory DIMM is no longer in an over-temperature condition.

May also be shown as 816f0a0c2012ffff or 0x816f0a0c2012ffff

Severity: Info

Alert Category: Critical - Temperature

Serviceable: No

CIM Information: **Prefix:** PLAT and **ID:** 0147

SNMP Trap ID: 0

Automatically notify Support: No

User response: Information only; no action is required.

816f0a0c-2013ffff An Over-Temperature Condition has been removed on the [PhysicalMemoryElementName] on Subsystem [MemoryElementName].

Explanation: Memory DIMM is no longer in an over-temperature condition.

May also be shown as 816f0a0c2013ffff or 0x816f0a0c2013ffff

Severity: Info

Alert Category: Critical - Temperature

Serviceable: No

CIM Information: **Prefix:** PLAT and **ID:** 0147

SNMP Trap ID: 0

Automatically notify Support: No

User response: Information only; no action is required.

816f0a0c-2014ffff An Over-Temperature Condition has been removed on the [PhysicalMemoryElementName] on Subsystem [MemoryElementName].

Explanation: Memory DIMM is no longer in an over-temperature condition.

May also be shown as 816f0a0c2014ffff or 0x816f0a0c2014ffff

Severity: Info

Alert Category: Critical - Temperature

Serviceable: No

CIM Information: **Prefix:** PLAT and **ID:** 0147

SNMP Trap ID: 0

Automatically notify Support: No

User response: Information only; no action is required.

816f0a0c-2015ffff An Over-Temperature Condition has been removed on the [PhysicalMemoryElementName] on Subsystem [MemoryElementName].

Explanation: Memory DIMM is no longer in an over-temperature condition.

May also be shown as 816f0a0c2015ffff or 0x816f0a0c2015ffff

Severity: Info

Alert Category: Critical - Temperature

Serviceable: No

CIM Information: **Prefix:** PLAT and **ID:** 0147

SNMP Trap ID: 0

Automatically notify Support: No

User response: Information only; no action is required.

816f0a0c-2016ffff An Over-Temperature Condition has been removed on the [PhysicalMemoryElementName] on Subsystem [MemoryElementName].

Explanation: Memory DIMM is no longer in an over-temperature condition.

May also be shown as 816f0a0c2016ffff or 0x816f0a0c2016ffff

Severity: Info

Alert Category: Critical - Temperature

Serviceable: No

CIM Information: **Prefix:** PLAT and **ID:** 0147

SNMP Trap ID: 0

Automatically notify Support: No

User response: Information only; no action is required.

816f0a0c-2017ffff An Over-Temperature Condition has been removed on the [PhysicalMemoryElementName] on Subsystem [MemoryElementName].

Explanation: Memory DIMM is no longer in an over-temperature condition.

May also be shown as 816f0a0c2017ffff or 0x816f0a0c2017ffff

Severity: Info

Alert Category: Critical - Temperature

Serviceable: No

CIM Information: **Prefix:** PLAT and **ID:** 0147

SNMP Trap ID: 0

Automatically notify Support: No

User response: Information only; no action is required.

816f0a0c-2018ffff An Over-Temperature Condition has been removed on the [PhysicalMemoryElementName] on Subsystem [MemoryElementName].

Explanation: Memory DIMM is no longer in an over-temperature condition.

May also be shown as 816f0a0c2018ffff or 0x816f0a0c2018ffff

Severity: Info

Alert Category: Critical - Temperature

Serviceable: No

CIM Information: **Prefix:** PLAT and **ID:** 0147

SNMP Trap ID: 0

Automatically notify Support: No

User response: Information only; no action is required.

816f0a0c-2019ffff An Over-Temperature Condition has been removed on the [PhysicalMemoryElementName] on Subsystem [MemoryElementName].

Explanation: Memory DIMM is no longer in an over-temperature condition.

May also be shown as 816f0a0c2019ffff or 0x816f0a0c2019ffff

Severity: Info

Alert Category: Critical - Temperature

Serviceable: No

CIM Information: **Prefix:** PLAT and **ID:** 0147

SNMP Trap ID: 0

Automatically notify Support: No

User response: Information only; no action is required.

816f0a0c-201affff An Over-Temperature Condition has been removed on the [PhysicalMemoryElementName] on Subsystem [MemoryElementName].

Explanation: Memory DIMM is no longer in an over-temperature condition.

May also be shown as 816f0a0c201affff or 0x816f0a0c201affff

Severity: Info

Alert Category: Critical - Temperature

Serviceable: No

CIM Information: **Prefix:** PLAT and **ID:** 0147

SNMP Trap ID: 0

Automatically notify Support: No

User response: Information only; no action is required.

816f0a0c-201bffff An Over-Temperature Condition has been removed on the [PhysicalMemoryElementName] on Subsystem [MemoryElementName].

Explanation: Memory DIMM is no longer in an over-temperature condition.

May also be shown as 816f0a0c201bffff or 0x816f0a0c201bffff

Severity: Info

Alert Category: Critical - Temperature

Serviceable: No

CIM Information: **Prefix:** PLAT and **ID:** 0147

SNMP Trap ID: 0

Automatically notify Support: No

User response: Information only; no action is required.

816f0a0c-201cffff An Over-Temperature Condition has been removed on the [PhysicalMemoryElementName] on Subsystem [MemoryElementName].

Explanation: Memory DIMM is no longer in an over-temperature condition.

May also be shown as 816f0a0c201cffff or 0x816f0a0c201cffff

Severity: Info

Alert Category: Critical - Temperature

Serviceable: No

CIM Information: **Prefix:** PLAT and **ID:** 0147

SNMP Trap ID: 0

Automatically notify Support: No

User response: Information only; no action is required.

816f0a0c-201dffff An Over-Temperature Condition has been removed on the [PhysicalMemoryElementName] on Subsystem [MemoryElementName].

Explanation: Memory DIMM is no longer in an over-temperature condition.

May also be shown as 816f0a0c201dffff or 0x816f0a0c201dffff

Severity: Info

Alert Category: Critical - Temperature

Serviceable: No

CIM Information: **Prefix:** PLAT and **ID:** 0147

SNMP Trap ID: 0

Automatically notify Support: No

User response: Information only; no action is required.

816f0a0c-201effff An Over-Temperature Condition has been removed on the [PhysicalMemoryElementName] on Subsystem [MemoryElementName].

Explanation: Memory DIMM is no longer in an over-temperature condition.

May also be shown as 816f0a0c201effff or 0x816f0a0c201effff

Severity: Info

Alert Category: Critical - Temperature

Serviceable: No

CIM Information: **Prefix:** PLAT and **ID:** 0147

SNMP Trap ID: 0

Automatically notify Support: No

User response: Information only; no action is required.

816f0a0c-201fffff An Over-Temperature Condition has been removed on the [PhysicalMemoryElementName] on Subsystem [MemoryElementName].

Explanation: Memory DIMM is no longer in an over-temperature condition.

May also be shown as 816f0a0c201fffff or 0x816f0a0c201fffff

Severity: Info

Alert Category: Critical - Temperature

Serviceable: No

CIM Information: **Prefix:** PLAT and **ID:** 0147

SNMP Trap ID: 0

Automatically notify Support: No

User response: Information only; no action is required.

816f0a0c-2020ffff An Over-Temperature Condition has been removed on the [PhysicalMemoryElementName] on Subsystem [MemoryElementName].

Explanation: Memory DIMM is no longer in an over-temperature condition.

May also be shown as 816f0a0c2020ffff or 0x816f0a0c2020ffff

Severity: Info

Alert Category: Critical - Temperature

Serviceable: No

CIM Information: **Prefix:** PLAT and **ID:** 0147

SNMP Trap ID: 0

Automatically notify Support: No

User response: Information only; no action is required.

816f0a0c-2021ffff An Over-Temperature Condition has been removed on the [PhysicalMemoryElementName] on Subsystem [MemoryElementName].

Explanation: Memory DIMM is no longer in an over-temperature condition.

May also be shown as 816f0a0c2021ffff or 0x816f0a0c2021ffff

Severity: Info

Alert Category: Critical - Temperature

Serviceable: No

CIM Information: **Prefix:** PLAT and **ID:** 0147

SNMP Trap ID: 0

Automatically notify Support: No

User response: Information only; no action is required.

816f0a0c-2022ffff An Over-Temperature Condition has been removed on the [PhysicalMemoryElementName] on Subsystem [MemoryElementName].

Explanation: Memory DIMM is no longer in an over-temperature condition.

May also be shown as 816f0a0c2022ffff or 0x816f0a0c2022ffff

Severity: Info

Alert Category: Critical - Temperature

Serviceable: No

CIM Information: **Prefix:** PLAT and **ID:** 0147

SNMP Trap ID: 0

Automatically notify Support: No

User response: Information only; no action is required.

816f0a0c-2023ffff An Over-Temperature Condition has been removed on the [PhysicalMemoryElementName] on Subsystem [MemoryElementName].

Explanation: Memory DIMM is no longer in an over-temperature condition.

May also be shown as 816f0a0c2023ffff or 0x816f0a0c2023ffff

Severity: Info

Alert Category: Critical - Temperature

Serviceable: No

CIM Information: **Prefix:** PLAT and **ID:** 0147

SNMP Trap ID: 0

Automatically notify Support: No

User response: Information only; no action is required.

816f0a0c-2024ffff An Over-Temperature Condition has been removed on the [PhysicalMemoryElementName] on Subsystem [MemoryElementName].

Explanation: Memory DIMM is no longer in an over-temperature condition.

May also be shown as 816f0a0c2024ffff or 0x816f0a0c2024ffff

Severity: Info

Alert Category: Critical - Temperature

Serviceable: No

CIM Information: **Prefix:** PLAT and **ID:** 0147

SNMP Trap ID: 0

Automatically notify Support: No

User response: Information only; no action is required.

816f0a0c-2025ffff An Over-Temperature Condition has been removed on the [PhysicalMemoryElementName] on Subsystem [MemoryElementName].

Explanation: Memory DIMM is no longer in an over-temperature condition.

May also be shown as 816f0a0c2025ffff or 0x816f0a0c2025ffff

Severity: Info

Alert Category: Critical - Temperature

Serviceable: No

CIM Information: **Prefix:** PLAT and **ID:** 0147

SNMP Trap ID: 0

Automatically notify Support: No

User response: Information only; no action is required.

816f0a0c-2026ffff An Over-Temperature Condition has been removed on the [PhysicalMemoryElementName] on Subsystem [MemoryElementName].

Explanation: Memory DIMM is no longer in an over-temperature condition.

May also be shown as 816f0a0c2026ffff or 0x816f0a0c2026ffff

Severity: Info

Alert Category: Critical - Temperature

Serviceable: No

CIM Information: **Prefix:** PLAT and **ID:** 0147

SNMP Trap ID: 0

Automatically notify Support: No

User response: Information only; no action is required.

816f0a0c-2027ffff An Over-Temperature Condition has been removed on the [PhysicalMemoryElementName] on Subsystem [MemoryElementName].

Explanation: Memory DIMM is no longer in an over-temperature condition.

May also be shown as 816f0a0c2027ffff or 0x816f0a0c2027ffff

Severity: Info

Alert Category: Critical - Temperature

Serviceable: No

CIM Information: **Prefix:** PLAT and **ID:** 0147

SNMP Trap ID: 0

Automatically notify Support: No

User response: Information only; no action is required.

816f0a0c-2028ffff An Over-Temperature Condition has been removed on the [PhysicalMemoryElementName] on Subsystem [MemoryElementName].

Explanation: Memory DIMM is no longer in an over-temperature condition.

May also be shown as 816f0a0c2028ffff or 0x816f0a0c2028ffff

Severity: Info

Alert Category: Critical - Temperature

Serviceable: No

CIM Information: **Prefix:** PLAT and **ID:** 0147

SNMP Trap ID: 0

Automatically notify Support: No

User response: Information only; no action is required.

816f0a0c-2029ffff An Over-Temperature Condition has been removed on the [PhysicalMemoryElementName] on Subsystem [MemoryElementName].

Explanation: Memory DIMM is no longer in an over-temperature condition.

May also be shown as 816f0a0c2029ffff or 0x816f0a0c2029ffff

Severity: Info

Alert Category: Critical - Temperature

Serviceable: No

CIM Information: **Prefix:** PLAT and **ID:** 0147

SNMP Trap ID: 0

Automatically notify Support: No

User response: Information only; no action is required.

816f0a0c-202affff An Over-Temperature Condition has been removed on the [PhysicalMemoryElementName] on Subsystem [MemoryElementName].

Explanation: Memory DIMM is no longer in an over-temperature condition.

May also be shown as 816f0a0c202affff or 0x816f0a0c202affff

Severity: Info

Alert Category: Critical - Temperature

Serviceable: No

CIM Information: **Prefix:** PLAT and **ID:** 0147

SNMP Trap ID: 0

Automatically notify Support: No

User response: Information only; no action is required.

816f0a0c-202bffff An Over-Temperature Condition has been removed on the [PhysicalMemoryElementName] on Subsystem [MemoryElementName].

Explanation: Memory DIMM is no longer in an over-temperature condition.

May also be shown as 816f0a0c202bffff or 0x816f0a0c202bffff

Severity: Info

Alert Category: Critical - Temperature

Serviceable: No

CIM Information: **Prefix:** PLAT and **ID:** 0147

SNMP Trap ID: 0

Automatically notify Support: No

User response: Information only; no action is required.

816f0a0c-202cffff An Over-Temperature Condition has been removed on the [PhysicalMemoryElementName] on Subsystem [MemoryElementName].

Explanation: Memory DIMM is no longer in an over-temperature condition.

May also be shown as 816f0a0c202cffff or 0x816f0a0c202cffff

Severity: Info

Alert Category: Critical - Temperature

Serviceable: No

CIM Information: **Prefix:** PLAT and **ID:** 0147

SNMP Trap ID: 0

Automatically notify Support: No

User response: Information only; no action is required.

816f0a0c-202dffff An Over-Temperature Condition has been removed on the [PhysicalMemoryElementName] on Subsystem [MemoryElementName].

Explanation: Memory DIMM is no longer in an over-temperature condition.

May also be shown as 816f0a0c202dffff or 0x816f0a0c202dffff

Severity: Info

Alert Category: Critical - Temperature

Serviceable: No

CIM Information: **Prefix:** PLAT and **ID:** 0147

SNMP Trap ID: 0

Automatically notify Support: No

User response: Information only; no action is required.

816f0a0c-202effff An Over-Temperature Condition has been removed on the [PhysicalMemoryElementName] on Subsystem [MemoryElementName].

Explanation: Memory DIMM is no longer in an over-temperature condition.

May also be shown as 816f0a0c202effff or 0x816f0a0c202effff

Severity: Info

Alert Category: Critical - Temperature

Serviceable: No

CIM Information: **Prefix:** PLAT and **ID:** 0147

SNMP Trap ID: 0

Automatically notify Support: No

User response: Information only; no action is required.

816f0a0c-202fffff An Over-Temperature Condition has been removed on the [PhysicalMemoryElementName] on Subsystem [MemoryElementName].

Explanation: Memory DIMM is no longer in an over-temperature condition.

May also be shown as 816f0a0c202fffff or 0x816f0a0c202fffff

Severity: Info

Alert Category: Critical - Temperature

Serviceable: No

CIM Information: **Prefix:** PLAT and **ID:** 0147

SNMP Trap ID: 0

Automatically notify Support: No

User response: Information only; no action is required.

816f0a0c-2030ffff An Over-Temperature Condition has been removed on the [PhysicalMemoryElementName] on Subsystem [MemoryElementName].

Explanation: Memory DIMM is no longer in an over-temperature condition.

May also be shown as 816f0a0c2030ffff or 0x816f0a0c2030ffff

Severity: Info

Alert Category: Critical - Temperature

Serviceable: No

CIM Information: **Prefix:** PLAT and **ID:** 0147

SNMP Trap ID: 0

Automatically notify Support: No

User response: Information only; no action is required.

816f0a0c-2581ffff An Over-Temperature Condition has been removed on the [PhysicalMemoryElementName] on Subsystem [MemoryElementName].

Explanation: Memory DIMM is no longer in an over-temperature condition. All DIMMs. One of the DIMMs.

May also be shown as 816f0a0c2581ffff or 0x816f0a0c2581ffff

Severity: Info

Alert Category: Critical - Temperature

Serviceable: No

CIM Information: **Prefix:** PLAT and **ID:** 0147

SNMP Trap ID: 0

Automatically notify Support: No

User response: Information only; no action is required.

816f0a13-2401ffff System [ComputerSystemElementName] has recovered from a Fatal Bus Error.

Explanation: This message is for the use case when an implementation has detected that a system has recovered from a Bus Fatal Error. SMBus.

May also be shown as 816f0a132401ffff or 0x816f0a132401ffff

Severity: Info

Alert Category: Critical - Other

Serviceable: No

CIM Information: **Prefix:** PLAT and **ID:** 0245

SNMP Trap ID: 50

Automatically notify Support: No

User response: This is a UEFI detected event. The UEFI diagnostic code for this event can be found in the logged IMM message text. Please refer to the UEFI diagnostic code in the "UEFI diagnostic code" section of the Information Center for the appropriate user response.

816f0a13-2582ffff Bus [SensorElementName] has recovered from a Fatal Bus Error.

Explanation: IMM has detected that the system has recovered from a fatal bus error. (All PCI Error or One of PCI Error)

May also be shown as 816f0a132582ffff or 0x816f0a132582ffff

Severity: Info

Alert Category: Critical - Other

Serviceable: No

CIM Information: **Prefix:** PLAT and **ID:** 0245

SNMP Trap ID: 50

Automatically notify Support: No

User response: This is a UEFI detected event. The UEFI diagnostic code for this event can be found in the logged IMM message text. Please refer to the UEFI diagnostic code in the "UEFI diagnostic code" section of the Information Center for the appropriate user response.

816f0b13-0701ffff Bus [SensorElementName] is no longer operating in a degraded state.

Explanation: IMM has detected the DMI Bus is No Longer Degraded.

May also be shown as 816f0b130701ffff or 0x816f0b130701ffff

Severity: Info

Alert Category: Warning - Other

Serviceable: No

CIM Information: **Prefix:** PLAT and **ID:** 0247

SNMP Trap ID: 60

Automatically notify Support: No

User response: Information only; no action is required.

UEFI diagnostic codes

UEFI diagnostic codes can be generated when the compute node starts or while the compute node is running. UEFI diagnostic codes are logged in the IMM event log in the compute node.

For each event code, the following fields are displayed:

Event identifier
An identifier that uniquely identifies an event.

Event description
The logged message string that appears for an event.

Explanation
Additional information to explain why the event occurred.

Severity
An indication of the level of concern for the condition. In the event log, the severity is abbreviated to the first character.

- **Info:** The event was recorded for audit purposes, usually a user action or a change of states that is normal behavior.
- **Warning:** The event is not as severe as an error, but if possible, the condition should be corrected before it becomes an error. It might also be a condition that requires additional monitoring or maintenance.
- **Error:** The event is a failure or critical condition that impairs service or an expected function.

Alert Category
Similar events are grouped in categories. The alert category is in the following format:

severity - device

severity is one of the following severity levels:

- **Critical:** A key component in the server is no longer functioning.
- **Warning:** The event might progress to a critical level.
- **System:** The event is the result of a system error or a configuration change.

device component is the specific device in the compute node that caused the event to be generated.

User response
The actions that you should perform to resolve the event.

Perform the steps listed in this section in the order shown until the problem is solved. After you perform all of the actions that are described in this field, if you cannot solve the problem, contact IBM Support.

I.11002 [I.11002] A processor mismatch has been detected between one or more processors in the system.

Explanation: One or More Mismatched Processors Detected

Severity: Info

User response: Complete the following steps:

1. This message could occur with messages about other Processor configuration problems. Resolve those messages first.

2. If the problem persists, ensure that matching processors are installed (i.e., matching option part numbers, etc)
3. Verify that the Processor's are installed in the correct sockets according to the service information for this product. If not, correct that problem.
4. Check IBM support site for an applicable service bulletin or firmware update that applies to this Processor error.
5. (Trained Service technician only) Replace mismatching processor. Inspect Processor socket and replace the system board first if socket is damaged.

I.18005 **[I.18005] A discrepancy has been detected in the number of cores reported by one or more processor packages within the system.**

Explanation: Processors have mismatched number of cores

Severity: Info

User response: Complete the following steps:

1. If this is a newly installed option, ensure that matching Processors are installed in the correct Processor sockets according to the service information for this product.
2. Check IBM support site for an applicable service bulletin that applies to this Processor error.
3. (Trained Service technician only) Replace Processor. Inspect Processor socket and replace the system board first if socket is damaged.

I.18006 **[I.18006] A mismatch between the maximum allowed QPI link speed has been detected for one or more processor packages.**

Explanation: Processors have mismatched QPI Speed

Severity: Info

User response: Complete the following steps:

1. If this is a newly installed option, ensure that matching Processor CPUs are installed in the correct ProcessorCPU sockets according to the service information for this product.
2. Check IBM support site for an applicable retain tipservice bulletin or firmware update that applies to this Processor error.
3. (Trained Service technician only) Replace Processor. Inspect Processor socket and replace the system board first if socket is damaged.

I.18007 **[I.18007] A power segment mismatch has been detected for one or more processor packages.**

Explanation: Processors have mismatched Power Segments

Severity: Info

User response: Complete the following steps:

1. Processors installed do not have the same power requirements
2. Ensure that all Processors have matching power requirements (such as 65, 95, or 130 Watts)
3. If power requirements match, check IBM support site for an applicable service bulletin or firmware update that applies to this Processor error.
4. (Trained Service technician only) Replace Processor. Inspect Processor socket and replace the system board first if socket is damaged

---

I.18008 **[I.18008] Currently, there is no additional information for this event.**

Explanation: Processors have mismatched Internal DDR3 Frequency

Severity: Info

User response: Complete the following steps:

1. Verify that matching DIMMs are installed in the correct population sequence, according to the service information for this product. {Add link to Memory chart.} Correct any configuration issues found.

2. (Trained Service technician only) Replace associated Processor. Inspect Processor socket and replace the system board first if socket is damaged

---

I.18009 **[I.18009] A core speed mismatch has been detected for one or more processor packages.**

Explanation: Processors have mismatched Core Speed

Severity: Info

User response: Complete the following steps:

1. Verify that matching processors are installed in the correct processor sockets according to the service information for this product. Correct any mismatch issues found.
2. Check IBM support site for an applicable service bulletin or firmware update that applies to this Processor error.
3. (Trained Service technician only) Replace Processor. Inspect Processor socket and replace the system board first if socket is damaged.

I.1800A **[I.1800A] A mismatch has been detected between the speed at which a QPI link has trained between two or more processor packages.**

Explanation: Processors have mismatched Bus Speed

Severity: Info

User response: Complete the following steps:

1. Verify that the Processor is a valid option that is listed as a Server Proven device for this system. If not, remove the Processor and install a Server Proven one.
2. Verify that matching Processors are installed in the correct Processor sockets according to the service information for this product. Correct any mismatch found.
3. Check IBM support site for an applicable service bulletin or firmware update that applies to this processor error.
4. (Trained Service technician only) Replace the Processor. Inspect Processor socket and replace the system board first if socket is damaged

---

I.1800B **[I.1800B] A cache size mismatch has been detected for one or more processor packages.**

Explanation: Processors have one or more cache levels with mismatched size

Severity: Info

User response: Complete the following steps:

1. Verify that matching processors are installed in the correct processor sockets according to the service information for this product. Correct any mismatch found.
2. Check IBM support site for an applicable service bulletin or firmware update that applies to this Processor error.
3. (Trained Service technician only) Replace the system board.

I.1800C **[I.1800C] A cache type mismatch has been detected for one or more processor packages.**

Explanation: Processors have one or more cache levels with mismatched type

Severity: Info

User response: Complete the following steps:

1. Verify that matching Processors are installed in the correct Processor sockets according to the service information for this product.
2. Check IBM support site for an applicable service bulletin or firmware update that applies to this Processor error.
3. (Trained Service technician only) Replace the system board.

I.1800D **[I.1800D] A cache associativity mismatch has been detected for one or more processor packages.**

Explanation: Processors have one or more cache levels with mismatched associativity

Severity: Info

User response: Complete the following steps:

1. Verify that matching Processors are installed in the correct Processor sockets according to the service information for this product.
2. Check IBM support site for an applicable service bulletin or firmware update that applies to this Processor error.
3. (Trained Service technician only) Replace the system board.

I.1800E **[I.1800E] A processor model mismatch has been detected for one or more processor packages.**

Explanation: Processors have mismatched Model Number

Severity: Info

User response: Complete the following steps:

1. Verify that matching Processors are installed in the correct Processor sockets according to the service information for this product.
2. Check IBM support site for an applicable service bulletin or firmware update that applies to this Processor error.
3. (Trained Service technician only) Replace the system board.

I.1800F **[I.1800F] A processor family mismatch has been detected for one or more processor packages.**

Explanation: Processors have mismatched Family

Severity: Info

User response: Complete the following steps:

1. Verify that matching Processors are installed in the correct Processor sockets according to the service information for this product.
2. Check IBM support site for an applicable service bulletin or firmware update that applies to this Processor error.
3. (Trained Service technician only) Replace the system board.

I.18010 **[I.18010] A processor stepping mismatch has been detected for one or more processor packages.**

Explanation: Processors of the same model have mismatched Stepping ID

Severity: Info

User response: Complete the following steps:

1. Verify that matching Processors are installed in the correct Processor sockets according to the service information for this product.
2. Check IBM support site for an applicable service bulletin or firmware update that applies to this Processor error.
3. (Trained Service technician only) Replace the system board.

I.2018002 **[I.2018002] The device found at Bus % Device % Function % could not be configured due to resource constraints. The Vendor ID for the device is % and the Device ID is %.**

Explanation: OUT_OF_RESOURCES (PCI Option ROM)

Severity: Info

User response: Complete the following steps:

1. If this PCIe device and/or any attached cables were recently installed, moved, serviced or upgraded, reseat adapter and any attached cables.
2. Check IBM support site for any applicable service bulletin or UEFI or adapter firmware update that applies to this error. NOTE: It may be necessary to disable unused option ROMs from UEFI F1 setup or ASU or using adapter manufacturer utilities so that adapter firmware can be updated.

3. Move card to a different slot. If slot not available or error re-occurs, replace adapter.
4. (Trained Service technician only) If adapter was moved to a different slot and error did not re-occur, verify that this is not a system limitation and then replace the system board. Also, if this is not the initial installation and the error persists after adapter replacement, replace system board.

I.2018003 [I.2018003] A bad option ROM checksum was detected for the device found at Bus % Device % Function %. The Vendor ID for the device is % and the Device ID is %.

Explanation: ROM CHECKSUM ERROR

Severity: Info

User response: Complete the following steps:

1. If this PCIe device and/or any attached cables were recently installed, moved, serviced or upgraded, reseat adapter and any attached cables.
2. Move adapter to a different system slot, if available.
3. Check IBM support site for any applicable service bulletin or UEFI or adapter firmware update that applies to this error. NOTE: It may be necessary to configure slot to Gen1 or to use special utility software so that adapter firmware can be upgraded. Gen1/Gen2 settings can be configured via F1 Setup -> System Settings -> Devices and I/O Ports -> PCIe Gen1/Gen2/Gen3 Speed Selection, or the ASU Utility.
4. Replace adapter.

I.3048005 [I.3048005] UEFI has booted from the backup flash bank.

Explanation: Booting Backup UEFI Image

Severity: Info

User response: Complete the following step:

Refer to service information for this product section on UEFI Recovery to return system to primary bank.

I.3808004 [I.3808004] The IMM System Event log (SEL) is full.

Explanation: IPMI System Event Log is Full

Severity: Info

User response: Complete the following steps:

1. Use IMM Web Interface to clear event log.
2. If IMM communication is unavailable, use F1 Setup to access System Event Logs Menu and Choose Clear IMM System Event Log and Restart Server.

I.3818001 [I.3818001] The firmware image capsule signature for the currently booted flash bank is invalid.

Explanation: Current Bank CRTM Capsule Update Signature Invalid

Severity: Info

User response: Complete the following steps:

1. Reboot system. Will come up on backup UEFI image. Reflash the primary UEFI image.
2. If error does not persist no additional recovery action is required.
3. If error persists, or boot is unsuccessful, (Trained service technician only) Replace the system board.

I.3818002 [I.3818002] The firmware image capsule signature for the non-booted flash bank is invalid.

Explanation: Opposite Bank CRTM Capsule Update Signature Invalid

Severity: Info

User response: Complete the following steps:

1. Reflash backup UEFI image.

2. If error does not persist no additional recovery action is required.
3. If error persists, or boot is unsuccessful, (Trained service technician only) Replace the system board.

I.3818003 [I.3818003] The CRTM flash driver could not lock the secure flash region.

Explanation: CRTM Could not lock secure flash region

Severity: Info

User response: Complete the following steps:

1. If system failed to boot successfully, DC cycle system.
2. If system boots to F1 setup, flash UEFI image and reset bank to primary (if required). If system boots without error, recovery is complete and no additional action is required.
3. If system fails to boot, or if flash attempt fails, (Trained service technician only) Replace the system board.

I.3868000 [I.3868000] BOFM: System reset performed to reset adapters.

Explanation: BOFM: System reset performed to reset adapters

Severity: Info

User response: Complete the following step:

No user intervention is required for this event. This is for informational purposes only.

I.3868003 [I.3868003] BOFM: Configuration to large for compatibility mode.

Explanation: BOFM: Configuration too large for compatibility mode

Severity: Info

User response: Complete the following step:

No user intervention required for this event. This is for informational purposes only.

I.58015 [I.58015] Memory spare copy initiated.

Explanation: Spare Copy Started

Severity: Info

User response: Complete the following step:

No user intervention is required for this event. This is for informational purposes only.

I.580A4 [I.580A4] Memory population change detected.

Explanation: DIMM Population Change Detected

Severity: Info

User response: Complete the following step:

Check system event log for uncorrected DIMM failures and replace those DIMMs.

I.580A5 [I.580A5] Mirror Fail-over complete. DIMM number % has failed over to to the mirrored copy.

Explanation: DIMM Mirror Fail-over Detected

Severity: Info

User response: Complete the following step:

Check the system-event log for uncorrected DIMM failures and replace those DIMMs.

I.580A6 **[I.580A6] Memory spare copy has completed successfully.**

Explanation: Spare Copy Complete

Severity: Info

User response: Complete the following step:

Check system log for related DIMM failures and replace those DIMMs.

S.1100C **[S.1100C] An uncorrectable error has been detected on processor %.**

Explanation: Uncorrectable processor error detected

Severity: Error

User response: Complete the following steps:

1. Check IBM support site for an applicable service bulletin or firmware update that applies to this error.
2. Reboot system. If problem persists escalate to the next level of supprt.

S.2011001 **[S.2011001] An Uncorrected PCIe Error has Occurred at Bus % Device % Function %. The Vendor ID for the device is % and the Device ID is %.**

Explanation: PCI SERR Detected

Severity: Error

User response: Complete the following steps:

1. If this node and/or any attached cables were recently installed, moved, serviced or upgraded, a. Reseat Adapter and any attached cables. b. Reload Device Driver c. If device is not recognized, reconfiguring slot to Gen1 or Gen2 may be required. Gen1/Gen2 settings can be configured via F1 Setup -> System Settings -> Devices and I/O Ports -> PCIe Gen1/Gen2/Gen3 Speed Selection, or the ASU Utility.
2. Check IBM support site for an applicable device driver, firmware update, service information for this product revision, or other information that applies to this error. Load new device driver and any required firmware updates.
3. If problem persists, then remove Adapter Card. If system reboots successfully without the adapter, replace that card.
4. (Trained Service technician only) Replace the processor.

S.2018001 **[S.2018001] An Uncorrected PCIe Error has Occurred at Bus % Device % Function %. The Vendor ID for the device is % and the Device ID is %.**

Explanation: PCIe Uncorrected Error Detected

Severity: Error

User response: Complete the following steps:

1. If this node and/or any attached cables were recently installed, moved, serviced or upgraded, a. Reseat Adapter and any attached cables. b. Reload Device Driver c. If device is not recognized, reconfiguring slot to Gen1 or Gen2 may be required. Gen1/Gen2 settings can be configured via F1 Setup -> System Settings -> Devices and I/O Ports -> PCIe Gen1/Gen2/Gen3 Speed Selection, or the ASU Utility.
2. Check IBM support site for an applicable device driver, firmware update, service information for this product revision, or other information that applies to this error. Load new device driver and any required firmware updates.
3. If problem persists, then remove Adapter Card. If system reboots successfully without the adapter, replace that card.
4. Trained Service technician only) Replace the processor.

S.3020007 **[S.3020007] A firmware fault has been detected in the UEFI image.**

Explanation: Internal UEFI Firmware Fault Detected, System halted

Severity: Error

User response: Complete the following steps:
1. Check IBM support site for an applicable service bulletin or firmware update that applies to this error.
2. Reflash UEFI image.
3. (Trained service technician only) Replace the system board.

S.3028002 **[S.3028002] Boot permission timeout detected.**

Explanation: Boot Permission Negotiation Timeout

Severity: Error

User response: Complete the following steps:
1. Check CMM/IMM logs for communication errors and resolve.
2. Reseat system
3. If problem persists escalate to the next level of support

S.3030007 **[S.3030007] A firmware fault has been detected in the UEFI image.**

Explanation: Internal UEFI Firmware Fault Detected, System halted

Severity: Error

User response: Complete the following steps:
1. Check IBM support site for an applicable service bulletin or firmware update that applies to this error.
2. Reflash UEFI image.
3. (Trained service technician only) Replace the system board.

S.3040007 **[S.3040007] A firmware fault has been detected in the UEFI image.**

Explanation: Internal UEFI Firmware Fault Detected, System halted

Severity: Error

User response: Complete the following steps:
1. Check IBM support site for an applicable service bulletin or firmware update that applies to this error.
2. Reflash UEFI image.
3. (Trained service technician only) Replace the system board.

S.3050007 **[S.3050007] A firmware fault has been detected in the UEFI image.**

Explanation: Internal UEFI Firmware Fault Detected, System halted

Severity: Error

User response: Complete the following steps:
1. Check IBM support site for an applicable service bulletin or firmware update that applies to this error.
2. Reflash UEFI image.
3. (Trained service technician only) Replace the system board.

S.3058004 **[S.3058004] A Three Strike boot failure has occurred. The system has booted with default UEFI settings.**

Explanation: POST failure has occurred! System booted with default settings.

Severity: Error

User response: Complete the following steps:

1. This event resets UEFI to the default settings for the next boot. If successful, user is forced into F1 setup. Original UEFI settings are still present.
2. If User did not intentionally trigger the reboots, check logs for probable cause.
3. Undo recent system changes (settings or devices added). If not recent system changes, remove all options then remove CMOS battery for 30 seconds to clear CMOS contents. Verify that the system boots. Then, re-install options one at a time to locate the problem.
4. Check IBM support site for an applicable service bulletin or firmware update that applies to this error.
5. Reflash UEFI firmware.
6. Remove and re-install CMOS battery for 30 seconds to clear CMOS contents
7. (Trained service technician only) Replace the system board.

S.3060007 [S.3060007] A firmware fault has been detected in the UEFI image.

Explanation: Internal UEFI Firmware Fault Detected, System halted

Severity: Error

User response: Complete the following steps:

1. Check IBM support site for an applicable service bulletin or firmware update that applies to this error.
2. Reflash UEFI image.
3. (Trained service technician only) Replace the system board.

S.3070007 [S.3070007] A firmware fault has been detected in the UEFI image.

Explanation: Internal UEFI Firmware Fault Detected, System halted

Severity: Error

User response: Complete the following steps:

1. Check IBM support site for an applicable service bulletin or firmware update that applies to this error.
2. Reflash UEFI image.
3. (Trained service technician only) Replace the system board.

S.3108007 [S.3108007] The default system settings have been restored.

Explanation: System Configuration Restored to Defaults

Severity: Error

User response: Complete the following steps:

Check IBM support site for an applicable service bulletin or firmware update that applies to this error.

S.3818004 [S.3818004] The CRTM flash driver could not successfully flash the staging area. A failure occurred.

Explanation: CRTM Update Failed

Severity: Error

User response: Complete the following steps:

1. Continue booting sytem. If system does not reset, manually reset the system.
2. If the error is not reported on the subsequent boot, no additional recovery action is required.
3. If the error persists, continue booting system and reflash UEFI image.
4. (Trained service technician only) Replace the system board.

S.3818007 **[S.3818007] The firmware image capsules for both flash banks could not be verified.**

Explanation: CRTM image capsule could not be verified

Severity: Error

User response: Complete the following steps:

1. If system failed to boot successfully, DC cycle system.
2. If system boots to F1 steup, flash UEFI image and reset bank to primary (if required). If system boots without error, recovery is complete and no additional action is required.
3. If system fails to boot, or if flash attempt fails, (Trained service technician only) Replace the system board.

S.51003 **[S.51003] An uncorrectable memory error was detected in DIMM slot % on rank %.**

Explanation: [S.51003] An uncorrectable memory error was detected on processor % channel %. The failing DIMM within the channel could not be determined.

[S.51003] An uncorrectable memory error has been detected during POST. Fatal Memory Error Occurred

Severity: Error

User response: Complete the following steps:

1. If the node has recently been installed, moved, serviced, or upgraded, verify that the DIMM is properly seated and visually verify that there is no foreign material in any DIMM connector on that memory channel. If either of these conditions is found, correct and retry with the same DIMM. (Note: Event Log may contain a recent 00580A4 event denoting detected change in DIMM population that could be related to this problem.)
2. If no problem is observed on the DIMM connectors or the problem persists, replace the DIMM identified by LightPath and/or event log entry.
3. If problem re-occurs on the same DIMM connector, replace the other DIMMs on the same memory channel.
4. Check IBM support site for an applicable service bulletin or firmware update that applies to this memory error.
5. (Trained Service technician only) If problem re-occurs on the same DIMM connector, inspect connector for damage. If found, replace system board.
6. (Trained Service technician only) Replace affected Processor.
7. (Trained Service technician only) Replace system board.

S.51006 **[S.51006] A memory mismatch has been detected. Please verify that the memory configuration is valid.**

Explanation: One or More Mismatched DIMMs Detected

Severity: Error

User response: Complete the following steps:

1. Could follow an uncorrectable memory error or failed memory test. Check log and service that event first. DIMMs disabled by other errors or actions could cause this event.
2. Verify that the DIMMs are installed in the correct population sequence, according to the service information for this product.
3. Disable memory mirroring and sparing. If this action eliminates the mismatch, check IBM Support site for information related to this problem.
4. Reflash UEFI firmware.
5. Replace DIMM
6. (Trained Service technician only) Replace Processor.

S.51009 **[S.51009] No system memory has been detected.**

Explanation: No Memory Detected

Severity: Error

User response: Complete the following steps:

1. Make sure that one or more DIMMs are installed in the server.
2. If no memory fault is recorded in the logs and no DIMM connector error LEDs are lit, verify that all DIMM connectors are enabled using the Setup utility or the Advanced Settings Utility (ASU).
3. Re-Install all DIMMs verifying the correct population sequence, according to the service information for this product.
4. (Trained service technician only) Replace the processor.
5. (Trained service technician only) Replace the system board.

S.58008 [S.58008] A DIMM has failed the POST memory test.

Explanation: DIMM Failed Memory Test

Severity: Error

User response: Complete the following steps:

1. You must AC-cycle the system to re-enable affected DIMM connector or re-enable manually using F1 setup
2. If the node has been recently installed, serviced, moved, or upgraded, check to ensure that DIMMs are firmly seated and that no foreign material can be seen in the DIMM connector. If either condition is observed, correct and retry with the same DIMM. (Note: Event Log may contain a recent 00580A4 event denoting detected change in DIMM population that could be related to this problem.)
3. If problem persists, replace the DIMM identified by LightPath and/or event log entry.
4. If problem re-occurs on the same DIMM connector, swap the other DIMMs on the same memory channel across channels one at a time to a different memory channel or Processor. (check service information for this product/Install guide for population requirements for sparing/paring modes). If problem follows a moved DIMM to a different memory channel, replace that DIMM.
5. Check IBM support site for an applicable service bulletin or firmware update that applies to this memory error.
6. (Trained service technician only) If problem stays with the original DIMM connector, re-inspect DIMM connector for foreign material and remove, if found. If connector is damaged, replace system board.
7. (Trained service technician only) Remove affected Processor and inspect Processor socket pins for damaged or mis-aligned pins. If damage is found, or this is an upgrade Processor, replace system board. If there are multiple Processor's, swap Processor's to move affected Procesor to another Processor socket and retry. If problem follows the affected Processor (or there is only one Processor), replace the affected Processor.
8. (Trained Service technician only) Replace the system board.

S.68005 [S.68005] An error has been detected by the the IIO core logic on Bus %. The Global Fatal Error Status register contains %. The Global Non-Fatal Error Status register contains %. Please check error logs for the presence of additional downstream device error data.

Explanation: Critical IOH-PCI Error

Severity: Error

User response: Complete the following steps:

1. Check log for a separate error for an associated PCIe device and service that error.
2. Check IBM support site for an applicable service bulletin or firmware update for the system or adapter that applies to this error.
3. (Trained Service technician only) Replace the system board.

S.680B8 [S.680B8] Internal QPI Link Failure Detected.

Explanation: Internal QPI Link Failure Detected

Severity: Error

User response: Complete the following steps:

1. Check IBM support site for an applicable service bulletin or firmware update that applies to this error.
2. Inspect processor socket for foreign debris or damage. If debris is found remove debris.
3. If error recurs, or socket damage is found, replace the system board (Trained Service technician only) .

S.680B9 **[S.680B9] External QPI Link Failure Detected.**

Explanation: External QPI Link Failure Detected

Severity: Error

User response: Complete the following steps:

1. Check IBM support site for an applicable service bulletin or firmware update that applies to this error.
2. Inspect processor socket for foreign debris or damage. If debris is found remove debris.
3. If error recurs, or socket damage is found, replace the system board (Trained Service technician only) .

W.11004 **[W.11004] A processor within the system has failed the BIST.**

Explanation: Processor Self Test Failure Detected

Severity: Warning

User response: Complete the following steps:

1. If the Processor or firmware was just updated, check IBM support site for an applicable service bulletin or firmware update that applies to this Processor error.
2. (Trained service technician only) If there are multiple Processor's, swap Processor's to move affected Processor to another Processor socket and retry. If problem follows the affected Processor, or this is a single Processor system, replace the Processor. Inspect Processor socket on each Processor removal and replace system board first if damaged or mis-aligned pins are found.
3. (Trained Service technician only) Replace the system board.

W.3048006 **[W.3048006] UEFI has booted from the backup flash bank due to an Automatic Boot Recovery (ABR) event.**

Explanation: Automated Boot Recovery, Booting Backup UEFI Image

Severity: Warning

User response: Complete the following steps:

1. Check IBM support site for an applicable service bulletin or firmware update that applies to this error.
2. Reflash Primary UEFI image. Refer to UEFI Recovery section of service information for this product.
3. (Trained service technician only) Replace the system board.

W.305000A **[W.305000A] An invalid date and time have been detected.**

Explanation: RTC Date and Time Incorrect

Severity: Warning

User response: Complete the following steps:

1. Check IMM/chassis event log. This event should immediately precede 0068002 error. Service that event or any other battery related errors.
2. Use F1 Setup to reset date and time. If problem returns after a system reset, replace CMOS battery.
3. If problem persists then check IBM support site for an applicable service bulletin or firmware update that applies to this error.
4. Trained Service technician only) Replace the system board.

W.3058009 **[W.3058009] DRIVER HEALTH PROTOCOL: Missing Configuraiton. Requires Change Settings From F1.**

Explanation: DRIVER HEALTH PROTOCOL: Missing Configuration. Requires Change Settings From F1

Severity: Warning

User response: Complete the following steps:

1. Go to System Settings > Settings > Driver Health Status List and find a driver/controller reporting Configuration Required status.
2. Search for the driver menu from System Settings and change settings appropriately.
3. Save settings and restart system.

W.305800A [W.305800A] DRIVER HEALTH PROTOCOL: Reports 'Failed' Status Controller.

Explanation: DRIVER HEALTH PROTOCOL: Reports 'Failed' Status Controller

Severity: Warning

User response: Complete the following steps:
1. Reboot the system.
2. If problem persists, switch to backup UEFI or reflash current UEFI image.
3. (Trained Service Technician Only) Replace system board.

W.305800B [W.305800B] DRIVER HEALTH PROTOCOL: Reports 'Reboot' Required Controller.

Explanation: DRIVER HEALTH PROTOCOL: Reports 'Reboot' Required Controller

Severity: Warning

User response: Complete the following steps:
1. No action required – system will reboot at the end of POST.
2. If problem persists, switch to backup UEFI or reflash current UEFI image.
3. (Trained Service Technician Only) Replace system board.

W.305800C [W.305800C] DRIVER HEALTH PROTOCOL: Reports 'System Shutdown' Required Controller.

Explanation: DRIVER HEALTH PROTOCOL: Reports 'System Shutdown' Required Controller

Severity: Warning

User response: Complete the following steps:
1. Reboot the system.
2. If problem persists, switch to backup UEFI or reflash current UEFI image.
3. (Trained Service Technician Only) Replace system board.

W.305800D [W.305800D] DRIVER HEALTH PROTOCOL: Disconnect Controller Failed. Requires 'Reboot'.

Explanation: DRIVER HEALTH PROTOCOL: Disconnect Controller Failed. Requires 'Reboot'

Severity: Warning

User response: Complete the following steps:
1. Reboot the system to reconnect the controller.
2. If problem persists, switch to backup UEFI or reflash current UEFI image.
3. (Trained Service Technician Only) Replace system board.

W.305800E [W.305800E] DRIVER HEALTH PROTOCOL: Reports Invalid Health Status Driver.

Explanation: DRIVER HEALTH PROTOCOL: Reports Invalid Health Status Driver

Severity: Warning

User response: Complete the following steps:
1. Reboot the system.
2. If problem persists, switch to backup UEFI or reflash current UEFI image.
3. (Trained Service Technician Only) Replace system board.

W.3808000 [W.3808000] An IMM communication failure has occurred.

Explanation: IMM Communication Failure

Severity: Warning

User response: Complete the following steps:
1. Reset the IMM from the CMM.
2. Use CMM to remove AUX power from the node. This will reboot the entire node.
3. Check IBM support site for an applicable service bulletin or firmware update that applies to this error.
4. Reflash UEFI Firmware.
5. (Trained service technician only) Replace the system board.

W.3808002 [W.3808002] An error occurred while saving UEFI settings to the IMM.

Explanation: Error Updating System Configuration to IMM

Severity: Warning

User response: Complete the following steps:
1. Use F1 Setup, Verify Settings and Save Settings to recover settings.
2. Reset the IMM from the CMM.
3. Use CMM to remove AUX power from the node. This will reboot the entire node.
4. Check IBM support site for an applicable service bulletin or firmware update that applies to this error.
5. Reflash IMM Firmware.
6. Remove and re-install CMOS battery for 30 seconds to clear CMOS contents.
7. Trained Service technician only) Replace the system board.

W.3808003 .[W.3808003] Unable to retrieve the system configuration from the IMM.

Explanation: Error Retrieving System Configuration from IMM

Severity: Warning

User response: Complete the following steps:
1. Use F1 Setup, Verify Settings and Save Settings to recover settings.
2. Reset the IMM from the CMM.
3. Use CMM to remove AUX power from the node. This will reboot the entire node.
4. Check IBM support site for an applicable service bulletin or firmware update that applies to this error.
5. Reflash IMM Firmware.
6. Remove and re-install CMOS battery for 30 seconds to clear CMOS contents.
7. Trained Service technician only) Replace the system board.

W.3818005 [W.3818005] The CRTM flash driver could not successfully flash the staging area. The update was aborted

Explanation: CRTM Update Aborted

Severity: Warning

User response: Complete the following steps:
1. Continue booting system. If system does not reset, manually reset the system.
2. If the error is not reported on the subsequent boot, no additional recovery action is required.
3. If the event persists, continue booting system and reflash UEFI image.
4. (Trained service technician only) Replace the system board.

W.3868001 [W.3868001] BOFM: Reset loop avoided - Multiple resets not allowed.

Explanation: BOFM: Reset loop avoided - Multiple resets not allowed

Severity: Warning

User response: Complete the following steps:

1. Update all firmware (including adapter firmware) to the latest levels.
2. If problem persists escalate to the next level of support.

W.3868002 [W.3868002] BOFM: Error communicating with the IMM - BOFM may not be deployed correctly.

Explanation: BOFM: Error communicating with the IMM - BOFM may not be deployed correctly

Severity: Warning

User response: Complete the following steps:

1. Update all firmware (including adapter firmware) to the latest levels.
2. If problem persists escalate to the next level of support.

W.3938002 [W.3938002] A boot configuration error has been detected.

Explanation: Boot Configuration Error

Severity: Warning

User response: Complete the following steps:

1. F1 Setup -> Save Settings
2. Retry OOB config update

W.50001 [W.50001] A DIMM has been disabled due to an error detected during POST.

Explanation: DIMM Disabled

Severity: Warning

User response: Complete the following steps:

1. If the DIMM was disabled because of a memory fault, follow the procedure for that event.
2. If no memory fault is recorded in the logs and no DIMM connector error LEDs are lit, re-enable the DIMM through the Setup utility or the Advanced Settings Utility (ASU).
3. If problem persists, Power cycle the node from management console.
4. Reset IMM to default settings.
5. Reset UEFI to default settings.
6. Reflash IMM and UEFI firmware.
7. (Trained Service technician only) Replace system board.

W.58001 [W.58001] The PFA Threshold limit (correctable error logging limit) has been exceeded on DIMM number % at address %. MC5 Status contains % and MC5 Misc contains %.

Explanation: DIMM PFA Threshold Exceeded

Severity: Warning

User response: Complete the following steps:

1. If the node has recently been installed, moved, serviced, or upgraded, verify that the DIMM is properly seated and visually verify that there is no foreign material in any DIMM connector on that memory channel. If either of these conditions is found, correct and retry with the same DIMM. (Note: Event Log may contain a recent 00580A4 event denoting detected change in DIMM population that could be related to this problem.)
2. Check IBM support site for an applicable firmware update that applies to this memory error. The release notes will list the known problems the update addresses.

3. If the previous steps do not resolve the problem, at the next maintenance opportunity, replace the affected DIMM (as indicated by LightPath and/or failure log entry).
4. If PFA re-occurs on the same DIMM connector, swap the other DIMMs on the same memory channel one at a time to a different memory channel or Processor. (check service information for this product/Install guide for population requirements for sparing/paring modes). If PFA follows a moved DIMM to any DIMM connector on the different memory channel, replace the moved DIMM.
5. Check IBM support site for an applicable Service Bulletins (Service bulletins) that applies to this memory error. (Link to IBM support service bulletins)
6. (Trained service technician only) If problem continues to re-occur on the same DIMM connector, inspect DIMM connector for foreign material and remove, if found. If connector is damaged, replace system board.
7. (Trained service technician only) Remove affected Processor and inspect Processor socket pins for damaged or mis-aligned pins. If damage is found or Processor is an upgrade part, replace system board.
8. (Trained Service technician only) Replace affected processor.
9. (Trained Service technician only) Replace system board.

W.58007 [W.58007] Invalid memory configuration (Unsupported DIMM Population) detected. Please verify memory configuration is valid.

Explanation: Unsupported DIMM Population

Severity: Warning

User response: Complete the following steps:

1. Could follow an uncorrectable memory error or failed memory test. Check log and service that event first. DIMMs disabled by other errors or actions could cause this event.
2. Ensure that the DIMM connectors are populated according to the guidelines in the service information for this product.

W.580A1 [W.580A1] Invalid memory configuration for Mirror Mode. Please correct memory configuration.

Explanation: Unsupported DIMM Population for Mirror Mode

Severity: Warning

User response: Complete the following steps:

1. If a DIMM connector error LED is lit, resolve the failure.
2. Make sure that the DIMM connectors are correctly populated for mirroring mode, according to the service information for this product.

W.580A2 [W.580A2] Invalid memory configuration for Sparing Mode. Please correct memory configuration.

Explanation: Unsupported DIMM Population for Spare Mode

Severity: Warning

User response: Complete the following step:

Make sure that the DIMM connectors are correctly populated for sparing mode, according to the service information for this product.

W.68002 [W.68002] A CMOS battery error has been detected

Explanation: CMOS Battery Fault

Severity: Warning

User response: Complete the following steps:

1. If the system was recently Installed, Moved, or Serviced, make sure the battery is properly seated.
2. Check IBM support site for an applicable service bulletin or firmware update that applies to this error.
3. Replace CMOS Battery
4. (Trained Service technician only) Replace the system board.

DSA messages

Use this information to review the diagnostic error messages and solve many errors.

If the diagnostic programs generate error codes that are not listed in the table, make sure that the latest level of the UEFI code is installed. To download the latest firmware for the compute node, go to http://www.ibm.com/support/fixcentral/.

The following table describes the messages that the diagnostic programs might generate and suggested actions to correct the detected problems. Follow the suggested actions in the order in which they are listed in the action column. In the error codes, *x* can be any numeral or letter. However, if the three-digit number in the central position of the code is 000, 195, or 197, *do not* replace a CRU. These numbers appearing in the central position of the code have the following meanings:

000 The compute node passed the test. Do not replace a CRU.

195 The Esc key was pressed to end the test. Do not replace a CRU.

197 This is a warning error, but it does not indicate a hardware failure; do not replace a CRU. Take the action that is indicated in the Action column, but *do not replace a CRU*. See the description for **Warning** in "Diagnostic text messages" on page 66 for more information.

Microprocessor test

Use this information to diagnose and solve microprocessor test errors.

Follow the suggested actions in the order in which they are listed in the Action column until the problem is solved.

- See Chapter 5, "Parts listing, Types 7917 and 2584," on page 51 to determine which are components are consumable parts and which components are customer replaceable units (CRUs).
- If an action step is preceded by "(Trained service technician only)," that step must be performed only by a trained service technician.

089-000-xxx

Explanation: Passed the CPU stress test

User response: Information only; no action is required.

089-801-xxx

Explanation: Aborted due to an internal program error.

User response: Complete the following steps:

1. If the compute node has stopped responding, turn off and restart the compute node. See "Turning off the compute node" on page 15 and "Turning on the compute node" on page 13.
2. Make sure that the DSA code is up-to-date, upgrade if necessary; then, run the test again. The latest code can be found at http://www.ibm.com/support/entry/portal/docdisplay?lndocid=SERV-DSA.
3. Make sure that the system firmware level is up-to-date, upgrade if necessary; then, run the test again. The installed firmware level can be found in the DSA log within the Firmware/VPD section for this component. The latest level firmware for this component can be found at http://www.ibm.com/support/fixcentral/.
4. If the compute node has stopped responding, turn off and restart the compute node; then, run the test again. See "Turning off the compute node" on page 15 and "Turning on the compute node" on page 13.
5. (Trained service technician only) If the component failure remains, see Chapter 7, "Installing, removing, and replacing compute node components," on page 487 to replace the failed component.

089-802-xxx

Explanation: Aborted due a system resource availability error.

User response: Complete the following steps:

1. Make sure at least 1 GB of memory is installed in the compute node (see "Installing a DIMM" on page 502).
2. Make sure that the DSA code is up-to-date, upgrade if necessary; then, run the test again. The latest code can be found at http://www.ibm.com/support/entry/portal/docdisplay?lndocid=SERV-DSA.
3. Make sure that the system firmware level is up-to-date, upgrade if necessary; then, run the test again. The installed firmware level can be found in the DSA log within the Firmware/VPD section for this component. The latest level firmware for this component can be found at http://www.ibm.com/support/fixcentral/.
4. If the compute node has stopped responding, turn off and restart the compute node; then, run the test again. See "Turning off the compute node" on page 15 and "Turning on the compute node" on page 13.
5. (Trained service technician only) If the component failure remains, see Chapter 7, "Installing, removing, and replacing compute node components," on page 487 to replace the failed component.

IMM2 self-tests

Use this information to diagnose and solve IMM2 self-test errors.

Follow the suggested actions in the order in which they are listed in the Action column until the problem is solved. See Chapter 5, "Parts listing, Types 7917 and 2584," on page 51 to determine which components are Tier 1 customer replaceable units (CRUs) and which components are Tier 2 customer replaceable units (CRUs).

Ethernet device tests

Use this information to diagnose and solve Ethernet device errors.

Follow the suggested actions in the order in which they are listed in the Action column until the problem is solved. See Chapter 5, "Parts listing, Types 7917 and 2584," on page 51 to determine which components are Tier 1 customer replaceable units (CRUs) and which components are Tier 2 customer replaceable units (CRUs).

Memory self-tests

Use this information to diagnose and solve memory self-test errors.

Follow the suggested actions in the order in which they are listed in the Action column until the problem is solved. See Chapter 5, "Parts listing, Types 7917 and 2584," on page 51 to determine which components are Tier 1 customer replaceable units (CRUs) and which components are Tier 2 customer replaceable units (CRUs).

Optical drive self-tests

Use this information to diagnose and solve optical drive self-test errors.

Follow the suggested actions in the order in which they are listed in the Action column until the problem is solved. See Chapter 5, "Parts listing, Types 7917 and 2584," on page 51 to determine which components are Tier 1 customer replaceable units (CRUs) and which components are Tier 2 customer replaceable units (CRUs).

Hard disk drive self-tests

Use this information to diagnose and resolve hard disk drive self-test errors.

Follow the suggested actions in the order in which they are listed in the Action column until the problem is solved. See Chapter 5, "Parts listing, Types 7917 and 2584," on page 51 to determine which components are Tier 1 customer replaceable units (CRUs) and which components are Tier 2 customer replaceable units (CRUs).

Troubleshooting by symptom

Use this information to find solutions to problems that have identifiable symptoms.

To use the symptom-based troubleshooting tables in this section, complete the following steps:

1. Check the IMM event log and follow the suggested actions to resolve any event codes (see "IMM event log" on page 63).
2. Find the symptoms that you are experiencing in the troubleshooting tables in this section and follow the suggested actions to resolve any problems.
3. If the problem remains, submit a service request (see http://ralfss21.raleigh.ibm.com:8099/help/topic/com.ibm.acc.common.nav.doc/getting_help_and_technical_assistance.html).

Compute node start problems

Use this information to solve compute node start problems.

Follow the suggested actions in the order in which they are listed in the Action column until the problem is solved.

Follow the suggested actions in the order in which they are listed in the Action column until the problem is solved. See Chapter 5, "Parts listing, Types 7917 and 2584," on page 51 to determine which components are Tier 1 customer replaceable units (CRUs) and which components are Tier 2 customer replaceable units (CRUs).

Symptom	Action
Embedded hypervisor is not in the boot list	1. If the compute node has recently been installed, moved, or serviced, or if this is the first time the embedded hypervisor is being used, make sure that the device is connected properly and that there is no physical damage to the connectors. 2. Go to http://www.ibm.com/systems/info/x86servers/serverproven/compat/us/ to validate that the embedded hypervisor device is supported for the compute node. 3. Use the Setup utility to make sure that the embedded hypervisor device (USB key) is in the startup sequence. From the Setup utility, select **Start Options**. 4. Check http://www.ibm.com for any service bulletins related to the embedded hypervisor and the compute node. 5. Make sure that other software works on the compute node to ensure that the compute node is working properly.

Connectivity problems

Use this information to solve connectivity problems.

The IBM Flex System Manager management node cannot communicate with a compute node

Use the information in this section to troubleshoot the IBM Flex System Managermanagement node when the management node cannot communicate with a compute node.

Action

Complete the following steps until the problem is solved:

1. Make sure that the protocols that you are using are enabled.

Note: By default, only secure protocols, such as, SSH and HTTPS, are enabled.

2. Use a serial cable to connect to the I/O module to further isolate the problem.

Cannot communicate with the CMM

Use the information in this section to troubleshoot the compute node when you cannot communicate with the CMM.

Action

Complete the following steps until the problem is solved:

1. Make sure that the protocols that you are using are enabled.

   Note: By default, only secure protocols, such as, SSH and HTTPS, are enabled.

2. Use a serial cable to connect to the I/O module to further isolate the problem.
3. Reset the CMM to the default settings by pressing the reset button on the CMM.

Cannot communicate with the I/O module

Use the information in this section to troubleshoot the compute node when you cannot communicate with the I/O module.

Action

Complete the following steps until the problem is solved:

1. Make sure that the protocols that you are using are enabled.

   Note: By default, only secure protocols, such as, SSH and HTTPS, are enabled.

2. Use a serial cable to connect to the I/O module to further isolate the problem.

One or more compute nodes are unable to communicate with SAN

Use the information in this section to troubleshoot one or more compute nodes are unable to communicate with SAN.

- Make sure that:
  1. The I/O module is powered on and the appropriate ports are enabled on the I/O module.
  2. The CMM has reported that the I/O module has completed POST and that no errors have been reported in the logs.
  3. The SAN device is powered on and is functional.
  4. All cables between the I/O module and the SAN device are properly connected and secure and that the activity LEDs are lit on the applicable ports.
- See the documentation for the I/O module for additional information about troubleshooting SAN connectivity or network connectivity issues.

Complete the following steps until the problem is solved:

Cannot connect during initial setup

Use the information in this section to troubleshoot the compute node when you cannot connect during initial setup.

One compute node is unable to connect during the initial setup:

Use the information in this section to troubleshoot one compute node that is unable to connect during the initial setup.

Complete the following steps until the problem is solved:

1. Make sure that:
   a. The I/O module is powered on and the applicable ports are enabled on the I/O module.
   b. All cables between the I/O module and the network device (switch or router) are properly connected and secure and that the activity LEDs are lit on the applicable ports.
2. From the compute node operating system, verify the network settings, such as IP address, subnet mask (if you are using IPv4), DHCP settings, and vLAN settings, to ensure that the settings match the settings of the network device. See the documentation for the operating system for information about checking network settings.
3. From the compute node operating system, make sure that the network device is active. See the documentation for the operating system for information about viewing network devices.
4. Check the IBM support website for any firmware updates that might apply to this issue. You can view the release notes for a firmware update to determine the issues that are addressed by the update.
5. Remove the compute node from the chassis and check the connectors at the back of the node for bent pins. If the pins are bent, contact IBM Support. See "Removing a compute node from a chassis" on page 489.
6. Install the compute node in another compute node bay to see whether the problem remains. See "Installing a compute node in a chassis" on page 490. If the problem persists, make sure that this compute node is connected to a port that has been enabled and that the vLAN settings enable that port to connect to the network.
7. Check the IBM support website for any service bulletins that are related to network connectivity.
8. (Trained service technician only) Complete the following steps:
   a. Force the link/duplex speed.
   b. Check the connectors on the I/O module to ensure that there are no bent pins.
   c. Check the connectors on the chassis midplane to ensure there are no bent pins. See the "IBM Flex System Enterprise Chassis Types 8721, 8724, and 8725: Installation and Service Guide" at http://ralfss21.raleigh.ibm.com:8099/help/topic/com.ibm.acc.8721.doc/product_page.html.
   d. Remove the I/O module and install a working I/O module in the same I/O bay.
   e. If the problem is solved, replace the I/O module that you removed.
   f. If the problem remains, replace the midplane.

One compute node experiences a sudden loss of connectivity:

Use the information in this section to troubleshoot one compute node that experiences a sudden loss of connectivity.

The event is logged in the event log. See the event log for the IBM Flex System Manager management node (if installed) or see the event log of the CMM to determine what actions might be required to resolve this issue. See “IMM event log” on page 63.

Two or more compute nodes are unable to communicate during initial setup:

Use the information in this section to troubleshoot two or more compute nodes that are unable to communicate during initial setup.

Complete the following steps until the problem is solved:

1. If you have just updated the firmware for one or more devices in the chassis (such as an I/O module or CMM), install the previous level of firmware.
2. Make sure that:
   a. The I/O module is powered on and the applicable ports are enabled on the I/O module.
   b. All cables between the I/O module and the network device (switch or router) are properly connected and secure and that the activity LEDs are lit on the applicable ports.
3. From the compute node operating system, verify the network settings, such as IP address, subnet mask (if you are using IPv4), DHCP settings, and vLAN settings, to ensure that the settings match the settings of the network device. See the documentation for the operating system for information about checking network settings.
4. From the compute node operating system, make sure that the network device is active. See the documentation for the operating system for information about viewing network devices.
5. Check the IBM support website for any firmware updates that might apply to this issue. You can view the release notes for a firmware update to determine the issues that are addressed by the update.
6. Check the IBM support website for any service bulletins that are related to network connectivity.
7. (Trained service technician only) Complete the following steps:
   a. Force the link/duplex speed.
   b. Check the connectors on the I/O module to ensure that there are no bent pins.
   c. Check the connectors on the chassis midplane to ensure there are no bent pins. See the "IBM Flex System Enterprise Chassis Types 8721, 8724, and 8725: Installation and Service Guide" at http://ralfss21.raleigh.ibm.com:8099/help/topic/com.ibm.acc.8721.doc/product_page.html.
   d. Remove the I/O module and install a working I/O module in the same I/O bay.
   e. If the problem is solved, replace the I/O module that you removed.
   f. If the problem persists, replace the midplane.

Two or more compute nodes experience a sudden loss of connectivity:

Use the information in this section to troubleshoot two or more compute nodes that experience a sudden loss of connectivity.

The event is logged in the event log. See the event log for the IBM Flex System Manager management node (if installed) or see the event log of the CMM to determine what actions might be required to resolve this issue. See "IMM event log" on page 63.

Cannot log in

Use the information in this section to troubleshoot the compute node when you cannot log in to the management node, the CMM, or the I/O module.

Cannot log in to the IBM Flex System Manager management node:

Use the information in this section to troubleshoot the compute node when you cannot log in to the management node.

Action

Complete the following steps until the problem is solved:

1. Make sure that you are using the correct password and that the capitals lock is off.
2. Contact IBM Support for further assistance if you have forgotten the password.

Cannot log in to the CMM:

Use the information in this section to troubleshoot the compute node when you cannot log in to the CMM.

Action

Complete the following steps until the problem is solved:

1. Make sure that you are using the correct password and that the capitals lock is off.
2. Restore the CMM default settings by pressing the reset button on the CMM.

Cannot log in to the I/O module:

Use the information in this section to troubleshoot the compute node when you cannot log in to the I/O module.

Action

Complete the following steps until the problem is solved:

1. Make sure that you are using the correct password and that the capitals lock is off.
2. Contact IBM Support for further assistance if you have forgotten the password.

Cannot ping the CMM on the management network

Use the information in this section to troubleshoot the compute node when one or more compute nodes cannot ping the CMM on the management network.

Single node cannot ping the CMM in the same chassis:

Use the information in this section to troubleshoot a single compute node that cannot ping the CMM on the management network in the same chassis.

Action

Complete the following steps until the problem is solved:

1. Make sure that the Chassis Management Module is powered on and the applicable ports are enabled on the CMM.
2. Make sure that the compute node IMM has acquired an IP address from the CMM by using the Setup utility on the node.

   Note: If the CMM recently lost connection to the DCHP server, you must reset the IMM by using the CMM interface so that a new IP address can be acquired.
3. In the CMM user interface, click **Chassis Management > Component IP Configuration** and make sure that the IP address that is listed is the same as the IP address that is displayed in the Setup utility. If it is not the same IP address, configure the IMM network settings correctly or reset the IMM to automatically acquire a new IP address.
4. Check http://www.ibm.com/supportportal/ for any firmware updates that might apply to this problem. You can view the release notes for a firmware update to determine the issues that the update addresses.
5. Remove the compute node from the chassis and check the connectors on the back of the node for bent pins. If the pins are bent, contact IBM Support.
6. Install the compute node in another node bay to determine whether the problem remains. If the problem remains, make sure that the compute node is connected to a port that has been enabled and that the vLAN settings allow that port to connect to the network.
7. Check http://www.ibm.com/supportportal/ for any service bulletins that are related to network connectivity.
8. (Trained service technician only) Complete the following steps:
   a. Force the link/duplex speed.
   b. Check the connectors on the I/O module to make sure that no pins are bent.
   c. Check the connectors on the chassis midplane to make sure that no pins are bent.
   d. Remove the CMM and install a working CMM in the same bay.
      - If the problem is solved, replace the CMM that you removed.
      - If the problem remains, replace the midplane.

Multiple nodes cannot ping the CMM in the same chassis:

Use the information in this section to troubleshoot multiple nodes that cannot ping the CMM on the management network in the same chassis.

Action

Complete the following steps until the problem is solved:

1. Make sure that the Chassis Management Module is powered on and the applicable ports are enabled on the CMM. If the CMM is hung, reset the CMM.
2. Reset the CMM.
3. Check for firmware updates for the CMM.
4. Reset the CMM to factory defaults and attempt to discover the nodes again. Allow enough time for the IMMs to acquire a network address.

5. Replace the CMM.
6. Make sure that the compute node IMM has acquired an IP address from the CMM by using the Setup utility on the node.

   Note: If the CMM recently lost connection to the DCHP server, you must reset the IMM by using the CMM interface so that a new IP address can be acquired.
7. In the CMM user interface, click **Chassis Management > Component IP Configuration** and make sure that the IP address that is listed is the same as the IP address that is displayed in the Setup utility. If it is not the same IP address, configure the IMM network settings correctly or reset the IMM to automatically acquire a new IP address.
8. Check http://www.ibm.com/supportportal/ for any firmware updates that might apply to this problem. You can view the release notes for a firmware update to determine the issues that the update addresses.
9. Remove the compute node from the chassis and check the connectors on the back of the node for bent pins. If the pins are bent, contact IBM Support.
10. Check http://www.ibm.com/supportportal/ for any service bulletins that are related to network connectivity.
11. (Trained service technician only) Complete the following steps:
    a. Force the link/duplex speed.
    b. Check the connectors on the CMM to make sure that no pins are bent.
    c. Check the connectors on the chassis midplane to make sure that no pins are bent.
    d. Remove the CMM and install a working CMM in the same bay.
       - If the problem is solved, replace the CMM that you removed.
       - If the problem remains, replace the midplane.

CMM cannot ping the CMM in a different chassis:

Use the information in this section to troubleshoot a CMM that cannot ping the CMM in a different chassis.

Action

Complete the following steps until the problem is solved:

1. Make sure that the Chassis Management Modules are powered on and the applicable ports are enabled.
   a. If the CMM is powered on and hung, reset the CMM.
   b. Make sure that the IMM, the management node, and the CMMs are all on the same subnet.
2. Verify that the cables between the CMMs and the top-of-rack switch are correctly connected and that the activity LEDs are lit on the applicable ports.
3. Make sure that the management node has a correct IP address and is on the same subnet as the CMMs.
4. Make sure that the compute node IMM has acquired an IP address from the CMM by using the Setup utility on the node.

   Note: If the CMM recently lost connection to the DCHP server, you must reset the IMM by using the CMM interface so that a new IP address can be acquired.

5. In the CMM user interface, click **Chassis Management > Component IP Configuration** and make sure that the IP address that is listed is the same as the IP address that is displayed in the Setup utility. If it is not the same IP address, configure the IMM network settings correctly or reset the IMM to automatically acquire a new IP address.
6. Check http://www.ibm.com/supportportal/ for any firmware updates that might apply to this problem. You can view the release notes for a firmware update to determine the issues that the update addresses.
7. Check http://www.ibm.com/supportportal/ for any service bulletins that are related to network connectivity.
8. Remove the compute node from the chassis and check the connectors on the back of the node and on the midplane for bent pins. If the pins are bent, contact IBM Support.
9. (Trained service technician only) Complete the following steps:
   a. Force the link/duplex speed.
   b. Check the connectors on the nodes and on the midplane to make sure that no pins are bent.
   c. Replace the I/O expansion card in the management node.
   d. Replace the management node system-board assembly.
   e. Replace the management node.

Cannot ping the I/O module

Use the information in this section to troubleshoot the compute node when one or more compute nodes cannot ping the I/O module.

Single node cannot ping the I/O module:

Use the information in this section to troubleshoot a single compute node that cannot ping the I/O module.

Action

Complete the following steps until the problem is solved:

1. If you have recently updated the firmware for one or more devices in the chassis (I/O module) and have verified the network settings, install the previous level of firmware.
2. Make sure that the I/O module is powered on and the applicable ports are enabled on the I/O module.
3. Make sure that all network cables are correctly connected and that the activity LEDs are lit. If the cables are correctly connected and the LEDs are not lit, replace the cable.
4. Check http://www.ibm.com/supportportal/ for any firmware updates that might apply to this problem. You can view the release notes for a firmware update to determine the issues that are addressed by the update.
5. Remove the node from the chassis and check the connectors at the back of the node for bent pins. If the pins are bent, go to http://www.ibm.com/supportportal/ to submit a service request.
6. Install the compute node in another node bay, if one is available. If the problem remains, make sure that the compute node is connected to a port that has been enabled and that the vLAN settings allow that port to connect to the network.
7. Check http://www.ibm.com/supportportal/ for any service bulletins that are related to I/O-module connectivity.

8. If the problem remains, replace the I/O module, and go to http://www.ibm.com/supportportal/ to submit a service request.
9. (Trained service technician only) Complete the following steps:
   a. Force the link/duplex speed.
   b. Check the connectors on the I/O module to make sure that no pins are bent.
   c. Check the connectors on the chassis midplane to make sure that no pins are bent.
   d. Remove the I/O module and install a working I/O module in the same I/O bay.
      - If the problem is solved, replace the I/O module that you removed.
      - If the problem remains, replace the midplane.

Multiple nodes cannot ping the I/O module:

Use the information in this section to troubleshoot multiple nodes that cannot ping the I/O module.

Action

Complete the following steps until the problem is solved:

1. If you have recently updated the firmware for one or more devices in the chassis (I/O module or CMM), install the previous level of firmware.
2. Make sure that the I/O module is powered on and the applicable ports are enabled on the I/O module.
3. Make sure that all network cables are correctly connected and that the activity LEDs are lit.
4. From the compute node operating system, verify that the network device is active. Check also the network settings, such as IP address, subnet mask (if you are using IPv4), DNS, DHCP settings, and vLAN settings to make sure that the settings match the settings of the network device. See the documentation that comes with the operating system for information about viewing network devices and checking the network settings.
5. Check http://www.ibm.com/supportportal/ for any firmware updates that might apply to this problem. You can view the release notes for a firmware update to determine the issues that are addressed by the update.
6. Check http://www.ibm.com/supportportal/ for any service bulletins that are related to network connectivity.
7. (Trained service technician only) Complete the following steps:
   a. Force the link/duplex speed.
   b. Check the connectors on the I/O module to make sure that no pins are bent.
   c. Check the connectors on the chassis midplane to make sure that no pins are bent.
   d. Remove the I/O module and install a working I/O module in the same I/O bay.
      - If the problem is solved, replace the I/O module that you removed.
      - If the problem remains, replace the midplane.

Cannot ping the IBM Flex System Manager management node on the data network

Use the information in this section to troubleshoot the compute node when one or more compute nodes cannot ping the management node on the data network.

Single node cannot ping the management node in the same chassis:

Use the information in this section to troubleshoot a single compute node that cannot ping the IBM Flex System Manager management node in the same chassis on the data network.

Action

Complete the following steps until the problem is solved:

1. Make sure that the management node is powered on and is not hung, by logging in to the management node. If you are unable to log in from the management network, attempt to log in from the data network. If the management node is powered on and hung, perform a virtual reseat of the management node from the CMM.
2. Make sure that the I/O module is powered on and is not hung, by pinging the I/O module from the management node. If the I/O module is powered on and hung, reset the I/O module. Make sure that the correct ports are enabled for the node on the I/O module.
3. Make sure that the compute node is the only one in the chassis that the management node cannot ping. If it is not, follow the steps in "Multiple nodes cannot ping the management node in the same chassis" on page 469.
4. Make sure that the configuration settings in the node are correct and that the port is enabled.
5. Check http://www.ibm.com/supportportal/ for any firmware updates that might apply to this issue. You can view the release notes for a firmware update to determine the issues that are addressed by the update.
6. Check http://www.ibm.com/supportportal/ for any service bulletins that are related to network connectivity.
7. Remove the compute node and make sure that the connectors on the midplane and the node are not damaged.
8. (Trained service technician only) Complete the following steps:
   a. Force the link/duplex speed.
   b. Check the connectors on the node and the midplane to make sure that no pins are bent.
   c. Replace the system board in the compute node.

Single node cannot ping the management node in a different chassis:

Use the information in this section to troubleshoot a single compute node that cannot ping the IBM Flex System Manager management node in a different chassis on the data network.

Action

Complete the following steps until the problem is solved:

1. Make sure that the management node is powered on and is not hung, by logging in to the management node. If you are unable to log in from the

management network, attempt to log in from the data network. If the management node is powered on and hung, perform a virtual reseat of the management node from the CMM.

2. Make sure that the I/O module is powered on and is not hung, by pinging the I/O module from the management node. If the I/O module is powered on and hung, reset the I/O module. Make sure that the correct ports are enabled for the node on the I/O module.
3. Make sure that the compute node is the only one in the chassis that the management node cannot ping. If it is not, follow the steps in "Multiple nodes cannot ping the management node in the same chassis."
4. Make sure that the IP configuration settings on the node are correct and that the port is enabled.
5. Check http://www.ibm.com/supportportal/ for any firmware updates that might apply to this issue. You can view the release notes for a firmware update to determine the issues that are addressed by the update.
6. Check http://www.ibm.com/supportportal/ for any service bulletins that are related to network connectivity.
7. Remove the compute node and make sure that the connectors on the midplane and the node are not damaged.
8. (Trained service technician only) Complete the following steps:
   a. Force the link/duplex speed.
   b. Check the connectors on the node and the midplane to make sure that no pins are bent.
   c. Replace the system board in the compute node.

Multiple nodes cannot ping the management node in the same chassis:

Use the information in this section to troubleshoot multiple nodes that cannot ping the IBM Flex System Manager management node in the same chassis on the data network.

Action

Complete the following steps until the problem is solved:

1. Make sure that the management node is powered on and is not hung, by logging in to the management node. If you are unable to log in from the management network, attempt to log in from the data network. If the management node is powered on and hung, perform a virtual reseat of the management node from the CMM.
2. Make sure that the I/O module is powered on and is not hung, by pinging the I/O module from the management node. If the I/O module is powered on and hung, reset the I/O module. Make sure that the correct ports are enabled for the node on the I/O module.
3. Make sure that the management network port (eth1) is enabled in the management node. Make sure that the port configuration settings are correct for the data network.
4. Make sure that the configuration settings for each node are correct and that the data network ports are enabled.
5. Make sure that the configuration settings in the I/O module are correct and that the applicable ports are enabled for your compute nodes and the management node on the I/O module. If the problem remains, complete the following steps:

   a. Restart the I/O module.
   b. Check http://www.ibm.com/supportportal/ for any firmware updates that might apply to this issue. You can view the release notes for a firmware update to determine the issues that are addressed by the update.
   c. Perform a virtual reseat of the I/O module.
   d. Replace the I/O module.
6. Check http://www.ibm.com/supportportal/ for any service bulletins that are related to network connectivity.
7. Remove the management node and make sure that the connectors on the midplane and the management node are not damaged.
8. (Trained service technician only) Complete the following steps:
   a. Force the link/duplex speed.
   b. Check the connectors on the nodes and the midplane to make sure that no pins are bent.
   c. Replace the I/O expansion card in the management node.
   d. Replace the system-board assembly in the management node.

Multiple nodes cannot ping the management node in a different chassis:

Use the information in this section to troubleshoot multiple nodes that cannot ping the IBM Flex System Manager management node in a different chassis on the data network.

Action

Complete the following steps until the problem is solved:

1. Make sure that the management node is powered on and is not hung, by logging in to the management node. If you are unable to log in from the management network, attempt to log in from the data network. If the management node is powered on and hung, perform a virtual reseat of the management node from the CMM.
2. Make sure that the I/O module is powered on and is not hung, by pinging the I/O module from the management node. If the I/O module is powered on and hung, reset the I/O module. Make sure that the correct ports are enabled for the node on the I/O module.
3. Make sure that the management network port (eth1) in the management node is enabled. Make sure that the port configuration settings are correct for the data network.
4. Make sure that the configuration settings for each node are correct and that the data network ports are enabled.
5. Make sure that the configuration settings in the I/O module are correct and that the applicable ports are enabled for your compute nodes and the management node on the I/O module. If the problem remains, complete the following steps:
   a. Restart the I/O module.
   b. Check http://www.ibm.com/supportportal/ for any firmware updates that might apply to this issue. You can view the release notes for a firmware update to determine the issues that are addressed by the update.
   c. Perform a virtual reseat of the I/O module.
   d. Replace the I/O module.

6. Check http://www.ibm.com/supportportal/ for any service bulletins that are related to network connectivity.
7. Remove the management node and make sure that the connectors on the midplane and the node are not damaged.
8. (Trained service technician only) Complete the following steps:
   a. Force the link/duplex speed.
   b. Check the connectors on the nodes and the midplane to make sure that no pins are bent.
   c. Replace the I/O expansion card in the management node.
   d. Replace the system-board assembly in the management node.

Multiple nodes cannot ping the management node in the same chassis or a different chassis:

Use the information in this section to troubleshoot multiple nodes that cannot ping the IBM Flex System Manager management node in the same chassis or a different chassis on the data network.

Action

Complete the following steps until the problem is solved:

1. Follow the steps in "Multiple nodes cannot ping the management node in the same chassis" on page 469.
2. Follow the steps in "Multiple nodes cannot ping the management node in a different chassis" on page 470.

Cannot ping the IBM Flex System Manager management node on the management network

Use the information in this section to troubleshoot the compute node when one or more compute nodes cannot ping the management node on the management network.

Single node cannot ping the management node in the same chassis:

Use the information in this section to troubleshoot a single compute node that cannot ping the IBM Flex System Manager management node in the same chassis on the management network.

Action

Complete the following steps until the problem is solved:

1. Make sure that the management node is powered on and is not hung, by logging in to the management node. If you are unable to log in from the management network, attempt to log in from the data network. If the management node is powered on and hung, perform a virtual reseat of the management node from the CMM.
2. Make sure that the CMM is powered on and is not hung, by pinging the CMM from the management node. If the CMM is powered on and hung, reset the CMM. Make sure that the IMM, the management node, and CMM are all on the same subnet.
3. Make sure that the compute node is the only one in the chassis that the management node cannot ping. If it is not, follow the steps in "Multiple nodes cannot ping the management node in the same chassis" on page 473. Make

sure that the compute node appears on the chassis map (it might not be fully discovered by the management node software).

4. Make sure that the system-management processor in each compute node has a valid IP address by checking the chassis map of the remote chassis.

   Note: If the CMM recently lost connection to the DCHP server, you must reset the IMM by using the CMM interface so that a new IP address can be acquired.

5. In the CMM user interface, click **Chassis Management > Component IP Configuration** and make sure that the IP address that is listed is the same as the IP address that is displayed in the Setup utility. If it is not the same, configure the IMM network settings correctly.
6. Check http://www.ibm.com/supportportal/ for any firmware updates that might apply to this issue. You can view the release notes for a firmware update to determine the issues that are addressed by the update.
7. Check http://www.ibm.com/supportportal/ for any service bulletins that are related to network connectivity.
8. Remove the compute node and make sure that the connectors on the midplane and the node are not damaged.
9. (Trained service technician only) Complete the following steps:
   a. Force the link/duplex speed.
   b. Check the connectors on the node and the midplane to make sure that no pins are bent.
   c. Replace the compute node.

Single node cannot ping the management node in a different chassis:

Use the information in this section to troubleshoot a single compute node that cannot ping the IBM Flex System Manager management node in a different chassis on the management network.

Action

Complete the following steps until the problem is solved:

1. Make sure that the management node is powered on and is not hung, by logging in to the management node. If you are unable to log in from the management network, attempt to log in from the data network. If the management node is powered on and hung, perform a virtual reseat of the management node from the CMM.
2. Make sure that the CMM is powered on and is not hung, by pinging the CMM from the management node:
   a. If the CMM is powered on and hung, reset the CMM
   b. Make sure that the IMM, the management node, and CMM are all on the same subnet.
3. Make sure that the compute node is the only one in the chassis that the management node cannot ping. If it is not, follow the steps in "Multiple nodes cannot ping the management node in the same chassis" on page 473. Make sure that the compute node appears on the chassis map (it might not be fully discovered by the management node software).
4. Make sure that the IMM has acquired an IP address from the CMM by using the Setup utility on the compute node.

Note: If the CMM recently lost connection to the DCHP server, you must reset the IMM by using the CMM interface so that a new IP address can be acquired.

5. Make sure that the system-management processor in each compute node has a valid IP address by checking the chassis map of the remote chassis.

   Note: If the CMM recently lost connection to the DCHP server, you must reset the IMM by using the CMM interface so that a new IP address can be acquired.
6. Check http://www.ibm.com/supportportal/ for any firmware updates that might apply to this issue. You can view the release notes for a firmware update to determine the issues that are addressed by the update.
7. Check http://www.ibm.com/supportportal/ for any service bulletins that are related to network connectivity.
8. Remove the compute node and make sure that the connectors on the midplane and the node are not damaged.
9. (Trained service technician only) Complete the following steps:
   a. Check the connectors on the node and the midplane to make sure that no pins are bent.
   b. Replace the system board in the compute node.

Multiple nodes cannot ping the management node in the same chassis:

Use the information in this section to troubleshoot multiple nodes that cannot ping the IBM Flex System Manager management node in the same chassis on the management network.

Action

Complete the following steps until the problem is solved:

1. Make sure that the management node is powered on and is not hung, by logging in to the management node. If you are unable to log in from the management network, attempt to log in from the data network. If the management node is powered on and hung, perform a virtual reseat of the management node from the CMM.
2. Make sure that the CMM is powered on and is not hung, by pinging the CMM from the management node:
   a. If the CMM is powered on and hung, reset the CMM.
   b. Make sure that the IMM, the management node, and CMM are all on the same subnet.
3. Make sure that the management network port (eth0) in the management node is enabled.
4. Make sure that the management node has an IP address, is on the same subnet as the CMM, and is able to ping the CMM.
5. Make sure that the system-management processor in each compute node has a valid IP address by checking the chassis map of the remote chassis.

   Note: If the CMM recently lost connection to the DCHP server, you must reset the IMM by using the CMM interface so that a new IP address can be acquired. If a system-management processor does not have a valid IP address, complete the following steps:
   a. Restart the CMM.

   b. Check http://www.ibm.com/supportportal/ for any firmware or software updates that might apply to this issue. You can view the release notes for a firmware update to determine the issues that are addressed by the update.
   c. Remove and reinstall the CMM.
   d. Replace the CMM.
6. Check http://www.ibm.com/supportportal/ for any service bulletins that are related to network connectivity.
7. Remove the management node and make sure that the connectors on the midplane and the management node are not damaged.
8. (Trained service technician only) Complete the following steps:
   a. Force the link/duplex speed.
   b. Check the connectors on the nodes and the midplane to make sure that no pins are bent.
   c. Replace the I/O expansion card in the management node.
   d. Replace the system-board assembly in the management node .
   e. Replace the management node.

Multiple nodes cannot ping the management node in a different chassis:

Use the information in this section to troubleshoot multiple nodes that cannot ping the IBM Flex System Manager management node in a different chassis on the management network.

Action

Complete the following steps until the problem is solved:

1. Make sure that the management node is powered on and is not hung, by logging in to the management node. If you are unable to log in from the management network, attempt to log in from the data network. If the management node is powered on and hung, perform a virtual reseat of the management node from the CMM.
2. Make sure that the CMM is powered on and is not hung by pinging the CMM from the management node:
   a. If the CMM is powered on and hung, reset the CMM.
   b. Make sure that the IMM, the management node, and the CMM are all on the same subnet.
3. Make sure that all cables between the CMMs and the top-of-rack switch are correctly connected and secure and that the activity LEDs are lit on the applicable ports.
4. Make sure that the CMMs (the CMM in the same chassis as the management node and the CMM in the remote chassis) have the same subnet address and can ping one another. If they cannot, make sure that the ports on the top-of-rack switch are enabled. Attempt to connect the CMMs directly if possible.
5. Make sure that the management node has fully discovered the nodes within its chassis by viewing the chassis map. If it has not fully discovered the nodes, follow the steps in "Multiple nodes cannot ping the management node in the same chassis" on page 473.
6. Make sure that the management processor for each compute node has a valid IP address by checking the chassis map of the remote chassis.

Note: If the CMM recently lost connection to the DCHP server, you must reset the IMM by using the CMM interface so that a new IP address can be acquired. If a system-management processor does not have a valid IP address, complete the following steps:

a. Restart the CMM in the remote chassis.
b. Check http://www.ibm.com/supportportal/ for any firmware or software updates that might apply to this issue. You can view the release notes for a firmware update to determine the issues that are addressed by the update.
c. Remove and reinstall the CMM.
d. Replace the CMM.

7. Check http://www.ibm.com/supportportal/ for any service bulletins that are related to network connectivity.
8. Remove the node and make sure that the connectors on the midplane and the node are not damaged.
9. (Trained service technician only) Complete the following steps:
   a. Force the link/duplex speed.
   b. Check the connectors on the nodes and the midplane to make sure that no pins are bent.
   c. Replace the I/O expansion card in the management node.
   d. Replace the system-board assembly in the management node.

Multiple nodes cannot ping the management node in the same chassis or a different chassis:

Use the information in this section to troubleshoot multiple nodes that cannot ping the IBM Flex System Manager management node in the same chassis or a different chassis on the management network.

Action

Complete the following steps until the problem is solved:

1. Follow the steps in "Multiple nodes cannot ping the management node in the same chassis" on page 473.
2. Follow the steps in "Multiple nodes cannot ping the management node in a different chassis" on page 474.

Hard disk drive problems

Use this information to resolve hard disk drive problems.

Follow the suggested actions in the order in which they are listed in the Action column until the problem is solved.

• **Follow the suggested actions in the order in which they are listed in the Action column until the problem is solved.** • **See Chapter 5, "Parts listing, Types 7917 and 2584," on page 51 to determine which components are customer replaceable units (CRU) and which components are field replaceable units (FRU) that must be replaced only by a trained service technician.** • **If an action step is preceded by "(Trained service technician only)," that step must be performed only by a trained service technician.**	
Symptom	**Action**
Compute node fails to recognize one drive	1. Verify that the drive is supported for this compute node. Go to http://www.ibm.com/systems/info/x86servers/serverproven/compat/us/ to see a list of supported hard disk drives. 2. Make sure that the drive is seated in the drive bay properly and that there is no physical damage to the drive connectors. 3. Replace the drive (see "Removing a hot-swap hard disk drive" on page 522 and "Installing a hot-swap hard disk drive" on page 523). 4. If the drive is still not recognized, replace the hard disk drive backplane (see "Removing the hard disk drive backplane" on page 519and "Installing the hard disk drive backplane" on page 521). 5. If the problem remains, replace the system board (see "Removing the base assembly" on page 529 and "Installing the base assembly" on page 531).

Intermittent problems

Use this information to solve intermittent problems.

Follow the suggested actions in the order in which they are listed in the Action column until the problem is solved.

• **Follow the suggested actions in the order in which they are listed in the Action column until the problem is solved.** • **See Chapter 5, "Parts listing, Types 7917 and 2584," on page 51 to determine which components are customer replaceable units (CRU) and which components are field replaceable units (FRU) that must be replaced only by a trained service technician.** • **If an action step is preceded by "(Trained service technician only)," that step must be performed only by a trained service technician.**	
Symptom	**Action**
Intermittent external device problems	1. Make sure that the correct device drivers are installed. See the manufacturer's website for documentation. 2. For a USB device: a. Make sure that the device is configured correctly (see "Using the Setup utility" on page 26). b. Connect the device to another port. If you are using a USB hub, remove the hub and connect the device directly to the compute node. Make sure that the device is configured correctly for the port (see "Using the Setup utility" on page 26). c. Run DSA Preboot USB diagnostics.

• **Follow the suggested actions in the order in which they are listed in the Action column until the problem is solved.** • **See Chapter 5, "Parts listing, Types 7917 and 2584," on page 51 to determine which components are customer replaceable units (CRU) and which components are field replaceable units (FRU) that must be replaced only by a trained service technician.** • **If an action step is preceded by "(Trained service technician only)," that step must be performed only by a trained service technician.**	
Symptom	**Action**
Intermittent KVM problems	Video problems: 1. Make sure that all cables and the console breakout cable are properly connected and secure. 2. Make sure that the monitor is working properly by testing it on another compute node. 3. Test the console breakout cable on a working compute node to ensure that it is operating properly. Replace the console breakout cable if it is defective. Keyboard problems: Make sure that all cables and the console breakout cable are properly connected and secure. Mouse problems: Make sure that all cables and the console breakout cable are properly connected and secure.
Intermittent unexpected reboots	Check for an event code that indicates a reboot. See the event log for the IBM Flex System Manager management software (if installed) or see the CMM event log to determine what actions might be required to resolve this issue. See "IMM event log" on page 63. Some correctable errors require that the compute node reboot so that it can disable a device, such as a DIMM or a microprocessor, to allow the compute node to boot properly.

Intermittent connectivity problems

Use this information to solve intermittent connectivity problems.

Follow the suggested actions in the order in which they are listed in the Action column until the problem is solved.

• **Follow the suggested actions in the order in which they are listed in the Action column until the problem is solved.** • **See Chapter 5, "Parts listing, Types 7917 and 2584," on page 51 to determine which components are customer replaceable units (CRU) and which components are field replaceable units (FRU) that must be replaced only by a trained service technician.** • **If an action step is preceded by "(Trained service technician only)," that step must be performed only by a trained service technician.**	
Symptom	**Action**
Single compute node cannot connect intermittently	1. Make sure that the network cables are correctly connected in the switch module ports and the switch module is correctly seated. 2. Update the NIC device driver or the storage device controller device driver. 3. See the documentation for the I/O module for resolving connectivity issues.

• **Follow the suggested actions in the order in which they are listed in the Action column until the problem is solved.** • **See Chapter 5, "Parts listing, Types 7917 and 2584," on page 51 to determine which components are customer replaceable units (CRU) and which components are field replaceable units (FRU) that must be replaced only by a trained service technician.** • **If an action step is preceded by "(Trained service technician only)," that step must be performed only by a trained service technician.**	
Symptom	**Action**
Two or more compute nodes cannot connect intermittently	1. Using the diagnostic tools that are provided by the device manufacturer, test the I/O module that the devices are connected to. 2. Attempt to connect one compute node to the network first, and connect other compute nodes, one by one, to try to isolate the problem. 3. Update the I/O module firmware, if necessary. **Note:** Restarting the compute node and running POST diagnostics on the I/O module might also help isolate the problem; however, this might have other ramifications to the network.
Compute nodes are not discovered by the IBM Flex System Manager management node or the CMM intermittently	1. Make sure that the compute node is recognized by the IBM Flex System Manager management node or the CMM. It might appear as an unknown device in the chassis map. If it is not recognized, complete the following steps. a. Remove the compute node and inspect both the compute node and the back of the compute node bay to ensure that there is no physical damage to connectors. b. Move the compute node to another node bay. c. Replace the compute node. 2. Make sure that the IBM Flex System Manager management node or the CMM can ping the compute nodes. If they cannot, see "Cannot ping the IBM Flex System Manager management node on the management network" on page 471. 3. If the compute nodes are in another chassis, make sure that you have the proper software entitlements to manage that chassis with the IBM Flex System Manager management node. 4. Check http://www.ibm.com/supportportal/ for any firmware updates that might apply to this issue. You can view the release notes for a firmware update to determine the issues that are addressed by the update. 5. Check http://www.ibm.com/supportportal/ for any service bulletins that are related to network connectivity.

Memory problems

Use this information to solve memory problems.

Follow the suggested actions in the order in which they are listed in the Action column until the problem is solved.

• **Follow the suggested actions in the order in which they are listed in the Action column until the problem is solved.** • **See Chapter 5, "Parts listing, Types 7917 and 2584," on page 51 to determine which components are customer replaceable units (CRU) and which components are field replaceable units (FRU) that must be replaced only by a trained service technician.** • **If an action step is preceded by "(Trained service technician only)," that step must be performed only by a trained service technician.**	
Symptom	**Action**
The amount of system memory that is displayed is less than the amount of installed physical memory.	1. Make sure that: a. You have installed the correct type of memory (see "Installing a DIMM" on page 502). b. Memory mirroring or memory sparing mode does not account for the discrepancy. You can check the memory configuration in the Setup utility (see "Using the Setup utility" on page 26). 2. If new memory has recently been installed, make sure that no configuration events are reported in the event log. If there are any events, resolve them. 3. If the compute node was recently installed, moved, or serviced, make sure that the DIMMs are correctly seated in the connectors (see "Installing a DIMM" on page 502). 4. Make sure that all DIMMs are enabled. The compute node might have automatically disabled a DIMM when it detected a problem, or a DIMM might have been manually disabled (see "Using the Setup utility" on page 26). 5. Run memory diagnostics (see "IBM Dynamic System Analysis Preboot diagnostic program" on page 65). 6. Remove DIMMs until the compute node is showing the correct amount of memory. Install one DIMM at a time until you can determine the DIMM that is not working properly. Remove that DIMM and replace it with a good DIMM (see "Removing a DIMM" on page 501, and "Installing a DIMM" on page 502). **Note:** After you install or remove a DIMM, you must change and save the new configuration information by using the Setup utility. When you turn on the compute node, a message indicates that the memory configuration has changed. Start the Setup utility and select **Save Settings** (see "Using the Setup utility" on page 26 for more information) to save changes. 7. Contact IBM Support.

Observable problems

Use this information to solve observable problems.

Follow the suggested actions in the order in which they are listed in the Action column until the problem is solved.

- **Follow the suggested actions in the order in which they are listed in the Action column until the problem is solved.**
- **See Chapter 5, "Parts listing, Types 7917 and 2584," on page 51 to determine which components are customer replaceable units (CRU) and which components are field replaceable units (FRU) that must be replaced only by a trained service technician.**
- **If an action step is preceded by "(Trained service technician only)," that step must be performed only by a trained service technician.**

Symptom	Action
Compute node is unresponsive (POST is complete and operating system is running)	If you are in the same location as the compute node, complete the following steps: 1. If you are using a KVM connection, make sure that the connection is operating correctly. Otherwise, make sure that the keyboard and mouse are operating correctly. 2. If possible, log in to the compute node and verify that all applications are running (no applications are hung). 3. Restart the compute node. 4. Make sure that any new software has been installed and configured correctly. 5. Contact your place of purchase of the software or your software provider. If you are accessing the compute node from a remote location, complete the following steps: 1. Make sure that all applications are running (no applications are hung). 2. Attempt to log out of the system and log back in. 3. Validate the network access by pinging or running a trace route to the compute node from a command line: a. If you are unable to get a response during a ping test, attempt to ping another compute node in the chassis to determine whether it is a connection problem or compute node problem. b. Run a trace route to determine where the connection breaks down. Attempt to resolve a connection issue with either the VPN or the point at which the connection breaks down. 4. Restart the compute node remotely through the management interface. 5. If the problem remains, verify that any new software has been installed and configured correctly. 6. Contact your place of purchase of the software or your software provider.
Unusual smell	An unusual smell might be coming from newly installed equipment. If the problem remains, contact IBM Support.
Compute node seems to be running hot	Multiple compute nodes or chassis: 1. Make sure that the room temperature is within the specified range (see "Features and specifications" on page 4). 2. Check the IBM Flex System Manager management software or CMM event log for rising temperature events. If there are no events, the compute node is running within normal operating temperatures. Note that you can expect some variation in temperature. Single compute node: Check the IBM Flex System Manager management software or CMM event log for rising temperature events. If there are no events, the compute node is running within normal operating temperatures. Note that you can expect some variation in temperature.
Cracked parts or cracked chassis	Contact IBM Support.

Optional device and FRU installation problems

Use this information to resolve optional device and FRU installation problems.

Follow the suggested actions in the order in which they are listed in the Action column until the problem is solved.

- **Follow the suggested actions in the order in which they are listed in the Action column until the problem is solved.**
- **See Chapter 5, "Parts listing, Types 7917 and 2584," on page 51 to determine which components are customer replaceable units (CRU) and which components are field replaceable units (FRU) that must be replaced only by a trained service technician.**
- **If an action step is preceded by "(Trained service technician only)," that step must be performed only by a trained service technician.**

Symptom	Action
External USB device not recognized	1. Make sure that the correct device drivers are installed on the compute node. See the product documentation for the USB device for information about device drivers. 2. Use the Setup utility to make sure that the device is configured correctly. 3. If the USB device is connected to a hub or the console breakout cable, disconnect the device and connect it directly into the USB port on the front of the compute node. 4. Run the DSA USB diagnostic tests.
PCIe adapters not recognized/functioning	1. Check the event log and resolve any issues related to the device. 2. See http://www.ibm.com/systems/info/x86servers/serverproven/compat/us/ to validate that the adapter is supported. 3. Make sure that the adapter is installed in a correct slot. 4. Make sure that the correct device drivers are installed for the device. 5. Resolve any resource conflicts if running legacy mode (UEFI). 6. Check http://www.ibm.com/supportportal for any service bulletins. 7. Make sure that any adapter external connections are correct and that the connectors are not physically damaged.

Performance problems

Use this information to solve performance problems.

Follow the suggested actions in the order in which they are listed in the Action column until the problem is solved.

• **Follow the suggested actions in the order in which they are listed in the Action column until the problem is solved.** • **See Chapter 5, "Parts listing, Types 7917 and 2584," on page 51 to determine which components are customer replaceable units (CRU) and which components are field replaceable units (FRU) that must be replaced only by a trained service technician.** • **If an action step is preceded by "(Trained service technician only)," that step must be performed only by a trained service technician.**	
Symptom	**Action**
Poor or slow network performance	1. Isolate which network is operating slowly (such as storage, data, or management). You might find it helpful to use ping tools or operating-system tools such as task manager or resource manager. 2. Check for traffic congestion on the network. 3. Update the NIC device driver or the storage device controller device driver. 4. Use the traffic-diagnostic tools that are provided by the I/O module manufacturer.
Operating-system performance	1. If you have recently made changes to the compute node (for example, updated device drivers or installed software applications) remove the changes. 2. Check for any networking issues. 3. Check the operating-system logs for performance-related errors. 4. Check for events related to high temperatures and power issues, because the compute node might be throttled to help with cooling. If it is throttled, reduce the workload on the compute node to help improve performance. 5. Check for events related to disabled DIMMs. If you do not have enough memory for the application workload, your operating system will have poor performance. 6. Ensure that the workload is not too high for the configuration.

Power-on problems

Use this information to resolve power-on problems.

Follow the suggested actions in the order in which they are listed in the Action column until the problem is solved.

• **Follow the suggested actions in the order in which they are listed in the Action column until the problem is solved.** • **See Chapter 5, "Parts listing, Types 7917 and 2584," on page 51 to determine which components are customer replaceable units (CRU) and which components are field replaceable units (FRU) that must be replaced only by a trained service technician.** • **If an action step is preceded by "(Trained service technician only)," that step must be performed only by a trained service technician.**	
Symptom	**Action**
Single node does not power on	1. Check the event logs for any events that are related to the compute node, and solve them. If an IBM Flex System Manager management node is installed, check the event log on the management node. Otherwise, the Chassis Management Module event log. 2. Make sure that the CMM can recognize the compute node. Log in to the CMM user interface and verify that the compute node appears in the chassis view. If the CMM cannot recognize the compute node, remove the compute node and inspect the compute node and the back of the node bay to make sure that there is no physical damage to the connectors. 3. Make sure that the power policy that is implemented on the CMM is sufficient to enable the compute node to power on. You can view the power policy from the CMM user interface (click **Power Management** > **Power Modules and Management**). 4. Make sure that the IBM Flex System Manager management node has completed the discovery of the compute node. Log in to the IBM Flex System Manager user interface and verify that the compute node appears in the chassis view from the CMM. 5. Replace the compute node. **Note:** Until you are able to replace the compute node, you can attempt to power on the compute node from the CMM or from the IBM Flex System Manager user interface.
Multiple nodes do not power on	Check the event logs for any events that are related to the compute nodes, and solve them. If an IBM Flex System Manager management node is installed, check the event log on the management node. Otherwise, check the Chassis Management Module event log.
Compute node does not power off	1. Attempt to power off the compute node through the IBM Flex System Manager user interface, if an IBM Flex System Manager management node is installed. Otherwise, attempt to power off the compute node through the CMM user interface. 2. Attempt to restart the system-management processor for the compute node. You can restart the system-management processor through the CMM user interface. Click the compute node in the chassis view and then click **Restart System Mgmt Processor**. After the system-management processor has been restarted, attempt to power off the compute node from the CMM. 3. Attempt to power off the compute node by using the power button on the front of the node. 4. Attempt to reset the compute node from the CMM command-line interface (CLI) by using the **`reset`** command. 5. Reseat the CMM; then, perform steps 1-4 again.

Software problems

Use this information to solve software problems.

Complete the following steps until the problem is solved:

1. To determine whether the problem is caused by the software, make sure that:

- The compute node has the minimum memory that is needed to use the software. For memory requirements, see the information that comes with the software.

  Note: If you have just installed an adapter or memory, the compute node might have a memory-address conflict.
- The software is designed to operate on the compute node.
- Other software works on the compute node.
- The software works on another compute node.

2. If you receive any error messages while you use the software, see the information that comes with the software for a description of the messages and suggested solutions to the problem.
3. Contact your place of purchase of the software.

Solving undetermined problems

Use this information to solve undetermined problems.

About this task

Note: When you are diagnosing a problem in the compute node, you must determine whether the problem is in the compute node or in the IBM Flex System chassis.

- If all of the compute nodes have the same symptom, the problem is probably in the IBM Flex System chassis. For more information, see the documentation for your IBM Flex System chassis.
- If the IBM Flex System chassis contains more than one compute node and only one of the compute nodes has the problem, troubleshoot the compute node that has the problem.

If DSA did not diagnose the failure or if the compute node is inoperative, use the information in this section.

If you suspect that a software problem is causing failures (continuous or intermittent), see “Software problems” on page 483.

Corrupted data in CMOS memory or corrupted UEFI code can cause undetermined problems. To reset the CMOS data, remove and replace the CMOS battery to override the power-on password and clear the CMOS memory; see “Removing the CMOS battery” on page 496. If you suspect that the UEFI code is corrupted, see “Recovering a UEFI image” on page 24.

Check the LEDs on all the power supplies of the IBM Flex System chassis in which the compute node is installed. If the LEDs indicate that the power supplies are working correctly and reseating the compute node does not correct the problem, complete the following steps:

1. If no LEDs on the control panel are working, try to turn on the compute node from the Chassis Management Module (see the documentation for the IBM Flex System chassis and Chassis Management Module for more information).
2. Turn off the compute node.
3. Remove the compute node from the IBM Flex System chassis and remove the cover.
4. Remove or disconnect the following devices, one at a time, until you find the failure. Reinstall, turn on, and reconfigure the compute node each time.
   - I/O expansion adapter.

- Hard disk drives.
- DIMMs. The minimum configuration requirement is 4 GB (one 4 GB DIMM on the system board).

The following minimum configuration is required for the compute node to start:
- System board
- One microprocessor
- One 4 GB DIMM
- A functioning IBM Flex System chassis

5. Install and turn on the compute node. If the problem remains, suspect the following components in the following order:
   a. DIMM
   b. System board
   c. Microprocessor

If the problem is solved when you remove an I/O expansion adapter from the compute node but the problem recurs when you reinstall the same adapter, suspect the I/O expansion adapter; if the problem recurs when you replace the adapter with a different one, suspect the system board.

If you suspect a networking problem and the compute node passes all the system tests, suspect a network cabling problem that is external to the system.

Collecting service data

The IBM Electronic Service Agent monitors, tracks, and captures system hardware errors and hardware and software inventory information, and reports serviceable problems directly to IBM Support. You can also choose to collect data manually. This tool is integrated into the IBM Flex System Manager Service and Support Manager. All information sent to IBM is encrypted and stored in a secure IBM database and used for improved problem determination.

For more information about the Electronic Service Agent and how to set it up, see the documentation at http://ralfss21.raleigh.ibm.com:8099/help/topic/com.ibm.acc.8731.doc/setting_up_electronic_service_agent.html.

Chapter 7. Installing, removing, and replacing compute node components

Use this information to install, remove, and replace FRUs and optional devices in the compute node.

See Chapter 5, “Parts listing, Types 7917 and 2584,” on page 51 to determine whether a component is a consumable part, Tier 1 CRU, or Tier 2 CRU.

For information about the terms of the warranty and getting service and assistance, see the *Warranty Information* document.

Installing an optional device

Some compute node components are available as both an optional device and a replaceable component. The installation procedure is the same for the optional device and the replaceable component.

Installation guidelines

Before you remove or replace a FRU or install an optional device, read the following information:

- Before you begin, read “Safety” on page v and “Handling static-sensitive devices” on page 488. This information will help you work safely.
- When you install your new compute node, take the opportunity to download and apply the most recent firmware updates. This step will help to ensure that any known issues are addressed and that your compute node is ready to function at maximum levels of performance.

  To download the latest firmware and device drivers, go to http://www.ibm.com/support/fixcentral/ and select **PureSystems, PureFlex System, Compute Node** and **x440 Compute Node**.
- Observe good housekeeping in the area where you are working. Place removed covers and other parts in a safe place.
- Back up all important data before you make changes to hard disk drives.
- Before you remove a compute node from the IBM Flex System chassis, you must shut down the operating system and turn off the compute node. You do not have to shut down the chassis itself.
- Blue on a component indicates touch points, where you can grip the component to remove it from or install it in the compute node, open or close a latch, and so on.
- For a list of supported optional devices for the compute node, see http://www.ibm.com/systems/info/x86servers/serverproven/compat/us/.

System reliability guidelines

Use these guidelines to ensure that the compute node meets the cooling and system reliability requirements:

- To ensure proper cooling, the IBM Flex System chassis is not operated without a compute node or node bay filler in each node bay. See "IBM Flex System Enterprise Chassis Types 8721, 8724, and 8725: Installation and Service Guide" at

© Copyright IBM Corp. 2012

http://ralfss21.raleigh.ibm.com:8099/help/topic/com.ibm.acc.8721.doc/product_page.html for additional information.

- A socket cover and heat-sink filler or a microprocessor and heat sink must always be installed on microprocessor sockets 1, 3, and 4. Microprocessor socket 2 will only have a socket cover when a microprocessor is not install. If the compute node has only one microprocessor, it must be installed in microprocessor socket 1.
- The air baffles are installed over the DIMM connectors.
- The ventilation holes on the compute node are not blocked.
- The compute node CMOS battery is operational. If the CMOS battery becomes defective, replace it immediately.

Handling static-sensitive devices

To reduce the possibility of damage from electrostatic discharge, observe these precautions.

Attention: Static electricity can damage the compute node and other electronic devices. To avoid damage, keep static-sensitive devices in their static-protective packages until you are ready to install them.

- When you work on a IBM Flex System chassis that has an electrostatic discharge (ESD) connector, use a wrist strap, especially when you handle modules, optional devices, or compute nodes. To work correctly, the wrist strap must have a good contact at both ends (touching your skin at one end and firmly connected to the ESD connector on the front or back of the IBM Flex System chassis).
- Limit your movement. Movement can cause static electricity to build up around you.
- Handle the device carefully, holding it by its edges or its frame.
- Do not touch solder joints, pins, or exposed circuitry.
- Do not leave the device where others can handle and damage it.
- While the device is still in its static-protective package, touch it to an *unpainted* metal part of the IBM Flex System chassis or any *unpainted* metal surface on any other grounded rack component in the rack in which you are installing the device for at least 2 seconds. This drains static electricity from the package and from your body.
- Remove the device from its package and install it directly into the compute node without setting down the device. If it is necessary to set down the device, put it back into its static-protective package. Do not place the device on the compute node cover or on a metal surface.
- Take additional care when you handle devices during cold weather. Heating reduces indoor humidity and increases static electricity.

Returning a device or component

If you are instructed to return a device or component, follow all packaging instructions, and use any packaging materials for shipping that are supplied to you.

Updating the compute node configuration

Use this information to update the compute node configuration.

When the compute node starts for the first time after you add or remove an internal device, you might receive a message that the configuration has changed. The Setup utility automatically starts so that you can save the new configuration settings. See "Using the Setup utility" on page 26 for more information about the Setup utility.

Some devices have device drivers that you must install. See the documentation that comes with each device for information about installing device drivers.

The compute node operates as a symmetric multiprocessing (SMP) compute node, regardless of how many microprocessors are installed. For optimum performance, you must upgrade the operating system to support SMP. See Chapter 3, "Installing the operating system," on page 39 and your operating-system documentation for additional information.

Removing a compute node from a chassis

Use this information to remove a compute node from a IBM Flex System chassis.

Before you begin

Before you remove a compute node, complete the following steps:

1. Read "Safety" on page v and "Installation guidelines" on page 487.
2. If the compute node is operating, shut down the operating system.
3. Press the power button to turn off the compute node (see "Turning off the compute node" on page 15 for more information).

Procedure

To remove the compute node from a chassis, complete the following steps:

1. Open the front handles as shown in the illustration. The compute node moves out of the node bay approximately 0.6 cm (0.25 inch).

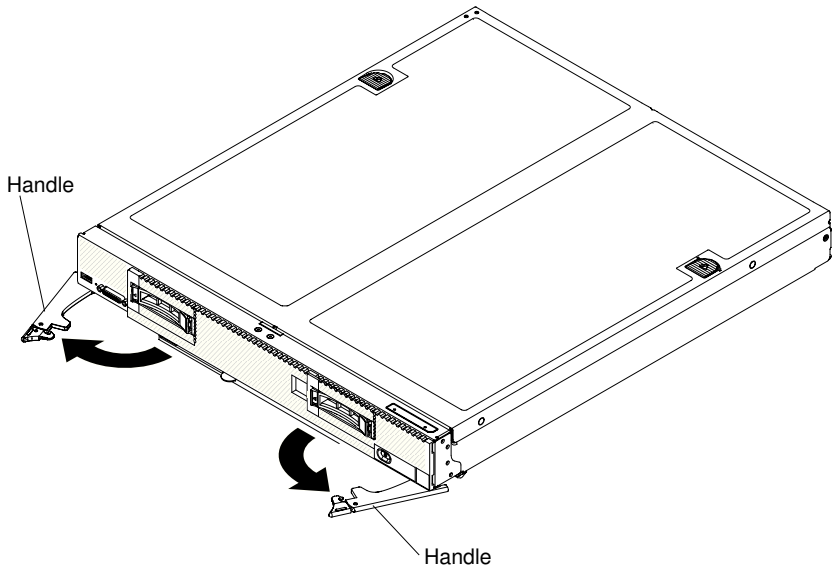

Attention:

- To maintain proper system cooling, do not operate the IBM Flex System chassis without a compute node or node bay filler installed in each node bay.
- When you remove the compute node, note the node bay number. Reinstalling a compute node into a different node bay from the one it was removed from can have unintended consequences. Some configuration information and update options are established according to node bay number. If you reinstall the compute node into a different node bay, you might have to reconfigure the compute node.

2. Pull the compute node out of the node bay.
3. Install either a node bay filler or another compute node in the node bay within 1 minute.

What to do next

If you are instructed to return the compute node, follow all packaging instructions, and use any packaging materials for shipping that are supplied to you.

Installing a compute node in a chassis

Use this information to install a compute node in a IBM Flex System chassis.

Before you begin

- Before you install a IBM Flex System x440 Compute Node in a chassis that is managed by IBM Flex System Manager management software, make sure that the management software is version 1.1.1.0 or later. To determine whether your management software must be updated, and for more information about downloading and installing an update, see the "Updating systems" section of the *IBM Flex System Manager Systems Management Guide* at http://publib.boulder.ibm.com/infocenter/flexsys/information/topic/com.ibm.director.updates.helps.doc/fqm0_t_um_updating_director_features.html.
- Before you install a IBM Flex System x440 Compute Node in a chassis, make sure the Chassis Management Module firmware release date is 08/20/2012 or later. To determine whether your CMM firmware must be updated, log on to the IBM Chassis Management Module web interface. Click on the **Chassis Management Module** in the graphical user interface; then, select **Firmware** . To update the CMM firmware to the latest release, see Fix Central at http://www.ibm.com/support/fixcentral/. Select **PureSystems**, **PureFlex System**, **Chassis**, **Enterprise Chassis**, **Your operating system** and **Continue**.
- If you are installing a compute node model that does not have an integrated Ethernet controller, you must install a network interface adapter before you install the compute node in the chassis for management network communication. For a list of supported optional devices for the compute node, see http://www.ibm.com/systems/info/x86servers/serverproven/compat/us/.

Before you install the compute node in a chassis, read “Safety” on page v and “Installation guidelines” on page 487.

Statement 21

CAUTION:
Hazardous energy is present when the compute node is connected to the power source. Always replace the compute node cover before installing the compute node.

Procedure

To install the compute node in a chassis, complete the following steps.

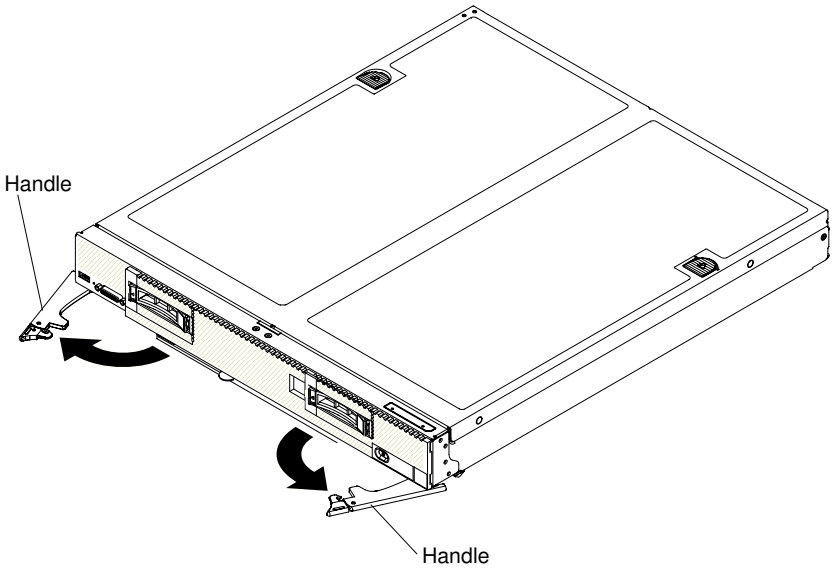

1. Select the node bay.

   Notes:

   a. If you are reinstalling a compute node that you removed, you must install it in the same node bay from which you removed it. Some compute node configuration information and update options are established according to node bay number. Reinstalling a compute node into a different node bay can have unintended consequences. If you reinstall the compute node into a different node bay, you might have to reconfigure the compute node.

   b. To maintain proper system cooling, do not operate the IBM Flex System chassis without a compute node or node bay filler in each node bay.

2. Make sure that the front handles on the compute node are in the open position.
3. Slide the compute node into the node bay until it stops.
4. Push the front handles on the front of the compute node to the closed position.

   Note: After the compute node is installed, the IMM2 in the compute node initializes and synchronizes with the Chassis Management Module. This process takes approximately 90 seconds to complete. The power LED flashes rapidly, and the power button on the compute node does not respond until this process is complete.

5. Turn on the compute node (see "Turning on the compute node" on page 13 for instructions).
6. Make sure that the power LED on the compute node control panel is lit continuously, indicating that the compute node is receiving power and is turned on.
7. If you have other compute nodes to install, do so now.

8. You can place identifying information on the label tabs that are accessible from the front of the compute node.

What to do next

If this is the initial installation of the compute node in the chassis, you must configure the compute node through the Setup utility and install the compute node operating system. See "Updating the compute node configuration" on page 488 and Chapter 3, "Installing the operating system," on page 39 for details.

If you have changed the configuration of the compute node or if you are installing a different compute node from the one that you removed, you must configure the compute node through the Setup utility, and you might have to install the compute node operating system (see "Using the Setup utility" on page 26).

Removing and replacing Tier 1 customer replaceable units (CRUs)

Use this information for removing and replacing Tier 1 CRUs.

About this task

Replacement of Tier 1 CRUs is your responsibility. If IBM installs a Tier 1 CRU at your request, you will be charged for the installation.

Removing the adapter-retention assembly

Use this information to remove the adapter-retention assembly.

Before you begin

Before you remove the adapter-retention assembly, complete the following steps:

1. Read "Safety" on page v and "Installation guidelines" on page 487.
2. If the compute node is installed in an IBM Flex System chassis, remove it (see "Removing a compute node from a chassis" on page 489 for instructions).
3. Carefully lay the compute node on a flat, static-protective surface, orienting the compute node with the bezel pointing toward you.

About this task

The adapter-retention assembly consists of five separate parts. You can replace only the parts that you choose and save the unused parts for future use.

Procedure

To remove the adapter-retention assembly, complete the following steps.

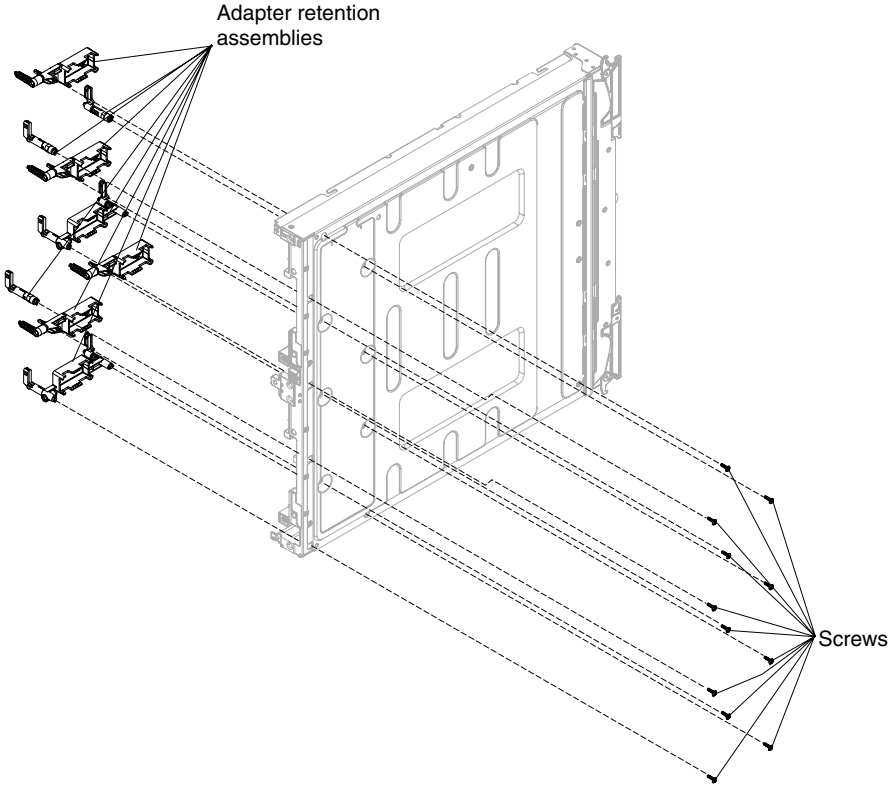

1. Remove the cover (see “Removing the compute node cover” on page 498).
2. Remove the air baffles.
3. If necessary, remove the I/O expansion adapters (see “Removing an I/O expansion adapter” on page 524).
4. Carefully place the chassis on its side with the front handle side up.
5. Using a T9 Torx screwdriver, remove the three screws that secure the adapter-retention assembly.
6. Lift the adapter-retention assembly from the system board.
7. Carefully return the chassis to the bottom-side-down orientation.

What to do next

If you are instructed to return the adapter-retention assembly, follow all packaging instructions, and use any packaging materials for shipping that are supplied to you.

Installing the adapter-retention assembly

Use this information to install the adapter-retention assembly.

Before you begin

Before you install the adapter-retention assembly, complete the following steps:

1. Read “Safety” on page v and “Installation guidelines” on page 487.
2. If the compute node is installed in an IBM Flex System chassis, remove it (see “Removing a compute node from a chassis” on page 489 for instructions).

3. Carefully lay the compute node on a flat, static-protective surface, orienting the compute node with the bezel pointing toward you.

About this task

The adapter-retention assembly consists of five separate parts. You can replace only the parts that you choose and save the unused parts for future use.

Procedure

To install the adapter-retention assembly, complete the following steps.

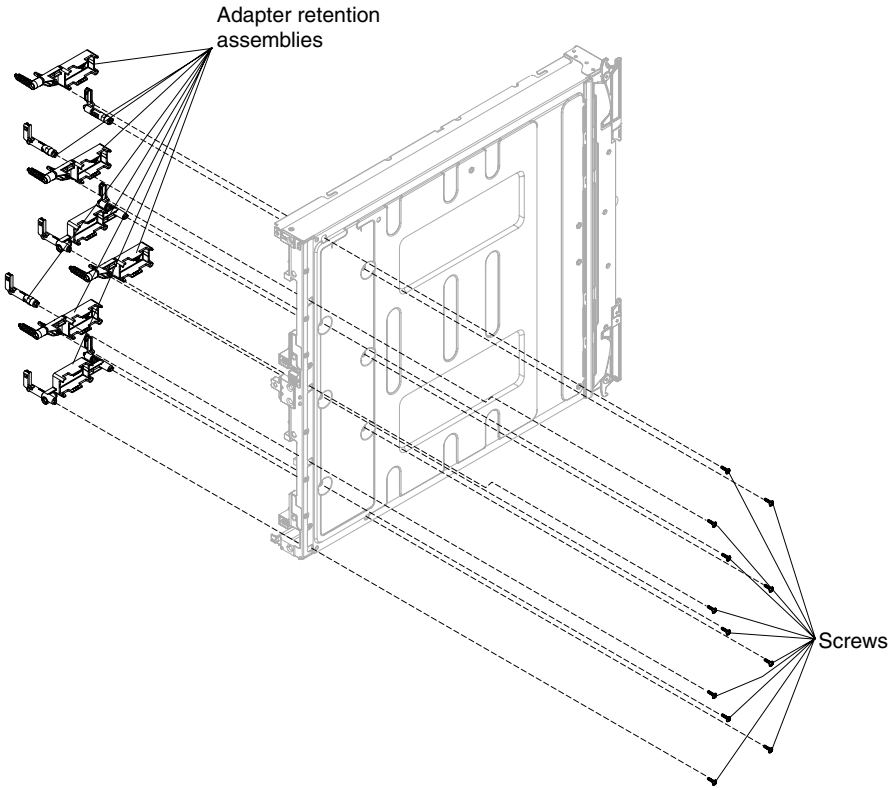

1. Remove the cover (see "Removing the compute node cover" on page 498).
2. Remove the air baffles.
3. Carefully place the chassis on its side with the front handle side up.
4. Align the adapter-retention assembly on the system board.
5. Using a T9 Torx screwdriver, install the screws that secure the adapter-retention assembly.
6. Carefully return the chassis to the bottom-side-down orientation.
7. Install the I/O expansion adapters, if you removed them (see "Installing an I/O expansion adapter" on page 525).
8. Install the air baffles.

   Attention: Install the air baffles with the arrow indicating airflow direction pointing to the rear of the compute node.

What to do next

After you install the adapter-retention assembly, complete the following steps:

1. Install the cover onto the compute node (see “Installing the compute node cover” on page 500 for instructions).
2. Install the compute node into the chassis (see “Installing a compute node in a chassis” on page 490 for instructions).

Removing the bezel

Use this information to remove the bezel.

Before you begin

Before you remove the bezel, read “Safety” on page v and “Installation guidelines” on page 487.

Procedure

To remove the bezel, complete the following steps.

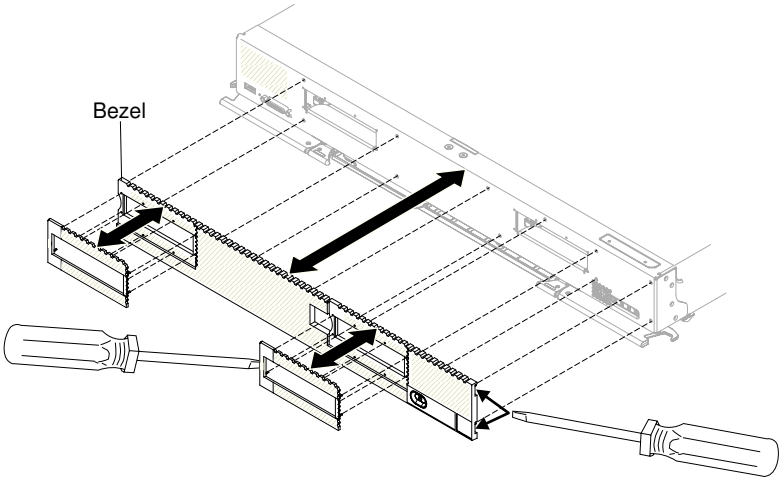

1. Use a flat-blade screwdriver to carefully pull the bezel from the compute node.
2. Lift the bezel from the compute node.

What to do next

If you are instructed to return the bezel, follow all packaging instructions, and use any packaging materials for shipping that are supplied to you.

Installing the bezel

Use this information to install the bezel.

Before you begin

Before you install the bezel, read “Safety” on page v and “Installation guidelines” on page 487.

Procedure

To install the bezel, complete the following steps.

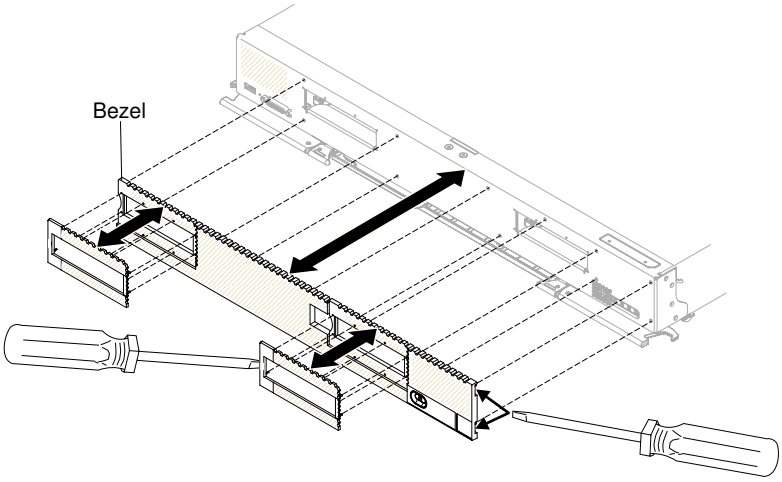

1. Position the bezel on the front of the compute node.
2. Press the bezel securely against the chassis.

   Note: Make sure that the bezel is pressed flat against the chassis around the power button, to maintain access to the power button.

Removing the CMOS battery

Use this information to remove the CMOS battery.

Before you begin

Before you remove the CMOS battery, complete the following steps:

1. Read "Safety" on page v and "Installation guidelines" on page 487.
2. If the compute node is installed in an IBM Flex System chassis, remove it (see "Removing a compute node from a chassis" on page 489 for instructions).
3. Carefully lay the compute node on a flat, static-protective surface, orienting the compute node with the bezel pointing toward you.

Procedure

To remove the CMOS battery, complete the following steps:

1. Remove the cover (see "Removing the compute node cover" on page 498).
2. Locate the CMOS battery on the system board (see "System-board connectors" on page 16).
3. If a cover is over the CMOS battery, remove the cover.
4. Pivot the CMOS battery toward the middle of the compute node.

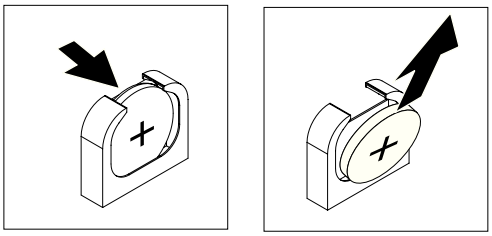

5. Lift the CMOS battery from the socket.

What to do next

After you remove the CMOS battery, dispose of the CMOS battery as required by local ordinances or regulations.

Installing the CMOS battery

Use this information to install a CMOS battery.

Before you begin

Before you install the CMOS battery, complete the following steps:

1. Read "Safety" on page v and "Installation guidelines" on page 487.
2. If the compute node is installed in an IBM Flex System chassis, remove it (see "Removing a compute node from a chassis" on page 489 for instructions).
3. Carefully lay the compute node on a flat, static-protective surface, orienting the compute node with the bezel pointing toward you.

About this task

The following notes describe information that you must consider when you are replacing the CMOS battery in the compute node:

- You must replace the CMOS battery with a lithium CMOS battery of the same type.
- To order replacement batteries, call 1-800-426-7378 within the United States, and 1-800-465-7999 or 1-800-465-6666 within Canada. Outside the U.S. and Canada, call your IBM marketing representative or authorized reseller.
- After you replace the CMOS battery, you must reconfigure the compute node and reset the system date and time.
- To avoid possible danger, read and follow the following safety statement.

Statement 2

CAUTION:
When replacing the lithium battery, use only IBM Part Number 33F8354 or an equivalent type battery recommended by the manufacturer. If your system has a module containing a lithium battery, replace it only with the same module type made by the same manufacturer. The battery contains lithium and can explode if not properly used, handled, or disposed of.

Do not:

- **Throw or immerse into water**
- **Heat to more than 100° C (212° F)**
- **Repair or disassemble**

Dispose of the battery as required by local ordinances or regulations.

Attention: Touching the CMOS battery on a metal surface, such as the side of the compute node, when you replace the CMOS battery can cause it to fail.

Procedure

To install a CMOS battery, complete the following steps:

1. Remove the cover (see "Removing the compute node cover").
2. Follow any special handling and installation instructions that come with the CMOS battery.
3. Locate the CMOS battery socket on the system board (see "System-board connectors" on page 16).
4. Orient the CMOS battery so that the positive (+) side faces in toward the center of the compute node.

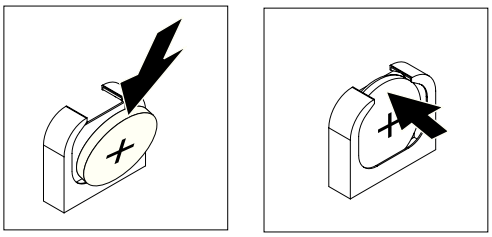

5. Pivot the CMOS battery so that you can insert it into the bottom of the socket.
6. As you slide the CMOS battery into place, press the top of the CMOS battery into the socket.
7. If you removed a cover from the battery, replace the cover.

What to do next

After you install the CMOS battery, complete the following steps:

1. Install the cover onto the compute node (see "Installing the compute node cover" on page 500 for instructions).
2. Install the compute node into the chassis (see "Installing a compute node in a chassis" on page 490 for instructions).
3. Turn on the compute node, start the Setup utility, and reset the configuration (see "Using the Setup utility" on page 26 for instructions).

Removing the compute node cover

Use this information to remove the cover from a compute node.

Before you begin

Before you remove the compute node cover, complete the following steps:

1. Read "Safety" on page v and "Installation guidelines" on page 487.
2. If the compute node is installed in a IBM Flex System chassis, remove it (see "Removing a compute node from a chassis" on page 489 for instructions).
3. Carefully lay the compute node on a flat, static-protective surface, orienting the compute node with the bezel pointing toward you.

Statement 12

CAUTION:
The following label indicates a hot surface nearby.

Statement 21

CAUTION:
Hazardous energy is present when the compute node is connected to the power source. Always replace the compute node cover before installing the compute node.

Procedure

To remove the compute node cover, complete the following steps:

1. Press on the release button and the push point at the same time and slide the cover toward the rear of the compute node.
2. Lift the cover away from the compute node.

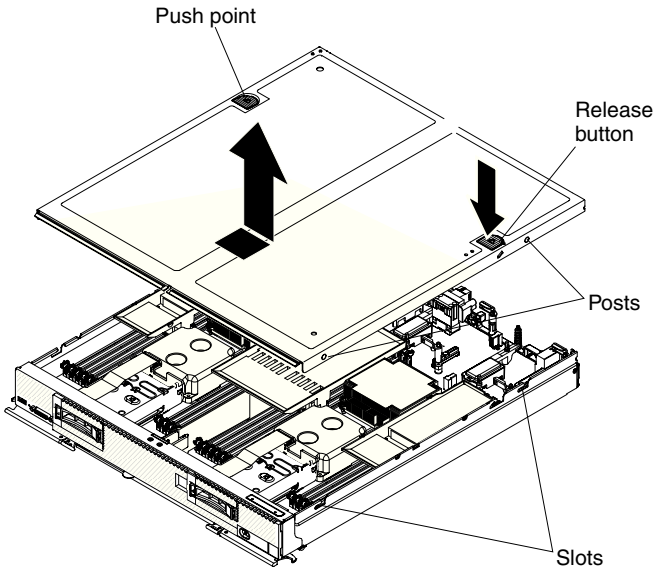

3. Lay the cover flat or store it for future use.

What to do next

If you are instructed to return the cover, follow all packaging instructions, and use any packaging materials for shipping that are supplied to you.

Installing the compute node cover

Use this information to install the compute node cover.

Before you begin

Before you install the compute node cover, read "Safety" on page v and "Installation guidelines" on page 487.

Attention: You cannot insert the compute node into the IBM Flex System chassis until the cover is installed and closed. Do not attempt to override this protection.

Statement 21

CAUTION:
Hazardous energy is present when the compute node is connected to the power source. Always replace the compute node cover before installing the compute node.

Procedure

To install the compute node cover, complete the following steps:

1. Carefully lay the compute node on a flat, static-protective surface, orienting the compute node with the bezel pointing toward you.
2. Orient the cover so that the posts on the inside of the cover slide into the slots on the compute node.

   Note: Before you close the cover, make sure that the air baffles and all components are installed and seated correctly and that you have not left loose tools or parts inside the compute node.

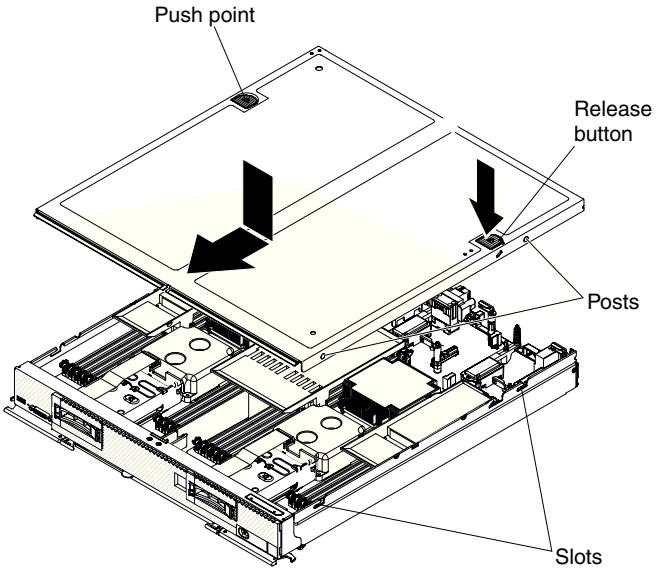

3. Hold the front of the compute node and slide the cover forward to the closed position, until it clicks into place.

What to do next

After you install the compute node cover, install the compute node into the chassis (see "Installing a compute node in a chassis" on page 490 for instructions).

Removing a DIMM

Use this information to remove a dual inline memory module (DIMM).

Before you begin

Before you remove a DIMM, complete the following steps:

1. Read "Safety" on page v and "Installation guidelines" on page 487.
2. If the compute node is installed in an IBM Flex System chassis, remove it (see "Removing a compute node from a chassis" on page 489 for instructions).
3. Carefully lay the compute node on a flat, static-protective surface, orienting the compute node with the bezel pointing toward you.

About this task

After you install or remove a DIMM, you must change and save the new configuration information by using the Setup utility. When you turn on the compute node, a message indicates that the memory configuration has changed. Start the Setup utility and select **Save Settings** (see "Using the Setup utility" on page 26 for more information) to save changes.

Procedure

To remove a DIMM, complete the following steps.

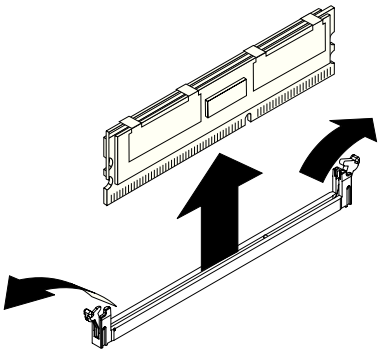

1. Remove the cover (see "Removing the compute node cover" on page 498).
2. Remove the air baffle that is installed over the DIMM connector.

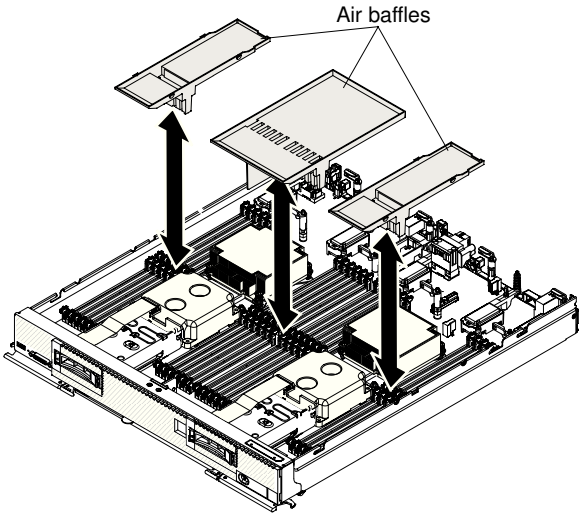

3. Locate the DIMM connectors (see "System-board connectors" on page 16). Determine which DIMM you want to remove from the compute node.

   Note: You might have to remove the mezzanine.
   Attention: To avoid breaking the retaining clips or damaging the DIMM connectors, handle the clips gently.
4. Make sure that both retaining clips on the DIMM connector from which you are removing the DIMM are in the open position.

   Note: You might have to remove the mezzanine.
5. Pull the DIMM out of the connector.
6. If you are not immediately replacing the DIMM, install the air baffle.
   Attention:
   - Install the air baffles with the arrow indicating air flow direction pointing to the rear of the compute node.
   - To maintain proper system cooling, do not operate the compute node without air baffles installed over the DIMM connectors.

What to do next

If you are instructed to return the DIMM, follow all packaging instructions, and use any packaging materials for shipping that are supplied to you.

Installing a DIMM

Use this information to install a DIMM.

Before you begin

Before you install a DIMM, complete the following steps:

1. Read "Safety" on page v and "Installation guidelines" on page 487.
2. Read the documentation that comes with the DIMMs.
3. If the compute node is installed in an IBM Flex System chassis, remove it (see "Removing a compute node from a chassis" on page 489 for instructions).
4. Carefully lay the compute node on a flat, static-protective surface, orienting the compute node with the bezel pointing toward you.

About this task

This component can be installed as an optional device or as a CRU. The installation procedure is the same for the optional device and the CRU.

After you install or remove a DIMM, you must change and save the new configuration information by using the Setup utility. When you turn on the compute node, a message indicates that the memory configuration has changed. Start the Setup utility and select **Save Settings** (see "Using the Setup utility" on page 26 for more information) to save changes.

If you are installing a DIMM as a result of a DIMM failure, you might have to reenable the DIMM. To re-enable the DIMM, complete the following steps:

1. Verify that the amount of installed memory is the expected amount of memory through the operating system, by watching the monitor as the compute node starts, by using the CMM `sol` command, or through IBM Flex System Manager management software.
   - For more information about the CMM `sol` command, see the "IBM Flex System Chassis Management Module: Command-Line Interface Reference Guide" at http://ralfss21.raleigh.ibm.com:8099/help/topic/com.ibm.acc.cmm.doc/cli_command_sol.html.
   - For more information about IBM Flex System Manager management software, see the "IBM Flex System Manager Software: Installation and Service Guide" at http://ralfss21.raleigh.ibm.com:8099/help/topic/com.ibm.acc.8731.doc/product_page.html.
2. Run the Setup utility to reenable the DIMMs (see "Using the Setup utility" on page 26 for more information).

The compute node has a total of 48 dual inline memory module (DIMM) connectors. The compute node supports low-profile (LP) DDR3 DIMMs with error-correcting code (ECC) in 4 GB, 8 GB, 16 GB and 32 GB capacities.

The following illustration shows the system-board components, including the DIMM connectors.

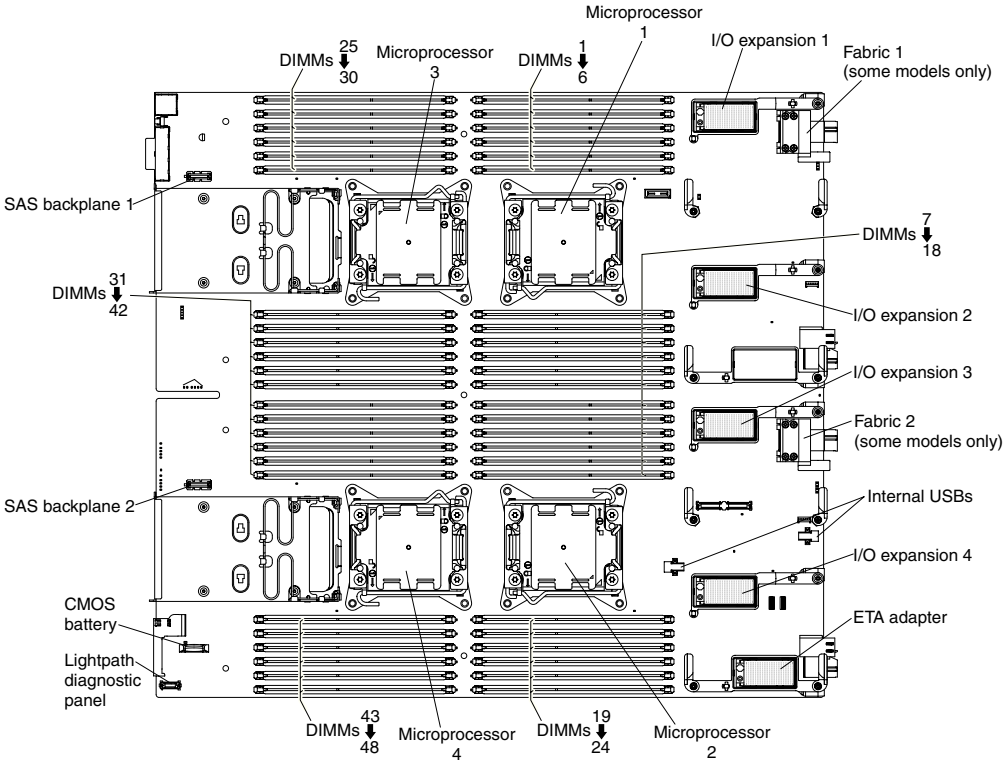

The following tables list the expected memory bus speeds based on the type of DIMM installed and the voltage that the DIMM is running.

Table 8. Memory Speeds and Configurations – Max Performance

DIMM by rank, type, technology	FRU number	DIMM capacity	Speed (MHz) and Voltage Supported by DPC					
			1 DPC		2 DPC		3 DPC	
			1.35V	1.50V	1.35V	1.50V	1.35V	1.50V
SR x4 RDIMM – 2Gb (1333 MHz)	49Y1424	4 GB	1333		1333			1066
DR x8 RDIMM – 2Gb (1333 MHz)	49Y1425	4 GB	1333		1333			1066
SR x4 RDIMM – 2Gb (1600 MHz)	49Y1561	4 GB	N/A	1600	N/A	1600	N/A	1066
DR x4 RDIMM – 2Gb (1333 MHz)	49Y1415	8 GB	1333		1333			1066
DR x4 RDIMM – 2Gb (1600 MHz)	49Y1415	8 GB	N/A	1600	N/A	1600	N/A	1066

Table 8. Memory Speeds and Configurations – Max Performance (continued)

DIMM by rank, type, technology	FRU number	DIMM capacity	Speed (MHz) and Voltage Supported by DPC					
DR x4 RDIMM – 4Gb (1333 MHz)	49Y1565	16 GB	1333		1333			1066
DR x4 RDIMM – 4Gb (1600 MHz)	00D4970	16 GB	N/A	1600	N/A	1600	N/A	1066
QR x4 LR-DIMM – 2Gb (1333 MHz)	49Y1569	16 GB		1333		1333	1066	
QR x4 LR-DIMM – 4Gb (1333 MHz)	90Y3107	32 GB		1333		1333	1066	
Note: Mixing of DIMM types is not supported.								

Table 9. Memory Speeds and Configurations – Balanced

DIMM by rank, type, technology	FRU number	DIMM capacity	Speed (MHz) and Voltage Supported by DPC					
			1 DPC		2 DPC		3 DPC	
			1.35V	1.50V	1.35V	1.50V	1.35V	1.50V
SR x4 RDIMM – 2Gb (1333 MHz)	49Y1424	4 GB	1066		1066			800
DR x8 RDIMM – 2Gb (1333 MHz)	49Y1425	4 GB	1066		1066			800
SR x4 RDIMM – 2Gb (1600 MHz)	49Y1561	4 GB	N/A	1333	N/A	1333	N/A	800
DR x4 RDIMM – 2Gb (1333 MHz)	49Y1415	8 GB	1066		1066			800
DR x4 RDIMM – 2Gb (1600 MHz)	49Y1415	8 GB	N/A	1333	N/A	1333	N/A	800
DR x4 RDIMM – 4Gb (1333 MHz)	49Y1565	16 GB	1066		1066			800

Table 9. Memory Speeds and Configurations – Balanced (continued)

DIMM by rank, type, technology	FRU number	DIMM capacity	Speed (MHz) and Voltage Supported by DPC					
DR x4 RDIMM – 4Gb (1600 MHz)	00D4970	16 GB	N/A	1333	N/A	1333	N/A	800
QR x4 LR-DIMM – 2Gb (1333 MHz)	49Y1569	16 GB	800		800		800	
QR x4 LR-DIMM – 4Gb (1333 MHz)	90Y3107	32 GB	800		800		800	

Table 10. Memory Speeds and Configurations – Minimum Power

DIMM by rank, type, technology	FRU number	DIMM capacity	Speed (MHz) and Voltage Supported by DPC					
			1 DPC		2 DPC		3 DPC	
			1.35V	1.50V	1.35V	1.50V	1.35V	1.50V
SR x4 RDIMM – 2Gb (1333 MHz)	49Y1424	4 GB	800		800			800
DR x8 RDIMM – 2Gb (1333 MHz)	49Y1425	4 GB	800		800			800
SR x4 RDIMM – 2Gb (1600 MHz)	49Y1561	4 GB	N/A	800	N/A	800	N/A	800
DR x4 RDIMM – 2Gb (1333 MHz)	49Y1415	8 GB	800		800			800
DR x4 RDIMM – 2Gb (1600 MHz)	49Y1415	8 GB	N/A	800	N/A	800	N/A	800
DR x4 RDIMM – 4Gb (1333 MHz)	49Y1565	16 GB	800		800			800
DR x4 RDIMM – 4Gb (1600 MHz)	00D4970	16 GB	N/A	800	N/A	800	N/A	800

Table 10. Memory Speeds and Configurations – Minimum Power (continued)

DIMM by rank, type, technology	FRU number	DIMM capacity	Speed (MHz) and Voltage Supported by DPC					
QR x4 LR-DIMM – 2Gb (1333 MHz)	49Y1569	16 GB	800		800		800	
QR x4 LR-DIMM – 4Gb (1333 MHz)	90Y3107	32 GB	800		800		800	

The memory is accessed internally through 16 channels (four channels for each microprocessor). Each channel contains three DIMM connectors. Each channel can have a maximum of eight ranks. The following table lists each channel and shows which DIMM connectors are in the channel.

Table 11. Memory-channel configuration

Microprocessor	Memory channel	DIMM connectors
Microprocessor 1	Channel 1	1, 2, and 3
	Channel 0	4, 5, and 6
	Channel 2	7, 8, and 9
	Channel 3	10, 11, and 12
Microprocessor 2	Channel 1	13, 14, and 15
	Channel 0	16, 17, and 18
	Channel 2	19, 20, and 21
	Channel 3	22, 23, and 14
Microprocessor 3	Channel 2	25, 26, and 27
	Channel 3	28, 29, and 30
	Channel 1	31, 32, and 33
	Channel 0	34, 35, and 36
Microprocessor 4	Channel 2	37, 38, and 39
	Channel 3	40, 41, and 42
	Channel 1	43, 44, and 45
	Channel 0	46, 47, and 48

The following notes describe information that you must consider when you install memory:

- You cannot mix RDIMMs and LRDIMMs in the same compute node.
- A total of eight ranks on each channel is supported.
- If a quad-rank DIMM is installed, install it in the connector at the end of the memory channel.
- If a channel has one or more quad-rank RDIMMs, only two DIMMs per channel is supported. The quad-rank, eight rank per channel limitation only applies to RDIMMs. Quad-rank LRDIMMs can be installed at three DIMMs per channel since the processor recognizes LRDIMMs as dual-rank DIMMs.

There are three memory modes:

- **Independent-channel mode:** Independent-channel mode provides a maximum of 384 GB of usable memory per processor and 1536 GB of usable memory with all four processors installed using 32 GB DIMMs. DIMMs must be first installed in the last physical DIMM connector of each channel. DIMMs should also be installed one DIMM per channel first. The best performance is seen with an even memory distribution among all four channels on the microprocessor. DIMMs can be installed without matching sizes. Individual channels may run at different DIMM timings, but all channels must run at the same interface frequency. DIMMs with different timing parameters can be installed in different connectors of the same channel, but only timings that support the slowest DIMM are applied to all the DIMMs. Faster DIMMs operate at timings that are supported by the slowest installed DIMM.
- **Mirrored-channel mode:** In mirrored-channel mode, memory is installed in pairs. Both DIMMs in a pair must be identical in capacity, type, and rank count. The channels are grouped in pairs with each channel receiving the same data. One channel is used as a backup of the other, which provides redundancy. In mirrored-channel mode, memory must be installed in pairs. The memory content is mirrored between channel 0 and channel 1 and between channel 2 and channel 3. Mirrored-channel mode requires that channel 0 and channel 1, and channel 2 and channel 3 are be populated identically in regard to size and organization. DIMM connector populations within a channel do not have to be identical, but the same DIMM connector location across channel 0 and channel 1 and across channel 2 and channel 3 must be populated in the same way. The effective memory that is available to the system is only half of what is installed.
- **Rank-sparing mode:** In rank-sparing mode, one memory DIMM rank serves as a spare of the other ranks on the same channel. The spare rank is held in reserve and is not used as active memory. The spare rank must have identical or larger memory capacity than all the other active DIMM ranks on the same channel. After an error threshold is surpassed, the contents of that rank are copied to the spare rank. The failed rank of DIMMs is taken offline, and the spare rank is put online and used as active memory in place of the failed rank.

  The following notes describe additional information that you must consider when you select rank-sparing memory mode:

  - Memory sparing on one channel is independent of the sparing on all other channels.
  - You can use the Setup utility to determine the status of the DIMM ranks.
  - If only one DIMM is present in a channel and the DIMM is dual or single rank, then sparing mode should not be enabled.

  Rank-sparing on one channel is independent of the sparing on all other channels. You can use the Setup utility to determine the status of the DIMM ranks.

Install DIMMs in the order that is indicated in the following table for independent-channel mode.

Table 12. DIMM population sequence for independent-channel mode

Number of DIMMs installed	1 microprocessor installed	2 microprocessors installed	4 microprocessors installed
1	DIMM 4	DIMM 4	DIMM 4
2	DIMMs 1 and 4	DIMMs 4 and 16	DIMMs 4 and 16
3	DIMMs 1, 4, and 9	DIMMs 1, 4, and 16	DIMMs 4, 16, and 33

Table 12. DIMM population sequence for independent-channel mode (continued)

Number of DIMMs installed	1 microprocessor installed	2 microprocessors installed	4 microprocessors installed
4	DIMMs 1, 4, 9, and 12	DIMMs 1, 4, 13, and 16	DIMMs 4, 16, 33, and 45
5	DIMMs 1, 4, 9, 5, and 12	DIMMs 1, 4, 9, 13, and 16	DIMMs 1, 4, 16, 33, and 45
6	DIMMs 1, 2, 4, 9, 5, and 12	DIMMs 1, 4, 9, 13, 16, and 21	DIMMs 1, 4, 13, 16, 33, and 45
7	DIMMs 1, 2, 4, 8, 9, 5, and 12	DIMMs 1, 4, 9, 12, 13, 16, and 21	DIMMs 1, 4, 13, 16, 33, 36, and 45
8	DIMMs 1, 2, 4, 8, 9, 5, 11, and 12	DIMMs 1, 4, 9, 12, 13, 16, 21, and 24	DIMMs 1, 4, 13, 16, 33, 36, 45, and 48
9	DIMMs 1, 2, 4, 6, 8, 9, 5, 11, and 12	DIMMs 1, 4, 5, 9, 12, 13, 16, 21, and 24	DIMMs 1, 4, 9, 13, 16, 33, 36, 45, and 48
10	DIMMs 1, 2, 3, 4, 6, 8, 9, 5, 11, and 12	DIMMs 1, 4, 5, 9, 12, 13, 16, 17, 21, and 24	DIMMs 1, 4, 9, 13, 16, 21, 33, 36, 45, and 48
11	DIMMs 1, 2, 3, 4, 6, 7, 8, 9, 5, 11, and 12	DIMMs 1, 2, 4, 5, 9, 12, 13, 16, 17, 21, and 24	DIMMs 1, 4, 9, 13, 16, 21, 28, 33, 36, 45, and 48
12	DIMMs 1, 2, 3, 4, 6, 7, 8, 9, 10, 5, 11, and 12	DIMMs 1, 2, 4, 5, 9, 12, 13, 14, 16, 17, 21, and 24	DIMMs 1, 4, 9, 13, 16, 21, 28, 33, 36, 40, 45, and 48
13		DIMMs 1, 2, 4, 5, 8, 9, 12, 13, 14, 16, 17, 21, and 24	DIMMs 1, 4, 9, 12, 13, 16, 21, 28, 33, 36, 40, 45, and 48
14		DIMMs 1, 2, 4, 5, 8, 9, 12, 13, 14, 16, 17, 20, 21, and 24	DIMMs 1, 4, 9, 12, 13, 16, 21, 24, 28, 33, 36, 40, 45, and 48
15		DIMMs 1, 2, 4, 5, 8, 9, 11, 12, 13, 14, 16, 17, 20, 21, and 24	DIMMs 1, 4, 9, 12, 13, 16, 21, 24, 25, 28, 33, 36, 40, 45, and 48
16		DIMMs 1, 2, 4, 5, 8, 9, 11, 12, 13, 14, 16, 17, 20, 21, 23, and 24	DIMMs 1, 4, 9, 12, 13, 16, 21, 24, 25, 28, 33, 36, 37, 40, 45, and 48
17		DIMMs 1, 2, 4, 5, 6, 8, 9, 11, 12, 13, 14, 16, 17, 20, 21, 23, and 24	DIMMs 1, 4, 5, 9, 12, 13, 16, 21, 24, 25, 28, 33, 36, 37, 40, 45, and 48
18		DIMMs 1, 2, 4, 5, 6, 8, 9, 11, 12, 13, 14, 16, 17, 18, 20, 21, 23, and 24	DIMMs 1, 4, 5, 9, 12, 13, 16, 17, 21, 24, 25, 28, 33, 36, 37, 40, 45, and 48
19		DIMMs 1, 2, 3, 4, 5, 6, 8, 9, 11, 12, 13, 14, 16, 17, 18, 20, 21, 23, and 24	DIMMs 1, 4, 5, 9, 12, 13, 16, 17, 21, 24, 25, 28, 32, 33, 36, 37, 40, 45, and 48
20		DIMMs 1, 2, 3, 4, 5, 6, 8, 9, 11, 12, 13, 15, 14, 16, 17, 18, 20, 21, 23, and 24	DIMMs 1, 4, 5, 9, 12, 13, 16, 17, 21, 24, 25, 28, 32, 33, 36, 37, 40, 44, 45, and 48

Table 12. DIMM population sequence for independent-channel mode (continued)

Number of DIMMs installed	1 microprocessor installed	2 microprocessors installed	4 microprocessors installed
21		DIMMs 1, 2, 3, 4, 5, 6, 7, 8, 9, 11, 12, 13, 15, 14, 16, 17, 18, 20, 21, 23, and 24	DIMMs 1, 2, 4, 5, 9, 12, 13, 16, 17, 21, 24, 25, 28, 32, 33, 36, 37, 40, 44, 45, and 48
22		DIMMs 1, 2, 3, 4, 5, 6, 7, 8, 9, 11, 12, 13, 15, 14, 16, 17, 18, 19, 20, 21, 23, and 24	DIMMs 1, 2, 4, 5, 9, 12, 13, 14, 16, 17, 21, 24, 25, 28, 32, 33, 36, 37, 40, 44, 45, and 48
23		DIMMs 1, 2, 3, 4, 5, 6, 7, 8, 9, 10, 11, 12, 13, 15, 14, 16, 17, 18, 19, 20, 21, 23, and 24	DIMMs 1, 2, 4, 5, 9, 12, 13, 14, 16, 17, 21, 24, 25, 28, 32, 33, 35, 36, 37, 40, 44, 45, and 48
24		DIMMs 1, 2, 3, 4, 5, 6, 7, 8, 9, 10, 11, 12, 13, 15, 14, 16, 17, 18, 19, 20, 21, 22, 23, and 24	DIMMs 1, 2, 4, 5, 9, 12, 13, 14, 16, 17, 21, 24, 25, 28, 32, 33, 35, 36, 37, 40, 44, 45, 47, and 48
25			DIMMs 1, 2, 4, 5, 8, 9, 12, 13, 14, 16, 17, 21, 24, 25, 28, 32, 33, 35, 36, 37, 40, 44, 45, 47, and 48
26			DIMMs 1, 2, 4, 5, 8, 9, 12, 13, 14, 16, 17, 20, 21, 24, 25, 28, 32, 33, 35, 36, 37, 40, 44, 45, 47, and 48
27			DIMMs 1, 2, 4, 5, 8, 9, 12, 13, 14, 16, 17, 20, 21, 24, 25, 28, 29, 32, 33, 35, 36, 37, 40, 44, 45, 47, and 48
28			DIMMs 1, 2, 4, 5, 8, 9, 12, 13, 14, 16, 17, 20, 21, 24, 25, 28, 29, 32, 33, 35, 36, 37, 40, 41, 44, 45, 47, and 48
29			DIMMs 1, 2, 4, 5, 8, 9, 11, 12, 13, 14, 16, 17, 20, 21, 24, 25, 28, 29, 32, 33, 35, 36, 37, 40, 41, 44, 45, 47, and 48
30			DIMMs 1, 2, 4, 5, 8, 9, 11, 12, 13, 14, 16, 17, 20, 21, 23, 24, 25, 28, 29, 32, 33, 35, 36, 37, 40, 41, 44, 45, 47, and 48

Table 12. DIMM population sequence for independent-channel mode (continued)

Number of DIMMs installed	1 microprocessor installed	2 microprocessors installed	4 microprocessors installed
31			DIMMs 1, 2, 4, 5, 8, 9, 11, 12, 13, 14, 16, 17, 20, 21, 23, 24, 25, 26, 28, 29, 32, 33, 35, 36, 37, 40, 41, 44, 45, 47, and 48
32			DIMMs 1, 2, 4, 5, 8, 9, 11, 12, 13, 14, 16, 17, 20, 21, 23, 24, 25, 26, 28, 29, 32, 33, 35, 36, 37, 38, 40, 41, 44, 45, 47, and 48
33			DIMMs 1, 2, 4, 5, 6, 8, 9, 11, 12, 13, 14, 16, 17, 20, 21, 23, 24, 25, 26, 28, 29, 32, 33, 35, 36, 37, 38, 40, 41, 44, 45, 47, and 48
34			DIMMs 1, 2, 4, 5, 6, 8, 9, 11, 12, 13, 14, 16, 17, 18, 20, 21, 23, 24, 25, 26, 28, 29, 32, 33, 35, 36, 37, 38, 40, 41, 44, 45, 47, and 48
35			DIMMs 1, 2, 4, 5, 6, 8, 9, 11, 12, 13, 14, 16, 17, 18, 20, 21, 23, 24, 25, 26, 28, 29, 31, 32, 33, 35, 36, 37, 38, 40, 41, 44, 45, 47, and 48
36			DIMMs 1, 2, 4, 5, 6, 8, 9, 11, 12, 13, 14, 16, 17, 18, 20, 21, 23, 24, 25, 26, 28, 29, 31, 32, 33, 35, 36, 37, 38, 40, 41, 43, 44, 45, 47, and 48
37			DIMMs 1, 2, 3, 4, 5, 6, 8, 9, 11, 12, 13, 14, 16, 17, 18, 20, 21, 23, 24, 25, 26, 28, 29, 31, 32, 33, 35, 36, 37, 38, 40, 41, 43, 44, 45, 47, and 48
38			DIMMs 1, 2, 3, 4, 5, 6, 8, 9, 11, 12, 13, 14, 15, 16, 17, 18, 20, 21, 23, 24, 25, 26, 28, 29, 31, 32, 33, 35, 36, 37, 38, 40, 41, 43, 44, 45, 47, and 48

Table 12. DIMM population sequence for independent-channel mode (continued)

Number of DIMMs installed	1 microprocessor installed	2 microprocessors installed	4 microprocessors installed
39			DIMMs 1, 2, 3, 4, 5, 6, 8, 9, 11, 12, 13, 14, 15, 16, 17, 18, 20, 21, 23, 24, 25, 26, 28, 29, 31, 32, 33, 34, 35, 36, 37, 38, 40, 41, 43, 44, 45, 47, and 48
40			DIMMs 1, 2, 3, 4, 5, 6, 8, 9, 11, 12, 13, 14, 15, 16, 17, 18, 20, 21, 23, 24, 25, 26, 28, 29, 31, 32, 33, 34, 35, 36, 37, 38, 40, 41, 43, 44, 45, 46, 47, and 48
41			DIMMs 1, 2, 3, 4, 5, 6, 7, 8, 9, 11, 12, 13, 14, 15, 16, 17, 18, 20, 21, 23, 24, 25, 26, 28, 29, 31, 32, 33, 34, 35, 36, 37, 38, 40, 41, 43, 44, 45, 46, 47, and 48
42			DIMMs 1, 2, 3, 4, 5, 6, 7, 8, 9, 11, 12, 13, 14, 15, 16, 17, 18, 19, 20, 21, 23, 24, 25, 26, 28, 29, 31, 32, 33, 34, 35, 36, 37, 38, 40, 41, 43, 44, 45, 46, 47, and 48
43			DIMMs 1, 2, 3, 4, 5, 6, 7, 8, 9, 11, 12, 13, 14, 15, 16, 17, 18, 19, 20, 21, 23, 24, 25, 26, 28, 29, 30, 31, 32, 33, 34, 35, 36, 37, 38, 40, 41, 43, 44, 45, 46, 47, and 48
44			DIMMs 1, 2, 3, 4, 5, 6, 7, 8, 9, 11, 12, 13, 14, 15, 16, 17, 18, 19, 20, 21, 23, 24, 25, 26, 28, 29, 30, 31, 32, 33, 34, 35, 36, 37, 38, 40, 41, 42, 43, 44, 45, 46, 47, and 48
45			DIMMs 1, 2, 3, 4, 5, 6, 7, 8, 9, 10, 11, 12, 13, 14, 15, 16, 17, 18, 19, 20, 21, 23, 24, 25, 26, 28, 29, 30, 31, 32, 33, 34, 35, 36, 37, 38, 40, 41, 42, 43, 44, 45, 46, 47, and 48

Table 12. DIMM population sequence for independent-channel mode (continued)

Number of DIMMs installed	1 microprocessor installed	2 microprocessors installed	4 microprocessors installed
46			DIMMs 1, 2, 3, 4, 5, 6, 7, 8, 9, 10, 11, 12, 13, 14, 15, 16, 17, 18, 19, 20, 21, 22, 23, 24, 25, 26, 28, 29, 30, 31, 32, 33, 34, 35, 36, 37, 38, 40, 41, 42, 43, 44, 45, 46, 47, and 48
47			DIMMs 1, 2, 3, 4, 5, 6, 7, 8, 9, 10, 11, 12, 13, 14, 15, 16, 17, 18, 19, 20, 21, 22, 23, 24, 25, 26, 27, 28, 29, 30, 31, 32, 33, 34, 35, 36, 37, 38, 40, 41, 42, 43, 44, 45, 46, 47, and 48
48			DIMMs 1, 2, 3, 4, 5, 6, 7, 8, 9, 10, 11, 12, 13, 14, 15, 16, 17, 18, 19, 20, 21, 22, 23, 24, 25, 26, 27, 28, 29, 30, 31, 32, 33, 34, 35, 36, 37, 38, 39, 40, 41, 42, 43, 44, 45, 46, 47, and 48

Install DIMMs in the order that is indicated in the following table for mirrored-channel mode.

Table 13. DIMM population sequence for mirrored-channel mode

Number of DIMM pairs installed	1 microprocessor installed	2 microprocessor installed	4 microprocessor installed
1	DIMMs 1 and 4[1]	DIMMs 1 and 4[1]	DIMMs 1 and 4[1]
2	DIMMs 1 and 4, 9 and 12[1]	DIMMs 1 and 4, 13 and 16[1]	DIMMs 1 and 4, 13 and 16[1]
3	DIMMs 1 and 4, 9 and 12, 2 and 5[1]	DIMMs 1 and 4, 13 and 16, 9 and 12[1]	DIMMs 1 and 4, 13 and 16, 33 and 36[1]
4	DIMMs 1 and 4, 9 and 12, 2 and 5, 8 and 11[1]	DIMMs 1 and 4, 13 and 16, 9 and 12, 21 and 24[1]	DIMMs 1 and 4, 13 and 16, 33 and 36, 45 and 48[1]
5	DIMMs 1 and 4, 9 and 12, 2 and 5, 8 and 11, 3 and 6[1]	DIMMs 1 and 4, 13 and 16, 9 and 12, 21 and 24, 2 and 5[1]	DIMMs 1 and 4, 13 and 16, 33 and 36, 45 and 48, 9 and 12[1]
6	DIMMs 1 and 4, 9 and 12, 2 and 5, 8 and 11, 3 and 6, 7 and 10[1]	DIMMs 1 and 4, 13 and 16, 9 and 12, 21 and 24, 2 and 5, and 14 and 17[1]	DIMMs 1 and 4, 13 and 16, 33 and 36, 45 and 48, 9 and 12, 21 and 24[1]
7		DIMMs 1 and 4, 13 and 16, 9 and 12, 21 and 24, 2 and 5, and 14 and 17, 8 and 11[1]	DIMMs 1 and 4, 13 and 16, 33 and 36, 45 and 48, 9 and 12, 21 and 24, 25 and 28[1]

Table 13. DIMM population sequence for mirrored-channel mode (continued)

Number of DIMM pairs installed	1 microprocessor installed	2 microprocessor installed	4 microprocessor installed
8		DIMMs 1 and 4, 13 and 16, 9 and 12, 21 and 24, 2 and 5, and 14 and 17, 8 and 11, 20 and 23[1]	DIMMs 1 and 4, 13 and 16, 33 and 36, 45 and 48, 9 and 12, 21 and 24, 25 and 28, 37 and 40[1]
9		DIMMs 1 and 4, 13 and 16, 9 and 12, 21 and 24, 2 and 5, and 14 and 17, 8 and 11, 20 and 23, 3 and 6[1]	DIMMs 1 and 4, 13 and 16, 33 and 36, 45 and 48, 9 and 12, 21 and 24, 25 and 28, 37 and 40, 2 and 5[1]
10		DIMMs 1 and 4, 13 and 16, 9 and 12, 21 and 24, 2 and 5, and 14 and 17, 8 and 11, 20 and 23, 3 and 6, 15 and 18[1]	DIMMs 1 and 4, 13 and 16, 33 and 36, 45 and 48, 9 and 12, 21 and 24, 25 and 28, 37 and 40, 2 and 5, 14 and 17[1]
11		DIMMs 1 and 4, 13 and 16, 9 and 12, 21 and 24, 2 and 5, and 14 and 17, 8 and 11, 20 and 23, 3 and 6, 15 and 18, 7 and 10[1]	DIMMs 1 and 4, 13 and 16, 33 and 36, 45 and 48, 9 and 12, 21 and 24, 25 and 28, 37 and 40, 2 and 5, 14 and 17, 32 and 35[1]
12		DIMMs 1 and 4, 13 and 16, 9 and 12, 21 and 24, 2 and 5, and 14 and 17, 8 and 11, 20 and 23, 3 and 6, 15 and 18, 7 and 10, 19 and 22[1]	DIMMs 1 and 4, 13 and 16, 33 and 36, 45 and 48, 9 and 12, 21 and 24, 25 and 28, 37 and 40, 2 and 5, 14 and 17, 32 and 35, 44 and 47[1]
13			DIMMs 1 and 4, 13 and 16, 33 and 36, 45 and 48, 9 and 12, 21 and 24, 25 and 28, 37 and 40, 2 and 5, 14 and 17, 32 and 35, 44 and 47, 8 and 11[1]
14			DIMMs 1 and 4, 13 and 16, 33 and 36, 45 and 48, 9 and 12, 21 and 24, 25 and 28, 37 and 40, 2 and 5, 14 and 17, 32 and 35, 44 and 47, 8 and 11, 20 and 23[1]
15			DIMMs 1 and 4, 13 and 16, 33 and 36, 45 and 48, 9 and 12, 21 and 24, 25 and 28, 37 and 40, 2 and 5, 14 and 17, 32 and 35, 44 and 47, 8 and 11, 20 and 23, 26 and 29[1]

Table 13. DIMM population sequence for mirrored-channel mode (continued)

Number of DIMM pairs installed	1 microprocessor installed	2 microprocessor installed	4 microprocessor installed
16			DIMMs 1 and 4, 13 and 16, 33 and 36, 45 and 48, 9 and 12, 21 and 24, 25 and 28, 37 and 40, 2 and 5, 14 and 17, 32 and 35, 44 and 47, 8 and 11, 20 and 23, 26 and 29, 38 and 41[1]
17			DIMMs 1 and 4, 13 and 16, 33 and 36, 45 and 48, 9 and 12, 21 and 24, 25 and 28, 37 and 40, 2 and 5, 14 and 17, 32 and 35, 44 and 47, 8 and 11, 20 and 23, 26 and 29, 38 and 41, 3 and 6[1]
18			DIMMs 1 and 4, 13 and 16, 33 and 36, 45 and 48, 9 and 12, 21 and 24, 25 and 28, 37 and 40, 2 and 5, 14 and 17, 32 and 35, 44 and 47, 8 and 11, 20 and 23, 26 and 29, 38 and 41, 3 and 6, 15 and 18[1]

1. For mirrored-channel mode, the DIMM pair must be identical in size, type, and rank count.

Procedure

To install a DIMM, complete the following steps:

1. Remove the cover (see "Removing the compute node cover" on page 498).
2. Read the documentation that comes with the DIMM.
3. Remove the air baffle installed over the DIMM connector.

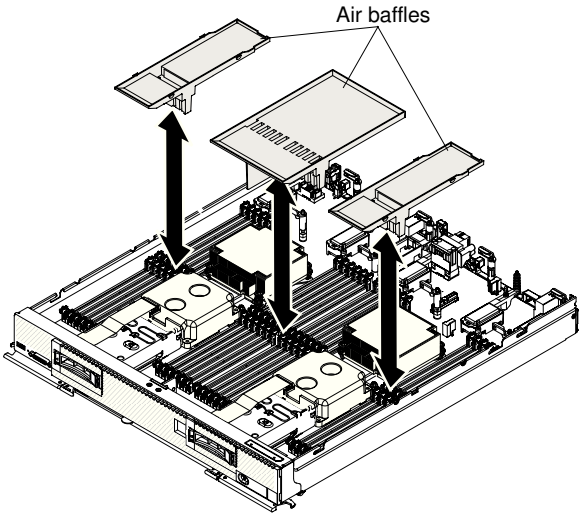

4. Locate the DIMM connectors (see "System-board connectors" on page 16). Determine which DIMM connector you want to install the DIMM in.
5. Touch the static-protective package that contains the DIMM to any *unpainted* metal surface on the IBM Flex System chassis or any *unpainted* metal surface on any other grounded rack component in the rack in which you are installing the DIMM for at least 2 seconds; then, remove the DIMM from its package.

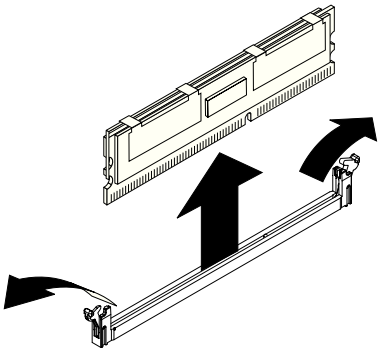

6. Make sure that both retaining clips on the DIMM connector are in the open position.
7. Turn the DIMM so that the DIMM keys align correctly with the DIMM connector on the system board.

   Attention: To avoid breaking the retaining clips or damaging the DIMM connector, handle the clips gently.
8. Press the DIMM into the DIMM connector. The retaining clips lock the DIMM into the connector.
9. Make sure that the small tabs on the retaining clips engage the notches on the DIMM. If there is a gap between the DIMM and the retaining clips, the DIMM has not been correctly installed. Press the DIMM firmly into the connector, and then press the retaining clips toward the DIMM until the tabs are fully seated. When the DIMM is correctly installed, the retaining clips are parallel to the sides of the DIMM.

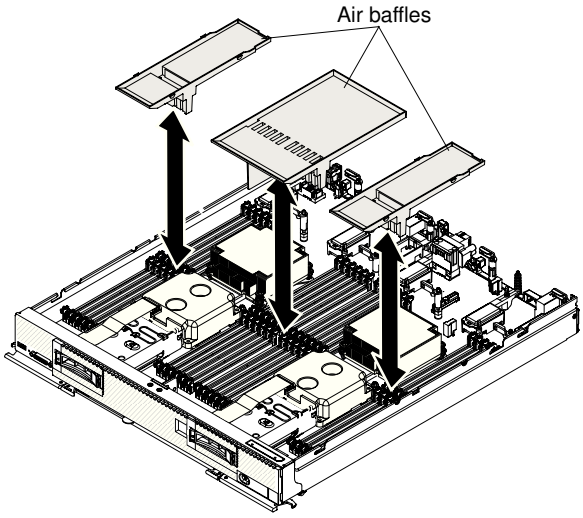

10. Install the air baffle over the DIMM connector.

    Attention:

    - Install the air baffles with the arrow indicating air flow direction pointing to the rear of the compute node.
    - To maintain proper system cooling, do not operate the compute node without air baffles installed over the DIMM connectors.

What to do next

After you install the DIMM, complete the following steps:

1. Install the cover onto the compute node (see "Installing the compute node cover" on page 500 for instructions).
2. Install the compute node into the chassis (see "Installing a compute node in a chassis" on page 490 for instructions).

Removing the front handle

Use this information to remove the front handle.

Before you begin

Before you remove the front handles, complete the following steps:

1. Read "Safety" on page v and "Installation guidelines" on page 487.
2. If the compute node is installed in an IBM Flex System chassis, remove it (see "Removing a compute node from a chassis" on page 489 for instructions).
3. Carefully lay the compute node on a flat, static-protective surface with the cover side down, orienting the compute node with the bezel pointing toward you.

Procedure

To remove the front handles, complete the following steps.

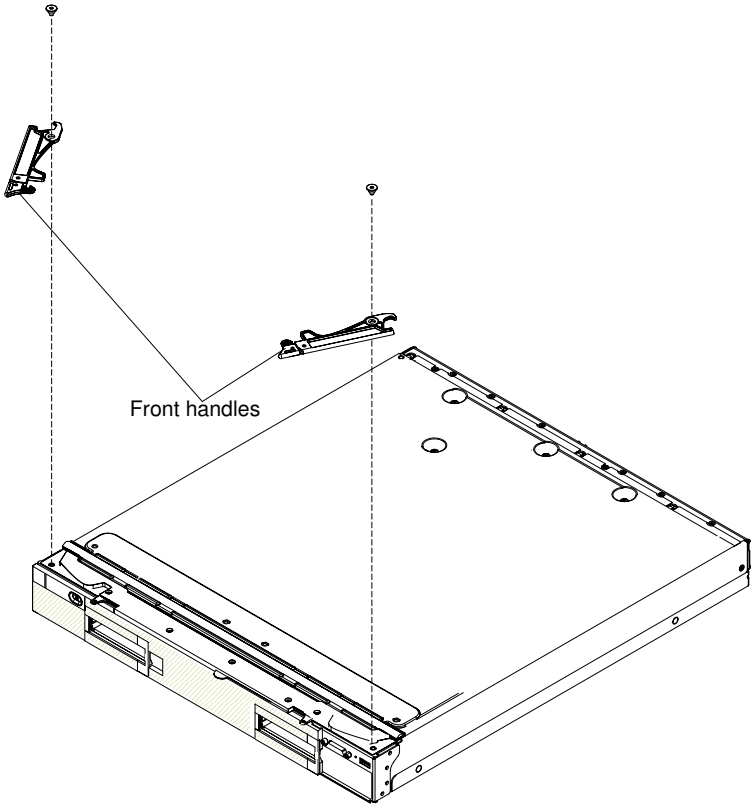

1. Locate the screws that attache the handles to the compute node.
2. Using a T8 Torx screwdriver, remove the screw from each front handle and save the screw in a safe place. Use the same screws when you install the front handles.

What to do next

If you are instructed to return the front handles, follow all packaging instructions, and use any packaging materials for shipping that are supplied to you.

Installing the front handles

Use this information to install the front handle.

Before you begin

Before you install the front handles, complete the following steps:

1. Read “Safety” on page v and “Installation guidelines” on page 487.
2. If the compute node is installed in an IBM Flex System chassis, remove it (see “Removing a compute node from a chassis” on page 489 for instructions).
3. Carefully lay the compute node on a flat, static-protective surface with the cover side down, orienting the compute node with the bezel pointing toward you.

Procedure

To install the front handles, complete the following steps.

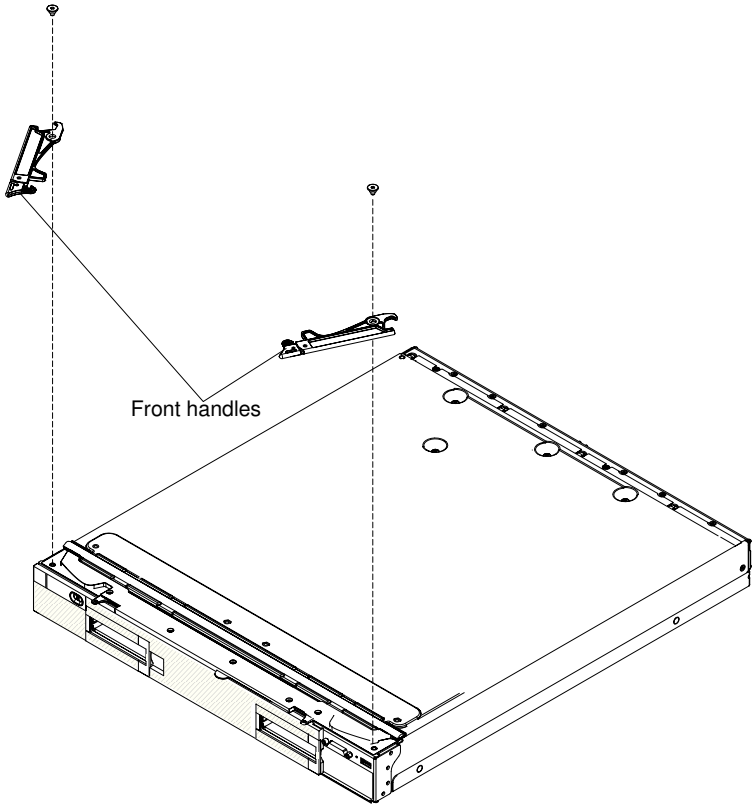

1. Orient the front handles so that the blue release latches are toward the middle of the compute node.
2. Align the hole in the handles with the holes on the compute node where the handles are installed.
3. Using a T8 Torx screwdriver, install the screw that secures each handle. Use the screws that you removed when you removed the handles.

What to do next

After you install the front handles, install the compute node into the chassis (see "Installing a compute node in a chassis" on page 490 for instructions).

Removing the hard disk drive backplane

Use this information to remove the hard disk drive backplane.

Before you begin

Note: This procedure should be performed only by trained service technicians.

Before you remove the hard disk drive backplane, complete the following steps:

1. Read "Safety" on page v and "Installation guidelines" on page 487.
2. If the compute node is installed in an IBM Flex System chassis, remove it (see "Removing a compute node from a chassis" on page 489 for instructions).
3. Carefully lay the compute node on a flat, static-protective surface, orienting the compute node with the bezel pointing toward you.

Procedure

To remove the hard disk drive backplane, complete the following steps.

1. Remove the cover (see “Removing the compute node cover” on page 498).
2. For the hard disk drive backplane that you have to replace, disconnect the applicable hard disk drive by pressing the release latch (orange) on the hard disk drive to release the drive handle; then, use the drive handle to slide the hard disk drive approximately 12 mm (0.5 in.) out of the bay. See “Removing a hot-swap hard disk drive” on page 522).
3. To disconnect the cable from the hard disk drive backplane that you removed, pull the connector clip away from the cable to unhook the clip from the backplane as you push the cable connector toward the rear of the compute node **1**.

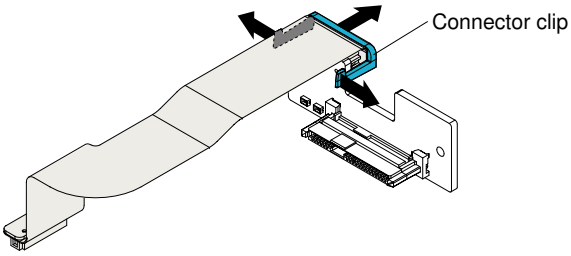

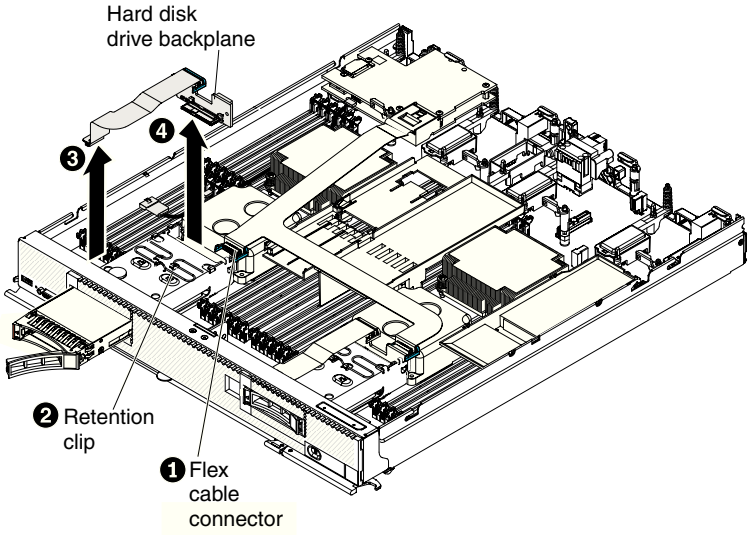

4. Push the retention clip on the hard disk drive cage toward the rear of the compute node to release it from under the tab; then, slide the retention clip toward the front of the compute node to release the hard disk drive backplane **2**.
5. Disconnect the hard disk drive backplane cable from the system board **3**.
6. Lift out the hard disk drive backplane and cable. It might be necessary to pull the backplane toward the front of the compute node before you lift it out of the compute node **4**.

What to do next

If you are instructed to return the hard disk drive backplane, follow all packaging instructions, and use any packaging materials for shipping that are supplied to you.

Installing the hard disk drive backplane

Use this information to install the hard disk drive backplane.

Before you begin

Note: This procedure should be performed only by trained service technicians.

Before you install the hard disk drive backplane, complete the following steps:

1. Read "Safety" on page v and "Installation guidelines" on page 487.
2. If the compute node is installed in an IBM Flex System chassis, remove it (see "Removing a compute node from a chassis" on page 489 for instructions).
3. Carefully lay the compute node on a flat, static-protective surface, orienting the compute node with the bezel pointing toward you.

Procedure

To install the hard disk drive backplane, complete the following steps.

1. Remove the cover (see "Removing the compute node cover" on page 498).
2. To connect the backplane cable to the new hard disk drive backplane, hold open the connector clip while you push the cable connector into the backplane cable connector. Make sure that the connector clip clicks into place around the backplane.

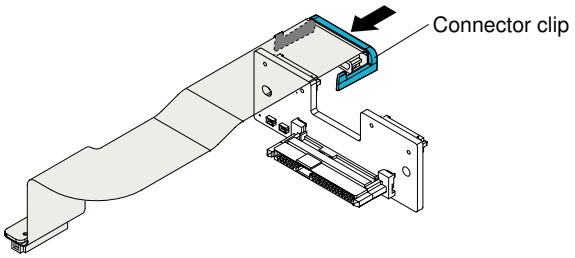

Note: Pull the retention clip forward when you install the backplane.

3. Align the new hard disk drive backplane with the hard disk drive cage and the connector on the system board and press the backplane into position until it is fully seated in the connector **1** .

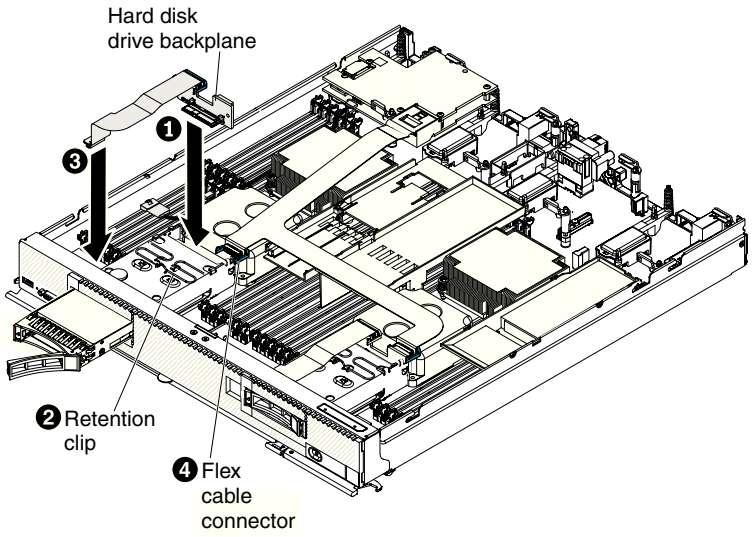

4. Push the retention clip on the hard disk drive cage toward the rear of the compute node and under the tab to secure the backplane **2** .
5. Connect the hard disk drive backplane cable to the system board **3**
6. Connect the flex cable to the hard disk drive backplane connector.
7. Reconnect the hard disk drive by sliding it fully into the bay and closing the drive tray handle, see "Installing a hot-swap hard disk drive" on page 523
8. Install the cover onto the compute node (see "Installing the compute node cover" on page 500 for instructions).
9. Install the compute node into the chassis (see "Installing a compute node in a chassis" on page 490 for instructions).

What to do next

After you install the hard disk drive backplane, complete the following steps:

1. Install the cover onto the compute node (see "Installing the compute node cover" on page 500 for instructions).
2. Install the compute node into the chassis (see "Installing a compute node in a chassis" on page 490 for instructions).

Removing a hot-swap hard disk drive

Use this information to remove a hot-swap hard disk drive.

Before you begin

Before you remove a hot-swap hard disk drive, complete the following steps:

1. Back up all important data before you make changes to hard disk drives.
2. Read "Safety" on page v and "Installation guidelines" on page 487.

Procedure

The compute node has two hard disk drive bays for installing or removing hot-swap hard disk devices. To remove a hot-swap hard disk drive, complete the following steps.

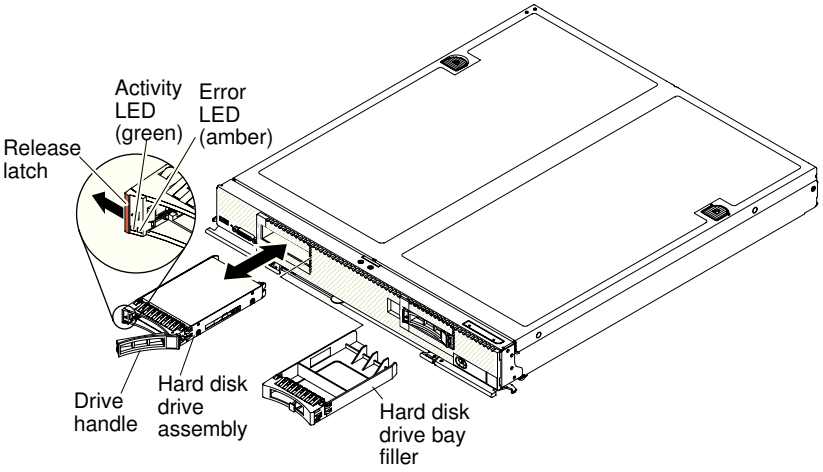

1. Press the release latch (orange) on the hard disk drive to release the drive handle.
2. Pull the release handle to remove the drive from the bay.

What to do next

If you are instructed to return the hard disk drive, follow all packaging instructions, and use any packaging materials for shipping that are supplied to you.

Installing a hot-swap hard disk drive

Use this information to install a hot-swap hard disk drive.

Before you begin

Before you install the hot-swap hard disk drive, read "Safety" on page v and "Installation guidelines" on page 487.

About this task

The compute node has two SAS or SATA hard disk drive bays for installing hot-swap hard disk drives, such as hot-swap SAS hard disk drives. One hard disk drive might already be installed in the compute node in hard disk drive bay 0. If the compute node is equipped with one hard disk drive, you can install an additional drive in hard disk drive bay 1. The compute node supports using RAID 0 or RAID 1 when two hard disk drives of the same interface type are installed. See "Configuring a RAID array" on page 35 for information about RAID configuration.

To install a hot-swap hard disk drive or hard disk drive bay filler, complete the following steps.

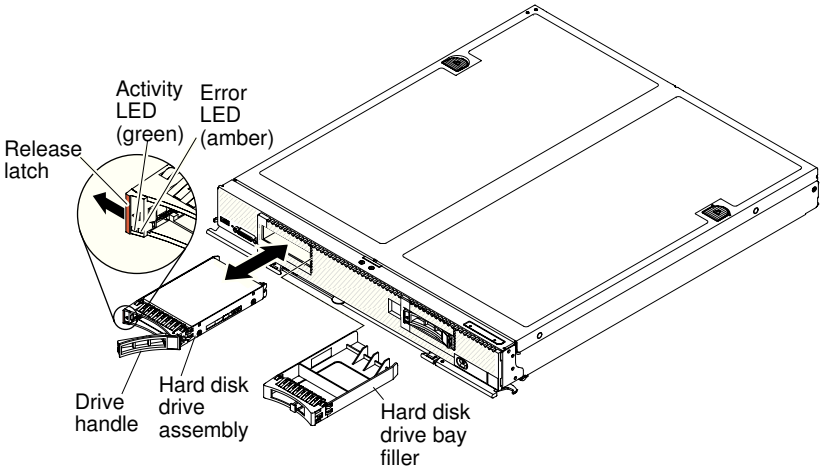

Procedure

1. Identify the hard disk drive bay (hard disk drive bay 0 or hard disk drive bay 1) in which you plan to install the hot-swap hard disk drive.
2. If a hard disk drive bay filler is installed, remove it from the compute node by pulling the release lever and sliding the filler away from the compute node.
3. Touch the static-protective package that contains the hot-swap hard disk drive to any *unpainted* metal surface on the IBM Flex System chassis or any *unpainted* metal surface on any other grounded rack component; then, remove the hard disk drive from the package.

4. Open the release lever on the hot-swap hard disk drive and slide the drive into the bay until it is firmly seated in the connector.
5. Lock the hot-swap hard disk drive into place by closing the release lever.
6. Check the hard disk drive status LEDs to make sure that the hard disk drive is operating correctly.

What to do next

See "Configuring a RAID array" on page 35 for information about SAS RAID configuration.

Removing an I/O expansion adapter

Use this information to remove an I/O expansion adapter.

Before you begin

Before you remove the I/O expansion adapter, complete the following steps:

1. Read "Safety" on page v and "Installation guidelines" on page 487.
2. If the compute node is installed in an IBM Flex System chassis, remove it (see "Removing a compute node from a chassis" on page 489 for instructions).
3. Carefully lay the compute node on a flat, static-protective surface, orienting the compute node with the bezel pointing toward you.

Procedure

To remove an I/O expansion adapter, complete the following steps.

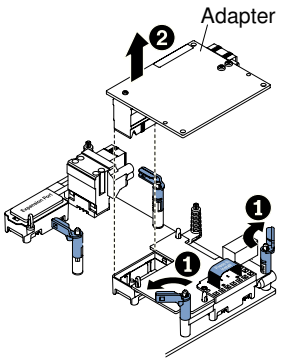

1. Remove the cover (see "Removing the compute node cover" on page 498).
2. Locate the I/O expansion adapter connectors (see "System-board layouts" on page 16).
3. Open the retention clips **1**.
4. Lift the I/O expansion adapter from the connector and remove the I/O expansion adapter from the compute node **2**. You might find it helpful to rock the adapter back and forth to disengage the adapter.

What to do next

If you are instructed to return the I/O expansion adapter, follow all packaging instructions, and use any packaging materials for shipping that are supplied to you.

Installing an I/O expansion adapter

Use this information to install an I/O expansion adapter.

Before you begin

Before you install an I/O expansion adapter, complete the following steps:

1. Read “Safety” on page v and “Installation guidelines” on page 487.
2. If the compute node is installed in an IBM Flex System chassis, remove it (see “Removing a compute node from a chassis” on page 489 for instructions).
3. Carefully lay the compute node on a flat, static-protective surface, orienting the compute node with the bezel pointing toward you.

About this task

This component can be installed as an optional device or as a CRU. The installation procedure is the same for the optional device and the CRU.

Procedure

To install an I/O expansion adapter, complete the following steps.

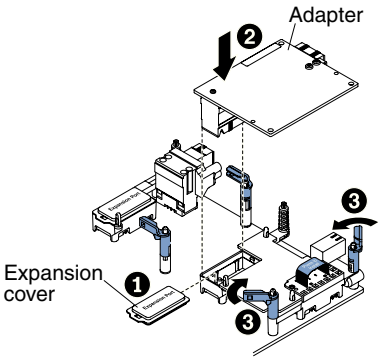

1. Remove the cover (see “Removing the compute node cover” on page 498).
2. Locate the I/O expansion connectors (see “System-board connectors” on page 16).
3. Remove the expansion cover **1** from the connector, if one is present.
4. Touch the static-protective package that contains the adapter to any *unpainted* metal surface on the IBM Flex System chassis or any *unpainted* metal surface on any other grounded rack component; then, remove the adapter from the package.
5. Open the retention clips if they are closed.
6. Orient the connector on the expansion adapter with the I/O expansion connector and alignment pins on the system board **2**; then, press the adapter into the I/O expansion connector.
7. Firmly press on the indicated locations to seat the expansion adapter in the connector and over the alignment pins.
8. Close the retention clips **3**.

What to do next

After you install the I/O expansion adapter, complete the following steps:

1. Install the cover onto the compute node (see “Installing the compute node cover” on page 500 for instructions).
2. Install the compute node into the chassis (see “Installing a compute node in a chassis” on page 490 for instructions).
3. See the documentation that comes with the expansion adapter for device-driver and configuration information to complete the installation.

Removing the light path diagnostics panel

Use this information to remove the light path diagnostics panel.

Before you begin

Before you remove the light path diagnostics panel, complete the following steps:

1. Read “Safety” on page v and “Installation guidelines” on page 487.
2. If the compute node is installed in an IBM Flex System chassis, remove it (see “Removing a compute node from a chassis” on page 489 for instructions).
3. Carefully lay the compute node on a flat, static-protective surface, orienting the compute node with the bezel pointing toward you.

Procedure

To remove the light path diagnostics panel, complete the following steps.

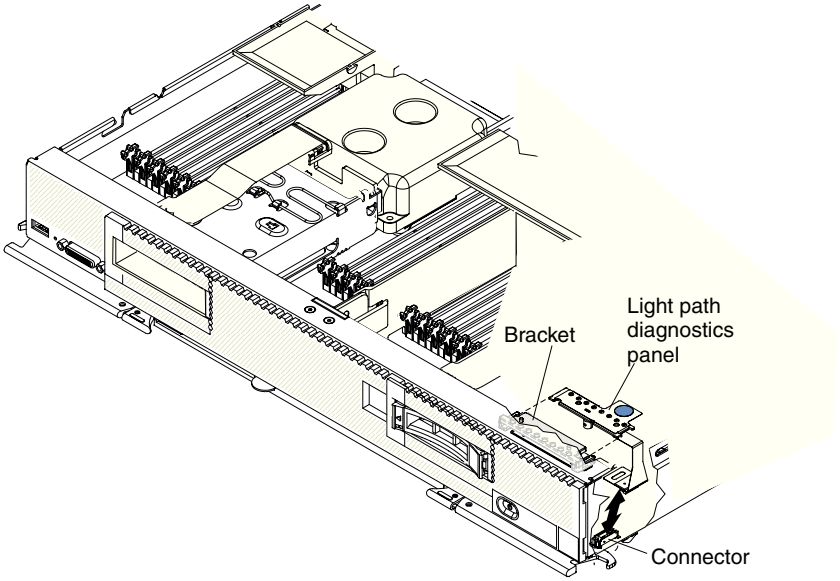

1. Remove the cover (see “Removing the compute node cover” on page 498).
2. Pull the light path diagnostics panel out of the bracket.
3. Disconnect the cable from the system board.
4. Lift the light path diagnostics panel from the compute node.

What to do next

If you are instructed to return the light path diagnostics panel, follow all packaging instructions, and use any packaging materials for shipping that are supplied to you.

Installing the light path diagnostics panel

Use this information to install the light path diagnostics panel.

Before you begin

Before you install the light path diagnostics panel, complete the following steps:

1. Read "Safety" on page v and "Installation guidelines" on page 487.
2. If the compute node is installed in an IBM Flex System chassis, remove it (see "Removing a compute node from a chassis" on page 489 for instructions).
3. Carefully lay the compute node on a flat, static-protective surface, orienting the compute node with the bezel pointing toward you.

Procedure

To install a light path diagnostics panel, complete the following steps.

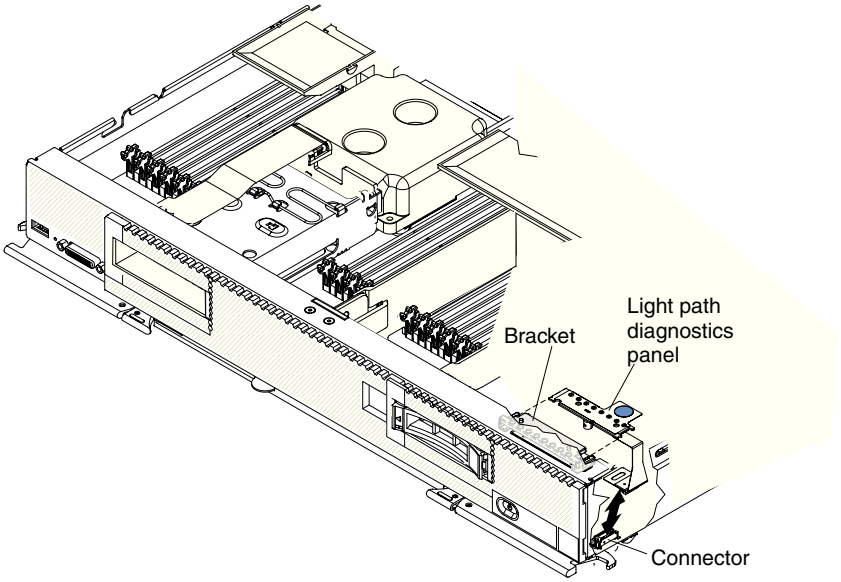

1. Remove the cover (see "Removing the compute node cover" on page 498).
2. Connect the cable on the system board.
3. Align the light path diagnostics panel with the bracket.
4. Press the light path diagnostics panel securely in the bracket.

What to do next

After you install the light path diagnostics panel, complete the following steps:

1. Install the cover onto the compute node (see "Installing the compute node cover" on page 500 for instructions).
2. Install the compute node into the chassis (see "Installing a compute node in a chassis" on page 490 for instructions).

Removing the USB flash drive

Use this information to remove the USB flash drive.

Before you begin

Before you remove the USB flash drive, complete the following steps:

1. Read “Safety” on page v and “Installation guidelines” on page 487.
2. If the compute node is installed in an IBM Flex System chassis, remove it (see “Removing a compute node from a chassis” on page 489 for instructions).
3. Carefully lay the compute node on a flat, static-protective surface, orienting the compute node with the bezel pointing away form you.

Procedure

To remove the USB flash drive, complete the following steps.

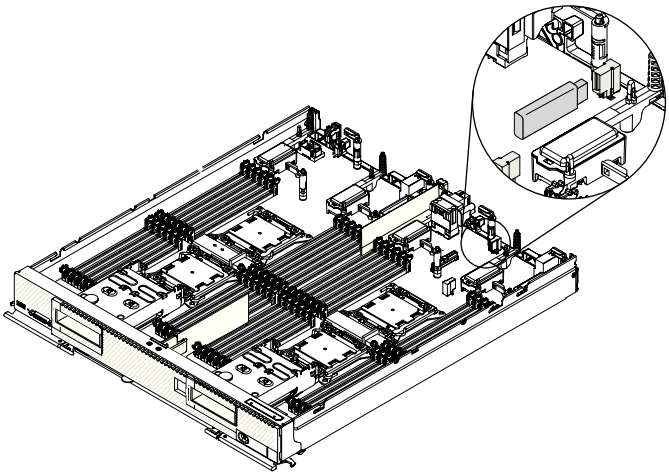

1. Remove the cover (see “Removing the compute node cover” on page 498).
2. Locate the USB connectors on the system.

   Note: You might have to remove an I/O expansion adapter to be removed to remove the USB flash drive.
3. Pull the USB flash drive out of the connector.

What to do next

If you are instructed to return the USB flash drive, follow all packaging instructions, and use any packaging materials for shipping that are supplied to you.

Installing the USB flash drive

Use this information to install the USB flash drive.

Before you begin

Before you install the USB flash drive, complete the following steps:

1. Read “Safety” on page v and “Installation guidelines” on page 487.
2. If the compute node is installed in an IBM Flex System chassis, remove it (see “Removing a compute node from a chassis” on page 489 for instructions).
3. Carefully lay the compute node on a flat, static-protective surface, orienting the compute node with the bezel pointing toward you.

About this task

This component can be installed as an optional device or as a CRU. The installation procedure is the same for the optional device and the CRU.

Procedure

To install the USB flash drive, complete the following steps.

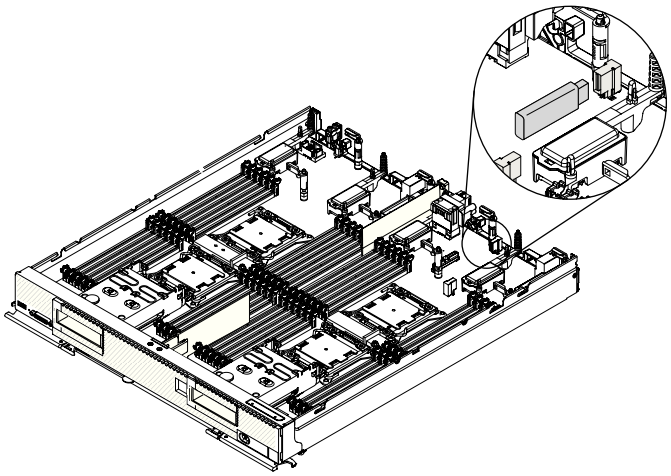

1. Remove the cover (see "Removing the compute node cover" on page 498).
2. Locate the USB connectors on the system board.

   Note: You might have to remove an I/O expansion adapter remove the USB flash drive.
3. Push the USB flash drive into the connector.

What to do next

After you install the USB flash drive, complete the following steps:

1. Install the cover onto the compute node (see "Installing the compute node cover" on page 500 for instructions).
2. Install the compute node into the chassis (see "Installing a compute node in a chassis" on page 490 for instructions).

Removing and replacing Tier 2 customer replaceable units (CRUs)

Use this information for removing and replacing Tier 2 CRUs.

About this task

You may install a Tier 2 CRU yourself or request IBM to install it, at no additional charge, under the type of warranty service that is designated for the compute node. A Tier 2 CRU must be installed only by trained service technicians.

Removing the base assembly

Use this information to remove the system-board assembly.

Before you begin

Notes:

1. This procedure should be performed only by trained service technicians.
2. The base assembly includes the chassis and system board.

Before you remove the base assembly, complete the following steps:

1. Read "Safety" on page v and "Installation guidelines" on page 487.
2. If the compute node is installed in an IBM Flex System chassis, remove it (see "Removing a compute node from a chassis" on page 489 for instructions).
3. Carefully lay the compute node on a flat, static-protective surface, orienting the compute node with the bezel pointing toward you.
4. Obtain the following items for use during the replacement procedure (see Chapter 5, "Parts listing, Types 7917 and 2584," on page 51):
   - Alcohol wipes
   - Bezel
   - Thermal grease

About this task

Important: When you replace the base assembly, you must update the compute node with the latest firmware or restore the preexisting firmware. Make sure that you have the latest firmware or a copy of the preexisting firmware before you proceed. See "Updating firmware and device drivers" on page 23 for more information.

See "System-board layouts" on page 16 for more information about the locations of the connectors, jumpers, and LEDs on the system board.

Procedure

To remove the components from the system board, complete the following steps:

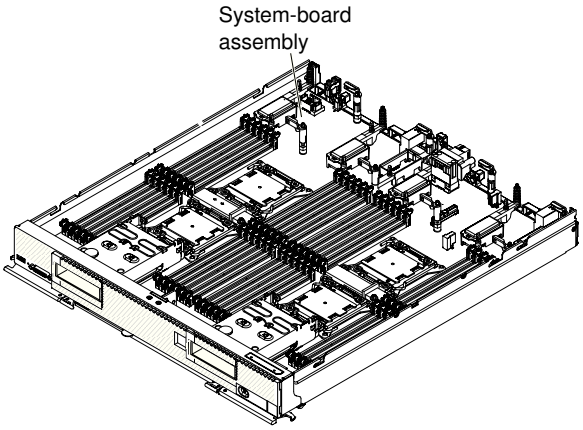

1. Remove the cover (see "Removing the compute node cover" on page 498).
2. Remove all of the installed components in the following list from the system-board assembly; then, place them on a static-protective surface or install them on the new system-board assembly.
   - DIMMs and air baffles (see "Removing a DIMM" on page 501).
   - I/O expansion adapters (see "Removing an I/O expansion adapter" on page 524).

- Hard disk drives and hard disk drive bay fillers (see “Removing a hot-swap hard disk drive” on page 522).
- Microprocessors, heat sinks, and microprocessor heat sink fillers. Use the microprocessor installation tool that comes with the CRU kit to remove each microprocessor from the system-board assembly and install each one immediately in the new system-board assembly (see “Removing a microprocessor and heat sink” on page 539 and “Installing a microprocessor and heat sink” on page 542).
- Hard disk drive backplane (see “Removing the hard disk drive backplane” on page 519).

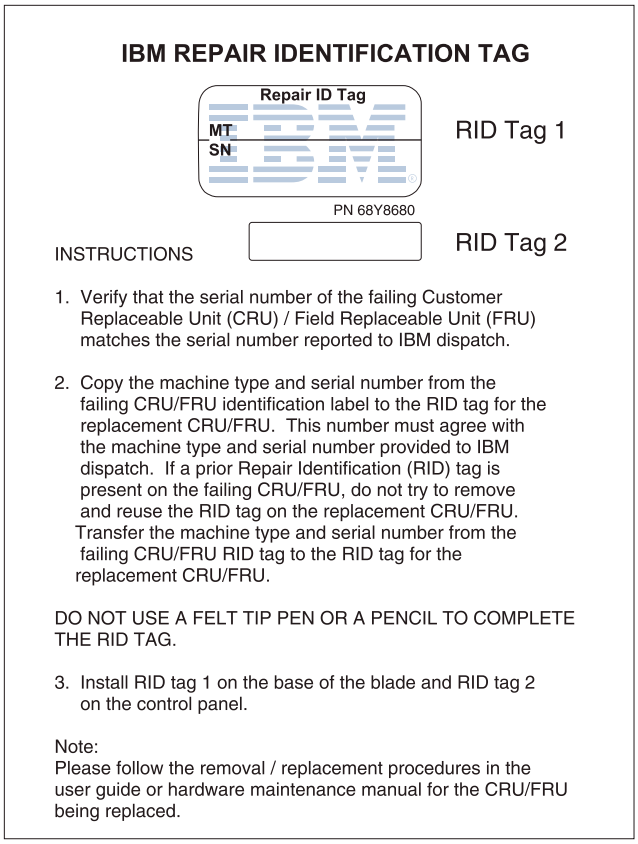
IBM REPAIR IDENTIFICATION TAG

Repair ID Tag
MT
SN
RID Tag 1

PN 68Y8680

INSTRUCTIONS

RID Tag 2

1. Verify that the serial number of the failing Customer Replaceable Unit (CRU) / Field Replaceable Unit (FRU) matches the serial number reported to IBM dispatch.

2. Copy the machine type and serial number from the failing CRU/FRU identification label to the RID tag for the replacement CRU/FRU. This number must agree with the machine type and serial number provided to IBM dispatch. If a prior Repair Identification (RID) tag is present on the failing CRU/FRU, do not try to remove and reuse the RID tag on the replacement CRU/FRU. Transfer the machine type and serial number from the failing CRU/FRU RID tag to the RID tag for the replacement CRU/FRU.

DO NOT USE A FELT TIP PEN OR A PENCIL TO COMPLETE THE RID TAG.

3. Install RID tag 1 on the base of the blade and RID tag 2 on the control panel.

Note:
Please follow the removal / replacement procedures in the user guide or hardware maintenance manual for the CRU/FRU being replaced.

3. The new base assembly comes with an IBM Repair Identification (RID) tag on the system board. Using a ball point pen, transfer the machine type and serial number from the old system board to the two labels on the IBM Repair Identification (RID) tag that comes with the new system board; then, place label 1 (larger label) on the base of the system board and label 2 (smaller label) on the bottom side of the control panel.

What to do next

If you are instructed to return the base assembly, follow all packaging instructions, and use any packaging materials for shipping that are supplied to you.

Installing the base assembly

Use this information to install the base assembly.

Before you begin

1. This procedure should be performed only by trained service technicians.
2. The base assembly includes the chassis and system board.

Before you install the base assembly, complete the following steps:

1. Read "Safety" on page v and "Installation guidelines" on page 487.
2. If the compute node is installed in an IBM Flex System chassis, remove it (see "Removing a compute node from a chassis" on page 489 for instructions).
3. Carefully lay the compute node on a flat, static-protective surface, orienting the compute node with the bezel pointing toward you.
4. Obtain the following items for use during the replacement procedure (see Chapter 5, "Parts listing, Types 7917 and 2584," on page 51):
   - Alcohol wipes
   - Bezel
   - Thermal grease

About this task

Important: When you replace the base assembly, you must update the compute node with the latest firmware or restore the preexisting firmware. Make sure that you have the latest firmware or a copy of the preexisting firmware before you proceed. See "Updating firmware and device drivers" on page 23 for more information.

Procedure

To install the components on the system board of the new base assembly, complete the following steps.

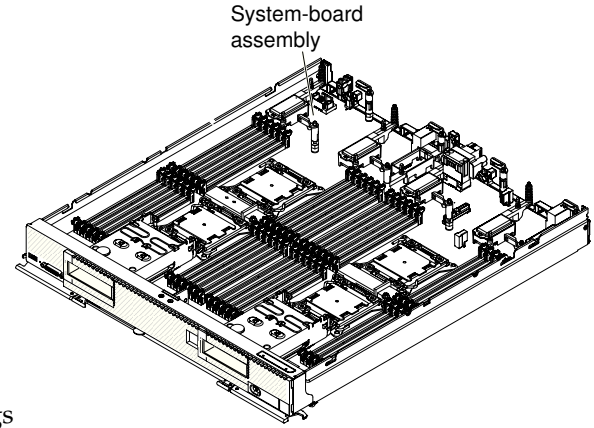

Earrings

1. Install all of the components in the following list that you removed from the old system board onto the new system board.
   - DIMMs and air baffles (see "Installing a DIMM" on page 502).
   - I/O expansion adapters (see "Installing an I/O expansion adapter" on page 525).
   - Hard disk drives and hard disk drive fillers (see "Installing a hot-swap hard disk drive" on page 523).
   - Microprocessors, heat sinks, and microprocessor heat sink fillers. Use the microprocessor installation tool that comes with the CRU kit to remove each microprocessor from the system board and install each one immediately in the new system board (see "Removing a microprocessor and heat sink" on page 539 and "Installing a microprocessor and heat sink" on page 542).

- Hard disk drive backplane (see “Installing the hard disk drive backplane” on page 521).

2. Install the bezel (see “Installing the bezel” on page 495).

What to do next

After you install the components on the system board of the new base assembly, complete the following steps:

1. Install the cover onto the compute node (see “Installing the compute node cover” on page 500 for instructions).
2. Install the compute node into the chassis (see “Installing a compute node in a chassis” on page 490 for instructions).
3. Update the Universal Unique Identifier (UUID). Use the Advanced Settings Utility to update the UUID in the UEFI-based compute node (see “Updating the Universally Unique Identifier and DMI/SMBIOS data” on page 32).
4. Update the compute node with the latest firmware or restore the preexisting firmware that the customer provides (see “Updating firmware and device drivers” on page 23 for more information).

Removing the chassis bulkhead

Use this information to remove the chassis bulkhead.

Before you begin

Note: This procedure should be performed only by trained service technicians.

Before you remove the chassis bulkhead, complete the following steps:

1. Read “Safety” on page v and “Installation guidelines” on page 487.
2. If the compute node is installed in an IBM Flex System chassis, remove it (see “Removing a compute node from a chassis” on page 489 for instructions).
3. Carefully lay the compute node on a flat, static-protective surface, orienting the compute node with the bezel pointing toward you.

Procedure

To remove the chassis bulkhead, complete the following steps.

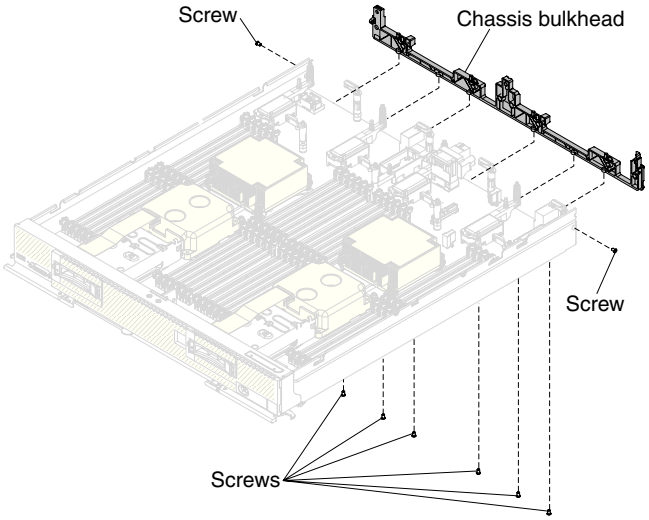

1. Remove the cover (see “Removing the compute node cover” on page 498).
2. Remove the fabric connector (see “Removing a fabric connector” on page 537).
3. Carefully place the chassis on its side with the front handle side up.

   Note: You might find it helpful to remove the air baffles.
4. Using a T8 Torx screwdriver, remove the screws that secure the bulkhead from the bottom of the chassis.
5. Carefully return the chassis to the bottom-side-down orientation.
6. Using a T8 Torx screwdriver, remove the screws that secure the bulkhead from the sides of the chassis.
7. Lift the chassis bulkhead from the chassis.

What to do next

If you are instructed to return the chassis bulkhead, follow all packaging instructions, and use any packaging materials for shipping that are supplied to you.

Installing the chassis bulkhead

Use this information to install the chassis bulkhead.

Before you begin

Note: This procedure should be performed only by trained service technicians.

Before you install the chassis bulkhead, complete the following steps:
1. Read “Safety” on page v and “Installation guidelines” on page 487.
2. If the compute node is installed in an IBM Flex System chassis, remove it (see “Removing a compute node from a chassis” on page 489 for instructions).
3. Carefully lay the compute node on a flat, static-protective surface, orienting the compute node with the bezel pointing toward you.

Procedure

To install the chassis bulkhead, complete the following steps.

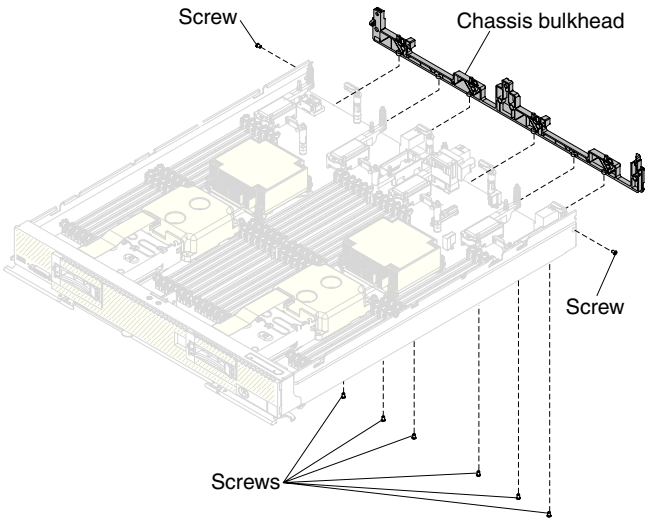

1. Remove the cover (see “Removing the compute node cover” on page 498).

2. Remove the fabric connector (see “Removing a fabric connector” on page 537).
3. Position the bulkhead in the chassis.
4. Using a T8 Torx screwdriver, install the screws that secure the bulkhead to the sides of the chassis.
5. Carefully place the chassis on its side with the front handle side up.
6. Using a T8 Torx screwdriver, install the screws that secure the bulkhead to the bottom of the chassis.
7. Carefully return the chassis to the bottom-side-down orientation.
8. Install the fabric connector (see “Installing a fabric connector” on page 538).
9. Install the air baffles, if you removed them.

   Attention: Install the air baffles with the arrow indicating air airflow direction pointing to the rear of the compute node.

   Attention: To maintain proper system cooling, do not operate the compute node without air baffles installed over the DIMM connectors.

What to do next

After you install the chassis bulkhead, complete the following steps:

1. Install the cover onto the compute node (see “Installing the compute node cover” on page 500 for instructions).
2. Install the compute node into the chassis (see “Installing a compute node in a chassis” on page 490 for instructions).

Removing the hard disk drive cage

Use this information to remove the hard disk drive cage.

Before you begin

Note: This procedure should be performed only by trained service technicians.

Before you remove the hard disk drive cage, complete the following steps:

1. Read “Safety” on page v and “Installation guidelines” on page 487.
2. If the compute node is installed in an IBM Flex System chassis, remove it (see “Removing a compute node from a chassis” on page 489 for instructions).
3. Carefully lay the compute node on a flat, static-protective surface, orienting the compute node with the bezel pointing toward you.

Procedure

To remove the hard disk drive cage, complete the following steps.

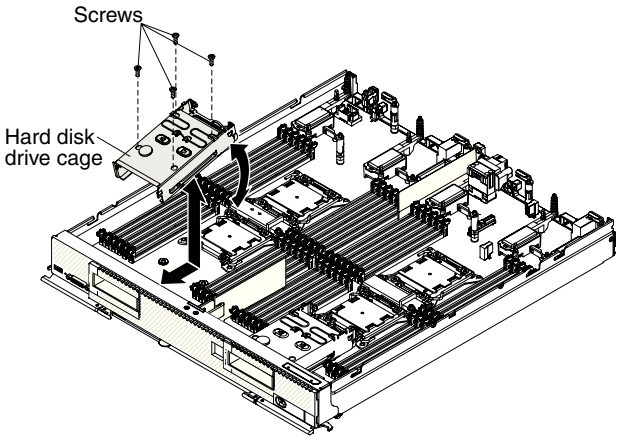

1. Remove the cover (see "Removing the compute node cover" on page 498).
2. Remove the hot-swap hard disk drives and hard disk drive bay fillers (see "Removing a hot-swap hard disk drive" on page 522).
3. Remove the hard disk drive backplane (see "Removing the hard disk drive backplane" on page 519).
4. Using a T8 Torx screwdriver, remove the four screws from the cage and rotate the cage from under the bezel; then, remove the cage from the compute node at an angle.

What to do next

If you are instructed to return the hard disk drive cage, follow all packaging instructions, and use any packaging materials for shipping that are supplied to you.

Installing the hard disk drive cage

Use this information to install the hard disk drive cage.

Before you begin

Note: This procedure should be performed only by trained service technicians.

Before you install the hard disk drive cage, complete the following steps:

1. Read "Safety" on page v and "Installation guidelines" on page 487.
2. If the compute node is installed in an IBM Flex System chassis, remove it (see "Removing a compute node from a chassis" on page 489 for instructions).
3. Carefully lay the compute node on a flat, static-protective surface, orienting the compute node with the bezel pointing toward you.

Procedure

To install the hard disk drive cage, complete the following steps.

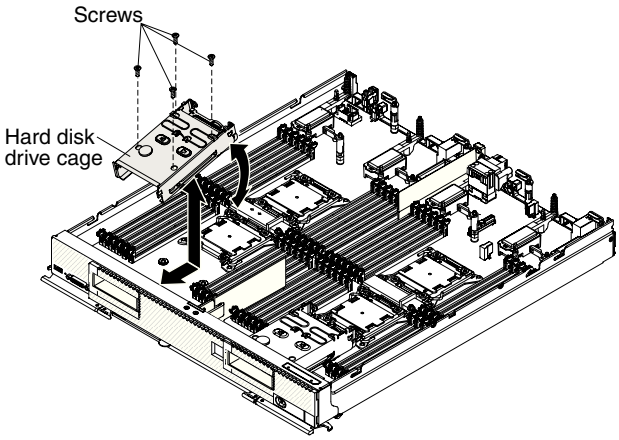

1. Remove the cover (see “Removing the compute node cover” on page 498).
2. Position the cage in the bezel at an angle and rotate the cage into position on the system board.
3. Align the cage with the screw holes on the system board.
4. Using a T8 Torx screwdriver, install the four screws and secure the cage in the compute node.
5. Install the hard disk drive backplane (see “Installing the hard disk drive backplane” on page 521).
6. Insert the hot-swap hard disk drives and hard disk drive bay fillers (see “Installing a hot-swap hard disk drive” on page 523).

What to do next

After you install the hard disk drive cage, complete the following steps:

1. Install the cover onto the compute node (see “Installing the compute node cover” on page 500 for instructions).
2. Install the compute node into the chassis (see “Installing a compute node in a chassis” on page 490 for instructions).

Removing a fabric connector

Use this information to remove a fabric connector.

Before you begin

Note: This procedure should be performed only by trained service technicians.

Before you remove the fabric connector, complete the following steps:

1. Read “Safety” on page v and “Installation guidelines” on page 487.
2. If the compute node is installed in an IBM Flex System chassis, remove it (see “Removing a compute node from a chassis” on page 489 for instructions).
3. Carefully lay the compute node on a flat, static-protective surface, orienting the compute node with the bezel pointing toward you.

About this task

When you remove the fabric connector, the UEFI firmware holds the Ethernet controller in reset and displays a warning message, if an I/O expansion adapter is not installed in the I/O expansion connector 1 to provide connectivity to the chassis.

Procedure

To remove a fabric connector, complete the following steps.

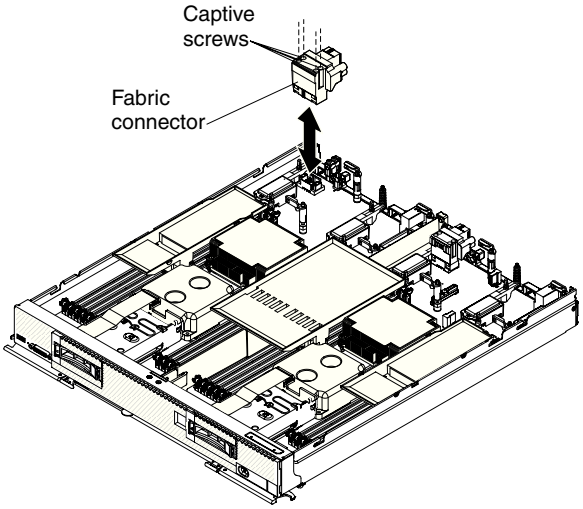

1. Remove the cover (see "Removing the compute node cover" on page 498).
2. Locate the fabric connector on the system board.
3. Using a Phillips #1 screwdriver, loosen the four captive screws that secure the fabric connector.
4. Lift the fabric connector from the system board and store it in a safe place.

What to do next

If you are instructed to return the fabric connector, follow all packaging instructions, and use any packaging materials for shipping that are supplied to you.

If you have removed the fabric connector to install an I/O expansion adapter in I/O expansion connector 1, keep the fabric connector in a safe place for future use.

Installing a fabric connector

Use this information to install a fabric connector.

Before you begin

Note: This procedure should be performed only by trained service technicians.

Before you install a fabric connector, complete the following steps:

1. Read "Safety" on page v and "Installation guidelines" on page 487.
2. If the compute node is installed in an IBM Flex System chassis, remove it (see "Removing a compute node from a chassis" on page 489 for instructions).

3. Carefully lay the compute node on a flat, static-protective surface, orienting the compute node with the bezel pointing toward you.

Procedure

To install a fabric connector, complete the following steps.

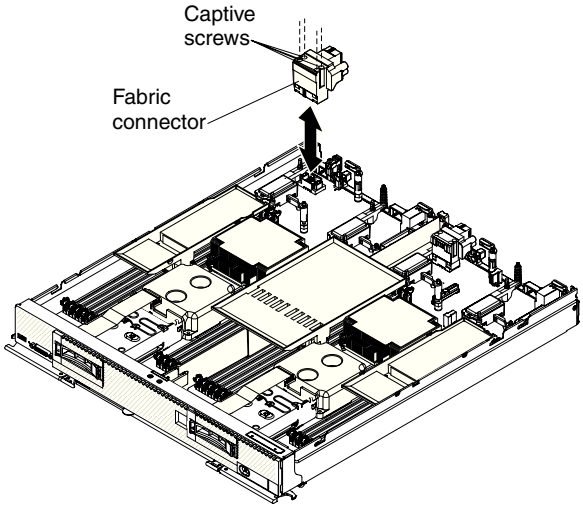

1. Remove the cover (see "Removing the compute node cover" on page 498).
2. Locate the fabric connector (see "System-board layouts" on page 16).
3. Orient the fabric connector on the system board.
4. Using a Phillips #1 screwdriver, tighten the four captive screws to secure the fabric connector.

   Attention: Make sure that the fabric connector is secure, but do not overtighten the screws, to avoid damaging the connector.

What to do next

After you install the fabric connector, complete the following steps:

1. Install the cover onto the compute node (see "Installing the compute node cover" on page 500 for instructions).
2. Install the compute node into the chassis (see "Installing a compute node in a chassis" on page 490 for instructions).

Removing a microprocessor and heat sink

Use this information to remove a microprocessor and heat sink.

Before you begin

Note: This procedure should be performed only by trained service technicians.

Before you remove the microprocessor and heat sink, complete the following steps:

1. Read "Safety" on page v and "Installation guidelines" on page 487.
2. If the compute node is installed in an IBM Flex System chassis, remove it (see "Removing a compute node from a chassis" on page 489 for instructions).
3. Carefully lay the compute node on a flat, static-protective surface, orienting the compute node with the bezel pointing toward you.

About this task

The following notes describe information that you must consider when you remove a microprocessor:

- A socket cover and heat-sink filler or a microprocessor and heat sink must always be installed on microprocessor sockets 1, 3, and 4. Microprocessor socket 2 will only have a socket cover when a microprocessor is not install. If the compute node has only one microprocessor, it must be installed in microprocessor socket 1.
- The microprocessor installation tool might become worn after several uses. Make sure that the tool can hold the microprocessor securely if you are reusing an existing microprocessor installation tool. Do not return the tool with other parts that you are returning.
- If you are installing a second microprocessor, the option kit comes with a microprocessor installation tool that you must use when you install a microprocessor. The microprocessor installation tool comes with the replacement microprocessor installed on it and a cover over the microprocessor.
- If you are replacing a defective microprocessor, the CRU kit comes with one installation tool with the replacement microprocessor installed on it and a cover over the microprocessor, and one empty installation tool without a cover.
- If you are replacing a defective microprocessor, you must obtain the following items for use during the replacement procedure (see Chapter 5, "Parts listing, Types 7917 and 2584," on page 51):
  - Alcohol wipes
  - Thermal grease

Procedure

To remove a microprocessor and heat sink, complete the following steps.

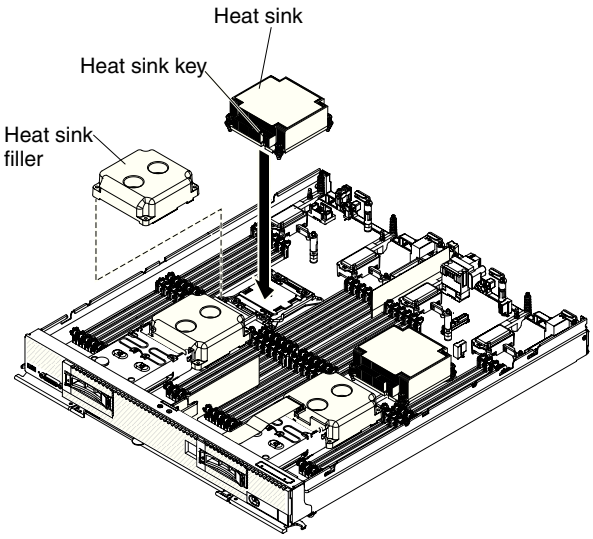

1. Remove the cover (see "Removing the compute node cover" on page 498).
2. Locate the microprocessor that is to be removed (see "System-board connectors" on page 16).
3. Remove the heat sink.

   Attention: Do not touch the thermal material on the bottom of the heat sink. Touching the thermal material will contaminate it.

a. Use a screwdriver to loosen the screw on one side of the heat sink to break the seal with the microprocessor.
b. Use a screwdriver to loosen the screws on the heat sink, rotating each screw two full turns until each screw is loose.
c. Gently pull the heat sink from the microprocessor.

Attention: Do not use any tools or sharp objects to lift the release levers on the microprocessor socket. Doing so might result in permanent damage to the system board.

4. Open the microprocessor socket release levers and retainer.

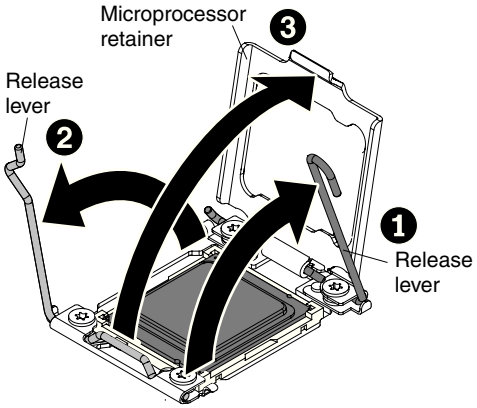

a. Identify which release lever is labeled as the first release lever to open, and open it.
b. Open the second release lever on the microprocessor socket.
c. Open the microprocessor retainer.

Attention: Do not touch the connectors on the microprocessor and the microprocessor socket.

5. Remove the microprocessor from the socket.

Note: If you are replacing a microprocessor, use the empty installation tool that comes with the CRU kit to remove the microprocessor.

a. Twist the handle on the microprocessor tool counterclockwise so that it is in the open position.

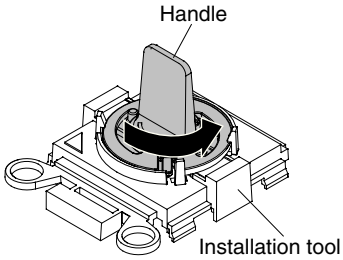

b. Align the installation tool with the screws on the microprocessor socket, and lower the tool on the microprocessor. The installation tool rests flush on the socket only if it is aligned correctly.

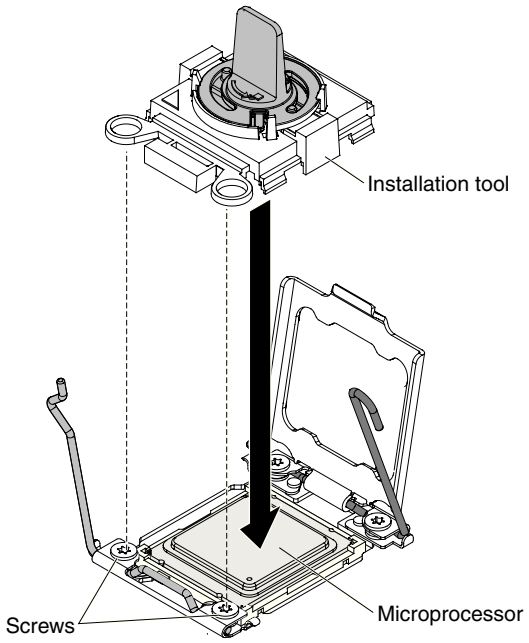

c. Twist the handle on the installation tool clockwise and lift the microprocessor out of the socket.

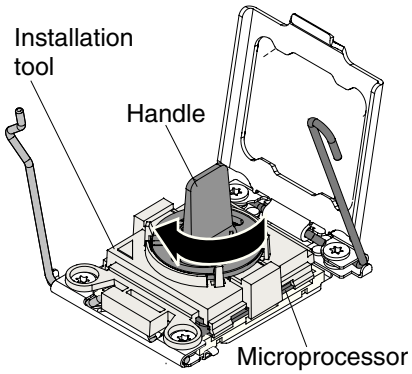

What to do next

If you are instructed to return the microprocessor and heat sink, follow all packaging instructions, and use any packaging materials for shipping that are supplied to you.

Installing a microprocessor and heat sink

Use this information to install a microprocessor and heat sink.

Before you begin

Note: This procedure should be performed only by trained service technicians.

The architecture of the Intel Sandy Bridge-EP 4S and DMI switching of microprocessor sockets 1 and 2 allow for the processors to be populated as shown in the following figures.

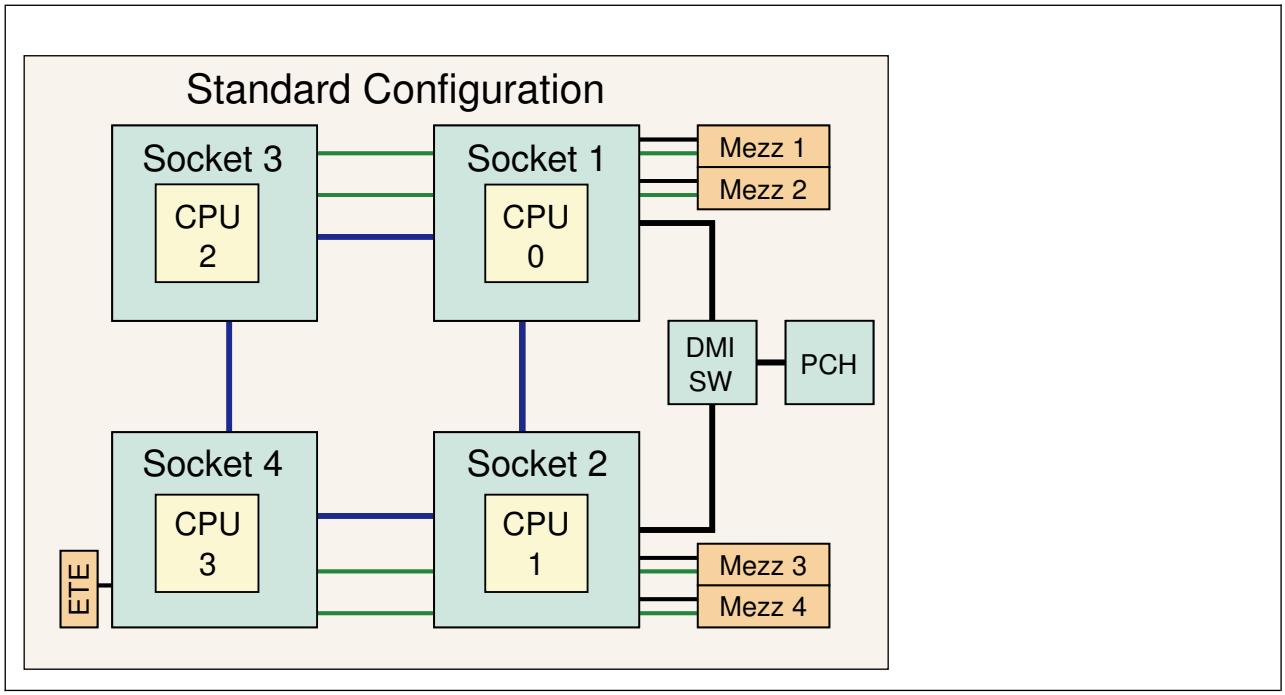

Figure 1. Standard Configuration

Art dw1ks305 goes here.

Table 14. Supported CPU installation combinations

Number of microprocessors	Microprocessors socket 1	Microprocessors socket 2	Microprocessors socket 3	Microprocessors socket 4
1	**CPU0**			
1		CPU0		
2	**CPU0**	**CPU1**		
2	CPU0		CPU1	
2		CPU0		CPU1
4	**CPU0**	**CPU1**	**CPU2**	**CPU3**

Notes:

1. CPU0 is the boot strap processor.
2. Combinations highlighted in **bold** represent the default configurations, which should be used when processors are installed during manufacturing. The other combinations shown in the table are supported in the event of an error.
3. If a bad processor in microprocessor socket 1 causes the processor installed in microprocessor socket 2 to become the boot strap processor and is subsequently replaced, the processor ordering reverts to the default CPU IDs for the new number of CPUs, because the FPGA would not hold the last CPU ID assignments and "add in" the replaced processor.
4. Three-processor configurations are not supported.
5. A microprocessor failure in a four-processor configuration will result in the system failing down to three functional microprocessor.

The supported microprocessor configurations are shown in the following illustrations.

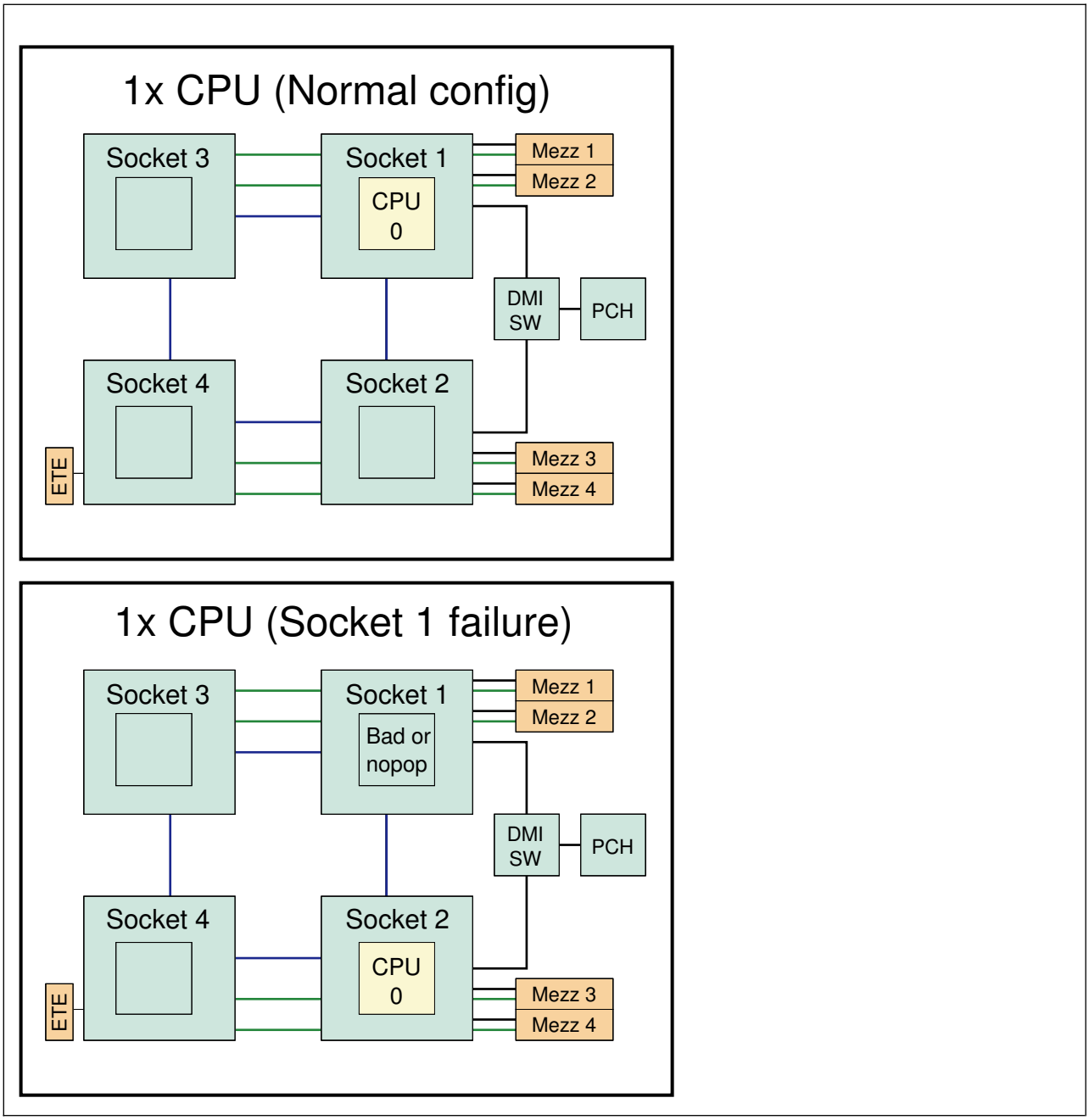

Figure 2. Supported one CPU configuration

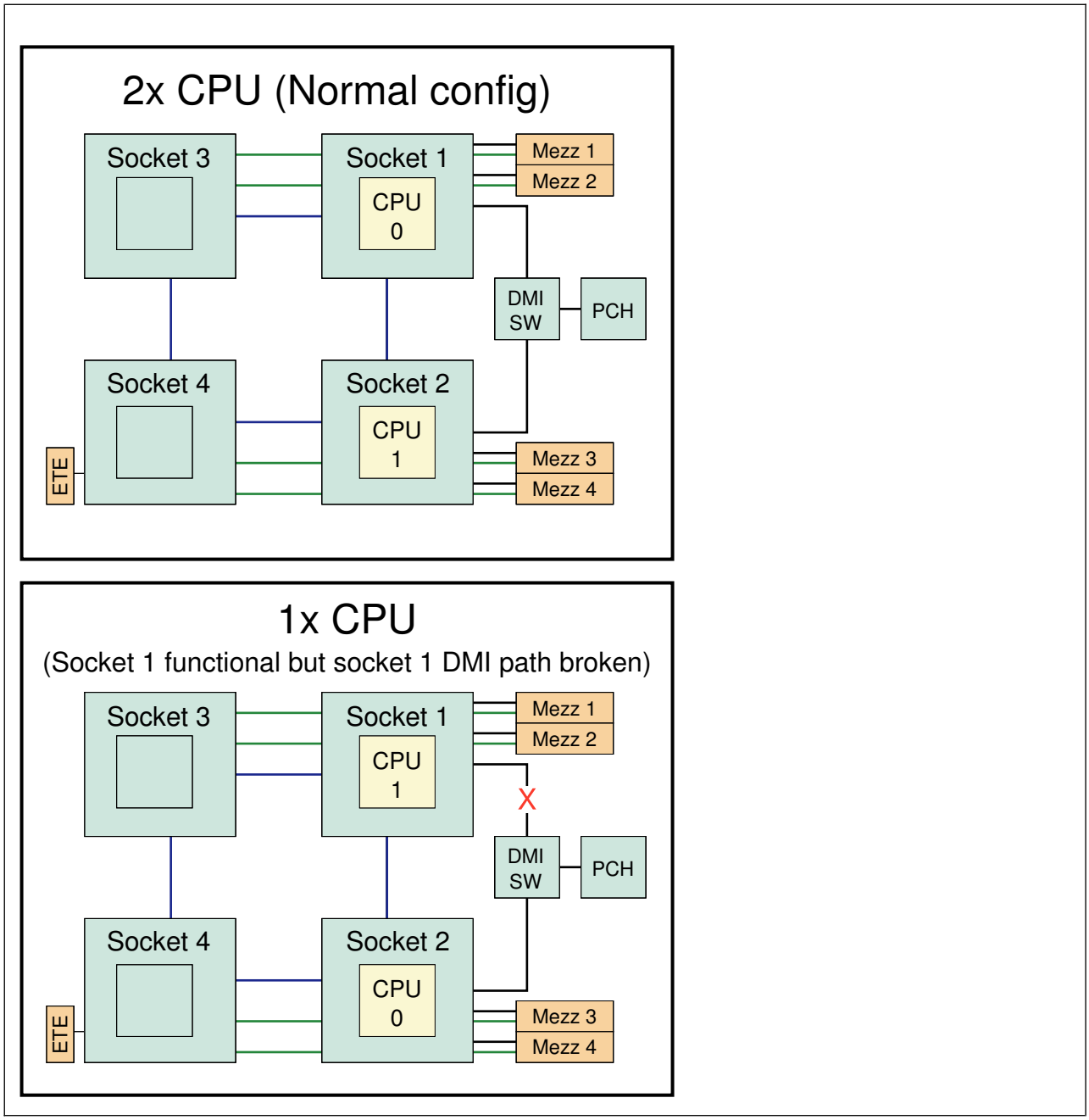

Figure 3. Supported two CPUs configuration

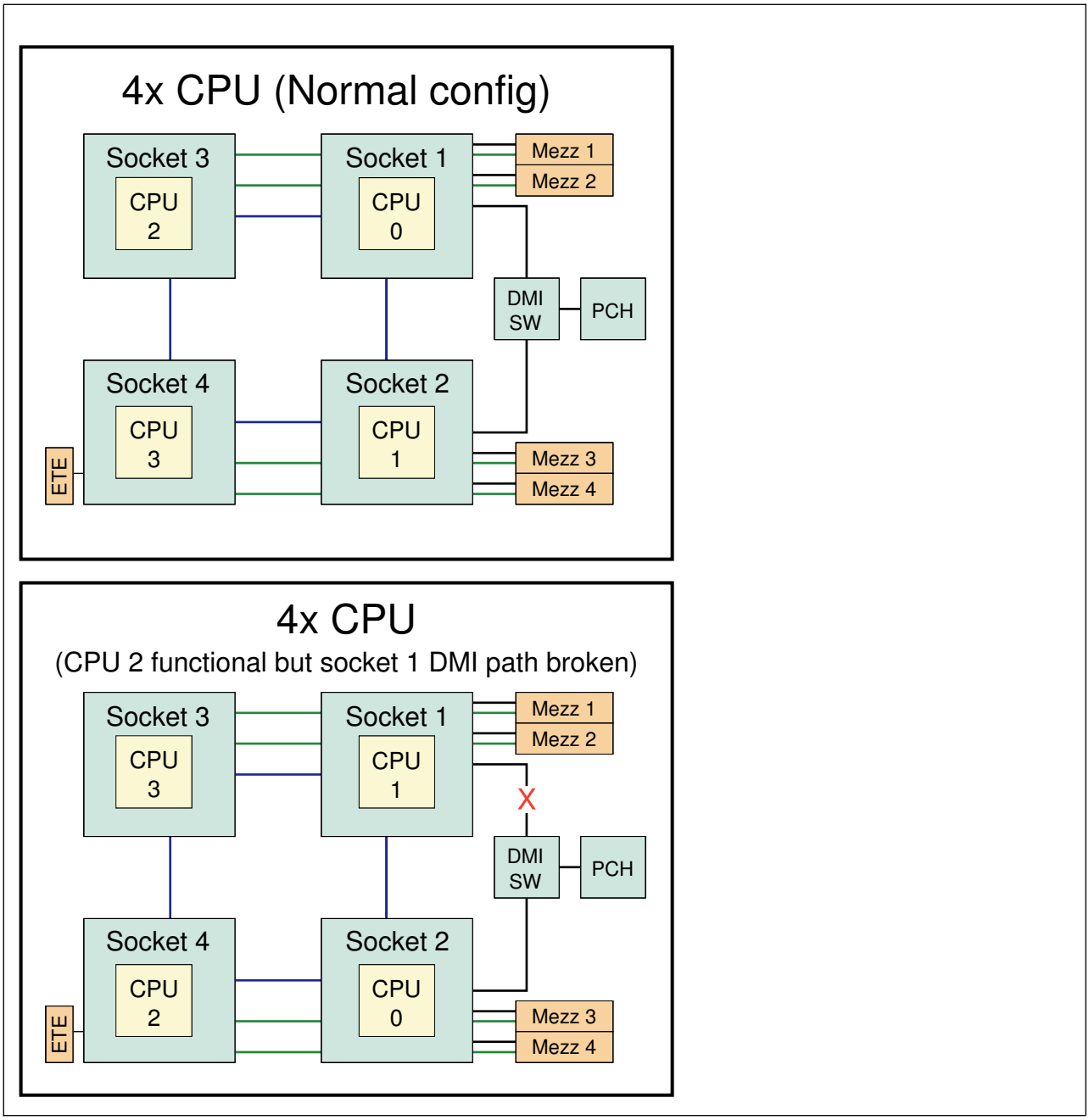

Figure 4. Supported four CPUs configuration

Before you install a microprocessor and heat sink, complete the following steps:

1. Read "Safety" on page v and "Installation guidelines" on page 487.
2. If the compute node is installed in an IBM Flex System chassis, remove it (see "Removing a compute node from a chassis" on page 489 for instructions).
3. Carefully lay the compute node on a flat, static-protective surface, orienting the compute node with the bezel pointing toward you.

About this task

The following notes describe the type of microprocessor that the compute node supports and other information that you must consider when you install a microprocessor:

- This component can be installed as an optional device or as a CRU. The installation procedure is the same for the optional device and the CRU.
- The optional microprocessors that IBM supports are limited by the capacity and capability of the compute node. Any microprocessors that you install must have the same specifications as the microprocessors that came with the compute node.
- A socket cover and heat-sink filler or a microprocessor and heat sink must always be installed on microprocessor sockets 1, 3, and 4. Microprocessor socket 2 will only have a socket cover when a microprocessor is not install. If the compute node has only one microprocessor, it must be installed in microprocessor socket 1.
- If you are installing a second microprocessor, make sure that the microprocessors are identical.
- Before you install a new microprocessor, download and install the most current level of UEFI code (see "Updating firmware and device drivers" on page 23).
- When you install a second microprocessor, you might have to install additional memory or redistribute memory across the DIMM connectors. See "Installing a DIMM" on page 502.
- The microprocessor installation tool might become worn after several uses. Make sure that the tool can hold the microprocessor securely if you are reusing an existing microprocessor installation tool. Do not return the tool with other parts that you are returning.
- If you are installing a second microprocessor, the microprocessor option kit comes with a microprocessor installation tool that you must use when you install a microprocessor. The microprocessor installation tool comes with the replacement microprocessor installed on it and a cover over the microprocessor.
- If you are replacing a defective microprocessor, the CRU kit comes with one installation tool with the replacement microprocessor installed on it and a cover over the microprocessor, and one empty installation tool without a cover.
- If you are replacing a defective microprocessor, you must obtain the following items for use during the replacement procedure (see Chapter 5, "Parts listing, Types 7917 and 2584," on page 51):
  - Alcohol wipes
  - Thermal grease

Attention:

1. Do not use any tools or sharp objects to lift the locking levers on the microprocessor socket. Doing so might result in permanent damage to the system board.
2. Do not touch the contacts in the microprocessor socket. Touching these contacts might result in permanent damage to the system board.

Procedure

To install a microprocessor and heat sink, complete the following steps.

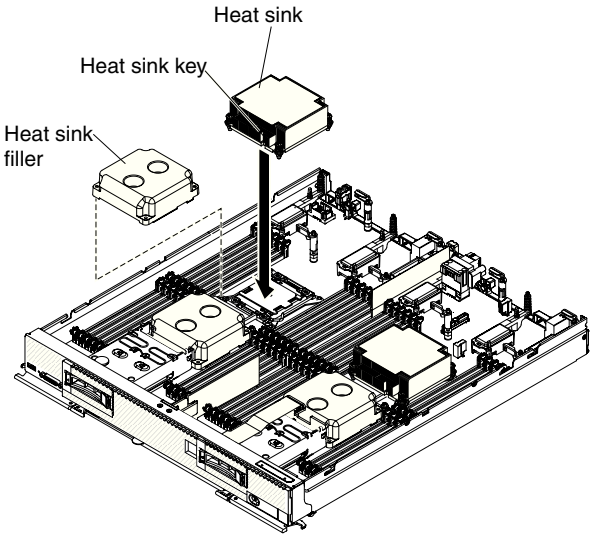

1. Remove the cover (see "Removing the compute node cover" on page 498).
2. If you are not installing a new microprocessor and a new heat sink, remove the thermal grease from the heat sink and microprocessor; then, apply new thermal grease before installation (see "Thermal grease" on page 551).
3. Remove the heat-sink filler, if one is present.
4. Open the microprocessor socket release levers and retainer.

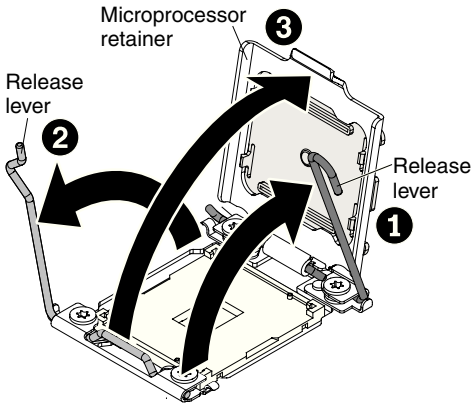

   a. Identify which release lever is labeled as the first release lever to open and open it.
   b. Open the second release lever on the microprocessor socket.
   c. Open the microprocessor retainer.
5. Install the microprocessor on the microprocessor socket:

a. Touch the static-protective bag that contains the new microprocessor to any *unpainted* surface on the IBM Flex System chassis or any *unpainted* metal surface on any other grounded rack component; then, carefully remove the microprocessor and installation tool from the package.

b. Release the sides of the cover and remove the cover from the installation tool. The microprocessor is preinstalled on the installation tool.

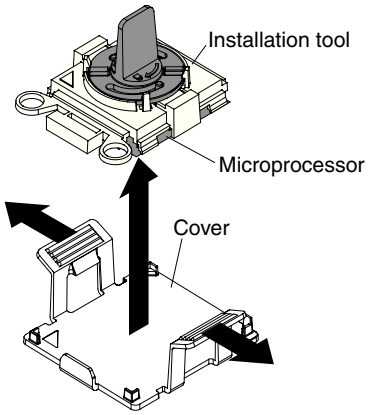

Note: Do not touch the microprocessor contacts. Contaminants on the microprocessor contacts, such as oil from your skin, can cause connection failures between the contacts and the socket.

c. Align the installation tool with the microprocessor socket. The installation tool rests flush on the socket only if it is properly aligned.

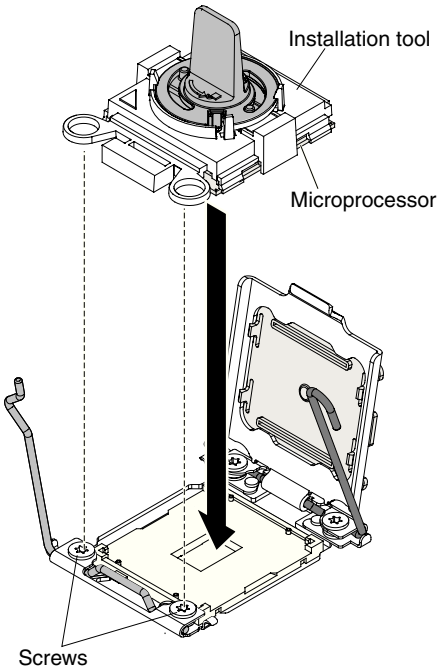

d. Twist the handle on the microprocessor tool counterclockwise to insert the microprocessor into the socket. The microprocessor is keyed to ensure that the microprocessor is installed correctly. The microprocessor rests flush on the socket only if it is properly installed.

Attention:

- Do not press the microprocessor into the socket.
- Make sure that the microprocessor is oriented and aligned correctly in the socket before you try to close the microprocessor retainer.
- Do not touch the thermal material on the bottom of the heat sink or on top of the microprocessor. Touching the thermal material will contaminate it.

6. Close the microprocessor socket release retainer and levers.

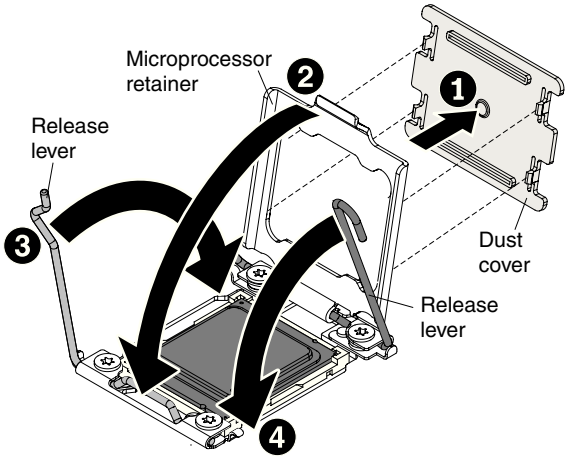

   a. Close the microprocessor retainer on the microprocessor socket.
   b. Identify which release lever is labeled as the first release lever to close, and close it.
   c. Close the second release lever on the microprocessor socket.
   d. If a socket cover is installed over the microprocessor retainer, it is released as you close the retainer. Remove the socket cover from the compute node and store it in a safe place.

      Attention:

      - If you are installing a new heat sink, do not set down the heat sink after you remove the plastic cover.
      - Do not touch the thermal material on the bottom of the heat sink. Touching the thermal material will contaminate it.

7. If you are installing a new heat sink, remove the plastic protective cover from the bottom of the heat sink. If you are reinstalling a heat sink that you previously removed from the compute node, make sure that the thermal material is still on the bottom of the heat sink and on the top of the microprocessor.
   a. Position the heat sink over the microprocessor. The heat sink is keyed to assist with proper alignment.
   b. Align and place the heat sink on top of the microprocessor in the retention bracket, thermal material side down.
   c. Press firmly on the heat sink.
   d. Align the screws on the heat sink with the holes on the heat-sink retention module.
   e. Press firmly on the captive screws and tighten them with a screwdriver, alternating among the screws until they are tight. If possible, each screw should be rotated two full rotations at a time. Repeat until the screws are tight. Do not overtighten the screws by using excessive force. If you are

using a torque wrench, tighten the screws to 0.9 Newton-meters (Nm) to 1.13 Nm (8 inch-pounds to 10 inch-pounds).

What to do next

After you install a microprocessor and heat sink, complete the following steps:

1. Install the cover (see "Installing the compute node cover" on page 500).
2. Install the compute node in a IBM Flex System chassis (see "Installing a compute node in a chassis" on page 490 for instructions).

Thermal grease

Use this information to determine the guidelines for using thermal grease on a heat sink and microprocessor.

About this task

Note: This procedure should be performed only by trained service technicians.

The thermal grease must be replaced whenever the heat sink has been removed from the top of the microprocessor and is going to be reused or when debris is found in the grease.

To replace damaged or contaminated thermal grease on the microprocessor and heat sink, complete the following steps:

Procedure

1. Place the heat-sink assembly on a clean work surface.
2. Remove the cleaning pad from its package and unfold it completely.
3. Use the cleaning pad to wipe the thermal grease from the bottom of the heat sink.

   Note: Make sure that all of the thermal grease is removed.
4. Use a clean area of the cleaning pad to wipe the thermal grease from the microprocessor; then, dispose of the cleaning pad after all of the thermal grease is removed.

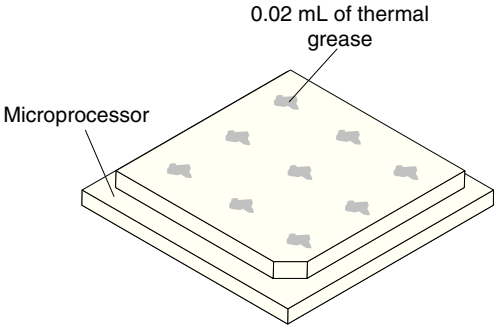

5. Use the thermal-grease syringe to place nine uniformly spaced dots of 0.02 mL each on the top of the microprocessor.

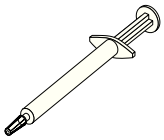

Note: 0.01mL is one tick mark on the syringe. If the grease is properly applied, approximately half (0.22 mL) of the grease will remain in the syringe.

6. Continue with the microprocessor installation instructions in "Installing a microprocessor and heat sink" on page 542.

Removing a microprocessor-retention assembly

Use this information to remove a microprocessor-retention assembly.

Before you begin

Note: This procedure should be performed only by trained service technicians.

Before you remove the microprocessor-retention assembly, complete the following steps:

1. Read "Safety" on page v and "Installation guidelines" on page 487.
2. If the compute node is installed in an IBM Flex System chassis, remove it (see "Removing a compute node from a chassis" on page 489 for instructions).
3. Carefully lay the compute node on a flat, static-protective surface, orienting the compute node with the bezel pointing toward you.

Procedure

To remove a microprocessor-retention assembly, complete the following steps.

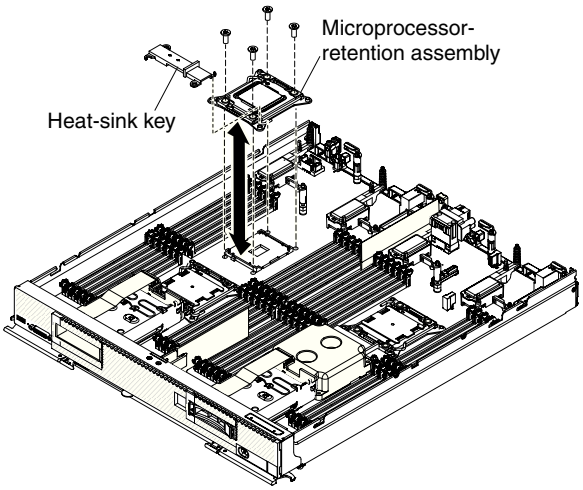

1. Remove the cover (see "Removing the compute node cover" on page 498).
2. Locate the microprocessor socket on the system board.
3. If a microprocessor and heat sink are installed, remove them (see "Removing a microprocessor and heat sink" on page 539).
4. Remove the heat-sink key from the microprocessor-retention assemblies and store it in a safe place.
5. Make sure that the microprocessor socket release levers are in the open position.
6. Using a T20 Torx screwdriver, remove the four screws that secure the microprocessor-retention assembly.

Attention:

a. Do not allow the microprocessor-retention assembly to touch the microprocessor socket. Doing so might result in permanent damage to the system board.
b. Do not touch the contacts in the microprocessor socket. Touching these contacts might result in permanent damage to the system board.

7. Lift the microprocessor-retention assembly from the system board.

What to do next

If you are instructed to return the microprocessor-retention assembly, follow all packaging instructions, and use any packaging materials for shipping that are supplied to you.

Installing a microprocessor-retention assembly

Use this information to install a microprocessor-retention assembly.

Before you begin

Note: This procedure should be performed only by trained service technicians.

Before you install a microprocessor-retention assembly, complete the following steps:

1. Read "Safety" on page v and "Installation guidelines" on page 487.
2. If the compute node is installed in an IBM Flex System chassis, remove it (see "Removing a compute node from a chassis" on page 489 for instructions).
3. Carefully lay the compute node on a flat, static-protective surface, orienting the compute node with the bezel pointing toward you.

Procedure

To install a microprocessor-retention assembly, complete the following steps.

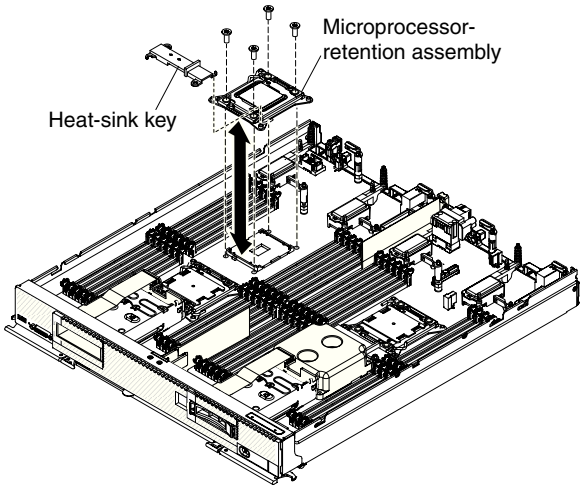

1. Remove the cover (see "Removing the compute node cover" on page 498).
2. Make sure that the microprocessor socket release levers are in the open position.
3. Align the microprocessor-retention assembly on the system board.

Attention:

a. Do not allow the microprocessor-retention assembly to touch the microprocessor socket. Doing so might result in permanent damage to the system board.
b. Do not touch the contacts in the microprocessor socket. Touching these contacts might result in permanent damage to the system board.

4. Using a T20 Torx screwdriver, install the four screws to secure the microprocessor-retention assembly.
5. Install the heat-sink key on the microprocessor retention assemblies.
6. If necessary, install the microprocessor and heat sink (see "Installing a microprocessor and heat sink" on page 542).

What to do next

After you install the microprocessor-retention assembly, complete the following steps:

1. Install the cover onto the compute node (see "Installing the compute node cover" on page 500 for instructions).
2. Install the compute node into the chassis (see "Installing a compute node in a chassis" on page 490 for instructions).

Appendix. Getting help and technical assistance

If you need help, service, or technical assistance or just want more information about IBM products, you will find a wide variety of sources available from IBM to assist you.

Use this information to obtain additional information about IBM and IBM products, determine what to do if you experience a problem with your IBM system or optional device, and determine whom to call for service, if it is necessary.

Before you call

Before you call, make sure that you have taken these steps to try to solve the problem yourself.

If you believe that you require IBM to perform warranty service on your IBM product, the IBM service technicians will be able to assist you more efficiently if you prepare before you call.

- Check for updated firmware and operating-system device drivers for your IBM product. The IBM Warranty terms and conditions state that you, the owner of the IBM product, are responsible for maintaining and updating all software and firmware for the product (unless it is covered by an additional maintenance contract). Your IBM service technician will request that you upgrade your software and firmware if the problem has a documented solution within a software upgrade.

  Determine whether the firmware and device drivers for the devices in the IBM Flex System Enterprise Chassis are up to date. You can use the IBM Flex System Manager Update Manager to automatically acquire, install, and manage firmware and device-driver updates for the devices in the chassis.
- If you have installed new hardware or software in your environment, check http://www.ibm.com/systems/info/x86servers/serverproven/compat/us/ to make sure that the hardware and software is supported by your IBM product.
- Go to http://www.ibm.com/supportportal/ to check for information to help you solve the problem.
- Gather the following information to provide to IBM Support. This data will help IBM Support quickly provide a solution to your problem and ensure that you receive the level of service for which you might have contracted.
  - Hardware and Software Maintenance agreement contract numbers, if applicable
  - Machine type number (IBM 4-digit machine identifier)
  - Model number
  - Serial number
  - Current system UEFI and firmware levels
  - Other pertinent information such as error messages and logs
- Submit a manual service request through the IBM Flex System Manager management software. When you submit a manual service request, service data about the problem is included in the request, which will help IBM Support more quickly begin to diagnose the problem.

© Copyright IBM Corp. 2012

- Go to http://www.ibm.com/support/electronic/portal/ to submit an Electronic Service Request. Submitting an Electronic Service Request will start the process of determining a solution to your problem by making the pertinent information available to IBM Support quickly and efficiently. IBM service technicians can start working on your solution as soon as you have completed and submitted an Electronic Service Request.

Using the documentation

Information about your IBM system and preinstalled software, if any, or optional device is available in the documentation that comes with the product. That documentation can include printed documents, online documents, readme files, and help files.

See the troubleshooting information in your system documentation for instructions for using the diagnostic programs. The troubleshooting information or the diagnostic programs might tell you that you need additional or updated device drivers or other software. IBM maintains pages on the World Wide Web where you can get the latest technical information and download device drivers and updates. To access these pages, go to http://www.ibm.com/supportportal/ .

Getting help and information from the World Wide Web

Up-to-date information about IBM products and support is available on the World Wide Web.

On the World Wide Web, up-to-date information about IBM systems, optional devices, services, and support is available at http://www.ibm.com/supportportal/ .

You can find the most up-to-date product information for the IBM Flex System product family at http://publib.boulder.ibm.com/infocenter/flexsys/information/index.jsp/ .

How to send DSA data to IBM

Use the IBM Enhanced Customer Data Repository to send diagnostic data to IBM.

Before you send diagnostic data to IBM, read http://www.ibm.com/de/support/ecurep/send_http.html .

You can use any of the following methods to send diagnostic data to IBM:

- **Standard upload:** http://www.ibm.com/de/support/ecurep/send_http.html
- **Standard upload with the system serial number:** http://www.ecurep.ibm.com/app/upload_hw/
- **Secure upload:** http://www.ibm.com/de/support/ecurep/send_http.html#secure
- **Secure upload with the system serial number:** https://www.ecurep.ibm.com/app/upload_hw/

Creating a personalized support web page

You can create a personalized support web page by identifying IBM products that are of interest to you.

To create a personalized support web page, go to http://www.ibm.com/support/mysupport/ . From this personalized page, you can subscribe to weekly email notifications about new technical documents, search for information and downloads, and access various administrative services.

Software service and support

Through IBM Support Line, you can get telephone assistance, for a fee, with usage, configuration, and software problems with your IBM products.

For information about which products are supported by Support Line in your country or region, see http://www.ibm.com/services/supline/products/ .

For more information about Support Line and other IBM services, see http://www.ibm.com/services/ or see http://www.ibm.com/planetwide/ for support telephone numbers. In the U.S. and Canada, call 1-800-IBM-SERV (1-800-426-7378).

Hardware service and support

You can receive hardware service through your IBM reseller or IBM Services.

To locate a reseller authorized by IBM to provide warranty service, go to http://www.ibm.com/partnerworld/ and click **Find Business Partners** on the right side of the page. For IBM support telephone numbers, see http://www.ibm.com/planetwide/ . In the U.S. and Canada, call 1-800-IBM-SERV (1-800-426-7378).

In the U.S. and Canada, hardware service and support is available 24 hours a day, 7 days a week. In the U.K., these services are available Monday through Friday, from 9 a.m. to 6 p.m.

IBM Taiwan product service

Use this information to contact IBM Taiwan product service.

台灣 IBM 產品服務聯絡方式：
台灣國際商業機器股份有限公司
台北市松仁路 7 號 3 樓
電話：0800-016-888

IBM Taiwan product service contact information:

IBM Taiwan Corporation
3F, No 7, Song Ren Rd.
Taipei, Taiwan
Telephone: 0800-016-888

Notices

This information was developed for products and services offered in the U.S.A.

IBM may not offer the products, services, or features discussed in this document in other countries. Consult your local IBM representative for information on the products and services currently available in your area. Any reference to an IBM product, program, or service is not intended to state or imply that only that IBM product, program, or service may be used. Any functionally equivalent product, program, or service that does not infringe any IBM intellectual property right may be used instead. However, it is the user's responsibility to evaluate and verify the operation of any non-IBM product, program, or service.

IBM may have patents or pending patent applications covering subject matter described in this document. The furnishing of this document does not give you any license to these patents. You can send license inquiries, in writing, to:

IBM Director of Licensing
IBM Corporation
North Castle Drive
Armonk, NY 10504-1785
U.S.A.

INTERNATIONAL BUSINESS MACHINES CORPORATION PROVIDES THIS PUBLICATION "AS IS" WITHOUT WARRANTY OF ANY KIND, EITHER EXPRESS OR IMPLIED, INCLUDING, BUT NOT LIMITED TO, THE IMPLIED WARRANTIES OF NON-INFRINGEMENT, MERCHANTABILITY OR FITNESS FOR A PARTICULAR PURPOSE. Some states do not allow disclaimer of express or implied warranties in certain transactions, therefore, this statement may not apply to you.

This information could include technical inaccuracies or typographical errors. Changes are periodically made to the information herein; these changes will be incorporated in new editions of the publication. IBM may make improvements and/or changes in the product(s) and/or the program(s) described in this publication at any time without notice.

Any references in this information to non-IBM websites are provided for convenience only and do not in any manner serve as an endorsement of those websites. The materials at those websites are not part of the materials for this IBM product, and use of those websites is at your own risk.

IBM may use or distribute any of the information you supply in any way it believes appropriate without incurring any obligation to you.

Trademarks

IBM, the IBM logo, and ibm.com are trademarks of International Business Machines Corp., registered in many jurisdictions worldwide. Other product and service names might be trademarks of IBM or other companies.

A current list of IBM trademarks is available on the web at "Copyright and trademark information" at http://www.ibm.com/legal/copytrade.shtml .

© Copyright IBM Corp. 2012

Adobe and PostScript are either registered trademarks or trademarks of Adobe Systems Incorporated in the United States and/or other countries.

Cell Broadband Engine is a trademark of Sony Computer Entertainment, Inc., in the United States, other countries, or both and is used under license therefrom.

Intel, Intel Xeon, Itanium, and Pentium are trademarks or registered trademarks of Intel Corporation or its subsidiaries in the United States and other countries.

Java and all Java-based trademarks and logos are trademarks or registered trademarks of Oracle and/or its affiliates.

Linux is a registered trademark of Linus Torvalds in the United States, other countries, or both.

Microsoft, Windows, and Windows NT are trademarks of Microsoft Corporation in the United States, other countries, or both.

UNIX is a registered trademark of The Open Group in the United States and other countries.

Important notes

Processor speed indicates the internal clock speed of the microprocessor; other factors also affect application performance.

CD or DVD drive speed is the variable read rate. Actual speeds vary and are often less than the possible maximum.

When referring to processor storage, real and virtual storage, or channel volume, KB stands for 1024 bytes, MB stands for 1,048,576 bytes, and GB stands for 1,073,741,824 bytes.

When referring to hard disk drive capacity or communications volume, MB stands for 1,000,000 bytes, and GB stands for 1,000,000,000 bytes. Total user-accessible capacity can vary depending on operating environments.

Maximum internal hard disk drive capacities assume the replacement of any standard hard disk drives and population of all hard disk drive bays with the largest currently supported drives that are available from IBM.

Maximum memory might require replacement of the standard memory with an optional memory module.

Each solid-state memory cell has an intrinsic, finite number of write cycles that the cell can incur. Therefore, a solid-state device has a maximum number of write cycles that it can be subjected to, expressed as “total bytes written” (TBW). A device that has exceeded this limit might fail to respond to system-generated commands or might be incapable of being written to. IBM is not responsible for replacement of a device that has exceeded its maximum guaranteed number of program/erase cycles, as documented in the Official Published Specifications for the device.

IBM makes no representation or warranties regarding non-IBM products and services that are ServerProven, including but not limited to the implied warranties of merchantability and fitness for a particular purpose. These products are offered and warranted solely by third parties.

IBM makes no representations or warranties with respect to non-IBM products. Support (if any) for the non-IBM products is provided by the third party, not IBM.

Some software might differ from its retail version (if available) and might not include user manuals or all program functionality.

Particulate contamination

Attention: Airborne particulates (including metal flakes or particles) and reactive gases acting alone or in combination with other environmental factors such as humidity or temperature might pose a risk to the device that is described in this document.

Risks that are posed by the presence of excessive particulate levels or concentrations of harmful gases include damage that might cause the device to malfunction or cease functioning altogether. This specification sets forth limits for particulates and gases that are intended to avoid such damage. The limits must not be viewed or used as definitive limits, because numerous other factors, such as temperature or moisture content of the air, can influence the impact of particulates or environmental corrosives and gaseous contaminant transfer. In the absence of specific limits that are set forth in this document, you must implement practices that maintain particulate and gas levels that are consistent with the protection of human health and safety. If IBM determines that the levels of particulates or gases in your environment have caused damage to the device, IBM may condition provision of repair or replacement of devices or parts on implementation of appropriate remedial measures to mitigate such environmental contamination. Implementation of such remedial measures is a customer responsibility.

Table 15. Limits for particulates and gases

Contaminant	Limits
Particulate	• The room air must be continuously filtered with 40% atmospheric dust spot efficiency (MERV 9) according to ASHRAE Standard 52.2[1]. • Air that enters a data center must be filtered to 99.97% efficiency or greater, using high-efficiency particulate air (HEPA) filters that meet MIL-STD-282. • The deliquescent relative humidity of the particulate contamination must be more than 60%[2]. • The room must be free of conductive contamination such as zinc whiskers.
Gaseous	• Copper: Class G1 as per ANSI/ISA 71.04-1985[3] • Silver: Corrosion rate of less than 300 Å in 30 days

1. ASHRAE 52.2-2008 - Method of Testing General Ventilation Air-Cleaning Devices for Removal Efficiency by Particle Size. Atlanta: American Society of Heating, Refrigerating and Air-Conditioning Engineers, Inc.
2. The deliquescent relative humidity of particulate contamination is the relative humidity at which the dust absorbs enough water to become wet and promote ionic conduction.
3. ANSI/ISA-71.04-1985. Environmental conditions for process measurement and control systems: Airborne contaminants. Instrument Society of America, Research Triangle Park, North Carolina, U.S.A.

Documentation format

The publications for this product are in Adobe Portable Document Format (PDF) and should be compliant with accessibility standards. If you experience difficulties when you use the PDF files and want to request a web-based format or accessible PDF document for a publication, direct your mail to the following address:

Information Development
IBM Corporation
205/A015
3039 E. Cornwallis Road
P.O. Box 12195
Research Triangle Park, North Carolina 27709-2195
U.S.A.

In the request, be sure to include the publication part number and title.

When you send information to IBM, you grant IBM a nonexclusive right to use or distribute the information in any way it believes appropriate without incurring any obligation to you.

Telecommunication regulatory statement

This product may not be certified in your country for connection by any means whatsoever to interfaces of public telecommunications networks. Further certification may be required by law prior to making any such connection. Contact an IBM representative or reseller for any questions.

Electronic emission notices

When you attach a monitor to the equipment, you must use the designated monitor cable and any interference suppression devices that are supplied with the monitor.

Federal Communications Commission (FCC) statement

Note: This equipment has been tested and found to comply with the limits for a Class A digital device, pursuant to Part 15 of the FCC Rules. These limits are designed to provide reasonable protection against harmful interference when the equipment is operated in a commercial environment. This equipment generates, uses, and can radiate radio frequency energy and, if not installed and used in accordance with the instruction manual, may cause harmful interference to radio communications. Operation of this equipment in a residential area is likely to cause harmful interference, in which case the user will be required to correct the interference at his own expense.

Properly shielded and grounded cables and connectors must be used in order to meet FCC emission limits. IBM is not responsible for any radio or television interference caused by using other than recommended cables and connectors or by unauthorized changes or modifications to this equipment. Unauthorized changes or modifications could void the user's authority to operate the equipment.

This device complies with Part 15 of the FCC Rules. Operation is subject to the following two conditions: (1) this device may not cause harmful interference, and (2) this device must accept any interference received, including interference that might cause undesired operation.

Industry Canada Class A emission compliance statement

This Class A digital apparatus complies with Canadian ICES-003.

Avis de conformité à la réglementation d'Industrie Canada

Cet appareil numérique de la classe A est conforme à la norme NMB-003 du Canada.

Australia and New Zealand Class A statement

Attention: This is a Class A product. In a domestic environment this product may cause radio interference in which case the user may be required to take adequate measures.

European Union EMC Directive conformance statement

This product is in conformity with the protection requirements of EU Council Directive 2004/108/EC on the approximation of the laws of the Member States relating to electromagnetic compatibility. IBM cannot accept responsibility for any failure to satisfy the protection requirements resulting from a nonrecommended modification of the product, including the fitting of non-IBM option cards.

Attention: This is an EN 55022 Class A product. In a domestic environment this product may cause radio interference in which case the user may be required to take adequate measures.

Responsible manufacturer:

International Business Machines Corp.
New Orchard Road
Armonk, New York 10504
914-499-1900

European Community contact:

IBM Deutschland GmbH
Technical Regulations, Department M372
IBM-Allee 1, 71139 Ehningen, Germany
Telephone: +49 7032 15 2941
Email: lugi@de.ibm.com

Germany Class A statement

Deutschsprachiger EU Hinweis: Hinweis für Geräte der Klasse A EU-Richtlinie zur Elektromagnetischen Verträglichkeit

Dieses Produkt entspricht den Schutzanforderungen der EU-Richtlinie 2004/108/EG zur Angleichung der Rechtsvorschriften über die elektromagnetische Verträglichkeit in den EU-Mitgliedsstaaten und hält die Grenzwerte der EN 55022 Klasse A ein.

Um dieses sicherzustellen, sind die Geräte wie in den Handbüchern beschrieben zu installieren und zu betreiben. Des Weiteren dürfen auch nur von der IBM empfohlene Kabel angeschlossen werden. IBM übernimmt keine Verantwortung für die Einhaltung der Schutzanforderungen, wenn das Produkt ohne Zustimmung der IBM verändert bzw. wenn Erweiterungskomponenten von Fremdherstellern ohne Empfehlung der IBM gesteckt/eingebaut werden.

EN 55022 Klasse A Geräte müssen mit folgendem Warnhinweis versehen werden: “Warnung: Dieses ist eine Einrichtung der Klasse A. Diese Einrichtung kann im Wohnbereich Funk-Störungen verursachen; in diesem Fall kann vom Betreiber verlangt werden, angemessene Maßnahmen zu ergreifen und dafür aufzukommen.”

Deutschland: Einhaltung des Gesetzes über die elektromagnetische Verträglichkeit von Geräten

Dieses Produkt entspricht dem “Gesetz über die elektromagnetische Verträglichkeit von Geräten (EMVG)”. Dies ist die Umsetzung der EU-Richtlinie 2004/108/EG in der Bundesrepublik Deutschland.

Zulassungsbescheinigung laut dem Deutschen Gesetz über die elektromagnetische Verträglichkeit von Geräten (EMVG) (bzw. der EMC EG Richtlinie 2004/108/EG) für Geräte der Klasse A

Dieses Gerät ist berechtigt, in Übereinstimmung mit dem Deutschen EMVG das EG-Konformitätszeichen - CE - zu führen.

Verantwortlich für die Einhaltung der EMV Vorschriften ist der Hersteller:

International Business Machines Corp.
New Orchard Road
Armonk, New York 10504
914-499-1900

Der verantwortliche Ansprechpartner des Herstellers in der EU ist:

IBM Deutschland GmbH
Technical Regulations, Abteilung M372
IBM-Allee 1, 71139 Ehningen, Germany
Telephone: +49 7032 15 2941
Email: lugi@de.ibm.com

Generelle Informationen:

Das Gerät erfüllt die Schutzanforderungen nach EN 55024 und EN 55022 Klasse A.

Japan VCCI Class A statement

この装置は、クラス A 情報技術装置です。この装置を家庭環境で使用すると電波妨害を引き起こすことがあります。この場合には使用者が適切な対策を講ずるよう要求されることがあります。 VCCI-A

This is a Class A product based on the standard of the Voluntary Control Council for Interference (VCCI). If this equipment is used in a domestic environment, radio interference may occur, in which case the user may be required to take corrective actions.

Japan Electronics and Information Technology Industries Association (JEITA) statement

高調波ガイドライン準用品

Japan Electronics and Information Technology Industries Association (JEITA) Confirmed Harmonics Guidelines with Modifications (products greater than 20 A per phase)

Korea Communications Commission (KCC) statement

이 기기는 업무용(A급)으로 전자파적합기기로서 판매자 또는 사용자는 이 점을 주의하시기 바라며, 가정외의 지역에서 사용하는 것을 목적으로 합니다.

This is electromagnetic wave compatibility equipment for business (Type A). Sellers and users need to pay attention to it. This is for any areas other than home.

Russia Electromagnetic Interference (EMI) Class A statement

ВНИМАНИЕ! Настоящее изделие относится к классу А.
В жилых помещениях оно может создавать радиопомехи, для снижения которых необходимы дополнительные меры

People's Republic of China Class A electronic emission statement

中华人民共和国“A类”警告声明

声 明

此为A级产品，在生活环境中，该产品可能会造成无线电干扰。在这种情况下，可能需要用户对其干扰采取切实可行的措施。

Taiwan Class A compliance statement

警告使用者:
這是甲類的資訊產品，在居住的環境中使用時，可能會造成射頻干擾，在這種情況下，使用者會被要求採取某些適當的對策。

Index

A

accessible documentation 562
accessing the IMM2 43
activity LED 10
adapter-retention assembly
  installing 493
  removing 492
adapters and UEFI drivers, Setup utility 26
Advanced Settings Utility (ASU) 32
array, SAS 523
assistance, getting 555
Attention notice, meaning 4
Australia Class A statement 563

B

base assembly
  installing 532
bezel
  installing 495
  removing 495
boot manager, Setup utility 26
Boot Selection Menu program 32
button, power 10

C

Cannot communicate with a compute node 459
Cannot communicate with the CMM 460
Cannot communicate with the I/O module 460
Cannot communicate with the management node 459
cannot connect during initial setup, troubleshooting 460
Cannot log in to the CMM 463
Cannot log in to the I/O module 463
Cannot log in to the management node 463
Cannot log in, troubleshooting 463
Cannot ping the CMM, troubleshooting 463
Cannot ping the I/O module, troubleshooting 466
Cannot ping the management node, troubleshooting 468, 471
Caution notice, meaning 4
chassis bulkhead
  installing 534
  removing 533
chassis management module 6
chassis, support for 1
check log LED 10
China Class A electronic emission statement 565
Class A electronic emission notice 562
CMM cannot ping the CMM 465
CMOS battery 16
  installing 497
  removing 496
collecting service data 485
commands on USB interface preference, Setup utility 26
components
  compute node , removing and replacing 487
  illustrated 9
  returning 488
  system board 16
compute node
  installing 490
  parts list 51
  removing 489
compute node cover
  installing 500
  removing 498
compute node start problems 459
configuration
  minimum 484
  updating 489
configuration summary, viewing 44
configuring
  compute node 25
  LAN over USB manually 48
  RAID array 35
configuring a RAID array 35
connectivity problems 459
connectors, system board 16
console breakout cable 13
contamination, particulate and gaseous 561
controller
  Ethernet 6
  memory 6
  video 6
cover
  installing 500
  removing 498
creating a personalized support web page 557
CRUs, Tier 1, removing and replacing 492
CRUs, Tier 2, removing and replacing 529
custom support web page 557

D

Danger notice, meaning 4
device drivers, updating 23
device, returning 488
devices and I/O ports, Setup utility 26
diagnostic tools 57
dimensions, IBM Flex System x440 Compute Node 4
DIMM
  installing 502
  removing 501
DIMM *(continued)*
  specifications 4
DIMM connectors 16
disabling LAN over USB interface 50
DMI/SMBIOS data, updating
  locally: keyboard controller style 33
  locally: LAN over USB 33
  remotely over a LAN 34
documentation
  using 556
Documentation Browser
  requirements 3
  using 3
documentation CD 3
documentation format 562
documentation, related 2
drive
  option, SAS 523
  option, SATA 523
DSA
  messages 457
    DSA 457
  microprocessor test 457
  running 66
  text messages 66
  viewing test results 67
DSA diagnostics
  overview 66
DSA log 67
DSA, sending data to IBM 556
Dynamic system analysis diagnostics
  See DSA

E

electrical equipment, servicing vii
electronic emission Class A notice 562
Electronic emission notices 562
Electronic Service Agent (ESA) 485
error codes 67
  IMM 67
  IMM2 67
  UEFI diagnostic codes 441
error symptoms
  hard disk drive 475
  software 483
errors
  201-811-xxx 458
  201-812-xxx 458
  201-815-xxx 458
  201-818-xxx 458
  201-819-xxx 458
  201-877-xxx 458
  201-878-xxx 458
  201-885-xxx 458
  201-886-xxx 458
  201-894-xxx 458
  201-899-xxx 458
  201-901-xxx 458
  210-000-000 458
  215-000-xxx 458

© Copyright IBM Corp. 2012

errors *(continued)*
215-801-xxx 458
215-802-xxx 458
215-803-xxx 458
215-901-xxx 458
215-902-xxx 458
215-903-xxx 458
215-904-xxx 458
connectivity 459
Ethernet device error codes 458
hard disk drive self tests
217-000-000 458
217-800-xxx 458
217-900-xxx 458
memory 478
memory self tests 458
observable problems 479
optical drive self tests 458
software 483
Ethernet controller 6
Ethernet device error codes
405-002-xxx 458
405-003-xxx 458
405-903-xxx 458
405-904-xxx 458
European Union EMC Directive conformance statement 563
event log
IMM2 63
viewing without restarting compute node 64
event logs 67

F

fabric connector
installing 538
location 16
removing 537
fault LED 10
FCC Class A notice 562
features
ServerGuide 40
features, compute node 6
field replaceable unit (FRU) 487
filler, node bay 490
firmware
recovering from update failure 24
updating 23
Force legacy video on boot, Setup utility 26
front handle
installing 518
removing 517

G

gaseous contamination 561
Germany Class A statement 563
getting help 556
guidelines
installation 487
servicing electrical equipment vii
system reliability 487
trained service technicians vi

H

handle, front
installing 518
removing 517
hard disk drive
problems 475
specifications 6
support 6
hard disk drive backplane
installing 521
removing 519
hard disk drive cage
installing 536
removing 535
hard disk drives
hot swap, installing 523
specifications 6
support 6
hardware and software requirements 3
hardware service and support telephone numbers 557
HDD backplane connector 16
heat sink
installing 542
removing 539
thermal grease 551
help
getting 555
help, sending diagnostic data to IBM 556
help, World Wide Web 556
host server startup sequence, changing 44
hot-swap hard disk device
SAS hard disk drive 523
SATA hard disk drive 523
hot-swap hard disk drive
installing 523
removing 522
hot-swap hard disk drive backplane
installing 521
removing 519
hot-swap hard disk drive cage
removing 535

I

I/O expansion adapter
installing 525
removing 524
I/O expansion connectors 16
IBM Flex System x440 Compute Node
dimensions 4
specifications 4
weight 4
IBM Taiwan product service 557
identify LED 10
IMM2
accessing 48
action descriptions 44
clearing the system event log 26
IP addresses, LAN over USB 48
reset to defaults 26
self-test error codes 458
Setup utility 26
IMM2 *(continued)*
system event log, viewing through Setup utility 64
using 43
viewing from Setup utility 64
viewing the system event log 26
IMM2 self test error codes
166-901-xxx 458
166-902-xxx 458
166-903-xxx 458
166-904-xxx 458
166-905-xxx 458
166-906-xxx 458
166-907-xxx 458
166-908-xxx 458
166-909-xxx 458
166-910-xxx 458
166-911-xxx 458
166-912-xxx 458
Important notice, meaning 4
important notices 560
Industry Canada Class A emission compliance statement 563
information center 556
inspecting for unsafe conditions vi
installation guidelines 487
installing
bezel 495
compute node 490
hot-swap hard disk drives 523
optional devices 487
SAS hard disk drive 523
SATA hard disk drive 523
installing an optional device 487
integrated management module *See* IMM2
intermittent connectivity problems 477
intermittent problems 476
IP address, obtaining for Web interface 43
IP addresses, LAN over USB 48

J

Japan Electronics and Information Technology Industries Association statement 565
Japan VCCI Class A statement 564
Japan Voluntary Control Council for Interference Class A statement 564
JEITA statement 565
jumpers, system board 16

K

KCS address, IMM2 48
keyboard controller style address, IMM2 48
Korea Communications Commission statement 565

L

LAN over USB
configuring manually 48
conflicts 50

LAN over USB *(continued)*
disabling interface 50
IP addresses 48
Linux driver installation 49
resolving conflicts 50
Windows driver installation 48
LEDs
activity 10
check log 10
CMOS battery error 18
DIMMs 18
fault 10
I/O expansion adapter 18
identify 10
microprocessor 18
power 10
SAS backplane 18
system board 18
viewing 57
legacy support, Setup utility 26
legacy Thunk support, Setup utility 26
light path diagnostics 57
light path diagnostics panel 18
installing 527
removing 526
light path diagnostics, viewing 57
Linux driver, LAN over USB 49
load-sharing
power throttling 6
Logic Configuration Utility, LSI 36
LSI Logic Configuration Utility program 36

M

major components
system board 9
memory
specifications 4
memory mirroring 502
memory module
installing 502
removing 501
specifications 6
memory problems 478
memory, Setup utility 26
messages
IMM 67
microprocessor test, DSA 457
UEFI diagnostic codes 441
microprocessor
installing 542
removing 539
specifications 4
thermal grease 551
microprocessor connector 16
microprocessor test error codes 457
microprocessor-retention assembly
installing 553
removing 552
minimum configuration 484
Multiple nodes cannot ping the CMM 464
Multiple nodes cannot ping the I/O module 467
Multiple nodes cannot ping the management node 469, 471, 473, 475
Multiple nodes cannot ping the management node in a different chassis 470, 474

N

network configuration, Setup utility 26
network, Setup utility 26
New Zealand Class A statement 563
node bay filler 490
NOS installation
without ServerGuide 41
notes, important 560
notices 559
electronic emission 562
FCC, Class A 562

O

observable problems 479
obtaining IP address for Web interface 43
one compute node experiences a sudden loss of connectivity 462
one compute node is unable to connect during the initial setup 461
one or more compute nodes is unable to communicate with SAN 460
operating modes, Setup utility 26
operating system
installing 39, 40
operating system installation
with ServerGuide 41
optional device and FRU installation problems 481
optional devices, installing 487

P

particulate contamination 561
parts listing 51
People's Republic of China Class A electronic emission statement 565
performance problems 481
POST
event viewer 26
POST event log 67
POST watchdog timer, Setup utility 26
power
throttling 6
power button 10
power LED 10
power-on problems 482
power, Setup utility 26
problems
compute node start 459
connectivity 459
hard disk drive 475
intermittent 476
intermittent connectivity 477
memory 478
observable problems 479
optional device and FRU installation 481
performance 481
power-on 482
problems *(continued)*
software 483
undetermined 484
processors, Setup utility 26
product service, IBM Taiwan 557
publications CD 3
publications, related 2
PXE Boot Agent 44
PXE boot protocol, setting 31

R

reboot system on NMI, Setup utility 26
redundant array of independent disks (RAID)
SAS array 523
rehook INT, Setup utility 26
related documentation 2
reliability
features 9
RAS features 9
removing
bezel 495
compute node 489
front handle 517
hot-swap hard disk drive 522
removing and replacing compute node components 487
removing and replacing CRUs 492, 529
replacing
thermal grease 551
requirements
hardware 3
hardware and software 3
software 3
returning a device or component 488
RFID tag 1
Russia Class A electromagnetic interference statement 565
Russia Electromagnetic Interference (EMI) Class A statement 565

S

safety v
safety statements v, viii
SAS array, type supported 523
SAS hard disk drive
hot-swap hard disk device 523
installing 523
SATA hard disk drive
hot-swap hard disk device 523
installing 523
SCSI 523
sending diagnostic data to IBM 556
Serial Attached SCSI (SAS)
hot-swap hard disk drive
installing 523
removing 522
ServerGuide
features 40
using to install operating system 41
ServerGuide CD 6
service and support
before you call 555
hardware 557

service and support *(continued)*
software 557
Service and Support Manager 485
service bulletins 57
servicing electrical equipment vii
setting the PXE boot protocol 31
setting up the LAN-on-motherboard (LOM) feature 36
Setup utility 42
menu 26
overview 26
Single node cannot ping the CMM 464
Single node cannot ping the I/O module 466
Single node cannot ping the management node 468, 471
Single node cannot ping the management node, different chassis 468, 472
SMBIOS data, updating
locally: keyboard controller style 33
locally: LAN over USB 33
remotely over a LAN 34
software problems 483
software service and support telephone numbers 557
specifications
IBM Flex System x440 Compute Node 4
start options, Setup utility 26
starting the compute node 13
startup sequence, changing 44
static electricity 488
static-sensitive devices, handling 488
stopping the compute node 15
storage drive
problems 475
support web page, custom 557
switches, system board 18
system board
connectors 16
jumpers 16
layouts 16
LEDs 18
switches 18
system event log 67
system event logs, Setup utility 26
system information, Setup utility 26
system reliability guidelines 487
system security, Setup utility 26
system settings, Setup utility 26
system summary, Setup utility 26
system-board assembly
components 9
removing 530
systems management
chassis management module 6
IBM Flex System Manager management software 6

T

Taiwan Class A compliance statement 565
telecommunication regulatory statement 562
thermal grease, replacing 551
Tier 1 CRU 487
Tier 1 CRUs, removing and replacing 492
Tier 2 CRU 487
Tier 2 CRUs, removing and replacing 529
TPM
Setup utility 26
trademarks 559
trained service technicians, guidelines vi
troubleshooting 57
service bulletins 57
Troubleshooting
cannot communicate with a compute node 459
troubleshooting tables 459
Troubleshooting, cannot communicate with the CMM 460
Troubleshooting, cannot communicate with the I/O module 460
Troubleshooting, cannot communicate with the management node 459
troubleshooting, cannot connect during initial setup 460
Troubleshooting, cannot log in 463
Troubleshooting, cannot log in to the CMM 463
Troubleshooting, cannot log in to the I/O module 463
Troubleshooting, cannot log in to the management node 463
Troubleshooting, cannot ping the CMM 463
Troubleshooting, cannot ping the I/O module 466
Troubleshooting, cannot ping the management node 468, 471
Troubleshooting, CMM cannot ping the CMM 465
Troubleshooting, multiple nodes cannot ping the CMM 464
Troubleshooting, multiple nodes cannot ping the I/O module 467
Troubleshooting, multiple nodes cannot ping the management node 469, 471, 473, 475
Troubleshooting, multiple nodes cannot ping the management node in a different chassis 470, 474
troubleshooting, one compute node experiences a sudden loss of connectivity 462
troubleshooting, one compute node is unable to connect during the initial setup 461
troubleshooting, one or more compute nodes is unable to communicate with SAN 460
Troubleshooting, single node cannot ping the CMM 464
Troubleshooting, single node cannot ping the I/O module 466
Troubleshooting, single node cannot ping the management node 468, 471
Troubleshooting, single node cannot ping the management node, different chassis 468, 472
troubleshooting, two or more compute nodes are unable to communicate during initial setup 462
troubleshooting, two or more compute nodes experience a sudden loss of connectivity 463
trusted platform module, Setup utility 26
turning off the compute node 15
turning on the compute node 13
two or more compute nodes are unable to communicate during initial setup 462
two or more compute nodes experience a sudden loss of connectivity 463

U

UEFI diagnostic codes 441
UEFI drivers, Setup utility 26
UEFI firmware
recovering from update failure 24
updating 23
updating using IBM Flex System Manager Chassis Manager 23
updating using IBM ToolsCenter Bootable Media Creator 23
updating using UpdateXpress 23
unable to communicate 459
undetermined problems 484
United States electronic emission Class A notice 562
United States FCC Class A notice 562
unsafe conditions, inspecting for vi
updating
configuration 489
device drivers 23
firmware 23
USB flash drive
installing 528
removing 528
user security, Setup utility 26

V

viewing DSA test results 67
Virtual Light Path 44

W

Web interface
logging on to 44
obtaining IP address 43
weight, IBM Flex System x440 Compute Node 4
Windows driver, LAN over USB 48

Part Number: 81Y1144

Printed in USA

(1P) P/N: 81Y1144