Acer LCD Monitor

User's Guide

Copyright © 2008. Acer Incorporated.
All Rights Reserved.

Acer LCD Monitor User's Guide
Original Issue: 7/2008

Changes may be made periodically to the information in this publication without obligation to notify any person of such revisions or changes. Such changes will be incorporated in new editions of this manual or supplementary documents and publications. This company makes no representations or warranties, either expressed or implied, with respect to the contents hereof and specifically disclaims the implied warranties of merchantability or fitness for a particular purpose.

Record the model number, serial number, purchase date and place of purchase information in the space provided below. The serial number and model number are recorded on the label affixed to your computer. All correspondence concerning your unit should include the serial number, model number and purchase information.

No part of this publication may be reproduced, stored in a retrieval system, or transmitted, in any form or by any means, electronically, mechanically, by photocopy, recording or otherwise, without the prior written permission of Acer Incorporated.

Acer LCD Monitor User's Guide

Model number: _____

Serial number: _____

Date of purchase: _____

Place of purchase: _____

Acer and the Acer logo are registered trademarks of Acer Incorporated. Other companies' product names or trademarks are used herein for identification purposes only and belong to their respective companies.

Special notes on LCD monitors

The following are normal with the LCD monitor and do not indicate a problem.

- Due to the nature of the fluorescent light, the screen may flicker during initial use. Turn off the power switch and then turn it on again to make sure the flicker disappears.
- You may find slightly uneven brightness on the screen depending on the desktop pattern you use.
- The LCD screen has 99.99% or more effective pixels. It may include blemishes of 0.01% or less such as a missing pixel or a pixel lit all the time.
- Due to the nature of the LCD screen, an afterimage of the previous screen may remain after switching the image, when the same image is displayed for hours. In this case, the screen is recovered slowly by changing the image or turning off the power switch for a few hours.

Information for your safety and comfort

Safety instructions

Read these instructions carefully. Keep this document for future reference. Follow all warnings and instructions marked on the product.

Cleaning your monitor

Please carefully follow these guidelines when cleaning the monitor:

- Always unplug the monitor before cleaning.
- Use a soft cloth to wipe the screen and cabinet front and sides.

Accessibility

Be sure that the power outlet you plug the power cord into is easily accessible and located as close to the equipment operator as possible. When you need to disconnect power from the equipment, be sure to unplug the power cord from the electrical outlet.

Safe listening

To protect your hearing, follow these instructions.

- Gradually increase the volume until you can hear it clearly and comfortably and without distortion.
- After setting the volume level, do not increase it after your ears have adjusted.
- Limit the amount of time listening to music at high volume.
- Avoid turning up the volume to block out noisy surroundings.
- Turn the volume down if you can't hear people speaking near you.

Warnings

- Do not use this product near water.
- Do not place this product on an unstable cart, stand or table. If the product falls, it could be seriously damaged.
- Slots and openings are provided for ventilation to ensure reliable operation of the product and to protect it from overheating. These openings must not be blocked or covered. The openings should never be blocked by placing the product on a bed, sofa, rug or other similar surface. This product should never be placed near or over a radiator or heat register, or in a built-in installation unless proper ventilation is provided.
- Never push objects of any kind into this product through cabinet slots as they may touch dangerous voltage points or short-out parts that could result in a fire or electric shock. Never spill liquid of any kind onto or into the product.
- To avoid damage of internal components and to prevent battery leakage, do not place the product on a vibrating surface.
- Never use it under sporting, exercising, or any vibrating environment which will probably cause unexpected short current or damage internal devices.

Using electrical power

- This product should be operated from the type of power indicated on the marking label. If you are not sure of the type of power available, consult your dealer or local power company.
- Do not allow anything to rest on the power cord. Do not locate this product where people will walk on the cord.
- If an extension cord is used with this product, make sure that the total

ampere rating of the equipment plugged into the extension cord does not exceed the extension cord ampere rating. Also, make sure that the total rating of all products plugged into the wall outlet does not exceed the fuse rating.

- Do not overload a power outlet, strip or receptacle by plugging in too many devices. The overall system load must not exceed 80% of the branch circuit rating. If power strips are used, the load should not exceed 80% of the power strip's input rating.
- This product's power cord is equipped with a three-wire grounded plug. The plug only fits in a grounded power outlet. Make sure the power outlet is properly grounded before inserting the power cord plug. Do not insert the plug into a non-grounded power outlet. Contact your electrician for details.

Warning! The grounding pin is a safety feature. Using a power outlet that is not properly grounded may result in electric shock and/or injury.

Note: The grounding pin also provides good protection from unexpected noise produced by other nearby electrical devices that may interfere with the performance of this product.

- Use the product only with the supplied power supply cord set. If you need to replace the power cord set, make sure that the new power cord meets the following requirements: detachable type, UL listed/CSA certified, type SPT-2, rated 7 A 125 V minimum, VDE approved or its equivalent, 4.6 meters (15 feet) maximum length.

Product servicing

Do not attempt to service this product yourself, as opening or removing covers may expose you to dangerous voltage points or other risks. Refer all servicing to qualified service personnel.

Unplug this product from the wall outlet and refer servicing to qualified service personnel when:

- the power cord or plug is damaged, cut or frayed
- liquid was spilled into the product
- the product was exposed to rain or water
- the product has been dropped or the case has been damaged
- the product exhibits a distinct change in performance, indicating a need for service
- the product does not operate normally after following the operating instructions

Note: Adjust only those controls that are covered by the operating instructions, since improper adjustment of other controls may result in damage and will often require extensive work by a qualified technician to restore the product to normal condition.

Potentially explosive environments

Switch off your device in any area with a potentially explosive atmosphere and obey all signs and instructions. Potentially explosive atmospheres include areas where you would normally be advised to turn off your vehicle engine. Sparks in such areas could cause an explosion or fire resulting in bodily injury or even death. Switch off the device near gas pumps at service stations. Observe restrictions on the use of radio equipment in fuel depots, storage and distribution areas; chemical plants; or where blasting operations are in progress. Areas with a potentially explosive atmosphere are often, but not always, marked. They include below deck on boats, chemical transfer or storage facilities, vehicles using liquefied petroleum gas (such as propane or butane), and areas where the air contains chemicals or particles such as grain, dust or metal powders.

Additional safety information

Your device and its enhancements may contain small parts. Keep them out of the reach of small children.

IT Equipment Recycling Information

Acer is strongly committed to environmental protection and views recycling, in the form of salvaging and disposal of used equipment, as one of the company's top priorities in minimizing the burden placed on the environment.

We at Acer are very conscious of the environmental effects of our business and strive to identify and provide the best working procedures to reduce the environmental impact of our products.

For more information and help when recycling, please go to this website:
http://www.acer-group.com/public/Sustainability/sustainability01.htm

Visit www.acer-group.com for further information on the features and benefits of our other products.

Disposal instructions

Do not throw this electronic device into the trash when discarding.
To minimize pollution and ensure utmost protection of the global environment, please recycle. For more information on the Waste from Electrical and Electronics Equipment (WEEE) regulations, visit
http://global.acer.com/about/sustainability.htm

Tips and information for comfortable use

Computer users may complain of eyestrain and headaches after prolonged use. Users are also at risk of physical injury after long hours of working in front of a computer. Long work periods, bad posture, poor work habits, stress, inadequate working conditions, personal health and other factors greatly increase the risk of physical injury.

Incorrect computer usage may lead to carpal tunnel syndrome, tendonitis, tenosynovitis or other musculoskeletal disorders. The following symptoms may appear in the hands, wrists, arms, shoulders, neck or back:

- numbness, or a burning or tingling sensation
- aching, soreness or tenderness
- pain, swelling or throbbing
- stiffness or tightness
- coldness or weakness

If you have these symptoms, or any other recurring or persistent discomfort and/or pain related to computer use, consult a physician immediately and inform your company's health and safety department.

The following section provides tips for more comfortable computer use.

Finding your comfort zone

Find your comfort zone by adjusting the viewing angle of the monitor, using a footrest, or raising your sitting height to achieve maximum comfort. Observe the following tips:

- refrain from staying too long in one fixed posture
- avoid slouching forward and/or leaning backward
- stand up and walk around regularly to remove the strain on your leg muscles

Taking care of your vision

Long viewing hours, wearing incorrect glasses or contact lenses, glare, excessive room lighting, poorly focused screens, very small typefaces and low-contrast displays could stress your eyes. The following sections provide suggestions on how to reduce eyestrain.

Eyes

- Rest your eyes frequently.
- Give your eyes regular breaks by looking away from the monitor and focusing on a distant point.
- Blink frequently to keep your eyes from drying out.

Display

- Keep your display clean.
- Keep your head at a higher level than the top edge of the display so your eyes point downward when looking at the middle of the display.
- Adjust the display brightness and/or contrast to a comfortable level for enhanced text readability and graphics clarity.
- Eliminate glare and reflections by:
    - placing your display in such a way that the side faces the window or any light source
    - minimizing room light by using drapes, shades or blinds
    - using a task light
    - changing the display's viewing angle
    - using a glare-reduction filter
    - using a display visor, such as a piece of cardboard extended from the display's top front edge
- Avoid adjusting your display to an awkward viewing angle.
- Avoid looking at bright light sources, such as open windows, for extended periods of time.

Developing good work habits

Develop the following work habits to make your computer use more relaxing and productive:

- Take short breaks regularly and often.
- Perform some stretching exercises.
- Breathe fresh air as often as possible.
- Exercise regularly and maintain a healthy body.

Acer Incorporated
8F, 88, Sec. 1, Hsin Tai Wu Rd., Hsichih
Taipei Hsien 221, Taiwan

Tel : 886-2-2696-1234
Fax : 886-2-2696-3535

Declaration of Conformity

We,

Acer Incorporated
8F, 88, Sec. 1, Hsin Tai Wu Rd., Hsichih, Taipei Hsien 221, Taiwan
Contact Person: Mr. Easy Lai, E-mail: easy_lai@acer.com.tw

And,

Acer Europe SA
Via Cantonale, Centro Galleria 2 6928 Manno Switzerland

Hereby declare that:

Product:	**LCD Monitor**
Trade Name:	**Acer**
Model Number:	**V223HQL/V213HL**
SKU Number:	**V223HQL/V213HL********(“*” = 0~9, a ~ z, or A ~ Z)**

Is compliant with the essential requirements and other relevant provisions of the following EC directives, and that all the necessary steps have been taken and are in force to assure that production units of the same product will continue comply with the requirements.

EMC Directive 2004/108/EC as attested by conformity with the following harmonized standards:

-. EN55022, AS/NZS CISPR22 Class B.
-. EN55024
-. EN61000-3-2, Class D
-. EN61000-3-3

Low Voltage Directive 2006/95/EC as attested by conformity with the following harmonized standard:

-. EN60950-1

RoHS Directive 2002/95/EC on the Restriction of the Use of certain Hazardous Substances in Electrical and Electronic Equipment:

-. The maximum concentration values of the restricted substances by weight in homogenous material are:

Lead	0.1%	Polybrominated Biphenyls (PBB’s)	0.1%
Mercury	0.1%	Polybrominated Diphenyl Ethers (PBDE’s)	0.1%
Hexavalent Chromium	0.1%	Cadmium	0.01%

Directive 2009/125/EC with regard to establishing a framework for the setting of ecodesign requirements for energy-related product.

Year to begin affixing CE marking 2010.

Easy Lai

Easy Lai /Manager
Regulation, Acer Inc.

Jun. 3, 2010
Date

Acer America Corporation
333 West San Carlos St., San Jose
CA 95110, U. S. A.
Tel : 254-298-4000
Fax : 254-298-4147
www.acer.com

Federal Communications Commission
Declaration of Conformity

This device complies with Part 15 of the FCC Rules. Operation is subject to the following two conditions: (1) this device may not cause harmful interference, and (2) this device must accept any interference received, including interference that may cause undesired operation.

The following local Manufacturer /Importer is responsible for this declaration:

Product:	**LCD Monitor**
Model Number:	**V223HQL/V213HL**
SKU Number: **("*" = 0~9, a ~ z, or A ~ Z)**	**V223HQL/V213HL**********
Name of Responsible Party:	**Acer America Corporation**
Address of Responsible Party:	**333 West San Carlos St.** **San Jose, CA 95110** **U. S. A.**
Contact Person:	**Acer Representative**
Phone No.:	**254-298-4000**
Fax No.:	**254-298-4147**

Special notes on LCD monitors iii
Information for your safety and comfort iii
Safety instructions iii
Cleaning your monitor iii
Connecting/disconnecting the device iii
Accessibility iv
Safe listening iv
Warnings iv
Using electrical power iv
Product servicing v
Additional safety information vi
IT equipment recycling information vi
Disposal instructions vii
Tips and information for comfortable use viii
Federal Communications Commission
Declaration of Conformity xi
Unpacking 1
Attaching/removing the base 2
Screen position adjustment 2
Connecting the power cord 3
Power saving 3
Display Data Channel (DDC) 3
Connector pin assignment 4
Standard timing table 6
Installation 7
User controls 8
How to adjust a setting 9
Acer eColor Management 10
User 11
Troubleshooting 13
VGA mode 13
DVI mode 14

Unpacking

Please check that the following items are present when you unpack the box, and save the packing materials in case you need to ship or transport the monitor in the future.

LCD monitor	User's guide	Quick start guide
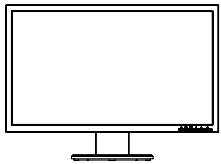		
D-sub cable (Optional)	**DVI cable (Optional)**	**AC power cord**
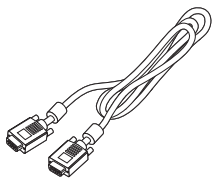	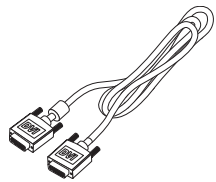	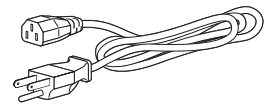
Audio cable (Optional)		
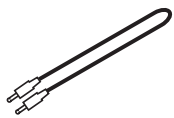		

Attaching/removing the base

Attaching:
Align the release button on the bottom of the monitor with the corresponding slots on the bottom of the base.

Removing:
Press the release button as indicated, then pull in the direction of the arrow to remove the base.

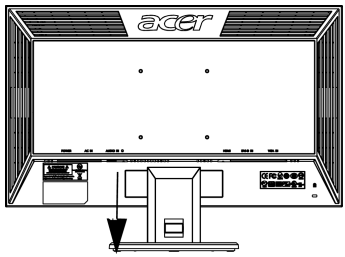

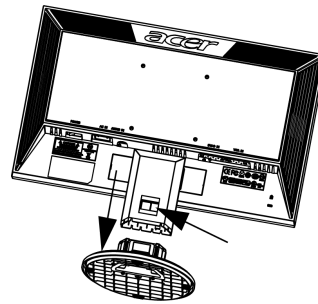

Screen position adjustment

To optimize the viewing position, you can adjust the monitor tilt by using both of your hands to hold the edges of the monitor as shown below.
The monitor can be adjusted to 15 degrees up or 5 degrees down.

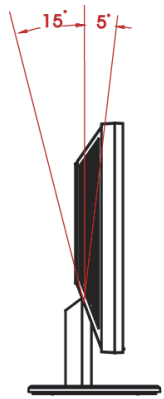

Connecting the power cord

- Check first to make sure that the power cord you use is the correct type required for your area.
- The monitor has a universal power supply that allows operation in either 100/120 V AC or 220/240 V AC voltage area. No user-adjustment is required.
- Plug one end of the power cord to the AC inlet, and plug the other end into an AC outlet.
- For units using 120 V AC:
  Use a UL-listed cord set, type SVT wire and plug rated 10 A/125 V.
- For units using 220/240 V AC:
  Use a cord set consisting of H05VV-F cord and plug rated 10 A/250 V. The cord set should have the appropriate safety approvals for the country in which the equipment will be installed.

Power saving

The monitor will be switched to "power saving" mode by the control signal from the display controller, as indicated by the amber-colored power LED.

Mode	LED light
On	Blue
Power saving	Amber

The power saving mode will be kept until a control signal has been detected or the keyboard or mouse is activated. The recovery time from "power saving" mode back to "on" is around 3 seconds.

Display Data Channel (DDC)

To make installation easier, so long as your system supports the DDC protocol, the monitor is able to plug-and-play. The DDC is a communication protocol through which the monitor automatically informs the host system about its capabilities; for example, supported resolutions and corresponding timing. The monitor supports the DDC2B standard.

Connector pin assignment

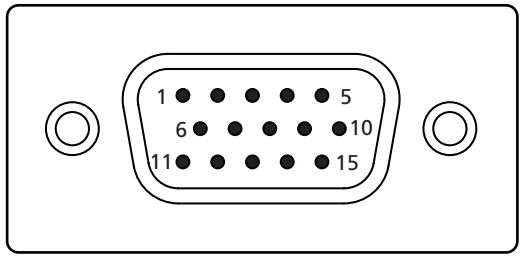

15-pin color display signal cable

PIN No.	Description	PIN No.	Description
1	Red	9	+5 V
2	Green	10	Logic ground
3	Blue	11	Monitor ground
4	Monitor ground	12	DDC-serial data
5	DDC-return	13	H-sync
6	R-ground	14	V-sync
7	G-ground	15	DDC-serial clock
8	B-ground		

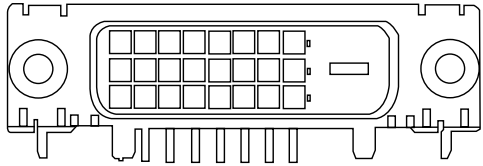

24-pin color display signal cable

PIN No.	Description	PIN No.	Description
1	TMDS data 2-	13	NC
2	TMDS data 2+	14	+5 V power
3	TMDS data 2/4 shield	15	GND (return for +5 V hsync.vsync)
4	NC	16	Hot-plug detection
5	NC	17	TMDS data 0-
6	DDC clock	18	TMDS data 0+
7	DDC data	19	TMDS data 0/5 shield
8	NC	20	NC
9	TMDS data 1-	21	NC
10	TMDS data 1+	22	TMDS clock shield
11	TMDS data 1/3 shield	23	TMDS clock+
12	NC	24	DDC TMDS clock-

Standard timing table

Mode		Resolution		
1	VGA	640 x 480	60	Hz
2	MAC	640 x 480	66.66	Hz
3	VESA	720 x 400	70	Hz
4	SVGA	800 x 600	56	Hz
5	SVGA	800 x 600	60	Hz
6	XGA	1024 x 768	60	Hz
7	XGA	1024 x 768	70	Hz
8	VESA	1152 x 864	75	Hz
9	SXGA	1280 x 1024	60	Hz
10	WXGA	1280 x 800	60	Hz
11	WXGA+	1440 x 900	60	Hz
12	UXGA	1920 x 1080	60	Hz
13	UXGA	1920 x 1080	60	Hz
14	UXGA	1920 x 1080	60	Hz

Installation

To install the monitor on your host system, please follow the steps below:

Steps

1 Connect the video cable

- a Make sure both the monitor and computer are switched off.
- b Connect the VGA video cable to the computer.
- c Connect the digital cable (only for dual-input models).
  - (1) Make sure both the monitor and computer are switched off.
  - (2) Connect one end of the 24-pin DVI cable to the back of the monitor and the other end to the computer's port.

2 Connect the power cord
Connect the power cord to the monitor, then to a properly grounded AC outlet.

3 Turn on the monitor and computer
Turn on the monitor first, then the computer. This sequence is very important.

4 If the monitor does not function properly, please refer to the troubleshooting section to diagnose the problem.

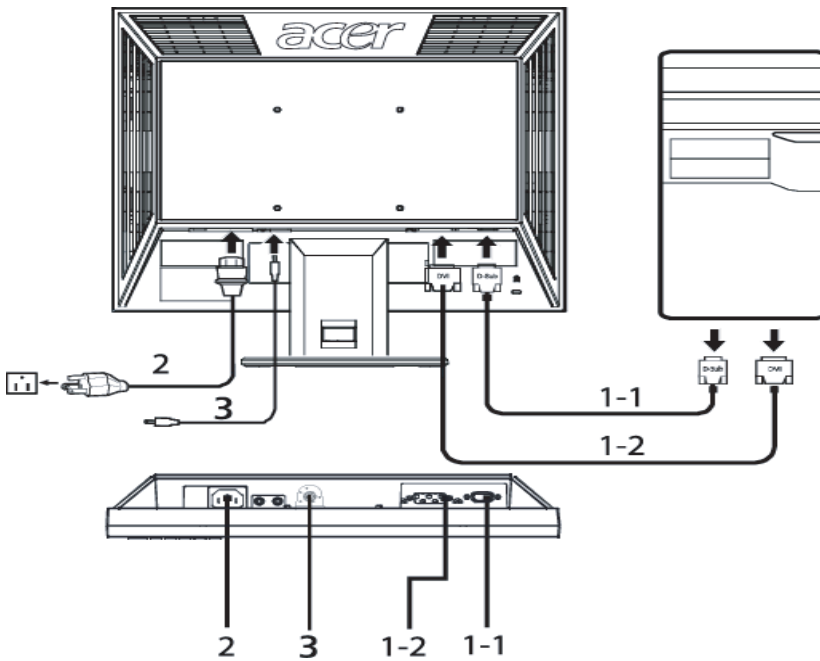

User controls

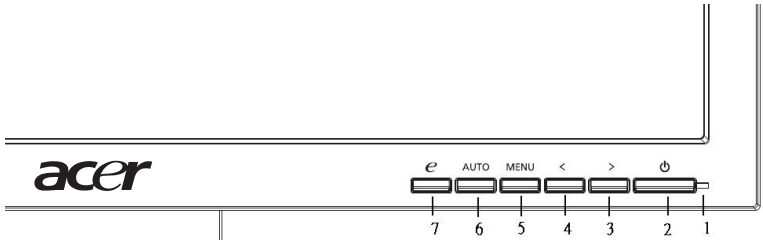

Front panel controls

1 **Power LED**: Lights up to indicate the power is turned on.

2 **Power Switch**: Turn the power on or off.

3.4 **< / >** : Press < or > to navigate to the desired function, press Enter to select the function. Press < or > to change the settings of the current function.

5 **Menu/Enter**: Activate the OSD menu when the OSD is off or activate / deactivate the adjustment function when the OSD is on.

6 **Auto adjust button/Exit**:

a. When the OSD menu is active, this button will act as the exit key (exit OSD menu).

b. When the OSD menu is inactive, press this button for two seconds to activate the Auto Adjustment function. The Auto Adjustment function is used to set the HPos, VPos, Clock and Focus.

7 **Empowering Key/Exit**:

a. When the OSD menu is active, this button will act as the exit key (exit OSD menu).

b. When the OSD menu is inactive, press this button to select scenario mode.

How to adjust a setting

1 Press the **Menu** button to activate the OSD window.

2 Press **<** or **>** to select the desired function.

3 Press the **Menu** button again to select the function that you want to adjust.

4 Press **<** or **>** to change the settings of the current function.

5 To exit and save, select the exit function. If you want to adjust any other function, repeat steps 2 to 4.

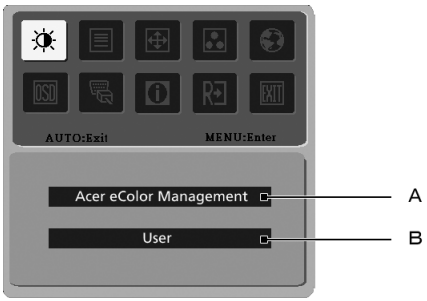

A. **Acer eColor Management:** If "Acer eColor Management" is selected, the Acer eColor Management OSD will appear.

B. **User:** If "User" is selected, the standard OSD will appear.

Acer eColor Management

Operation instructions

Step 1: Press " e " Key to open the Acer eColor Management OSD and access the scenario modes

Step 2: Press "◀" or "▶" to select the mode

Step 3: Press " AUTO " Key to confirm the mode and run Auto Adjust.

Features and Benefits

Main Menu icon	Sub Menu icon	Sub Menu item	Description
	N/A	User mode	User defined. Settings can be fine-tuned to suit any situation
	N/A	ECO mode	Adjusts the settings to reduce power consumption.
	N/A	Standard mode	Default Setting. Reflects native display capability
	N/A	Grahpic mode	Enhances colors and emphasize fine detail. Pictures and photographs appear in vibrant colors with sharp detail.
	N/A	Movie mode	Displays scenes in clearest detail. Presents great visuals, even in unsuitably-lit environments.

User

Main menu icon	Sub menu icon	Sub menu item	Description
		Contrast	Adjusts the contrast between the foreground and background of the screen image.
		Brightness	Adjusts the background brightness of the screen image.
		ACM	ACM (Adaptive Contrast Management) ACM On/Off switch, default **Off**.
		Focus	Adjusts picture focus (available in analog mode only).
		Clock	Adjusts the picture clock (available in analog mode only).
		H. Position	Adjusts the horizontal position (available in analog mode only).
		V. Position	Adjusts the vertical position (available in analog mode only).
	N/A	Warm	Sets the color temperature to warm white.
	N/A	Cool	Sets the color temperature to cool white.
		User/red	Adjusts red intensity.
		User/green	Adjusts green intensity.
		User/blue	Adjusts blue intensity.

Main menu icon	Sub menu icon	Sub menu item	Description
	N/A	English	Language selection.
	N/A	繁體中文	
		Deutsch	
		Français	
		Español	
		Italiano	
		简体中文	
		日本語	
		Suomi	EMEA version OSD only.
		Nederlands	
		Русский	
		Türkçe	
		Polski	
		Português	
		H. Position	Adjusts the horizontal position of the OSD.
		V. Position	Adjusts the vertical position of the OSD.
		OSD Timeout	Adjusts the OSD timeout.
	N/A	Input Source	Select input signal from D-Sub or DVI-D or HDMI
	N/A	Wide Mode	Select Wide mode setting for Full screen, Aspect ratio or 1:1 mode
	N/A	DDC/CI	Turns on/off DDC/CI support
	N/A	Information	Shows the resolution, H/V frequency, input port and serial number for current input.
	N/A	Reset	Clears Auto-configuration changes and sets the color temperature to warm.
	N/A	Exit	Saves user changes and closes the OSD.

Troubleshooting

Before sending your LCD monitor for servicing, please check the troubleshooting list below to see if you can self-diagnose the problem.

VGA mode

Problem	LED status	Remedy
No picture visible	Blue	Using the OSD, adjust brightness and contrast to maximum or reset to their default settings.
	Off	Check the power switch. Check if the power cord is properly connected to the monitor.
	Amber	Check if the video signal cable is properly connected at the back of monitor. Check if the computer system is switched on and in power saving/ standby mode.
Unstable picture		Check if the specification of graphics adapter and monitor is in compliance which may be causing the input signal frequency mismatch.
Abnormal picture	Image is missing, off-center, too large or too small on the screen.	Using the OSD, adjust focus, clock, H-position and V-position with non-standard signals. Check the display setting on your system. In case of a missing image, please select another resolution or vertical refresh rate. Wait for a few seconds after adjusting the size of the image before changing or disconnecting the signal cable or switching off the monitor.

DVI mode

Problem	LED status	Remedy
No picture visible	Blue	Using the OSD, adjust brightness and contrast to maximum or reset to their default settings.
	Off	Check the power switch. Check if the AC power cord is properly connected to the monitor.
	Amber	Check if the video signal cable is properly connected at the back of monitor. Check that the computer system is switched on and in power saving/ standby mode.