LEXMARK™

C950

User's Guide

December 2010 **www.lexmark.com**

Machine type(s):

5058

Model(s):

030

Contents

Safety information.....6

Learning about the printer.....8

Thank you for choosing this printer!.....8
Finding information about the printer.....8
Selecting a location for the printer.....9
Printer configurations.....11
Using the printer control panel.....13

Understanding the home screen.....14

Understanding the home screen.....14
Using the touch-screen buttons.....15

Setting up and using the home screen applications.....18

Customizing the home screen using the Embedded Web Server.....18
Using the home screen applications.....18
Configuring the home screen or idle screen.....19
Using Forms and Favorites.....20
Using Eco-Settings.....22
Using the Remote Operator Panel.....24
Exporting and importing a configuration using the Embedded Web Server.....25

Additional printer setup.....27

Turning on the printer.....27
Installing internal options.....28
Order of installation.....42
Installing optional trays.....43
Attaching cables.....45
Verifying printer setup.....46
Setting up the printer software.....47
Setting up wireless printing.....49
Installing the printer on a wired network.....53
Changing port settings after installing a new network Internal Solutions Port.....56
Setting up serial printing.....57

Minimizing your printer's environmental impact.....59
Saving paper and toner.....59
Saving energy.....60
Recycling.....63

Loading paper and specialty media.....64
Setting the paper size and type.....64
Configuring Universal paper settings.....64
Loading the standard or optional 520-sheet tray.....65
Loading the optional 850- and 1,150-sheet trays.....68
Loading the 2000-sheet high-capacity feeder.....70
Loading the multipurpose feeder.....72
Linking and unlinking trays.....75

Paper and specialty media guide.....78
Paper guidelines.....78
Storing paper.....81
Supported paper sizes, types, and weights.....82

Printing.....89
Printing a document.....89
Printing from a flash drive.....91
Printing specialty documents.....93
Printing confidential and other held jobs.....95
Printing information pages.....96
Canceling a print job.....97

Understanding printer menus.....99
Menus list.....99
Supplies menu.....100
Paper menu.....102
Reports menu.....113
Network/Ports menu.....114
Security menu.....127
Settings menu.....131
Help menu.....156

Securing the hard disk and other installed memory.....158
Statement of Volatility.....158
Erasing volatile memory.....158
Erasing non-volatile memory.....159
Erasing printer hard disk memory using the Embedded Web Server.....159
Configuring printer hard disk encryption using the Embedded Web Server.....160

Maintaining the printer.....161
Cleaning the exterior of the printer.....161
Cleaning the printhead lenses.....161
Storing supplies.....165
Checking the status of supplies.....165
Ordering supplies.....166
Replacing Supplies.....167
Moving the printer.....179

Administrative support.....180
Finding advanced networking and administrator information.....180
Using the Embedded Web Server.....180
Checking the virtual display.....180
Checking the status of the printer.....180
Setting up e-mail alerts.....181
Viewing reports.....181
Restoring factory default settings.....182

Clearing jams.....183
Avoiding jams.....183
Understanding jam numbers and locations.....183
201–202 paper jams.....184
203 paper jam.....186
230 paper jam.....188
231 paper jam.....188
24x paper jam.....191
250 paper jam.....193
281 paper jam.....193
4yy.xx paper jams.....195

455 staple jam.....199

Troubleshooting.....202

Checking an unresponsive printer.....202
Understanding printer messages.....202
Solving printing problems.....216
Solving home screen applications problems.....219
Solving option problems.....221
Solving paper feed problems.....224
Solving print quality problems.....225
Solving color quality problems.....237
Embedded Web Server does not open.....240
Contacting customer support.....240

Notices.....241

Product information.....241
Edition notice.....241
Power consumption.....245

Index.....256

Safety information

Connect the power cord to a properly grounded electrical outlet that is near the product and easily accessible.

Do not place or use this product near water or wet locations.

This product uses a ground fault circuit interrupter (GFCI). Monthly testing of the GFCI is recommended.

This product uses a printing process that heats the print media, and the heat may cause the media to release emissions. You must understand the section in your operating instructions that discusses the guidelines for selecting print media to avoid the possibility of harmful emissions.

CAUTION—POTENTIAL INJURY: The lithium battery in this product is not intended to be replaced. There is a danger of explosion if a lithium battery is incorrectly replaced. Do not recharge, disassemble, or incinerate a lithium battery. Discard used lithium batteries according to the manufacturer's instructions and local regulations.

CAUTION—HOT SURFACE: The inside of the printer might be hot. To reduce the risk of injury from a hot component, allow the surface to cool before touching.

CAUTION—POTENTIAL INJURY: The printer weight is greater than 18 kg (40 lb) and requires two or more trained personnel to lift it safely.

CAUTION—POTENTIAL INJURY: Before moving the printer, follow these guidelines to avoid personal injury or printer damage:

- Turn the printer off using the power switch, and then unplug the power cord from the wall outlet.
- Disconnect all cords and cables from the printer before moving it.
- Lift the printer off the optional drawer, and set it aside instead of trying to lift the drawer and printer at the same time.

  Note: Use the handholds located on both sides of the printer to lift it off the optional drawer.

Use only the power cord provided with this product or the manufacturer's authorized replacement.

CAUTION—POTENTIAL INJURY: To reduce risk of fire, use only the telecommunications (RJ-11) cord provided with this product or a UL Listed 26 AWG or larger replacement when connecting this product to the public switched telephone network.

CAUTION—SHOCK HAZARD: If you are accessing the system board or installing optional hardware or memory devices sometime after setting up the printer, then turn the printer off, and unplug the power cord from the wall outlet before continuing. If you have any other devices attached to the printer, then turn them off as well, and unplug any cables going into the printer.

CAUTION—SHOCK HAZARD: Make sure that all external connections (such as Ethernet and telephone system connections) are properly installed in their marked plug-in ports.

This product is designed, tested, and approved to meet strict global safety standards with the use of specific manufacturer's components. The safety features of some parts may not always be obvious. The manufacturer is not responsible for the use of other replacement parts.

CAUTION—POTENTIAL INJURY: Do not cut, twist, bind, crush, or place heavy objects on the power cord. Do not subject the power cord to abrasion or stress. Do not pinch the power cord between objects such as furniture and walls. If any of these things happen, a risk of fire or electrical shock results. Inspect the power cord regularly for signs of such problems. Remove the power cord from the electrical outlet before inspecting it.

Refer service or repairs, other than those described in the user documentation, to a professional service person.

CAUTION—SHOCK HAZARD: To avoid the risk of electric shock when cleaning the exterior of the printer, unplug the power cord from the wall outlet and disconnect all cables from the printer before proceeding.

CAUTION—SHOCK HAZARD: Do not use the fax feature during a lightning storm. Do not set up this product or make any electrical or cabling connections, such as the fax feature, power cord, or telephone, during a lightning storm.

CAUTION—TIPPING HAZARD: Floor-mounted configurations require additional furniture for stability. You must use either a printer stand or printer base if you are using a high-capacity input tray, a duplex unit and an input option, or more than one input option. If you purchased a multifunction printer (MFP) that scans, copies, and faxes, you may need additional furniture. For more information, contact the place where you purchased the printer.

CAUTION—POTENTIAL INJURY: To reduce the risk of equipment instability, load each paper drawer or tray separately. Keep all other drawers or trays closed until needed.

SAVE THESE INSTRUCTIONS.

Learning about the printer

Thank you for choosing this printer!

We've worked hard to make sure it will meet your needs.

To start using your new printer right away, use the setup materials that came with the printer, and then skim the *User's Guide* to learn how to perform basic tasks. To get the most out of your printer, read the *User's Guide* carefully, and make sure you check the latest updates on our Web site.

We're committed to delivering performance and value with our printers, and we want to make sure you're satisfied. If you do encounter any problems along the way, one of our knowledgeable support representatives will be delighted to help you get back on track fast. And if you find something we could do better, please let us know. After all, you are the reason we do what we do, and your suggestions help us do it better.

Finding information about the printer

What are you looking for?	Find it here
Initial setup instructions: • Connecting the printer • Installing the printer software	Setup documentation—The setup documentation came with the printer and is also available on the Lexmark Web site at **http://support.lexmark.com**.
Additional setup and instructions for using the printer: • Selecting and storing paper and specialty media • Loading paper • Configuring printer settings • Viewing and printing documents and photos • Setting up and using the printer software • Configuring the printer on a network (depending on your printer model) • Caring for and maintaining the printer • Troubleshooting and solving problems	*User's Guide*—The *User's Guide* is available on the *Software and Documentation* CD. For updates, check our Web site at **http://support.lexmark.com**.
Instructions for: • Installing the printer using Guided or Advanced wireless setup • Connecting the printer to an Ethernet or a wireless network • Troubleshooting printer connection problems	*Networking Guide*— Open the *Software and Documentation* CD, and then look for *Printer and Software Documentation* under the Pubs folder. From the list of publications, click the **Networking Guide** link.

What are you looking for?	Find it here
Help using the printer software	Windows or Mac Help—Open a printer software program or application, and then click **Help**. Click ? to view context-sensitive information. **Notes:** • The Help installs automatically with the printer software. • The printer software is located in the printer Program folder or on the desktop, depending on your operating system.
Latest supplemental information, updates, and technical support: • Documentation • Driver downloads • Live chat support • E-mail support • Telephone support	Lexmark Support Web site—**http://support.lexmark.com** **Note:** Select your country or region, and then select your product to view the appropriate support site. Support telephone numbers and hours of operation for your country or region can be found on the Support Web site or on the printed warranty that came with your printer. Record the following information (located on the store receipt and at the back of the printer), and have it ready when you contact support so they may serve you faster: • Machine Type number • Serial number • Date purchased • Store where purchased
Warranty information	Warranty information varies by country or region: • **In the US**—See the Statement of Limited Warranty included with this printer, or at **http://support.lexmark.com**. • **In other countries and regions**—See the printed warranty that came with your printer.

Selecting a location for the printer

CAUTION—POTENTIAL INJURY: The printer weight is greater than 18 kg (40 lb) and requires two or more trained personnel to lift it safely.

When selecting a location for the printer, leave enough room to open trays, covers, and doors. If you plan to install any options, then leave enough room for them too. It is important to:

- Set up the printer near a properly grounded and easily accessible electrical outlet.
- Make sure airflow in the room meets the latest revision of the ASHRAE 62 standard or the CEN Technical Committee 156 standard.
- Provide a flat, sturdy, and stable surface.

- Keep the printer:
  - Away from the direct airflow of air conditioners, heaters, or ventilators
  - Free from direct sunlight, humidity extremes, or temperature fluctuations
  - Clean, dry, and free of dust
- Allow the following recommended amount of space around the printer for proper ventilation:

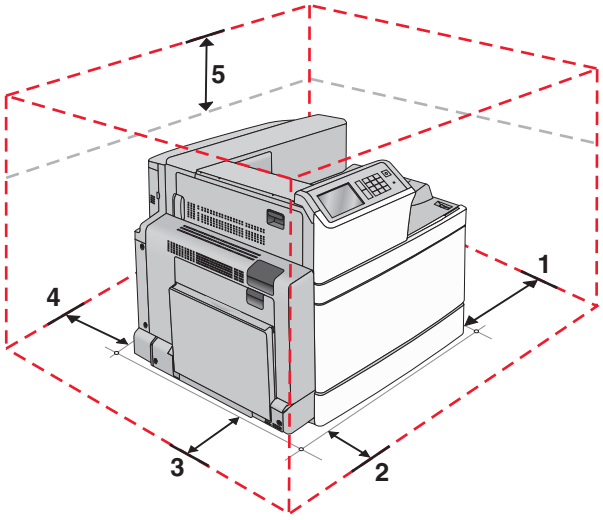

1	100 mm (4 in.)
2	610 mm (24 in.)
3	385 mm (15 in.)
4	100 mm (4 in.)
5	100 mm (4 in.)

Printer configurations

Basic model

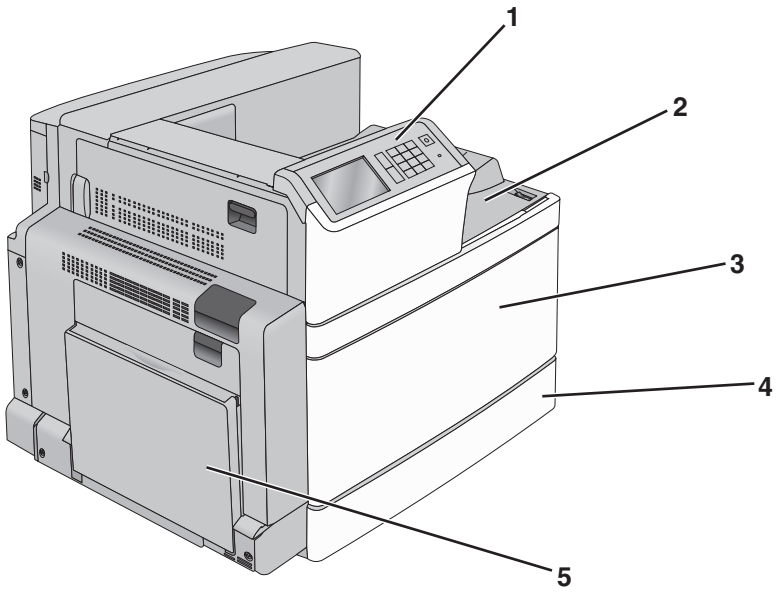

1	Printer control panel
2	Standard exit bin
3	Front door
4	Standard 520-sheet tray
5	Multipurpose feeder

Configured models

You can configure your basic printer by adding optional trays. A 2,000-sheet high-capacity feeder and a finisher bin can also be added.

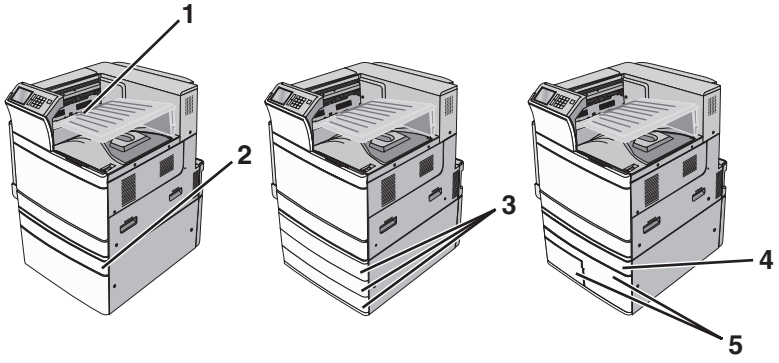

1	Exit tray 2 **Note:** Exit tray 2 is applicable to any configurations except when a finisher is installed.
2	Optional 520-sheet tray

3	Optional 520-sheet trays
4	Optional 520-sheet tray
5	2,000-sheet tandem-tray module • 850-sheet tray (Tray 3) • 1,150-sheet tray (Tray 4)

Fully configured model

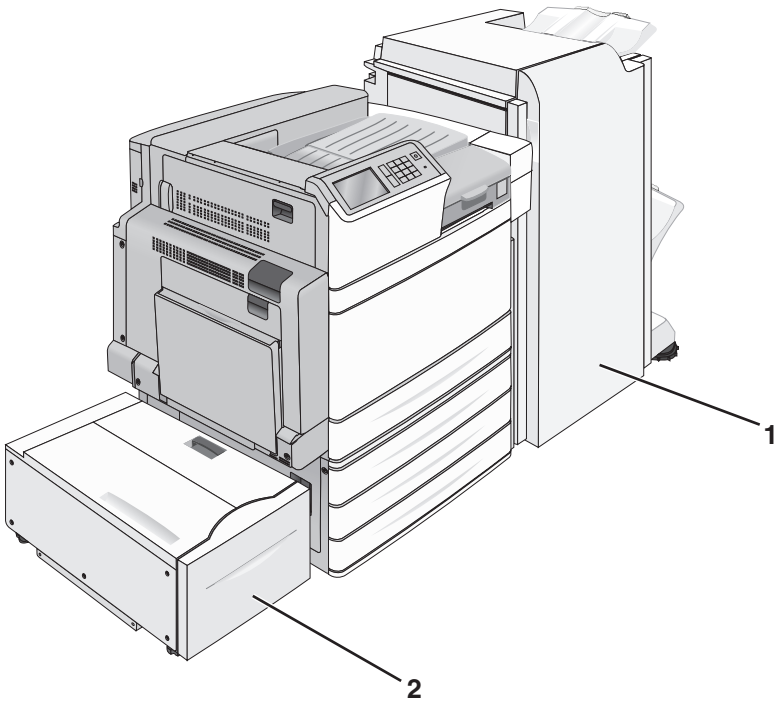

1	Finisher bin The finisher bin can either be one of the following two options: • Standard finisher (Punch/Stapler) • Booklet finisher (Punch/Stapler/Booklet)
2	2,000-sheet high-capacity feeder

CAUTION—TIPPING HAZARD: Floor-mounted configurations require additional furniture for stability. You must use either a printer stand or printer base if you are using a high-capacity input tray, a duplex unit and an input option, or more than one input option. If you purchased a multifunction printer (MFP) that scans, copies, and faxes, you may need additional furniture. For more information, see **www.lexmark.com/multifunctionprinters**.

Using the printer control panel

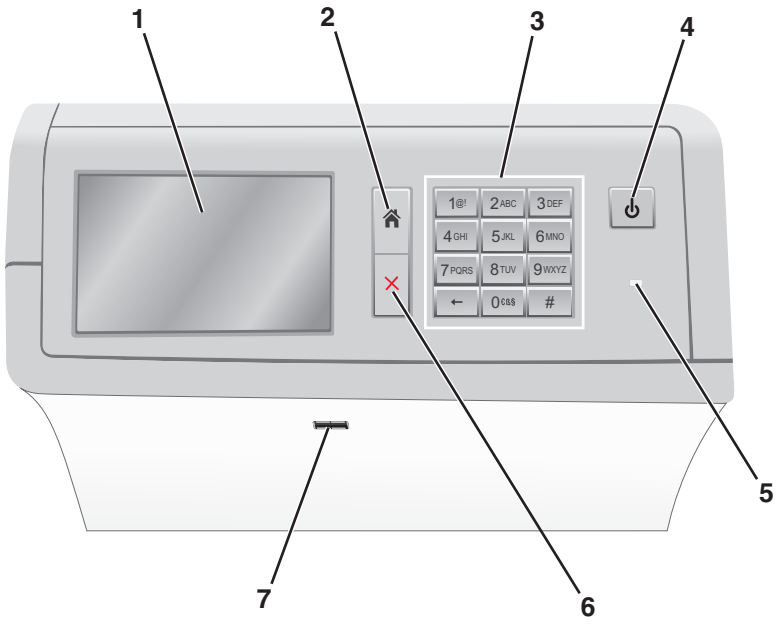

Use		To
1	Display	View printing options as well as status and error messages.
2	Home	Navigate back to the home screen.
3	Keypad	Enter numbers, letters, or symbols.
4	Sleep button	Enable Sleep Mode or Hibernate Mode. • A short press will enable Sleep Mode. • A long press will enable Hibernate Mode. **Note:** Touching the screen or pressing any hard button will cause the printer to wake from Sleep Mode or Hibernate Mode.
5	Indicator light	View the status of the printer. • Off—The printer is off. • Blinking green—The printer is warming up, processing data, or printing. • Solid green—The printer is on, but idle. • Solid red—Operator intervention is needed. • Amber—The printer enters Sleep Mode or Hibernate Mode.
6	Stop/Cancel	Stop all printer activity. **Note:** A list of options is displayed once **Stopped** appears on the display.
7	USB port	Connect a flash drive into the printer USB port. **Note:** Only the front USB port supports flash drives.

Understanding the home screen

Understanding the home screen

When the printer is turned on, the display shows a basic screen, referred to as the home screen. Use the home screen buttons and icons to initiate an action.

Note: Your home screen, icons, and the buttons may vary depending on your home screen customization settings, administrative setup, and active embedded solutions.

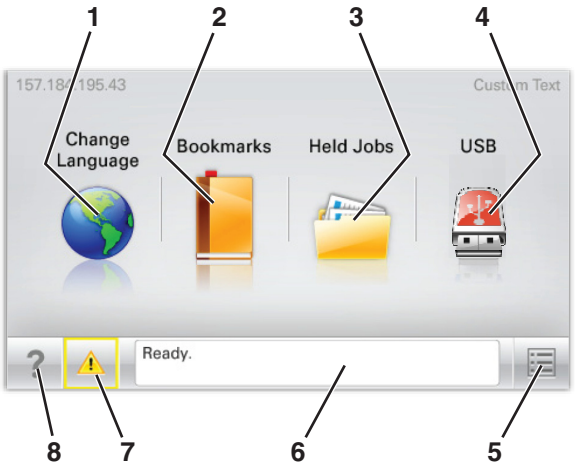

Touch		To
1	Change Language	Change the primary language of the printer.
2	Bookmarks	Create, organize, and save a set of bookmarks (URLs) into a tree view of folders and file links. **Note:** The tree view does not include bookmarks created within **Forms and Favorites**, and the ones in the tree are not usable from within **Forms and Favorites**.
3	Held Jobs	Display all current held jobs.
4	USB or USB Thumbdrive	View, select, or print photos and documents from a flash drive. **Note:** This icon appears only when you return to the home screen while a memory card or flash drive is connected to the printer.
5	Menus	Access printer menus. **Note:** These menus are available only when the printer is in the **Ready** state.
6	Status message bar	• Show the current printer status such as **Ready** or **Busy**. • Show printer conditions such as **Fuser missing** or **Cartridge Low**. • Show intervention messages and the instructions on how to clear them.
7	Status/Supplies	• Display a warning or error message whenever the printer requires intervention to continue processing. • Access the messages screen for more information on the message, and how to clear it.

Touch		To
8	Tips	Open a context-sensitive Help information on the touch screen.

This may also appear on the home screen:

Touch	To
Search Held Jobs	Search current held jobs.

Using the touch-screen buttons

Note: Your home screen, icons, and buttons may vary depending on your home screen customization settings, administrative setup, and active embedded solutions.

Sample touch screen

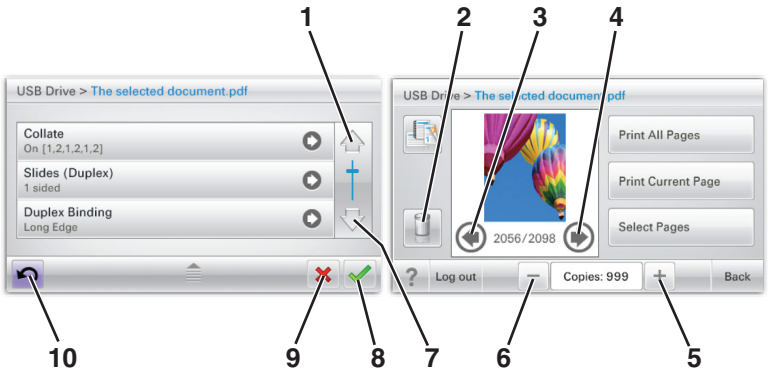

	Touch	To
1	Up arrow	Scroll up.
2	Delete folder	Delete the file you selected.
3	Left arrow	Scroll to the left.

	Touch	To
4	Right arrow	Scroll to the right.
5	Right scroll increase	Scroll to another value in increasing order.
6	Left scroll decrease	Scroll to another value in decreasing order.
7	Down arrow	Scroll down.
8	Accept	Save a setting.
9	Cancel	• Cancel an action or a selection. • Cancel out a screen and return to the previous screen.
10	Back	Navigate back to the previous screen.

Other touch-screen buttons

Touch	To
Exit 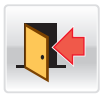	Exit from the current screen to the home screen.
Radio button	Select or clear an item.

Features

Feature	Description
Menu trail line: Menus > Settings > Print Settings > Number of Copies	A menu trail line is located at the top of each menu screen. This feature acts as a trail, showing the path taken to arrive at the current menu. It gives the exact location within the menus. Number of Copies is not underlined since this is the current screen. If you touch an underlined word on the Number of Copies screen before the Number of Copies is set and saved, then the selection is not saved, and does not become the default setting.
Attendance message alert 	If an attendance message affects a function, then this icon appears and the red indicator light blinks.
Warning 	If an error condition occurs, then this icon appears.

Setting up and using the home screen applications

Customizing the home screen using the Embedded Web Server

Accessing the Embedded Web Server

To access the Embedded Web Server, type your printer IP address or host name in the address field of your Web browser.

Note: If you do not know the IP address or host name of the printer, then you can:

- View the information on the printer control panel home screen, or in the TCP/IP section under the Network/Ports menu.
- Print a network setup page or menu settings page, and then locate the information in the TCP/IP section.

Customizing the home screen

1. From the Embedded Web Server, click **Settings** > **General Settings** > **Home screen customization**.
2. Select the home screen application to be displayed.

   Note: You can also clear the check box to hide the home screen application.
3. Click **Submit**.

Note: If the application is not listed, then access the application configuration settings by clicking **Settings** > **Device Solutions** > **Solutions (eSF)** > name of the application.

Using the home screen applications

Note: Your home screen, icons, and buttons may vary depending on your home screen customization settings, administrative setup, and active embedded solutions.

Touch	To
Background and Idle Screen 	Customize the background and idle screen of your printer home screen.
Forms and Favorites 	• Access frequently used forms and bookmarks. • Create your own index of forms, information sheets, and other materials you print often. To print a form, see “Printing forms” on page 22.
Eco-Settings 	Alter printer settings to save energy and paper.
Showroom 	View the special features of your printer in a slide show.

Configuring the home screen or idle screen

Changing the home screen background using the printer control panel

1. From the home screen, navigate to:

   Change Background > select background to use

2. Touch ✔.

Changing the home screen background image using the Embedded Web Server

1. From the Embedded Web Server, click **Settings** > **Solutions** > **Embedded Solutions** > **Background and Idle Screen** > **Configure**.
2. In the Background Images field, select the image you want to use, or click **Browse** to browse to the graphic you want to use, and then click **Open**.
3. Click **Apply**.

Changing the idle screen settings using the Embedded Web Server

1. From the Embedded Web Server, click **Settings** > **Solutions** > **Embedded Solutions** > **Background and Idle Screen** > **Configure**.
2. Beside Idle Screen Images, click **Add**.

   Note: You can also edit and delete idle screen images.
3. Beside Image, click **Browse** to browse to the graphic you want to use, and then click **Open**.
4. Click **Apply**.
5. Repeat steps 2–4 to add up to ten idle screen images.
6. In the Idle Screen Settings, make sure **Enable** is selected.
7. In the Start Time field, enter the number of seconds the printer is idle before the idle screen images appear.
8. In the Image Interval field, enter the number of seconds between image changes.
9. Click **Apply**.

Using Forms and Favorites

The Forms and Favorites application provides users with quick and easy access to frequently used forms or other information that is regularly printed.

The Bookmark function is used to create a link to a form or electronic file at a predetermined URL or network location. These files are then accessed *only* from the Forms and Favorites icon, and not from any other application.

When adding bookmarks from the printer Embedded Web Server, more configuration options are available than when adding bookmarks from the printer control panel.

Changing the display icon and label

You can change the icon and associated text that appear on the printer home screen. If you do not want to use the default icon for an application, then you can import new icons to be used for both the pressed and unpressed button states.

Note: For information about compatible image file types and recommended file sizes, see the mouse-over help next to each field.

1. From the Embedded Web Server, click **Settings** or **Configuration**.
2. Click **Device Solutions** > **Solutions (eSF)**, or click **Embedded Solutions**.

3 Click the name of the application > **Configure**.

4 From the Home Screen Button section, you can:

- Specify a new icon text or label to be displayed above the icon on the home screen.
- Click **Browse** to select a new icon image file to represent the application on the home screen.
- Click **Browse** to select a new image file to be displayed while the application icon is being pressed.

5 Click **Apply** to save the settings or **Reset** to return to the previous settings.

Adding bookmarks using the printer control panel

Note: Bookmarks added from the printer control panel must be edited from the printer Embedded Web Server.

1 From the printer control panel, navigate to:

Forms and Favorites > **Create Bookmark**

2 Enter a name for the new bookmark, and then touch **Enter**.

This name will be displayed in the Forms menu when selecting a form to print.

3 Select **Network**, **FTP**, **HTTP**, or **HTTPS** to specify the network location or the protocol of the bookmark, and then touch **Submit**.

4 Choose an authentication option, or enter the URL or network location of the form.

Note: The printer does not verify the validity of the URL or network location. Make sure the location is entered correctly.

5 Touch .

Adding bookmarks using the Embedded Web Server

1 From the Embedded Web Server, click **Settings** or **Configuration**.

2 Click **Device Solutions** > **Solutions (eSF)**, or click **Embedded Solutions**.

3 Click the name of the application, and then click **Add** under the Bookmarks field.

Note: You can also edit or delete a bookmark.

4 In the Name field, type a new bookmark name.

5 From the Location list, select the protocol or specify if it is located in a network folder. You may choose **Network**, **FTP**, **HTTP**, or **HTTPS**.

6 In the PIN field, type a four-digit number. This field is optional and will require users to enter a PIN when printing the bookmark.

7 Type the network address, the network domain name, the port, or the URL based on the location of the bookmark specified in Step 4.

8 Under Authentication Options, select whether to require user authentication for this destination. The credentials are used to access the network destination.

9 In the sections that follow, adjust the settings as necessary:
   - Select check boxes to allow users to modify settings.
   - Use radio buttons and drop-down menus to specify the default settings.

10 Click **Apply** to save the new bookmark.

Printing forms

1 From the printer touch screen, touch **Forms and Favorites**.

2 Select the form from the list, and then enter the number of copies.

3 Touch ✔.

Using Eco-Settings

The Eco-Settings application lets you select energy- and paper-saving settings that can help reduce the environmental impact of your printer.

Configuring Eco-Settings using the printer control panel

1 From the home screen, navigate to:

   Eco-Settings > **Eco-Mode** > select a setting > ✔

   Notes:

   - If your printer model supports duplex printing, you will be able to print on both sides of the paper. Choose **Paper** to set 2-Sided Printing.
   - Choose **Energy/Paper** to automatically set 2-Sided Printing and Sleep Mode to default values. You will not be able to modify those settings.

2 Touch **2-Sided Printing**, and then touch **1-Sided**, **2-Sided Long Edge**, or **2-Sided Short Edge**.

3 Touch ✔.

4 Touch **Quiet Mode**, and then touch **Off** or **On**.

5 Touch ✔.

   Note: In **Quiet Mode**, the printer runs at a speed that is slower than the default speed. You should notice an increase in processing time for your jobs.

   a Touch **Standby Mode** to adjust the time (1–240 minutes) the printer waits before entering a standby mode.

   b Touch **Sleep Mode** to adjust the time (1–240 minutes) the printer waits before entering a sleep mode.

      Note: Standby Mode will engage automatically when the printer is in Sleep mode.

   c Touch **Screen Brightness** to adjust the screen brightness settings (20–100%).

   d Touch **Darkness** to adjust the darkness settings of your printed documents.

6 Touch **Advanced Options** to configure Schedule Power Modes.

To add a scheduled energy-saving task:

a Touch the **Action** left or right arrow to select an energy-saving task. You may choose **Sleep Mode**, **Hibernation Mode**, **Wake Device – Allow Sleep Mode**, or **Wake Device – Do Not Allow Sleep Mode**.

b Touch the **Time** icon to set the time to perform the energy-saving task.

c Touch the **Day(s)** left or right arrow to specify the day.

d Touch **Add** to save the configuration.

7 Touch .

Configuring Eco-Settings using the Embedded Web Server

Scheduling energy-saving tasks

1 From the Embedded Web Server, click **Settings** > **Solutions** > **Embedded Solutions** > **Eco-Settings** > **Configure**.

2 Beside Scheduled Power Modes field, click **Add**.

3 From the Action list, choose an energy-saving task. You may choose **Wake Device – Do Not Allow Sleep Mode**, **Sleep Mode**, **Wake Device – Allow Sleep Mode**, or **Hibernate**.

4 From the Time field, choose the time to perform the energy-saving task.

5 From the Days field, choose the days to perform the energy-saving task

6 Click **Apply** to save changes, or **Restore Defaults** to return all settings to default values.

Configuring home screen icons and text

1 From the Embedded Web Server, click **Settings** > **Solutions** > **Embedded Solutions** > **Eco-Settings** > **Configure**.

2 In the Text field, type the new button text that you want to appear on the home screen.

3 In the Icon field, type a path or browse to the graphic that you want to appear when the button on the home screen is not pressed.

Note: Use a GIF, JPEG, or PNG image with dimensions of 120 x 75 pixels and is 11KB or smaller.

4 In the Icon When Pressed field, type a path or browse to the graphic you want to appear when the button on the home screen is pressed.

Note: Use a GIF, JPEG, or PNG image with dimensions of 120 x 75 pixels and is 11KB or smaller.

5 Click **Apply**.

Note: To restore the appearance of the default button on the home screen, select **Reset to default value** under the "Home Screen Button: Icon" field or the "Home Screen Button: Icon When Pressed" field, and then click **Apply**.

Configuring energy- and paper-saving options

1. From the Embedded Web Server, click **Settings** > **Solutions** > **Embedded Solutions** > **Eco-Settings** > **Configure**.
2. Adjust the following settings as necessary:
   - **Eco Mode**—Choose **Off**, **Energy** (to reduce energy use, especially when the printer is idle), **Energy/Paper**, or **Paper**.

     Note: If your printer model supports duplex printing, you will be able to print on both sides of the paper. Choosing **Energy/Paper** will automatically set 2-Sided Printing and Sleep Mode to default values. Additional changes made to these settings through the Embedded Web Server will be ignored.
   - **Standby Mode**—Type the number of minutes (1–240) the printer waits before the printer enters a standby mode.
   - **Sleep Mode**—Type the number of minutes (1–240) the printer waits before the printer enters a sleep mode.

     Note: Standby Mode will automatically engage when the printer is in Sleep Mode.
   - **Screen Brightness**—Type the desired percentage for screen brightness (20–100).
   - **2-Sided Printing**—Choose **1-Sided**, **2-Sided Long Edge**, or **2-Sided Short Edge**.
   - **Darkness** or **Toner Darkness**—Choose a toner darkness value (1–5).
   - **Quiet Mode**—Enable this option to reduce the amount of noise produced by the printer.

     Note: When this is selected, printer engine motors do not start until a print job is ready to print. You may notice a short delay before the first page is printed, as well as a reduction in processing speed.
   - **Lock UI**— Enable this option to prevent users from changing Eco-Settings from the printer control panel.
3. Click **Apply** to save changes, or **Restore Defaults** to return all settings to default values.

Exporting or importing configuration settings

You can export configuration settings into a text file that can then be imported and then used to apply the settings to one or more additional printers.

1. From the Embedded Web Server, click **Settings** > **Solutions** > **Embedded Solutions** > **Eco-Settings** > **Configure**.
2. To export your current settings, click **Export**, and then follow the instructions on the computer screen.

   You may enter a unique file name or use the default file name.
3. To import a previously saved configuration file, click **Import**.

   You may load or preview this file.

Using the Remote Operator Panel

The Remote Operator Panel application lets you remotely access the printer control panel display using the Embedded Web Server.

Setting up the Remote Operator Panel

1. From the Embedded Web Server, click **Settings** or **Configuration**.
2. Click **Device Solutions** > **Solutions (eSF)**, or click **Embedded Solutions**.
3. Select the name of the application, and then select the **Enabled** check box.

4 From the Authentication Type menu, select an authentication type.

Note: The Remote Management Access Control works only with the Remote Operator Panel Applet.

5 If you selected VNC Password Authentication as the authentication type, then enter a password in the VNC Password field.

6 If you want to use SSL/TLS for data encryption, then select the **Secure Connection** check box.

7 Click **Apply**.

Remotely accessing the printer control panel using the Embedded Web Server

Note: This feature is available only on printers installed with the Remote Operator Panel application.

1 From the Embedded Web Server, click **Applications** > **Remote Operator Panel**.

2 Click **Launch VNC Applet** > **Click here to continue**.

A dialog appears, remotely showing a dynamic display of the printer control panel in its current state.

3 From the lower left side, refer to the keyboard key equivalent for each of the printer button commands.

Note: The location of the keyboard key equivalent may differ depending on the printer model.

Exporting and importing a configuration using the Embedded Web Server

You can export configuration settings into a text file that can then be imported and used to apply the settings to one or more additional printers.

Exporting a configuration

1 From the Embedded Web Server, click **Settings** or **Configuration**.

2 Click **Device Solutions** > **Solutions (eSF)**, or click **Embedded Solutions**.

3 From Installed Solutions, click the name of the application you want to configure.

4 Click **Configure** > **Export**.

5 Follow the instructions on the computer screen to save the configuration file, and then enter a unique file name or use the default name.

Note: If a **`JVM Out of Memory`** error occurs, then repeat the export until the configuration file is saved.

Importing a configuration

1 From the Embedded Web Server, click **Settings** or **Configuration**.

2 Click **Device Solutions** > **Solutions (eSF)**, or click **Embedded Solutions**.

3 From Installed Solutions, click the name of the application you want to configure.

4 Click **Configure** > **Import**.

5 Browse to the saved configuration file, and then load or preview it.

Note: If a timeout occurs and a blank screen appears, then refresh the browser, and then click **Apply**.

Additional printer setup

Turning on the printer

1 Open the front door.

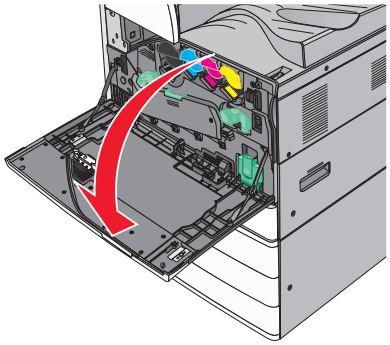

2 Press the printer power switch.

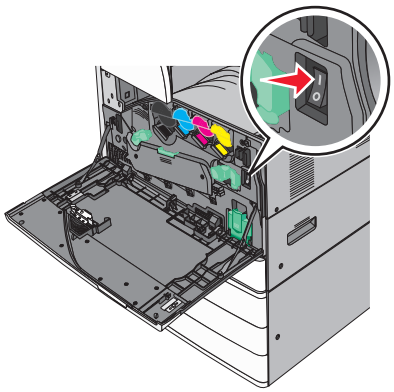

3 Close the front door.

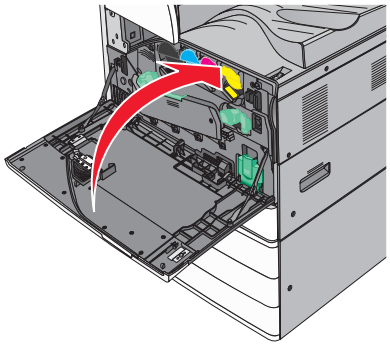

Installing internal options

CAUTION—SHOCK HAZARD: If you are accessing the system board or installing optional hardware or memory devices sometime after setting up the printer, then turn the printer off, and unplug the power cord from the wall outlet before continuing. If you have any other devices attached to the printer, then turn them off as well, and unplug any cables going into the printer.

You can customize your printer connectivity and memory capacity by adding optional cards. The instructions in this section explain how to install the available cards; you can also use them to locate a card for removal.

Available internal options

- Memory cards
  - Printer memory
  - Flash memory
  - Fonts
- Firmware cards
  - Bar Code
  - PrintCryption™
- Printer hard disk
- Lexmark™ Internal Solutions Ports (ISP)
  - RS-232-C Serial ISP
  - Parallel 1284-B ISP
  - MarkNet™ N8250 802.11 b/g/n Wireless ISP
  - MarkNet N8130 10/100 Fiber ISP
  - MarkNet N8120 10/100/1000 Ethernet ISP

Note: An external kit is needed to support the ISP.

Accessing the system board

CAUTION—SHOCK HAZARD: If you are accessing the system board or installing optional hardware or memory devices sometime after setting up the printer, then turn the printer off, and unplug the power cord from the wall outlet before continuing. If you have any other devices attached to the printer, then turn them off as well, and unplug any cables going into the printer.

Note: This task requires a flathead screwdriver.

1 Turn the screws counterclockwise to loosen them.

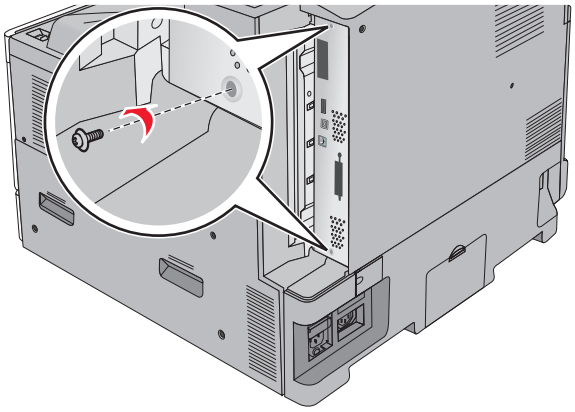

2 Pull the system board forward to remove it.

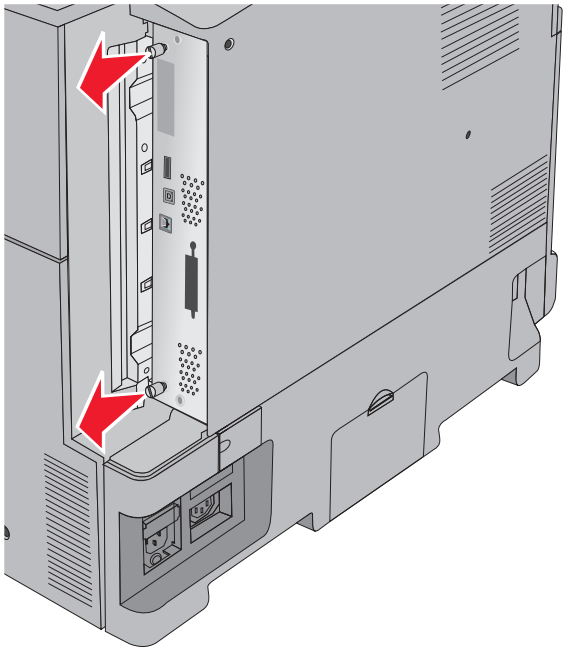

3 Use the following illustration to locate the appropriate connectors.

Warning—Potential Damage: System board electronic components are easily damaged by static electricity. Touch something metal on the printer before touching any system board electronic components or connectors.

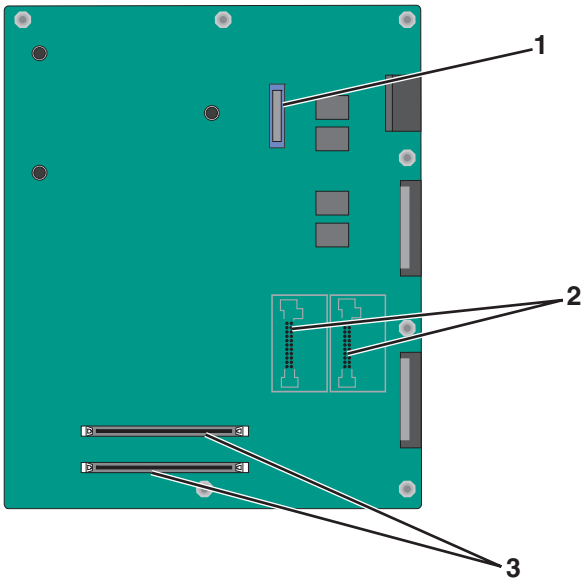

1	ISP connector
2	Firmware and flash memory card connectors
3	Memory card connectors

4 Reattach the system board cover.

Installing a memory card

CAUTION—SHOCK HAZARD: If you are accessing the system board or installing optional hardware or memory devices sometime after setting up the printer, then turn the printer off, and unplug the power cord from the wall outlet before continuing. If you have any other devices attached to the printer, then turn them off as well, and unplug any cables going into the printer.

Warning—Potential Damage: System board electronic components are easily damaged by static electricity. Touch something metal on the printer before touching any system board electronic components or connectors.

An optional memory card can be purchased separately and attached to the system board.

1 Access the system board.

For more information, see “Accessing the system board” on page 29.

Note: This task requires a flathead screwdriver.

2 Unpack the memory card.

Note: Avoid touching the connection points along the edge of the card.

3 On the system board, open the memory card connector latches.

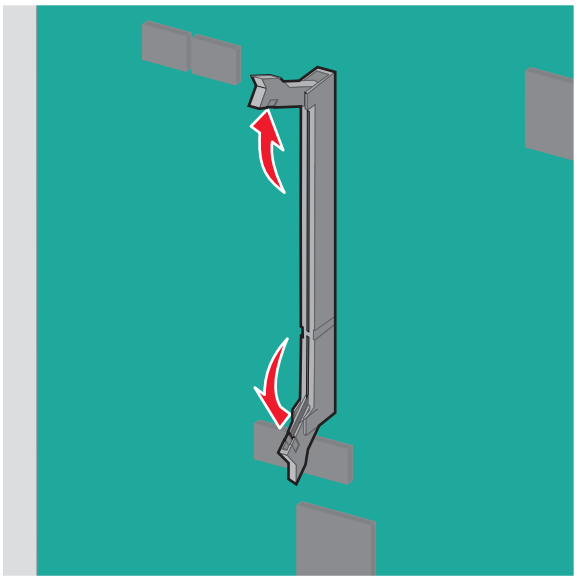

4 Align the notches on the memory card to the ridges on the connector.

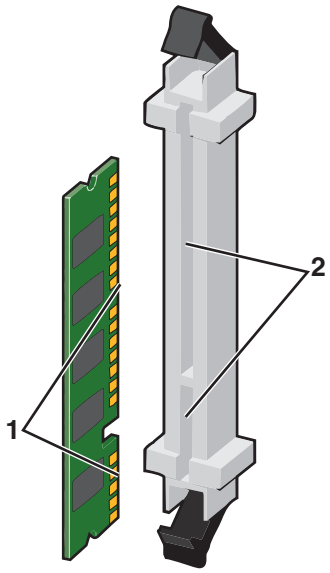

1	Notch
2	Ridge

5 Push the memory card straight into the connector until it *clicks* into place.

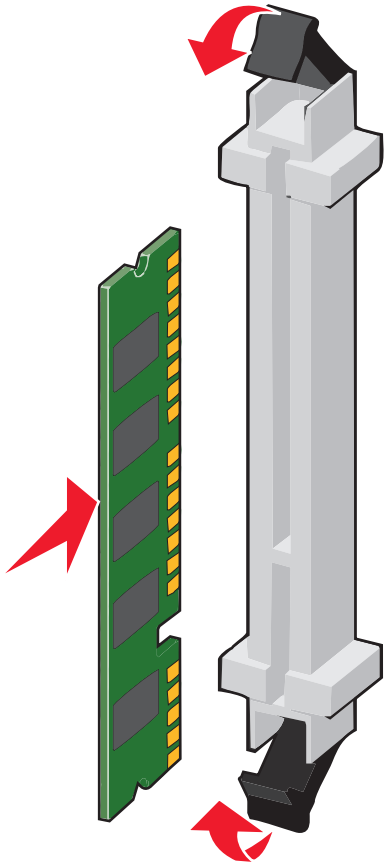

6 Reattach the system board cover.

Installing a flash memory or firmware card

The system board has two connections for an optional flash memory or firmware card. Only one of each may be installed, but the connectors are interchangeable.

CAUTION—SHOCK HAZARD: If you are accessing the system board or installing optional hardware or memory devices sometime after setting up the printer, then turn the printer off, and unplug the power cord from the wall outlet before continuing. If you have any other devices attached to the printer, then turn them off as well, and unplug any cables going into the printer.

Warning—Potential Damage: System board electronic components are easily damaged by static electricity. Touch something metal on the printer before touching any system board electronic components or connectors.

1 Access the system board.

Note: This task requires a flathead screwdriver.

2 Unpack the card.

Note: Avoid touching the connection points along the edge of the card.

3 Holding the card by its sides, align the plastic pins on the card with the holes on the system board.

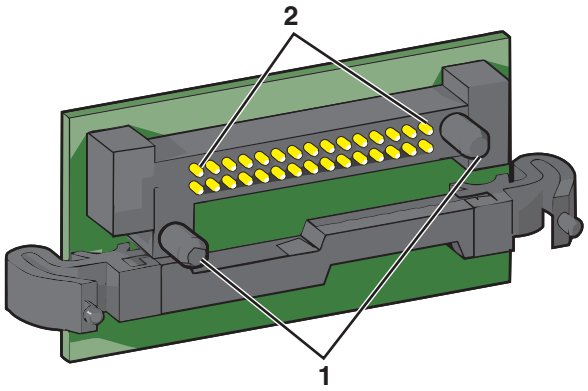

1	Plastic pins
2	Metal pins

4 Push the card firmly into place.

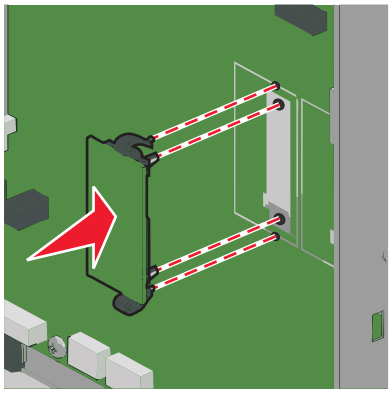

Notes:

- The entire length of the connector on the card must touch and be flush against the system board.
- Be careful not to damage the connectors.

5 Reattach the system board cover.

Installing an Internal Solutions Port

The system board supports one optional Lexmark Internal Solutions Port (ISP).

Note: This task requires a flathead screwdriver.

CAUTION—SHOCK HAZARD: If you are accessing the system board or installing optional hardware or memory devices sometime after setting up the printer, then turn the printer off, and unplug the power cord from the wall outlet before continuing. If you have any other devices attached to the printer, then turn them off as well, and unplug any cables going into the printer.

Warning—Potential Damage: System board electronic components are easily damaged by static electricity. Touch something metal on the printer before touching any system board electronic components or connectors.

1. Access the system board.

   For more information, see “Accessing the system board” on page 29.

2. Remove the printer hard disk.

   For more information, see “Removing a printer hard disk” on page 41

3. Unpack the ISP kit.

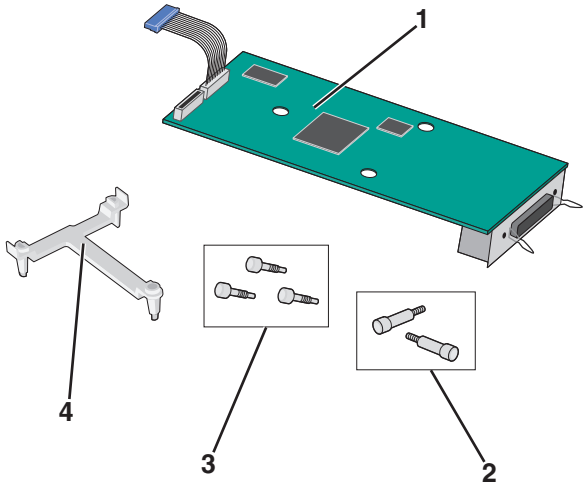

1	ISP solution
2	Screws for the ISP solution
3	Screws for the plastic bracket
4	Plastic bracket

4 Use the provided screws to attach the plastic bracket to the ISP solution.

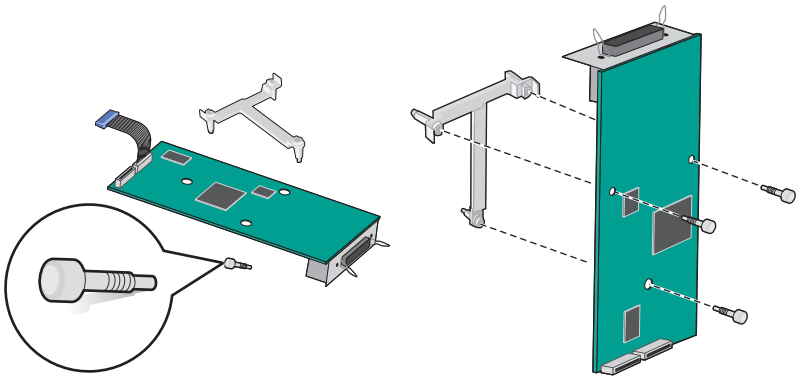

5 Use the provided screw to attach the ISP solution to the system board cage.

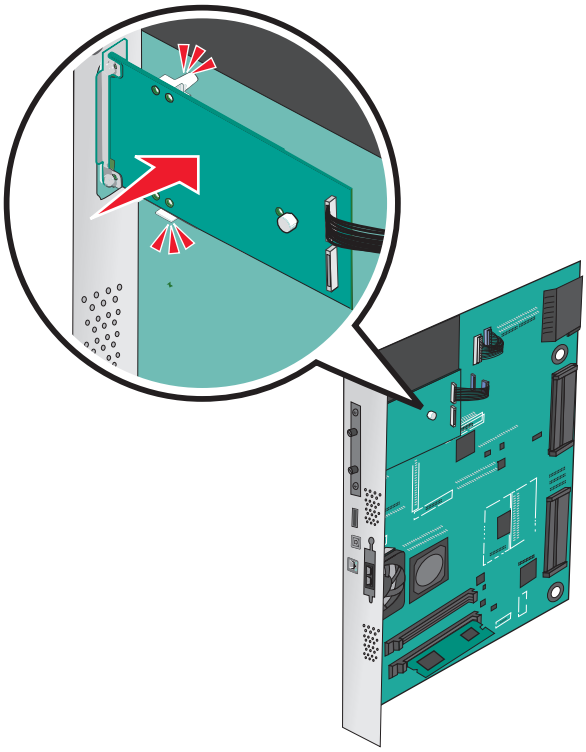

6 Connect the ISP solution interface cable into the receptacle of the system board.

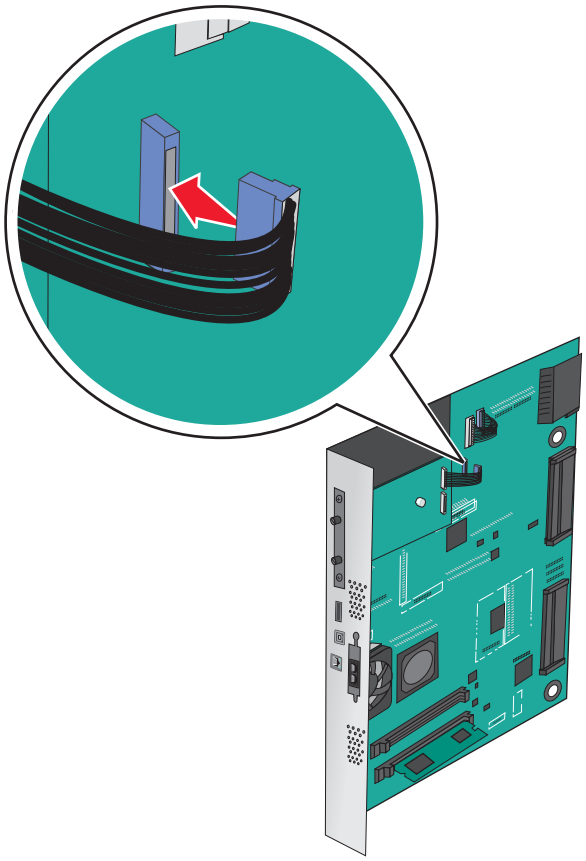

7 Firmly connect the ISP solution to the system board cage using two screws.

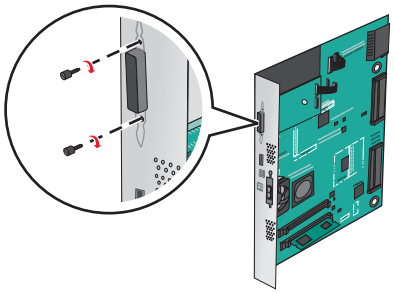

Installing a printer hard disk

Note: This task requires a flathead screwdriver.

CAUTION—SHOCK HAZARD: If you are accessing the system board or installing optional hardware or memory devices sometime after setting up the printer, then turn the printer off, and unplug the power cord from the wall outlet before continuing. If you have any other devices attached to the printer, then turn them off as well, and unplug any cables going into the printer.

Warning—Potential Damage: System board electronic components are easily damaged by static electricity. Touch something metal on the printer before touching any system board electronic components or connectors.

1. Access the system board.

   For more information, see “Accessing the system board” on page 29.

2. Unpack the printer hard disk.

3. Locate the appropriate connector on the system board.

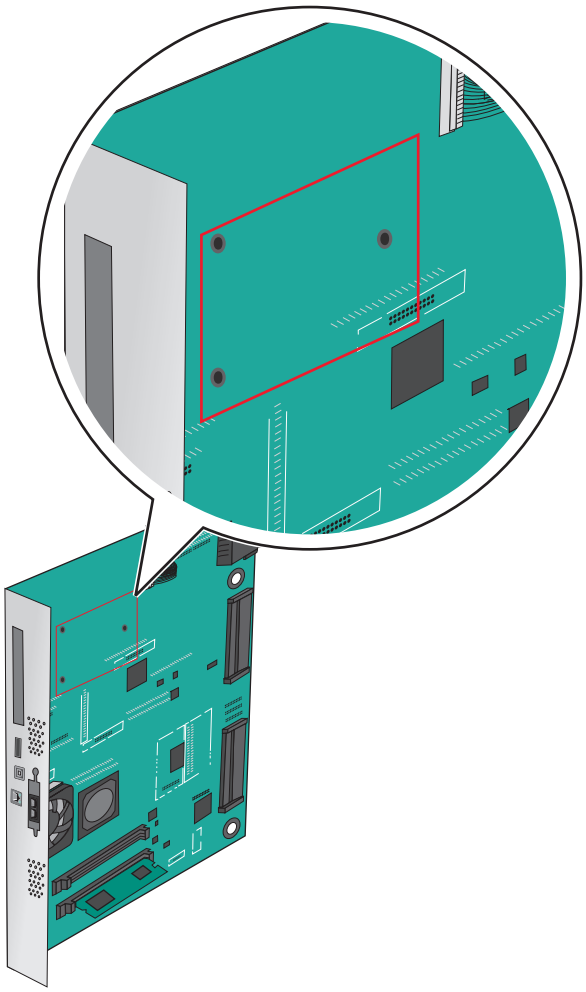

Note: If an optional ISP is currently installed, then the printer hard disk must be installed onto the ISP.

To install a printer hard disk onto the ISP:

a Using a flathead screwdriver, loosen the screws.

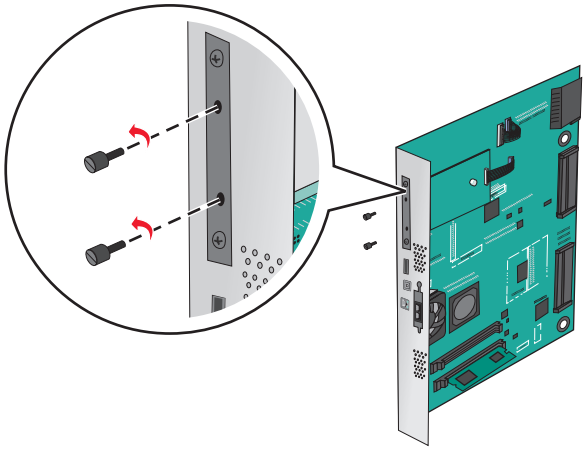

b Remove the screws attached to the printer hard disk mounting bracket, and then remove the bracket.

c Align the standoffs of the printer hard disk to the holes in the ISP, and then press down on the printer hard disk until the standoffs are in place.

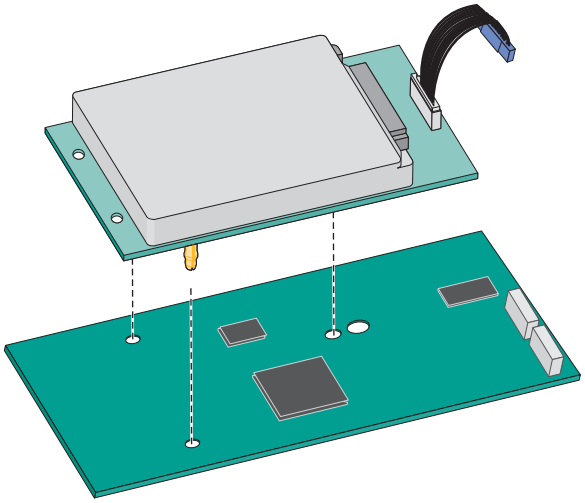

d Insert the plug of the printer hard disk interface cable into the receptacle of the ISP.

Note: The plugs and receptacles are color-coded.

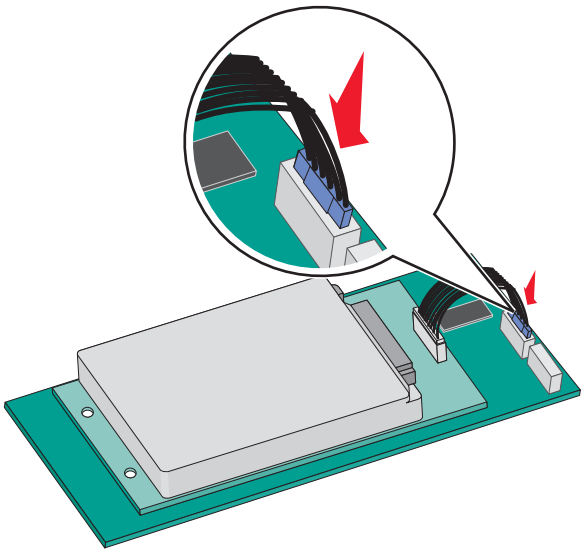

To install a printer hard disk directly on the system board:

a Align the standoffs of the printer hard disk to the holes in the system board, and then press down on the printer hard disk until the standoffs are in place.

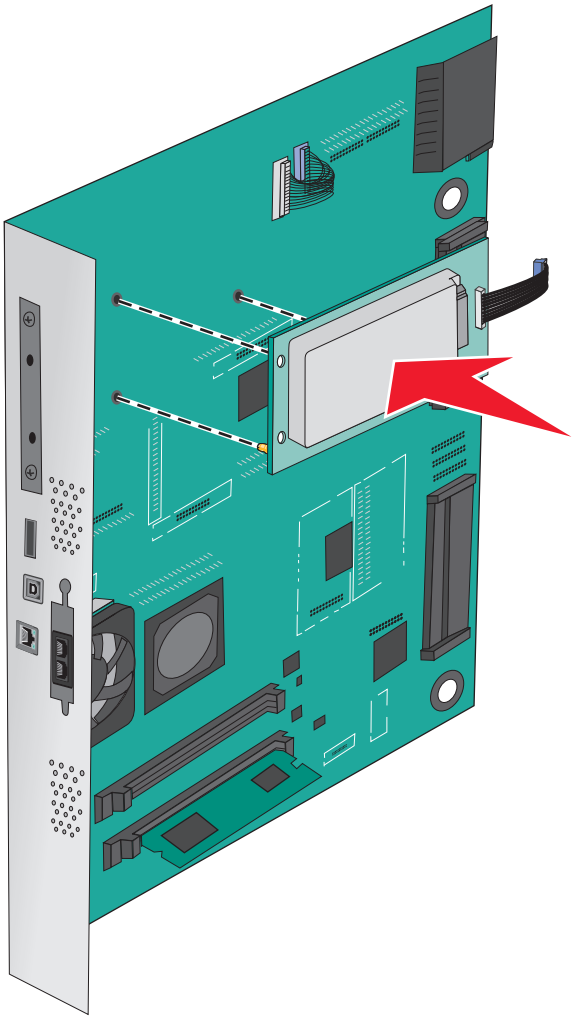

b Use the two provided screws to attach the printer hard disk mounting bracket.

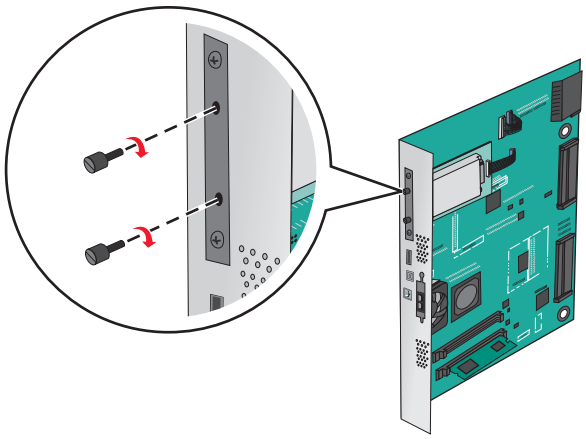

c Insert the plug of the printer hard disk interface cable into the receptacle of the system board.

Note: The plugs and receptacles are color-coded.

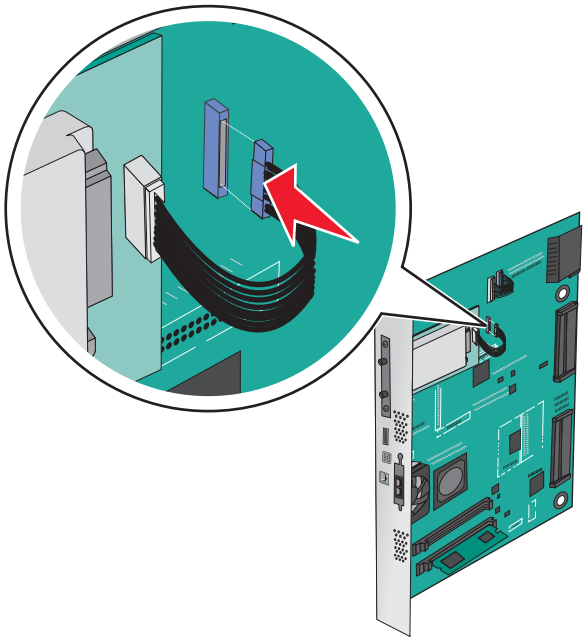

4 Reattach the system board cover.

Removing a printer hard disk

Note: This task requires a flathead screwdriver.

Warning—Potential Damage: System board electronic components are easily damaged by static electricity. Touch something metal on the printer before touching any system board electronic components or connectors.

1. Access the system board.

   For more information, see “Accessing the system board” on page 29.

2. Unplug the printer hard disk interface cable from the system board, leaving the cable attached to the printer hard disk. To unplug the cable, squeeze the paddle at the plug of the interface cable to disengage the latch before pulling the cable out.

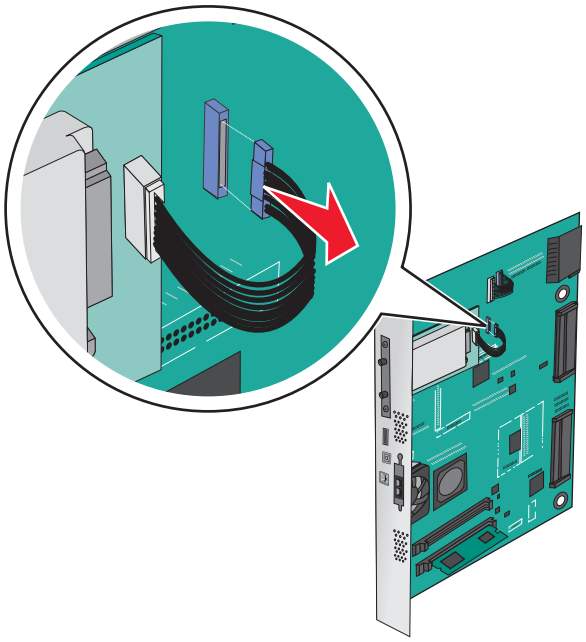

3 Remove the screws while holding the printer hard disk in place, and then remove the printer hard disk.

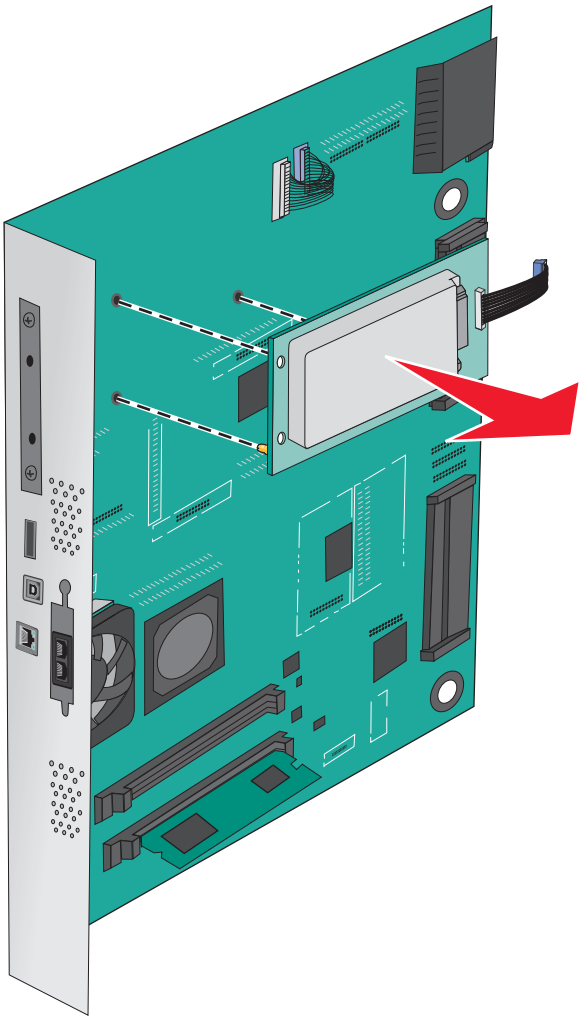

4 Set the printer hard disk aside.

5 Reattach the system board cover.

Order of installation

CAUTION—TIPPING HAZARD: Floor-mounted configurations require additional furniture for stability. You must use either a printer stand or printer base if you are using a high-capacity input tray, a duplex unit and an input option, or more than one input option. If you purchased a multifunction printer (MFP) that scans, copies, and faxes, you may need additional furniture. For more information, contact the place where you purchased the printer.

CAUTION—SHOCK HAZARD: If you are accessing the system board or installing optional hardware or memory devices sometime after setting up the printer, then turn the printer off, and unplug the power cord from the wall outlet before continuing. If you have any other devices attached to the printer, then turn them off as well, and unplug any cables going into the printer.

CAUTION—POTENTIAL INJURY: The printer weight is greater than 18 kg (40 lb) and requires two or more trained personnel to lift it safely.

Install the printer and any optional trays or finishers you have purchased in the following order:

Using a 1-tray module

- Optional 520-sheet tray (Tray 2)
- Printer
- 2,000-sheet high-capacity feeder
- Finisher

Using a 3-tray module

- 3-tray module
- Printer
- 2,000-sheet high-capacity feeder
- Finisher

Using a tandem-tray module

- Tandem-tray module
- Printer
- 2,000-sheet high-capacity feeder
- Finisher

For information on installing a 1-tray module, 3-tray module, tandem-tray module, high-capacity feeder, or any of the finishers, see the setup documentation that came with the option.

Installing optional trays

The printer supports the following optional trays:

- 1-tray module
- 3-tray module
- Tandem-tray module
- High-capacity feeder

CAUTION—POTENTIAL INJURY: The printer weight is greater than 18 kg (40 lb) and requires two or more trained personnel to lift it safely.

CAUTION—SHOCK HAZARD: If you are accessing the system board or installing optional hardware or memory devices sometime after setting up the printer, then turn the printer off, and unplug the power cord from the wall outlet before continuing. If you have any other devices attached to the printer, then turn them off as well, and unplug any cables going into the printer.

CAUTION—TIPPING HAZARD: Floor-mounted configurations require additional furniture for stability. You must use either a printer stand or printer base if you are using a high-capacity input tray, a duplex unit and an input option, or more than one input option. If you purchased a multifunction printer (MFP) that scans, copies, and faxes, you may need additional furniture. For more information, see **www.lexmark.com/multifunctionprinters**.

1. Unpack the optional tray, and then remove all packing material.
2. Place the tray near the printer.
3. Turn off the printer.

4 Align the printer with the tray, and then lower the printer into place.

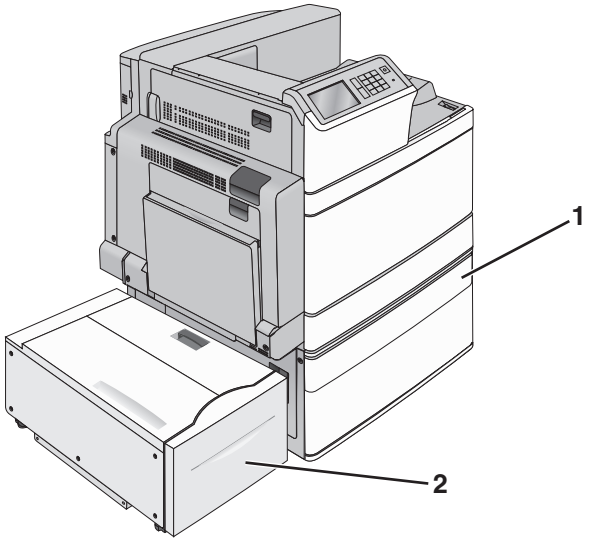

1-tray module

1	1-tray module
2	2,000-sheet high-capacity feeder

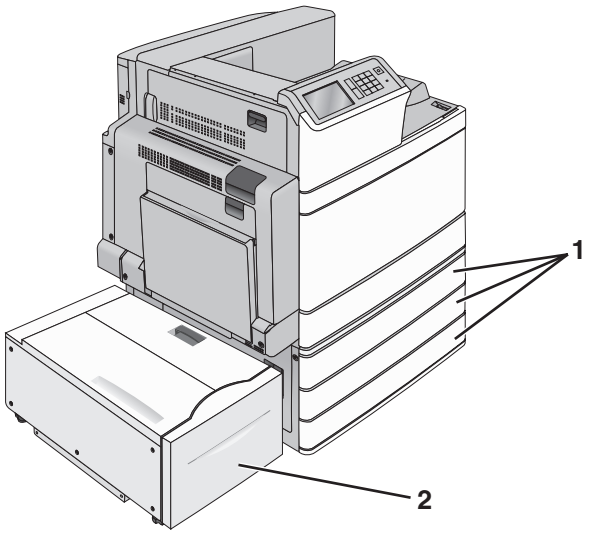

3-tray module

1	3-tray module
2	2,000-sheet high-capacity feeder

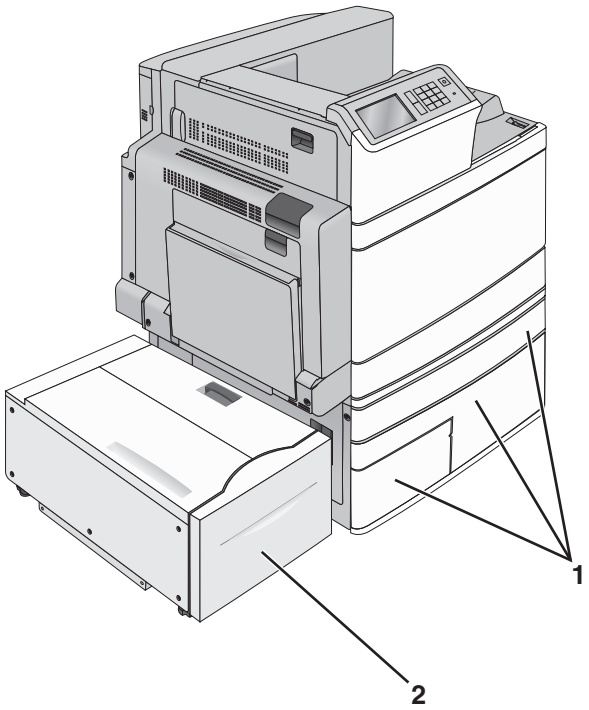

Tandem-tray module

1	Tandem-tray module
2	2,000-sheet high-capacity feeder

5 Turn the printer back on.

6 Set the printer software to recognize the optional tray. For more information, see “Updating available options in the printer driver” on page 48.

Attaching cables

CAUTION—POTENTIAL INJURY: Do not use the fax feature during a lightning storm. Do not set up this product or make any electrical or cabling connections, such as the fax feature, power cord, or telephone, during a lightning storm.

Connect the printer to the computer using a USB cable or Ethernet cable.

Be sure to match the following:

- The USB symbol on the cable with the USB symbol on the printer
- The appropriate Ethernet cable to the Ethernet port

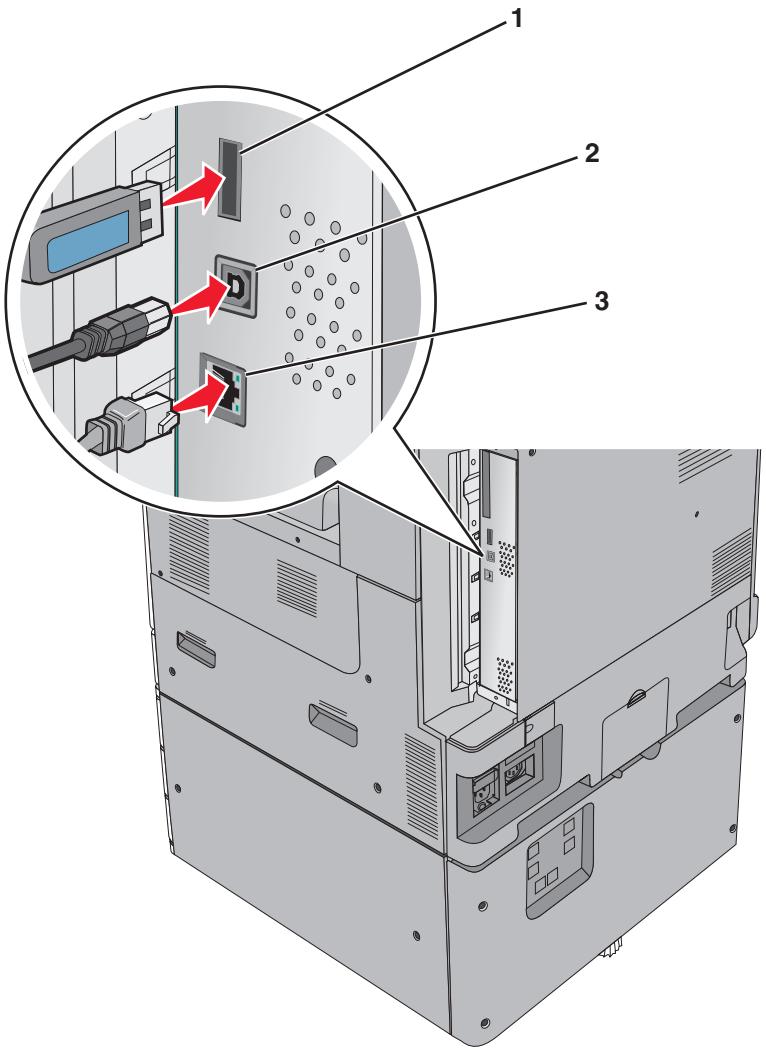

1	USB printer port
2	USB port
3	Ethernet port

Warning—Potential Damage: Do not touch the USB cable, any network adapter, or the printer in the area shown while actively printing. A loss of data or a malfunction can occur.

Verifying printer setup

Once all hardware and software options are installed and the printer is turned on, verify that the printer is set up correctly by printing the following:

- **Menu settings page**—Use this page to verify that all printer options are installed correctly. A list of installed options appears toward the bottom of the page. If an option you installed is not listed, then it is not installed correctly. Remove the option and install it again.
- **Network setup page**—If your printer is a network model and is attached to a network, print a network setup page to verify the network connection. This page also provides important information that aids network printing configuration.

Printing a menu settings page

From the home screen, navigate to:

> **Reports** > **Menu Settings Page**

Printing a network setup page

If the printer is attached to a network, then print a network setup page to verify the network connection. This page also provides important information that aids network printing configuration.

1. From the home screen, navigate to:

   > **Reports** > **Network Setup Page**

2. Check the first section of the network setup page, and confirm that the status is **Connected**.

   If the status is **Not Connected**, then the LAN drop may not be active, or the network cable may be malfunctioning. Consult a system support person for a solution, and then print another network setup page.

Setting up the printer software

Installing the printer software

Note: If you installed the printer software on this computer before but need to reinstall the software, then uninstall the current software first.

For Windows users

1. Close all open software programs.
2. Insert the installation software CD.

   If the installation dialog screen does not appear after a minute, then launch the CD manually:

   a. Click , or click **Start** and then click **Run**.

   b. In the Start Search or Run box, type **D:\setup.exe**, where **D** is the letter of your CD or DVD drive.

   c. Press **Enter**, or click **OK**.

3. Click **Install**, and then follow the instructions on the computer screen.

For Macintosh users

1. Close all open applications.
2. Insert the installation software CD.

   If the installation dialog does not appear after a minute, then click the CD icon on the desktop.

3. Double-click the software installer package, and then follow the instructions on the computer screen.

Using the Internet

1. Go to the Lexmark Web site at **www.lexmark.com**.
2. Navigate to:

   SUPPORT & DOWNLOADS > select your printer > select your operating system
3. Download the driver and install the printer software.

Note: Updated printer software may be available at **http://support.lexmark.com**.

Updating available options in the printer driver

Once the printer software and any options are installed, it may be necessary to manually add the options in the printer driver to make them available for print jobs.

For Windows users

1. Open the printers folder:
   a. Click , or click **Start** and then click **Run**.
   b. In the Start Search or Run box, type `control printers`.
   c. Press **Enter**, or click **OK**.
2. Select the printer.
3. Right-click the printer, and then select **Properties**.
4. Click the **Configuration** tab.
5. Click **Update Now - Ask Printer** or manually add any installed hardware options under Configuration Options.
6. Click **Apply**.

For Macintosh users

In Mac OS X version 10.5 or later

1. From the Apple menu, navigate to:

   System Preferences > **Print & Fax** > select your printer > **Options & Supplies** > **Driver**
2. Add any installed hardware options, and then click **OK**.

In Mac OS X version 10.4 or earlier

1. From the Finder, navigate to:

   Go > **Applications** > **Utilities**
2. Double-click **Printer Setup Utility** or **Print Center**.
3. Select your printer.
4. From the Printers menu, choose **Show Info**.
5. Add any installed hardware options, and then click **Apply Changes**.

Setting up wireless printing

Note: A Service Set Identifier (SSID) is a name assigned to a wireless network. Wireless Encryption Protocol (WEP) and Wi-Fi Protected Access (WPA) are types of security used on a network.

Information you will need to set up the printer on a wireless network

Note: Do not connect the installation or network cables until prompted to do so by the setup software.

- **SSID**—The SSID is also referred to as the network name.
- **Wireless Mode (or Network Mode)**—The mode will be either infrastructure or ad hoc.
- **Channel (for ad hoc networks)**—The channel defaults to auto for infrastructure networks.

  Some ad hoc networks will also require the auto setting. Check with your system support person if you are not sure which channel to select.
- **Security Method**—There are three basic options for Security Method:
  - WEP key

    If your network uses more than one WEP key, enter up to four in the provided spaces. Select the key currently in use on the network by selecting the Default WEP Transmit Key.

    or
  - WPA or WPA2 passphrase

    WPA includes encryption as an additional layer of security. The choices are AES or TKIP. Encryption must be set for the same type on the router and on the printer, or the printer will not be able to communicate on the network.
  - No security

    If your wireless network does not use any type of security, then you will not have any security information.

    Note: Using an unsecured wireless network is not recommended.

If you are installing the printer on an 802.1X network using the Advanced method, then you may need the following:

- Authentication type
- Inner authentication type
- 802.1X username and password
- Certificates

Note: For more information on configuring 802.1X security, see the *Networking Guide* on the *Software and Documentation* CD.

Installing the printer on a wireless network (Windows)

Before installing the printer on a wireless network, make sure:

- Your wireless network is set up and working properly.
- The computer you are using is connected to the same wireless network where you want to set up the printer.

1 Connect the power cable to the printer and then to a properly grounded electrical outlet, and then turn the printer on.

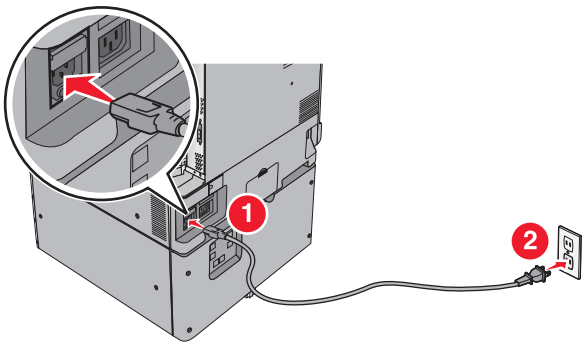

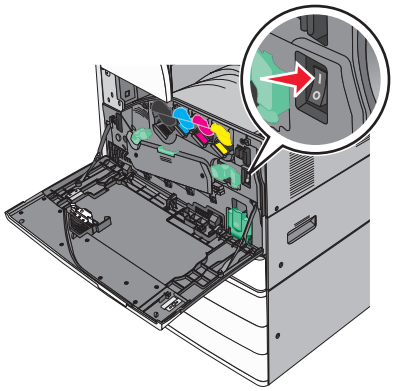

Make sure the printer and computer are fully on and ready.

Do not connect the USB cable until instructed to do so on the computer screen.

2 Insert the *Software and Documentation* CD.

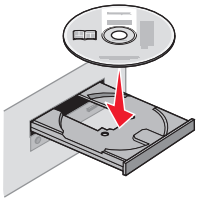

3 Click **Install**, and then follow the instructions on the computer screen.

4 Select **Wireless connection** when asked to choose a connection type.

5 From the Wireless Configuration dialog, select **Guided Setup (Recommended)**.

Note: Choose **Advanced Setup** only if you want to customize your installation.

6 Temporarily connect a USB cable between the computer on the wireless network and the printer.

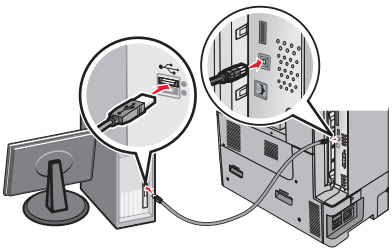

Note: After the printer is configured, the software will instruct you to disconnect the temporary USB cable so you can print wirelessly.

7 Follow the instructions on the computer screen.

Note: For more information on allowing other computers on the network to use the wireless printer, see the *Networking Guide*.

Installing the printer on a wireless network (Macintosh)

Make sure to disconnect the Ethernet cable when installing the printer on a wireless network.

Prepare to configure the printer

1 Connect the power cable to the printer and then to a properly grounded electrical outlet, and then turn the printer on.

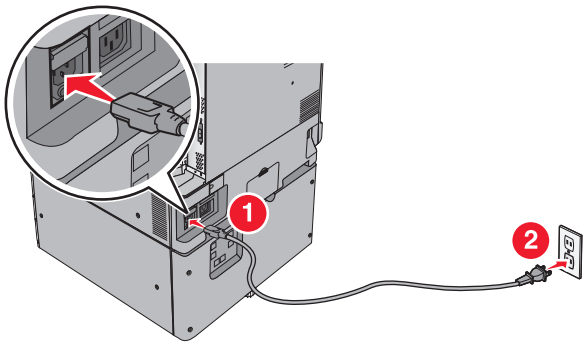

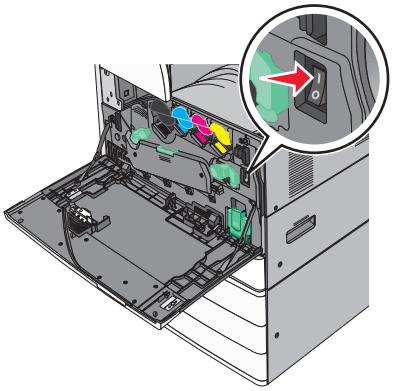

2 Locate the printer MAC address.

a From the home screen, navigate to:

> **Reports** > **Network Setup Page**

b In the Standard Network Card section, look for **UAA (MAC)**.

Note: You will need this information later.

Enter the printer information

1 Access the AirPort options:

In Mac OS X version 10.5 or later

From the Apple menu, navigate to:

System Preferences > **Network** > **AirPort**

In Mac OS X version 10.4 or earlier

From the Finder, navigate to:

Applications > **Internet Connect** > **AirPort**

2. From the Network Name pop-up menu, select **print server [yyyyyy]**, where the **y**'s are the last six digits of the MAC address located on the MAC address sheet.
3. Open a Web browser.
4. From the Bookmarks menu, select **Show** or **Show All Bookmarks**.
5. Under COLLECTIONS, select **Bonjour** or **Rendezvous**, and then double-click the printer name.

   Note: The application referred to as *Rendezvous* in Mac OS X version 10.2 is now called *Bonjour* by Apple Inc.
6. From the Embedded Web Server, navigate to where the wireless settings information are stored.

Configure the printer for wireless access

1. Type the network name (SSID) in the appropriate field.
2. Select **Infrastructure** as your Network Mode setting if you are using an access point (wireless router).
3. Select the type of security you want to use to protect your wireless network.
4. Enter the security information necessary for the printer to connect to the wireless network.
5. Click **Submit**.
6. Open the AirPort application on your computer:

In Mac OS X version 10.5 or later

From the Apple menu, navigate to:

System Preferences > **Network** > **AirPort**

In Mac OS X version 10.4 or earlier

From the Finder, navigate to:

Applications > **Internet Connect** > **AirPort**

7. From the Network pop-up menu, select the name of your wireless network.

Configure your computer to use the printer wirelessly

To print on a network printer, each Macintosh user must install a custom printer driver file and create a print queue in the Printer Setup Utility or Print Center.

1. Install a printer driver file on the computer:
   a. Insert the *Software and Documentation* CD, and then double-click the installer package for the printer.
   b. Follow the instructions on the computer screen.
   c. Select a destination, and then click **Continue**.
   d. From the Easy Install screen, click **Install**.

e Type the user password, and then click **OK**.
All necessary applications are installed in the computer.

f Click **Close** when installation is complete.

2 Add the printer:

a For IP printing:

In Mac OS X version 10.5 or later

1. From the Apple menu, navigate to:
System Preferences > **Print & Fax**
2. Click **+**, and then click the **IP** tab.
3. Type the IP address of the printer in the address field, and then click **Add**.

In Mac OS X version 10.4 or earlier

1. From the Finder, navigate to:
Applications > **Utilities**
2. Double-click **Printer Setup Utility** or **Print Center**.
3. From the Printer List, choose **Add**, and then click **IP Printer**.
4. Type the IP address of the printer in the address field, and then click **Add**.

b For AppleTalk printing:

Note: Make sure AppleTalk is activated on your printer.

In Mac OS X version 10.5

1. From the Apple menu, navigate to:
System Preferences > **Print & Fax**
2. Click **+**, and then navigate to:
AppleTalk > select the printer from the list > **Add**

In Mac OS X version 10.4 or earlier

1. From the Finder, navigate to:
Applications > **Utilities**
2. Double-click **Printer Setup Utility** or **Print Center**.
3. From the Printer List, click **Add**.
4. Click **Default Browser** tab > **More Printers**.
5. From the first pop-up menu, select **AppleTalk**.
6. From the second pop-up menu, select **Local AppleTalk Zone**.
7. Select the printer from the list, and then click **Add**.

Installing the printer on a wired network

These instructions apply to Ethernet and fiber optic network connections.

Note: Make sure you have completed the initial setup of the printer.

For Windows users

1. Insert the *Software and Documentation* CD.

Wait for the Welcome screen to appear.

If the CD does not launch after a minute, then do the following:

a Click or click **Start**, and then click **Run**.

b In the Start Search or Run box, type **D:\setup.exe**, where **D** is the letter of your CD or DVD drive.

c Press **Enter**, or click **OK**.

2 Click **Install**, and then follow the instructions on the computer screen.

Note: To configure the printer using a static IP address, using IPv6, or to configure printers using scripts, select **Advanced Options** > **Administrator Tools**.

3 Select **Ethernet connection**, and then click **Continue**.

4 Attach the appropriate cable to the computer and to the printer when instructed to do so.

5 Select the printer from the list, and then click **Continue**.

Note: If the configured printer does not appear on the list, then click **Modify Search**.

6 Follow the instructions on the computer screen.

For Macintosh users

1 Allow the network DHCP server to assign an IP address to the printer.

2 Obtain the printer IP address. You can:

a View the information on the printer control panel home screen, or in the TCP/IP section under the Networks/Ports menu.

b Print a network setup page or menu settings page and locate the information in the TCP/IP section.

Note: You will need the IP address if you are configuring access for computers on a different subnet than the printer.

3 Install the printer drivers, and then add the printer.

a Install a printer driver file on the computer:

1 Insert the *Software and Documentation* CD, and then double-click the installer package for the printer.

2 Follow the instructions on the computer screen.

3 Select a destination, and then click **Continue**.

4 From the Easy Install screen, click **Install**.

5 Type the user password, and then click **OK**.
All the necessary software is installed on the computer.

6 Click **Close** when installation is complete.

b Add the printer:

- For IP printing:

In Mac OS X version 10.5 or later

1 From the Apple menu, navigate to:
System Preferences > **Print & Fax**

2 Click **+**, and then click the **IP** tab.

3 Type the printer IP address in the Address field, and then click **Add**.

In Mac OS X version 10.4 or earlier

1. From the Finder, navigate to:
   Applications > **Utilities**
2. Double-click **Printer Setup Utility** or **Print Center**.
3. From the Printer List, click **Add**, and then click **IP Printer**.
4. Type in the printer IP address in the Address field, and then click **Add**.

- For AppleTalk printing:

  Note: Make sure AppleTalk is activated on your printer.

In Mac OS X version 10.5 or later

1. From the Apple menu, navigate to:
   System Preferences > **Print & Fax**
2. Click **+**, and then navigate to:
   AppleTalk > select the printer from the list > **Add**

In Mac OS X version 10.4 or earlier

1. From the Finder, navigate to:
   Applications > **Utilities**
2. Double-click **Printer Setup Utility** or **Print Center**.
3. From the Printer List, click **Add**.
4. Click **Default Browser** tab > **More Printers**.
5. From the first pop-up menu, select **AppleTalk**.
6. From the second pop-up menu, select **Local AppleTalk Zone**.
7. Select the printer from the list, and then click **Add**.

Note: If the printer does not show up in the list, then you may need to add it using the IP address. For more information, contact your system support person.

Changing port settings after installing a new network Internal Solutions Port

When a new Lexmark Internal Solutions Port (ISP) is installed in the printer, the printer configurations on computers that access the printer must be updated since the printer will be assigned a new IP address. All computers that access the printer must be updated with this new IP address.

Notes:

- If the printer has a static IP address, then you do not need to make any changes to the computer configurations.
- If the computers are configured to use network name that will stay the same, instead of by IP address, then you do not need to make any changes to your computer configurations.
- If you are adding a wireless ISP to a printer previously configured for a wired connection, then make sure the wired network is disconnected when you configure the printer to operate wirelessly. If the wired connection remains connected, then the wireless configuration will complete, but the wireless ISP will not be active. In the event that the printer was configured for a wireless ISP while still attached to a wired connection, disconnect the wired connection, turn the printer off, and then turn the printer back on again. This will enable the wireless ISP.
- Only one network connection at a time is active. If you want to switch the connection type between wired and wireless, you must first turn the printer off, connect the cable (to switch to a wired connection) or disconnect the cable (to switch to a wireless connection), and then turn the printer on.

For Windows users

1. Type the printer IP address into the address field of your Web browser.

   If you do not know the IP address of the printer, you can:
   - View the IP address on the printer control panel in the TCP/IP section under the Networks/Ports menu.
   - Print a network setup page or the menu settings pages and locate the IP address in the TCP/IP section.
2. Click , or click **Start** and then click **Run**.
3. In the Start Search or Run box, type **`control printers`**.
4. Press **Enter**, or click **OK**.

   The printer folder opens.
5. Locate the printer that has changed.

   Note: If there is more than one copy of the printer, then update all of them with the new IP address.
6. Right-click the printer.
7. Click **Properties** > **Ports** tab.
8. Select the port from the list, and then click **Configure Port**.
9. Type the new IP address in the “Printer Name or IP Address” field.
10. Click **OK** > **Close**.

For Macintosh users

1. Type the printer IP address into the address field of your Web browser.

If you do not know the IP address of the printer, you can:

- View the IP address on the printer control panel in the TCP/IP section under the Networks/Ports menu.
- Print a network setup page or the menu settings pages and locate the IP address in the TCP/IP section.

  Note: You will need the IP address if you are configuring access for computers on a different subnet than the printer.

2 Add the printer:

- For IP printing:

  ### In Mac OS X version 10.5 or later

  a From the Apple menu, navigate to:
  System Preferences > **Print & Fax**

  b Click **+**, and then click the **IP** tab.

  c Type the IP address of your printer in the Address field, and then click **Add**.

  ### In Mac OS X version 10.4 or earlier

  a From the Finder, navigate to:
  Applications > **Utilities**

  b Double-click **Printer Setup Utility** or **Print Center**.

  c From the Printer List, click **Add**, and then click **IP Printer**.

  d Type the IP address of your printer in the Address field, and then click **Add**.

- For AppleTalk printing:

  Note: Make sure AppleTalk is activated on your printer.

  ### In Mac OS X version 10.5

  a From the Apple menu, navigate to:
  System Preferences > **Print & Fax**

  b Click **+**, and then navigate to:
  AppleTalk > select the printer from the list > **Add**

  ### In Mac OS X version 10.4 or earlier

  a From the Finder, navigate to:
  Applications > **Utilities**

  b Double-click **Printer Setup Utility** or **Print Center**.

  c From the Printer List, click **Add**.

  d Click the **Default Browser** tab > **More Printers**.

  e From the first pop-up menu, select **AppleTalk**.

  f From the second pop-up menu, select **Local AppleTalk Zone**.

  g Select the printer from the list, and then click **Add**.

Setting up serial printing

In serial printing, data is transferred one bit at a time. Although serial printing is usually slower than parallel printing, it is the preferred option when there is a great deal of distance between the printer and computer or when an interface with a better transfer rate is not available.

After installing the serial or communication (COM) port, configure the printer and the computer so they can communicate. Make sure you have connected the serial cable to the COM port on your printer.

1. Set the parameters in the printer:
   a. From the printer control panel, navigate to the menu with port settings.
   b. Locate the menu with serial port settings.
   c. Make any necessary changes to the serial settings.
   d. Save the new settings, and then print a menu settings page.
2. Install the printer driver:
   a. Insert the *Software and Documentation* CD.
      If the installation screen does not appear after a minute, then launch the CD manually::
      1. Click , or click **Start** and then click **Run**.
      2. In the Start Search or Run box, type **`D:\setup.exe`**, where **`D`** is the letter of the CD or DVD drive.
      3. Press **Enter**, or click **OK**.
   b. Click **Advanced Options** > **Custom Install**.
   c. Follow the instructions on the computer screen
   d. From the Configure Printer Connection dialog, select **Connect through a port discovered on your computer**, and then select a port.
   e. If the port is not in the list, then click **Refresh**.
      or
      Navigate to:
      Add port > select a port type > enter necessary information > **OK**
   f. Click **Continue**.
      1. If you want to add another printer, then click **Add Another**.
      2. If you want to make changes, then select a printer, and then click **Edit**.
      3. Follow the instructions on the computer screen.
   g. Click **Finish**.
3. Set the COM port parameters:

   After installing the printer driver, set the serial parameters in the COM port assigned to the printer driver.

   Note: Make sure the serial parameters in the COM port match the serial parameters you set in the printer.
   a. Open the Device Manager.
      1. Click , or click **Start** and then click **Run**.
      2. In the Start Search or Run box, type **`devmgmt.msc`**.
      3. Press **Enter**, or click **OK**.
   b. Look for Ports, and then click **+** to expand the list of available ports.
   c. Right-click the COM port where you attached the serial cable to your computer (example: COM1).
   d. Click **Properties**.
   e. On the Port Settings tab, set the serial parameters to the same serial parameters in the printer.
      Check the serial heading of the menu settings page for the printer settings.
   f. Click **OK**, and then close all the windows.
   g. Print a test page to verify printer installation.

Minimizing your printer's environmental impact

Lexmark is committed to environmental sustainability and is continually improving its printers to reduce their impact on the environment. We design with the environment in mind, engineer our packaging to reduce materials, and provide collection and recycling programs. For more information, see:

- The Notices chapter
- The Environmental Sustainability section of the Lexmark Web site at **www.lexmark.com/environment**
- The Lexmark recycling program at **www.lexmark.com/recycle**

By selecting certain printer settings or tasks, you may be able to reduce your printer's impact even further. This chapter outlines the settings and tasks that may yield a greater environmental benefit.

Saving paper and toner

Studies show that as much as 80% of the carbon footprint of a printer is related to paper usage. You can significantly reduce your carbon footprint by using recycled paper and the following printing suggestions, such as printing on both sides of the paper and printing multiple pages on one side of a sheet of paper.

For information on how you can quickly save paper and energy using one printer setting, see “Using Eco-Mode” on page 60.

Using recycled paper

As an environmentally conscious company, Lexmark supports the use of recycled office paper produced specifically for use in laser/LED printers. For more information on recycled papers that work well with your printer, see “Using recycled paper and other office papers” on page 80.

Conserving supplies

Use both sides of the paper

If your printer model supports duplex printing, you can control whether print appears on one or two sides of the paper by selecting **2-sided printing** from the Print dialog or from the Lexmark Toolbar.

Place multiple pages on one sheet of paper

You can print up to 16 consecutive pages of a multiple-page document onto one side of a single sheet of paper by selecting a setting from the Multipage printing (N-Up) section of the Print dialog screen.

Check your first draft for accuracy

Before printing or making multiple copies of a document:

- Use the preview feature, which you can select from the Print dialog or from the Lexmark Toolbar to see how the document will look like before you print it.
- Print one copy of the document to check its content and format for accuracy.

Avoid paper jams

Correctly set the paper type and size to avoid paper jams. For more information, see “Avoiding jams” on page 183.

Print in black and white

To print all text and graphics using only the black print cartridge, set the printer to Black Only. For more information, see “Printing in black and white” on page 89.

Saving energy

Using Eco-Mode

1. Type the printer IP address into the address field of your Web browser.

   If you do not know the IP address of the printer, you can:

   - View the IP address on the printer control panel in the TCP/IP section under the Networks/Ports menu.
   - Print a network setup page or the menu settings pages and locate the IP address in the TCP/IP section.

2. Click **Settings** > **General Settings** > **Eco-Mode** > select a setting > **Submit**.

Choose	To
Off	Use factory default settings for all settings associated with Eco-Mode. This setting supports the performance specifications of your printer.
Energy	Reduce energy use, especially when the printer is idle. • Printer engine motors do not start until it is ready to print. You may notice a short delay before the first page is printed. • The printer enters Sleep mode after one minute of inactivity. • When the printer enters Sleep mode, the printer control panel display and the standard exit bin lights are turned off. • If scanning is supported, the scanner lamps are activated only when a scan job is started.
Energy/Paper	Use all the settings associated with Energy mode and Paper mode.
Paper	• Enable the automatic duplex feature. • Turn off print log features.

Reducing printer noise

To select a Quiet Mode setting using the Embedded Web Server:

1. Type the printer IP address into the address field of your Web browser.

   If you do not know the IP address of the printer, you can:

   - View the IP address on the printer control panel in the TCP/IP section under the Networks/Ports menu.
   - Print a network setup page or the menu settings pages and locate the IP address in the TCP/IP section.

2. Click **Settings** > **General Settings** > **Quiet Mode** > select a setting > **Submit**.

Choose	To
Off **Note:** Selecting **Photo** from the driver may disable Quiet Mode and provide better print quality and full speed printing.	Use factory default settings. This setting supports the performance specifications of your printer.
On	Reduce printer noise. • Print jobs will process at a reduced speed. • Printer engine motors do not start until a document is ready to print. There will be a short delay before the first page is printed. • If your printer has faxing capability, fax sounds are reduced or disabled, including those made by the fax speaker and ringer. The fax is placed in standby mode. • The alarm control and cartridge alarm sounds are turned off. • The printer will ignore the Advance Start command.

Adjusting Sleep Mode

To save energy, you can decrease the number of minutes before the printer enters Sleep Mode.

Available settings range from 2–240 minutes. The factory default setting is 30 minutes.

Using the Embedded Web Server

1. Type the printer IP address or host name in the address field of your Web browser.

   If you do not know the IP address or host name of the printer, then you can:
   - View the information on the printer control panel home screen, or in the TCP/IP section under the Networks/Ports menu.
   - Print a network setup page or menu settings page, and then locate the information in the TCP/IP section.
2. Click **Settings** > **General Settings** > **Timeouts**.
3. In the Sleep Mode field, enter the number of minutes you want the printer to wait before it enters Sleep Mode.
4. Click **Submit**.

Using the printer control panel

1. From the home screen, navigate to:

   > **Settings** > **General Settings** > **Timeouts** > **Sleep Mode**
2. In the Sleep Mode field, select the number of minutes you want the printer to wait before it enters Sleep Mode.
3. Touch .

Using Hibernate Mode

Hibernate is an ultra-low power operating mode. When operating in Hibernate mode, all other systems and devices are powered down safely.

Using the Embedded Web Server

1. Type the printer IP address into the address field of your Web browser.

   If you do not know the IP address of the printer, you can:
   - View the IP address on the printer control panel in the TCP/IP section under the Networks/Ports menu.
   - Print a network setup page or the menu settings pages and locate the IP address in the TCP/IP section.
2. Click **Settings** > **General Settings** > **Sleep Button Settings**.
3. From the Press Sleep Button or Press and Hold Sleep Button drop-down, select **Hibernate**.
4. Click **Submit**.

Using the printer control panel

1. From the home screen, navigate to:

   > **Settings** > **General Settings** > **Press Sleep Button** or **Press and Hold Sleep Button** > **Hibernate**
2. Touch .

Adjusting the brightness of the display

To save energy, or if you are have trouble reading your display, adjust the brightness of the display.

Available settings range from 20–100. The factory default setting is 100.

Using the Embedded Web Server

1. Type the printer IP address into the address field of your Web browser.

   If you do not know the IP address of the printer, you can:
   - View the IP address on the printer control panel in the TCP/IP section under the Networks/Ports menu.
   - Print a network setup page or the menu settings pages and locate the IP address in the TCP/IP section.
2. Click **Settings** > **General Settings**.
3. In the Screen Brightness field, enter the brightness percentage you want for the display.
4. Click **Submit**.

Using the printer control panel

1. From the home screen, navigate to:

   > **Settings** > **General Settings**
2. Touch the down arrow until **`Screen Brightness`** appears, and then select a setting.
3. Touch .

Recycling

Lexmark provides collection programs and environmentally progressive approaches to recycling. For more information, see:

- The Notices chapter
- The Environmental Sustainability section of the Lexmark Web site at **www.lexmark.com/environment**
- The Lexmark recycling program at **www.lexmark.com/recycle**

Recycling Lexmark products

To return Lexmark products for recycling:

1. Visit our Web site at **www.lexmark.com/recycle**.
2. Find the product type you want to recycle, and then select your country or region from the list.
3. Follow the instructions on the computer screen.

Note: Printer supplies and hardware not listed in a Lexmark collection program may be recycled through your local recycling center. Contact your local recycling center to determine the items they accept.

Recycling Lexmark packaging

Lexmark continually strives to minimize packaging. Less packaging helps to ensure that Lexmark printers are transported in the most efficient and environmentally sensitive manner and that there is less packaging to dispose of. These efficiencies result in fewer greenhouse emissions, energy savings, and natural resource savings.

Lexmark cartons are 100% recyclable where corrugated recycling facilities exist. Facilities may not exist in your area.

The foam used in Lexmark packaging is recyclable where foam recycling facilities exist. Facilities may not exist in your area.

When you return a cartridge to Lexmark, you can reuse the box that the cartridge came in. Lexmark will recycle the box.

Returning Lexmark cartridges for reuse or recycling

The Lexmark Cartridge Collection Program diverts millions of Lexmark cartridges from landfills annually by making it both easy and free for Lexmark customers to return used cartridges to Lexmark for reuse or recycling. One hundred percent of the empty cartridges returned to Lexmark are either reused or demanufactured for recycling. Boxes used to return the cartridges are also recycled.

To return Lexmark cartridges for reuse or recycling, follow the instructions that came with your printer or cartridge and use the prepaid shipping label. You can also do the following:

1. Visit our Web site at **www.lexmark.com/recycle**.
2. From the Toner Cartridges section, select your country or region from the list.
3. Follow the instructions on the computer screen.

Loading paper and specialty media

This section explains how to load the 550-sheet tray, an optional 2,000-sheet tray, a multipurpose feeder, and an optional 550-sheet specialty media drawer. It also includes information about paper orientation, setting the paper size and paper type, and linking and unlinking trays.

Setting the paper size and type

The Paper Size setting is automatically sensed according to the position of the paper guides in each tray except the multipurpose feeder. The Paper Size setting for the multipurpose feeder must be set manually from the Paper Size menu. The Paper Type setting must be set manually for all trays that do not contain plain paper.

From the home screen navigate to:

> **Paper Menu** > **Paper Size/Type** > select a tray > select the paper size or type >

The factory default Paper Type setting is Plain Paper.

Configuring Universal paper settings

The Universal Paper Size is a user-defined setting that lets you print on paper sizes that are not preset in the printer menus. Set paper size to Universal for the specified tray when the size you want is not available from the Paper Size menu. Then, specify all of the following Universal size settings for your paper:

- Units of Measure
- Portrait Width
- Portrait Height

Notes:

- The largest supported Universal size is 296.9 x 431.8 mm (11.69 x 17 in.).
- The smallest supported Universal size is 76 x 127 mm (3 x 5 in.) and is loaded only in the multipurpose feeder.

1. From the home screen, navigate to:

   > **Paper Menu** > **Universal Setup** > **Units of Measure** > select a unit of measure

2. Touch **Portrait Width** or **Portrait Height**.
3. Select the width or height, and then touch .

Loading the standard or optional 520-sheet tray

The printer has one standard 520-sheet tray (Tray 1), and may have one or more optional 520-sheet trays. All 520-sheet trays support the same paper sizes and types.

CAUTION—POTENTIAL INJURY: To reduce the risk of equipment instability, load each paper drawer or tray separately. Keep all other drawers or trays closed until needed.

1 Pull the tray out.

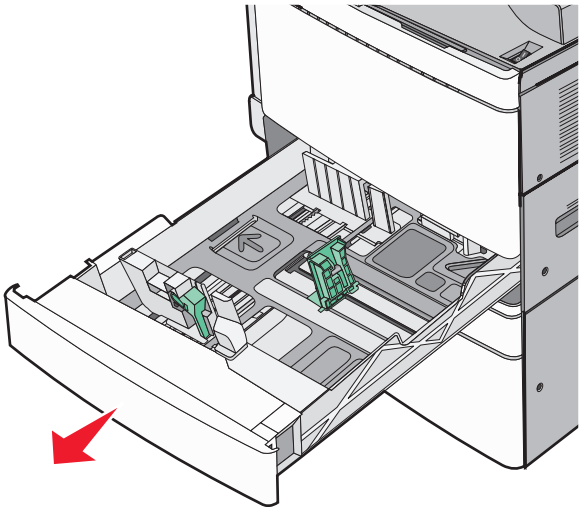

Notice the size indicators at the bottom of the tray. Use these indicators to help position the length and width guides.

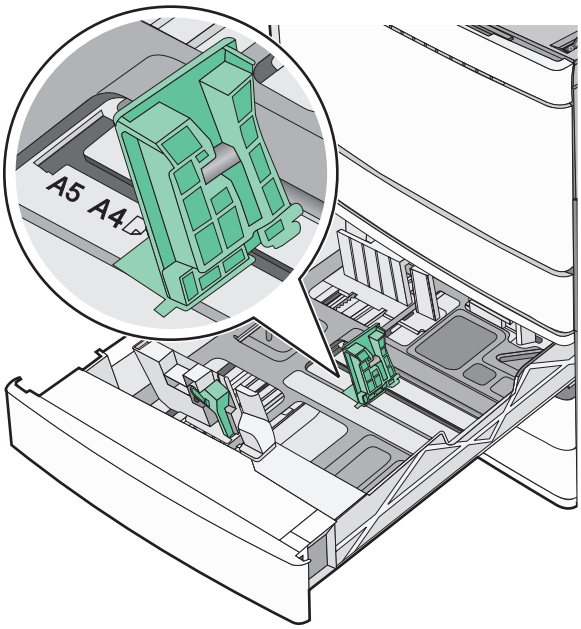

2 Squeeze and then slide the width guide to the correct position for the paper size loaded.

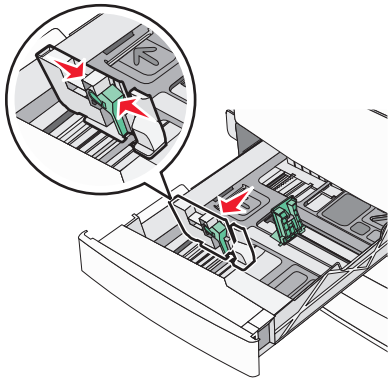

3 Squeeze and then slide the length guide to the correct position for the paper size loaded.

Note: The length guide has a locking device. To unlock, slide the button on top of the length guide down. To lock, slide the button up when a length has been selected.

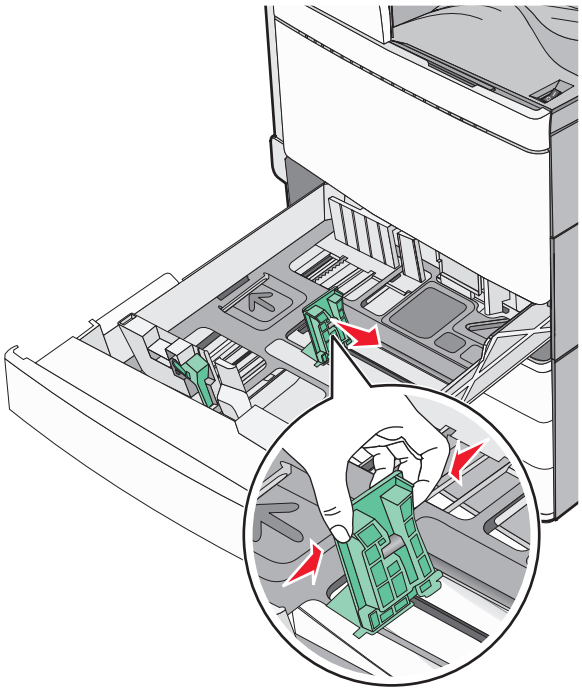

4 Flex the sheets back and forth to loosen them. Do not fold or crease the paper. Straighten the edges on a level surface.

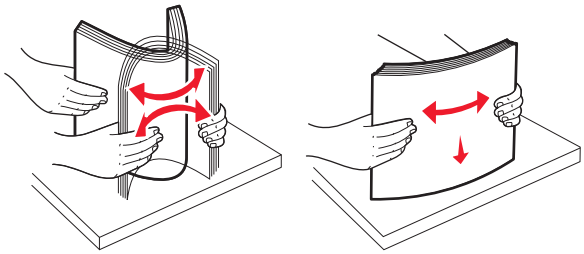

5 Load the paper stack with the recommended print side faceup.

Notes:

- Place print side facedown for duplex printing.
- Place pre-punched paper with the holes toward the front of the tray.
- Place letterheads with the header on the left side of the tray.
- Make sure the paper is below the maximum fill line located on the edge of the paper tray.

Warning—Potential Damage: Overloading the tray can cause paper jams and possible printer damage.

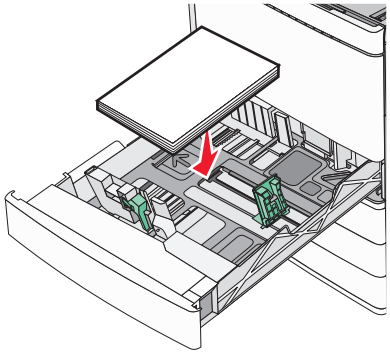

6 Insert the tray.

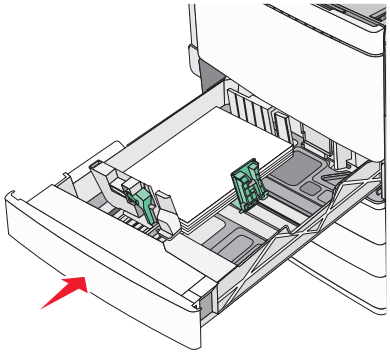

7 From the printer control panel, verify the Paper Size and Paper Type setting for the tray based on the paper you loaded.

Loading the optional 850- and 1,150-sheet trays

The 850- and 1,150-sheet trays support the same paper sizes and types, and require the same process for loading paper.

CAUTION—POTENTIAL INJURY: To reduce the risk of equipment instability, load each paper drawer or tray separately. Keep all other drawers or trays closed until needed.

1 Pull the tray out.

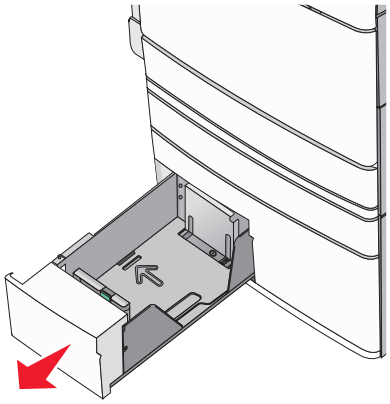

2 Squeeze and then slide the length guide to the correct position for the paper size you are loading.

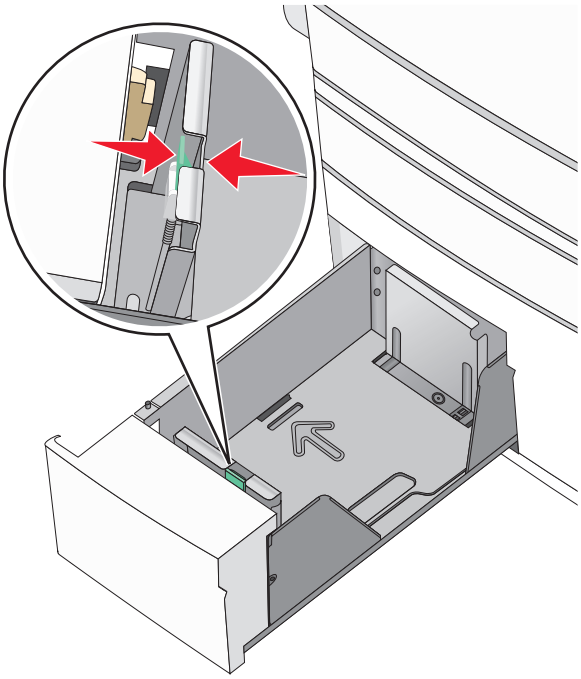

3 Flex the sheets back and forth to loosen them. Do not fold or crease the paper. Straighten the edges on a level surface.

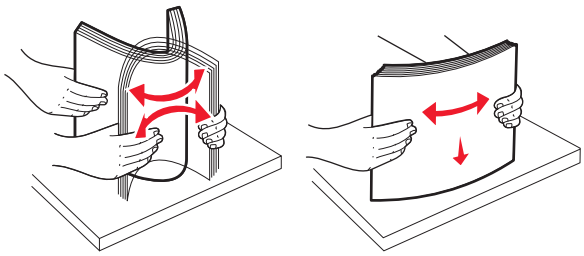

4 Load the paper stack with the recommended print side faceup.

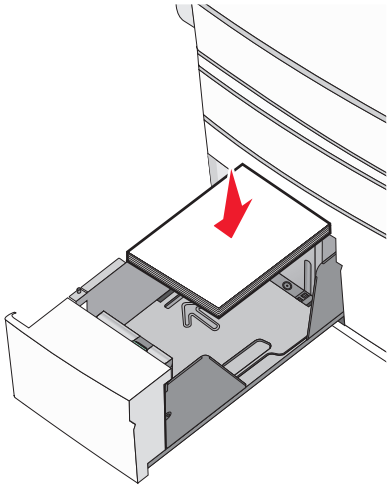

Notes:

- Place print side facedown for duplex printing.
- Place pre-punched paper with the holes toward the front of the tray.
- Place letterheads faceup with the header on the left side of the tray.
- Place letterheads facedown with the header on the right side of the tray for duplex printing.
- Make sure the paper is below the maximum fill line located on the edge of the paper tray.

Warning—Potential Damage: Overloading the tray can cause paper jams and possible printer damage.

5 Insert the tray.

6 From the printer control panel, verify the Paper Size and Paper Type setting for the tray based on the paper you loaded.

Loading the 2000-sheet high-capacity feeder

The high-capacity feeder can hold up to 2,000 sheets of letter-, A4-, and legal-size paper (80 g/m^2 or 20 lb).

1 Pull the tray out.

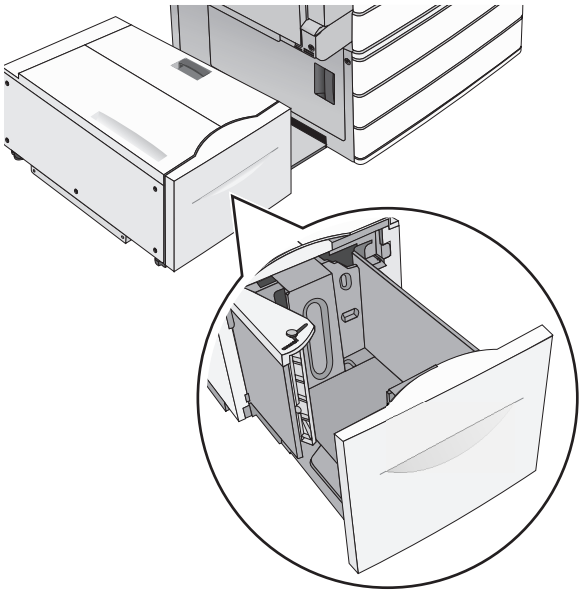

2 Adjust the width guide as necessary.

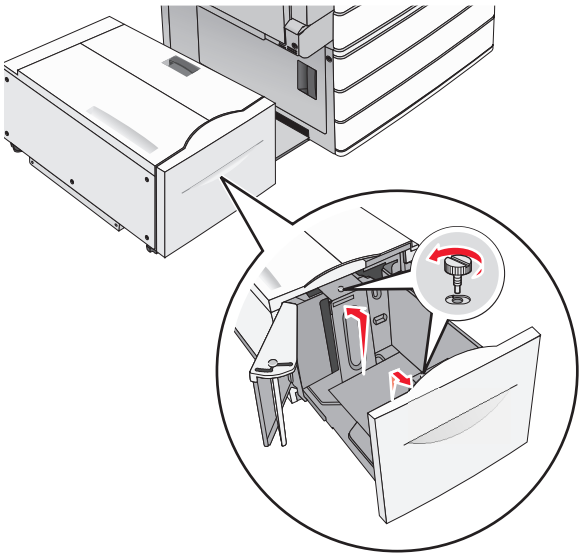

3 Flex the sheets back and forth to loosen them. Do not fold or crease the paper. Straighten the edges on a level surface.

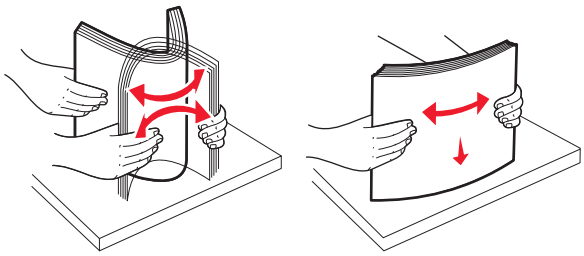

4 Load paper into the tray with the print side faceup.

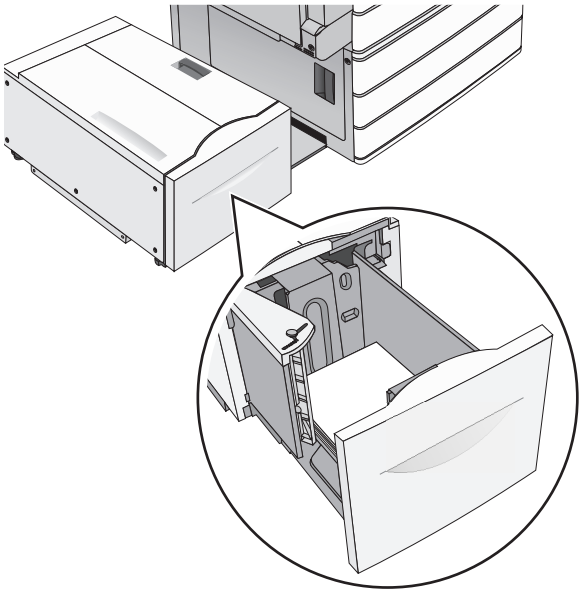

Note: Make sure the paper is below the maximum fill line located on the edge of the paper tray. Overloading the tray can cause paper jams and possible printer damage.

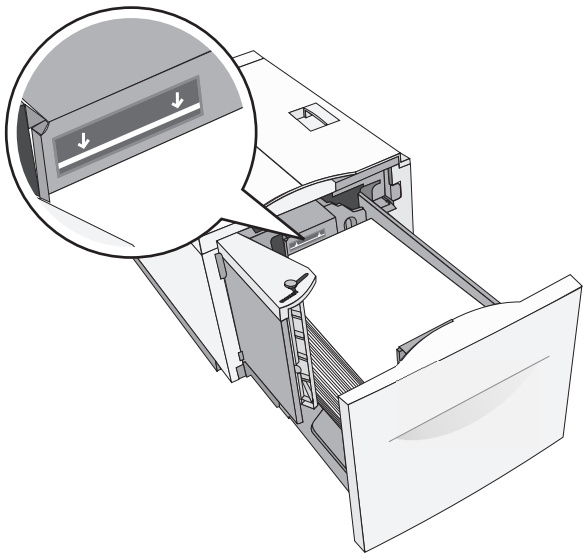

Notes:

- Place pre-punched paper with the holes toward the front of the tray.
- Place letterheads faceup with the header on the left side of the tray.
- Place letterheads facedown with the header on the right side of the tray for duplex printing.

5 Insert the tray.

Loading the multipurpose feeder

The multipurpose feeder can hold several sizes and types of print media, such as transparencies, labels, card stock, and envelopes. It can be used for single-page or manual printing, or as an additional tray.

The multipurpose feeder can hold approximately:

- 100 sheets of 75-g/m^2 (20-lb) paper
- 10 envelopes
- 75 transparencies

The multipurpose feeder accepts paper or specialty media within the following dimensions:

- Width—89 mm (3.5 in.) to 229 mm (9.02 in.)
- Length—127 mm (5 in.) to 1270 mm (50 in.)

Note: Maximum width and length can be applied only to short-edge feeding.

Note: Do not add or remove paper or specialty media when the printer is printing from the multipurpose feeder or when the printer control panel indicator light is blinking. Doing so may cause a jam.

1 Pull down the multipurpose feeder door.

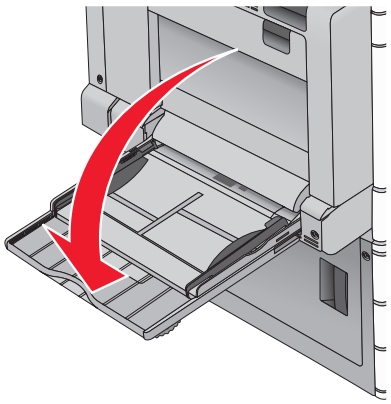

2 For paper or specialty media that is longer than letter-size paper, gently pull the extension until it is fully extended.

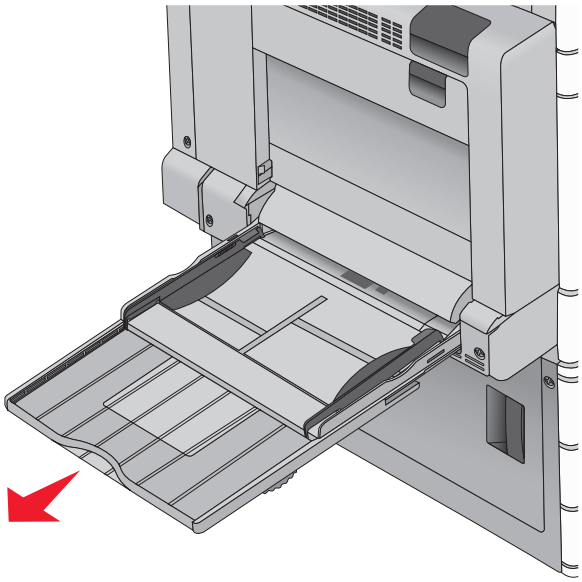

3 Flex the sheets of paper or specialty media back and forth to loosen them. Do not fold or crease them. Straighten the edges on a level surface.

Paper 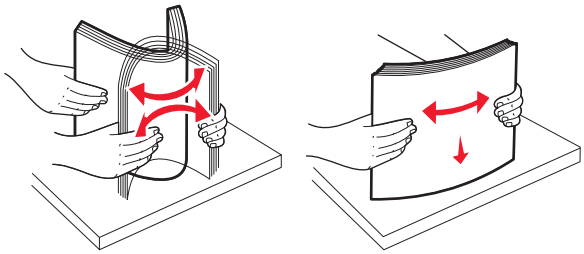
Envelopes 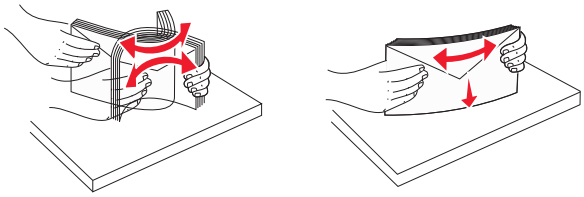
Transparencies **Note:** Avoid scratching or touching the print side. 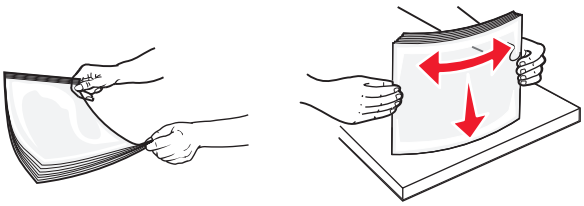

4 Push the paper pick tab, and then load the paper or specialty media. Slide the stack gently into the multipurpose feeder until it comes to a stop, and then release the paper pick tab.

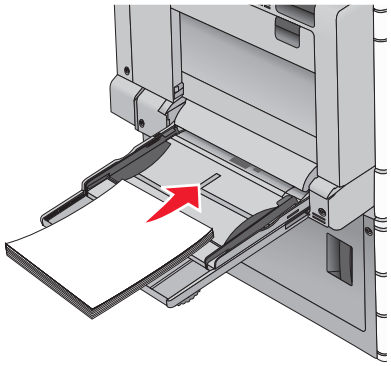

Warning—Potential Damage: Pulling the paper out, without pushing the paper pick tab first, may cause jams or the paper pick tab to break.

- Load paper and transparencies with the recommended print side facedown and the short edge entering the printer first.
- For duplex letterhead printing, place the letterhead faceup and the header entering the printer last.
- Load envelopes with the flap side up and to the right.

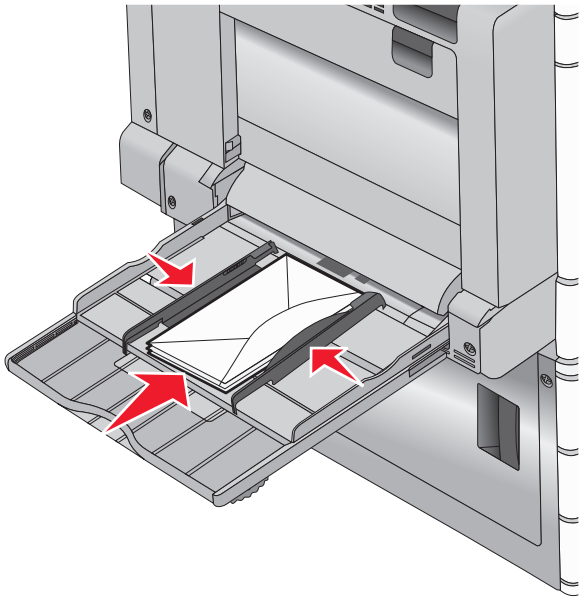

Warning—Potential Damage: Never use envelopes with stamps, clasps, snaps, windows, coated linings, or self-stick adhesives. These envelopes may severely damage the printer.

Notes:

- Do not exceed the maximum stack height by forcing paper or transparencies under the stack height limiter.
- Load only one size and type of paper at a time.

5 Adjust the width guide to lightly touch the edge of the stack. Make sure the paper or specialty media fits loosely in the multipurpose feeder, lies flat, and is not bent or wrinkled.

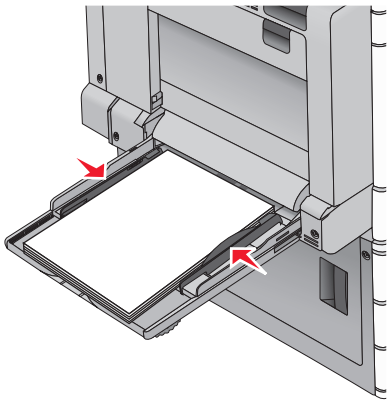

6 From the printer control panel, set the Paper Size and Paper Type for the multipurpose feeder (MP Feeder Size and MP Feeder Type) based on the paper or specialty media loaded.

Linking and unlinking trays

Linking trays

Tray linking is useful for large print jobs or for printing multiple copies. When one linked tray is empty, paper feeds from the next linked tray. When the Paper Size and Paper Type settings are the same for any trays, the trays are automatically linked. The Paper Size setting is automatically sensed according to the position of the paper guides in each tray except Tray 1 and the multipurpose feeder. The Paper Size setting for the multipurpose feeder must be set manually from the Paper Size menu. The Paper Type setting must be set for all trays from the Paper Type menu. The Paper Type menu and the Paper Size menu are both available from the Paper Size/Type menu.

Unlinking trays

Note: Trays that do not have the same settings as any other tray are not linked.

Change one of the following tray settings:

- Paper Type

  Paper Type names describe the paper characteristics. If the name that best describes your paper is used by linked trays, assign a different Paper Type name to the tray, such as Custom Type [x], or define your own custom name.

- Paper Size

  Load a different paper size to automatically change the Paper Size setting for a tray. Paper Size settings for the multipurpose feeder are not automatic; they must be set manually from the Paper Size menu.

Warning—Potential Damage: Do not assign a Paper Type name that does not accurately describe the type of paper loaded in a tray. The temperature of the fuser varies according to the specified Paper Type. Prints may not be properly processed if an inaccurate Paper Type is selected.

Linking exit bins

Link exit bins to create a single output source. The printer automatically uses the next available bin as the output source.

The standard exit bin holds up to 550 sheets of 20-lb paper. If you need additional output capacity, you can purchase other optional exit bins.

Note: Not all exit bins support every paper size and type.

1. From the home screen, navigate to:

   > **Paper Menu** > **Bin Setup**

2. Touch the bin or bins you want to link, and then touch **Configure Bins** > **Link**.

Creating a custom name for a paper type

If the printer is on a network, you can use the Embedded Web Server to define a name other than Custom Type [x] for each of the custom paper types loaded into the printer.

1. Type the printer IP address into the address field of your Web browser.

   Note: If you do not know the IP address of the printer, then you can:
   - View the IP address on the printer control panel in the TCP/IP section under the Networks/Ports menu.
   - Print a network setup page or the menu settings pages and locate the IP address in the TCP/IP section.

2. Click **Settings** > **Paper Menu** > **Custom Name** > type a name > **Submit**.

   Note: This custom name will replace the Custom Type [x] name under the Custom Types and Paper Size and Type menus.

3. Click **Custom Types** > select a paper type > **Submit**.

Assigning a custom paper type name

1. From the home screen, navigate to:

   > **Paper Menu** > **Paper Size/Type**

2. Select the tray number or MP Feeder Type.
3. Touch the left or right arrow until **`Custom Type [x]`** or another custom name appears.
4. Touch .

Configuring a custom name

If the printer is on a network, then you can use the Embedded Web Server to define a name other than Custom Type [x] for each of the custom paper types loaded into the printer.

1. Type the printer IP address in the address field of your Web browser.

   Note: If you do not know the IP address of the printer, then you can:
   - View the IP address on the printer control panel in the TCP/IP section under the Networks/Ports menu.
   - Print a network setup page or the menu settings pages and locate the IP address in the TCP/IP section.

2 Click **Settings** > **Paper Menu** > **Custom Types** > select the custom name you want to configure > select a paper or specialty media type > **Submit**.

Paper and specialty media guide

Paper guidelines

Paper characteristics

The following paper characteristics affect print quality and reliability. Consider these characteristics when evaluating new paper stock.

Weight

The printer can automatically feed paper weights from 60 to 220 g/m^2 (16 to 58 lb bond) grain long. Paper lighter than 60 g/m^2 (16 lb) might not be stiff enough to feed properly, causing jams. For best performance, use 75-g/m^2 (20-lb bond) grain long paper. For paper smaller than 182 x 257 mm (7 x 10 in.), we recommend 90 g/m^2 (24 lb) or heavier paper.

Note: Duplex is supported only for 60-g/m^2–120-g/m^2 (16-lb–32-lb bond) paper.

Curl

Curl is the tendency for paper to curl at its edges. Excessive curl can cause paper feeding problems. Curl can occur after the paper passes through the printer, where it is exposed to high temperatures. Storing paper unwrapped in hot, humid, cold, or dry conditions, even in the trays, can contribute to paper curling prior to printing and can cause feeding problems.

Smoothness

Paper smoothness directly affects print quality. If paper is too rough, toner cannot fuse to it properly. If paper is too smooth, it can cause paper feeding or print quality issues. Always use paper between 100 and 300 Sheffield points; however, smoothness between 150 and 200 Sheffield points produces the best print quality.

Moisture content

The amount of moisture in paper affects both print quality and the ability of the printer to feed the paper correctly. Leave paper in its original wrapper until it is time to use it. This limits the exposure of paper to moisture changes that can degrade its performance.

Condition paper before printing by storing it in its original wrapper in the same environment as the printer for 24 to 48 hours before printing. Extend the time several days if the storage or transportation environment is very different from the printer environment. Thick paper may also require a longer conditioning period.

Grain direction

Grain refers to the alignment of the paper fibers in a sheet of paper. Grain is either *grain long*, running the length of the paper, or *grain short*, running the width of the paper.

For 60- to 135-g/m^2 (16- to 36-lb bond) paper, grain long paper is recommended. For papers heavier than 135 g/m^2, grain short is recommended.

Fiber content

Most high-quality xerographic paper is made from 100% chemically treated pulped wood. This content provides the paper with a high degree of stability resulting in fewer paper feeding problems and better print quality. Paper containing fibers such as cotton can negatively affect paper handling.

Unacceptable paper

The following paper types are not recommended for use with the printer:

- Chemically treated papers used to make copies without carbon paper, also known as carbonless papers, carbonless copy paper (CCP), or no carbon required (NCR) paper
- Preprinted papers with chemicals that may contaminate the printer
- Preprinted papers that can be affected by the temperature in the printer fuser
- Preprinted papers that require a registration (the precise print location on the page) greater than ±2.3 mm (±0.9 in.), such as optical character recognition (OCR) forms

  In some cases, registration can be adjusted with a software application to successfully print on these forms.
- Coated papers (erasable bond), synthetic papers, thermal papers
- Rough-edged, rough or heavily textured surface papers, or curled papers
- Recycled papers that fail EN12281:2002 (European)
- Paper weighing less than 60 g/m^2 (16 lb)
- Multiple-part forms or documents

Selecting paper

Using appropriate paper prevents jams and helps ensure trouble-free printing.

To help avoid jams and poor print quality:

- *Always* use new, undamaged paper.
- Before loading paper, know the recommended print side of the paper. This information is usually indicated on the paper package.
- *Do not* use paper that has been cut or trimmed by hand.
- *Do not* mix paper sizes, types, or weights in the same source; mixing results in jams.
- *Do not* use coated papers unless they are specifically designed for electrophotographic printing.

Selecting preprinted forms and letterhead

Use these guidelines when selecting preprinted forms and letterhead:

- Use grain long for 60 to 90 g/m^2 (16 to 24 lb) weight paper.
- Use only forms and letterhead printed using an offset lithographic or engraved printing process.
- Avoid papers with rough or heavily textured surfaces.

Use papers printed with heat-resistant inks designed for use in xerographic copiers. The ink must be able to withstand temperatures up to 190°C (374°F) without melting or releasing hazardous emissions. Use inks that are not affected by the resin in toner. Inks that are oxidation-set or oil-based generally meet these requirements; latex inks might not. When in doubt, contact the paper supplier.

Preprinted papers such as letterhead must be able to withstand temperatures up to 190°C (374°F) without melting or releasing hazardous emissions.

Using recycled paper and other office papers

As an environmentally conscientious company, Lexmark supports the use of recycled paper produced specifically for use in laser (electrophotographic) printers.

While no blanket statement can be made that all recycled paper will feed well, Lexmark consistently tests papers that represent recycled cut size copier papers available on the global market. This scientific testing is conducted with rigor and discipline. Many factors are taken into consideration both separately and as a whole, including the following:

- Amount of post-consumer waste (Lexmark tests up to 100% post-consumer waste content.)
- Temperature and humidity conditions (Testing chambers simulate climates from all over the world.)
- Moisture content (Business papers should have low moisture: 4–5%.)
- Bending resistance and proper stiffness means optimum feeding through the printer.
- Thickness (impacts how much can be loaded into a tray)
- Surface roughness (measured in Sheffield units, impacts print clarity and how well toner fuses to the paper)
- Surface friction (determines how easily sheets can be separated)
- Grain and formation (impacts curling, which also influences the mechanics of how the paper behaves as it moves through the printer)
- Brightness and texture (look and feel)

Recycled papers are better than ever; however, the amount of recycled content in a paper affects the degree of control over foreign matter. And while recycled papers are one good path to printing in an environmentally responsible manner, they are not perfect. The energy required to de-ink and deal with additives such as colorants and “glue” often generates more carbon emissions than does normal paper production. However, using recycled papers enables better resource management overall.

Lexmark concerns itself with the responsible use of paper in general based on life cycle assessments of its products. To gain a better understanding of the impact of printers on the environment, the company commissioned a number of life cycle assessments and found that paper was identified as the primary contributor (up to 80%) of carbon emissions caused throughout the entire life of a device (from design to end-of-life). This is due to the energy-intensive manufacturing processes required to make paper.

Thus, Lexmark seeks to educate customers and partners on minimizing the impact of paper. Using recycled paper is one way. Eliminating excessive and unnecessary paper consumption is another. Lexmark is well-equipped to help customers minimize printing and copying waste. In addition, the company encourages purchasing paper from suppliers who demonstrate their commitment to sustainable forestry practices.

Lexmark does not endorse specific suppliers, although a converter’s product list for special applications is maintained. However, the following paper choice guidelines will help alleviate the environmental impact of printing:

1. Minimize paper consumption.
2. Be selective about the origin of wood fiber. Buy from suppliers who carry certifications such as the Forestry Stewardship Council (FSC) or The Program for the Endorsement of Forest Certification (PEFC). These certifications guarantee that the paper manufacturer uses wood pulp from forestry operators that employ environmentally and socially responsible forest management and restoration practices.
3. Choose the most appropriate paper for printing needs: normal 75 or 80 g/m^2 certified paper, lower weight paper, or recycled paper.

Unacceptable paper examples

Test results indicate that the following paper types are at risk for use with laser printers:

- Chemically treated papers used to make copies without carbon paper, also known as *carbonless papers*
- Preprinted papers with chemicals that may contaminate the paper
- Preprinted papers that can be affected by the temperature in the printer fuser
- Preprinted papers that require a registration (the precise location on the page) greater than ± 2.3 mm (± 0.9 in.), such as optical character recognition (OCR) forms. In some cases, registration can be adjusted with a software application to successfully print on these forms.)
- Coated papers (erasable bond), synthetic papers, thermal papers
- Rough-edged, rough or heavily textured surface papers or curled papers
- Recycled papers that fail EN12281:2002 (European testing)
- Paper weighing less than 60 g/m^2 (16 lb)
- Multiple part forms or documents

For more information about Lexmark, visit **www.lexmark.com**. General sustainability-related information can be found at the **Environmental Sustainability** link.

Storing paper

Use these paper storage guidelines to help avoid jams and uneven print quality:

- For best results, store paper where the temperature is 21°C (70°F) and the relative humidity is 40%. Most label manufacturers recommend printing in a temperature range of 18 to 24°C (65 to 75°F) with relative humidity between 40 and 60%.
- Store paper in cartons when possible, on a pallet or shelf, rather than on the floor.
- Store individual packages on a flat surface.
- Do not store anything on top of individual paper packages.

Supported paper sizes, types, and weights

The following tables provide information on standard and optional paper input sources and the types of paper they support.

Note: To use a paper size that is unlisted, configure a Universal Paper Size.

For more information, see the *Card Stock & Label Guide* available on the Lexmark Web site at **http://support.lexmark.com**.

Supported paper sizes

Paper size and dimension	520- sheet tray	2,000-sheet drawer	MP feeder	Manual paper	Manual envelope	Duplex
A4 210 x 297 mm (8.27 x 11.7 in.)	✓[1]	✓[1,6]	✓[2,6]	✓[2,6]	X	✓[2]
A5 148 x 210 mm (5.83 x 8.27 in.)	✓[1,5]	X	✓[2,5]	✓[2,5]	X	✓[2,5]
A6 105 x 148 mm (4.13 x 5.83 in.)	X	X	✓[2]	✓[2]	X	X
JIS B5 182 x 257 mm (7.17 x 10.1 in.)	✓[1,6]	✓[1,6]	✓[2,6]	✓[2,6]	X	✓[2,6]
Letter 216 x 279 mm (8.5 x 11 in.)	✓[1]	✓[1,6]	✓[2,6]	✓[2,6]	X	✓[2]
Legal 216 x 356 mm (8.5 x 14 in.)	✓[1]	X	✓[2]	✓[2]	X	✓[2]
Executive 184 x 267 mm (7.25 x 10.5 in.)	✓[1,6]	✓[1,6]	✓[2,6]	✓[2,6]	X	✓[2,6]
JIS B4 257 x 364 mm (10.12 x 14.33 in.)	✓[1]	X	✓[2]	✓[2]	X	✓[2]

[1] Source supports size with *size sensing*.

[2] Source supports size without *size sensing*.

[3] Paper size is supported if set to metric.

[4] Paper size is supported if set to US.

[5] Paper size is supported if loaded in the short edge orientation. The short edge of the paper enters the printer first.

[6] Paper size is supported if loaded in the long edge orientation. The long edge of the paper enter the printer first.

[7] Custom-size envelope printing is not supported.

Paper size and dimension	520- sheet tray	2,000-sheet drawer	MP feeder	Manual paper	Manual envelope	Duplex
A3 297 x 420 mm (11.69 x 16.54 in.)	√[1]	X	√[2]	√[2]	X	√[2]
11x17 279 x 432 mm (11 x 17 in.)	√[1]	X	√[2]	√[2]	X	√[2]
Oficio (México) 216 x 340 mm (8.5 x 13.4 in.)	√[2]	X	√[2]	√[2]	X	√[2]
Folio 216 x 330 mm (8.5 x 13 in.)	√[1]	X	√[2]	√[2]	X	√[2]
Statement 140 x 216 mm (5.5 x 8.5 in.)	√[1,5]	X	√[2,5]	√[2,5]	X	√[2,5]
Universal 64–297 mm x 148– 432 mm (2.52– 11.69 x 5.83–17.01 in.)	√[2]	X	√[2]	√[2]	X	√[2]
7 3/4 Envelope (Monarch) 98 x 191 mm (3.875 x 7.5 in.)	X	X	√[2]	X	√[2]	X
9 Envelope 98 x 226 mm (3.875 x 8.9 in.)	X	X	X	X	X	X
Com 10 Envelope 105 x 241 mm (4.12 x 9.5 in.)	X	X	√[2]	X	√[2]	X
DL Envelope 110 x 220 mm (4.33 x 8.66 in.)	X	X	√[2]	X	√[2]	X
C5 Envelope 162 x 229 mm (6.38 x 9.01 in.)	X	X	√[2]	X	√[2]	X

[1] Source supports size with *size sensing*.

[2] Source supports size without *size sensing*.

[3] Paper size is supported if set to metric.

[4] Paper size is supported if set to US.

[5] Paper size is supported if loaded in the short edge orientation. The short edge of the paper enters the printer first.

[6] Paper size is supported if loaded in the long edge orientation. The long edge of the paper enter the printer first.

[7] Custom-size envelope printing is not supported.

Paper size and dimension	520- sheet tray	2,000-sheet drawer	MP feeder	Manual paper	Manual envelope	Duplex
B5 Envelope 176 x 250 mm (6.93 x 9.84 in.)	**X**	**X**	**X**	**X**	**X**	**X**
Other Envelope [7] 76.22 x 76.22 mm (3 x 3 in.) up to 296.93 x 427.48 mm (11.69 x 16.83 in.)	**X**	**X**	**X**	**X**	**x**	**X**

[1] Source supports size with *size sensing*.

[2] Source supports size without *size sensing*.

[3] Paper size is supported if set to metric.

[4] Paper size is supported if set to US.

[5] Paper size is supported if loaded in the short edge orientation. The short edge of the paper enters the printer first.

[6] Paper size is supported if loaded in the long edge orientation. The long edge of the paper enter the printer first.

[7] Custom-size envelope printing is not supported.

Supported paper types and weights

Printer

The printer supports 60–120-g/m^2 (16–74-lb) paper weights. The duplex unit supports 64–128-g/m^2 (17–34-lb) paper weights.

Note: Labels, transparencies, envelopes, and card stock always print at reduced speed.

Paper type	520- sheet tray	2,000-sheet drawer	MP feeder	Manual paper	Manual envelope	Duplex
Paper • Plain • Bond • Glossy • Heavy Glossy • Colored • Custom Type [x] • Letterhead • Light • Heavy • Preprinted • Rough/Cotton • Recycled	✓	✓	✓	✓	**X**	✓
Card stock	✓	✓	✓	✓	**X**	✓

Paper type	520- sheet tray	2,000-sheet drawer	MP feeder	Manual paper	Manual envelope	Duplex
Transparencies	✓	✓	✓	✓	X	X
Labels • Paper	✓	✓	✓	✓	X	X
Envelopes	X	X	✓	X	✓	X

Finisher

The paper capacity of each exit bin is listed in parentheses. Paper capacity estimations are calculated based on 75-g/m^2 (20-lb) paper.

The finisher standard bin and Bin 1 support 60–220-g/m^2 (16–60-lb) paper weights. Bin 3 (booklet-maker) supports 60–90-g/m^2 (16–24-lb) paper weights plus one additional cover weighted up to 220 g/m^2 (60 lb).

Paper type	Standard 500-sheet bin	Second exit bin	Bin 1	Bin 2	Bin 3
Plain paper	✓	✓	✓	✓	✓
Card stock	✓	✓	✓	✓	X
Transparency	✓	✓	X	X	X
Recycled	✓	✓	✓	✓	X
Glossy	✓	✓	✓	✓	✓
Heavy glossy	✓	✓	✓	✓	✓
Labels	✓	✓	X	X	X
Bond	✓	✓	✓	✓	X
Envelope	✓	✓	X	X	X
Rough envelope	✓	✓	X	X	X
Letterhead	✓	✓	✓	✓	X
Preprinted	✓	✓	✓	✓	X
Colored paper	✓	✓	✓	✓	✓
Light paper	✓	✓	✓	✓	✓
Heavy paper	✓	✓	✓	✓	✓
Rough/Cotton	✓	✓	✓	✓	X
Custom Type [x]	✓	✓	✓	X	X

Supported finishing features

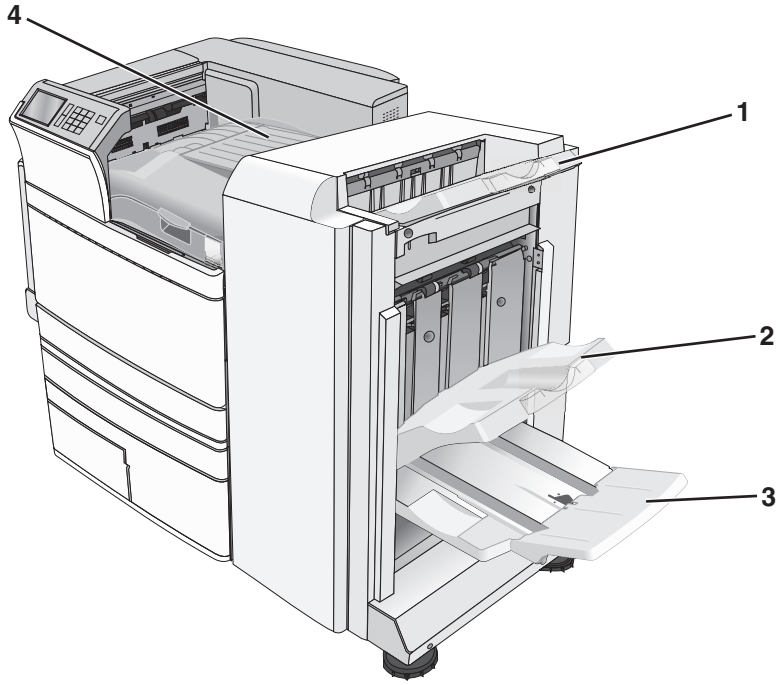

1	Finisher standard bin
2	Finisher bin 1
3	Finisher bin 2 (booklet-maker)
4	Paper transport

Notes:

- The finisher shown is the booklet finisher. Bin 2 is available only when the booklet finisher is installed.
- All paper tray capacities are based on 75-g/m^2 (20-lb) paper.

Paper transport

- The paper capacity is 50 sheets.
- Finishing options are not supported in this bin.
- Envelopes are routed here.
- Universal paper is routed here when it is longer than 483 mm (19 in.) or shorter than 148 mm (6 in.).

Finisher standard bin

- The paper capacity is 500 sheets.
- Envelopes and executive-size paper are not supported in this bin.
- Finishing options are not supported in this bin.

Bin 1

- The paper capacity is 3,000 sheets when the standard finisher is installed.
- The paper capacity is 1,500 sheets when the booklet finisher is installed.

Bin 1 finishing features

Size	Punch*	Offset	Single/Double staple	Double dual staple
A3	✓	✓	✓	✓
A4	✓	✓	✓	✓
A5	X	X	X	X
Executive	✓	✓	✓	X
Folio	X	✓	✓	X
JIS B4	✓	✓	✓	X
JIS B5	✓	✓	✓	X
Legal	X	✓	✓	X
Letter	✓	✓	✓	✓
Statement	X	X	X	✓
Tabloid	✓	✓	✓	X
Universal	✓	✓	✓	✓
Envelopes (any size)	X	X	X	X

* For the Universal paper size, the finishing edge must be at least 9 in. (229 mm) for a 3-hole punch and 10 in. (254 mm) for a 4-hole punch.

Punch—Select from two-, three-, or four-hole punch

Single staple—Use only one staple

Double staple—Use two staples

Double dual staple—Use two sets of two staples. This setting is supported only for widths between 8 in. (203 mm) and 12 in. (297 mm) with lengths between 7 in. (182 mm) and 17 in. (432 mm).

Bin 2 (booklet-maker)

Bin 2 is available only when the booklet finisher is installed. The paper capacity of Bin 2 (booklet-maker) is 300 sheets or 20 sets of 15-sheet booklets.

Bin 2 finishing features

Size	Bi fold	Booklet fold	Saddle staple
A3	✓	✓	✓
A4 (only SEF)	✓	✓	✓
A5	X	X	X

SEF—The paper is loaded in the short edge orientation. The short edge of the paper enters the printer first.

Bi fold—Each page is individually folded and stacked separately.

Booklet fold—A multiple-page job is folded along the center into a single booklet.

Saddle staple—A booklet-fold print job is stapled along the center fold.

Size	Bi fold	Booklet fold	Saddle staple
Executive	**X**	**X**	**X**
Folio	✓	✓	✓
JIS B4	✓	✓	✓
JIS B5	**X**	**X**	**X**
Legal	✓	✓	✓
Letter (only SEF)	✓	✓	✓
Statement	**X**	**X**	**X**
Tabloid	✓	✓	✓
Universal	**X**	**X**	**X**
Envelopes (any size)	**X**	**X**	**X**

SEF—The paper is loaded in the short edge orientation. The short edge of the paper enters the printer first.

Bi fold—Each page is individually folded and stacked separately.

Booklet fold—A multiple-page job is folded along the center into a single booklet.

Saddle staple—A booklet-fold print job is stapled along the center fold.

Printing

This chapter covers printing, printer reports, and job cancelation. The selection and handling of paper and specialty media can affect how reliably documents print. For more information, see “Avoiding jams” on page 183 and “Storing paper” on page 81.

Printing a document

Printing a document

1. From the printer control panel Paper menu, set the Paper Type and Paper Size to match the loaded paper.
2. Send the print job:

For Windows users

a. With a document open, click **File** > **Print**.
b. Click **Properties**, **Preferences**, **Options**, or **Setup**.
c. Adjust settings as necessary.
d. Click **OK** > **Print**.

For Macintosh users

a. Customize the settings as needed in the Page Setup dialog:
   1. With a document open, choose **File** > **Page Setup**.
   2. Choose a paper size or create a custom size to match the loaded paper.
   3. Click **OK**.
b. Customize the settings as needed in the Print dialog:
   1. With a document open, choose **File** > **Print**.
      If necessary, click the disclosure triangle to see more options.
   2. From the Print dialog and pop-up menus, adjust the settings as needed.

      Note: To print on a specific paper type, adjust the paper type setting to match the loaded paper, or select the appropriate tray or feeder.
   3. Click **Print**.

Printing in black and white

From the home screen, navigate to:

> **Settings** > **Print Settings** > **Quality Menu** > **Print Mode** > **Black Only** >

Adjusting toner darkness

1. Type the printer IP address into the address field of your Web browser.

If you do not know the IP address of the printer, you can:

- View the IP address on the printer control panel in the TCP/IP section under the Networks/Ports menu.
- Print a network setup page or the menu settings pages and locate the IP address in the TCP/IP section.

2. Click **Settings** > **Print Settings** > **Quality Menu** > **Toner Darkness**.
3. Adjust the toner darkness setting.
4. Click **Submit**.

Using Max Speed and Max Yield

The Max Speed and Max Yield settings let you choose between a faster print speed or a higher toner yield. Max Yield is the factory default setting.

- **Max Speed**—Prints in color unless Black Only is selected in the driver. Prints in black only if the black only driver setting is selected.
- **Max Yield**—Switches from black to color based on the color content found on each page. Frequent color mode switching can result in slower printing if the content of pages is mixed.

Using the Embedded Web Server

1. Type the printer IP address or host name in the address field of your Web browser.

   If you do not know the IP address or host name of the printer, then you can:

   - View the information on the printer control panel home screen, or in the TCP/IP section under the Networks/Ports menu.
   - Print a network setup page or menu settings page, and then locate the information in the TCP/IP section.

2. Click **Configuration** > **Print Settings** > **Setup Menu**.
3. From the Printer Usage list, select **Max Speed** or **Max Yield**.
4. Click **Submit**.

Using the printer control panel

1. From the home screen, navigate to:

   > **Settings** > **Print Settings** > **Setup Menu**

2. From the Printer Usage list, select **Max Speed** or **Max Yield**.
3. Touch .

Printing from a flash drive

Printing from a flash drive

Notes:

- Before printing an encrypted PDF file, enter the file password from the printer control panel.
- You cannot print files for which you do not have printing permissions.

1 Insert a flash drive into the USB port.

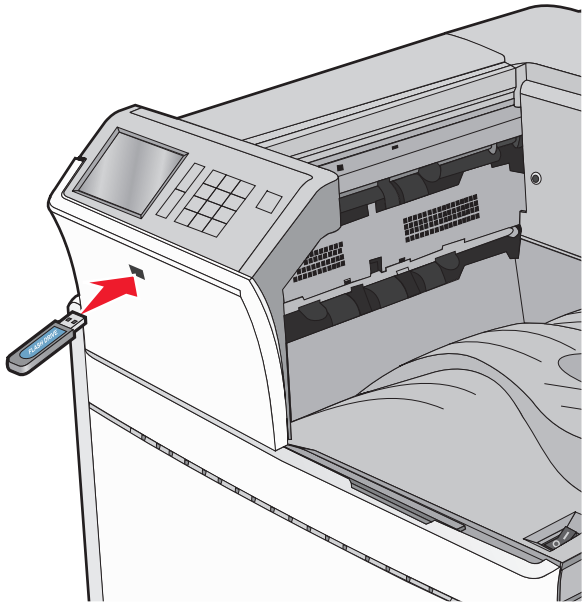

Notes:

- If you insert the flash drive when the printer requires attention, such as when a jam has occurred, then the printer ignores the flash drive.
- If you insert the flash drive while the printer is processing other print jobs, then **Busy** appears. After these print jobs are processed, you may need to view the held jobs list to print documents from the flash drive.

Warning—Potential Damage: Do not touch the USB cable, any network adapter, any connector, the memory device, or the printer in the areas shown while actively printing, reading, or writing from the memory device. A loss of data can occur.

2 From the printer control panel, touch the document you want to print.

3 Touch the arrows to increase the number of copies to print, and then touch **Print**.

Notes:

- Do not remove the flash drive from the USB port until the document has finished printing.
- If you leave the flash drive in the printer after leaving the initial USB menu screen, then you can still print files from the flash drive as held jobs.

Supported flash drives and file types

Flash drive	File type
• Lexar JumpDrive 2.0 Pro (256MB, 512MB, or 1GB sizes) • SanDisk Cruzer Mini (256MB, 512MB, or 1GB sizes) **Notes:** • Hi-Speed USB flash drives must support the Full-Speed standard. Devices supporting only USB low-speed capabilities are not supported. • USB flash drives must support the FAT (*File Allocation Tables*) system. Devices formatted with NTFS (*New Technology File System*) or any other file system are not supported.	Documents: • .pdf • .xps Images: • .dcx • .gif • .JPEG • .jpg • .bmp • .pcx • .TIFF • .tif • .png

Printing specialty documents

Tips on using letterhead

- Use letterhead designed specifically for laser/LED printers.
- Print samples on the letterhead being considered for use before buying large quantities.
- Before loading letterhead, flex the sheets to prevent them from sticking together.
- Page orientation is important when printing on letterhead.

Source	Print side	Paper orientation
Standard and optional trays (simplex printing)	Preprinted letterhead design is placed faceup.	When feeding short edge, the top edge of the sheet with the logo is placed at the right side of the tray. When feeding long-edge, the letter head should go to the rear of the printer.
Standard and optional trays (duplex printing)	Preprinted letterhead design is placed facedown.	The top edge of the sheet with the logo is placed at the right side of the tray.
Multipurpose feeder (simplex printing)	Preprinted letterhead design is placed facedown.	The top edge of the sheet with the logo should enter the multipurpose feeder first.
Multipurpose feeder (duplex printing)	Preprinted letterhead design is placed faceup.	The top edge of the sheet with the logo should enter the multipurpose feeder last.
Note: Check with the manufacturer or vendor to determine whether the chosen preprinted letterhead is acceptable for laser/LED printers.		

Tips on using transparencies

- Print samples on the transparencies being considered for use before buying large quantities.
- Feed transparencies from the standard tray or from the multipurpose feeder.
- From the Paper menu, set the Paper Type to Transparency.
- Use transparencies designed specifically for laser/LED printers. Transparencies must be able to withstand temperatures of 230°C (446°F) without melting, discoloring, offsetting, or releasing hazardous emissions.
- To prevent print quality problems, avoid getting fingerprints on the transparencies.
- Before loading transparencies, flex the stack to prevent sheets from sticking together.
- We recommend Lexmark transparencies. For ordering information, see the Lexmark Web site at **www.lexmark.com**.

Tips on using envelopes

Print samples on the envelopes being considered for use before buying large quantities.

- Use envelopes designed specifically for laser/LED printers. Check with the manufacturer or vendor to ensure that the envelopes can withstand temperatures up to 220°C (446°F) without sealing, wrinkling, curling excessively, or releasing hazardous emissions.
- For best performance, use envelopes made from 90 g/m^2 (24 lb bond) paper or 25% cotton. All-cotton envelopes must not exceed 70 g/m^2 (20 lb bond) weight.
- Use only new envelopes from undamaged packages.
- To optimize performance and minimize jams, do not use envelopes that:
  - Have excessive curl or twist
  - Are stuck together or damaged in any way
  - Have windows, holes, perforations, cutouts, or embossing
  - Have metal clasps, string ties, or folding bars
  - Have an interlocking design
  - Have postage stamps attached
  - Have any exposed adhesive when the flap is in the sealed or closed position
  - Have bent corners
  - Have rough, cockle, or laid finishes
- Adjust the width guides to fit the width of the envelopes.

Note: A combination of high humidity (over 60%) and the high printing temperature may wrinkle or seal envelopes.

Tips on using labels

Notes:

- Single-sided paper labels designed for laser/LED printers are supported for occasional use.
- It is recommended to print no more than 20 pages of paper labels a month.
- Vinyl, pharmacy, and dual-sided labels are not supported.

For detailed information on label printing, characteristics, and design, see the *Card Stock & Label Guide* available on the Lexmark Web site at **http://support.lexmark.com**.

When printing on labels:

- Use labels designed specifically for laser/LED printers. Check with the manufacturer or vendor to verify that:
  - The labels can withstand temperatures up to 210°C (410°F) without sealing, excessive curling, wrinkling, or releasing hazardous emissions.

    Note: Labels can be printed at a higher fusing temperature up to 220°C (428°F) if Label Weight is set to Heavy. Select this setting using the Embedded Web Server, or from the printer control panel Paper menu.
  - Label adhesives, face sheet (printable stock), and topcoats can withstand up to 25 psi (172 kPa) pressure without delaminating, oozing around the edges, or releasing hazardous fumes.
- Do not use labels with slick backing material.
- Use full label sheets. Partial sheets may cause labels to peel off during printing, resulting in a jam. Partial sheets also contaminate the printer and the cartridge with adhesive, and could void the printer and cartridge warranties.
- Do not use labels with exposed adhesive.

- Do not print within 1 mm (0.04 in.) of the edge of the label, of the perforations, or between die-cuts of the label.
- Be sure adhesive backing does not reach to the sheet edge. Zone coating of the adhesive at least 1 mm (0.04 in.) away from edges is recommended. Adhesive material contaminates the printer and could void the warranty.
- If zone coating of the adhesive is not possible, then remove a 1.6 mm (0.06 in.) strip on the leading and driver edge, and use a non-oozing adhesive.
- Portrait orientation works best, especially when printing bar codes.

Tips on using card stock

Card stock is heavy, single-ply specialty media. Many of its variable characteristics, such as moisture content, thickness, and texture, can significantly impact print quality. Print samples on the card stock being considered for use before buying large quantities.

- From the Paper menu, set the Paper Type to Card Stock.
- Select the appropriate Paper Texture setting.
- Be aware that preprinting, perforation, and creasing may significantly affect the print quality and cause jams or other paper handling problems.
- Check with the manufacturer or vendor to ensure the card stock can withstand temperatures up to 220°C (446°F) without releasing hazardous emissions.
- Do not use preprinted card stock manufactured with chemicals that may contaminate the printer. Preprinting introduces semi-liquid and volatile components into the printer.
- Use grain short card stock when possible.

Printing confidential and other held jobs

Storing print jobs in the printer

You can set the printer to store print jobs in the printer memory until you start the print job from the printer control panel.

All print jobs that can be initiated by the user at the printer are called *held jobs*.

Note: Confidential, Verify, Reserve, and Repeat print jobs may be deleted if the printer requires extra memory to process additional held jobs.

Print job type	Description
Confidential	Confidential lets you hold print jobs in the computer until you enter the PIN from the control panel. **Note:** The PIN is set from the computer. It must be four digits, using the numbers 0–9.
Verify	Verify lets you print one copy of a print job while the printer holds the remaining copies. It allows you to examine if the first copy is satisfactory. The print job is automatically deleted from the printer memory once all copies are printed.
Reserve	Reserve allows the printer to store print jobs for printing at a later time. The print jobs are held until deleted from the Help Jobs menu.
Repeat	Repeat prints *and* stores print jobs in the printer memory for reprinting.

Printing confidential and other held jobs

Note: Confidential and Verify print jobs are automatically deleted from memory after printing. Repeat and Reserve jobs are held in the printer until you choose to delete them.

For Windows users

1. With a document open, click **File** > **Print**.
2. Click **Properties**, **Preferences**, **Options**, or **Setup**.
3. Click **Print and Hold**.
4. Select the print job type (Confidential, Repeat, Reserve, or Verify), and then assign a user name. For a confidential print job, also enter a four-digit PIN.
5. Click **OK** or **Print**.
6. From the printer home screen, release the print job.
   - For confidential print jobs, navigate to:
     Held jobs > your user name > **Confidential Jobs** > enter PIN > select print job > specify number of copies > **Print**
   - For other print jobs, navigate to:
     Held jobs > your user name > select print job > specify number of copies > **Print**

For Macintosh users

1. With a document open, choose **File** > **Print**.
   If necessary, click the disclosure triangle to see more options.
2. From the print options or Copies & Pages pop-up menu, choose **Job Routing**.
3. Select the print job type (Confidential, Repeat, Reserve, or Verify), and then assign a user name. For a confidential print job, also enter a four-digit PIN.
4. Click **OK** or **Print**.
5. From the printer home screen, release the print job.
   - For confidential print jobs, navigate to:
     Held jobs > your user name > **Confidential Jobs** > enter PIN > select print job > specify number of copies > **Print**
   - For other print jobs, navigate to:
     Held jobs > your user name > select print job > specify number of copies > **Print**

Printing information pages

Printing a font sample list

1. From the home screen, navigate to:
   > **Reports** > **Print Fonts**
2. Touch **PCL Fonts** or **PostScript Fonts**.

Printing a directory list

A directory list shows the resources stored in a flash memory or on the printer hard disk.

From the home screen, navigate to:

> **Reports** > **Print Directory**

Canceling a print job

There are several methods for canceling a print job. The following sections explain how to cancel a print job from the printer control panel, or from a computer depending on the operating system.

Canceling a print job from the printer control panel

1. Touch **Cancel Jobs** on the touch screen, or press on the keypad.
2. Touch the job you want to cancel, and then touch **Delete Selected Jobs**.

Canceling a print job from the computer

For Windows users

1. Open the printers folder:
   a. Click , or click **Start** and then click **Run**.
   b. In the Start Search or Run box, type `control printers`.
   c. Press **Enter**, or click **OK**.
2. Double-click the printer icon.
3. Select the print job you want to cancel.
4. From the keyboard, press **Delete**.

For Macintosh users

In Mac OS X version 10.5 or later:

1. From the Apple menu, choose **System Preferences** > **Print & Fax** > **Open Print Queue**.
2. From the printer window, select the print job you want to cancel.
3. From the icon bar at the top of the window, click the **Delete** icon.

In Mac OS X version 10.4 or earlier:

1. From the Finder, navigate to:

   Go > **Applications**
2. Double-click **Utilities** > **Print Center** or **Printer Setup Utility**.
3. Double-click the printer icon.

4 From the printer window, select the print job you want to cancel.

5 From the icon bar at the top of the window, click the **Delete** icon.

Understanding printer menus

Menus list

Supplies

Cyan Cartridge
Magenta Cartridge
Yellow Cartridge
Black Cartridge
Cyan Photoconductor Unit
Magenta Photoconductor Unit
Yellow Photoconductor Unit
Black Photoconductor Unit
Waste Toner Bottle
Fuser
Transfer Module
Staple Cartridge
Hole Punch Box

Paper Menu

Default Source
Paper Size/Type
Configure MP
Substitute Size
Paper Texture
Paper Weight
Paper Loading
Custom Types
Custom Names
Custom Bin Names
Universal Setup
Bin Setup

Reports

Menu Settings Page
Device Statistics
Network Setup Page
Network [x] Setup Page
Profiles List
Print Fonts
Print Directory
Print Demo
Asset Report

Settings

General Settings
Flash Drive
Setup
Job Accounting
Finishing
Quality
Utilities
XPS
PDF
PostScript
PCL Emul
HTML
Image
PictBridge

Security

Miscellaneous Security Settings
Confidential Print
Disk Wiping
Security Audit Log
Set Date and Time

Network/Ports

Active NIC
Network*
Standard USB
Parallel [x]
Serial [x]
SMTP Setup

Help

Print All Guides
Color Quality
Print Quality
Printing Guide
Media Guide
Print Defects Guide
Menu Map
Information Guide
Connection Guide
Moving Guide
Supplies Guide

* Depending on the printer setup, this menu appears as Standard Network, Wireless Network, or Network [x].

Supplies menu

Menu item	Description
Cyan Cartridge Early Warning Low Invalid Replace Missing or Defective OK Unsupported	Shows the status of the cyan print cartridge
Magenta Cartridge Early Warning Low Invalid Replace Missing or Defective OK Unsupported	Shows the status of the magenta print cartridge
Yellow Cartridge Early Warning Low Invalid Replace Missing or Defective OK Unsupported	Shows the status of the yellow print cartridge
Black Cartridge Early Warning Low Invalid Replace Missing or Defective OK Unsupported	Shows the status of the black print cartridge
Cyan Photoconductor Unit Early Warning Low Replace Missing OK	Shows the status of the cyan photoconductor unit

Menu item	Description
Magenta Photoconductor Unit Early Warning Low Replace Missing OK	Shows the status of the magenta photoconductor unit
Yellow Photoconductor Unit Early Warning Low Replace Missing OK	Shows the status of the yellow photoconductor unit
Black Photoconductor Unit Early Warning Low Replace Missing OK	Shows the status of the black photoconductor unit
Waste Toner Bottle Near Full Replace Missing OK	Shows the status of the waste toner bottle
Fuser Early Warning Low Replace Missing OK	Shows the status of the fuser
Transfer module Early Warning Low Replace Missing OK	Shows the status of the transfer module
Staple Cartridge Early Warning Low Replace Missing OK	Shows the status of the staple cartridge

Menu item	Description
Hole Punch Box Near Full Replace Missing OK	Shows the status of the hole punch box

Paper menu

Default Source menu

Menu item	Description
Default Source Tray [x] MP Feeder Manual Paper Manual Envelope	Sets a default paper source for all print jobs **Notes:** • Tray 1 (standard tray) is the factory default setting. • From the Paper menu, Configure MP feeder must be set to Cassette for MP feeder to appear as a menu setting. • If the same size and type of paper are in two trays and the Paper Size and Paper Type settings match, then the trays are automatically linked. When one tray is empty, the print job continues using the linked tray.

Paper Size/Type menu

Menu item	Description
Tray [x] Size Letter Legal Executive JIS-B4 A3 11 x 17 Oficio (México) Folio Statement Universal A4 A5 A6 JIS B5	Specifies the paper size loaded in each tray **Notes:** • Letter is the US factory default setting. A4 is the international factory default setting. • For trays with automatic size sensing, only the size detected by the hardware appears. • If the same size and type of paper are in two trays and the Paper Size and Paper Type settings match, then the trays are automatically linked. When one tray is empty, the print job uses the linked tray.
Note: Only installed trays are listed in this menu.	

Menu item	Description
Tray [x] Type Plain Paper Card Stock Transparency Recycled Glossy Heavy Glossy Labels Bond Envelope Rough Envelope Letterhead Preprinted Colored Paper Light Paper Heavy Paper Rough/Cotton Paper Custom Type [x]	Specifies the paper type loaded in each tray **Notes:** • Plain Paper is the factory default setting for Tray 1. Custom Type [x] is the factory default setting for all other trays. • If available, then a user-defined name will appear instead of Custom Type [x]. • Use this menu to configure automatic tray linking.
MP Feeder Size Letter Legal Executive JIS-B4 A3 11 x 17 Oficio (México) Folio Statement Universal 7 3/4 Envelope 10 Envelope DL Envelope C5 Envelope Other Envelope A4 A5 A6 JIS B5	Specifies the paper size loaded in the multipurpose feeder **Notes:** • Letter is the US factory default setting. A4 is the international factory default setting. • From the Paper menu, Configure MP Feeder must be set to Cassette for MP Feeder to appear as a menu. • Other Envelope printing is not supported.
Note: Only installed trays are listed in this menu.	

Menu item	Description
MP Feeder Type Custom Type [x] Plain Paper Card Stock Transparency Recycled Glossy Heavy Glossy Labels Bond Envelope Rough Envelope Letterhead Preprinted Colored Paper Light Paper Heavy Paper Rough/Cotton Paper	Specifies the paper type loaded in the multipurpose feeder **Notes:** • Custom Type [x] is the factory default setting. • From the Paper menu, Configure MP Feeder must be set to Cassette for MP Feeder Type to appear as a menu setting.
Manual Paper Size Letter Legal Executive JIS-B4 A3 11 x 17 Oficio (México) Folio Statement Universal A4 A5 A6 JIS B5	Specifies the paper size being manually loaded **Note:** Letter is the US factory default setting. A4 is the international factory default setting.
Note: Only installed trays are listed in this menu.	

Menu item	Description
Manual Paper Type Plain Paper Card Stock Transparency Recycled Glossy Heavy Glossy Labels Bond Letterhead Preprinted Colored Paper Light Paper Heavy Paper Rough/Cotton Paper Custom Type [x]	Specifies the paper type being manually loaded **Note:** Plain Paper is the factory default setting.
Manual Envelope Size 10 Envelope DL Envelope C5 Envelope Other Envelope 7 3/4 Envelope	Specifies the envelope size being manually loaded **Notes:** • 10 Envelope is the US factory default setting. DL Envelope is the international factory default setting.Printing a custom size envelope is not supported. • Other Envelope printing is not supported.
Manual Envelope Type Envelope Rough Envelope Custom Type [x]	Specifies the envelope type being manually loaded **Note:** Envelope is the factory default setting.
Note: Only installed trays are listed in this menu.	

Configure MP menu

Menu item	Description
Configure MP Cassette Manual First	Determines when the printer selects paper from the multipurpose feeder **Notes:** • Cassette is the factory default setting. Cassette configures the multipurpose feeder as the automatic paper source. • Manual sets the multipurpose feeder only for manual feed print jobs. • First configures the multipurpose feeder as the primary paper source.

Substitute Size menu

Menu item	Description
Substitute Size All Listed Off Statement/A5 Letter/A4 11 x 17/A3	Substitutes a specified paper size if the requested paper size is not available **Notes:** • All Listed is the factory default setting. All available substitutions are allowed. • Off indicates that no size substitutions are allowed. • Setting a size substitution lets the print job continue without a Change Paper message appearing.

Paper Texture menu

Menu item	Description
Plain Texture Normal Rough Smooth	Specifies the relative texture of the paper loaded
Card Stock Texture Normal Rough Smooth	Specifies the relative texture of the card stock loaded **Note:** Settings appear only if card stock is supported.
Transparency Texture Normal Rough Smooth	Specifies the relative texture of the transparencies loaded
Recycled Texture Normal Rough Smooth	Specifies the relative texture of the recycled paper loaded
Glossy Texture Normal Rough Smooth	Specifies the relative texture of the glossy paper loaded
Heavy Glossy Texture Normal Rough Smooth	Specifies the relative texture of the glossy paper loaded
Note: Normal is the factory default setting for all paper types except bond, rough envelope and rough/cotton paper.	

Menu item	Description
Labels Texture Normal Rough Smooth	Specifies the relative texture of the labels loaded
Bond Texture Rough Smooth Normal	Specifies the relative texture of the bond paper loaded
Envelope Texture Normal Rough Smooth	Specifies the relative texture of the envelopes loaded
Rough Envelope Texture Rough	Specifies the relative texture of the envelopes loaded
Letterhead Texture Normal Rough Smooth	Specifies the relative texture of the letterhead loaded
Preprinted Texture Normal Rough Smooth	Specifies the relative texture of the preprinted paper loaded
Colored Texture Normal Rough Smooth	Specifies the relative texture of the colored paper loaded
Light Texture Normal Rough Smooth	Specifies the relative texture of the paper loaded
Heavy Texture Normal Rough Smooth	Specifies the relative texture of the paper loaded
Rough/Cotton Texture Rough	Specifies the relative texture of the cotton paper loaded
Custom [x] Texture Normal Rough Smooth	Specifies the relative texture of the custom paper loaded **Note:** Settings appear only if the custom type is supported.
Note: Normal is the factory default setting for all paper types except bond, rough envelope and rough/cotton paper.	

Paper Weight menu

Menu item	Description
Plain Weight Normal Heavy Light	Specifies the relative weight of the plain paper loaded
Card Stock Weight Normal Heavy Light	Specifies the relative weight of the card stock loaded **Note:** Settings appear only when card stock is supported.
Transparency Weight Normal Heavy Light	Specifies the relative weight of the transparencies loaded
Recycled Weight Normal Heavy Light	Specifies the relative weight of the recycled paper loaded
Glossy Weight Normal Heavy Light	Specifies the relative weight of the glossy paper loaded
Heavy Glossy Weight Heavy	Specifies the relative weight of the glossy paper loaded **Note:** Heavy is the factory default setting.
Labels Weight Normal Heavy Light	Specifies the relative weight of the labels loaded
Bond Weight Normal Heavy Light	Specifies the relative weight of the bond paper loaded
Envelope Weight Normal Heavy Light	Specifies the relative weight of the envelope loaded
Rough Envelope Weight Heavy Light Normal	Specifies the relative weight of the envelope loaded **Note:** Heavy is the factory default setting.
Note: Normal is the factory default setting for all paper types unless specified otherwise.	

Menu item	Description
Letterhead Weight Normal Heavy Light	Specifies the relative weight of the letterhead loaded
Preprinted Weight Normal Heavy Light	Specifies the relative weight of the preprinted paper loaded
Colored Weight Normal Heavy Light	Specifies the relative weight of the colored paper loaded
Light Weight Light	Specifies the relative weight of the paper loaded **Note:** Light is the factory default setting.
Heavy Weight Heavy	Specifies the relative weight of the paper loaded **Note:** Heavy is the factory default setting.
Rough/Cotton Weight Normal Heavy Light	Specifies the relative weight of the cotton paper loaded
Custom [x] Weight Normal Heavy Light	Specifies the relative weight of the custom paper loaded **Note:** The selections appear only when the custom type is supported.
Note: Normal is the factory default setting for all paper types unless specified otherwise.	

Paper Loading menu

Menu item	Description
Card Stock Loading Off Duplex	Determines whether 2-sided printing occurs for all print jobs that specify Card Stock as the paper type
Recycled Loading Off Duplex	Determines whether 2-sided printing occurs for all print jobs that specify Recycled as the paper type

Notes:

- Duplex sets the printer default to 2-sided printing for every print job unless 1-sided printing is selected from Print Properties.
- If Duplex is selected, then all print jobs are sent through the duplex unit, including 1-sided print jobs.
- Off is the factory default setting for all Paper Loading menu selections.

Menu item	Description
Glossy Loading Off Duplex	Determines whether 2-sided printing occurs for all print jobs that specify Glossy as the paper type
Labels Loading Off Duplex	Determines whether 2-sided printing occurs for all print jobs that specify Labels as the paper type
Bond Loading Off Duplex	Determines whether 2-sided printing occurs for all print jobs that specify Bond as the paper type
Letterhead Loading Off Duplex	Determines whether 2-sided printing occurs for all print jobs that specify Letterhead as the paper type
Preprinted Loading Off Duplex	Determines whether 2-sided printing occurs for all print jobs that specify Preprinted as the paper type
Colored Loading Off Duplex	Determines whether 2-sided printing occurs for all print jobs that specify Colored as the paper type
Light Loading Off Duplex	Determines whether 2-sided printing occurs for all print jobs that specify Light as the paper type
Heavy Loading Off Duplex	Determines whether 2-sided printing occurs for all print jobs that specify Heavy as the paper type
Rough/Cotton Loading Off Duplex	Determines whether 2-sided printing occurs for all print jobs that specify Rough or Cotton as the paper type
Custom [x] Loading Off Duplex	Determines whether 2-sided printing occurs for all print jobs that specify Custom [x] as the paper type **Note:** Custom [x] Loading is available only if the custom paper type is supported.

Notes:

- Duplex sets the printer default to 2-sided printing for every print job unless 1-sided printing is selected from Print Properties.
- If Duplex is selected, then all print jobs are sent through the duplex unit, including 1-sided print jobs.
- Off is the factory default setting for all Paper Loading menu selections.

Custom Types menu

Menu item	Description
Custom Type [x] Paper Card Stock Letterhead Transparency Glossy Rough/Cotton Labels Bond Envelope	Associates a paper or specialty media type with a factory default **Custom Type [x]** name or a user-defined custom name created from the Embedded Web Server or from MarkVision™ Professional **Notes:** • Paper is the factory default setting. • The custom paper type must be supported by the selected tray or multipurpose feeder in order to print from that source.
Recycled Paper Card Stock Letterhead Transparency Glossy Rough/Cotton Labels Bond Envelope	Specifies a paper type when the Recycled setting is selected in other menus **Notes:** • Paper is the factory default setting. • The custom paper type must be supported by the selected tray or multipurpose feeder in order to print from that source.

Custom Names menu

Menu item	Definition
Custom Name [x] [none]	Specify a custom name for a paper type. This name replaces the **Custom Type [x]** name in the printer menus.

Custom Bin Names menu

Menu Item	Description
Standard Bin	Specifies a custom name for the Standard Bin
Bin [x]	Specifies a custom name for Bin [x]

Universal Setup menu

Menu item	Description
Units of Measure Inches Millimeters	Identifies the unit of measure **Note:** Inches is the US factory default setting. Millimeters is the international factory default setting.

Menu item	Description
Portrait Width 3–48 inches 76–1219 mm	Sets the portrait width **Notes:** • 11.69 inches is the US factory default setting. Inches can be increased in 0.01-inch increments. • 296.9 mm is the international factory default setting. Millimeters can be increased in 1-mm increments. • If the width exceeds the maximum, then the printer uses the maximum width allowed.
Portrait Height 3–48 inches 76–1219 mm	Sets the portrait height **Notes:** • 48 inches is the US factory default setting. Inches can be increased in 0.01-inch increments. • 1219 mm is the international factory default setting. Millimeters can be increased in 1-mm increments. • If the height exceeds the maximum, then the printer uses the maximum height allowed.
Feed Direction Short Edge Long Edge	Specifies the feed direction **Notes:** • Short Edge is the factory default setting. • Long Edge appears only if the longest edge is shorter than the maximum width supported by the tray.

Bin Setup menu

Menu item	Description
Output Bin Standard Bin Bin [x]	Specifies the default exit bin **Note:** Standard Bin is the factory default setting.
Configure Bins Mailbox Link Link Optional Type Assignment	Specifies configuration options for exit bins **Notes:** • Mailbox is the factory default setting. This setting treats each bin as a separate mailbox. • Link configures all available bins as one large exit bin. • Link Optional links together all available exit bins except the standard bin and only appears when at least two optional bins are installed. • Type Assignment assigns each paper type to an output bin or linked bin set. • Bins assigned the same name are automatically linked unless Link Optional is selected.

Menu item	Description
Overflow Bin Standard Bin Bin [x]	Specifies an alternate exit bin when a designated bin is full **Note:** Standard Bin is the factory default setting.
Assign Type/Bin Plain Paper Bin Card Stock Bin Transparency Bin Recycled Bin Glossy Bin Heavy Glossy Bin Labels Bin Bond Bin Envelope Bin Rough Envelope Bin Letterhead Bin Preprinted Bin Colored Bin Light Paper Bin Heavy Paper Bin Rough/Cotton Bin Custom [x] Bin	Selects an exit bin for each supported paper type Available selections for each type are: Disabled Standard Bin Bin [x] **Note:** Disabled is the factory default setting.

Reports menu

Reports menu

Menu item	Description
Menu Settings Page	Prints a report containing information about the paper loaded into trays, installed memory, total page count, alarms, timeouts, printer control panel language, TCP/IP address, status of supplies, status of the network connection, and other information
Device Statistics	Prints a report containing printer statistics such as supply information and details about printed pages
Network Setup Page	Prints a report containing information about the network printer settings, such as the TCP/IP address information **Note:** This menu item appears only in network printers or in printers connected to print servers.

Menu item	Description
Network [x] Setup Page	Prints a report containing information about the network printer settings, such as the TCP/IP address information **Notes:** • This selection is available when more than one network option is installed. • This menu item appears only in network printers or in printers connected to print servers.
Profiles List	Prints a list of profiles stored in the printer
Print Fonts PCL Fonts PostScript Fonts	Prints a report of all the fonts available for the printer language currently set in the printer **Note:** A separate list is available for PCL and PostScript emulations.
Print Directory	Prints a list of all the resources stored on an optional flash memory card or printer hard disk **Notes:** • Job Buffer Size must be set to 100%. • Make sure the optional flash memory or printer hard disk is installed correctly and working properly.
Asset Report	Prints a report containing printer asset information, such as serial number and model name **Note:** The report contains text and UPC barcodes that can be scanned into an asset database.

Network/Ports menu

Active NIC menu

Menu item	Description
Active NIC Auto [list of available network cards]	**Notes:** • Auto is the factory default setting. • This menu item appears only if an optional network card is installed.

Standard Network or Network [x] menus

Note: Only active ports appear in this menu; all inactive ports are omitted.

Menu item	Description
PCL SmartSwitch On Off	Sets the printer to automatically switch to PCL emulation when a print job requires it, regardless of the default printer language **Notes:** • On is the factory default setting. • When Off is used, the printer does not examine incoming data. The printer uses PostScript emulation if PS SmartSwitch is set to On. It uses the default printer language specified in the Setup menu if PS SmartSwitch is set to Off.
PS SmartSwitch On Off	Sets the printer to automatically switch to PS emulation when a print job requires it, regardless of the default printer language **Notes:** • On is the factory default setting. • When Off is used, the printer does not examine incoming data. The printer uses PCL emulation if PCL SmartSwitch is set to On. It uses the default printer language specified in the Setup menu if PCL SmartSwitch is set to Off.
NPA Mode Auto Off	Sets the printer to perform the special processing required for bidirectional communication following the conventions defined by the NPA protocol **Notes:** • Auto is the factory default setting. • Changing this setting from the printer control panel and then exiting the menus causes the printer to restart. The menu selection is then updated.
Network Buffer Auto 3KB to [maximum size allowed]	Sets the size of the network input buffer **Notes:** • Auto is the factory default setting. • The value can be changed in 1-KB increments. • The maximum size allowed depends on the amount of memory in the printer, the size of the other link buffers, and whether Resource Save is set to On or Off. • To increase the maximum size range for the Network Buffer, disable or reduce the size of the parallel, serial, and USB buffers. • Changing this setting from the printer control panel and then exiting the menus causes the printer to restart. The menu selection is then updated.
Job Buffering Off On Auto	Temporarily stores print jobs on the printer hard disk before printing. This menu only appears if a formatted disk is installed. **Notes:** • Off is the factory default setting. • On buffers print jobs on the printer hard disk. • Auto buffers print jobs only if the printer is busy processing data from another input port. • Changing this setting from the printer control panel and then exiting the menus causes the printer to restart. The menu selection is then updated.

Menu item	Description
Mac Binary PS Auto On Off	Sets the printer to process Macintosh binary PostScript print jobs **Notes:** • Auto is the factory default setting. • Off filters print jobs using the standard protocol. • On processes raw binary PostScript print jobs.
Standard Network Setup Reports Network Card TCP/IP IPv6 Wireless AppleTalk	Displays and sets the printer network settings. **Note:** The Wireless menu appears only when the printer is connected to a wireless network.
Network [x] Setup Reports Network Card TCP/IP IPv6 Wireless AppleTalk	

Network Reports menu

This menu is available from the Network/Ports menu:

Network/Ports > **Standard Network** or **Network [x]** > **Standard Network Setup** or **Network [x] Setup** > **Reports** or **Network Reports**

Menu item	Description
Print Setup Page	Prints a report containing information about the network printer settings, such as the TCP/IP address

Network Card menu

This menu is available from the Network/Ports menu:

Network/Ports > **Standard Network** or **Network [x]** > **Standard Network Setup** or **Network [x] Setup** > **Network Card**

Menu item	Description
View Card Status Connected Disconnected	Lets you view the connection status of the Network Card
View Card Speed	Lets you view the speed of a currently active network card

Menu item	Description
View Network Address UAA LAA	Lets you view the network addresses
End-of-Job Timeout 0–225	Sets the amount of time in seconds before a network print job is canceled **Notes:** • 90 seconds is the factory default setting. • 0 disables the timeout. • If a value of 1–9 is selected, then the setting is saved as 10.
Banner Page Off On	Allows the printer to print a banner page **Note:** Off is the factory default setting.

TCP/IP menu

This menu is available from the Network/Ports menu:

Network/Ports > **Standard Network** or **Network [x]** > **Standard Network Setup** or **Network [x] Setup** > **TCP/IP**

Note: This menu is available only in network models or printers attached to print servers.

Menu item	Description
Activate On Off	Activates TCP/IP **Note:** On is the factory default setting.
Set Hostname	Lets you set the current TCP/IP hostname **Note:** This can be changed only from the Embedded Web Server.
IP Address	Lets you view or change the current TCP/IP address **Note:** Manually setting the IP address sets the Enable DHCP and Enable Auto IP settings to Off. It also sets Enable BOOTP and Enable RARP to Off on systems that support BOOTP and RARP.
Netmask	Lets you view or change the current TCP/IP netmask
Gateway	Lets you view or change the current TCP/IP gateway
Enable DHCP On Off	Specifies the DHCP address and parameter assignment setting **Note:** On is the factory default setting.
Enable RARP On Off	Specifies the RARP address assignment setting **Note:** On is the factory default setting.
Enable BOOTP On Off	Specifies the BOOTP address assignment setting **Note:** On is the factory default setting.

Menu item	Description
Enable AutoIP Yes No	Specifies the Zero Configuration Networking setting **Note:** Yes is the factory default setting.
Enable FTP/TFTP Yes No	Enables the built-in FTP server, which allows you to send files to the printer using File Transfer Protocol. **Note:** Yes is the factory default setting.
Enable HTTP Server Yes No	Enables the built-in web server (Embedded Web Server). When enabled, the printer can be monitored and managed remotely using a web browser. **Note:** Yes is the factory default setting.
WINS Server Address	Lets you view or change the current WINS server address
Enable DDNS Yes No	Lets you view or change the current DDNS setting **Note:** Yes is the factory default setting.
Enable mDNS Yes No	Lets you view or change the current mDNS setting **Note:** Yes is the factory default setting.
DNS Server Address	Lets you view or change the current DNS server address
Enable HTTPS Yes No	Lets you view or change the current HTTPS setting **Note:** Yes is the factory default setting.

IPv6 menu

Note: This menu is available only in network models or in printers attached to print servers.

This menu is available from the Network/Ports menu:

Network/Ports > **Standard Network** or **Network [x]** > **Standard Network Setup** or **Network [x] Setup** > **IPv6**

Menu item	Description
Enable IPv6 On Off	Enables IPv6 in the printer **Note:** On is the factory default setting.
Auto Configuration On Off	Specifies whether the network adapter accepts the automatic IPv6 address configuration entries provided by a router **Note:** On is the factory default setting.
Set Hostname	Lets you set the printer host name
View Address	Shows the printer IPv6 address **Note:** The IPv6 address can be changed only from the Embedded Web Server.

Menu item	Description
View Router Address	Shows the router address **Note:** The router address can be changed only from the Embedded Web Server.
Enable DHCPv6 On Off	Enables DHCPv6 in the printer **Note:** On is the factory default setting.

Wireless menu

Use the following menu items to view or configure the wireless internal print server settings.

Note: This menu is available only for models connected to a wireless network.

The Wireless menu is available from the Network/Ports menu:

Network/Ports > **Standard Network** or **Network [x]** > **Standard Network Setup** or **Network [x] Setup** > **Wireless**

Menu item	Description
WPS PBC Mode	Lets you connect the printer to a wireless network by pressing buttons on both the printer and the access point (wireless router) within a given period of time
WPS PIN Mode	Lets you connect the printer to a wireless network by using a PIN on the printer and entering it into the wireless settings of the access point
WPS Auto Detect Disable Enable	Automatically detects the connection method that an access point with WPS uses— WPS Push Button Configuration (PBC) or WPS Personal Identification Number (PIN) **Note:** Disable is the factory default setting.
Network Mode Ad hoc Infrastructure	Specifies the network mode **Notes:** • Ad hoc is the factory default setting. This configures wireless connection directly between the printer and a computer. • Infrastructure lets the printer access a network using an access point.
Compatibility 802.11b/g/n 802.11n 802.11b/g	Specifies the wireless standard for the wireless network **Note:** The 802.11b/g/n is the factory default setting.
Choose Network [list of available networks]	Lets you select an available network for the printer to use
View Signal Quality	Lets you view the quality of the wireless connection
View Security Mode	Lets you view the encryption method that a wireless network uses

Note: *Wi-Fi Protected Setup (WPS)* is a simple and secure configuration that allows you to establish a wireless network and enable network security without requiring prior knowledge of Wi-Fi technology. It is no longer necessary to configure the network name (SSID) and WEP key or WPA passphrase for network devices.

AppleTalk menu

This menu is available from the Network/Ports menu:

Network/Ports > **Standard Network** or **Network [x]** > **Standard Network Setup** or **Network [x] Setup** > **AppleTalk**

Menu item	Description
Activate Yes No	Activates AppleTalk support **Note:** Yes is the factory default setting.
View Name	Shows the assigned AppleTalk name **Note:** The name can be changed only from the Embedded Web Server.
View Address	Shows the assigned AppleTalk address **Note:** The address can be changed only from the Embedded Web Server.
Set Zone [default] [list of zones available on the network]	Provides a list of AppleTalk zones available on the network **Note:** When "default" is selected, the printer uses the AppleTalk zone that the router identifies as the default zone for the network. If no default zone exists, then the zone marked with an * is the default setting.

Standard USB menu

Menu item	Description
PCL SmartSwitch On Off	Sets the printer to automatically switch to PCL emulation when a print job received through a USB port requires it, regardless of the default printer language **Notes:** • On is the factory default setting. • When set to Off, the printer does not examine incoming data. The printer uses PostScript emulation if the PS SmartSwitch is set to On. It uses the default printer language specified in the Setup menu if the PS SmartSwitch is set to Off.
PS SmartSwitch On Off	Sets the printer to automatically switch to PS emulation when a print job received through a USB port requires it, regardless of the default printer language **Notes:** • On is the factory default setting. • When set to Off, the printer does not examine incoming data. The printer uses PCL emulation if the PCL SmartSwitch is set to On. It uses the default printer language specified in the Setup menu if the PCL SmartSwitch is set to Off.
NPA Mode Auto On Off	Sets the printer to perform the special processing required for bidirectional communication following the conventions defined by the NPA protocol **Notes:** • Auto is the factory default setting. Auto sets the printer to examine data, determine the format, and then process it appropriately. • Changing this setting from the printer control panel and then exiting the menus causes the printer to restart. The menu selection is then updated.

Menu item	Description
USB Buffer Auto 3KB to [maximum size allowed] Disabled	Sets the size of the USB input buffer **Notes:** • Auto is the factory default setting. • Disabled turns off job buffering. Any jobs already buffered on the printer hard disk are printed before normal processing resumes. • The USB buffer size value can be changed in 1-KB increments. • The maximum size allowed depends on the amount of memory in the printer, the size of the other link buffers, and whether Resource Save is set to On or Off. • To increase the maximum size range for the USB Buffer, disable or reduce the size of the parallel, serial, and network buffers. • Changing this setting from the printer control panel and then exiting the menus causes the printer to restart. The menu selection is then updated.
Job Buffering Off On Auto	Temporarily stores print jobs on the printer hard disk before printing **Notes:** • Off is the factory default setting. • On buffers jobs on the printer hard disk. • Auto buffers print jobs only if the printer is busy processing data from another input port. • Changing this setting from the printer control panel and then exiting the menus causes the printer to restart. The menu selection is then updated.
Mac Binary PS Auto On Off	Sets the printer to process Macintosh binary PostScript print jobs **Notes:** • Auto is the factory default setting. • On processes raw binary PostScript print jobs. • Off filters print jobs using the standard protocol.
ENA Address yyy.yyy.yyy.yyy	Sets the network address information for an external print server **Note:** This menu item is available only if the printer is attached to an external print server through the USB port.
ENA Netmask yyy.yyy.yyy.yyy	Sets the netmask information for an external print server **Note:** This menu item is available only if the printer is attached to an external print server through the USB port.
ENA Gateway yyy.yyy.yyy.yyy	Sets the gateway information for an external print server **Note:** This menu item is available only if the printer is attached to an external print server through the USB port.

Parallel [x] menu

Menu item	Description
PCL SmartSwitch On Off	Sets the printer to automatically switch to PCL emulation when a print job received through a serial port requires it, regardless of the default printer language **Notes:** • On is the factory default setting. • When set to Off, the printer does not examine incoming data. The printer uses PostScript emulation if PS SmartSwitch is set to On. It uses the default printer language specified in the Setup menu if PS SmartSwitch is set to Off.
PS SmartSwitch On Off	Sets the printer to automatically switch to PS emulation when a print job received through a serial port requires it, regardless of the default printer language **Notes:** • On is the factory default setting. • When set to Off, the printer does not examine incoming data. The printer uses PCL emulation if PCL SmartSwitch is set to On. It uses the default printer language specified in the Setup menu if PCL SmartSwitch is set to Off.
NPA Mode Auto On Off	Sets the printer to perform the special processing required for bidirectional communication following the conventions defined by the NPA protocol **Notes:** • Auto is the factory default setting. • Changing this setting from the printer control panel and then exiting the menus causes the printer to restart. The menu selection is then updated.
Parallel Buffer Auto 3KB to [maximum size allowed] Disabled	Sets the size of the parallel input buffer **Notes:** • Auto is the factory default setting. • Disabled turns off job buffering. Any print jobs already buffered on the printer hard disk are printed before normal processing resumes. • The parallel buffer size setting can be changed in 1-KB increments. • The maximum size allowed depends on the amount of memory in the printer, the size of the other link buffers, and whether Resource Save is set to On or Off. • To increase the maximum size range for the Parallel Buffer, disable or reduce the size of the USB, serial, and network buffers. • Changing this setting from the printer control panel and then exiting the menus causes the printer to restart. The menu selection is then updated.
Job Buffering Off On Auto	Temporarily stores print jobs on the printer hard disk before printing **Notes:** • Off is the factory default setting. • On buffers print jobs on the printer hard disk. • Auto buffers print jobs only if the printer is busy processing data from another input port. • Changing this setting from the printer control panel and then exiting the menus causes the printer to restart. The menu selection is then updated.

Menu item	Description
Advanced Status On Off	Enables bidirectional communication through the parallel port **Notes:** • On is the factory default setting. • Off disables parallel port negotiation.
Protocol Fastbytes Standard	Specifies the parallel port protocol **Notes:** • Fastbytes is the factory default setting. It provides compatibility with most existing parallel ports and is the recommended setting. • Standard tries to resolve parallel port communication problems.
Honor Init Off On	Determines if the printer honors printer hardware initialization requests from the computer **Notes:** • Off is the factory default setting. • The computer requests initialization by activating the Init signal from the parallel port. Many personal computers activate the Init signal each time the computer is turned on.
Parallel Mode 2 On Off	Determines if the parallel port data is sampled on the leading or trailing edge of a strobe **Note:** On is the factory default setting.
Mac Binary PS Auto On Off	Sets the printer to process Macintosh binary PostScript print jobs **Notes:** • Auto is the factory default setting. • Off filters print jobs using the standard protocol. • On processes raw binary PostScript print jobs.
ENA Address yyy.yyy.yyy.yyy	Sets the network address information for an external print server **Note:** This menu item is available only if the printer is attached to an external print server through the USB port.
ENA Netmask yyy.yyy.yyy.yyy	Sets the netmask information for an external print server **Note:** This menu item is available only if the printer is attached to an external print server through the USB port.
ENA gateway yyy.yyy.yyy.yyy	Sets the gateway information for an external print server **Note:** This menu item is available only if the printer is attached to an external print server through the USB port.

Serial [x] menu

Menu item	Description
PCL SmartSwitch On Off	Sets the printer to automatically switch to PCL emulation when a print job received through a serial port requires it, regardless of the default printer language **Notes:** • On is the factory default setting. • When set to Off, the printer does not examine incoming data. The printer uses PostScript emulation if PS SmartSwitch is set to On. It uses the default printer language specified in the Setup menu if PS SmartSwitch is set to Off.
PS SmartSwitch On Off	Sets the printer to automatically switch to PS emulation when a print job received through a serial port requires it, regardless of the default printer language **Notes:** • On is the factory default setting. • When set to Off, the printer does not examine incoming data. The printer uses PCL emulation if PCL SmartSwitch is set to On. It uses the default printer language specified in the Setup menu if PCL SmartSwitch is set to Off.
NPA Mode Auto On Off	Sets the printer to perform the special processing required for bidirectional communication following the conventions defined by the NPA protocol **Notes:** • Auto is the factory default setting. Auto sets the printer to examine data, determine the format, and then processes it appropriately. • When set to On, the printer performs NPA processing. If the data is not in NPA format, it is rejected as bad data. • When set to Off, the printer does not perform NPA processing. • Changing this setting from the printer control panel and then exiting the menus causes the printer to restart. The menu selection is then updated.
Serial Buffer Auto 3KB to [maximum size allowed] Disabled	Sets the size of the serial input buffer **Notes:** • Auto is the factory default setting. • Disabled turns off job buffering. Any jobs already buffered on the disk are printed before normal processing is resumed. • The serial buffer size setting can be changed in 1-KB increments. • The maximum size allowed depends on the amount of memory in the printer, the size of the other link buffers, and whether Resource Save is set to On or Off. • To increase the maximum size range for the Serial Buffer, disable or reduce the size of the parallel, serial, and network buffers. • Changing this setting from the printer control panel and then exiting the menus causes the printer to restart. The menu selection is then updated.

Menu item	Description
Job Buffering Off On Auto	Temporarily stores print jobs on the printer hard disk before printing **Notes:** • Off is the factory default setting. The printer does not buffer print jobs on the printer hard disk. • On buffers print jobs on the printer hard disk. • Auto buffers print jobs only if the printer is busy processing data from another input port. • Changing this setting from the printer control panel and then exiting the menus causes the printer to restart. The menu selection is then updated.
Protocol DTR DTR/DSR XON/XOFF XON/XOFF/DTR XONXOFF/DTRDSR	Selects the hardware and software handshaking settings for the serial port **Notes:** • DTR is the factory default setting. • DTR/DSR is a hardware handshaking setting. • XON/XOFF is a software handshaking setting. • XON/XOFF/DTR and XON/XOFF/DTR/DSR are combined hardware and software handshaking settings.
Robust XON Off On	Determines whether the printer communicates availability to the computer **Notes:** • Off is the factory default setting. • This menu item applies only to the serial port if Serial Protocol is set to XON/XOFF.
Baud 9600 19200 38400 57600 115200 138200 172800 230400 345600 1200 2400 4800	Specifies the rate at which data can be received through the serial port **Notes:** • 9600 is the factory default setting. • 138200, 172800, 230400, and 345600 baud rates are only displayed in the Standard Serial menu. These settings do not appear in the Serial Option 1, Serial Option 2, or Serial Option 3 menus.
Data Bits 8 7	Specifies the number of data bits sent in each transmission frame **Note:** 8 is the factory default setting.
Parity None Ignore Even Odd	Sets the parity for serial input and output data frames **Note:** None is the factory default setting.

Menu item	Description
Honor DSR Off On	Determines whether the printer uses the DSR Signal **Notes:** • Off is the factory default setting. • DSR is a handshaking signal used by most serial cables. The serial port uses DSR to distinguish data sent by the computer from data created by electrical noise in the serial cable. The electrical noise can cause stray characters to print. Set this to On to prevent stray characters from printing.

SMTP Setup menu

Menu item	Description
Primary SMTP Gateway	Specifies SMTP server gateway and port information **Note:** 25 is the default SMTP gateway port.
Primary SMTP Gateway Port	
Secondary SMTP Gateway	
Secondary SMTP Gateway Port	
SMTP Timeout 5–30	Specifies the amount of time in seconds before the server stops trying to send an e-mail **Note:** 30 seconds is the factory default setting.
Reply Address	Specifies a reply address of up to 128 characters in the e-mail sent by the printer
Use SSL Disabled Negotiate Required	Sets the printer to use SSL for increased security when connecting to the SMTP server **Notes:** • Disabled is the factory default setting. • When the Negotiate setting is used, the SMTP server determines if SSL will be used.
SMTP Server Authentication No authentication required Login/Plain CRAM-MD5 Digest-MD5 NTLM Kerberos 5	Specifies the type of user authentication required for scan to e-mail privileges **Note:** “No authentication required” is the factory default setting.

Menu item	Description
Device-Initiated E-mail None Use Device SMTP Credentials	Specifies what credentials will be used when communicating to the SMTP server. Some SMTP servers require credentials to send an e-mail. **Notes:** • None is the factory default setting for Device and User-Initiated E-mail. • Device Userid and Device Password are used to log in to the SMTP server when Use Device SMTP Credentials is selected.
User-Initiated E-mail None Use Device SMTP Credentials Use Session User ID & Password Use Session E-mail address & Password Prompt User	
Device Userid	
Device Password	
Kerberos 5 Realm	
NTLM Domain	

Security menu

Miscellaneous Security Settings menu

Menu item	Description
Login Restriction Login failures 1–10 Failure time frame 1–60 Lockout time 1–60 Panel Login Timeout 1–900 Remote Login Timeout 1–120	Limits the number and time frames of failed login attempts from the printer control panel before *all* users are locked out **Notes:** • "Login failures" specifies the number of failed login attempts before users are locked out. 3 attempts is the factory default setting. • "Failure time frame" specifies the time frame during which failed login attempts can be made before users are locked out. 5 minutes is the factory default setting. • "Lockout time" specifies how long users are locked out after exceeding the login failures limit. 5 minutes is the factory default setting. • Panel Login Timeout specifies how long the printer remains idle on the home screen before automatically logging the user off. 30 seconds is the factory default setting. • Remote Login Timeout specifies how long a remote interface (for example, a Web page) can remain idle before automatically logging the user off. 10 minutes is the factory default setting.

Confidential Print menu

Menu item	Description
Max Invalid PIN Off 2–10	Limits the number of times an invalid PIN can be entered **Notes:** • Off is the default setting. • This menu item appears only if a printer hard disk is installed. • Once a limit is reached, the jobs for that user name and that PIN are deleted.
Job Expiration Off 1 hour 4 hours 24 hours 1 week	Limits the amount of time a confidential job stays in the printer before it is deleted **Notes:** • Off is the default setting. • If the Job Expiration setting is changed while confidential jobs reside on the printer RAM or printer hard disk, the expiration time for those print jobs does not change to the new default value. • If the printer is turned off, all confidential jobs held in printer RAM are deleted.

Disk Wiping menu

Disk Wiping erases *only* print job data on the printer hard disk that *are not* currently in use by the file system. All permanent data on the printer hard disk are preserved, such as downloaded fonts, macros, and held jobs.

Note: This menu appears only if a formatted, non-defective printer hard disk is installed.

Menu item	Description
Wiping Mode Auto Manual Off	Disk Wiping erases *only* print job data that *is not* currently in use by the file system from the printer hard disk. All permanent data on the printer hard disk is preserved, such as downloaded fonts, macros, and held jobs. **Notes:** • Auto is the factory default setting. • Due to the large amount of resources required for Automatic Wiping, activating this option may decrease printer performance, especially if the printer requires hard disk space faster than it can be wiped and returned to service.
Manual Wiping Do not start now Start now	Manual Wiping overwrites all disk space that has been used to hold data from a print job that has been processed (printed). This type of wipe *does not* erase any information related to an unprocessed print job. **Notes:** • "Do not start now" is the factory default setting. • If the Disk Wiping access control is activated, then a user must successfully authenticate and have the required authorization in order to initiate the disk wipe.

Menu item	Description
Automatic Method Single pass Multiple pass	Automatic wiping marks all disk space used by a previous print job and does not permit the file system to reuse this space until it has been cleared. Only Automatic wiping enables users to activate disk wiping without having to turn the printer off for an extended amount of time. **Notes:** • "Single pass" is the factory default setting. • Highly confidential information should be wiped using *only* the Multiple pass method.
Manual Method Single pass Multiple pass	Both manual and scheduled wiping allow the file system to reuse marked disk space without having to wipe it first. **Notes:** • "Single pass" is the factory default setting. • Highly confidential information should be wiped using *only* the Multiple pass method.
Scheduled Method Single pass Multiple pass	Both manual and scheduled wiping allow the file system to reuse marked disk space without having to wipe it first. **Notes:** • "Single pass" is the factory default setting. • Highly confidential information should be wiped using *only* the Multiple Pass method . • Scheduled wipes are initiated *without* displaying a user warning or confirmation message.

Security Audit Log menu

Menu item	Description
Export Log	Enables an authorized user to export the audit log **Notes:** • To export the audit log from the printer control panel, a flash drive must be attached to the printer. • From the Embedded Web Server, the audit log can be downloaded to a computer.
Delete Log Yes No	Specifies whether audit logs are deleted **Note:** "Yes" is the factory default setting.

Menu item	Description
Configure Log Enable Audit No Yes Enable Remote Syslog No Yes Remote Syslog Facility 0–23 Severity of events to log 0–7	Specifies whether and how audit logs are created **Notes:** • Enable Audit determines if events are recorded in the secure audit log and remote syslog. No is the factory default setting. • Enable Remote Syslog determines if logs are sent to a remote server. No is the factory default setting. • Remote Syslog Facility determines the value used to send logs to the remote syslog server. 4 is the factory default setting. • With the security audit log activated, the severity value of each event is recorded. 4 is the factory default setting.

Set Date and Time menu

Menu item	Description
Current Date and Time	Shows the current date and time settings for the printer
Manually Set Date and Time [input date/time]	**Notes:** • Date and Time is set in YYYY-MM-DD HH:MM format. • Manually setting the date and time sets Enable NTP to Off.
Time Zone [list of time zones]	**Note:** GMT is the factory default setting.
Automatically observe DST On Off	**Note:** On is the factory default setting. This uses the applicable Daylight Saving Time associated with the Time Zone setting.
Enable NTP On Off	Enables Network Time Protocol, which synchronizes the clocks of devices on a network **Notes:** • On is the factory default setting. • The setting is turned off if you manually set the date and time.

Settings menu

General Settings menu

Menu item	Description
Display Language English Francais Deutsch Italiano Espanol Greek Dansk Norsk Nederlands Svenska Portuguese Suomi Russian Polski Magyar Turkce Cesky Simplified Chinese Traditional Chinese Korean Japanese	Sets the language of the text appearing on the display **Note:** Some languages may not be available for all printers.
Eco-Mode Off Energy Energy/Paper Paper	Minimizes the use of energy, paper, or specialty media **Notes:** • Off is the factory default setting. Off resets the printer to its factory default settings. • Energy minimizes the power used by the printer. Performance may be affected, but print quality is not. • Energy/Paper minimizes the use of power, and of paper and specialty media. • Paper minimizes the amount of paper and specialty media needed for a print job. Performance may be affected, but print quality is not.

Menu item	Description
Quiet Mode Off On	Reduces the amount of noise produced by the printer **Notes:** • Off is the factory default setting. This setting supports the performance specifications of your printer. • On configures the printer to produce as little noise as possible. This setting is best suited for printing text and line graphics. • For optimal printing of color-rich documents, set Quiet Mode to Off. • Selecting **Photo** from the printer driver may disable Quiet Mode and provide better print quality and full speed printing.
Run Initial setup Yes No	Instructs the printer to run the setup wizard **Notes:** • Yes is the factory default setting. • After completing the setup wizard by selecting Done at the country or region selection screen, the default becomes No.

Menu item	Description
Keyboard Keyboard Type English Francais Francais Canadien Deutsch Italiano Espanol Greek Dansk Norsk Nederlands Svenska Suomi Portuguese Russian Polski Swiss German Swiss French Korean Magyar Turkce Cesky Simplified Chinese Traditional Chinese Japanese Custom Key 1 Custom Key 2	Specifies a language for the printer control panel keyboard
Paper Sizes US Metric	Specifies the default paper measurements **Notes:** • Initial setting is determined by your country or region selection in the initial setup wizard. • Changing this setting also changes the Units of Measurement setting in the Universal Setup menu and the default for each input source in the Paper Size/Type menu.

Menu item	Description
Displayed Information Left side Right side Custom Text [x] [x] Toner Waste Toner Bottle Fuser Transfer Module When to display Do not display Display Message to Display Default Alternate Default [text entry] Alternate [text entry]	Specifies what is displayed on the upper left and right corners of the home screen For the Left side and Right side options, choose from the following options: None IP Address Hostname Contact Name Location Date/Time mDNS/DDNS Service Name Zero Configuration Name Custom Text [x] Model Name **Notes:** • IP Address is the factory default setting for “Left side.” • Date/Time is the factory default setting for “Right side.” • “Do not display” is the factory default setting for “When to display.” • Default is the factory default setting for Message to Display.
Displayed Information Paper Jam Load Paper Service Errors	The displayed information for Paper Jam, Load Paper, and Service Errors can be customized with the following options: Display No Yes Message to Display Default Alternate Default [text entry] Alternate [text entry] **Notes:** • No is the factory default setting for Display. • Default is the factory default setting for Message to Display.

Menu item	Description
Home screen customization Change Language Copy Search Held Jobs Held Jobs USB Drive Profiles Bookmarks Jobs by user	Additional buttons can be added to the home screen, and default buttons can be removed. Available selections for each button are: Do not display Display
Date Format MM-DD-YYYY DD-MM-YYYY YYYY-MM-DD	Specifies the format for the printer date
Time Format 12 hour A.M./P.M. 24 hour clock	Specifies the format for the printer time **Note:** 12 hour is the factory default setting.
Screen Brightness 20–100	Specifies the brightness of the printer control panel display **Note:** 100 is the factory default setting.
Output Lighting Normal/Standby Mode Dim Bright Off	Sets the amount of light from the optional exit bin **Notes:** • Dim is the factory default setting for Normal/Standby Mode if Eco-Mode is set to Energy or Energy/Paper. • Bright is the factory default setting for Normal/Standby Mode if Eco-Mode is set to Off or Paper.
Audio Feedback Button Feedback On Off Volume 1–10	**Notes:** • On is the factory default setting for Button Feedback. • 5 is the factory default setting for Volume.
Show Bookmarks Yes No	Specifies whether bookmarks are displayed from the Held Jobs area or not **Note:** Yes is the factory default setting.
Web Page Refresh Rate 30–300	Specifies the number of seconds between Embedded Web Server refreshes **Note:** 120 seconds is the factory default setting.
Contact Name	Specifies a contact name for the printer **Note:** The contact name will be stored on the Embedded Web Server.
Location	Specifies the location of the printer **Note:** The location will be stored on the Embedded Web Server.

Menu item	Description
Alarms Alarm Control Cartridge Alarm Staple Alarm Hole Punch Alarm	Sets an alarm to sound when the printer requires operator intervention Available selections for each alarm type are: Off Single Continuous **Notes:** • Single is the factory default setting for Alarm Control and Cartridge Alarm. Single sounds three quick beeps. • Off is the factory default setting for Staple Alarm and Hole Punch Alarm. Off means no alarm will sound. • Continuous repeats three beeps every 10 seconds.
Timeouts Standby Mode 1–240 Disabled	Specifies the number of minutes of inactivity before the system enters a lower power state **Note:** 15 minutes is the factory default setting.
Timeouts Sleep Mode 2–240 min Disabled	Sets the amount of time the printer waits, after a print job is finished, before it goes into a reduced power state **Notes:** • 30 minutes is the factory default setting. • Lower settings conserve more energy, but may require longer warm-up times. • Select the lowest setting if the printer shares an electrical circuit with room lighting. • Select a high setting if the printer is in constant use. Under most circumstances, this keeps the printer ready to print with minimum warm-up time.
Timeouts Screen Timeout 15–300 sec	Sets the amount of time in seconds the printer waits before returning the printer display to a **Ready** state **Note:** 30 seconds is the factory default setting.
Timeouts Print Timeout Disabled 1–255 sec	Sets the amount of time in seconds the printer waits to receive an end-of-job message before canceling the remainder of the print job **Notes:** • 90 seconds is the factory default setting. • When the timer expires, any partially printed page still in the printer is printed, and then the printer checks to see if any new print jobs are waiting. • Print Timeout is available only when using PCL emulation. This setting has no effect on PostScript emulation print jobs.

Menu item	Description
Timeouts Wait Timeout Disabled 15–65535 sec	Sets the amount of time in seconds the printer waits for additional data before canceling a print job **Notes:** • 40 seconds is the factory default setting. • Wait Timeout is available only when the printer is using PostScript emulation. This setting has no effect on PCL emulation print jobs.
Timeouts Job Hold Timeout 5–255 sec	Sets the amount of time the printer waits for user intervention before it holds jobs that require unavailable resources and continues to process print jobs in the print queue **Notes:** • 30 seconds is the factory default setting. • This menu item appears only when a printer hard disk is installed.
Print Recovery Auto Continue Disabled 5–255	Lets the printer automatically continue printing from certain offline situations when not resolved within the specified time period **Note:** Disabled is the factory default setting.
Print Recovery Jam Recovery Auto On Off	Specifies whether the printer reprints jammed pages **Notes:** • Auto is the factory default setting. The printer reprints jammed pages unless the memory required to hold the pages is needed for other printer tasks. • On sets the printer to always reprint jammed pages. • Off sets the printer to never reprint jammed pages.
Print Recovery Page Protect Off On	Lets the printer successfully print a page that may not have printed otherwise **Notes:** • Off is the factory default setting. Off prints a partial page when there is not enough memory to print the whole page. • On sets the printer to process the whole page so that the entire page prints.

Menu item	Description
Sleep Button Settings Press Sleep Button Sleep Hibernate Do Nothing Press and Hold Sleep Button Do Nothing Sleep Hibernate	Determines how the printer responds when pressing the Sleep button in Idle state **Notes:** • Sleep is the factory default setting for Press Sleep Button. • Do Nothing is the factory default setting for Press and Hold Sleep Button. • Sleep or Hibernate Mode sets the printer to operate at a lower power setting. • If the printer is in Sleep Mode, then the touch screen appears off and the Sleep button turns amber in color. Touch anywhere on the touch screen or press a button on the printer control panel to exit Sleep Mode. • If the printer is in Hibernate mode, then the touch screen is completely off and the Sleep button turns amber in color and is blinking. Press and hold the Sleep button for at least 2 seconds to exit Hibernate mode.
Factory Defaults Do Not Restore Restore Now	Returns the printer settings to the factory default settings **Notes:** • Do Not Restore is the factory default setting. Do Not Restore keeps the user-defined settings. • Restore Now returns all printer settings to the factory default settings except Network/Ports menu settings. All downloads stored in RAM are deleted. Downloads stored in flash memory or on a printer hard disk are not affected.

Flash Drive menu

Menu item	Description
Copies 1–999	Specifies a default number of copies for each print job **Note:** 1 is the factory default setting.
Paper Source Tray [x] MP Feeder Manual Paper Manuel Envelope	Sets a default paper source for all print jobs **Note:** Tray 1 (standard tray) is the factory default setting.
Color Color Black Only	Generates color outputs **Note:** Color is the factory default setting.
Collate On (1,2,1,2,1,2) Off (1,1,1,2,2,2)	Stacks the pages of a print job in sequence when printing multiple copies **Note:** On is the factory default setting.

Menu item	Description
Sides (Duplex) 1 sided 2 sided	Specifies whether prints are on one side or on both sides of the paper **Note:** 1 sided is the factory default setting.
Staple Off Auto Back Dual Dual Double Front	Specifies whether prints are stapled **Notes:** • Off is the factory default setting. • This menu appears only when a stapler is installed.
Hole Punch Off On	Specifies whether prints have punched holes **Notes:** • Off is the factory default setting. • This menu appears only when a puncher is installed.
Hole Punch Mode 2 holes 3 holes 4 holes	Determines the type of punch finishing performed on prints **Notes:** • “2 holes” is the factory default setting regardless of hardware. • “3 holes” and “4 holes” only appear when their respective hole punch hardware is installed. •
Duplex Binding Long Edge Short Edge	Defines the way duplex pages are bound and how the printing on the back of the page is oriented in relation to the printing on the front of the page **Notes:** • Long Edge is the factory default setting. Long edge assumes binding along the long edge of the page (left edge for portrait and top edge for landscape). • Short edge assumes binding along the short edge of the page (top edge for portrait and left edge for landscape).
Paper Saver Orientation Auto Landscape Portrait	Specifies the orientation of a multiple-page document **Note:** Auto is the factory default setting. The printer chooses between portrait and landscape.
Paper Saver Off 2-Up 3-Up 4-Up 6-Up 9-Up 12-Up 16-Up	Specifies that multiple-page images be printed on one side of a paper **Notes:** • Off is the factory default setting. • The number selected is the number of page images that will print per side.

Menu item	Description
Paper Saver Border None Solid	Prints a border on each page image when using Paper Saver **Note:** None is the factory default setting.
Paper Saver Ordering Horizontal Reverse Horizontal Reverse Vertical Vertical	Specifies the positioning of multiple-page images when using Paper Saver **Notes:** • Horizontal is the factory default setting. • Positioning depends on the number of page images and whether they are in portrait or landscape orientation.
Separator Sheets None Between Copies Between Jobs Between Pages	Specifies whether blank separator sheets are inserted **Notes:** • None is the factory default setting. • Between Copies inserts a blank sheet between each copy of a print job if Collate is set to On. If Collate is set to Off, then a blank page is inserted between each set of printed pages, such as after all page 1's and after all page 2's. • Between Jobs inserts a blank sheet between print jobs. • Between Pages inserts a blank sheet between each page of the print job. This setting is useful when printing transparencies or inserting blank pages in a document for notes.
Separator Sheet Source Tray [x] Manual Feeder	Specifies the paper source for separator sheets **Notes:** • Tray 1 (standard tray) is the factory default setting. • From the Paper menu, Configure MP must be set to Cassette in order for Manual Feeder to appear as a menu setting.
Blank Pages Do Not Print Print	Specifies whether blank pages are inserted in a print job **Note:** Do Not Print is the factory default setting.

Setup menu

Menu item	Description
Printer Language PS Emulation PCL Emulation	Sets the default printer language **Notes:** • PS Emulation is the factory default printer language. PS emulation uses a PS interpreter for processing print jobs. • PCL Emulation uses a PCL interpreter for processing print jobs. • Setting a printer language as the default does not prevent a software program from sending print jobs that use another printer language.

Menu item	Description
Job Waiting Off On	Specifies if print jobs are removed from the print queue when they require unavailable printer options or custom settings. These print jobs are stored in a separate print queue, so other jobs print normally. When the missing information and/or options are obtained, the stored jobs print. **Notes:** • Off is the factory default setting. • This menu item appears only if a non-read-only printer hard disk is installed. This requirement ensures that stored jobs are not deleted if the printer loses power.
Print Area Normal Whole Page	Sets the logical and physical printable area **Notes:** • Normal is the factory default setting. When attempting to print data in the non-printable area defined by the Normal setting, the printer clips the image at the boundary. • Whole Page allows images to be moved into the non-printable area defined by the Normal setting, but the printer clips the image at the Normal setting boundary. This setting affects only pages printed using a PCL 5e interpreter. This setting has no effect on pages printed using the PCL XL or PostScript interpreter.
Printer Usage Max Yield Max Speed	Sets the printer for a faster print speed or a higher toner yield. **Note:** Max Yield is the factory default setting.
Black Only Mode Off On	Sets the printer to print text and graphics using only the black toner cartridge **Note:** Off is the factory default setting.
Download Target RAM Flash Disk	Sets the storage location for downloads **Notes:** • RAM is the factory default setting. Downloads stored in RAM are temporary. • Storing downloads in flash memory or on a printer hard disk places them in permanent storage. Downloads remain in flash memory or on the printer hard disk even when the printer is turned off. • This menu item appears only if a flash and/or disk option is installed.

Menu item	Description
Resource Save Off On	Specifies how the printer handles temporary downloads, such as fonts and macros stored in the RAM, when the printer receives a print job that requires more memory than is available **Notes:** • Off is the factory default setting. Off sets the printer to retain downloads only until memory is needed. Downloads are deleted in order to process print jobs. • On sets the printer to retain downloads during language changes and printer resets. If the printer runs out of memory, **38 Memory Full** appears, but downloads are not deleted.
Print All Order Alphabetical Oldest First Newest First	Specifies the order in which held and confidential jobs are printed when Print All is selected **Notes:** • Alphabetical is the factory default setting. • Print jobs always appear in alphabetical order on the printer control panel.

Job Accounting menu

Note: This menu item appears only if a formatted, non-defective printer hard disk is installed. The printer hard disk cannot be read/write- or write-protected.

Menu item	Description
Job Accounting Log Off On	Determines if the printer creates a log of the print jobs it receives **Note:** Off is the factory default setting.
Job Accounting Utilities	Lets you print and delete log files or export them to a flash drive
Accounting Log Frequency Monthly Weekly	Determines how often a log file is created **Note:** Monthly is the factory default setting.
Log Action at End of Frequency None E-mail Current Log E-mail & Delete Current Log Post Current Log Post & Delete Current Log	Determines how the printer responds when the frequency threshold expires **Note:** None is the factory default setting.
Disk Near Full Level 1–99 Off	Specifies the maximum size of the log file before the printer executes the Disk Near Full Action **Note:** 5MB is the factory default setting.

Menu item	Description
Disk Near Full Action None E-mail Current Log E-mail & Delete Current Log E-mail & Delete Oldest Log Post Current Log Post & Delete Current Log Post & Delete Oldest Log Delete Current Log Delete Oldest Log Delete All Logs Delete All But Current	Determines how the printer responds when the printer hard disk is nearly full **Notes:** • None is the factory default setting. • The value defined in Disk Near Full Level determines when this action is triggered.
Disk Full Action None E-mail & Delete Current Log E-mail & Delete Oldest Log Post & Delete Current Log Post & Delete Oldest Log Delete Current Log Delete Oldest Log Delete All Logs Delete All But Current	Determines how the printer responds when disk usage reaches the maximum limit (100MB) **Note:** None is the factory default setting.
URL to Post Logs	Determines where the printer posts job accounting logs
E-mail Address to Send Logs	Specifies the e-mail address to which the device sends job accounting logs
Log File Prefix	**Note:** The current host name defined in the TCP/IP menu is used as the default log file prefix.

Finishing menu

Menu item	Description
Sides (Duplex) 1 sided 2 sided	Specifies whether duplex (2-sided) printing is set as the default setting for all print jobs **Notes:** • 1 sided is the factory default setting. • You can set 2-sided printing from the software program. For Windows users, click **File** > **Print**, and then click **Properties**, **Preferences**, **Options**, or **Setup**. For Macintosh users, choose **File** > **Print**, and then adjust the settings from the print dialog and pop-up menus.

Menu item	Description
Duplex Binding Long Edge Short Edge	Defines the way duplexed pages are bound and how the printing on the back of the page is oriented in relation to the printing on the front of the page **Notes:** • Long Edge is the factory default setting. Long edge assumes binding along the long edge of the page (left edge for portrait and top edge for landscape). • Short edge assumes binding along the short edge of the page (top edge for portrait and left edge for landscape).
Copies 1–999	Specifies the default number of copies for each print job **Note:** 1 is the factory default setting.
Blank Pages Do Not Print Print	Specifies whether blank pages are inserted in a print job **Note:** Do Not Print is the factory default setting.
Collate Off (1,1,1,2,2,2) On (1,2,1,2,1,2)	Stacks the pages of a print job in sequence when printing multiple copies **Notes:** • Off is the factory default setting. • On stacks the print job in sequence.
Separator Sheets Off Between Copies Between Jobs Between Pages	Specifies whether blank separator sheets are inserted **Notes:** • Off is the factory default setting. • Between Copies inserts a blank sheet between each copy of a print job if Collate is set to On. If Collate is set to Off, then a blank page is inserted between each set of printed pages, such as after all page 1's and after all page 2's. • Between Jobs inserts a blank sheet between print jobs. • Between Pages inserts a blank sheet between each page of a print job. This setting is useful when printing transparencies or when inserting blank pages in a document.
Separator Source Tray [x] Manual Feeder	Specifies the paper source for separator sheets **Notes:** • Tray 1 (standard tray) is the factory default setting. • From the Paper menu, Configure MP must be set to Cassette for Manual Feeder to appear as a menu setting.
Paper Saver Off 2-Up 3-Up 4-Up 6-Up 9-Up 12-Up 16-Up	Specifies that multiple-page images be printed on one side of a paper **Notes:** • Off is the factory default setting. • The number selected is the number of page images that will print per side.

Menu item	Description
Paper Saver Ordering Horizontal Reverse Horizontal Reverse Vertical Vertical	Specifies the positioning of multiple-page images when using Paper Saver **Notes:** • Horizontal is the factory default setting. • Positioning depends on the number of page images and whether they are in portrait or landscape orientation.
Paper Saver Orientation Auto Landscape Portrait	Specifies the orientation of a multiple-page document **Note:** Auto is the factory default setting. The printer chooses between portrait and landscape.
Paper Saver Border None Solid	Prints a border on each page image when using Paper Saver **Note:** None is the factory default setting.
Staple Job Off Auto Back Dual Dual Double Front	Specifies whether the prints are stapled **Notes:** • Off is the factory default setting. • This menu only appears when the printer is equipped with a stapler.
Hole Punch Off On	Specifies whether the prints have punched holes **Note:** This menu only appears when the printer is equipped with a puncher.
Hole Punch Mode 2 holes 3 holes 4 holes	Determines the type of punch finishing performed on a printed output **Notes:** • “2 holes” is the factory default setting regardless of hardware. • “3 holes” and “4 holes” only appear when their respective hole punch hardware is installed.
Offset Pages None Between Copies Between Jobs	Offsets pages at certain instances **Notes:** • None is the factory default setting. • Between Copies offsets each copy of a print job if Collate is set to On. If Collate is set to Off, each set of printed pages are offset, such as all page 1's and all page 2's. • Between Jobs sets the same offset position for the entire print job regardless of the number of copies printed. • This menu only appears when a stapler finisher is installed.

Quality menu

Menu item	Description
Print Mode Color Black Only	Specifies whether images are printed in color or in black and white **Notes:** • Color is the factory default setting. • The printer driver is capable of overriding this setting.
Color Correction Auto Off Manual	Adjusts the color output on the printed page **Notes:** • Auto is the factory default setting. Auto applies different color conversion tables to each object on the printed page. • Manual allows customization of color tables using the settings available from the Manual Color menu. • Due to the differences in additive and subtractive colors, certain colors that appear on computer screens are impossible to duplicate on a printed page.
Print Resolution 2400 Image Q 1200 dpi	Specifies the printed output resolution **Notes:** • 2400 Image Q is the factory default setting. • 1200 dpi provides the highest resolution output, and increases gloss.
Toner Darkness 1–5	Lightens or darkens the printed output **Notes:** • 4 is the factory default setting. • Selecting a smaller number can help conserve toner. • If Print Mode is set to Black Only, then a setting of 5 increases toner density and darkness for all print jobs. • If Print Mode is set to Color, then a setting of 5 is the same as a setting of 4.
Enhance Fine Lines Off On	Enables a print mode preferable for files such as architectural drawings, maps, electrical circuit diagrams, and flow charts **Notes:** • Off is the factory default setting. • You can set this option from the software program. For Windows users, click **File** > **Print**, and then click **Properties**, **Preferences**, **Options**, or **Setup**. For Macintosh users, choose **File** > **Print**, and then adjust the settings from the print dialog and pop-up menus. • To set this option using the Embedded Web Server, type the network printer IP address or host name in a browser window.
Color Saver Off On	Reduces the amount of toner used for graphics and images. The amount of toner used for text is not reduced. **Notes:** • Off is the factory default setting. • On overrides Toner Darkness settings.

Menu item	Description
RGB Brightness -6 to 6	Adjusts brightness in color outputs **Notes:** • 0 is the factory default setting. • This does not affect files where CMYK color specifications are used.
RGB Contrast 0–5	Adjusts contrast in color outputs **Notes:** • 0 is the factory default setting. • This does not affect files where CMYK color specifications are used.
RGB Saturation 0–5	Adjusts saturation in color outputs **Notes:** • 0 is the factory default setting. • This does not affect files where CMYK color specifications are used.
Color Balance Cyan -5 to 5 Magenta -5 to 5 Yellow -5 to 5 Black -5 to 5 Reset Defaults	Adjusts color in printed output by increasing or decreasing the amount of toner used for each color **Note:** 0 is the factory default setting.
Color Samples sRGB Display sRGB Vivid Display—True Black Vivid Off—RGB US CMYK Euro CMYK Vivid CMYK Off—CMYK	Prints sample pages for each of the RGB and CMYK color conversion tables used in the printer **Notes:** • Selecting any setting prints the sample. • Color samples consist of a series of colored boxes along with the RGB or CMYK combination that creates the color observed. These pages can be used to help decide which combinations to use to get the desired printed output. • From a browser window, type the IP address of the printer to access a complete list of color sample pages from the Embedded Web Server.

Menu item	Description
Manual Color RGB Image Vivid sRGB Display Display—True Black sRGB Vivid Off RGB Text Vivid sRGB Display Display—True Black sRGB Vivid Off RGB Graphics Vivid sRGB Display Display—True Black sRGB Vivid Off	Customizes the RGB color conversions **Notes:** • sRGB Display is the factory default setting for RGB Image. This applies a color conversion table to an output that matches the colors displayed on a computer monitor. • sRGB Vivid is the factory default setting for RGB Text and RGB Graphics. sRGB Vivid applies a color table that increases saturation. This is preferred for business graphics and text. • Vivid applies a color conversion table that produces brighter, more saturated colors. • Display—True Black applies a color conversion table that uses only black toner for neutral gray colors.
Manual Color CMYK Image US CMYK Euro CMYK Vivid CMYK Off CMYK Text US CMYK Euro CMYK Vivid CMYK Off CMYK Graphics US CMYK Euro CMYK Vivid CMYK Off	Customizes the CMYK color conversions **Notes:** • US CMYK is the US factory default setting. US CMYK applies a color conversion table that tries to produce output that matches SWOP color output. • Euro CMYK is the international factory default setting. Euro CMYK applies a color conversion table that tries to produce output that matches EuroScale color output. • Vivid CMYK increases color saturation for the US CMYK color conversion table.
Spot Color Replacement	Allows users to create and save custom spot colors with corresponding CMYK values

Utilities menu

Menu item	Description
Remove Held Jobs Confidential Held Not Restored All	Removes confidential and held jobs from the printer hard disk **Notes:** • Selecting a setting affects only print jobs that are resident in the printer. Bookmarks, print jobs on flash drives, and other types of held jobs are not affected. • Not Restored removes all Print and Hold jobs that are *not* restored from the printer hard disk or memory.
Format Flash Yes No	Formats the flash memory **Warning—Potential Damage:** Do not turn off the printer while the flash memory is being formatted. **Notes:** • Yes deletes all data stored in flash memory. • No cancels the format request. • Flash memory refers to the memory added by installing a flash memory option card in the printer. • A flash memory option card must be installed in the printer and operating properly for this menu item to be available. • The flash memory option card must not be read/write- or write-protected.
Delete Downloads on Disk Delete Now Do Not Delete	Removes downloads from the printer hard disk, including all held jobs, buffered jobs, and parked jobs **Notes:** • Delete Now configures the printer control panel to return to the originating screen after the deletion process is completed. • Do Not Delete sets the printer control panel to return to the main Utilities menu.
Activate Hex Trace	Assists in isolating the source of a print job problem **Notes:** • When activated, all data sent to the printer is printed in hexadecimal and character representation, and control codes are not executed. • To exit or deactivate Hex Trace, turn the printer off or reset the printer.
Coverage Estimator Off On	Provides an estimate of the percentage coverage of toner on a page. The estimate is printed on a separate page at the end of each print job. **Note:** Off is the factory default setting.

XPS menu

Menu item	Description
Print Error Pages Off On	Prints a page containing information on errors, including XML markup errors **Note:** Off is the factory default setting.

PDF menu

Menu item	Description
Scale to Fit No Yes	Scales page content to fit the selected paper size **Note:** No is the factory default setting.
Annotations Do Not Print Print	Prints annotations in a PDF **Note:** Do Not Print is the factory default setting.

PostScript menu

Menu item	Description
Print PS Error Off On	Prints a page containing the PostScript error **Note:** Off is the factory default setting.
Lock PS Startup Mode Off On	Enables users to disable the SysStart file **Note:** Off is the factory default setting.
Font Priority Resident Flash/Disk	Establishes the font search order **Notes:** • Resident is the factory default setting. • This menu item is available only if a formatted flash memory option card or printer hard disk is installed and operating properly. • Make sure the flash memory option or printer hard disk is not read/write-, write-, or password-protected. • Job Buffer Size must not be set to 100%.
Image Smoothing Off On	Enhances the contrast and sharpness of low-resolution images and smooths their color transitions **Notes:** • Off is the factory default setting. • Image Smoothing has no effect on images that are 300 dpi or higher in resolution.

PCL Emul menu

Menu item	Description
Font Source Resident Disk Download Flash All	Specifies the set of fonts used by the Font Name menu item **Notes:** • Resident is the factory default setting. It shows the factory default set of fonts downloaded in RAM. • Flash and Disk settings show all fonts resident in that option. Make sure the flash option is properly formatted and is not read/write-, or password-protected. • Download shows all the fonts downloaded in RAM. • All shows all fonts available to any option.
Font Name RO Courier	Identifies a specific font and where it is stored **Note:** RO Courier is the factory default setting. The RO Courier format shows the font name, font ID, and storage location in the printer. The font source abbreviation is R for Resident, F for Flash, K for Disk, and D for Download.
Symbol Set 10U PC-8 12U PC-850	Specifies the symbol set for each font name **Notes:** • 10U PC-8 is the US factory default setting. 12U PC-850 is the international factory default setting. • A symbol set is a set of alphabetical and numeric characters, punctuation, and special symbols. Symbol sets support the different languages or specific programs such as math symbols for scientific text. Only the supported symbol sets are shown.
PCL Emulation Settings Point Size 1.00–1008.00	Changes the point size for scalable typographic fonts **Notes:** • 12 is the factory default setting. • Point Size refers to the height of the characters in the font. One point equals approximately 1/72 of an inch. • Point sizes can be increased or decreased in 0.25-point increments.
PCL Emulation Settings Pitch 0.08–100	Specifies the font pitch for scalable monospaced fonts **Notes:** • 10 is the factory default setting. • Pitch refers to the number of fixed-space characters per inch (cpi). • Pitch can be increased or decreased in 0.01-cpi increments. • For non-scalable monospaced fonts, the pitch appears on the display but cannot be changed.
PCL Emulation Settings Orientation Portrait Landscape	Specifies the orientation of text and graphics on a page **Notes:** • Portrait is the factory default setting. • Portrait prints text and graphics parallel to the short edge of the page. • Landscape prints text and graphics parallel to the long edge of the page.

Menu item	Description
PCL Emulation Settings Lines per Page 1–255	Specifies the number of lines that print on each page **Notes:** • 60 is the US factory default setting. 64 is the international default setting. • The printer sets the amount of space between each line based on the Lines per Page, Paper Size, and Orientation settings. Select the desired Paper Size and Orientation before setting Lines per Page.
PCL Emulation Settings A4 Width 198 mm 203 mm	Sets the printer to print on A4-size paper **Notes:** • 198 mm is the factory default setting. • The 203-mm setting sets the width of the page to allow the printing of eighty 10-pitch characters.
PCL Emulation Settings Auto CR after LF Off On	Specifies whether the printer automatically performs a carriage return (CR) after a line feed (LF) control command **Note:** Off is the factory default setting.
PCL Emulation Settings Auto LF after CR Off On	Specifies whether the printer automatically performs a line feed (LF) after a carriage return (CR) control command **Note:** Off is the factory default setting.
Tray Renumber Assign MP Feeder Off None 0–199 Assign Tray [x] Off None 0–199 Assign Manual Paper Off None 0–199 Assign Manual Env Off None 0–199	Configures the printer to work with printer software or programs that use different source assignments for trays, drawers, and feeders **Notes:** • Off is the factory default setting. • None ignores the Select Paper Feed command. This selection is displayed only when it is selected by the PCL 5e interpreter. • 0–199 allows a custom setting to be assigned.

Menu item	Description
Tray Renumber View Factory Defaults MPF Default = 8 T1 Default = 1 T2 Default = 4 T3 Default = 5 T4 Default = 20 T5 Default = 21 Env Default = 6 MPaper Default = 2 MEnv Default = 3	Displays the factory default setting assigned to each tray, drawer, or feeder
Tray Renumber Restore Defaults Yes No	Returns all tray, drawer, and feeder assignments to the factory default settings

HTML menu

Menu Item		Description
Font Name Albertus MT Antique Olive Apple Chancery Arial MT Avant Garde Bodoni Bookman Chicago Clarendon Cooper Black Copperplate Coronet Courier Eurostile Garamond Geneva Gill Sans Goudy Helvetica Hoefler Text Intl CG Times Intl Courier Intl Univers	Joanna MT Letter Gothic Lubalin Graph Marigold MonaLisa Recut Monaco New CenturySbk New York Optima Oxford Palatino StempelGaramond Taffy Times TimesNewRoman Univers Zapf Chancery NewSansMTCS NewSansMTCT New SansMTJA NewSansMTKO	Sets the default font for HTML documents **Note:** The Times font is used in HTML documents that do not specify a font.

Menu item	Description
Font Size 1–255 pt	Sets the default font size for HTML documents **Notes:** • 12 pt is the factory default setting. • Font size can be increased in 1-point increments.
Scale 1–400%	Scales the default font for HTML documents **Notes:** • 100% is the factory default setting. • Scaling can be increased in 1% increments.
Orientation Portrait Landscape	Sets the page orientation for HTML documents **Note:** Portrait is the factory default setting.

Menu item	Description
Margin Size 8–255 mm	Sets the page margin for HTML documents **Notes:** • 19 mm is the factory default setting. • Margin size can be increased in 1-mm increments.
Backgrounds Print Do Not Print	Specifies whether to print backgrounds on HTML documents **Note:** Print is the factory default setting.

Image menu

Menu item	Description
Auto Fit On Off	Selects the optimal paper size, scaling, and orientation **Note:** On is the factory default setting. It overrides scaling and orientation settings for some images.
Invert Off On	Inverts bi-tonal monochrome images **Notes:** • Off is the factory default setting. • This setting does not apply to GIF or JPEG images.
Scaling Best Fit Anchor Center Fit Height/Width Fit Height Fit Width Anchor Top Left	Scales the image to fit the selected paper size **Notes:** • Best Fit is the factory default setting. • When Auto Fit is set to On, Scaling is automatically set to Best Fit.
Orientation Portrait Landscape Rev Portrait Rev Landscape	Sets the image orientation **Note:** Portrait is the factory default setting.

Booklet Adjustments menu

The Booklet Adjustments menu is available only when a booklet finisher is installed. You can select various adjustments from this menu when printing booklets.

To access the Booklet Adjustments menu:

1. Turn the printer off.
2. Hold down 2 ABC and 6 MNO while turning the printer on.

3 Release the buttons when the screen with the progress bar appears.

The printer performs a power-on sequence, and then the **Configuration Menu** appears.

4 Touch the arrows until **Booklet Adjustments** appears.

5 Touch **Booklet Adjustments**.

Menu item	Description
Size of paper JIS B4 Letter A4 Legal 11 x 17 A3 Oficio Folio	Specifies the paper size **Note:** This setting defaults to the Tray 1 paper size value.
Total number of sheets 1–2 sheets 3 sheets 4 sheets 5–7 sheets 8–15 sheets	Specifies the total number of sheets in a booklet **Note:** The factory default setting is 1–2 sheets.
Adjust for folding overlap Top overlap Bottom overlap	Select top or bottom overlap based on prints
Adjust for skew during booklet making Clockwise skew Counter-clockwise skew	Select skew direction based on prints

Help menu

The Help menu consists of a series of Help pages that are stored in the printer as PDF files. They contain information about using the printer and performing printing tasks.

English, French, German, and Spanish translations are stored in the printer. Other translations are available on the Lexmark Web site at **www.lexmark.com**.

Menu item	Description
Print All Guides	Prints all the guides
Color Quality	Provides information about adjusting and customizing color printing
Print Quality	Provides information about solving print quality issues
Printing Guide	Provides information about loading paper and other speciality media
Media Guide	Provides a list of the paper sizes supported in trays, drawers, and feeders
Print Defects Guide	Provides help in determining the printer part causing a repetitive defect

Menu item	Description
Menu Map	Provides a list of the printer control panel menus and settings
Information Guide	Provides help in locating additional information
Connection Guide	Provides information about connecting the printer locally (USB) or to a network
Moving Guide	Provides instructions for safely moving the printer
Supplies Guide	Provides part numbers for ordering supplies

Securing the hard disk and other installed memory

Statement of Volatility

Your printer contains various types of memory that are capable of storing device and network settings, information from embedded solutions, and user data. The types of memory—along with the types of data stored by each—are described below.

- **Volatile memory**—Your device utilizes standard *Random Access Memory* (RAM) to temporarily buffer user data during simple print and copy jobs.
- **Non-volatile memory**—Your device may utilize two forms of non-volatile memory: EEPROM and NAND (flash memory). Both types are used to store the operating system, device settings, network information, scanner and bookmark settings, and embedded solutions.
- **Hard disk memory**—Some devices have a hard disk drive installed. The printer hard disk is designed for device-specific functionality and cannot be used for long term storage for data that is not print-related. The hard disk does not provide the capability for users to extract information, create folders, create disk or network file shares, or FTP information directly from a client device. The hard disk can retain buffered user data from complex scan, print, copy, and fax jobs, as well as form data, and font data.

There are several circumstances under which you might wish to erase the contents of the memory devices installed in your printer. A partial list includes:

- The printer is being decommissioned
- The printer hard drive is being replaced
- The printer is being moved to a different department or location
- The printer is being serviced by someone from outside your organization
- The printer is being removed from your premises for service

Disposing of a hard drive

Note: Not all printers have a hard disk installed.

In high-security environments, it may be necessary to take additional steps to ensure that confidential data stored on the printer hard disk cannot be accessed once the printer—or its hard disk—is removed from your premises. While most data can be erased electronically, you may want to consider one or more of the following actions before disposing of a printer or hard disk:

- **Degaussing**—Flushes the hard drive with a magnetic field that erases stored data
- **Crushing**—Physically compresses the hard disk to break component parts and render them unreadable
- **Milling**—Physically shreds the hard disk into small metal bits

Note: While most data can be erased electronically, the only way to guarantee that all data is completely erased is to physically destroy each memory device on which data could have been stored.

Erasing volatile memory

The volatile memory (RAM) installed on your printer requires a power source to retain information. To erase the buffered data, simply power down the device.

Erasing non-volatile memory

There are several methods available for erasing data stored in non-volatile memory, depending on the type of memory device installed, and the type of data stored by that device. For information about how to erase each type of information, see the *Embedded Web Server Administrator Guide*.

- **Individual settings**—You can erase individual printer settings using the printer control panel, or the printer Embedded Web Server.
- **Device and network settings**—You can erase device and network settings and restore factory defaults by resetting the NVRAM using the printer Config menu.
- **Security settings**—You can restore factory defaults or erase security settings by selecting a behavior for the Security Reset Jumper in the Embedded Web Server, and then moving a hardware jumper located on the motherboard.
- **Fax data**—If your printer does not contain a hard disk, or you have chosen NAND for fax storage, you can erase fax settings and data by resetting the NVRAM using the printer Config menu.

  Note: If your printer has a hard disk that has been partitioned for fax storage, you must reformat that partition to erase fax data and settings.
- **Embedded solutions**—You can erase information and settings associated with embedded solutions by uninstalling the solutions, or by restoring factory defaults using the printer Config menu.

Erasing printer hard disk memory using the Embedded Web Server

Note: Not all printers have a hard disk installed.

Configuring Disk Wiping in the printer menus enables you to remove residual confidential material left by scan, print, copy, and fax jobs, by securely overwriting files that have been marked for deletion.

1. From the Embedded Web Server, click **Settings** > **Security** > **Disk Wiping**.

   Note: Printers without a hard disk will not display Disk Wiping in the Security menu.
2. For Wiping Mode, select one of the following:
   - **Auto**—Use this to automatically wipe data following each use (can increase the time between jobs).
   - **Manual**—Use this to set up a schedule for disk wiping.
3. Click **Submit**.
4. From the Security menu, click **Disk Wiping**.
5. If you have enabled Manual mode and wish to set up a schedule for disk wiping, click **Scheduled Disk Wiping**.

   Notes:

   - Scheduled Disk Wiping will not be displayed until after Manual mode has been selected and submitted.
   - If you do not wish to schedule disk wiping, then you can skip steps 5 and 6.
6. Use the Time and Day(s) options to designate when disk wiping should occur, and then click **Add**. Repeat as needed to schedule additional times for disk wiping. When finished, use the browser Back button to return to the Disk Wiping setup screen.

   Note: Disk wiping can take from several minutes to more than an hour, during which time the printer will be unavailable for other user tasks.

7 From the Disk Wiping settings screen, select one of the following for each method of disk wiping (Automatic, Manual, and Scheduled):

- **Single Pass**—This lets you overwrite the printer hard disk in a single pass with a repeating bit pattern.
- **Multi-pass**—This lets you overwrite the printer hard disk with random bit patterns several times, followed by a verification pass. A secure overwrite is compliant with the DoD 5220.22-M standard for securely erasing data from a hard disk. Highly confidential information should be wiped using this method.

8 Click **Submit**.

Configuring printer hard disk encryption using the Embedded Web Server

Note: Not all printers have a hard disk installed.

Enabling hard disk encryption helps prevent the loss of sensitive data in the event your printer or its hard disk is stolen.

1 From the Embedded Web Server, click **Settings** > **Security** > **Disk Encryption**.

Note: Printers without a hard disk will not display Disk Encryption in the Security menu.

2 From the Disk Encryption menu, select **Enable**.

Warning—Potential Damage: Enabling disk encryption will erase the contents of the printer hard disk.

Note: Disk encryption can take from several minutes to more than an hour, during which the printer will be unavailable for other user tasks.

3 Click **Submit**.

Maintaining the printer

Periodically, certain tasks are required to maintain optimum print quality.

Cleaning the exterior of the printer

1. Make sure that the printer is turned off and unplugged from the wall outlet.

   CAUTION—SHOCK HAZARD: To avoid the risk of electric shock when cleaning the exterior of the printer, unplug the power cord from the wall outlet and disconnect all cables to the printer before proceeding.

2. Remove paper from the standard exit bin.
3. Dampen a clean, lint-free cloth with water.

   Warning—Potential Damage: Do not use household cleaners or detergents, as they may damage the finish of the printer.

4. Wipe only the outside of the printer, making sure to include the standard exit bin.

   Warning—Potential Damage: Using a damp cloth to clean the interior may cause damage to your printer.

5. Make sure the paper support and standard exit bin are dry before beginning a new print job.

Cleaning the printhead lenses

Clean the printhead lenses when you encounter print quality problems.

1. Open the front door.

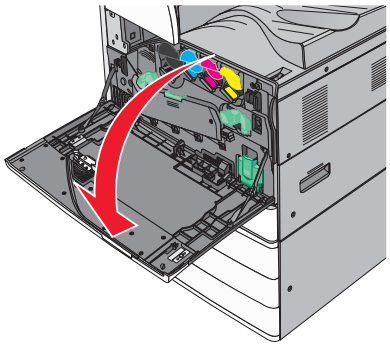

2 Slide the release lever to the left to unlock the cover.

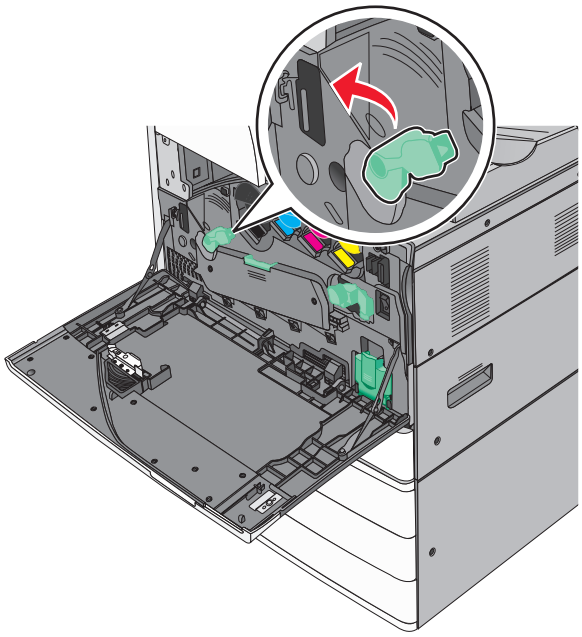

3 Open the cover.

Warning—Potential Damage: To avoid overexposing the photoconductor unit, do not leave the cover open for more than 10 minutes.

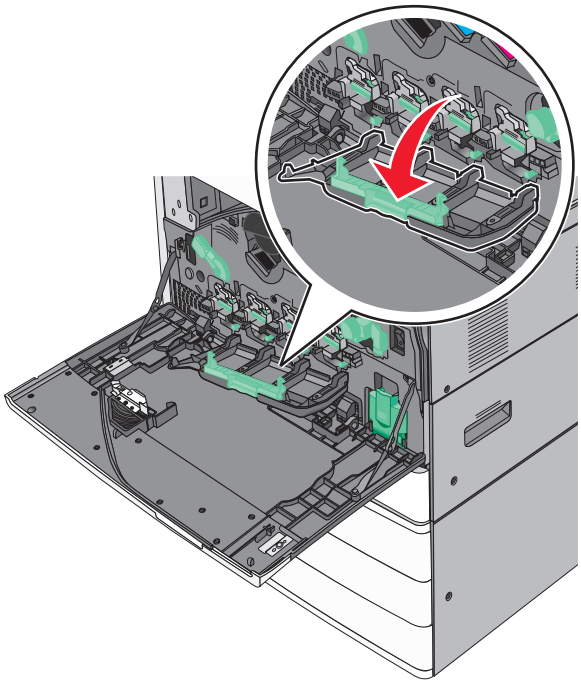

4 Locate the printhead wipers.

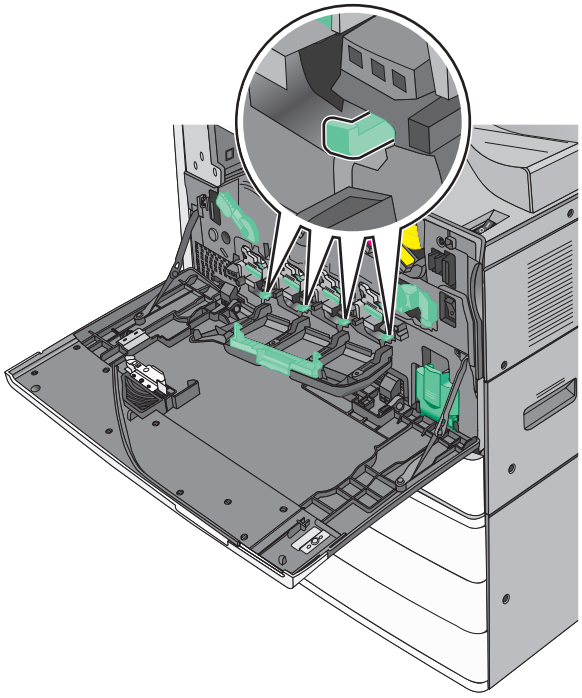

5 Gently pull the printhead wipers out until it stops, and then slowly slide them back into place.

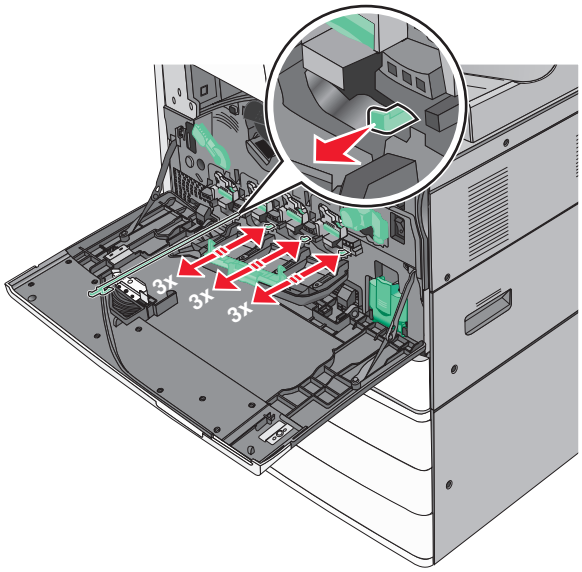

6 Close the cover.

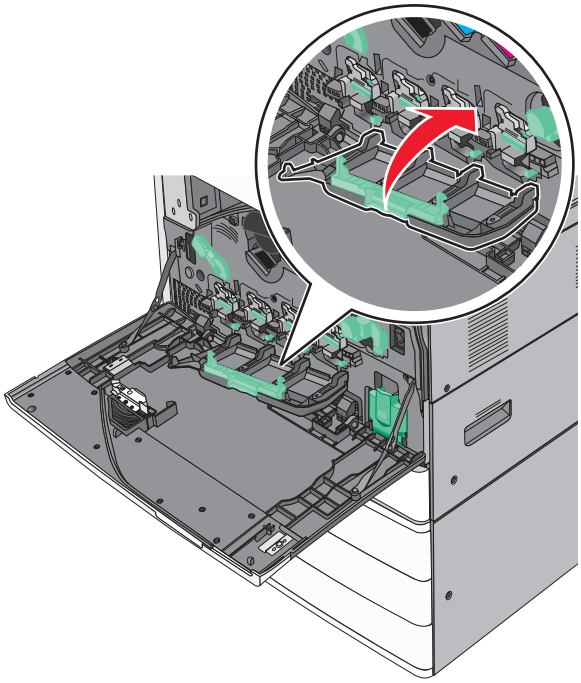

7 Slide the release lever to the right to lock the cover.

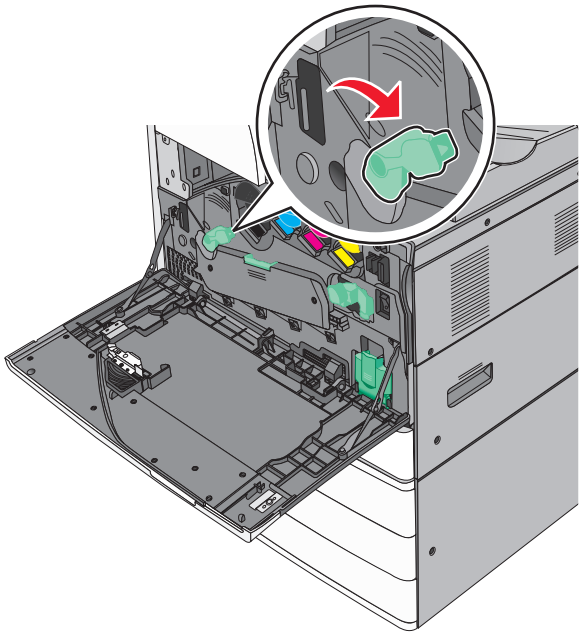

8 Close the front door.

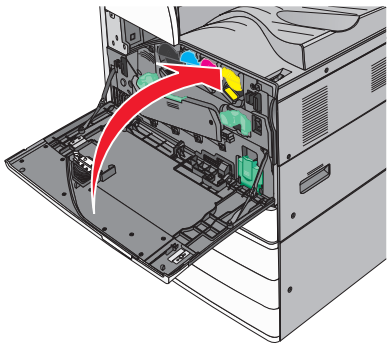

Storing supplies

Choose a cool, clean storage area for the printer supplies. Store supplies right side up in their original packing until you are ready to use them.

Do not expose supplies to:

- Direct sunlight
- Temperatures above 35°C (95°F)
- High humidity above 80%
- Salty air
- Corrosive gases
- Heavy dust

Checking the status of supplies

A message appears on the display when a replacement supply item is needed or when maintenance is required.

Checking the status of supplies from the printer control panel

From the home screen, touch **Status/Supplies** > **View Supplies**.

Checking the status of supplies from a network computer

Note: The computer must be connected to the same network as the printer.

1 Type the printer IP address into the address field of your Web browser.

If you do not know the IP address of the printer, you can:

- View the IP address on the printer control panel in the TCP/IP section under the Networks/Ports menu.
- Print a network setup page or the menu settings pages and locate the IP address in the TCP/IP section.

2 Click **Device Status**.

The Device Status page appears, displaying a summary of supply levels.

Ordering supplies

To order supplies in the U.S., contact Lexmark at 1-800-539-6275 for information about Lexmark authorized supplies dealers in your area. In other countries or regions, visit the Lexmark Web site at **www.lexmark.com** or contact the place where you purchased the printer.

Note: All life estimates for printer supplies assume printing on letter- or A4-size plain paper.

Ordering toner cartridges

When **88.xx [color] cartridge low** or **88.xx [color] cartridge nearly low** appears, order a new cartridge.

When **88 Replace [color] cartridge** appears, replace the specified cartridge.

Estimated cartridge yield is based on the ISO/IEC 19798 standard (with about 5% coverage per color). Extremely low print coverage (less than 1.25% for a color) for extended periods of time may negatively affect actual yield for that color and may cause cartridge parts to fail prior to exhaustion of toner.

Recommended toner cartridges and part numbers

Part name	Part number
Black high-yield toner cartridge	C950X2KG
Yellow high-yield toner cartridge	C950X2YG
Magenta high-yield toner cartridge	C950X2MG
Cyan high-yield toner cartridge	C950X2CG

Ordering a photoconductor unit

When **84.xx [Color] photoconductor low** or **84.xx [Color] photoconductor nearly low** appears, order a replacement photoconductor unit.

When **84.xx Replace [color] photoconductor** appears, replace the specified photoconductor.

Recommended photoconductor units and part numbers

Part name	Part number
Photoconductor unit • Black • Cyan • Magenta • Yellow	C950X71G
CMY (Cyan, Magenta, Yellow) Photoconductor Kit **Note:** CMY photoconductor units may reach end of life all at the same time.	C950X73G

Ordering a waste toner bottle

When **82.xx Waste toner bottle nearly full** appears, order a replacement waste toner bottle.

When **82.xx Replace waste toner bottle** appears, replace the waste toner bottle.

Note: Waste toner bottle reuse is not recommended.

Part name	Part number
Waste toner bottle	C950X76G

Ordering staple cartridges

When **Staples Low** or **Staples Empty** appears, order the specified staple cartridge.

For more information, see the illustrations inside the stapler door.

Part name	Part number
Staple Cartridges--3 pack (Staples G5)	25A0013
Advanced Booklet Staples (Staples G11 and Staples G12)	21Z0357

Replacing Supplies

Replacing a toner cartridge

1 Open the front door.

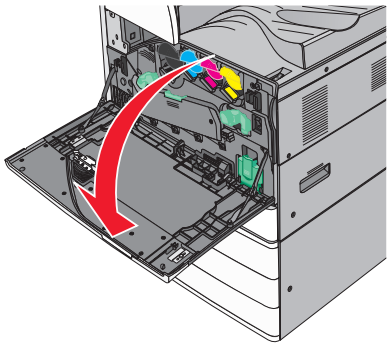

2 Put your hand under the dent of the toner cartridge, and then slightly lift up the cartridge.

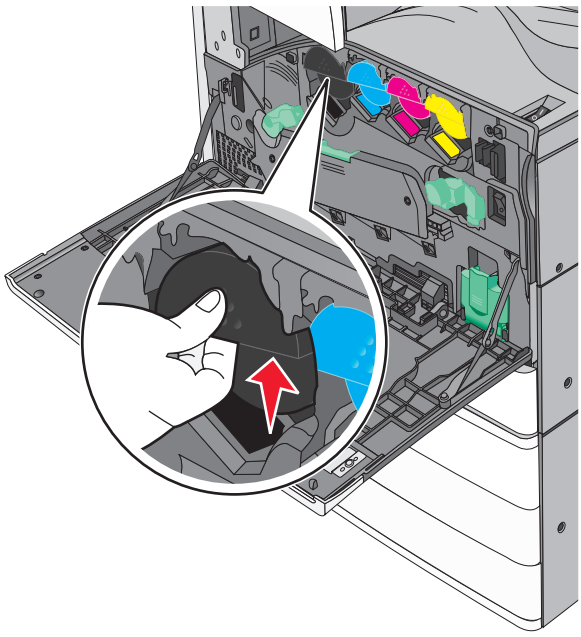

3 Pull the toner cartridge out.

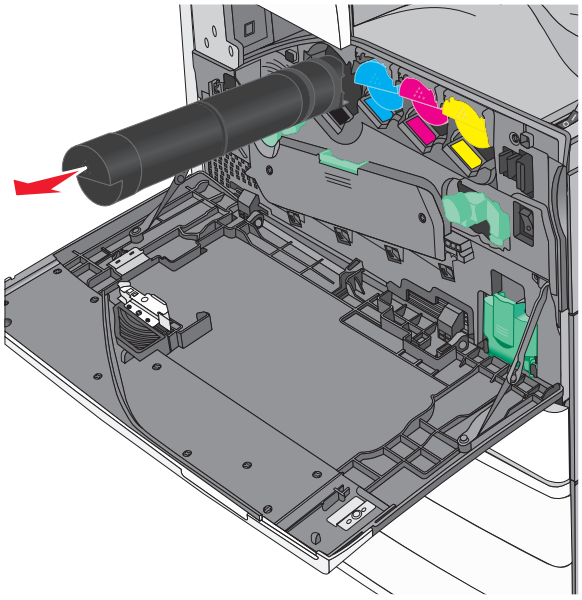

4 Unpack the replacement toner cartridge, and then shake it to redistribute the toner.

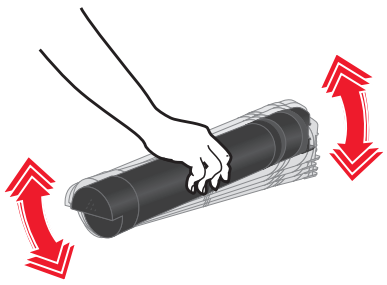

5 Insert the new cartridge into the printer.

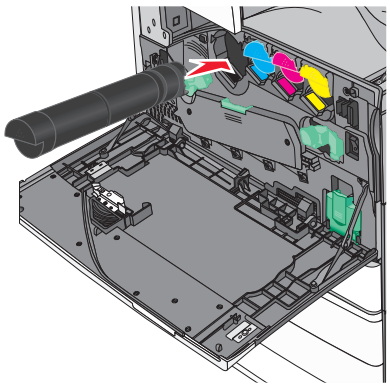

6 Close the front door.

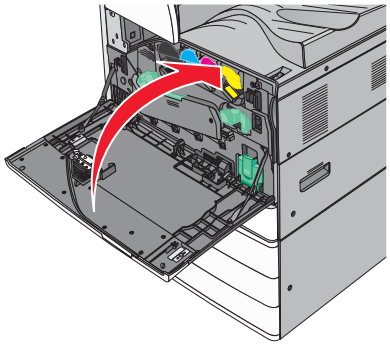

Replacing the waste toner bottle

1 Turn the printer off.

2 Open the front door.

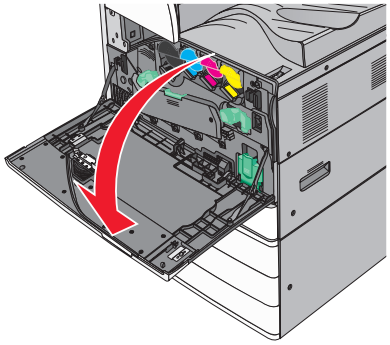

3 Remove the used waste toner bottle.

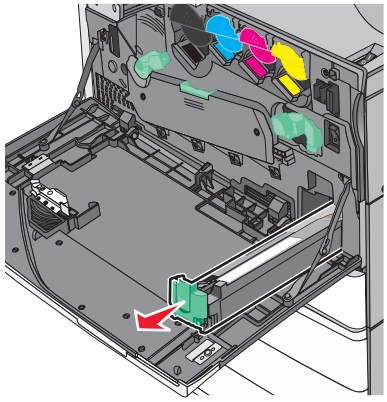

4 Unpack the new waste toner bottle.

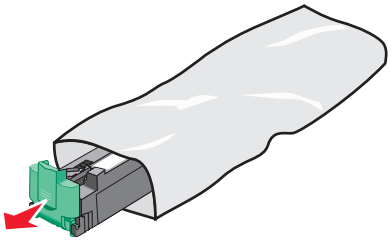

5 Insert the new waste toner bottle into the printer until it *clicks* into place.

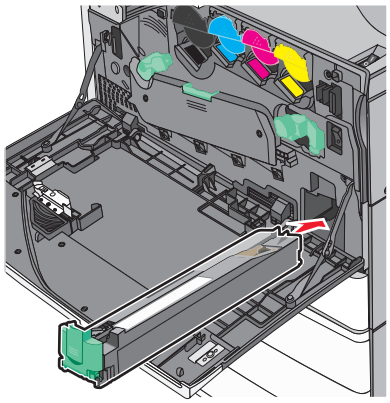

6 Rotate the release lever counterclockwise to open the cover.

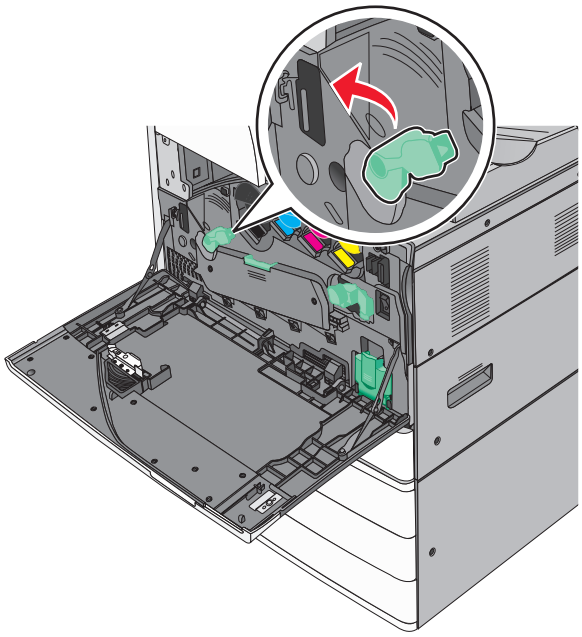

7 Lower the cover.

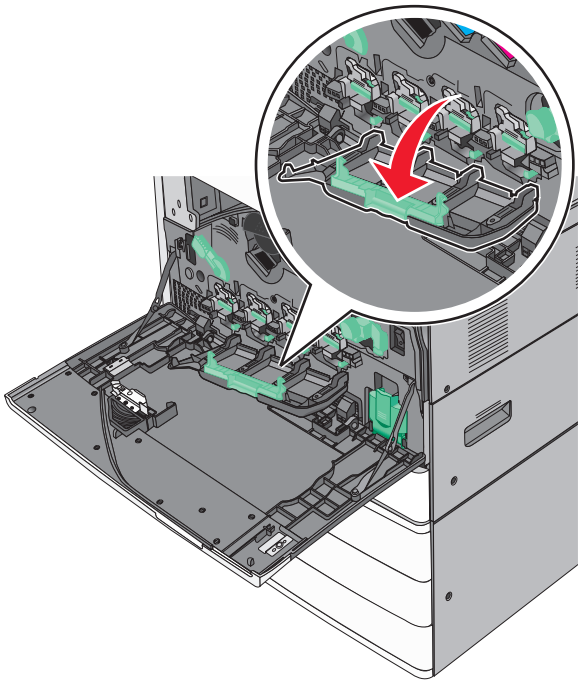

8 Slide out the printhead wipers.

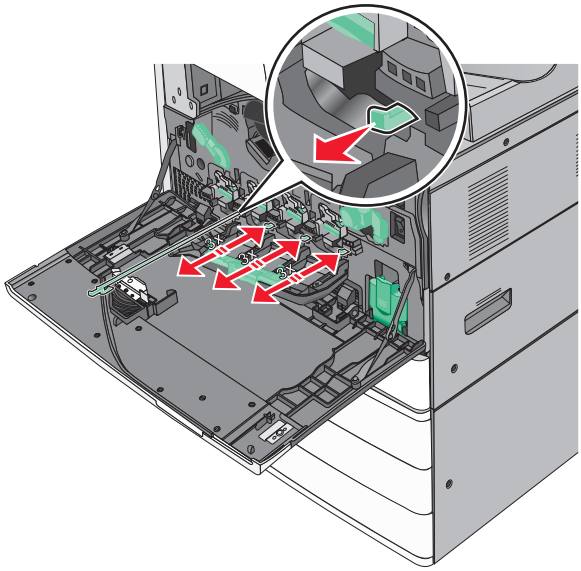

9 Slide the printhead wipers back into place.

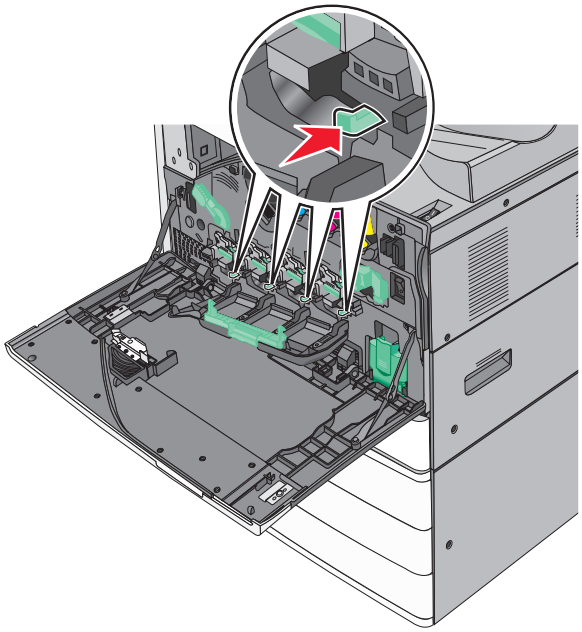

10 Close the cover.

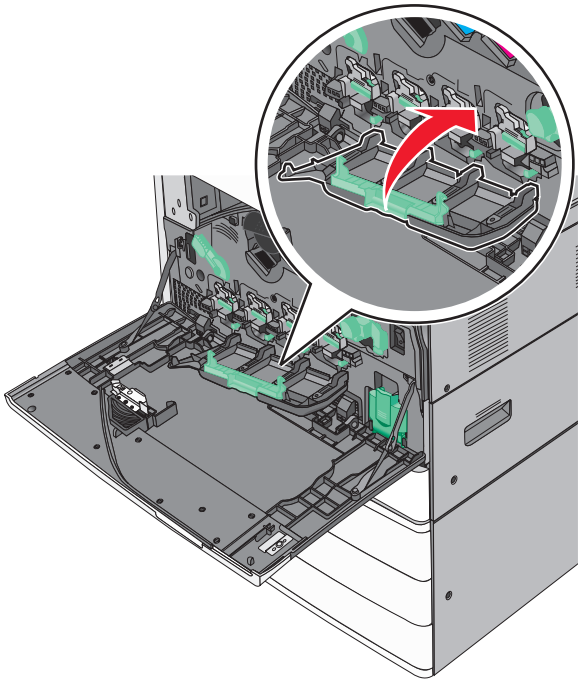

11 Rotate the release lever clockwise to lock the cover.

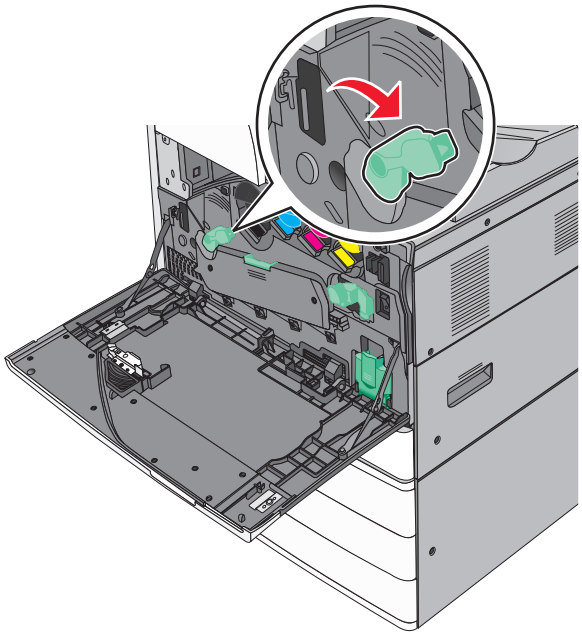

12 Close the front door.

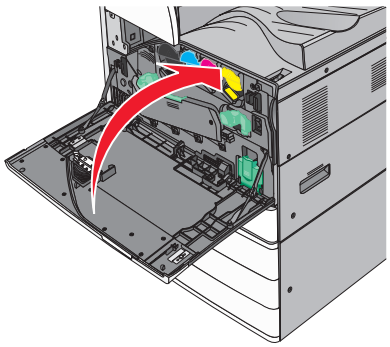

13 Turn the printer back on.

Replacing a photoconductor unit

1 Open the front door.

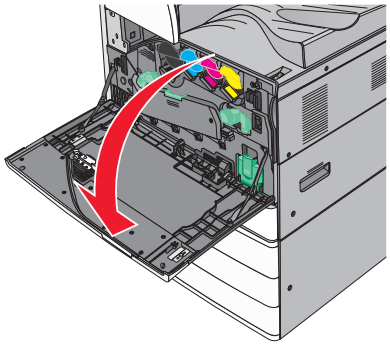

2 Rotate the release lever counterclockwise to open the cover.

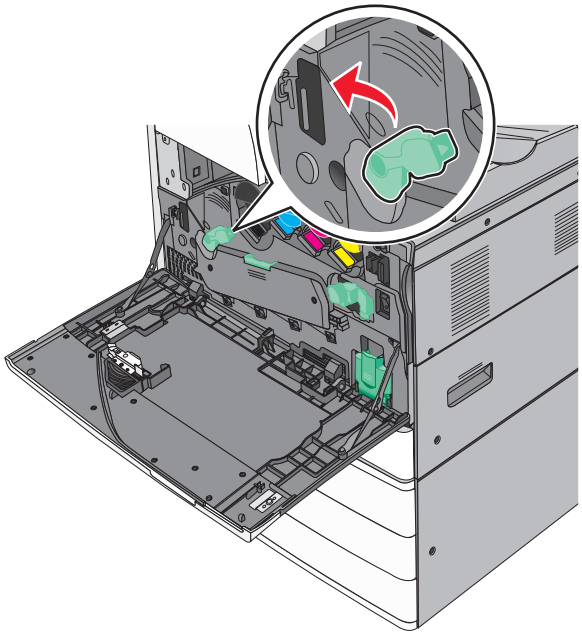

3 Lower the cover.

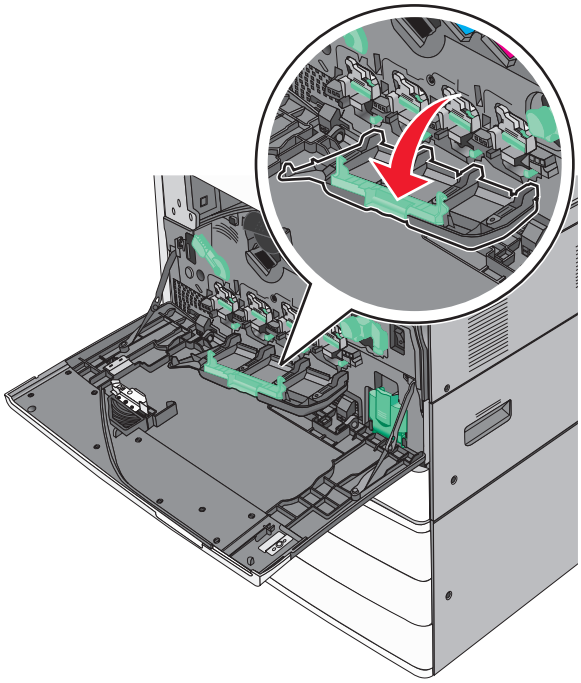

Warning—Potential Damage: To avoid overexposing the photoconductor unit, do not leave the door open for more than 10 minutes.

4 Grasp the handle of the photoconductor unit and pull it out of the machine.

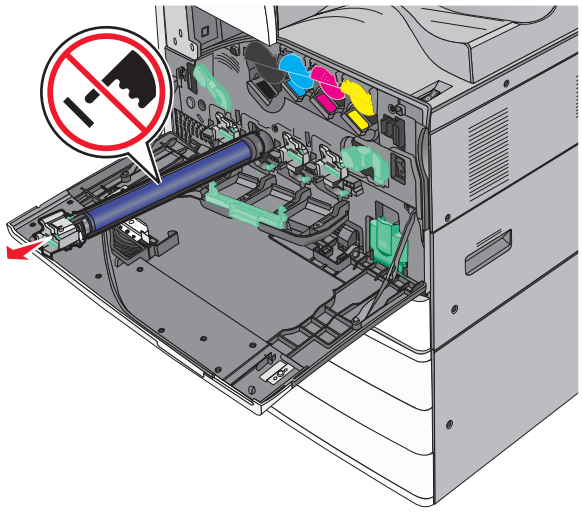

5 Unpack the replacement photoconductor unit.

6 Align and insert the end of photoconductor unit.

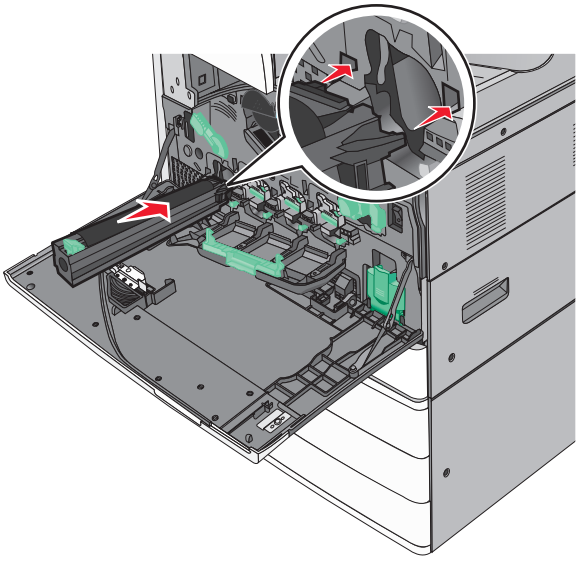

7 Remove the tape from the top of the photoconductor unit.

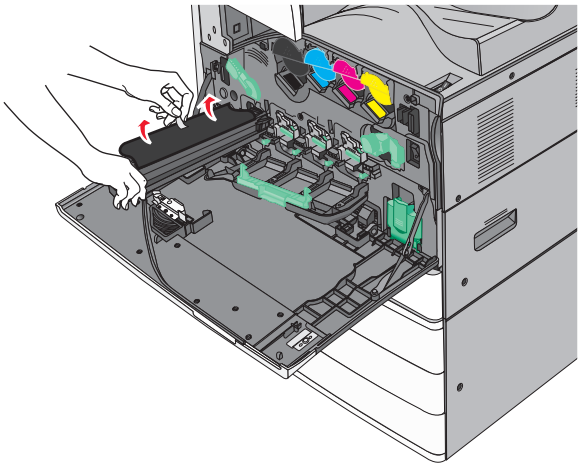

8 Push the tab forward to insert the photoconductor unit.

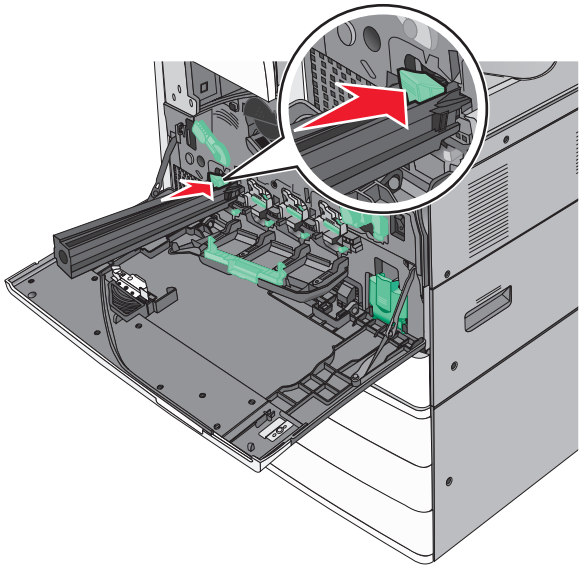

9 Push the photoconductor unit until it *clicks* into place

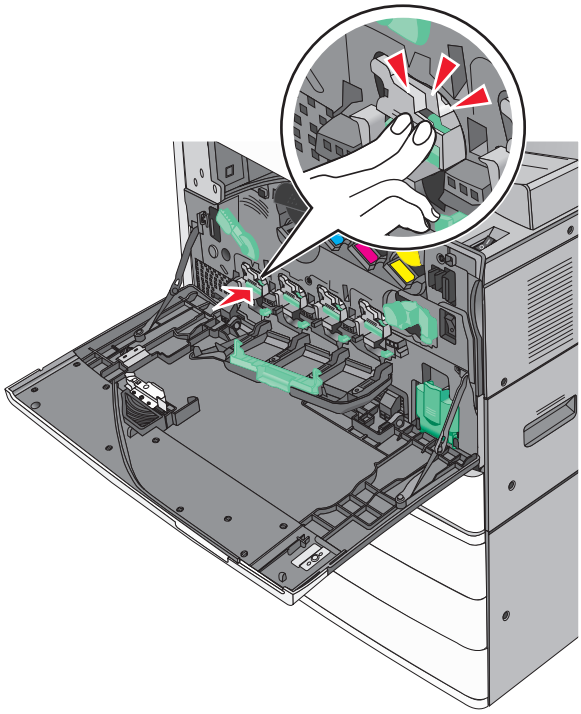

10 Close the cover.

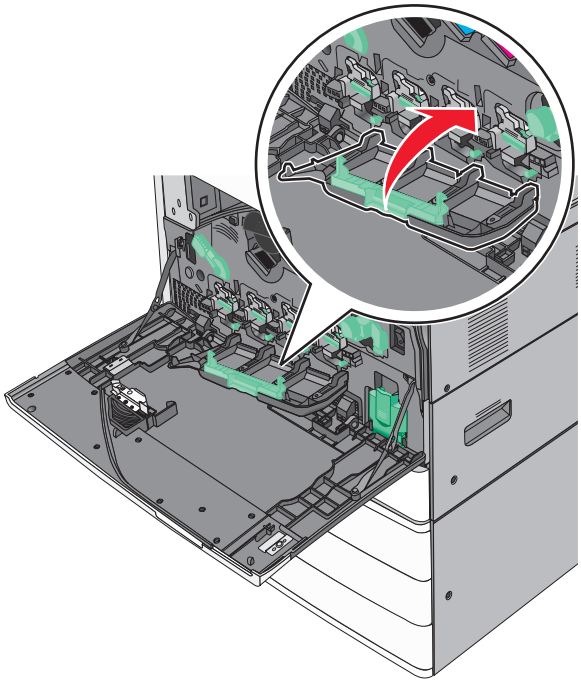

11 Rotate the release lever clockwise to lock the cover.

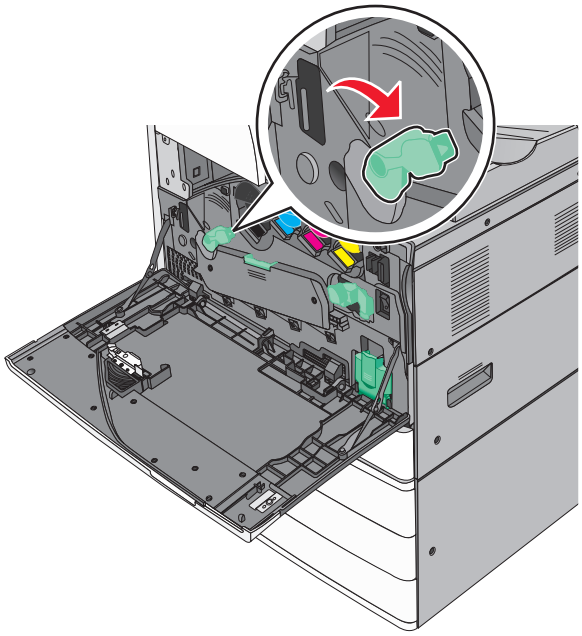

12 Close the front door.

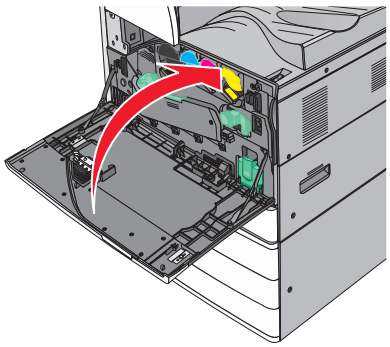

Moving the printer

Before moving the printer

CAUTION—POTENTIAL INJURY: The printer weight is greater than 18 kg (40 lb) and requires two or more trained personnel to lift it safely.

CAUTION—POTENTIAL INJURY: Before moving the printer, follow these guidelines to avoid personal injury or printer damage:

- Turn the printer off using the power switch, and then unplug the power cord from the wall outlet.
- Disconnect all cords and cables from the printer before moving it.
- Lift the printer off of the optional drawer and set it aside instead of trying to lift the drawer and printer at the same time.

  Note: Use the handholds located on both sides of the printer to lift it off the optional drawer.

Warning—Potential Damage: Damage to the printer caused by improper moving is not covered by the printer warranty.

Moving the printer to another location

The printer and options can be safely moved to another location by following these precautions:

- Any cart used to move the printer must have a surface able to support the full footprint of the printer. Any cart used to move the options must have a surface able to support the dimensions of the options.
- Keep the printer in an upright position.
- Avoid severe jarring movements.

Shipping the printer

When shipping the printer, use the original packaging or call the place of purchase for a relocation kit.

Administrative support

Finding advanced networking and administrator information

This chapter covers basic administrative support tasks using the Embedded Web Server. For more advanced system support tasks, see the *Networking Guide* on the *Software and Documentation* CD and the *Embedded Web Server Administrator's Guide* on the Lexmark Web site at **http://support.lexmark.com**.

Using the Embedded Web Server

If the printer is installed on a network, then the Embedded Web Server is available for a range of functions including:

- Viewing a virtual display of the printer control panel
- Checking the status of the printer supplies
- Configuring printer settings
- Configuring network settings
- Viewing reports

To access the Embedded Web Server for your printer:

1. Type the printer IP address into the address field of your Web browser.

   Notes:

   - If you do not know the IP address of the printer, then print a network setup page, and then locate the IP address in the TCP/IP section.
   - If you are using a proxy server, then temporarily disable it to load the Embedded Web Server correctly.

2. Press **Enter**.

Checking the virtual display

1. Open an Embedded Web Server associated with your printer.

   Type the printer IP address into the address field of your Web browser.

   If you do not know the IP address of the printer, you can:

   - View the IP address on the printer control panel in the TCP/IP section under the Networks/Ports menu.
   - Print a network setup page or the menu settings pages and locate the IP address in the TCP/IP section.

2. Check the virtual display that appears in the top left corner of the screen.

   The virtual display works as an actual display would work on a printer control panel, showing printer messages.

Checking the status of the printer

1. Type the printer IP address into the address field of your Web browser.

If you do not know the IP address of the printer, you can:

- View the IP address on the printer control panel in the TCP/IP section under the Networks/Ports menu.
- Print a network setup page or the menu settings pages and locate the IP address in the TCP/IP section.

2. Click **Device Status**.

The device status shows the following:

- Paper tray settings
- Level of toner in the print cartridge
- Percentage of life remaining in the maintenance kit
- Capacity measurements of certain printer parts

Setting up e-mail alerts

Configure the printer to send you e-mail alerts when the supplies are getting low or when the paper needs to be changed or added, or when there is a paper jam.

1. Type the printer IP address into the address field of your Web browser.

   If you do not know the IP address of the printer, you can:

   - View the IP address on the printer control panel in the TCP/IP section under the Networks/Ports menu.
   - Print a network setup page or the menu settings pages and locate the IP address in the TCP/IP section.

2. Click **Settings**.
3. Under Other Settings, click **E-mail Alert Setup**.
4. Select the items for notification, and type the e-mail addresses.
5. Click **Submit**.

Note: For information on setting up the e-mail server, contact your system support person.

Viewing reports

You can view some reports from the Embedded Web Server. These reports are useful for assessing the status of the printer, the network, and supplies.

To view reports from a network printer:

1. Type the printer IP address into the address field of your Web browser.

   If you do not know the IP address of the printer you can:

   - View the IP address on the printer control panel in the TCP/IP section under the Networks/Ports menu.
   - Print a network setup page or the menu settings pages and locate the IP address in the TCP/IP section.

2. Click **Reports**, and then click the type of report you want to view.

Restoring factory default settings

If you want to retain a list of the current menu settings for reference, then print a menu settings page before restoring the factory default settings.

Warning—Potential Damage: Restoring factory defaults returns most printer settings to the original factory default settings. Exceptions include the display language, custom sizes and messages, and network/port menu settings. All downloads stored in RAM are deleted. Downloads stored in flash memory or on a printer hard disk are not affected.

From the home screen, navigate to:

> **Settings** > **General Settings** > **Factory Defaults** > **Restore Now** >

Clearing jams

By carefully selecting papers and specialty media and loading it properly, you should be able to avoid most jams. If jams do occur, follow the steps outlined in this section.

To clear a jam message and resume printing, clear the entire paper path, and then touch **Continue** to clear the message and resume printing. If Jam Recovery is set to On, then the printer prints a new copy of the page that jammed. If Jam Recovery is set to Auto, then the printer reprints the jammed page if enough printer memory is available.

Note: Jam recovery is set to Auto by default. The printer reprints jammed pages unless the memory required to hold the pages is needed for other printer tasks.

Avoiding jams

Paper tray recommendations

- Make sure the paper lies flat in the tray.
- Do not remove a tray while the printer is printing.
- Do not load a tray while the printer is printing. Load it prior to printing, or wait for a prompt to load it.
- Do not load too much paper. Make sure the stack height does not exceed the indicated maximum height.
- Make sure the guides in the tray or the multipurpose feeder are properly positioned and are not pressing too tightly against the paper or envelopes.
- Push the tray in firmly after loading paper.

Paper recommendations

- Use only recommended paper or specialty media.
- Do not load wrinkled, creased, damp, bent, or curled paper.
- Flex and straighten paper before loading it.

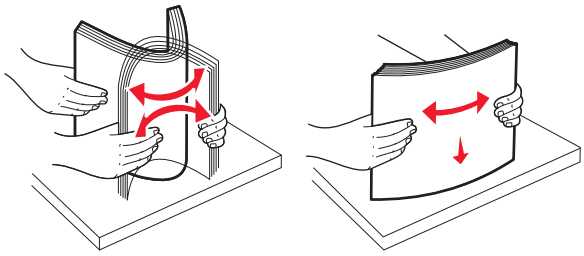

- Do not use paper that has been cut or trimmed by hand.
- Do not mix paper sizes, weights, or types in the same stack.
- Make sure all sizes and types are set correctly in the printer control panel menus.
- Store paper per manufacturer recommendations.

Understanding jam numbers and locations

When a jam occurs, a message indicating the jam location appears on the display. Open doors and covers and remove trays to access jam locations. To resolve any paper jam message, you must clear all jammed paper from the paper path.

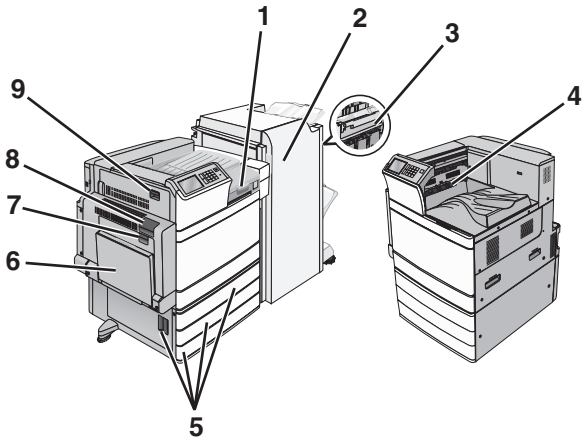

Area	Area name	Jam numbers	What to do
1	Cover F	**281** **4yy.xx**	Open cover F, and then remove the jammed paper.
2	Door G	**455** **4yy.xx**	Open door G, and then remove the jammed paper. For staple jams, remove the staple cartridge, and then clear the staple jam.
3	Door H	**4yy.xx**	Open door H, and then remove the jammed paper.
4	Standard exit bin	**201-202** **203**	Remove all paper from the standard exit bin, and then remove the jammed paper.
5	Door C Tray [x]	**24x**	Open door C, and then remove the jammed paper. Open each tray, and then remove any jams.
6	Multipurpose feeder	**250**	Remove all paper from the multipurpose feeder, and then remove the jammed paper.
7	Door B	**230**	Open door B, and then remove the jammed paper.
8	Door A	**201–202** **231** **281**	Open door A, and then remove the jammed paper.
9	Door D	**203**	Open door A, and then door D, and then remove the jammed paper.

201–202 paper jams

If the jammed paper is visible in the standard exit bin, then firmly grasp the paper on each side, and then gently pull it out.

Note: Make sure all paper fragments are removed.

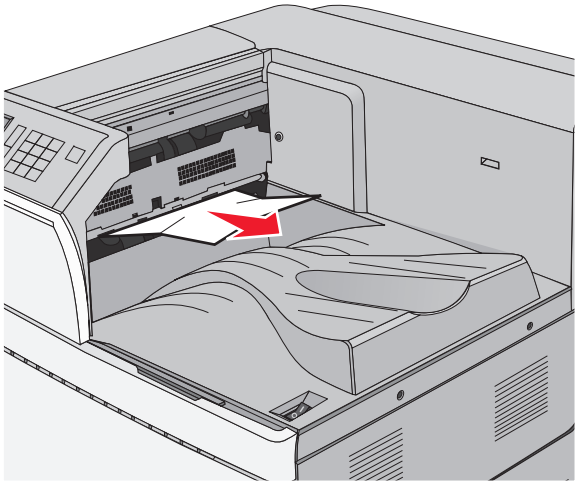

Paper jam in the fuser

1 Open door A by lifting the release latch and lowering the door.

CAUTION—HOT SURFACE: The inside of the printer might be hot. To reduce the risk of injury from a hot component, allow the surface to cool before touching.

2 Pull the green lever down.

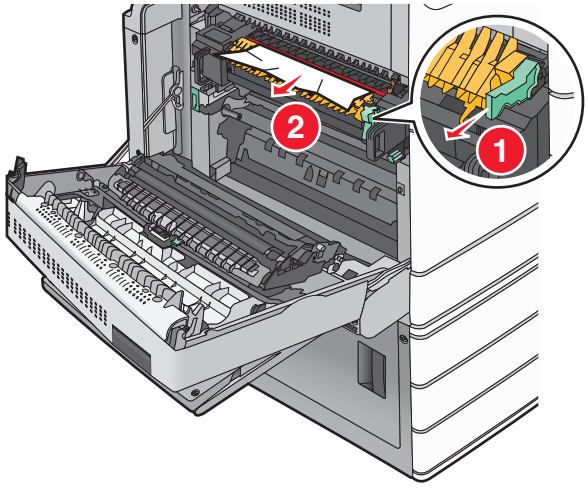

3 Firmly grasp the jammed paper on each side, and then gently pull it out.

Warning—Potential Damage: Do not touch the center of the fuser unit. Doing so will damage the fuser.

Note: Make sure all paper fragments are removed.

4 Push the green lever back into place.

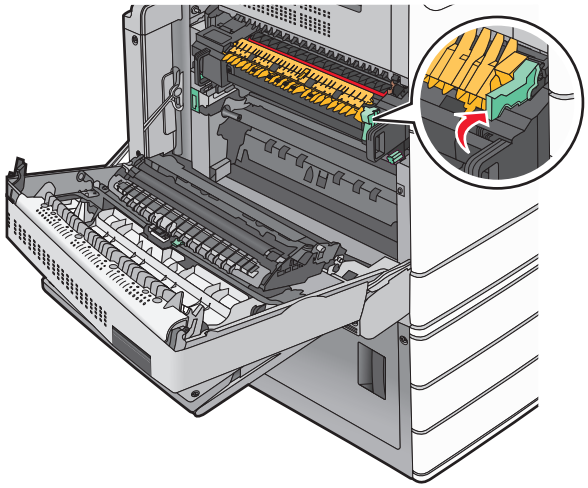

5 Close door A.

6 If necessary, touch **Continue** from the printer control panel.

Paper jam under the fuser

1 Open door A.

CAUTION—HOT SURFACE: The inside of the printer might be hot. To reduce the risk of injury from a hot component, allow the surface to cool before touching.

2 If the jammed paper is visible under the fuser, then firmly grasp the paper on each side, and then gently pull it out.

Note: Make sure all paper fragments are removed.

3 Close door A.

4 If necessary, touch **Continue** from the printer control panel.

203 paper jam

If the jammed paper is visible in the standard exit bin, then firmly grasp the paper on each side, and then gently pull it out.

Note: Make sure all paper fragments are removed.

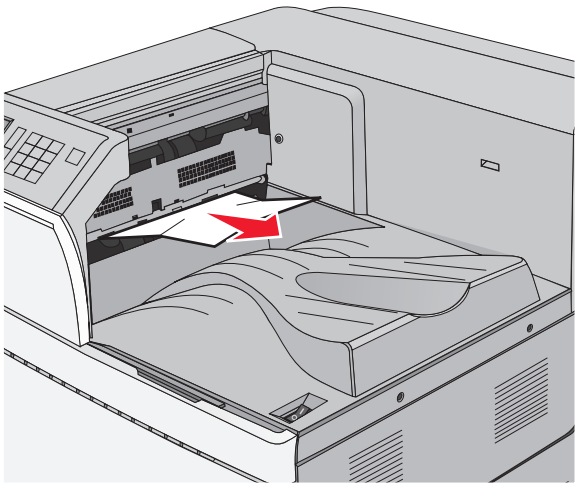

1 Open door A, and then door D by lifting the release latch of each door and lowering the doors.

CAUTION—HOT SURFACE: The inside of the printer might be hot. To reduce the risk of injury from a hot component, allow the surface to cool before touching.

2 Firmly grasp the jammed paper on each side, and then gently pull it out.

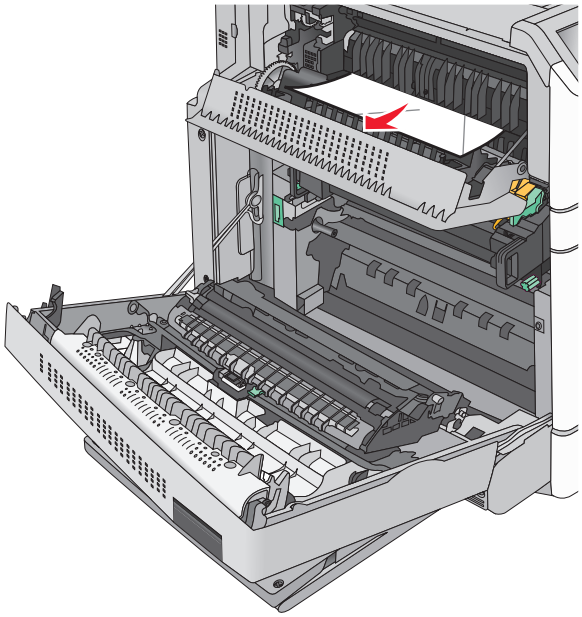

Note: Make sure all paper fragments are removed.

3 Close door D, and then close door A.

4 If necessary, touch **Continue** from the printer control panel.

230 paper jam

1 Lower the multipurpose feeder, and then open door B.

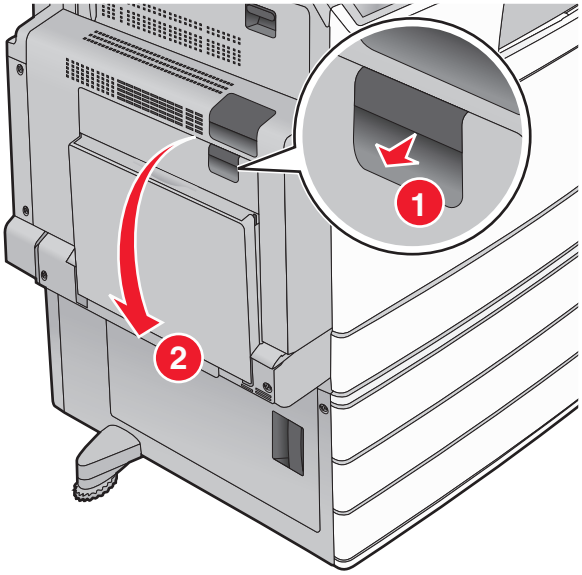

2 Firmly grasp the jammed paper on each side, and then gently pull it out.

Note: Make sure all paper fragments are removed.

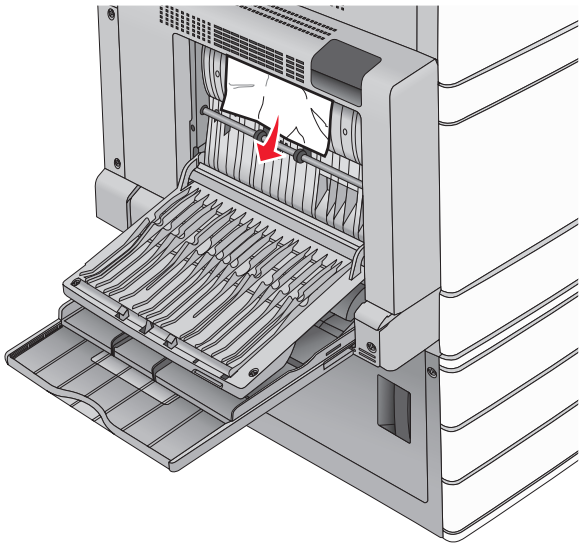

3 Close door B.

4 If necessary, touch **Continue** from the printer control panel.

231 paper jam

1 Open door A by lifting the release latch, and then lowering the door.

CAUTION—HOT SURFACE: The inside of the printer might be hot. To reduce the risk of injury from a hot component, allow the surface to cool before touching it.

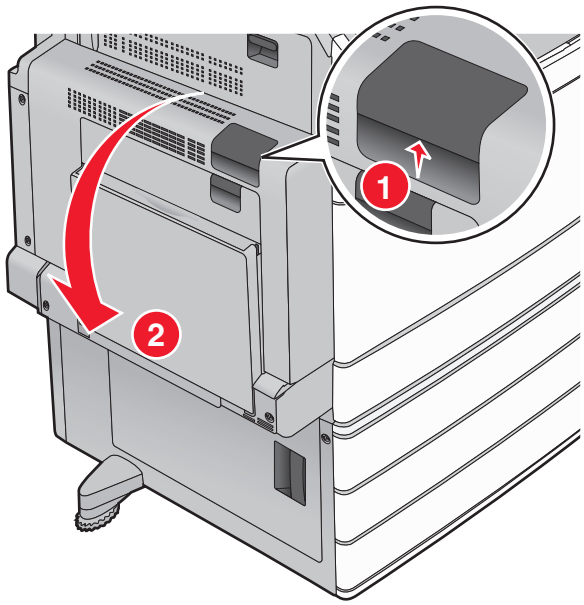

2 Pull the green lever down.

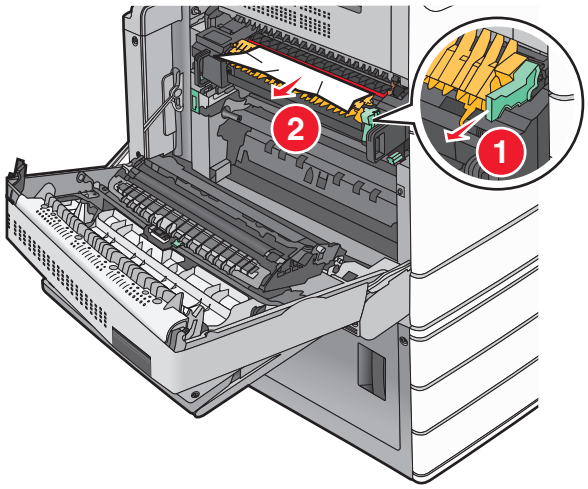

Note: Make sure all paper fragments are removed.

3 Firmly grasp the jammed paper on each side, and then gently pull it out.

4 Push the green lever back into place.

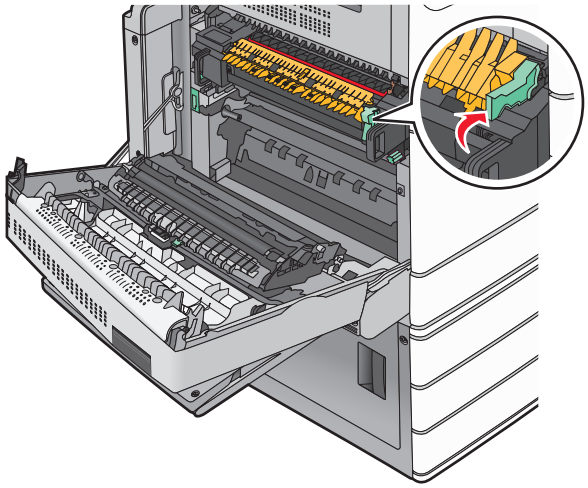

5 Close door A.

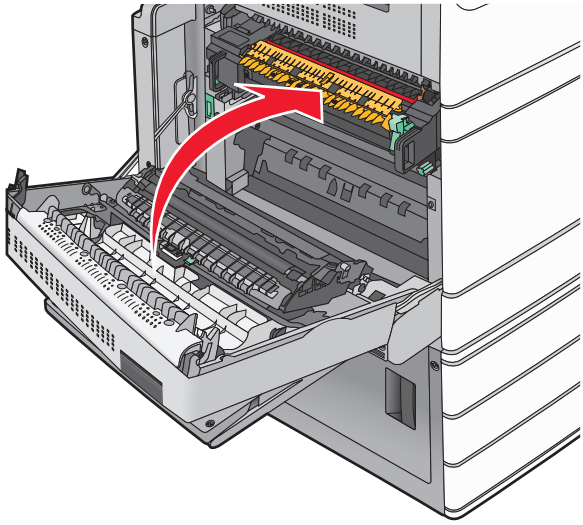

6 If necessary, touch **Continue** from the printer control panel.

24x paper jam

Paper jam in Tray 1

1 Open Tray 1.

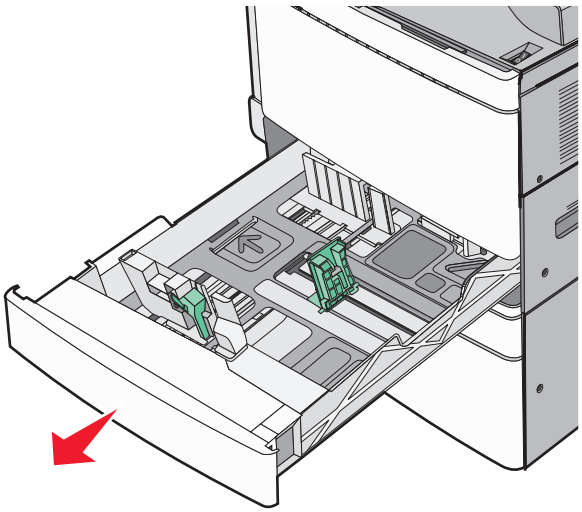

2 Firmly grasp the jammed paper on each side, and then gently pull it out.

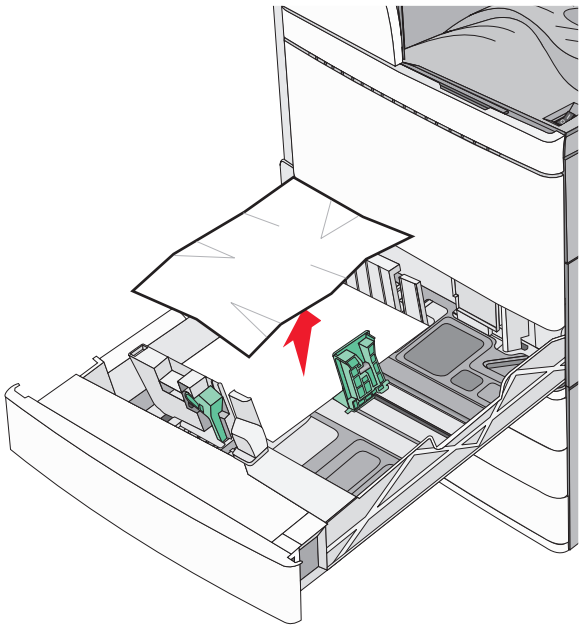

Note: Make sure all paper fragments are removed.

3 Close Tray 1.

4 If necessary, touch **Continue, jam cleared** from the printer control panel.

Paper jam in one of the optional trays

1 Check door C, and then pull the jammed pages out.

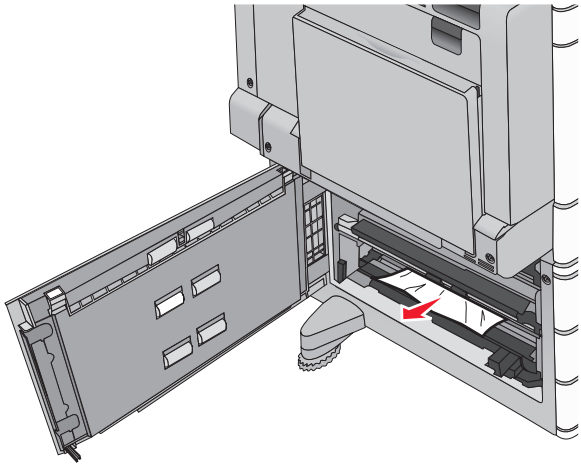

Note: Make sure all paper fragments are removed.

2 Open the specified tray.

3 Firmly grasp the jammed paper on each side, and then gently pull it out.

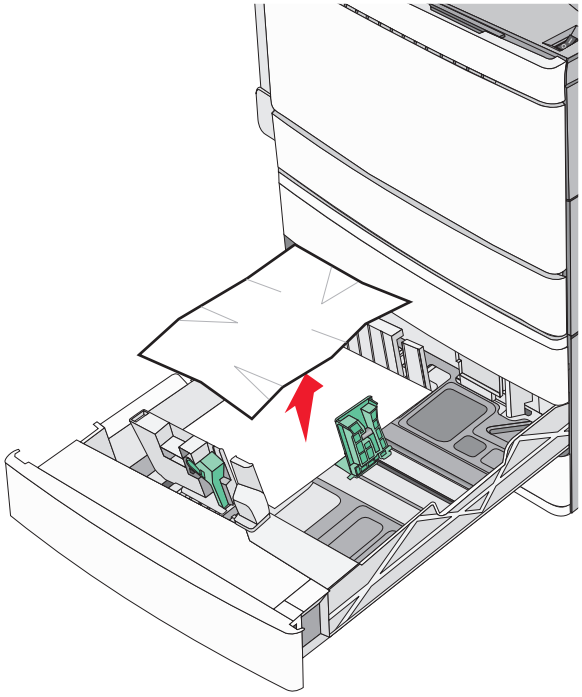

Note: Make sure all paper fragments are removed.

4 Close the tray.

5 If necessary, touch **Continue, jam cleared** from the printer control panel.

250 paper jam

1 Remove any jammed pages from the multipurpose feeder.

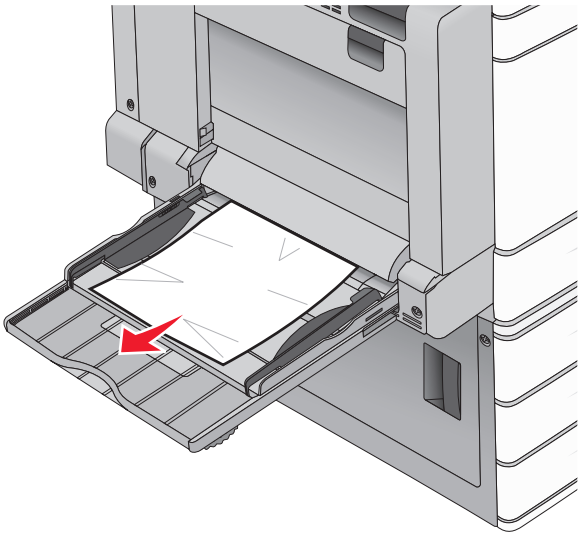

2 Load paper into the multipurpose feeder.

3 If necessary, touch **Continue, jam cleared** from the printer control panel.

281 paper jam

Paper jam in door A

1 Open door A.

CAUTION—HOT SURFACE: The inside of the printer might be hot. To reduce the risk of injury from a hot component, allow the surface to cool before touching.

2 Determine where the jam is located, and then remove it:

a If the paper is visible under the fuser, then firmly grasp it on each side and pull it out.

Note: Make sure all paper fragments are removed.

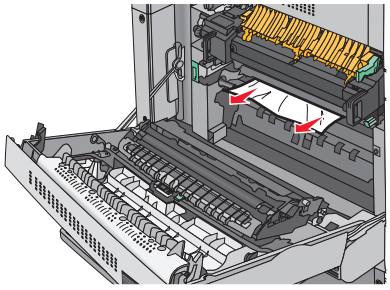

b If the paper is not visible, then you will need to remove the fuser unit.

Warning—Potential Damage: Do not touch the center of the fuser unit. Doing so will damage the fuser.

1 Remove the thumbscrew from each side of the fuser unit by rotating them counterclockwise.
2 Lift the handles on each side of the fuser, and then pull to remove the fuser unit.

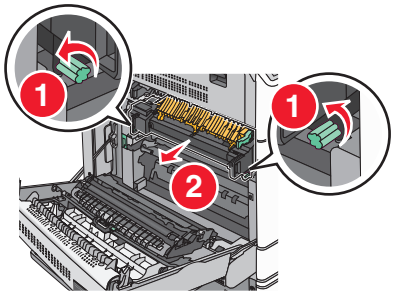

3 Firmly grasp the jammed paper on each side, and then gently pull it down and out.

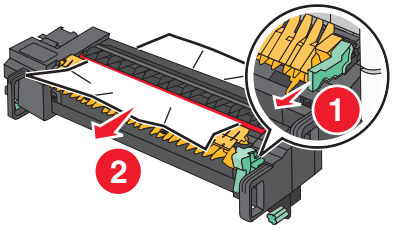

Notes:

- Make sure all paper fragments are removed.
- If the paper is in the fuser, then lower the fuser nip release lever and switch it to envelope mode.
- After removing the jammed paper, return the lever to the proper position.

4 Align the fuser unit using the handles on each side, and then place it back into the printer.

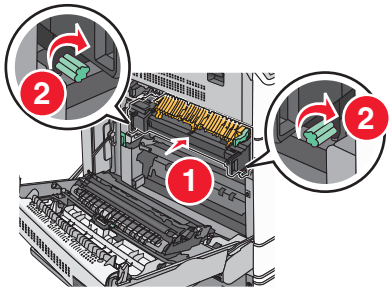

3 Close door A.

4 If necessary, touch **Continue** from the printer control panel.

Paper jam in cover F (paper transport)

1 Open cover F.

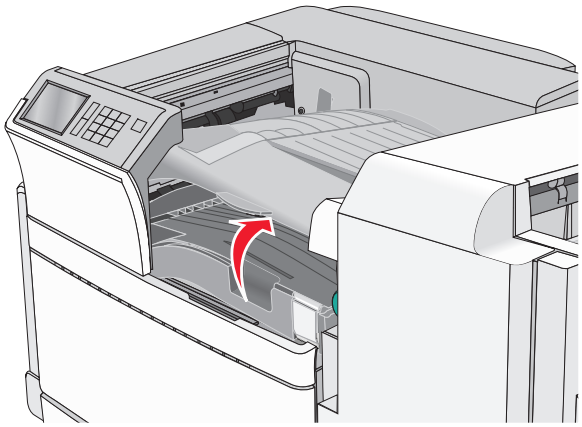

2 Firmly grasp the jammed paper on each side, and then gently pull it out.

Note: Make sure all paper fragments are removed.

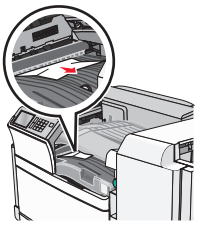

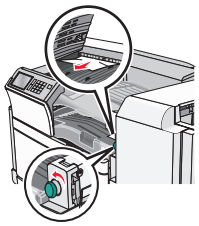

Note: If the paper jam on the right is difficult to remove, then rotate the knob counterclockwise.

3 Close cover F.

4 If necessary, touch **Continue** from the printer control panel.

4yy.xx paper jams

Paper jam in door H

1 Open door H.

Note: Door H is located between the finisher exit bins.

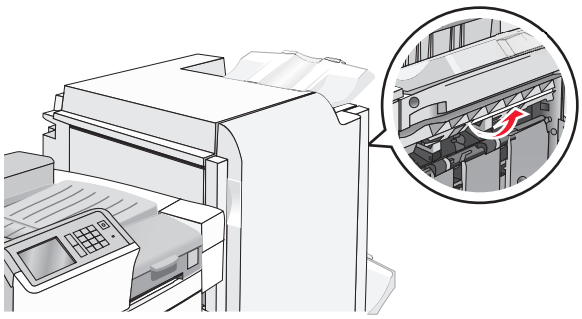

2 Firmly grasp the jammed paper on each side, and then gently pull it out.

Note: Make sure all paper fragments are removed.

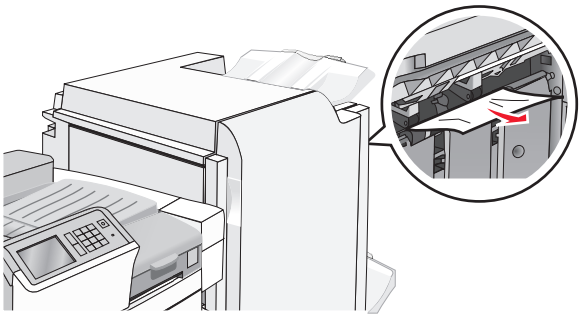

3 Close door H.

4 If necessary, touch **Continue** from the printer control panel.

Paper jam in door G

1 Open door G.

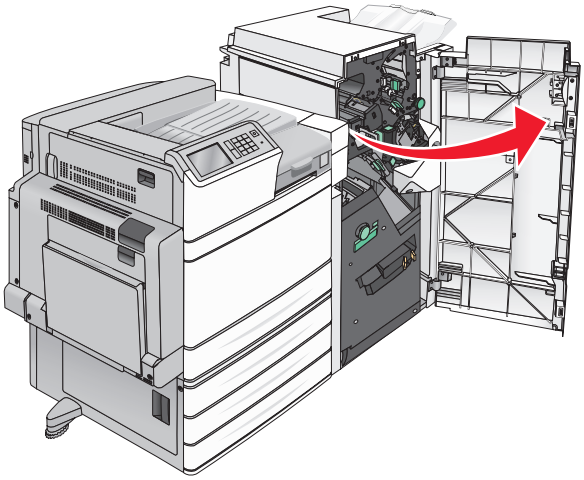

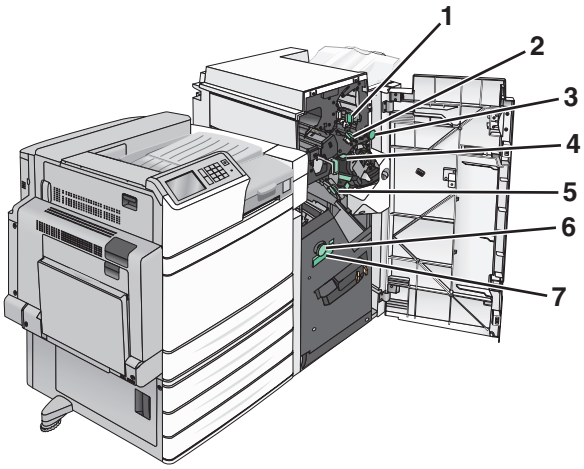

Area	Cover, knob, or handle name
1	Cover G1
2	Cover G2
3	Knob G3
4	Cover G4
5	Cover G7
6	Knob G8
7	Handle G9

2 Lift cover G1 lever .

3 Firmly grasp any jammed paper, and then gently pull it out.

Note: Make sure to remove all paper fragments after gently pulling out any jammed paper inside door G.

4 Move cover G2 to the right, and then remove any jammed paper.

Note: If the paper is jammed in the rollers, then rotate knob G3 counterclockwise.

5 Move cover G4 down, and then remove any jammed paper.

6 Move cover G7 to the left, and then remove any jammed paper.

7 Pull handle G9 until the tray is completely open.

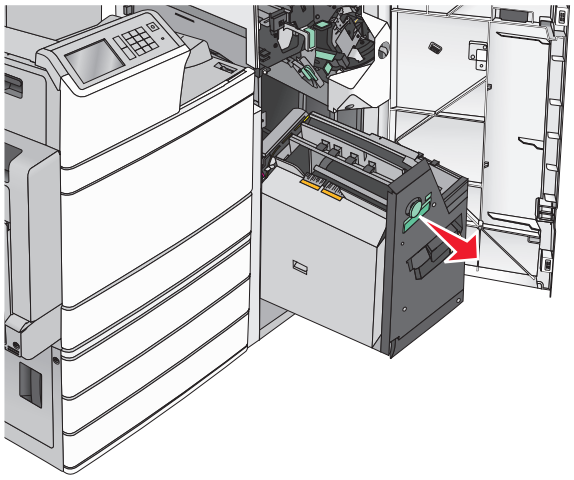

8 Lift the inside cover. If the paper is jammed in the rollers, then rotate knob G8 counterclockwise, and then remove the jammed paper.

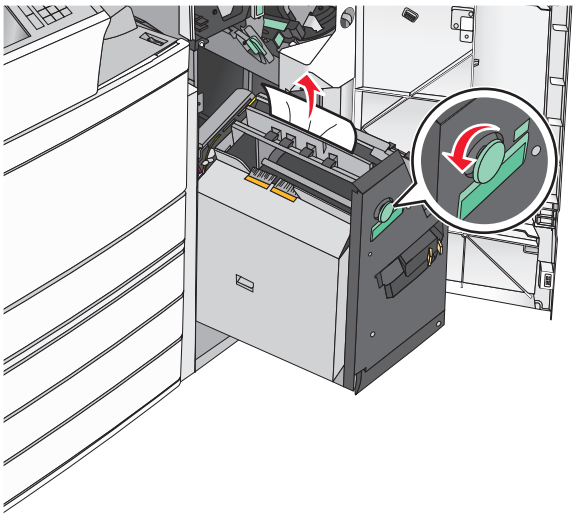

9 Close door G.

10 If necessary, touch **Continue** from the printer control panel.

Paper jam in cover F (paper transport)

1 Open cover F.

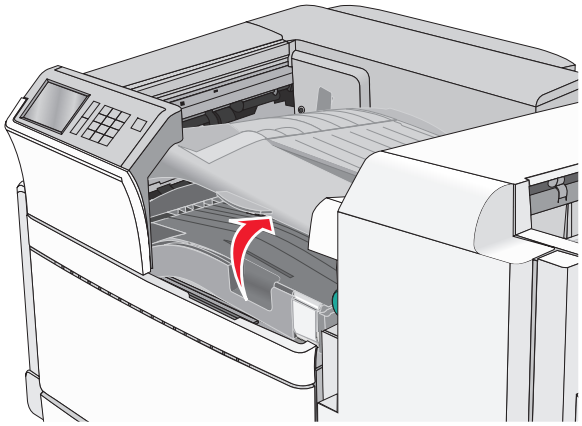

2 Firmly grasp the jammed paper on each side, and then gently pull it out.

Note: Make sure all paper fragments are removed.

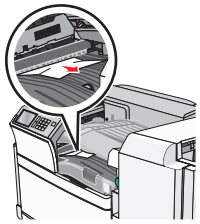

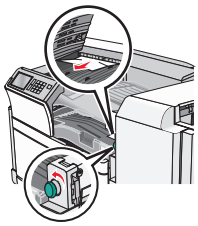

Note: If the paper jam on the right is difficult to remove, then rotate the knob counterclockwise.

3 Close cover F.

4 If necessary, touch **Continue** from the printer control panel.

455 staple jam

1 Open door G.

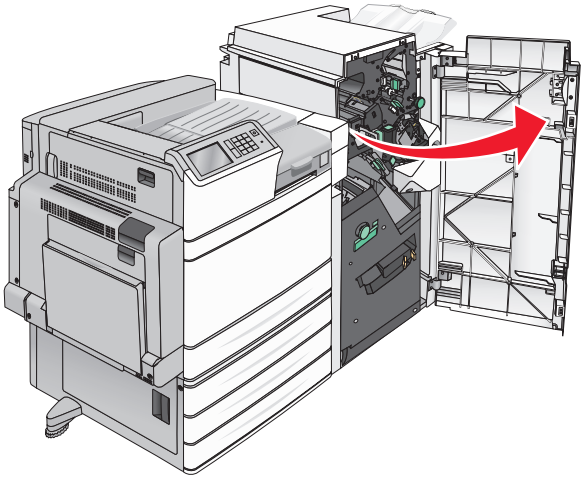

2 Press the latch to open the stapler door.

Note: The stapler door is located behind the finisher.

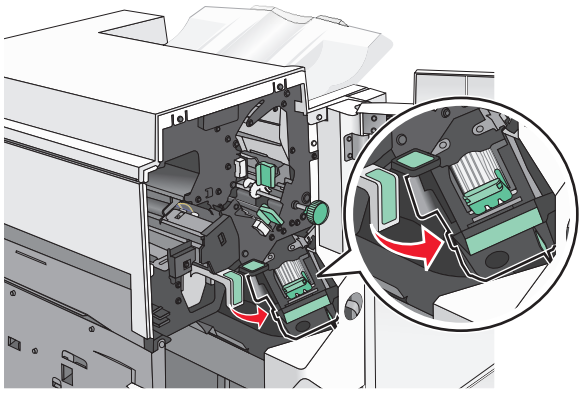

3 Lower the latch of the staple cartridge holder, and then pull the staple cartridge holder out of the printer.

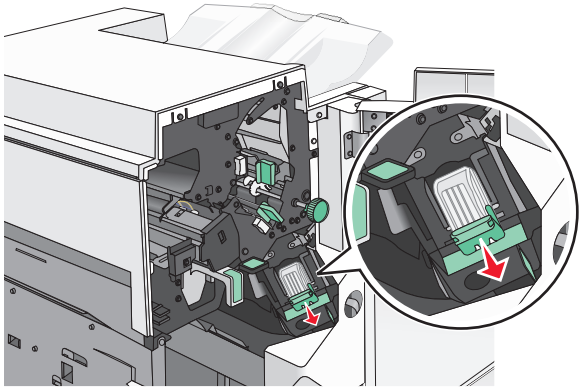

4 Use the metal tab to lift the staple guard, and then remove any jammed or loose staples.

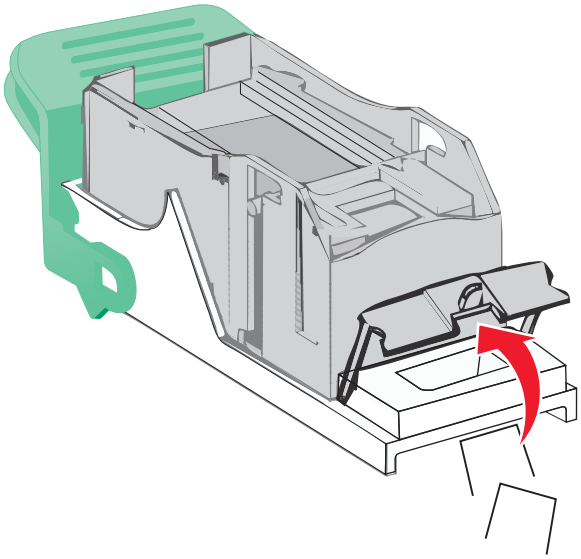

5 Close the staple guard.

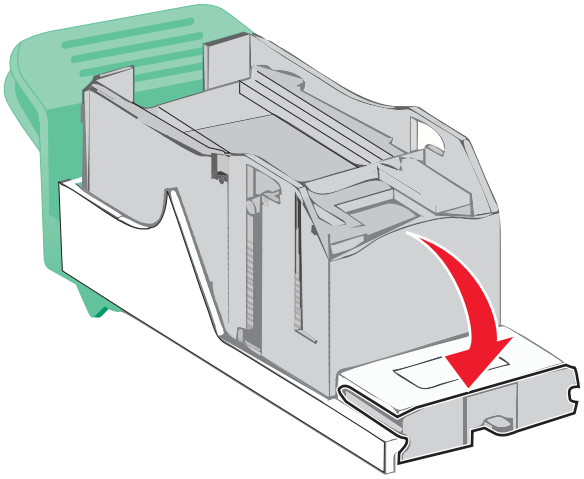

6 Press down on the staple guard until it *clicks* into place.

7 Push the staple cartridge holder firmly back into the stapler unit until the staple cartridge holder *clicks* into place.

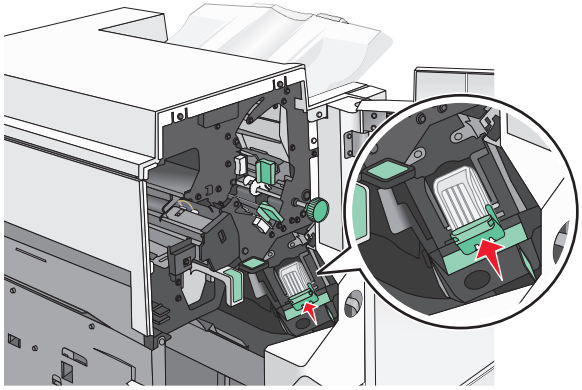

8 Close the stapler door.

9 Close door G.

10 If necessary, touch **Continue, jam cleared** from the printer control panel.

Troubleshooting

Checking an unresponsive printer

If your printer is not responding, make sure:

- The power cord is plugged into the printer and a properly grounded electrical outlet.
- The electrical outlet is not turned off by any switch or breaker.
- The printer is not plugged into any surge protectors, uninterrupted power supplies, or extension cords.
- Other electrical equipment plugged into the outlet is working.
- The printer is turned on.
- The printer cable is securely attached to the printer and the host computer, print server, option, or other network device.

Once you have checked each of these possibilities, turn the printer off and then back on. This often fixes the problem.

Understanding printer messages

An error has occured with the Flash Drive. Please remove and re-insert the drive.

Try one or more of the following:

- Remove and reinsert the flash drive.
- If the error message remains, the flash memory may be defective and require replacing.

Change [paper source] to [custom type name]

Try one or more of the following:

- Touch **Use current [paper source]** to ignore the message and print from the selected tray.
- Load the correct paper size and type in the tray, verify the paper size and type settings are specified in the printer control panel Paper menu, and then touch **Paper changed, continue**.
- Touch **Cancel job** to cancel the print job.

Change [paper source] to [custom type name] load [orientation]

Try one or more of the following

- Touch **Use current [paper source]** to ignore the message and print from the selected tray.
- Load the correct paper size and type in the tray, verify the paper size and type settings are specified in the printer control panel Paper menu, and then touch **Paper changed, continue**.
- Touch **Cancel job** to cancel the print job.

Change [paper source] to [custom string]

Try one or more of the following:

- Touch **Use current [paper source]** to ignore the message and print from the selected tray.
- Load the correct paper size and type in the tray, verify the paper size and type settings are specified in the printer control panel Paper menu, and then touch **Paper changed, continue**.
- Touch **Cancel job** to cancel the print job.

Change [paper source] to [custom string] load [orientation]

Try one or more of the following:

- Touch **Use current [paper source]** to ignore the message and print from the selected tray.
- Load the correct paper size and type in the tray, verify the paper size and type settings are specified in the printer control panel Paper menu, and then touch **Paper changed, continue**.
- Touch **Cancel job** to cancel the print job.

Change [paper source] to [paper size]

Try one or more of the following:

- Touch **Use current [paper source]** to ignore the message and print from the selected tray.
- Load the correct paper size and type in the tray, verify the paper size and type settings are specified in the printer control panel Paper menu, and then touch **Paper changed, continue**.
- Touch **Cancel job** to cancel the print job.

Change [paper source] to [paper size] load [orientation]

Try one or more of the following:

- Touch **Use current [paper source]** to ignore the message and print from the selected tray.
- Load the correct paper size and type in the tray, verify the paper size and type settings are specified in the printer control panel Paper menu, and then touch **Paper changed, continue**.
- Touch **Cancel job** to cancel the print job.

Change [paper source] to [paper size] [paper type]

Try one or more of the following:

- Touch **Use current [paper source]** to ignore the message and print from the selected tray.
- Load the correct paper size and type in the tray, verify the paper size and type settings are specified in the printer control panel Paper menu, and then touch **Paper changed, continue**.
- Touch **Cancel job** to cancel the print job.

Change [paper source] to [paper size] [paper type] load [orientation]

Try one or more of the following:

- Touch **Use current [paper source]** to ignore the message and print from the selected tray.
- Load the correct paper size and type in the tray, verify the paper size and type settings are specified in the printer control panel Paper menu, and then touch **Paper changed, continue**.
- Touch **Cancel job** to cancel the print job.

Check [src] orientation or guides

Try one or more of the following:

- Move the paper guides in the tray to the correct positions for the paper size loaded.
- Make sure the paper size setting matches the paper loaded in the tray:
  1. From the printer control panel Paper menu, check the Paper Size setting.
  2. Before sending the print job, specify the correct size setting:
     - For Windows users, specify the paper size from Print Properties.
     - For Macintosh users, specify the paper size from the Page Setup dialog.

Close cover [x]

Close the specified cover to clear the message.

Close door [x]

Close the specified door.

Disk corrupted

The printer attempted a hard disk recovery on a corrupted hard disk, and the hard disk cannot be repaired. The hard disk must be reformatted.

Touch **Format disk** to reformat the printer hard disk and clear the message.

Note: Formatting deletes all the files stored on the printer hard disk.

Empty the hole punch box

1. Empty the hole punch box.

   For instructions on emptying the hole punch box, from the printer control panel touch **More Information**.

2. Reinsert the hole punch box into the finisher, and then touch **Continue** to clear the message.

Error reading USB drive. Remove USB.

An unsupported USB device has been inserted. Remove the USB device, and then install a supported one.

Error reading USB hub. Remove hub.

An unsupported USB hub has been inserted. Remove the USB hub, and then install a supported one.

Insert staple cartridge

Try one or more of the following:

- Insert a staple cartridge.
- Touch **Continue** to clear the message and print without using the staple finisher.

Insert the hole punch box

Insert the hole punch box into the finisher, and then touch **Continue** to clear the message.

Insert Tray [x]

Insert the specified tray into the printer.

Install bin [x]

Try one or more of the following:

- Install the specified bin:
  1. Turn the printer off.
  2. Unplug the power cord from the wall outlet.
  3. Install the specified bin.
  4. Connect the power cord to a properly grounded electrical outlet.
  5. Turn the printer back on.
- Cancel the print job.

Load [src] with [custom type name]

Try one or more of the following:

- Load the specified paper in the tray or feeder.
- Touch **Paper loaded, continue** to clear the message and continue printing.

  If the printer finds a tray that has the correct paper type and size, it feeds from that tray. If the printer cannot find a tray with the correct paper type and size, it prints from the default paper source.
- Cancel the print job.

Load [src] with [custom string]

Try one or more of the following:

- Load the specified paper in the tray or feeder.
- Touch **Paper loaded, continue** to clear the message and continue printing.

  If the printer finds a tray that has the correct paper type and size, it feeds from that tray. If the printer cannot find a tray with the correct paper type and size, it prints from the default paper source.
- Cancel the print job.

Load [src] with [size]

Try one or more of the following:

- Load the specified paper in the tray or feeder.
- Touch **Paper loaded, continue** to clear the message and continue printing.

  If the printer finds a tray that has the correct paper type and size, it feeds from that tray. If the printer cannot find a tray with the correct paper type and size, it feeds from the default paper source.
- Cancel the print job.

Load [src] with [type] [size]

Try one or more of the following:

- Load the specified paper in the tray or feeder.
- Touch **Paper loaded, continue** to clear the message and continue printing.

  If the printer finds a tray that has the correct paper type and size, it feeds from that tray. If the printer cannot find a tray with the correct paper type and size, it feeds from the default paper source.
- Cancel the print job.

Load Manual Feeder with [custom type name]

Try one or more of the following:

- Load the specified paper in the manual feeder.
- Touch **Prompt each page, paper loaded** or **Do not prompt, paper loaded** to clear the message and continue printing.
- Touch **Automatically select paper** to use the paper loaded in the tray.
- Cancel the print job.

Load Manual Feeder with [custom string]

Try one or more of the following:

- Load the specified paper in the manual feeder.
- Touch **Prompt each page, paper loaded** or **Do not prompt, paper loaded** to clear the message and continue printing.
- Touch **Automatically select paper** to use the paper loaded in the tray.
- Cancel the print job.

Load Manual Feeder with [paper size]

Try one or more of the following:

- Load the specified paper in the manual feeder.
- Touch **Prompt each page, paper loaded** or **Do not prompt, paper loaded** to clear the message and continue printing.
- Touch **Automatically select paper** to use the paper loaded in the tray.
- Cancel the print job.

Load Manual Feeder with [paper type] [paper size]

Try one or more of the following:

- Load the specified paper in the manual feeder.
- Touch **Prompt each page, paper loaded** or **Do not prompt, paper loaded** to clear the message and continue printing.
- Touch **Automatically select paper** to use the paper loaded in the tray.
- Cancel the print job.

Manual feeder expects [paper size]. Check [paper source] guides

Try one or more of the following:

- Load the specified paper size in the manual feeder.
- Physically adjust [paper source] guides to a recognized paper size.
- Touch **Continue** to clear the message and continue printing.

  If the printer finds a tray that has the correct paper type and size, then it feeds from that tray. If the printer cannot find a tray with the correct paper type and size, then it prints from the default source.

Load staples

Try one or more of the following:

- Replace the specified staple cartridge in the finisher.
- Touch **Continue** to clear the message and continue printing.

  Note: The print job will be stapled if the staple cartridge is replaced or inserted.
- Touch **Cancel job** to cancel the print job.

Remove paper from standard output bin

Remove the stack of paper from the standard exit bin.

Remove paper from bin [x]

Remove the paper from the specified bin. The printer automatically senses paper removal and resumes printing.

If removing the paper does not clear the message, then touch **Continue**.

Remove paper from all bins

Remove the paper from all of the bins. The printer automatically senses paper removal and resumes printing.

If removing the paper does not clear the message, then touch **Continue**.

Remove paper from [linked bin set name]

Remove the paper from the specified bin. The printer automatically senses paper removal and resumes printing.

If removing the paper does not clear the message, then touch **Continue**.

Print quota exceeded. Print job canceled.

The print job has been cancelled because the print quota has been exceeded. Contact your system support person.

Print quota exceeded. Print job incomplete.

The print job did not complete because the print quota has been exceeded. Contact your system support person.

Restore held jobs?

Try one or more of the following:

- Touch **Restore** to restore all held jobs stored on the printer hard disk.
- Touch **Do not restore** if you do not want any print jobs to be restored.

Remove packaging material, [area name]

Remove any remaining packaging material from the specified location.

Some held jobs were not restored

Touch **Continue** to delete the specified job.

Note: Held jobs that are not restored stay on the hard disk and are inaccessible.

Unsupported camera mode, unplug camera and change mode

The camera mode does not support PictBridge.

Unplug the camera, change the mode and plug the camera back into the printer.

Unsupported disk

An unsupported disk has been inserted. Remove the unsupported disk, and then install a supported one.

31.xx Missing or defective [color] cartridge

Try one or more of the following:

1. Remove and reinstall the specified print cartridge.

   For instructions on removing a print cartridge, touch **More Information**.

2. Touch **Continue** to clear the message.

   Note: If the message is not cleared, then replace the defective print cartridge.

32.xx [color] cartridge part number unsupported by device

Remove the unsupported toner cartridge, and then install a supported one.

34 Incorrect paper size, check [paper source]

Try one or more of the following:

- Load the appropriate paper or specialty media in the proper tray.
- Confirm that the wheel on Tray 1 is set to the paper size loaded in the tray. Make sure the paper size matches the document you are trying to print.
- Touch **Continue** to clear the message and print using a different tray.
- Check the tray length and width guides and make sure the paper is loaded properly in the tray.
- Make sure the correct paper size and type are specified on the Print Properties or Print dialog settings.
- Check that the paper size is correctly set. For example, if the MP Feeder Size is set to Universal, make sure the paper is large enough for the data being printed.
- Cancel the print job.

34 Incorrect paper type, check [paper source]

Try one or more of the following:

- Load the appropriate paper or specialty media in the proper tray.
- Confirm that the wheel on Tray 1 is set to the paper type loaded in the tray. Make sure the paper type matches the document you are trying to print.
- Touch **Continue** to clear the message and print using a different tray.
- Check the tray length and width guides and make sure the paper is loaded properly in the tray.
- Make sure the correct paper size and type are specified on the Print Properties or Print dialog settings.
- Check that the paper type is correctly set. For example, if the MP Feeder Type is set to Universal, then make sure the paper is large enough for the data being printed.
- Cancel the print job.

35 Insufficient memory to support Resource Save feature

Try one or more of the following:

- Touch **Continue** to disable Resource Save and continue printing.
- To enable Resource Save after receiving this message, make sure the link buffers are set to Auto, and then exit the menus to activate the link buffer changes. When **Ready** appears, enable Resource Save.
- Install additional memory.

37 Insufficient memory, some held jobs will not be restored

The printer was unable to restore some or all of the confidential or held jobs on the printer hard disk.

Touch **Continue** to clear the message.

37 Insufficient memory, some Held Jobs were deleted

The printer deleted some held jobs in order to process current jobs.

Touch **Continue** to clear the message.

37 Insufficient memory to collate job

Try one or more of the following:

- Touch **Continue** to print the portion of the job already stored and begin collating the rest of the print job.
- Cancel the current print job.

37 Insufficient memory for Flash Memory Defragment operation

Try one or more of the following:

- Touch **Continue** to stop the defragment operation and continue printing.
- Delete fonts, macros, and other data in printer memory.
- Install additional printer memory.

38 Memory full

Try one or more of the following:

- Touch **Cancel job** to clear the message.
- Install additional printer memory.

39 Complex page, some data may not have printed

Try one or more of the following:

- Touch **Continue** to clear the message and continue printing.
- Cancel the current print job.
- Install additional printer memory.

40 [color] invalid refill, change cartridge

Replace the specified cartridge to continue printing.

51 Defective flash detected

Try one or more of the following:

- Touch **Continue** to clear the message and continue printing.
- Cancel the current print job.

52 Not enough free space in flash memory for resources

Try one or more of the following:

- Touch **Continue** to clear the message and continue printing.

  Downloaded fonts and macros not previously stored in flash memory are deleted.
- Delete fonts, macros, and other data stored in flash memory.
- Upgrade to a larger capacity flash memory card.

53 Unformatted flash detected

Try one or more of the following:

- Touch **Continue** to stop the defragment operation and continue printing.
- Format the flash memory. If the error message remains, the flash memory may be defective and require replacing.

54 Serial option [x] error

Try one or more of the following:

- Check that the serial cable is properly connected and is the correct one for the serial port.
- Check that the serial interface parameters (protocol, baud, parity, and data bits) are set correctly on the printer and host computer.
- Touch **Continue** to continue printing.
- Turn the printer power off and then back on to reset the printer.

54 Standard network software error

Try one or more of the following:

- Touch **Continue** to continue printing.
- Turn the printer off and then back on to reset the printer.
- Upgrade (flash) the network firmware in the printer or print server.

54 Network [x] software error

Try one or more of the following:

- Touch **Continue** to continue printing.
- Turn the printer off, wait for about 10 seconds, and then turn the printer back on.
- Upgrade (flash) the network firmware in the printer.

55 Unsupported option in slot [x]

1. Turn the printer off.
2. Unplug the power cord from the wall outlet.
3. Remove the unsupported option card from the printer system board, and then replace it with a supported card.
4. Connect the power cord to a properly grounded electrical outlet.
5. Turn the printer back on.

56 Parallel port [x] disabled

Try one or more of the following:

- Touch **Continue** to clear the message.
  The printer discards any data received through the parallel port.
- Make sure the Parallel Buffer menu item is not set to Disabled.

56 Serial port [x] disabled

Try one or more of the following:

- Touch **Continue** to clear the message.
  The printer discards any data received through the serial port.
- Make sure the Serial Buffer menu is not set to Disabled.

56 Standard USB port disabled

Try one or more of the following:

- Touch **Continue** to clear the message.
  The printer discards any data received through the USB port.
- Make sure the USB Buffer menu item is not set to Disabled.

56 Standard parallel port disabled

Try one or more of the following:

- Touch **Continue** to clear the message.
  The printer discards any data received through the parallel port.
- Make sure the Parallel Buffer menu item is not set to Disabled.

56 USB port [x] disabled

Try one or more of the following:

- Touch **Continue** to clear the message.

  The printer discards any data received through the USB port.
- Make sure the USB Buffer menu is not set to Disabled.

57 Configuration change, some held jobs were not restored

Something has changed in the printer to invalidate the held jobs. Possible changes include:

- The printer firmware has been updated.
- Paper input options needed for the print job were removed.
- The print job was created using data from a device in the USB port and the device is no longer in the USB port.
- The printer hard disk contains print jobs that were stored while installed in a different printer model.

Touch **Continue** to clear the message.

58 Too many disks installed

1. Turn the printer off.
2. Unplug the power cord from the wall outlet.
3. Remove the excess disks.
4. Connect the power cord to a properly grounded electrical outlet.
5. Turn the printer back on.

58 Too many flash options installed

1. Turn the printer off.
2. Unplug the power cord from the wall outlet.
3. Remove the excess flash memory.
4. Connect the power cord to a properly grounded outlet.
5. Turn the printer back on.

58 Too many trays attached

1. Turn the printer off.
2. Unplug the power cord from the wall outlet.
3. Remove the additional trays.
4. Connect the power cord to a properly grounded outlet.
5. Turn the printer back on.

59 Incompatible tray [x]

Try one or more of the following:

- Remove the specified tray.
- Touch **Continue** to clear the message and continue printing without using the specified tray.

61 Remove defective disk

Try one or more of the following:

- Touch **Continue** to clear the message and continue printing.
- Install a different printer hard disk before performing any operations that require a printer hard disk.

62 Disk full

Try one or more of the following:

- Touch **Continue** to clear the message and continue processing.
- Delete fonts, macros, and other data stored on the printer hard disk.
- Install a printer hard disk with larger capacity.

80 Scheduled maintenance [x]

Contact customer support, and report the message. The printer is scheduled for maintenance.

80 Replace paper pick rollers in [paper source], use parts and instructions in tray 1 compartment

Try one or more of the following:

- Touch **Continue and replace later** to ignore the message and continue printing.

  Note: Worn or defective paper pick rollers may cause paper jams.
- Replace the worn or defective paper pick rollers, and then touch **Rollers replaced** to clear the message and continue printing.

82.xx Replace waste toner bottle

1. Replace the waste toner bottle.

   For instructions on replacing the waste toner bottle, from the printer control panel touch **More Information**.
2. Touch **Continue** to clear the message and continue printing.

82.xx Waste toner bottle nearly full

Order a replacement waste toner bottle immediately.

1. Replace the waste toner bottle.

   For instructions on installing the waste toner bottle, from the printer control panel touch **More Information**.

2. Touch **Continue** to clear the message and continue printing.

82.xx Waste toner bottle missing

Reinsert the waste toner bottle into the printer.

88.xx [color] cartridge low

1. Remove the specified cartridge.

   Warning—Potential Damage: Be careful not to touch the photoconductor drum. Doing so may affect the print quality of future print jobs.

2. Firmly shake the cartridge side-to-side and front-to-back several times to redistribute the toner.

3. Reinsert the cartridge, and then touch **Continue** to clear the message and continue printing.

Notes:

- Repeat this procedure multiple times until the print remains faded. When the print remains faded, replace the cartridge.
- Have a new cartridge available when the current one no longer prints satisfactorily.

88.xx [Color] cartridge very low

The specified print cartridge is very low.

1. For instructions on replacing a print cartridge, from the printer control panel touch **More Information**.

2. Touch **Continue** to clear the message and continue printing.

88 Replace [color] cartridge

The specified print or toner cartridge is empty.

1. Replace the specified cartridge.

   For instructions on replacing cartridge, from the printer control panel, touch **More Information**.

2. Touch **Continue** to clear the message and continue printing.

1565 Emulation error, load emulation option

The printer automatically clears the message in 30 seconds, and then disables the download emulator on the firmware card.

Solving printing problems

Multiple-language PDF files do not print

The PDF files may contain unavailable fonts.

1. Open the document you want to print in Adobe Acrobat.
2. Click the printer icon > **Advanced** > **Print as image** > **OK** > **OK**.

Printer control panel display is blank or displays only diamonds

The printer self test failed. Turn the printer off, wait about 10 seconds, and then turn the printer back on.

If **`Performing Self Test`** and **`Ready`** do not appear, turn the printer off and contact Customer Support.

Error message about reading USB drive appears

Make sure the flash drive is supported.

Print jobs do not print

Try one or more of the following:

Make sure there is no problem with your printer

From the printer control panel, check the status. If necessary, follow the recovery instructions.

Make sure the printer is ready to print

Make sure **`Ready`** appears on the display before sending a print job.

Check if a supply is missing or needs replacement

Remove and then reinstall or replace the supply.

Check if the standard exit bin is full

Remove the paper stack from the standard exit bin.

Check if the paper tray is empty

Load paper in the tray.

Make sure the correct printer software is installed

- Verify that you are using the correct printer software.
- If the printer is connected to your computer through a USB port, then make sure you are running a supported operating system and using a compatible printer software.

Make sure the internal print server is working properly

- Make sure the internal print server is properly installed and that the printer is connected to the network.
- Print a network setup page and check that the status shows **Connected**. If the status is **Not Connected**, then check the network cables, and then try printing the network setup page again. Contact your system support person to make sure the network is functioning correctly.

The printer software is available on the Lexmark Web site at **http://support.lexmark.com**.

Make sure you are using a recommended USB, serial, or Ethernet cable

For more information, visit the Lexmark Web site at **http://support.lexmark.com**.

Make sure printer cables are securely connected

Check the cable connections to the printer and print server to make sure they are secure.

For more information, see the setup documentation that came with the printer.

Confidential and other held jobs do not print

These are possible solutions. Try one or more of the following:

Partial job, no job, or blank page prints

The print job may contain a formatting error or invalid data.

- Delete the print job, and then print it again.
- For PDF documents, recreate the PDF and then print it again.

If you are printing from the Internet, then the printer may be reading multiple job titles as duplicates and deleting all jobs except the first one.

- For Windows users, open Print Properties. From the Print and Hold dialog, select the "Keep duplicate documents" check box under the User name text box before entering a PIN number.
- For Macintosh users, save each print job, naming each job differently, and then send the individual jobs to the printer.

Make sure the printer has sufficient memory

Free up additional printer memory by scrolling through the list of held jobs and deleting some of them.

Print job takes longer than expected

Try one or more of the following:

Reduce the complexity of the print job

Eliminate the number and size of fonts, the number and complexity of images, and the number of pages in the print job.

Turn off the Page Protect setting

From the home screen, navigate to:

> **Settings** > **General Settings** > **Print Recovery** > **Page Protect** > **Off** >

Change the environmental settings

When using Eco-Mode or Quiet Mode settings, you may notice a reduction in performance.

Job prints from the wrong tray or on the wrong paper

Check the paper type and paper size settings

Make sure the paper type setting matches the paper loaded in the tray:

1. From the printer control panel Paper menu, check the paper type and paper size settings.
2. Before sending the job to print, specify the correct type setting:
   - For Windows users, specify the paper type from Print Properties.
   - For Macintosh users, specify the paper type from the Print dialog.

Incorrect characters print

- Make sure the printer is not in Hex Trace mode. If **Ready Hex** appears on the display, you must exit Hex Trace mode before you can print your job. Turn the printer off and back on to exit Hex Trace mode.
- Make sure the SmartSwitch settings are set to On in the Network and USB menus.

Tray linking does not work

These are possible solutions. Try one or more of the following:

Load the same size and type of paper

- Load the same size and type of paper in each tray to be linked.
- Move the paper guides to the correct positions for the paper size loaded in each tray.

Use the same Paper Size and Paper Type settings

- Print a menu settings page and compare the settings for each tray.
- If necessary, adjust the settings from the Paper Size/Type menu.

Note: The standard 550-sheet tray and the multipurpose feeder do not automatically sense the paper size. You must set the size from the Paper Size/Type menu.

Large jobs do not collate

These are possible solutions. Try one or more of the following:

Make sure Collate is set to On

From the Finishing menu or Print Properties, set Collate to On.

Note: Setting Collate to Off in the software overrides the setting in the Finishing menu.

Reduce the complexity of the print job

Reduce the complexity of the print job by eliminating the number and size of fonts, the number and complexity of images, and the number of pages in the job.

Make sure the printer has enough memory

Add printer memory or an optional hard disk.

Unexpected page breaks occur

Increase the Print Timeout value

1. From the home screen, navigate to:

   > **Settings** > **General Settings** > **Timeouts**

2. Touch the left or right arrow next to **`Print Timeout`** until the desired value appears.
3. Touch **Submit**.

Solving home screen applications problems

An application error has occurred

Check the system log for relevant details

1. Type the printer IP address or host name in the address field of your Web browser.

   If you do not know the IP address or host name of the printer, then you can:

   - View the information on the printer control panel home screen, or in the TCP/IP section under the Networks/Ports menu.
   - Print a network setup page or menu settings page, and then locate the information in the TCP/IP section.

2. Click **Settings** or **Configuration**.
3. Click **Device Solutions** > **Solutions (eSF)**, or click **Embedded Solutions**.
4. Click **System** tab > **Log**

5 From the Filter menu, select an application status.

6 From the Application menu, select an application, and then click **Submit**.

Make sure the file name you want to scan to is not already in use

Verify that the file to which you want to scan is not open by another application or user.

To help prevent errors, make sure either **Append time stamp** or **Overwrite existing file** is selected in the destination configuration settings.

Adjust the scan settings

In the destination configuration settings, lower the scan settings. For example, to lower the scan resolution, disable Color, or change the "Content type" setting to Text.

Contact customer support

If you still cannot isolate the problem, then contact customer support.

Forms and Favorites troubleshooting

Forms are not available or are not working

Make sure the bookmark pointing to the form is in the Bookmarks root folder

If the bookmark pointing to the form was created in a subfolder of the Bookmarks folder, then it will not be available under the Forms solution. Delete the bookmark and recreate it under the Bookmarks root folder.

Make sure the bookmark is pointing to the correct location

The printer does not validate bookmarks. If the URL or network location that was specified when the bookmark was created is incorrect, then the printer will not be able to access the document.

Make sure the bookmark is created with Forms and Favorites

If the bookmark is created using another application, then it cannot be accessed in Forms and Favorites.

A network destination stopped working or is invalid

Make sure the printer authentication is configured

If the application is configured to use MFP authentication credentials, then the printer authentication settings must be configured from the Embedded Web Server.

For more information on configuring the printer authentication settings, see the *Embedded Web Server Administrator's Guide* available on **www.lexmark.com**.

Make sure destination is shared and has a valid network address

Check that the folder or source file is set to be shared across the network.

If the destination has been moved, then the network address may have changed. The destination network address can be accessed from the Embedded Web Server.

Make sure the printer is connected to the network

Make sure that all appropriate network cables are securely connected and that the network settings of the printer are correctly configured. For information on networking the printer, see the *Networking Guide* on the *Software and Documentation* CD that came with the printer.

If the source file and printer reside in different domains, then make sure the domain information is specified

If the source file exists within a different domain than the printer, then you can edit the destination from the application configuration page and enter the appropriate domain information in the Network Address and Network Domain fields. If you do not know the network address of the computer where your source file resides, then consult your system support person.

You can also add the domain name to the Domain Search Order list under the printer network setup.

Check the system log for relevant details

1. Type the printer IP address or host name in the address field of your Web browser.

   If you do not know the IP address or host name of the printer, then you can:

   - View the information on the printer control panel home screen, or in the TCP/IP section under the Networks/Ports menu.
   - Print a network setup page or menu settings page and locate the information in the TCP/IP section.
2. Click **Settings** or **Configuration**.
3. Click **Device Solutions** > **Solutions (eSF)**, or click **Embedded Solutions**.
4. Click **System** tab > **Log**.
5. From the Filter menu, select an application status.
6. From the Application menu, select an application, and then click **Submit**.

Solving option problems

Option does not operate correctly or quits after it is installed

Try one or more of the following:

Reset the printer

Turn the printer off, wait for about 10 seconds, and then turn the printer on.

Check to see if the option is connected to the printer

1. Turn the printer off using the power switch.
2. Unplug the power cord from the wall outlet, and then from the printer.
3. Check the connection between the option and the printer.

Make sure the option is installed correctly

Print a menu settings page and check to see if the option is listed in the Installed Options list. If the option is not listed, then reinstall it. For more information, see the hardware setup documentation that came with the option, or go to **www.lexmark.com** to view the option instruction sheet.

Make sure the option is selected

From the computer you are printing from, select the option.

For more information, see “Updating available options in the printer driver” on page 48.

Paper tray problems

Try one or more of the following:

Make sure the paper is loaded correctly

1. Open the paper tray.
2. Check for paper jams or misfeeds.
3. Make sure the paper guides are aligned against the edges of the paper.
4. Make sure the paper tray closes properly.

Reset the printer

Turn the printer off, wait about 10 seconds, and then turn the printer on.

Make sure the paper tray is installed correctly

If the paper tray is listed on the menu settings page, but paper jams when it enters or exits the tray, then it may not be properly installed. Reinstall the paper tray. For more information, see the hardware setup documentation that came with the paper tray, or go to **http://support.lexmark.com** to view the paper tray instruction sheet.

2,000-sheet drawer problems

Check the drawer connection

Make sure the 2,000-sheet drawer is properly connected to the printer.

Load paper

If the tray is empty, then load paper in the tray or feeder

Clear any jams

Open the side door of the tray or feeder, and then remove any jammed paper.

Avoid paper jams

- Flex the paper.
- Make sure the drawer is properly installed.
- Make sure paper is loaded correctly.
- Make sure the paper stack you load does not exceed the maximum stack height indicated in the tray.
- Make sure the paper or specialty media meets specifications and is not damaged.
- Make sure the guides are positioned correctly for the paper size loaded.

Memory card

Make sure the memory card is securely connected to the printer system board.

Cannot detect flash memory card

Make sure the flash memory card is securely connected to the printer system board.

Cannot detect printer hard disk

Make sure the printer hard disk is securely connected to the printer system board.

Internal Solutions Port does not operate correctly

Try one or more of the following:

Check the Internal Solutions Port (ISP) connections

Make sure the ISP is securely connected to the printer system board.

Check the cable

Make sure you are using the correct cable and that it is securely connected to the Internal Solutions (ISP) port.

Make sure the network software is configured correctly

For information on installing the network printing software, see the *Networking Guide* on the *Software and Documentation* CD.

Internal print server does not operate correctly

Try one or more of the following:

Check the print server connections

- Make sure the internal print server is attached securely to the printer system board.
- Make sure you are using the correct cable and that it is securely connected.

Make sure the network software is configured correctly

For more information on installing the network printing software, do the following:

1. Open the *Software and Documentation* CD.
2. Click **Additional**.
3. Under Publications on this CD, select **Networking Guide**.

USB/parallel interface card does not operate correctly

Check the USB/parallel interface card connection

Make sure the USB/parallel interface card is securely connected to the printer system board.

Check the cable

Make sure you are using the correct cable and that it is securely connected.

Solving paper feed problems

Paper frequently jams

These are possible solutions. Try one or more of the following:

Check the paper

Use recommended paper and specialty media. For more information, see the chapter about paper and specialty media guidelines.

Make sure there is not too much paper in the paper tray

Make sure the stack of paper you load does not exceed the maximum stack height indicated in the tray or on the multipurpose feeder.

Check the paper guides

Move the guides in the tray to the correct positions for the paper size loaded.

The paper may have absorbed moisture due to high humidity

- Load paper from a fresh package.
- Store paper in its original wrapper until you use it.

Paper jam message remains after jam is cleared

Check the paper path

The paper path is not clear. Clear jammed paper from the entire paper path, and then touch **Continue**.

Jammed pages are not reprinted

Turn on Jam Recovery

1. From the home screen, navigate to:

   > **Settings** > **General Settings** > **Print Recovery**

2. Touch the arrows next to **Jam Recovery** until **On** or **Auto** appears.
3. Touch .

Solving print quality problems

If the solutions here do not correct the problem, contact customer support. You may have a printer part that requires adjustment or replacement.

Printer is printing blank pages

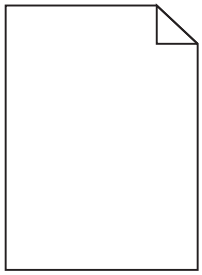

Try one or more of the following:

Make sure there is no packing material left on the toner or print cartridge

Remove the cartridge and make sure the packing material is properly removed. Reinstall the cartridge.

Make sure the toner or print cartridge is not low on toner

When **88.xx [color] cartridge low** appears, make sure that toner is distributed evenly among all four cartridges:

1. Remove the cartridge.

   Warning—Potential Damage: Be careful not to touch the photoconductor drum. Doing so may affect the print quality of future print jobs.

2. Firmly shake the cartridge side-to-side and front-to-back several times to redistribute the toner.

3 Reinsert the cartridge.

Note: If print quality does not improve, then replace the cartridge of the color that is not printing.

If the problem continues, then the printer may need to be serviced. For more information, contact customer support.

Characters have jagged or uneven edges

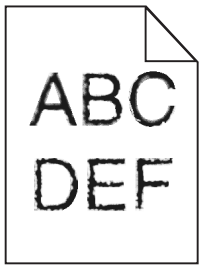

If you are using downloaded fonts, verify that the fonts are supported by the printer, the host computer, and the software program.

Clipped images

Try one or more of the following:

Check the guides

Move the width and length guides in the tray to the correct positions for the paper size loaded.

Check the paper size setting

Make sure the paper size setting matches the paper loaded in the tray:

1 From the printer control panel Paper menu, check the Paper Size setting.

2 Before sending the job to print, specify the correct size setting:

- For Windows users, specify the size from Print Properties.
- For Macintosh users, specify the size from the Page Setup dialog.

Fine horizontal lines appear on color pages

You may notice fine, horizontal lines in photographs or pages with a high concentration of color. This can occur when the printer is in Quiet Mode. To fix this, set Quiet Mode to **Off (Image/Photo)**.

Shadow images appear on prints

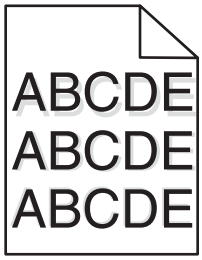

Check the paper type and weight settings

Make sure the paper type and weight settings match the paper loaded in the tray:

1. From the printer control panel Paper menu, check the Paper Type and Paper Weight settings.
2. Before sending the job to print, specify the correct type setting:
   - For Windows users, specify the type from Print Properties.
   - For Macintosh users, specify the type from the Print dialog.

Make sure the photoconductor unit is not defective

Replace the defective photoconductor unit.

Make sure the toner cartridge is not low on toner

When **`88.xx [color] cartridge low`** appears, make sure the toner is distributed evenly within the toner cartridge.

1. Remove the toner cartridge.

   Warning—Potential Damage: Be careful not to touch the photoconductor drum. Doing so may affect the print quality of future print jobs.

2. Firmly shake the cartridge side-to-side and front-to-back several times to redistribute the toner.
3. Reinsert the toner cartridge.

Note: If print quality does not improve, replace the toner cartridge.

If the problem continues, the printer may need to be serviced. For more information, contact customer support.

Gray background on prints

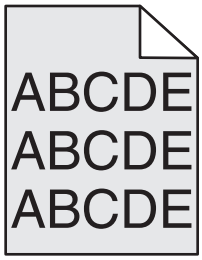

Check the background darkness or removal setting

Try one or more of the following:

- Adjust the darkness to a lighter setting.
- Increase the background removal setting.

Make sure there is no worn or defective print cartridge

Replace the worn or defective print cartridge.

Incorrect margins

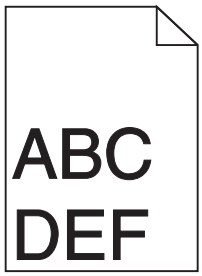

These are possible solutions. Try one or more of the following:

Check the paper guides

Move the guides in the tray to the correct positions for the paper size loaded.

Check the paper size setting

Make sure the paper size setting matches the paper loaded in the tray:

1. From the printer control panel Paper menu, check the Paper Size setting.
2. Before sending the job to print, specify the correct size setting:
   - For Windows users, specify the size from Print Properties.
   - For Macintosh users, specify the size from the Page Setup dialog.

Light colored line, white line, or incorrectly colored line appears on prints

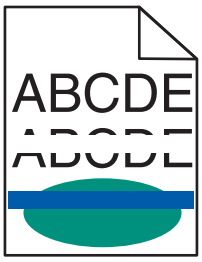

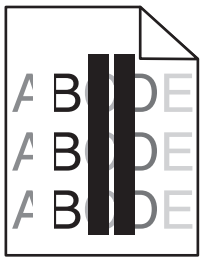

Try one or more of the following:

Make sure there is no defective toner cartridge

Replace the defective toner cartridge.

Make sure the photoconductor unit is not defective

Replace the defective photoconductor unit.

Make sure the transfer module is not defective

Replace the defective transfer module.

Clean the printhead lenses

1. Open the front door, and then the internal cover.
2. Locate the printhead wipers.
3. Gently pull the printhead wiper out until it stops, and then slowly slide it back into place.
4. Clean the remaining three printhead lenses.

Paper curl

Try one or more of the following:

Check the paper type and weight settings

Make sure the paper type and weight settings match the paper loaded in the tray or feeder:

1. From the printer control panel Paper menu, check the Paper Type and Paper Weight settings.
2. Before sending the print job, specify the correct paper type setting:
   - For Windows users, specify the paper type from Print Properties.
   - For Macintosh users, specify the paper type from the Print dialog.

Load paper from a fresh package

Paper absorbs moisture due to high humidity. Store paper in its original wrapper until you use it.

Print irregularities

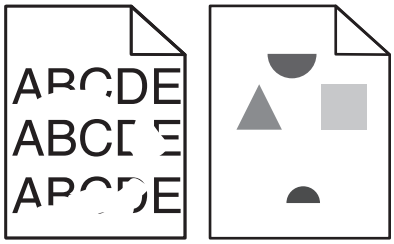

Try one or more of the following:

Load paper from a fresh package

The paper may have absorbed moisture due to high humidity. Store paper in its original wrapper until you use it.

Check the paper type and weight settings

Make sure the paper type and weight settings match the paper loaded in the tray or feeder:

1. From the printer control panel Paper menu, check the Paper Type and Paper Weight settings.
2. Before sending the print job, specify the correct paper type setting:
   - For Windows users, specify the paper type from Print Properties.
   - For Macintosh users, specify the paper type from the Print dialog.

Avoid textured paper with rough finishes

Make sure there is no defective print cartridge

Replace the worn or defective print cartridge.

Make sure the transfer belt is not defective

Replace the defective transfer belt. For more information, see the instruction sheet that came with the replacement part.

Make sure the fuser is not defective

Replace the defective fuser. For more information, see the instruction sheet that came with the replacement part.

Print is too dark

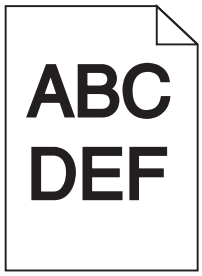

Try one or more of the following:

Check the darkness, brightness, and contrast settings

The Toner Darkness setting may be too dark, the Brightness setting may be too dark, or the Contrast setting may be too high.

- Change these settings from the printer control panel Quality menu.
- For Windows users, change these settings from Print Properties.

- For Macintosh users:
  1. Choose **File** > **Print**.
  2. From the “Orientation pictures” menu, choose **Printer Features**.
  3. Choose a lower value for the Toner Darkness, Brightness, and Contrast settings.

Load paper from a fresh package

The paper may have absorbed moisture due to high humidity. Store paper in its original wrapper until you use it.

Avoid textured paper with rough finishes

Check the Paper Type setting

Make sure the paper type setting matches the paper loaded in the tray or feeder:

- From the printer control panel Paper menu, check the Paper Type setting.
- For Windows users, check this setting from Print Properties.
- For Macintosh users, check this setting from the Print dialog.

Print is too light

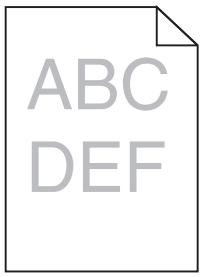

Try one or more of the following:

Check the darkness, brightness, and contrast settings

The Toner Darkness setting may be too light, the Brightness setting may be too light, or the Contrast setting may be too low.

- Change these settings from the printer control panel Quality menu.
- For Windows users, change these settings from Print Properties
- For Macintosh users:
  1. Choose **File** > **Print**.
  2. From the Orientation pictures drop-down menu, choose **Printer Features**.
  3. Choose a higher value for the Toner Darkness, Brightness, and Contrast settings.

Load paper from a fresh package

The paper may have absorbed moisture from high humidity. Store paper in its original wrapper until you use it.

Avoid textured paper with rough finishes

Check the Paper Type setting

Make sure the Paper Type setting matches the paper loaded in the tray or feeder:

- From the printer control panel Paper menu, check the Paper Type setting.
- For Windows users, check this setting from Print Properties.
- For Macintosh users, check this setting from the Print dialog.

Repeating defects appear on a page

Try one or more of the following:

Make sure the photoconductor unit is not defective

The photoconductor unit may be defective if marks occur repeatedly in only one color and multiple times on a page.

- Replace the photoconductor unit if the defects occur every 94.2 mm (3.71 in.) or 37.68 mm (1.48 in.).

Make sure the fuser is not defective

The fuser may be defective if the marks occur down repeatedly in all colors.

- Replace the fuser if the defects occur every 141 mm (5.55 in.).

Skewed print

Try one or more of the following:

Check the paper guides

Adjust the length and width guides in the tray to the correct positions for the paper size loaded.

- Make sure the guides are not too far from the paper stack.
- Make sure the guides are not pressing too lightly against the paper stack.

Check the paper

Make sure you are using paper that meets the printer specifications.

Make sure the printer is clean or is not contaminated with paper dust

Clean the exterior of the printer

1. Make sure that the printer is turned off and unplugged from the wall outlet.

   Warning—Potential Damage: To avoid the risk of electric shock when cleaning the exterior of the printer, unplug the power cord from the wall outlet and disconnect all cables to the printer before proceeding.

2. Remove paper from the standard exit bin.

3 Dampen a clean, lint-free cloth with water.

Warning—Potential Damage: Do not use household cleaners or detergents, as they may damage the finish of the printer.

4 Wipe only the exterior of the printer, making sure to include the standard exit bin.

Warning—Potential Damage: Using a damp cloth to clean the interior may cause damage to your printer.

5 Make sure the paper support and standard exit bin are dry before beginning a new print job.

Make sure the paper feed rollers are clean and are not contaminated with dust

1 Turn the printer off using the power switch, and then unplug the power cord from the wall outlet.

2 Remove the paper feed rollers.

Note: For instructions on how to remove and reinstall the paper feed rollers, see the setup sheet that came with the rollers inside the compartment box of Tray 1.

3 Dampen a clean, lint-free cloth with water.

4 Clean the paper feed rollers.

Warning—Potential Damage: Do not touch the rubber. Doing so will damage the rollers.

5 Reinstall the paper feed rollers.

Note: Make sure to replace the worn or defective paper feed rollers.

Solid color pages

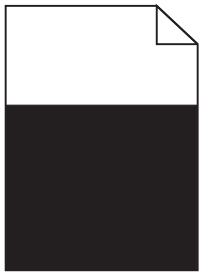

Make sure the photoconductor is not defective and is installed correctly

Remove and then reinstall the photoconductor. If the problem continues, then the photoconductor may need to be replaced.

Black or white streaks appear on transparencies or paper

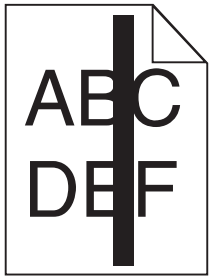

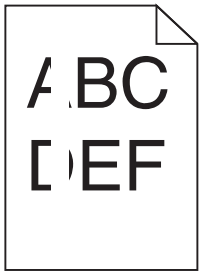

Try one or more of the following:

Ensure that the fill pattern is correct

If the fill pattern is incorrect, choose a different fill pattern from your software program.

Check the paper type

- Use only the recommended transparencies.
- Ensure that the Paper Type setting matches what is loaded in the tray or feeder.
- Ensure that the Paper Texture setting is correct for the type of paper or specialty media loaded in the tray or feeder.

Make sure the print cartridge is not low on toner

When **88.xx [color] cartridge low** appears, make sure the toner is distributed evenly within the print cartridge:

1. Remove the print cartridge.

   Warning—Potential Damage: Be careful not to touch the photoconductor drum. Doing so may affect the print quality of future print jobs.

2. Firmly shake the cartridge side-to-side and front-to-back several times to redistribute the toner.
3. Reinsert the print cartridge.

If the problem continues, the printer may need to be serviced. For more information, contact Customer Support.

Streaked horizontal lines appear on prints

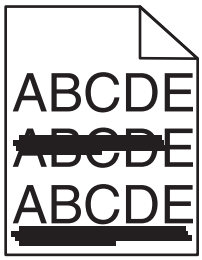

Try one or more of the following:

Select another tray or feeder

- From the printer control panel Paper Menu, select Default Source.
- For Windows users, select the paper source from Print Properties.
- For Macintosh users, select the paper source from the Print dialog and pop-up menus.

Make sure there is no worn, defective, or empty print cartridge

Replace the worn, defective, or empty print cartridge.

Toner fog or background shading appears on the page

Try one or more of the following:

Make sure the toner cartridge is installed correctly or is not defective

Reinstall or replace the defective toner cartridge.

Make sure the transfer module is not worn or defective

Replace the worn or defective transfer module.

Make sure the photoconductor unit is not worn or defective

Replace the word or defective photoconductor unit.

Make sure the fuser is not worn or defective

Replace the worn or defective fuser.

Make sure the printer has recalibrated recently

Perform color adjust from the Quality menu.

Make sure the application has not specified an off-white background

Check the application settings.

Make sure no toner is in the paper path

Contact customer support.

Toner rubs off

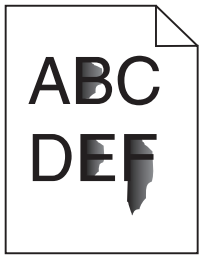

Try one or more of the following:

Check the paper type and weight settings

Make sure the paper type and weight settings match the paper loaded in the tray or feeder:

1. From the printer control panel Paper menu, check the Paper Type and Paper Weight settings. Change the Paper Weight setting from Normal to Heavy.
2. Before sending the print job, specify the correct paper type setting:
   - For Windows users, specify the paper type from Print Properties.
   - For Macintosh users, specify the paper type from the Print dialog.

Check the paper texture setting

From the printer control panel Paper menu, make sure the Paper Texture setting matches the paper loaded in the tray or feeder. If necessary, change the Paper Texture setting from Normal to Rough.

Make sure the fuser is not worn or defective

Replace the worn or defective fuser. For more information, see the instruction sheet that came with the replacement part.

Transparency print quality is poor

Try one or more of the following:

Check the transparencies

Use only transparencies that meet the printer specifications.

Check the paper type setting

Make sure the paper type setting is set to Transparency:

1. From the printer control panel Paper menu, check the Paper Type setting.
2. Before sending the job to print, specify the correct type setting:
   - For Windows users, specify the type from Print Properties.
   - For Macintosh users, specify the type from the Print dialog.

Solving color quality problems

This section helps answer some basic color-related questions and describes how some of the features provided in the Quality Menu can be used to solve typical color problems.

FAQ about color printing

What is RGB color?

Red, green, and blue light can be added together in various amounts to produce a large range of colors observed in nature. For example, red and green can be combined to create yellow. Televisions and computer monitors create colors in this manner. RGB color is a method of describing colors by indicating the amount of red, green, or blue needed to produce a certain color.

What is CMYK color?

Cyan, magenta, yellow, and black (known as *CMYK color*) inks or toners can be printed in various amounts to produce a large range of colors observed in nature. For example, cyan and yellow can be combined to create green. Printing presses, inkjet printers, and color laser/LED printers create colors in this manner. CMYK color is a method of describing colors by indicating the amount of cyan, magenta, yellow, and black needed to reproduce a particular color.

How is color specified in a document to be printed?

Software applications typically specify document color using RGB or CMYK color combinations. Additionally, they commonly let you modify the color of each object in a document. For more information, see the software application Help section.

How does the printer know what color to print?

When you print a document, information describing the type and color of each object is sent to the printer. The color information is passed through color conversion tables that translate the color into the appropriate amounts of cyan, magenta, yellow, and black toner needed to produce the desired color. The object type information lets different color conversion tables be used for different types of objects. For example, it is possible to apply one type of color conversion table to text while applying a different color conversion table to photographic images.

Should I use PostScript or PCL emulation printer software? What settings should I use for the best color?

The PostScript driver is strongly recommended for best color quality. The default settings in the PostScript driver provide preferred color quality for the majority of printouts.

Why doesn't the printed color match the color that I see on the computer screen?

The color conversion tables used in Auto Color Correction mode generally approximate the colors of a standard computer monitor. However, because of technology differences that exist between printers and monitors, there are many colors that can also be affected by monitor variations and lighting conditions. For recommendations on how the printer color sample pages may be useful in solving certain color-matching problems, see the question, “How can I match a particular color (such as a color in a corporate logo)?”

The printed page appears tinted. Can I slightly adjust the color?

Sometimes you may consider printed pages to appear tinted (for example, everything printed seems to be too red). This can be caused by environmental conditions, paper type, lighting conditions, or user preference. In these instances, adjusting the Color Balance setting may create more preferable color. Color Balance lets you make subtle adjustments to the amount of toner being used in each color plane. Selecting positive (or negative) values for cyan, magenta, yellow, and black under the Color Balance menu will slightly increase (or decrease) the amount of toner used for the chosen color. For example, if you believe the overall printed page to be too red, then decreasing both magenta and yellow could potentially improve color.

My color transparencies seem dark when being projected. Is there anything I can do to improve the color?

This problem most commonly occurs when projecting transparencies with reflective overhead projectors. To obtain the highest projected color quality, transmissive overhead projectors are recommended. If a reflective projector must be used, then adjusting the Toner Darkness setting to 1, 2, or 3 will lighten the transparency.

Make sure to print on the recommended type of color transparencies. For more information about the paper and media specifications, see the *User's Guide* on the *Software and Documentation* CD.

What is manual color correction?

The color conversion tables applied to each object when using the default Auto Color Correction setting generate preferred color for the majority of documents. Occasionally, you may want to apply a different color table mapping. This customization is accomplished using the Manual Color menu and the Manual Color Correction setting.

Manual Color Correction applies to RGB and CMYK color conversion table mappings as defined in the Manual Color menu.

You can select any of the different color conversion tables for RGB or CMYK:

Color conversion table	Settings
RGB	• sRGB Display • Display–True Black • sRGB Vivid • Vivid • Off
CMYK	• US CMYK • Euro CMYK • Vivid CMYK • Off

Note: The Manual Color Correction setting is not useful if the software application does not specify colors with RGB or CMYK combinations. It is also not effective in situations where the software application or the computer operating system controls the adjustment of colors.

How can I match a particular color (such as a corporate logo)?

Occasionally, you may have a need for the printed color of a particular object to closely match a specific color. For example, you may need to match the color of a corporate logo. While instances can occur in which the printer cannot exactly reproduce the desired color, you should be able to identify adequate color matches for the majority of cases.

The Color Samples menu item can provide useful information in helping solve this particular type of color-matching problem. The nine Color Samples values correspond to color conversion tables in the printer. Selecting any of the Color Samples values generates a multiple-page printout consisting of hundreds of colored boxes. Either a CMYK or RGB combination is located on each box, depending on the table selected. The observed color of each box is obtained by passing the CMYK or RGB combination labeled on the box through the selected color conversion table.

You can examine the color samples pages and identify the box whose color is the closest to the desired color. The color combination labeled on the box can then be used for modifying the color of the object in a software application. For instructions, see the software application Help. Manual Color Correction may be necessary to utilize the selected color conversion table for the particular object.

Selecting which Color Samples pages to use for a particular color-matching problem depends on the Color Correction setting being used (Auto, Off, or Manual), the type of object being printed (text, graphics, or images), and how the color of the object is specified in the software application (RGB or CMYK combinations). When the printer Color Correction setting is set to Off, the color is based on the print job information; no color conversion is implemented.

Note: The Color Samples pages are not useful if the software application does not specify colors with RGB or CMYK combinations. Additionally, certain situations exist where the software application or the computer operating system adjusts the RGB or CMYK combinations specified in the application through color management. The resulting printed color may not be an exact match of the Color Samples pages.

The following table can help identify which Color Sample pages to use for color matching.

Color specification and object to be printed	Color Correction setting	Sample pages to use
RGB—Text	Auto	sRGB Vivid
	Manual	Manual Color RGB Text Setting
RGB—Graphic	Auto	sRGB Vivid
	Manual	Manual Color RGB Graphic Setting
RGB—Image	Auto	sRGB Display
	Manual	Manual Color RGB Image Setting
CMYK—Text	Auto	US CMYK or Euro CMYK
	Manual	Manual Color CMYK Text Setting
CMYK—Graphic	Auto	US CMYK
	Manual	Manual Color CMYK Graphic Setting
CMYK—Image	Auto	US CMYK
	Manual	Manual Color CMYK Image Setting

What are Detailed Color Samples and how do I access them?

These pages require the use of the Embedded Web Server. The Embedded Web Server is a series of resident pages stored in the network printer firmware. To access these pages, browse to the IP address of the network printer. Click **Configuration Menu**, and then click **Detailed Color Samples**.

For more information about using the Embedded Web Server, see the *User's Guide* on the *Software and Documentation* CD.

Detailed Color Samples are pages similar to the default pages of color samples accessible from the Quality menu using the printer control panel. The default color samples available using this method have an increment value of 10% for red, green, and blue. If you find a value on this page that is close, but would like to scan more colors in a nearby area, then you can use the Detailed Color Samples to select the desired color values and a more specific increment. This provides a way to print multiple pages of colored boxes that surround a specific color of interest.

There are nine conversion tables available with the following three options:

- **Print**—Prints the default pages
- **Detailed**—Lets you enter individual red, green, and blue values and a specific increment of color
- **Reset**—Lets you clear the existing information and enter new values

The process can be duplicated for Cyan (C), Magenta (M), Yellow (Y), and Black (K) color conversion tables, too. Collectively, these values are known as CMYK color. The default increment is 10% for Black and 20% each for Cyan, Magenta, and Yellow.

Embedded Web Server does not open

Try one or more of the following:

Check the network connection

Make sure the printer and computer are turned on and connected to the same network.

Check address entered into the Web browser

- Depending on the network settings, you may need to type **`https://`** instead of **`http://`** before the printer IP address to access the Embedded Web Server. For more information, contact your system support person.
- Make sure you have the correct printer IP address.

Temporarily disable Web proxy servers

Proxy servers may block or restrict you from accessing certain Web sites including the Embedded Web Server. For more information, contact your system support person.

Contacting customer support

When you call customer support, describe the problem you are experiencing, the message on the display, and the troubleshooting steps you have already taken to find a solution.

You need to know your printer model type and serial number. For more information, see the label on the inside top front cover of the printer. The serial number is also listed on the menu settings page.

In the U.S. or Canada, call 1-800-539-6275. For other countries or regions, visit the Lexmark Web site at **http://support.lexmark.com**.

Notices

Product information

Product name:

Lexmark C950

Machine type:

5058

Model(s):

030

Edition notice

December 2010

The following paragraph does not apply to any country where such provisions are inconsistent with local law: LEXMARK INTERNATIONAL, INC., PROVIDES THIS PUBLICATION “AS IS” WITHOUT WARRANTY OF ANY KIND, EITHER EXPRESS OR IMPLIED, INCLUDING, BUT NOT LIMITED TO, THE IMPLIED WARRANTIES OF MERCHANTABILITY OR FITNESS FOR A PARTICULAR PURPOSE. Some states do not allow disclaimer of express or implied warranties in certain transactions; therefore, this statement may not apply to you.

This publication could include technical inaccuracies or typographical errors. Changes are periodically made to the information herein; these changes will be incorporated in later editions. Improvements or changes in the products or the programs described may be made at any time.

References in this publication to products, programs, or services do not imply that the manufacturer intends to make these available in all countries in which it operates. Any reference to a product, program, or service is not intended to state or imply that only that product, program, or service may be used. Any functionally equivalent product, program, or service that does not infringe any existing intellectual property right may be used instead. Evaluation and verification of operation in conjunction with other products, programs, or services, except those expressly designated by the manufacturer, are the user’s responsibility.

For Lexmark technical support, visit **support.lexmark.com**.

For information on supplies and downloads, visit **www.lexmark.com**.

If you don't have access to the Internet, you can contact Lexmark by mail:

Lexmark International, Inc.
Bldg 004-2/CSC
740 New Circle Road NW
Lexington, KY 40550
USA

© 2010 Lexmark International, Inc.

All rights reserved.

UNITED STATES GOVERNMENT RIGHTS

This software and any accompanying documentation provided under this agreement are commercial computer software and documentation developed exclusively at private expense.

Trademarks

Lexmark, Lexmark with diamond design, MarkNet, and MarkVision are trademarks of Lexmark International, Inc., registered in the United States and/or other countries.

PrintCryption is a trademark of Lexmark International, Inc.

Mac and the Mac logo are trademarks of Apple Inc., registered in the U.S. and other countries.

PCL® is a registered trademark of the Hewlett-Packard Company. PCL is Hewlett-Packard Company's designation of a set of printer commands (language) and functions included in its printer products. This printer is intended to be compatible with the PCL language. This means the printer recognizes PCL commands used in various application programs, and that the printer emulates the functions corresponding to the commands.

The following terms are trademarks or registered trademarks of these companies:

Albertus	The Monotype Corporation plc
Antique Olive	Monsieur Marcel OLIVE
Apple-Chancery	Apple Computer, Inc.
Arial	The Monotype Corporation plc
CG Times	Based on Times New Roman under license from The Monotype Corporation plc, is a product of Agfa Corporation
Chicago	Apple Computer, Inc.
Clarendon	Linotype-Hell AG and/or its subsidiaries
Eurostile	Nebiolo
Geneva	Apple Computer, Inc.
GillSans	The Monotype Corporation plc
Helvetica	Linotype-Hell AG and/or its subsidiaries
Hoefler	Jonathan Hoefler Type Foundry
ITC Avant Garde Gothic	International Typeface Corporation
ITC Bookman	International Typeface Corporation
ITC Mona Lisa	International Typeface Corporation
ITC Zapf Chancery	International Typeface Corporation
Joanna	The Monotype Corporation plc
Marigold	Arthur Baker
Monaco	Apple Computer, Inc.
New York	Apple Computer, Inc.
Oxford	Arthur Baker

Palatino	Linotype-Hell AG and/or its subsidiaries
Stempel Garamond	Linotype-Hell AG and/or its subsidiaries
Taffy	Agfa Corporation
Times New Roman	The Monotype Corporation plc
Univers	Linotype-Hell AG and/or its subsidiaries

All other trademarks are the property of their respective owners.

Federal Communications Commission (FCC) compliance information statement

This product has been tested and found to comply with the limits for a Class A digital device, pursuant to Part 15 of the FCC Rules. Operation is subject to the following two conditions: (1) this device may not cause harmful interference, and (2) this device must accept any interference received, including interference that may cause undesired operation.

The FCC Class A limits are designed to provide reasonable protection against harmful interference when the equipment is operated in a commercial environment. This equipment generates, uses, and can radiate radio frequency energy and, if not installed and used in accordance with the instruction manual, may cause harmful interference to radio communications. Operation of this equipment in a residential area is likely to cause harmful interference, in which case the user will be required to correct the interference at his own expense.

The manufacturer is not responsible for any radio or television interference caused by using other than recommended cables or by unauthorized changes or modifications to this equipment. Unauthorized changes or modifications could void the user's authority to operate this equipment.

Note: To assure compliance with FCC regulations on electromagnetic interference for a Class A computing device, use a properly shielded and grounded cable such as Lexmark part number 1021231 for parallel attach or 1021294 for USB attach. Use of a substitute cable not properly shielded and grounded may result in a violation of FCC regulations.

Modular component notice

This product may contain the following modular component(s):

Lexmark regulatory type/model LEX-M01-003; FCC ID: IYLM01003; IC: 2376A-M01003

Lexmark regulatory type/model LEX-M05-001; FCC ID:IYLLEXM05001; IC:2376A-M05001

Lexmark regulatory type/model LEX-M05-002; FCC ID:IYLLEXM05002; IC:2376A-M05002

Licensing notices

All licensing notices associated with this product can be viewed from the CD:\LEGAL directory of the installation software CD.

Noise emission levels

The following measurements were made in accordance with ISO 7779 and reported in conformance with ISO 9296.

Note: Some modes may not apply to your product.

1-meter average sound pressure, dBA	
Printing	55
Ready	33

Values are subject to change. See **www.lexmark.com** for current values.

Waste from Electrical and Electronic Equipment (WEEE) directive

The WEEE logo signifies specific recycling programs and procedures for electronic products in countries of the European Union. We encourage the recycling of our products. If you have further questions about recycling options, visit the Lexmark Web site at **www.lexmark.com** for your local sales office phone number.

Static sensitivity notice

This symbol identifies static-sensitive parts. Do not touch in the areas near these symbols without first touching the metal frame of the printer.

ENERGY STAR

Any Lexmark product bearing the ENERGY STAR emblem on the product or on a start-up screen is certified to comply with Environmental Protection Agency (EPA) ENERGY STAR requirements as configured when shipped by Lexmark.

Temperature information

Ambient temperature	15.6 to 32.2° C (60 to 90° F)
Shipping and storage temperature	-40° to 40° C (104° F)

Power consumption

Product power consumption

The following table documents the power consumption characteristics of the product.

Note: Some modes may not apply to your product.

Mode	Description	Power consumption (Watts)
Printing	The product is generating hard-copy output from electronic inputs.	775 W
Copy	The product is generating hard-copy output from hard-copy original documents.	N/A
Scan	The product is scanning hard-copy documents.	N/A
Ready	The product is waiting for a print job.	80 W
Sleep Mode	The product is in a high-level energy-saving mode.	11 W
Hibernate	The product is in a low-level energy-saving mode.	0.4 W
Off	The product is plugged into a wall outlet, but the power switch is turned off.	0 W

The power consumption levels listed in the previous table represent time-averaged measurements. Instantaneous power draws may be substantially higher than the average.

Values are subject to change. See **www.lexmark.com** for current values.

Power Saver

This product is designed with an energy-saving mode called Power Saver. The Power Saver Mode is equivalent to the Sleep Mode. The Power Saver Mode saves energy by lowering power consumption during extended periods of inactivity. The Power Saver Mode is automatically engaged after this product is not used for a specified period of time, called the Power Saver Timeout.

Factory default Power Saver Timeout for this product (in minutes):	30

By using the configuration menus, the Power Saver Timeout can be modified between 2 minutes and 240 minutes. Setting the Power Saver Timeout to a low value reduces energy consumption, but may increase the response time of the product. Setting the Power Saver Timeout to a high value maintains a fast response, but uses more energy.

Off mode

If this product has an off mode which still consumes a small amount of power, then to completely stop product power consumption, disconnect the power supply cord from the wall outlet.

Total energy usage

It is sometimes helpful to calculate the total product energy usage. Since power consumption claims are provided in power units of Watts, the power consumption should be multiplied by the time the product spends in each mode in order to calculate energy usage. The total product energy usage is the sum of each mode's energy usage.

Industry Canada compliance statement

This Class A digital apparatus meets all requirements of the Canadian Interference-Causing Equipment Standard ICES-003.

Avis de conformité aux normes de l’industrie du Canada

Cet appareil numérique de classe A est conforme aux exigences de la norme canadienne relative aux équipements pouvant causer des interférences NMB-003.

European Community (EC) directives conformity

This product is in conformity with the protection requirements of EC Council directives 2004/108/EC and 2006/95/EC on the approximation and harmonization of the laws of the Member States relating to electromagnetic compatibility and safety of electrical equipment designed for use within certain voltage limits.

The manufacturer of this product is: Lexmark International, Inc., 740 West New Circle Road, Lexington, KY, 40550 USA. The authorized representative is: Lexmark International Technology Hungária Kft., 8 Lechner Ödön fasor, Millennium Tower III, 1095 Budapest HUNGARY, A declaration of conformity to the requirements of the Directives is available upon request from the Authorized Representative.

This product satisfies the Class A limits of EN 55022 and safety requirements of EN 60950.

Radio interference notice

Warning

This is a product that complies with the emission requirements of EN55022 Class A limits and immunity requirements of EN55024. This product is not intended to be used in residential/domestic environments.

This is a Class A product. In a domestic environment, this product may cause radio interference, in which case the user may be required to take adequate measures.

Regulatory notices for wireless products

This section contains the following regulatory information pertaining to wireless products that contain transmitters, for example, but not limited to, wireless network cards or proximity card readers.

Exposure to radio frequency radiation

The radiated output power of this device is far below the radio frequency exposure limits of the FCC and other regulatory agencies. A minimum separation of 20 cm (8 inches) must be maintained between the antenna and any persons for this device to satisfy the RF exposure requirements of the FCC and other regulatory agencies.

Industry Canada (Canada)

This device complies with Industry Canada specification RSS-210. Operation is subject to the following two conditions: (1) this device may not cause interference, and (2) this device must accept any interference, including interference that may cause undesired operation of the device.

This device has been designed to operate only with the antenna provided. Use of any other antenna is strictly prohibited per regulations of Industry Canada.

To prevent radio interference to the licensed service, this device is intended to be operated indoors and away from windows to provide maximum shielding. Equipment (or its transmit antenna) that is installed outdoors is subject to licensing.

The installer of this radio equipment must ensure that the antenna is located or pointed such that it does not emit RF fields in excess of Health Canada limits for the general population; consult Safety Code 6, obtainable from Health Canada's Web site www.hc-sc.gc.ca/rpb.

The term "IC:" before the certification/registration number only signifies that the Industry Canada technical specifications were met.

Industry Canada (Canada)

Cet appareil est conforme à la norme RSS-210 d'Industry Canada. Son fonctionnement est soumis aux deux conditions suivantes :

(1) cet appareil ne doit pas provoquer d'interférences et (2) il doit accepter toute interférence reçue, y compris celles risquant d'altérer son fonctionnement.

Cet appareil a été conçu pour fonctionner uniquement avec l'antenne fournie. L'utilisation de toute autre antenne est strictement interdite par la réglementation d'Industry Canada.

En application des réglementations d'Industry Canada, l'utilisation d'une antenne de gain supérieur est strictement interdite.

Pour empêcher toute interférence radio au service faisant l'objet d'une licence, cet appareil doit être utilisé à l'intérieur et loin des fenêtres afin de garantir une protection optimale.

Si le matériel (ou son antenne d'émission) est installé à l'extérieur, il doit faire l'objet d'une licence.

L'installateur de cet équipement radio doit veiller à ce que l'antenne soit implantée et dirigée de manière à n'émettre aucun champ HF dépassant les limites fixées pour l'ensemble de la population par Santé Canada. Reportez-vous au Code de sécurité 6 que vous pouvez consulter sur le site Web de Santé Canada www.hc-sc.gc.ca/rpb.

Le terme « IC » précédant le numéro de d'accréditation/inscription signifie simplement que le produit est conforme aux spécifications techniques d'Industry Canada.

Notice to users in the European Union

Products bearing the CE mark are in conformity with the protection requirements of EC Council directives 2004/108/EC, 2006/95/EC, and 1999/5/EC on the approximation and harmonization of the laws of the Member States relating to electromagnetic compatibility, safety of electrical equipment designed for use within certain voltage limits and on radio equipment and telecommunications terminal equipment.

Compliance is indicated by the CE marking.

The manufacturer of this product is: Lexmark International, Inc., 740 West New Circle Road, Lexington, KY, 40550 USA. The authorized representative is: Lexmark International Technology Hungária Kft., 8 Lechner Ödön fasor, Millennium Tower III, 1095 Budapest HUNGARY, A declaration of conformity to the requirements of the Directives is available upon request from the Authorized Representative.

This product satisfies the Class A limits of EN 55022 and safety requirements of EN 60950.

Products equipped with 2.4GHz Wireless LAN option are in conformity with the protection requirements of EC Council directives 2004/108/EC, 2006/95/EC, and 1999/5/EC on the approximation and harmonization of the laws of the Member States relating to electromagnetic compatibility, safety of electrical equipment designed for use within certain voltage limits and on radio equipment and telecommunications terminal equipment.

Compliance is indicated by the CE marking.

Operation is allowed in all EU and EFTA countries, but is restricted to indoor use only.

The manufacturer of this product is: Lexmark International, Inc., 740 West New Circle Road, Lexington, KY, 40550 USA. The authorized representative is: Lexmark International Technology Hungária Kft., 8 Lechner Ödön fasor, Millennium Tower III, 1095 Budapest HUNGARY, A declaration of conformity to the requirements of the Directives is available upon request from the Authorized Representative.

This product may be used in the countries indicated in the table below.

AT	BE	BG	CH	CY	CZ	DE	DK	EE
EL	ES	FI	FR	HR	HU	IE	IS	IT
LI	LT	LU	LV	MT	NL	NO	PL	PT
RO	SE	SI	SK	TR	UK			

Česky	Společnost Lexmark International, Inc. tímto prohlašuje, že výrobek tento výrobek je ve shodě se základními požadavky a dalšími příslušnými ustanoveními směrnice 1999/5/ES.
Dansk	Lexmark International, Inc. erklærer herved, at dette produkt overholder de væsentlige krav og øvrige relevante krav i direktiv 1999/5/EF.
Deutsch	Hiermit erklärt Lexmark International, Inc., dass sich das Gerät dieses Gerät in Übereinstimmung mit den grundlegenden Anforderungen und den übrigen einschlägigen Bestimmungen der Richtlinie 1999/5/EG befindet.
Ελληνική	ΜΕ ΤΗΝ ΠΑΡΟΥΣΑ Η LEXMARK INTERNATIONAL, INC. ΔΗΛΩΝΕΙ ΟΤΙ ΑΥΤΟ ΤΟ ΠΡΟΪΟΝ ΣΥΜΜΟΡΦΩΝΕΤΑΙ ΠΡΟΣ ΤΙΣ ΟΥΣΙΩΔΕΙΣ ΑΠΑΙΤΗΣΕΙΣ ΚΑΙ ΤΙΣ ΛΟΙΠΕΣ ΣΧΕΤΙΚΕΣ ΔΙΑΤΑΞΕΙΣ ΤΗΣ ΟΔΗΓΙΑΣ 1999/5/ΕΚ.
English	Hereby, Lexmark International, Inc., declares that this type of equipment is in compliance with the essential requirements and other relevant provisions of Directive 1999/5/EC.

Español	Por medio de la presente, Lexmark International, Inc. declara que este producto cumple con los requisitos esenciales y cualesquiera otras disposiciones aplicables o exigibles de la Directiva 1999/5/CE.
Eesti	Käesolevaga kinnitab Lexmark International, Inc., et seade see toode vastab direktiivi 1999/5/EÜ põhinõuetele ja nimetatud direktiivist tulenevatele muudele asjakohastele sätetele.
Suomi	Lexmark International, Inc. vakuuttaa täten, että tämä tuote on direktiivin 1999/5/EY oleellisten vaatimusten ja muiden sitä koskevien direktiivin ehtojen mukainen.
Français	Par la présente, Lexmark International, Inc. déclare que l'appareil ce produit est conforme aux exigences fondamentales et autres dispositions pertinentes de la directive 1999/5/CE.
Magyar	Alulírott, Lexmark International, Inc. nyilatkozom, hogy a termék megfelel a vonatkozó alapvetõ követelményeknek és az 1999/5/EC irányelv egyéb elõírásainak.
Íslenska	Hér með lýsir Lexmark International, Inc. yfir því að þessi vara er í samræmi við grunnkröfur og aðrar kröfur, sem gerðar eru í tilskipun 1999/5/EC.
Italiano	Con la presente Lexmark International, Inc. dichiara che questo questo prodotto è conforme ai requisiti essenziali ed alle altre disposizioni pertinenti stabilite dalla direttiva 1999/5/CE.
Latviski	Ar šo Lexmark International, Inc. deklarē, ka šis izstrādājums atbilst Direktīvas 1999/5/EK būtiskajām prasībām un citiem ar to saistītajiem noteikumiem.
Lietuvių	Šiuo Lexmark International, Inc. deklaruoja, kad šis produktas atitinka esminius reikalavimus ir kitas 1999/5/EB direktyvos nuostatas.
Malti	Bil-preżenti, Lexmark International, Inc., jiddikjara li dan il-prodott huwa konformi mal-ħtiġijiet essenzjali u ma dispożizzjonijiet oħrajn relevanti li jinsabu fid-Direttiva 1999/5/KE.
Nederlands	Hierbij verklaart Lexmark International, Inc. dat het toestel dit product in overeenstemming is met de essentiële eisen en de andere relevante bepalingen van richtlijn 1999/5/EG.
Norsk	Lexmark International, Inc. erklærer herved at dette produktet er i samsvar med de grunnleggende krav og øvrige relevante krav i direktiv 1999/5/EF.
Polski	Niniejszym Lexmark International, Inc. oświadcza, że niniejszy produkt jest zgodny z zasadniczymi wymogami oraz pozostałymi stosownymi postanowieniami Dyrektywy 1999/5/EC.
Português	A Lexmark International Inc. declara que este este produto está conforme com os requisitos essenciais e outras disposições da Diretiva 1999/5/CE.
Slovensky	Lexmark International, Inc. týmto vyhlasuje, že tento produkt spĺňa základné požiadavky a všetky príslušné ustanovenia smernice 1999/5/ES.
Slovensko	Lexmark International, Inc. izjavlja, da je ta izdelek v skladu z bistvenimi zahtevami in ostalimi relevantnimi določili direktive 1999/5/ES.
Svenska	Härmed intygar Lexmark International, Inc. att denna produkt står i överensstämmelse med de väsentliga egenskapskrav och övriga relevanta bestämmelser som framgår av direktiv 1999/5/EG.

Statement of Limited Warranty

Lexmark C950

Lexmark International, Inc., Lexington, KY

This limited warranty applies to the United States and Canada. For customers outside the U.S., refer to the country-specific warranty information that came with your product.

This limited warranty applies to this product only if it was originally purchased for your use, and not for resale, from Lexmark or a Lexmark Remarketer, referred to in this statement as “Remarketer.”

Limited warranty

Lexmark warrants that this product:

—Is manufactured from new parts, or new and serviceable used parts, which perform like new parts

—Is, during normal use, free from defects in material and workmanship

If this product does not function as warranted during the warranty period, contact a Remarketer or Lexmark for repair or replacement (at Lexmark's option).

If this product is a feature or option, this statement applies only when that feature or option is used with the product for which it was intended. To obtain warranty service, you may be required to present the feature or option with the product.

If you transfer this product to another user, warranty service under the terms of this statement is available to that user for the remainder of the warranty period. You should transfer proof of original purchase and this statement to that user.

Limited warranty service

The warranty period starts on the date of original purchase as shown on the purchase receipt and ends 12 months later provided that the warranty period for any supplies and for any maintenance items included with the printer shall end earlier if it, or its original contents, are substantially used up, depleted, or consumed.

To obtain warranty service you may be required to present proof of original purchase. You may be required to deliver your product to the Remarketer or Lexmark, or ship it prepaid and suitably packaged to a Lexmark designated location. You are responsible for loss of, or damage to, a product in transit to the Remarketer or the Lexmark designated location.

When warranty service involves the exchange of a product or part, the item replaced becomes the property of the Remarketer or Lexmark. The replacement may be a new or repaired item.

The replacement item assumes the remaining warranty period of the original product.

Replacement is not available to you if the product you present for exchange is defaced, altered, in need of a repair not included in warranty service, damaged beyond repair, or if the product is not free of all legal obligations, restrictions, liens, and encumbrances.

Before you present this product for warranty service, remove all print cartridges, programs, data, and removable storage media (unless directed otherwise by Lexmark).

For further explanation of your warranty alternatives and the nearest Lexmark authorized servicer in your area contact Lexmark on the World Wide Web at **http://support.lexmark.com**.

Remote technical support is provided for this product throughout its warranty period. For products no longer covered by a Lexmark warranty, technical support may not be available or only be available for a fee.

Extent of limited warranty

Lexmark does not warrant uninterrupted or error-free operation of any product or the durability or longevity of prints produced by any product.

Warranty service does not include repair of failures caused by:

—Modification or unauthorized attachments

—Accidents, misuse, abuse or use inconsistent with Lexmark user's guides, manuals, instructions or guidance

—Unsuitable physical or operating environment

—Maintenance by anyone other than Lexmark or a Lexmark authorized servicer

—Operation of a product beyond the limit of its duty cycle

—Use of printing media outside of Lexmark specifications

—Refurbishment, repair, refilling or remanufacture by a third party of products, supplies or parts

—Products, supplies, parts, materials (such as toners and inks), software, or interfaces not furnished by Lexmark

TO THE EXTENT PERMITTED BY APPLICABLE LAW, NEITHER LEXMARK NOR ITS THIRD PARTY SUPPLIERS OR REMARKETERS MAKE ANY OTHER WARRANTY OR CONDITION OF ANY KIND, WHETHER EXPRESS OR IMPLIED, WITH RESPECT TO THIS PRODUCT, AND SPECIFICALLY DISCLAIM THE IMPLIED WARRANTIES OR CONDITIONS OF MERCHANTABILITY, FITNESS FOR A PARTICULAR PURPOSE, AND SATISFACTORY QUALITY. ANY WARRANTIES THAT MAY NOT BE DISCLAIMED UNDER APPLICABLE LAW ARE LIMITED IN DURATION TO THE WARRANTY PERIOD. NO WARRANTIES, EXPRESS OR IMPLIED, WILL APPLY AFTER THIS PERIOD. ALL INFORMATION, SPECIFICATIONS, PRICES, AND SERVICES ARE SUBJECT TO CHANGE AT ANY TIME WITHOUT NOTICE.

Limitation of liability

Your sole remedy under this limited warranty is set forth in this document. For any claim concerning performance or nonperformance of Lexmark or a Remarketer for this product under this limited warranty, you may recover actual damages up to the limit set forth in the following paragraph.

Lexmark's liability for actual damages from any cause whatsoever will be limited to the amount you paid for the product that caused the damages. This limitation of liability will not apply to claims by you for bodily injury or damage to real property or tangible personal property for which Lexmark is legally liable. **IN NO EVENT WILL LEXMARK BE LIABLE FOR ANY LOST PROFITS, LOST SAVINGS, INCIDENTAL DAMAGE, OR OTHER ECONOMIC OR CONSEQUENTIAL DAMAGES.** This is true even if you advise Lexmark or a Remarketer of the possibility of such damages. Lexmark is not liable for any claim by you based on a third party claim.

This limitation of remedies also applies to claims against any Suppliers and Remarketers of Lexmark. Lexmark's and its Suppliers' and Remarketers' limitations of remedies are not cumulative. Such Suppliers and Remarketers are intended beneficiaries of this limitation.

Additional rights

Some states do not allow limitations on how long an implied warranty lasts, or do not allow the exclusion or limitation of incidental or consequential damages, so the limitations or exclusions contained above may not apply to you.

This limited warranty gives you specific legal rights. You may also have other rights that vary from state to state.

LEXMARK SOFTWARE LIMITED WARRANTY AND LICENSE AGREEMENT

PLEASE READ CAREFULLY BEFORE USING THIS PRODUCT: BY USING THIS PRODUCT, YOU AGREE TO BE BOUND BY ALL THE TERMS AND CONDITIONS OF THIS SOFTWARE LIMITED WARRANTY AND LICENSE AGREEMENT. IF YOU DO NOT AGREE WITH THE TERMS OF THIS SOFTWARE LIMITED WARRANTY AND LICENSE AGREEMENT, PROMPTLY RETURN THE PRODUCT UNUSED AND REQUEST A REFUND OF THE AMOUNT YOU PAID. IF YOU ARE INSTALLING THIS PRODUCT FOR USE BY OTHER PARTIES, YOU AGREE TO INFORM THE USERS THAT USE OF THE PRODUCT INDICATES ACCEPTANCE OF THESE TERMS.

LEXMARK SOFTWARE LICENSE AGREEMENT

This License Agreement (“Software License Agreement”) is a legal agreement between you (either an individual or a single entity) and Lexmark International, Inc. (“Lexmark”) that, to the extent your Lexmark product or Software Program is not otherwise subject to a written software license agreement between you and Lexmark or its suppliers, governs your use of any Software Program installed on or provided by Lexmark for use in connection with your Lexmark product. The term “Software Program” includes machine-readable instructions, audio/visual content (such as images and recordings), and associated media, printed materials and electronic documentation, whether incorporated into, distributed with or for use with your Lexmark product.

1 **STATEMENT OF SOFTWARE LIMITED WARRANTY**. Lexmark warrants that the media (e.g., diskette or compact disk) on which the Software Program (if any) is furnished is free from defects in materials and workmanship under normal use during the warranty period. The warranty period is ninety (90) days and commences on the date the Software Program is delivered to the original end-user. This limited warranty applies only to Software Program media purchased new from Lexmark or an Authorized Lexmark Reseller or Distributor. Lexmark will replace the Software Program should it be determined that the media does not conform to this limited warranty.

2 **DISCLAIMER AND LIMITATION OF WARRANTIES**. EXCEPT AS PROVIDED IN THIS SOFTWARE LICENSE AGREEMENT AND TO THE MAXIMUM EXTENT PERMITTED BY APPLICABLE LAW, LEXMARK AND ITS SUPPLIERS PROVIDE THE SOFTWARE PROGRAM "AS IS" AND HEREBY DISCLAIM ALL OTHER WARRANTIES AND CONDITIONS, EITHER EXPRESS OR IMPLIED, INCLUDING, BUT NOT LIMITED TO, TITLE, NON-INFRINGEMENT, MERCHANTABILITY AND FITNESS FOR A PARTICULAR PURPOSE, AND ABSENCE OF VIRUSES, ALL WITH REGARD TO THE SOFTWARE PROGRAM. TO THE EXTENT LEXMARK CANNOT BY LAW DISCLAIM ANY COMPONENT OF THE IMPLIED WARRANTIES OF MERCHANTABILITY OR FITNESS FOR A PARTICULAR PURPOSE, LEXMARK LIMITS THE DURATION OF SUCH WARRANTIES TO THE 90-DAY TERM OF THE EXPRESS SOFTWARE LIMITED WARRANTY.

   This Agreement is to be read in conjunction with certain statutory provisions, as that may be in force from time to time, that imply warranties or conditions or impose obligations on Lexmark that cannot be excluded or modified. If any such provisions apply, then to the extent Lexmark is able, Lexmark hereby limits its liability for breach of those provisions to one of the following: providing you a replacement copy of the Software Program or reimbursement of the price paid for the Software Program.

   The Software Program may include internet links to other software applications and/or internet web pages hosted and operated by third parties unaffiliated with Lexmark. You acknowledge and agree that Lexmark is not responsible in any way for the hosting, performance, operation, maintenance, or content of, such software applications and/or internet web pages.

3 **LIMITATION OF REMEDY**. TO THE MAXIMUM EXTENT PERMITTED BY APPLICABLE LAW, ANY AND ALL LIABILITY OF LEXMARK UNDER THIS SOFTWARE LICENSE AGREEMENT IS EXPRESSLY LIMITED TO THE GREATER OF THE PRICE PAID FOR THE SOFTWARE PROGRAM AND FIVE U.S. DOLLARS (OR THE EQUIVALENT IN LOCAL CURRENCY). YOUR SOLE REMEDY AGAINST LEXMARK IN ANY DISPUTE UNDER THIS SOFTWARE LICENSE AGREEMENT SHALL BE TO SEEK TO RECOVER ONE OF THESE AMOUNTS, UPON PAYMENT OF WHICH LEXMARK SHALL BE RELEASED AND DISCHARGED OF ALL FURTHER OBLIGATIONS AND LIABILITY TO YOU.

   IN NO EVENT WILL LEXMARK, ITS SUPPLIERS, SUBSIDIARIES, OR RESELLERS BE LIABLE FOR ANY SPECIAL, INCIDENTAL, INDIRECT, EXEMPLARY, PUNITIVE, OR CONSEQUENTIAL DAMAGES (INCLUDING BUT NOT LIMITED TO LOST PROFITS OR REVENUES, LOST SAVINGS, INTERRUPTION OF USE OR ANY LOSS OF, INACCURACY IN, OR DAMAGE TO, DATA OR RECORDS, FOR CLAIMS OF THIRD PARTIES, OR DAMAGE TO REAL OR TANGIBLE PROPERTY, FOR LOSS OF PRIVACY ARISING OUT OR IN ANY WAY RELATED TO THE USE OF OR INABILITY TO USE THE SOFTWARE PROGRAM, OR OTHERWISE IN CONNECTION WITH ANY PROVISION OF THIS SOFTWARE LICENSE AGREEMENT), REGARDLESS OF THE NATURE OF THE CLAIM, INCLUDING BUT NOT LIMITED TO BREACH OF WARRANTY OR CONTRACT, TORT (INCLUDING NEGLIGENCE OR STRICT LIABILITY), AND EVEN IF LEXMARK, OR ITS SUPPLIERS, AFFILIATES, OR REMARKETERS HAVE BEEN ADVISED OF THE POSSIBILITY OF SUCH DAMAGES, OR FOR ANY CLAIM BY YOU BASED ON A THIRD-PARTY CLAIM, EXCEPT TO THE EXTENT THIS EXCLUSION OF DAMAGES IS DETERMINED LEGALLY INVALID. THE FOREGOING LIMITATIONS APPLY EVEN IF THE ABOVE-STATED REMEDIES FAIL OF THEIR ESSENTIAL PURPOSE.

4 **U.S.A. STATE LAWS**. This Software Limited Warranty gives you specific legal rights. You may also have other rights that vary from state to state. Some states do not allow limitations on how long an implied warranty lasts or the exclusion of limitation of incidental or consequential damages, so the above limitations may not apply to you.

5 **LICENSE GRANT**. Lexmark grants you the following rights provided you comply with all terms and conditions of this License Agreement:

- **a** **Use**. You may Use one (1) copy of the Software Program. The term "Use" means storing, loading, installing, executing, or displaying the Software Program. If Lexmark has licensed the Software Program to you for concurrent use, you must limit the number of authorized users to the number specified in your agreement with Lexmark. You may not separate the components of the Software Program for use on more than one computer. You agree that you will not Use the Software Program, in whole or in part, in any manner that has the effect of overriding, modifying, eliminating, obscuring, altering or de-emphasizing the visual appearance of any trademark, trade name, trade dress or intellectual property notice that appears on any computer display screens normally generated by, or as a result of, the Software Program.
- **b** **Copying**. You may make one (1) copy of the Software Program solely for purposes of backup, archiving, or installation, provided the copy contains all of the original Software Program's proprietary notices. You may not copy the Software Program to any public or distributed network.
- **c** **Reservation of Rights**. The Software Program, including all fonts, is copyrighted and owned by Lexmark International, Inc. and/or its suppliers. Lexmark reserves all rights not expressly granted to you in this License Agreement.
- **d** **Freeware**. Notwithstanding the terms and conditions of this License Agreement, all or any portion of the Software Program that constitutes software provided under public license by third parties ("Freeware") is licensed to you subject to the terms and conditions of the software license agreement accompanying such Freeware, whether in the form of a discrete agreement, shrink-wrap license, or electronic license terms at the time of download. Use of the Freeware by you shall be governed entirely by the terms and conditions of such license.

6 **TRANSFER**. You may transfer the Software Program to another end-user. Any transfer must include all software components, media, printed materials, and this License Agreement and you may not retain copies of the Software Program or components thereof. The transfer may not be an indirect transfer, such as a consignment. Prior to the transfer, the end-user receiving the transferred Software Program must agree to all these License Agreement terms. Upon transfer of the Software Program, your license is automatically terminated. You may not rent, sublicense, or assign the Software Program except to the extent provided in this License Agreement, and any attempt to do so shall be void.

7 **UPGRADES**. To Use a Software Program identified as an upgrade, you must first be licensed to the original Software Program identified by Lexmark as eligible for the upgrade. After upgrading, you may no longer use the original Software Program that formed the basis for your upgrade eligibility.

8 **LIMITATION ON REVERSE ENGINEERING**. You may not alter, decrypt, reverse engineer, reverse assemble, reverse compile or otherwise translate the Software Program, except as and to the extent expressly permitted to do so by applicable law for the purposes of inter-operability, error correction, and security testing. If you have such statutory rights, you will notify Lexmark in writing of any intended reverse engineering, reverse assembly, or reverse compilation. You may not decrypt the Software Program unless necessary for the legitimate Use of the Software Program.

9 **ADDITIONAL SOFTWARE**. This License Agreement applies to updates or supplements to the original Software Program provided by Lexmark unless Lexmark provides other terms along with the update or supplement.

10 **TERM**. This License Agreement is effective unless terminated or rejected. You may reject or terminate this license at any time by destroying all copies of the Software Program, together with all modifications, documentation, and merged portions in any form, or as otherwise described herein. Lexmark may terminate your license upon notice if you fail to comply with any of the terms of this License Agreement. Upon such termination, you agree to destroy all copies of the Software Program together with all modifications, documentation, and merged portions in any form.

11 **TAXES**. You agree that you are responsible for payment of any taxes including, without limitation, any goods and services and personal property taxes, resulting from this Agreement or your Use of the Software Program.

12 **LIMITATION ON ACTIONS**. No action, regardless of form, arising out of this Agreement may be brought by either party more than two years after the cause of action has arisen, except as provided under applicable law.

13 **APPLICABLE LAW**. This Agreement is governed by the laws of the Commonwealth of Kentucky, United States of America. No choice of law rules in any jurisdiction shall apply. The UN Convention on Contracts for the International Sale of Goods shall not apply.

14 **UNITED STATES GOVERNMENT RESTRICTED RIGHTS**. The Software Program has been developed entirely at private expense. Rights of the United States Government to use the Software Program is as set forth in this Agreement and as restricted in DFARS 252.227-7014 and in similar FAR provisions (or any equivalent agency regulation or contract clause).

15 **CONSENT TO USE OF DATA**. You agree that Lexmark, its affiliates, and agents may collect and use information you provide in relation to support services performed with respect to the Software Program and requested by you. Lexmark agrees not to use this information in a form that personally identifies you except to the extent necessary to provide such services.

16 **EXPORT RESTRICTIONS**. You may not (a) acquire, ship, transfer, or reexport, directly or indirectly, the Software Program or any direct product therefrom, in violation of any applicable export laws or (b) permit the Software Program to be used for any purpose prohibited by such export laws, including, without limitation, nuclear, chemical, or biological weapons proliferation.

17 **AGREEMENT TO CONTRACT ELECTRONICALLY**. You and Lexmark agree to form this License Agreement electronically. This means that when you click the “Agree” or “Yes” button on this page or use this product, you acknowledge your agreement to these License Agreement terms and conditions and that you are doing so with the intent to “sign” a contract with Lexmark.

18 **CAPACITY AND AUTHORITY TO CONTRACT**. You represent that you are of the legal age of majority in the place you sign this License Agreement and, if applicable, you are duly authorized by your employer or principal to enter into this contract.

19 **ENTIRE AGREEMENT**. This License Agreement (including any addendum or amendment to this License Agreement that is included with the Software Program) is the entire agreement between you and Lexmark relating to the Software Program. Except as otherwise provided for herein, these terms and conditions supersede all prior or contemporaneous oral or written communications, proposals, and representations with respect to the Software Program or any other subject matter covered by this License Agreement (except to the extent such extraneous terms do not conflict with the terms of this License Agreement, any other written agreement signed by you and Lexmark relating to your Use of the Software Program). To the extent any Lexmark policies or programs for support services conflict with the terms of this License Agreement, the terms of this License Agreement shall control.

MICROSOFT CORPORATION NOTICES

1 This product may incorporate intellectual property owned by Microsoft Corporation. The terms and conditions upon which Microsoft is licensing such intellectual property may be found at **http://go.microsoft.com/fwlink/?LinkId=52369**.

2 This product is based on Microsoft Print Schema technology. You may find the terms and conditions upon which Microsoft is licensing such intellectual property at **http://go.microsoft.com/fwlink/?LinkId=83288**.

ADOBE SYSTEMS INCORPORATED NOTICE

Contains Flash®, Flash® Lite™ and/or Reader® technology by Adobe Systems Incorporated

This Product contains Adobe® Flash® player software under license from Adobe Systems Incorporated, Copyright © 1995-2007 Adobe Macromedia Software LLC. All rights reserved. Adobe, Reader and Flash are trademarks of Adobe Systems Incorporated.

Index

Numerics

1565 Emulation error, load emulation option 215
1-tray module
  installing 43
2,000-sheet high-capacity feeder
  installing 43
2000-sheet high-capacity feeder
  loading 70
201–202 paper jams 184
203 paper jam 186
230 paper jam 188
231 paper jam 188
24x paper jam 191
250 paper jam 193
281 paper jam 193
31.xx Missing or Defective [color] cartridge 209
32.xx [color] cartridge part number unsupported by device 209
34 Incorrect paper size, check [paper source] 209
34 Incorrect paper type, check [paper source] 209
35 Insufficient memory to support Resource Save feature 210
37 Insufficient memory for Flash Memory Defragment operation 210
37 Insufficient memory to collate job 210
37 Insufficient memory, some Held Jobs were deleted 210
37 Insufficient memory, some held jobs will not be restored 210
38 Memory full 210
39 Complex page, some data may not have printed 210
3-tray module
  installing 43
40 [color] invalid refill, change cartridge 211
455 staple jam 199
4yy.xx paper jams 195
51 Defective flash detected 211
52 Not enough free space in flash memory for resources 211
520-sheet tray (standard or optional)
  loading 65
53 Unformatted flash detected 211
54 Network [x] software error 212
54 Serial option [x] error 211
54 Standard network software error 211
55 Unsupported option in slot [x] 212
56 Parallel port [x] disabled 212
56 Serial port [x] disabled 212
56 Standard parallel port disabled 212
56 Standard USB port disabled 212
56 USB port [x] disabled 213
57 Configuration change, some held jobs were not restored 213
58 Too many disks installed 213
58 Too many flash options installed 213
58 Too many trays attached 213
59 Incompatible tray [x] 214
61 Remove defective disk 214
62 Disk full 214
80 Replace paper pick rollers in [paper source] 214
80 Scheduled maintenance [x] 214
82.xx Replace waste toner bottle 214
82.xx Waste toner bottle missing 215
82.xx Waste toner bottle nearly full 215
88 Replace [color] cartridge 215
88.xx [color] cartridge low 215

A

accessing the Embedded Web Server 18
accessing the system board 29
Active NIC menu 114
adding bookmarks
  using the Embedded Web Server 21
  using the printer control panel 21
adding bookmarks from the printer control panel 21
adding bookmarks using the Embedded Web Server 21
adjusting display brightness 62
adjusting Sleep Mode 61
adjusting toner darkness 89
An error has occurred with the flash drive 202
AppleTalk menu 120
applications list
  home screen 18
assigning a custom paper type name 76
attaching cables 45
available internal options 28
avoiding paper jams 183

B

Bin Setup menu 112
black-and-white printing 89
blank pages 225
Booklet Adjustments menu 155
buttons, printer control panel 13
buttons, touch screen
  using 15

C

cables
  Ethernet 45
  USB 45
calling customer support 240
canceling
  print job, from computer 97
canceling a print job
  from a computer 97
  from the printer control panel 97
cannot open Embedded Web Server 240
card stock
  loading in multipurpose feeder 72
  tips 95
Change [paper source] to [custom string] 203
Change [paper source] to [custom string] load [orientation] 203
Change [paper source] to [custom type name] 202
Change [paper source] to [custom type name] load [orientation] 202

Change [paper source] to [paper size] 203
Change [paper source] to [paper size] [paper type] 203
Change [paper source] to [paper size] [paper type] load [orientation] 204
Change [paper source] to [paper size] load [orientation] 203
changing the home screen background
  using the printer control panel 19
changing the home screen background image
  using the Embedded Web Server 20
changing the idle screen settings 20
  using the Embedded Web Server 20
Check [src] orientation or guides 204
checking an unresponsive printer 202
checking printer status
  on Embedded Web Server 180
checking printer status using the Embedded Web Server 180
checking status of supplies 165
checking the status of supplies 165
checking the virtual display
  using the Embedded Web Server 180
checking virtual display
  using the Embedded Web Server 180
cleaning
  exterior of the printer 161
cleaning the printhead lenses 161
Close cover [x] 204
Close door [x] 204
confidential print jobs 95
  printing from a Macintosh computer 96
  printing from Windows 96
Confidential Print menu 128
configuration information
  wireless network 49
Configure MP menu 105
configuring Eco-Settings
  from printer control panel 22
  using the Embedded Web Server 23
configuring port settings 56
conservation settings
  brightness, adjusting 62
  Eco-Mode 60
  Eco-Settings 22, 23
  Hibernate Mode 62
  Quiet Mode 60
  Sleep Mode 61
conserving supplies 59
contacting customer support 240
corrupted printer hard disk 204
Custom Bin Names menu 111
custom name
  configuring 76
Custom Names menu 111
custom paper type
  assigning 76
custom paper type name
  creating 76
Custom Type [x]
  changing name 76
  changing paper type 76
Custom Types menu 111
customizing the home screen using the Embedded Web Server 18

D

Default Source menu 102
directory list
  printing 97
disk wiping 159
Disk Wiping menu 128
display icons, home screen applications
  changing 20
display troubleshooting
  display is blank 216
  display shows only diamonds 216
display, printer control panel 13
  adjusting brightness 62
disposing of printer hard disk 158
documents, printing
  from Macintosh 89
  from Windows 89

E

Eco-Mode setting 60
Eco-Settings
  configuring 23
  configuring, from printer control panel 22
Embedded Web Server
  accessing 18, 180
  administrator settings 180
  checking printer status 180
  checking supplies 165
  functions 180
  networking settings 180
  problem accessing 240
  setting up e-mail alerts 181
  using 180
Embedded Web Server Administrator's Guide
  where to find 180
Embedded Web Server, using
  remotely accessing the printer control panel 25
emission notices 243, 246, 247
Empty the hole punch box 204
encrypting the printer hard disk 160
envelopes
  loading in multipurpose feeder 72
  tips 94
environmental settings
  conserving supplies 59
  display brightness, adjusting 62
  Eco-Mode 60
  Hibernate Mode 62
  Quiet Mode 60
  Sleep Mode 61
erasing non-volatile memory 159
erasing printer hard disk memory 159
erasing volatile memory 158
Error reading USB hub. Remove hub. 205
Ethernet networking
  Macintosh 53
  Windows 53
Ethernet port 45
exit bins
  linking 76
exporting a configuration
  using the Embedded Web Server 25
exporting a configuration using the Embedded Web Server 25
exterior of the printer
  cleaning 161

e-mail alerts
low supply levels 181
paper jam 181
setting up 181

F

factory defaults
restoring 182
FAQ about color printing 237
FCC notices 243, 246
fiber optic
network setup 53
finding more information about the printer 8
finisher
finishing features 86
supported paper sizes 86
Finishing menu 143
firmware card
installing 32
flash drive
printing from 91
Flash Drive menu 138
flash drives
supported file types 92
flash memory card
installing 32
troubleshooting 223
font sample list
printing 96
Forms and Favorites
overview 20

G

General Settings menu 131
Green settings
Eco-Mode 60
Hibernate Mode 62
Quiet Mode 60
green settings
Eco-Settings 22, 23

H

held jobs 95
printing from a Macintosh computer 96
printing from Windows 96
Help menu 156
Hibernate Mode
using 62
home screen
applications 18
buttons, understanding 14
customizing 18
home screen applications
changing display icons and labels 20
using 18
home screen background image
adding, using Embedded Web Server 20
changing, using Embedded Web Server 20
home screen buttons
understanding 14
home screen, customizing
using the Embedded Web Server 18
HTML menu 154

I

icons, home screen applications
changing 20
icons, printer control panel 13
idle screen images
adding, using Embedded Web Server 20
deleting, using Embedded Web Server 20
editing, using Embedded Web Server 20
Image menu 155
importing a configuration
using the Embedded Web Server 25
importing a configuration using the Embedded Web Server 25
Insert hole punch box 205
Insert staple cartridge 205
Install bin [x] 205
installing a memory card 30
installing an Internal Solutions Port 34
installing on a wireless network
using Windows 49
installing options
order of installation 42
installing printer
on wireless network 49
installing printer hard disk 37
installing printer on a network
wired networking 53
installing printer on a wireless network
using Macintosh 51
installing printer software 47
adding options 48
installing the 1-tray module 43
installing the 2,000-sheet high-capacity feeder 43
installing the 3-tray module 43
installing the tandem-tray module 43
internal print server
troubleshooting 223
Internal Solutions Port
changing port settings 56
installing 34
troubleshooting 223
IPv6 menu 118

J

jams
avoiding 183
locating jam areas 183
locations 183
numbers 183
jams, clearing
201–202 paper jams 184
203 paper jam 186
230 paper jam 188
231 paper jam 188
24x paper jam 191
250 paper jam 193
281 paper jam 193
455 staple jam 199
4yy.xx paper jams 195
Job Accounting menu 142

L

labels, paper
tips 94
letterhead
loading, 2000-sheet high-capacity feeder 70
loading, multipurpose feeder 93
loading, trays 93
light colored line, white line, or incorrectly colored line appears on prints 228
linking
exit bins 76
linking exit bins 76

linking trays 75
Load Manual Feeder with [custom string] 206
Load Manual Feeder with [custom type name] 206
Load Manual Feeder with [paper size] 207
Load Manual Feeder with [paper type] [paper size] 207
Load staples 207
loading
  2000-sheet high-capacity feeder 70
  520-sheet tray (standard or optional) 65
  letterhead in 2000-sheet high-capacity feeder 70
  multipurpose feeder 72
  optional 1,150-sheet tray 68
  optional 850-sheet tray 68
loading card stock
  in multipurpose feeder 72
loading envelopes
  in multipurpose feeder 72
loading letterhead
  paper orientation 93
loading the multipurpose feeder 72
loading the standard tray 65
loading transparencies
  in multipurpose feeder 72

M

Manual feeder expects [paper size]. Check [paper source] guides 207
max speed and max yield
  using 90
memory
  types installed on printer 158
memory card
  installing 30
  troubleshooting 223
menu settings page
  printing 47
menus
  Active NIC 114
  AppleTalk 120
  Bin Setup 112
  Booklet Adjustments 155
  Confidential Print 128
  Configure MP 105
  Custom Bin Names 111
  Custom Names 111
  Custom Types 111
  Default Source 102
  diagram of 99
  Disk Wiping 128
  Finishing 143
  Flash Drive 138
  General Settings 131
  Help 156
  HTML 154
  Image 155
  IPv6 118
  Job Accounting 142
  Miscellaneous Security Settings 127
  Network [x] 114
  Network Card 116
  Network Reports 116
  Paper Loading 109
  Paper Size/Type 102
  Paper Texture 106
  Paper Weight 108
  Parallel [x] 122
  PCL Emul 151
  PDF 150
  PostScript 150
  Quality 146
  Reports 113
  Security Audit Log 129
  Serial [x] 124
  Set Date and Time 130
  Setup 140
  SMTP Setup menu 126
  Standard Network 114
  Standard USB 120
  Substitute Size 106
  Supplies 100
  TCP/IP 117
  Universal Setup 111
  Utilities 149
  Wireless 119
  XPS 149
menus diagram 99
Miscellaneous Security Settings menu 127
moving the printer 179
moving your printer 9
multipurpose feeder
  loading 72

N

Network [x] menu 114
Network Card menu 116
network options 28
Network Reports menu 116
network setup page
  printing 47
Networking Guide
  where to find 180
noise emission levels 243
non-volatile memory 158
  erasing 159
notices 242, 243, 244, 245, 246, 247, 248, 254

O

optional 1,150-sheet tray
  loading 68
optional 850-sheet tray
  loading 68
options
  1-tray module, installing 43
  2,000-sheet high-capacity feeder, installing 43
  3-tray module, installing 43
  firmware card 32
  firmware cards 28
  flash memory card 32
  Internal Solutions Port, installing 34
  list 28
  memory card, installing 30
  memory cards 28
  network 28
  order of installation 42
  ports 28
  printer hard disk, installing 37
  printer hard disk, removing 41
  tandem-tray module, installing 43
  updating in printer driver 48
ordering
  staple cartridges 167
  toner cartridges 166
  waste toner bottle 167
ordering photoconductor units 166

P

paper
  characteristics 78
  finishing features 86
  letterhead 79
  preprinted forms 79
  recycled 80
  selecting 79

storing 81
unacceptable 79, 80
Universal size setting 64
using recycled 59
paper feed troubleshooting
message remains after jam is cleared 225
paper jams
avoiding 183
paper jams, clearing
201–202 paper jams 184
203 paper jam 186
230 paper jam 188
231 paper jam 188
24x paper jam 191
250 paper jam 193
281 paper jam 193
4yy.xx paper jams 195
Paper Loading menu 109
paper size
setting 64
Paper Size/Type menu 102
paper sizes
supported 82
Paper Texture menu 106
paper type
setting 64
paper types
duplex support 84
supported by printer 84
supported by the finisher 84
where to load 84
Paper Weight menu 108
Parallel [x] menu 122
PCL Emul menu 151
PDF menu 150
photoconductor unit
replacing 174
photoconductor units
ordering 166
port settings
configuring 56
PostScript menu 150
print irregularities 229
print job
canceling, from computer 97
print quality
replacing a photoconductor unit 174
print quality troubleshooting
black streaks on a page 234
blank pages 225
characters have jagged edges 226
clipped images 226
fine horizontal lines 226
gray background on prints 227
light colored line, white line, or incorrectly colored line appears on prints 228
poor transparency quality 236
print irregularities 229
print is too dark 230
print is too light 231
repeating defects appear on a page 232
shadow images appear on prints 227
skewed print 232
solid color pages 233
streaked horizontal lines appear on prints 234
toner fog or background shading on the page 235
toner rubs off 236
white streaks on a page 234
print quality, troubleshooting
cleaning the printhead lenses 161
Print quota exceeded. Print job canceled. 208
Print quota exceeded. Print job incomplete. 208
print troubleshooting
error reading flash drive 216
held jobs do not print 217
incorrect characters print 218
incorrect margins 228
jammed pages are not reprinted 225
job prints from wrong tray 218
job prints on wrong paper 218
jobs do not print 216
Large jobs do not collate 219
multiple-language PDF files do not print 216
paper curl 229
paper frequently jams 224
print job takes longer than expected 217
tray linking does not work 218
unexpected page breaks occur 219
printer
basic model 11
fully configured 11
minimum clearances 9
moving 9, 179
selecting a location 9
shipping 179
turning on 27
printer configurations 11
printer control panel
adjusting brightness 62
changing the home screen background 19
configuring Eco-Settings 22
factory defaults, restoring 182
remotely accessing using the Embedded Web Server 25
using 13
printer hard disk
disposing of 158
encrypting 160
installing 37
removing 41
troubleshooting 223
wiping 159
printer hard disk encryption 160
printer hard disk memory
erasing 159
printer information
where to find 8
printer messages
1565 Emulation error, load emulation option 215
31.xx Missing or Defective [color] cartridge 209
32.xx [color] cartridge part number unsupported by device 209
34 Incorrect paper size, check [paper source] 209
34 Incorrect paper type, check [paper source] 209
35 Insufficient memory to support Resource Save feature 210
37 Insufficient memory for Flash Memory Defragment operation 210
37 Insufficient memory to collate job 210
37 Insufficient memory, some Held Jobs were deleted 210
37 Insufficient memory, some held jobs will not be restored 210
38 Memory full 210
39 Complex page, some data may not have printed 210

40 [color] invalid refill, change cartridge 211
51 Defective flash detected 211
52 Not enough free space in flash memory for resources 211
53 Unformatted flash detected 211
54 Network [x] software error 212
54 Serial option [x] error 211
54 Standard network software error 211
55 Unsupported option in slot [x] 212
56 Parallel port [x] disabled 212
56 Serial port [x] disabled 212
56 Standard parallel port disabled 212
56 Standard USB port disabled 212
56 USB port [x] disabled 213
57 Configuration change, some held jobs were not restored 213
58 Too many disks installed 213
58 Too many flash options installed 213
58 Too many trays attached 213
59 Incompatible tray [x] 214
61 Remove defective disk 214
62 Disk full 214
80 Replace paper pick rollers in [paper source] 214
80 Scheduled maintenance [x] 214
82.xx Replace waste toner bottle 214
82.xx Waste toner bottle missing 215
82.xx Waste toner bottle nearly full 215
84 Replace black pc unit 174
84 Replace color pc units 174
88 Replace [color] cartridge 215
88.xx [color] cartridge low 215
an error has occurred with the flash drive 202
Change [paper source] to [custom string] 203
Change [paper source] to [custom string] load [orientation] 203
Change [paper source] to [custom type name] 202
Change [paper source] to [custom type name] load [orientation] 202
Change [paper source] to [paper size] 203
Change [paper source] to [paper size] [paper type] 203
Change [paper source] to [paper size] [paper type] load [orientation] 204
Change [paper source] to [paper size] load [orientation] 203
Check [src] orientation or guides 204
Close cover [x] 204
Close door [x] 204
Disk corrupted 204
Empty the hole punch box 204
Error reading USB hub. Remove hub. 205
Insert hole punch box 205
Insert staple cartridge 205
Insert Tray [x] 205
Install bin [x] 205
Load [src] with [custom string] 206
Load [src] with [custom type name] 205
Load [src] with [size] 206
Load [src] with [type] [size] 206
Load Manual Feeder with [custom string] 206
Load Manual Feeder with [custom type name] 206
Load Manual Feeder with [paper size] 207
Load Manual Feeder with [paper type] [paper size] 207
Load staples 207
Manual feeder expects [paper size]. Check [paper source] guides 207
Print quota exceeded. Print job canceled. 208
Print quota exceeded. Print job incomplete. 208
Remove packaging material, [area name] 208
Remove paper from [linked bin set name] 208
Remove paper from all bins 208
Remove paper from bin [x] 207
Remove paper from standard output bin 207
Restore held jobs? 208
Some held jobs were not restored 208
Unsupported camera mode, unplug camera and change mode 208
Unsupported disk 208
Unsupported USB device, please remove 204
Unsupported USB hub, please remove 205
printer options troubleshooting
2,000-sheet drawer problems 222
cannot detect flash memory card 223
cannot detect printer hard disk 223
internal print server 223
Internal Solutions Port 223
memory card 223
option does not work 221
paper tray problems 222
USB/parallel interface card 224
printer software
installing 47
printhead lenses
cleaning 161
printing
black-and-white 89
canceling, from printer control panel 97
directory list 97
font sample list 96
from flash drive 91
from Macintosh 89
from Windows 89
max speed and max yield 90
menu settings page 47
network setup page 47
printing a directory list 97
printing a document 89
printing a font sample list 96
printing a menu settings page 47
printing a network setup page 47
printing confidential and other held jobs
from a Macintosh computer 96
from Windows 96
printing from a flash drive 91
printing in black and white 89

publications
  where to find 8

Q

Quality menu 146
Quiet Mode
  print quality troubleshooting 226

R

recycled paper
  using 59, 80
recycling
  Lexmark packaging 63
  Lexmark products 63
  toner cartridges 63
  WEEE statement 244
reducing noise
  configuring, using the printer control panel 22
reducing printer noise 60
  using the Embedded Web Server 23
Remote Operator Panel
  setting up 24
Remove packaging material, [area name] 208
Remove paper from [linked bin set name] 208
Remove paper from all bins 208
Remove paper from bin [x] 207
Remove paper from standard output bin 207
removing printer hard disk 41
repeat print jobs 95
  printing from a Macintosh computer 96
  printing from Windows 96
replacing a toner cartridge 167
replacing supplies
  toner cartridge 167
  waste toner bottle 169
replacing the waste toner bottle 169
reports
  viewing 181
Reports menu 113
reserve print jobs 95
  printing from a Macintosh computer 96
  printing from Windows 96
Restore held jobs? 208
restoring factory default settings 182

S

safety information 6, 7
saving energy
  configuring, using the printer control panel 22
  using the Embedded Web Server 23
saving paper
  configuring, using the printer control panel 22
  using the Embedded Web Server 23
Security Audit Log menu 129
selecting a location for the printer 9
Serial [x] menu 124
serial printing
  setting up 57
Set Date and Time menu 130
setting
  TCP/IP address 117
setting the paper size 64
setting the paper type 64
setting the Universal paper size 64
setting up e-mail alerts using the Embedded Web Server 181
setting up serial printing 57
setting up the printer
  on a wired network (Macintosh) 53
  on a wired network (Windows) 53
setting up the Remote Operator Panel 24
Setup menu 140
shadow images appear on prints 227
shipping the printer 179
Sleep Mode
  adjusting 61
SMTP Setup menu 126
Some held jobs were not restored 208
Standard Network menu 114
standard tray
  loading 65
Standard USB menu 120
staple cartridges
  ordering 167
staple jam, clearing
  455 staple jam 199
statement of volatility 158
status of supplies
  checking 165
storing
  paper 81
  supplies 165
storing print jobs 95
streaked horizontal lines appear on prints 234
streaks appear on a page 234
Substitute Size menu 106
supplies
  checking status 165
  checking, from printer control panel 165
  checking, using the Embedded Web Server 165
  conserving 59
  storing 165
  using recycled paper 59
Supplies menu 100
supplies, ordering
  photoconductor units 166
  staple cartridges 167
  toner cartridges 166
  waste toner bottle 167
supported flash drives 92
supported paper sizes 82
supported paper types and weights 84
system board
  accessing 29
system board cover
  reattaching 29

T

tandem-tray module
  installing 43
TCP/IP menu 117
tips
  card stock 95
  envelopes 94
  labels, paper 94
  on using letterhead 93
  on using transparencies 93
tips on using letterhead 93
toner cartridge
  replacing 167
toner cartridges
  ordering 166

recycling 63
toner darkness
adjusting 89
toner fog or background shading
appears on the page 235
toner rubs off 236
touch screen
buttons, using 15
transparencies
loading 93
loading in multipurpose feeder 72
tips on using 93
using 93
trays
linking 75
unlinking 75
troubleshooting
A network destination stopped working or is invalid 220
an application error has occurred 219
cannot open Embedded Web Server 240
checking an unresponsive printer 202
contacting customer support 240
FAQ about color printing 237
Forms are not available or are not working 220
Scan to Network 220
troubleshooting, display
display is blank 216
display shows only diamonds 216
troubleshooting, paper feed
message remains after jam is cleared 225
troubleshooting, print
error reading flash drive 216
held jobs do not print 217
incorrect characters print 218
incorrect margins 228
jammed pages are not reprinted 225
job prints from wrong tray 218
job prints on wrong paper 218
jobs do not print 216
Large jobs do not collate 219
multiple-language PDF files do not print 216
paper curl 229
paper frequently jams 224
print job takes longer than expected 217
tray linking does not work 218
unexpected page breaks occur 219
troubleshooting, print quality
black streaks on a page 234
blank pages 225
characters have jagged edges 226
clipped images 226
fine horizontal lines 226
gray background on prints 227
light colored line, white line, or incorrectly colored line appears on prints 228
poor transparency quality 236
print irregularities 229
print is too dark 230
print is too light 231
repeating defects appear on a page 232
shadow images appear on prints 227
skewed print 232
solid color pages 233
streaked horizontal lines appear on prints 234
toner fog or background shading on the page 235
toner rubs off 236
white streaks on a page 234
troubleshooting, printer options
2,000-sheet drawer problems 222
cannot detect flash memory card 223
cannot detect printer hard disk 223
internal print server 223
Internal Solutions Port 223
memory card 223
option does not work 221
paper tray problems 222
USB/parallel interface card 224
turning on the printer 27

U

understanding the home screen 14
Universal Paper Size
setting 64
Universal Setup menu 111
unlinking trays 75
Unsupported camera mode, unplug camera and change mode 208
Unsupported USB device, please remove 204
Unsupported USB hub, please remove 205
updating options in printer driver 48
USB port 45
USB printer port 45
USB/parallel interface card
troubleshooting 224
using Eco-Mode 60
using Hibernate Mode 62
using max speed and max yield 90
using Quiet Mode 60
using recycled paper 59
using the Embedded Web Server 180
using the printer control panel 13
using the touch-screen buttons 15
Utilities menu 149

V

verify print jobs 95
printing from a Macintosh computer 96
printing from Windows 96
viewing
reports 181
virtual display
checking, using Embedded Web Server 180
volatile memory 158
erasing 158
volatility
statement of 158

W

waste toner bottle
ordering 167
replacing 169
wiping the printer hard disk 159
wired network setup
using Macintosh 53
using Windows 53
Wireless menu 119
wireless network
configuration information 49
installation, using Macintosh 51
installation, using Windows 49

wireless network setup
in Windows 49
wireless printer setup
in Macintosh 51

X

XPS menu 149