System x3620 M3 Type 7376

# Installation and User's Guide

System x3620 M3 Type 7376

# Installation and User's Guide

**Note:** Before using this information and the product it supports, read the information in Appendix B, “Notices,” on page 107, the *IBM Safety Information* and *Environmental Notices and User Guide* documents on the IBM *Documentation* CD, and the *Warranty Information* document.

**The most recent version of this document is available at http://www.ibm.com/systems/support/.**

**Second Edition (July 2010)**

**© Copyright IBM Corporation 2010.**
US Government Users Restricted Rights – Use, duplication or disclosure restricted by GSA ADP Schedule Contract with IBM Corp.

# Contents

**Safety** . . . . . vii

**Chapter 1. The System x3620 M3 Type 7376 server** . . . . . 1
The IBM Documentation CD . . . . . 3
Hardware and software requirements . . . . . 3
Using the Documentation Browser . . . . . 3
Related documentation . . . . . 4
Notices and statements in this document . . . . . 6
Features and specifications . . . . . 6
What your server offers . . . . . 8
Reliability, availability, and serviceability features . . . . . 11
IBM Systems Director . . . . . 12
The Update*Xpress* System Pack Installer . . . . . 13
Server controls, LEDs, and power . . . . . 13
Front view . . . . . 13
Rear view . . . . . 15
Server power features . . . . . 17

**Chapter 2. Installing optional devices** . . . . . 19
Server components . . . . . 19
System-board internal connectors . . . . . 20
System-board DIMM connectors . . . . . 21
System-board external connectors . . . . . 22
System-board jumpers . . . . . 23
System-board LEDs . . . . . 25
Fan board connectors . . . . . 27
PCI riser-card adapter connectors . . . . . 27
Installation guidelines . . . . . 28
System reliability guidelines . . . . . 29
Working inside the server with the power on . . . . . 29
Handling static-sensitive devices . . . . . 30
Internal cable routing and connectors . . . . . 31
DVD drive cable connections . . . . . 31
Tape drive cable connections . . . . . 32
Hot-swap hard disk drive backplane cable connections . . . . . 34
Simple-swap hard disk drive backplate cable connections . . . . . 35
Removing the cover . . . . . 37
Removing the air baffle . . . . . 38
Removing the PCI riser-card assembly . . . . . 39
Installing an adapter . . . . . 40
Installing a ServeRAID adapter . . . . . 42
Installing a ServeRAID adapter battery on the remote battery tray . . . . . 44
Installing an optional ServeRAID adapter advanced feature key . . . . . 48
Installing an IBM Virtual Media Key . . . . . 49
Installing a hot-swap hard disk drive . . . . . 51
Removing a hot-swap hard disk drive . . . . . 52
Installing a simple-swap hard disk drive . . . . . 52
Removing a simple-swap hard disk drive . . . . . 53
Installing an optional DVD drive cage . . . . . 54
Installing an optional DVD drive . . . . . 56
Installing an optional tape drive cage . . . . . 57
Installing an optional tape drive . . . . . 59
Installing a memory module . . . . . 60

© Copyright IBM Corp. 2010

DIMM installation sequence . . . . . 62
Memory mirroring . . . . . 63
Online-spare memory . . . . . 64
Installing a DIMM . . . . . 65
Installing the simple-swap hard disk drive backplate . . . . . 67
Installing a second microprocessor . . . . . 71
Thermal grease. . . . . 74
Installing a hot-swap power supply . . . . . 75
Installing a USB hypervisor memory key . . . . . 77
Completing the installation. . . . . 78
Installing the PCI riser-card assembly . . . . . 78
Installing the air baffle . . . . . 79
Installing the server cover . . . . . 80
Connecting the external cables . . . . . 81
Updating the server configuration . . . . . 82

**Chapter 3. Configuring the server** . . . . . 83
Using the Setup utility . . . . . 84
Starting the Setup utility . . . . . 84
Setup utility menu choices. . . . . 85
Passwords . . . . . 88
Using the Boot Selection Menu program . . . . . 89
Starting the backup server firmware . . . . . 89
Using the ServerGuide Setup and Installation CD . . . . . 90
ServerGuide features . . . . . 90
Setup and configuration overview . . . . . 90
Typical operating-system installation . . . . . 91
Installing your operating system without using ServerGuide . . . . . 91
Using the integrated management module . . . . . 92
Using the USB memory key for VMware hypervisor . . . . . 93
Using the remote presence capability and blue-screen capture . . . . . 93
Enabling the remote presence feature . . . . . 94
Obtaining the IP address for the Web interface access . . . . . 94
Logging on to the Web interface . . . . . 95
Configuring the Gigabit Ethernet controller . . . . . 95
Enabling and configuring Serial over LAN (SOL) . . . . . 96
UEFI update and configuration . . . . . 96
Using the LSI Logic Configuration Utility program . . . . . 97
Starting the LSI Logic Configuration Utility program . . . . . 98
Formatting a hard disk drive . . . . . 98
Creating a mirrored pair of hard disk drives . . . . . 98
Configuring a ServeRAID controller . . . . . 99
Starting the Intel Matrix Storage Manager option ROM program . . . . . 99
IBM Advanced Settings Utility program. . . . . 101
Updating the firmware . . . . . 101
Updating IBM Systems Director . . . . . 102

**Appendix A. Getting help and technical assistance** . . . . . 105
Before you call . . . . . 105
Using the documentation . . . . . 105
Getting help and information from the World Wide Web . . . . . 105
Software service and support . . . . . 106
Hardware service and support . . . . . 106
IBM Taiwan product service . . . . . 106

**Appendix B. Notices** . . . . . 107

Trademarks. . . . . 107
Important notes . . . . . 108
Particulate contamination. . . . . 109
Product recycling and disposal . . . . . 109
Battery return program. . . . . 111
Documentation format . . . . . 112
Electronic emission notices . . . . . 113
Federal Communications Commission (FCC) statement . . . . . 113
Industry Canada Class A emission compliance statement . . . . . 113
Avis de conformité à la réglementation d'Industrie Canada . . . . . 113
Australia and New Zealand Class A statement . . . . . 113
United Kingdom telecommunications safety requirement . . . . . 113
European Union EMC Directive conformance statement . . . . . 113
Germany Class A statement. . . . . 114
Japan VCCI Class A statement . . . . . 115
Japan Electronics and Information Technology Industries Association (JEITA) statement . . . . . 115
Korea Communications Commission (KCC) statement . . . . . 115
Russia Electromagnetic Interference (EMI) Class A statement . . . . . 115
People's Republic of China Class A electronic emission statement . . . . 116
Taiwan Class A compliance statement . . . . . 116

**Index** . . . . . 117

# Safety

Before installing this product, read the Safety Information.

قبل تركيب هذا المنتج، يجب قراءة الملاحظات الآمنية

Antes de instalar este produto, leia as Informações de Segurança.

**在安装本产品之前，请仔细阅读 Safety Information (安全信息)。**

安裝本產品之前，請先閱讀「安全資訊」。

Prije instalacije ovog produkta obavezno pročitajte Sigurnosne Upute.

Před instalací tohoto produktu si přečtěte příručku bezpečnostních instrukcí.

Læs sikkerhedsforskrifterne, før du installerer dette produkt.

Lees voordat u dit product installeert eerst de veiligheidsvoorschriften.

Ennen kuin asennat tämän tuotteen, lue turvaohjeet kohdasta Safety Information.

Avant d'installer ce produit, lisez les consignes de sécurité.

Vor der Installation dieses Produkts die Sicherheitshinweise lesen.

Πριν εγκαταστήσετε το προϊόν αυτό, διαβάστε τις πληροφορίες ασφάλειας (safety information).

לפני שתתקינו מוצר זה, קראו את הוראות הבטיחות.

A termék telepítése előtt olvassa el a Biztonsági előírásokat!

Prima di installare questo prodotto, leggere le Informazioni sulla Sicurezza.

製品の設置の前に、安全情報をお読みください。

본 제품을 설치하기 전에 안전 정보를 읽으십시오.

Пред да се инсталира овој продукт, прочитајте информацијата за безбедност.

Les sikkerhetsinformasjonen (Safety Information) før du installerer dette produktet.

Przed zainstalowaniem tego produktu, należy zapoznać się z książką "Informacje dotyczące bezpieczeństwa" (Safety Information).

Antes de instalar este produto, leia as Informações sobre Segurança.

Перед установкой продукта прочтите инструкции по технике безопасности.

Pred inštaláciou tohto zariadenia si pečítaje Bezpečnostné predpisy.

Pred namestitvijo tega proizvoda preberite Varnostne informacije.

Antes de instalar este producto, lea la información de seguridad.

Läs säkerhetsinformationen innan du installerar den här produkten.

© Copyright IBM Corp. 2010

**Important:**

Each caution and danger statement in this document is labeled with a number. This number is used to cross reference an English-language caution or danger statement with translated versions of the caution or danger statement in the *Safety Information* document.

For example, if a caution statement is labeled “Statement 1,” translations for that caution statement are in the *Safety Information* document under “Statement 1.”

Be sure to read all caution and danger statements in this document before you perform the procedures. Read any additional safety information that comes with the server or optional device before you install the device.

**Statement 1:**

**DANGER**

**Electrical current from power, telephone, and communication cables is hazardous.**

**To avoid a shock hazard:**

- **Do not connect or disconnect any cables or perform installation, maintenance, or reconfiguration of this product during an electrical storm.**
- **Connect all power cords to a properly wired and grounded electrical outlet.**
- **Connect to properly wired outlets any equipment that will be attached to this product.**
- **When possible, use one hand only to connect or disconnect signal cables.**
- **Never turn on any equipment when there is evidence of fire, water, or structural damage.**
- **Disconnect the attached power cords, telecommunications systems, networks, and modems before you open the device covers, unless instructed otherwise in the installation and configuration procedures.**
- **Connect and disconnect cables as described in the following table when installing, moving, or opening covers on this product or attached devices.**

| **To Connect:** | **To Disconnect:** |
|---|---|
| 1. Turn everything OFF. | 1. Turn everything OFF. |
| 2. First, attach all cables to devices. | 2. First, remove power cords from outlet. |
| 3. Attach signal cables to connectors. | 3. Remove signal cables from connectors. |
| 4. Attach power cords to outlet. | 4. Remove all cables from devices. |
| 5. Turn device ON. | |

**Statement 2:**

**CAUTION:**
**When replacing the lithium battery, use only IBM Part Number 33F8354 or an equivalent type battery recommended by the manufacturer. If your system has a module containing a lithium battery, replace it only with the same module type made by the same manufacturer. The battery contains lithium and can explode if not properly used, handled, or disposed of.**

*Do not:*

- **Throw or immerse into water**
- **Heat to more than 100°C (212°F)**
- **Repair or disassemble**

**Dispose of the battery as required by local ordinances or regulations.**

**Statement 3:**

**CAUTION:**
**When laser products (such as CD-ROMs, DVD drives, fiber optic devices, or transmitters) are installed, note the following:**

- **Do not remove the covers. Removing the covers of the laser product could result in exposure to hazardous laser radiation. There are no serviceable parts inside the device.**
- **Use of controls or adjustments or performance of procedures other than those specified herein might result in hazardous radiation exposure.**

**DANGER**

**Some laser products contain an embedded Class 3A or Class 3B laser diode. Note the following.**

**Laser radiation when open. Do not stare into the beam, do not view directly with optical instruments, and avoid direct exposure to the beam.**

Class 1 Laser Product
Laser Klasse 1
Laser Klass 1
Luokan 1 Laserlaite
Appareil À Laser de Classe 1

**Statement 4:**

≥ 18 kg (39.7 lb)

≥ 32 kg (70.5 lb)

≥ 55 kg (121.2 lb)

**CAUTION:**
**Use safe practices when lifting.**

**Statement 5:**

**CAUTION:**
**The power control button on the device and the power switch on the power supply do not turn off the electrical current supplied to the device. The device also might have more than one power cord. To remove all electrical current from the device, ensure that all power cords are disconnected from the power source.**

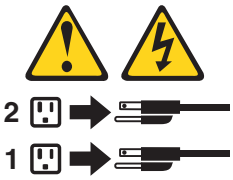

**Statement 8:**

**CAUTION:**
**Never remove the cover on a power supply or any part that has the following label attached.**

**Hazardous voltage, current, and energy levels are present inside any component that has this label attached. There are no serviceable parts inside these components. If you suspect a problem with one of these parts, contact a service technician.**

**Statement 12:**

**CAUTION:**
**The following label indicates a hot surface nearby.**

**Statement 26:**

**CAUTION:**
**Do not place any object on top of rack-mounted devices.**

This server is suitable for use on an IT power-distribution system whose maximum phase-to-phase voltage is 240 V under any distribution fault condition.

# Chapter 1. The System x3620 M3 Type 7376 server

This *Installation and User's Guide* contains instructions for setting up your IBM® System x3620 M3 Type 7376 server, instructions for installing optional devices, and instructions for starting and configuring the server. For diagnostic and troubleshooting information, see the *Problem Determination and Service Guide* that is on the IBM *Documentation* CD.

The IBM System x3620 M3 Type 7376 server is a 2-U[1]-high server that is ideally suited for networking environments that require superior microprocessor performance, efficient memory management, and flexibility.

Performance, ease of use, reliability, and expansion capabilities were key considerations in the design of the server. These design features make it possible for you to customize the system hardware to meet your needs today and provide flexible expansion capabilities for the future.

The server comes with a limited warranty. For information about the terms of the warranty, see the printed *Warranty Information* document that comes with your server.

The server contains IBM Enterprise X-Architecture® technologies, which help increase performance and reliability. For more information, see “What your server offers” on page 8 and “Reliability, availability, and serviceability features” on page 11.

You can obtain up-to-date information about the server and other IBM server products at http://www.ibm.com/systems/x/. At http://www.ibm.com/support/mysupport/, you can create a personalized support page by identifying IBM products that are of interest to you. From this personalized page, you can subscribe to weekly e-mail notifications about new technical documents, search for information and downloads, and access various administrative services.

If you participate in the IBM client reference program, you can share information about your use of technology, best practices, and innovative solutions; build a professional network; and gain visibility for your business. For more information about the IBM client reference program, see http://www.ibm.com/ibm/clientreference/.

The server comes with four 3.5-inch SATA simple-swap or eight 3.5-inch SAS/SATA hot-swap hard disk drive bays.

1. Racks are measured in vertical increments of 1.75 inches each. Each increment is called a “U”. A 1-U-high device is 1.75 inches tall.

© Copyright IBM Corp. 2010

The following illustration shows a server model with eight SAS/SATA hot-swap hard disk drive bays.

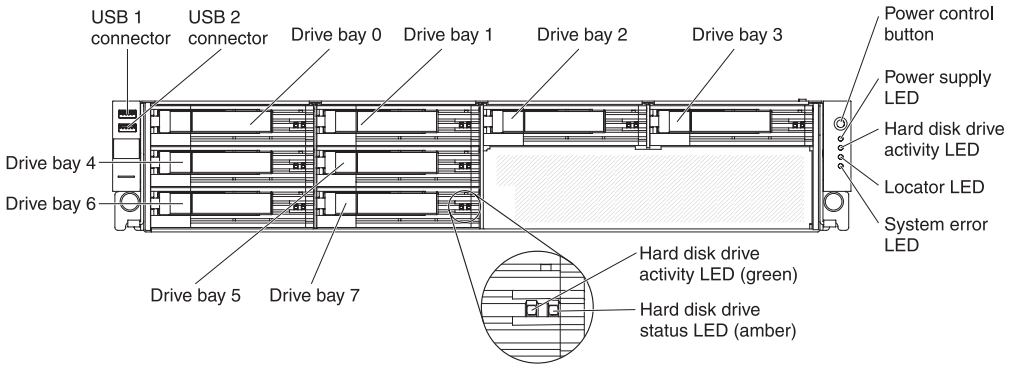


The following illustration shows a server model with four SATA simple-swap hard disk drive bays.

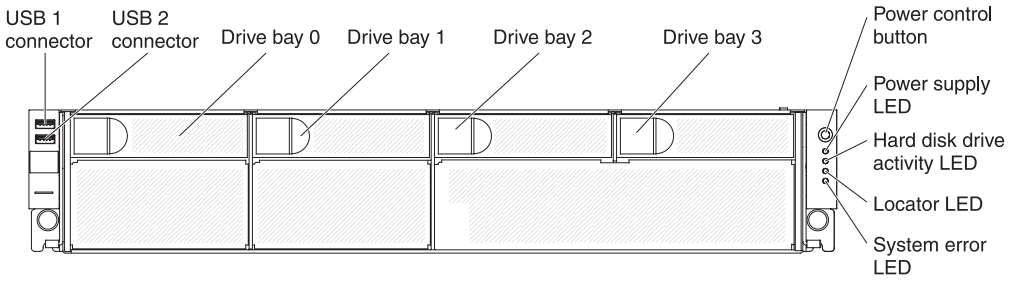


**Note:** The illustrations in this document might differ slightly from your hardware.

If firmware and documentation updates are available, you can download them from the IBM Web site. The server might have features that are not described in the documentation that comes with the server, and the documentation might be updated occasionally to include information about those features, or technical updates might be available to provide additional information that is not included in the server documentation. To check for updates, complete the following steps.

**Note:** Changes are made periodically to the IBM Web site. Procedures for locating firmware and documentation might vary slightly from what is described in this document.

1. Go to http://www.ibm.com/systems/support/.
2. Under **Product support**, click **System x**.
3. Under **Popular links**, click **Software and device drivers** for firmware updates, or click **Publications lookup** for documentation updates.

Record information about the server in the following table.

| | |
|---|---|
| **Product name** | IBM System x3620 M3 server |
| **Machine type** | 7376 |
| **Model number** | _____ |
| **Serial number** | _____ |

The model number and serial number are on the pull-out label on the bezel, as shown in the following illustration.

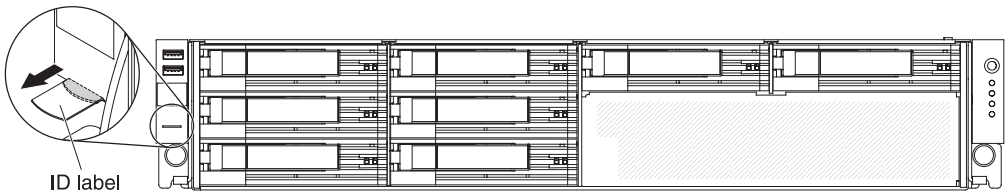


You can download an IBM *ServerGuide Setup and Installation* CD to help you configure the hardware, install device drivers, and install the operating system. For more information, see “Using the ServerGuide Setup and Installation CD” on page 90.

For a list of supported optional devices for the server, see http://www.ibm.com/servers/eserver/serverproven/compat/us/.

See the *Rack Installation Instructions* document on the IBM *Documentation* CD for complete rack installation and removal instructions.

## The IBM Documentation CD

The IBM *Documentation* CD contains documentation for your server in Portable Document Format (PDF) and includes the IBM Documentation Browser to help you find information quickly.

### Hardware and software requirements

The IBM *Documentation* CD requires the following minimum hardware and software:

- Microsoft Windows XP, Windows 2000, or Red Hat Linux
- 100 MHz microprocessor
- 32 MB of RAM
- Adobe Acrobat Reader 3.0 (or later) or xpdf, which comes with Linux operating systems

### Using the Documentation Browser

Use the Documentation Browser to browse the contents of the CD, read brief descriptions of the documents, and view documents, using Adobe Acrobat Reader or xpdf. The Documentation Browser automatically detects the regional settings in use in your server and displays the documents in the language for that region (if available). If a document is not available in the language for that region, the English-language version is displayed.

Use one of the following procedures to start the Documentation Browser:

- If Autostart is enabled, insert the CD into the CD or DVD drive. The Documentation Browser starts automatically.
- If Autostart is disabled or is not enabled for all users, use one of the following procedures:
  - If you are using a Windows operating system, insert the CD into the CD or DVD drive and click **Start --> Run**. In the **Open** field, type

    ```
    e:\win32.bat
    ```

    where *e* is the drive letter of the CD or DVD drive, and click **OK**.
  - If you are using Red Hat Linux, insert the CD into the CD or DVD drive; then, run the following command from the /mnt/cdrom directory:

```
sh runlinux.sh
```

Select your server from the **Product** menu. The **Available Topics** list displays all the documents for your server. Some documents might be in folders. A plus sign (+) indicates each folder or document that has additional documents under it. Click the plus sign to display the additional documents.

When you select a document, a description of the document appears under **Topic Description**. To select more than one document, press and hold the Ctrl key while you select the documents. Click **View Book** to view the selected document or documents in Acrobat Reader or xpdf. If you selected more than one document, all the selected documents are opened in Acrobat Reader or xpdf.

To search all the documents, type a word or word string in the **Search** field and click **Search**. The documents in which the word or word string appears are listed in order of the most occurrences. Click a document to view it, and press Crtl+F to use the Acrobat search function, or press Alt+F to use the xpdf search function within the document.

Click **Help** for detailed information about using the Documentation Browser.

## Related documentation

This *Installation and User's Guide* contains general information about the server, including how to set up the server, how to install supported optional devices, and how to configure the server. The following documentation also comes with the server:

- *Warranty Information*

  This printed document contains the warranty terms and a pointer to the IBM Statement of Limited Warranty on the IBM Web site.
- *Safety Information*

  This document is in PDF on the IBM *Documentation* CD. It contains translated caution and danger statements. Each caution and danger statement that appears in the documentation has a number that you can use to locate the corresponding statement in your language in the *Safety Information* document.
- *Rack Installation Instructions*

  This document contains instructions for installing the server in a rack.
- *Problem Determination and Service Guide*

  This document is in PDF on the IBM *Documentation* CD. It contains information to help you solve problems yourself, and it contains information for service technicians.
- *Environmental Notices and User Guide*

  This document is in PDF on the IBM *Documentation* CD. It contains translated environmental notices.
- *IBM License Agreement for Machine Code*

  This document is in PDF on the IBM *Documentation* CD. It provides translated versions of the *IBM License Agreement for Machine Code* for your product.
- *IBM MCP Linux License Information and Attributions*

  This document is in PDF on the IBM *Documentation* CD. It provides information about the open-source notices.

Depending on the server model, additional documentation might be included on the IBM *Documentation* CD.

The System x® and xSeries® Tools Center is an online information center that contains information about tools for updating, managing, and deploying firmware, device drivers, and operating systems. The System x and BladeCenter Tools Center is at http://publib.boulder.ibm.com/infocenter/toolsctr/v1r0/index.jsp.

The server might have features that are not described in the documentation that comes with the server. The documentation might be updated occasionally to include information about those features, or technical updates might be available to provide additional information that is not included in the server documentation. These updates are available from the IBM Web site. To check for updated documentation and technical updates, complete the following steps.

**Note:** Changes are made periodically to the IBM Web site. The actual procedure might vary slightly from what is described in this document.

1. Go to http://www.ibm.com/systems/support/.
2. Under **Product support**, click **System x**.
3. Under **Popular links**, click **Publications lookup**.
4. From the **Product family** menu, select **System x3620 M3** and click **Continue**.

## Notices and statements in this document

The caution and danger statements in this document are also in the multilingual *Safety Information* document, which is on the *Documentation* CD. Each statement is numbered for reference to the corresponding statement in your language in the *Safety Information* document.

The following notices and statements are used in this document:

- **Note:** These notices provide important tips, guidance, or advice.
- **Important:** These notices provide information or advice that might help you avoid inconvenient or problem situations.
- **Attention:** These notices indicate potential damage to programs, devices, or data. An attention notice is placed just before the instruction or situation in which damage might occur.
- **Caution:** These statements indicate situations that can be potentially hazardous to you. A caution statement is placed just before the description of a potentially hazardous procedure step or situation.
- **Danger:** These statements indicate situations that can be potentially lethal or extremely hazardous to you. A danger statement is placed just before the description of a potentially lethal or extremely hazardous procedure step or situation.

## Features and specifications

The following information is a summary of the features and specifications of the server. Depending on the model, some features might not be available, or some specifications might not apply.

Racks are marked in vertical increments of 4.45 cm (1.75 inches). Each increment is referred to as a unit, or “U.” A 1-U-high device is 1.75 inches tall.

**Notes:**

1. Power consumption and heat output vary depending on the number and type of optional features that are installed and the power-management optional features that are in use.
2. The sound levels were measured in controlled acoustical environments according to the procedures specified by the American National Standards Institute (ANSI) S12.10 and ISO 7779 and are reported in accordance with ISO 9296. Actual sound-pressure levels in a given location might exceed the average values stated because of room reflections and other nearby noise sources. The declared sound-power levels indicate an upper limit, below which a large number of computers will operate.

*Table 1. Features and specifications*

**Microprocessor:**
- Supports multi-core Intel Xeon microprocessors, with integrated memory controller and Quick Path Interconnect (QPI) architecture
- Designed for LGA 1366 socket
- Scalable up to six cores
- 32 KB instruction cache, 32 KB data cache, and 8 MB L3 cache that is shared among the cores
- Support for Intel Extended Memory 64 Technology (EM64T)

**Note:**
- Do not install an Intel Xeon™ 5500 series microprocessor and an Xeon™ 5600 series microprocessor in the same server.
- Use the Setup utility to determine the type and speed of the microprocessors.
- For a list of supported microprocessors, see http://www.ibm.com/servers/eserver/serverproven/compat/us/.

**Memory:**
- Twelve DIMM connectors (six per microprocessor)
- Minimum: 1 GB DIMM per microprocessor
- Maximum: 96 GB
- Type: PC3-10600-999 (single-rank or double-rank) 800, 1066, and 1333 MHz, ECC, DDR3 registered SDRAM DIMMs only
- Sizes: 1 GB single-rank, 2 GB single-rank or dual-rank, 4 GB dual-rank, and 8 GB dual-rank
- Chipkill supported

**Optical drive (optional):**
- DVD-ROM
- Multi-burner

**Expansion bays (depending on the model):**
- Eight 3.5-inch SAS/SATA hot-swap hard disk drive bays
- Four 3.5-inch SATA simple-swap hard disk drive bays

**PCI Expansion slots:** Supports three PCI expansion slots:
- One PCIe2 Express x16 slot (16, 8, 4, 1)
- One PCIe2 Express x16 slot (4)
- One PCIe2 Express x8 slot (8)

**Integrated functions:**
- Integrated management module (IMM), which provides service processor control and monitoring functions, video controller, and (when the optional virtual media key is installed) remote keyboard, video, mouse, and remote hard disk drive capabilities
- Integrated SATA controller
- Six-port Serial ATA (SATA) controller
- Serial over LAN (SOL) and serial redirection over Telnet or Secure Shell (SSH)
- One systems-management RJ-45 10/100 Ethernet interface for connection to a dedicated systems-management network
- Support for remote management presence through an optional virtual media key
- One Intel dual-port 10/100/1000 Ethernet controller with Wake on LAN support
- One serial port, shared with the integrated management module (IMM)
- Five Universal Serial Bus (USB) ports (two on front, two on rear of server, and one internal for an optional USB flash device)
- One video port on rear of server
  **Note:** Maximum video resolution is 1600 x 1200 at 85 Hz.
- Support for hypervisor function through an optional USB flash device

**Note:** In messages and documentation, the term *service processor* refers to the integrated management module (IMM).

**Video controller:**
- Matrox G200 video on system board
- Compatible with SVGA and VGA
- DDR2-250MHz SDRAM video memory controller
- Video memory is not expandable
- Avocent digital video compression

**RAID (depending on the model):**
- Software RAID capabilities that support RAID levels 0 and 1
- ServeRAID-BR10il v2 SAS/SATA adapter that provides RAID levels 0, 1, and 1E
- ServeRAID-M1015 SAS/SATA adapter that provides RAID levels 0, 1, and 10 with optional RAID 5/50 and SED (Self Encrypting Drive) upgrade
- ServeRAID-M5014 SAS/SATA adapter that provides RAID levels 0, 1, 5, 10, and 50 with and RAID 6/60 and SED upgrade
- ServeRAID-M5015 SAS/SATA adapter that provides RAID levels 0, 1, 5, 10, and 50 with optional RAID 6/60 and SED upgrade

**Notes:**
1. When you enable software RAID on simple-swap models of the server, you will no longer be able to use the IBM Director, Dynamic System Analysis (DSA), and ServerGuide tools to configure, diagnose, or update hard drives on simple-swap models. However, you will still be able to use these tools to configure or diagnose other simple-swap server model features and components.
2. ServeRAID-BR10il v2 controller is installed in a PCI Express x8 mechanical slot (x4 electrical); however, the controller runs at x4 bandwidth

**Environment:**
- Air temperature:
  - Server on: 10°C to 35°C (50°F to 95°F); altitude: 0 to 915 m (3000 ft).
  - Server on: 10°C to 32°C (50°F to 90°F); altitude: 915 m (3000 ft) to 2134 m (7000 ft).
  - Server on: 10°C to 28°C (50°F to 83°F); altitude: 2134 m (7000 ft) to 3050 m (10000 ft).
  - Server off: 5°C to 45°C (41°F to 113°F)
  - Shipping: -40°C to 60°C (-40°F to 140°F)
- Humidity:
  - Server on/off: 20% to 80%; maximum dew point: 21°C; maximum rate of change: 5 °C/hr
  - Shipment: 8% to 80%; maximum dew point: 27°C
- Particulate contamination:

  **Attention:** Airborne particulates and reactive gases acting alone or in combination with other environmental factors such as humidity or temperature might pose a risk to the server. For information about the limits for particulates and gases, see “Particulate contamination” on page 109.

*Table 1. Features and specifications (continued)*

| | | |
|---|---|---|
| **Electrical input with hot-swap ac power supplies:**<br>• Sine-wave input (50 - 60 Hz) required<br>• Input voltage range automatically selected<br>• Input voltage low range:<br>– Minimum: 100 V ac<br>– Maximum: 127 V ac<br>• Input voltage high range:<br>– Minimum: 200 V ac<br>– Maximum: 240 V ac<br>• Input kilovolt-amperes (kVA) approximately:<br>– Minimum: 0.12 kVA<br>– Maximum: 0.78 kVA | **Size:**<br>• 2U<br>• Height: 86.5 mm (3.406 in.)<br>• Depth:<br>– EIA flange to rear: 719.39 mm (28.32 in.)<br>– Overall: 749.39 mm (29.5 in.)<br>• Width:<br>– With top cover: 447 mm (17.598 in.)<br>– With front bezel: 487.995 mm (19.212 in.)<br>• Weight: approximately 16.30 kg (35.94 lb) to 22.45 kg ( 49.50 lb) depending on your configuration<br><br>**System fans:** Up to four<br><br>**Hot-swap power supplies:**<br>675 watts (100 - 240 V ac)<br>• Minimum: One<br>• Maximum: Two - provide redundant power | **Acoustical noise emissions:**<br>• Declared sound power, idle: 6.6 bel<br>• Declared sound power, operating: 6.6 bel<br><br>**Heat output:**Approximate heat output:<br>• Minimum configuration: 663 Btu per hour (194 watts)<br>• Maximum configuration: 2305 Btu per hour (675 watts) |

## What your server offers

The server uses the following features and technologies:

- **UEFI-compliant server firmware**

  IBM System x Server Firmware offers several features, including Unified Extensible Firmware Interface (UEFI) 2.1 compliance, Active Energy Manager technology, enhanced RAS capabilities, and BIOS compatibility support. UEFI replaces the basic input/output system (BIOS) and defines a standard interface between the operating system, platform firmware, and external devices. UEFI-compliant System x servers are capable of booting UEFI-compliant operating systems, BIOS-based operating systems, and BIOS-based adapters as well as UEFI-compliant adapters.

  **Note:** The server does not support DOS.

- **Integrated management module**

  The integrated management module (IMM) combines service processor functions, video controller, and (when an optional virtual media key is installed) remote presence function in a single chip. The IMM provides advanced service-processor control, monitoring, and alerting function. If an environmental condition exceeds a threshold or if a system component fails, the IMM lights LEDs to help you diagnose the problem, records the error in the event log, and alerts you to the problem. Optionally, the IMM also provides a virtual presence capability for remote server management capabilities. The IMM provides remote server management through industry-standard interfaces:

  – Intelligent Platform Management Interface (IPMI) version 2.0
  – Simple Network Management Protocol (SNMP) version 3
  – Common Information Model (CIM)
  – Web browser

- **Remote presence capability and blue-screen capture**

The optional virtual media key is required to enable the remote presence and blue-screen capture features. The remote presence feature provides the following functions:

- Remotely viewing video with graphics resolutions up to 1600 x 1200 at 85 Hz, regardless of the system state
- Remotely accessing the server, using the keyboard and mouse from a remote client
- Mapping the CD or DVD drive, diskette drive, and USB flash drive on a remote client, and mapping ISO and diskette image files as virtual drives that are available for use by the server
- Uploading a diskette image to the IMM memory and mapping it to the server as a virtual drive

The blue-screen capture feature captures the video display contents before the IMM restarts the server when the IMM detects an operating-system hang condition. A system administrator can use the blue-screen capture to assist in determining the cause of the hang condition.

- **IBM Dynamic System Analysis Preboot diagnostics programs**

  The Dynamic System Analysis (DSA) Preboot diagnostics programs are stored on the integrated USB memory. It collects and analyzes system information to aid in diagnosing server problems. The diagnostic programs collect the following information about the server:

  - System configuration
  - Network interfaces and settings
  - Installed hardware
  - Light path diagnostics status
  - Service processor status and configuration
  - Vital product data, firmware, and UEFI configuration
  - Hard disk drive health
  - RAID controller configuration
  - Event logs for ServeRAID controllers and service processors

  The diagnostic programs create a merged log that includes events from all collected logs. The information is collected into a file that you can send to IBM service and support. Additionally, you can view the information locally through a generated text report file. You can also copy the log to a removable media and view the log from a Web browser.

  For additional information about DSA Preboot diagnostics, see the *Problem Determination and Service Guide* on the IBM *Documentation* CD

- **IBM Systems Director**

  IBM Systems Director is a workgroup-hardware-management tool that you can use to centrally manage System x and xSeries servers. For more information, see the IBM Systems Director documentation on the *IBM Systems Director* CD.

- **Active Energy Manager**

  The Active Energy Manager solution is an IBM Systems Director extension that measures and reports server power consumption as it occurs. This enables you to monitor power consumption in correlation to specific software application programs and hardware configurations. You can obtain the measurement values through the systems-management interface and view them, using IBM Systems Director. For more information, see the IBM Director documentation on the *IBM Systems Director* CD, or see http://www.ibm.com/systems/management/director/extensions/actengmrg.html.

- **IBM X-Architecture technology**

  IBM X-Architecture technology combines proven, innovative IBM designs to make your Intel-processor-based server powerful, scalable, and reliable. For more information, see http://www.ibm.com/servers/eserver/xseries/xarchitecture/enterprise/index.html.

  – **Active Memory™**

    The Active Memory™ feature improves the reliability of memory through memory mirroring. Memory mirroring stores data in two pairs of DIMMs simultaneously.

  – **Large system-memory capacity**

    The memory bus supports up to 96 GB of system memory. The memory controller supports error correcting code (ECC) for up to 12 industry-standard PC3-10600R-999 (single-rank or dual-rank), 800, 1066, and 1333 MHz, DDR3 (third-generation double-data-rate), registered, synchronous dynamic random access memory (SDRAM) dual inline memory modules (DIMMs).

- **IBM *ServerGuide Setup and Installation* CD**

  The *ServerGuide Setup and Installation* CD, which you can download from the Web, provides programs to help you set up the server and install a Windows operating system. The ServerGuide program detects installed optional hardware devices and provides the correct configuration programs and device drivers. For more information about the *ServerGuide Setup and Installation* CD, see “Using the ServerGuide Setup and Installation CD” on page 90.

- **Integrated network support**

  The server comes with one integrated Intel Gigabit Ethernet controller, which supports connection to a 10 Mbps, 100 Mbps, or 1000 Mbps network. For more information, see “Configuring the Gigabit Ethernet controller” on page 95.

- **Large data-storage and hot-swap capability**

  The server supports up to four 3.5-inch SATA simple-swap or eight 3.5-inch SAS/SATA hot-swap hard disk drives (depending on the model). With the hot-swap feature, you can add, remove, or replace hard disk drives without turning off the server.

- **Light path diagnostics**

  Light path diagnostics provides LEDs to help you diagnose problems. For more information, see the section about light path diagnostics in the *Problem Determination and Service Guide*.

- **PCI adapter capabilities**

  The server supports up to three PCI expansion slots. For more information, see “Installing an adapter” on page 40.

- **Memory mirroring**

  Memory mirroring improves the availability of memory by writing information to the main memory and redundant locations in a mirrored pair of DIMMs.

- **Redundant power capabilities**

  The server supports up to two 675-watt ac power supplies, which provide redundancy and hot-swap capability for a typical configuration. If the maximum load on the server is less than 675 watts and a problem occurs with one of the power supplies, the other power supply can meet the power requirements.

  **Note:** If the maximum load on the server is greater than 675 watts and a problem occurs with one of the power supplies, Active Energy Manager can act to minimize the load somewhat so that the server can function with the remaining power supply.

- **RAID support**

  Depending on the model, your IBM System x3620 M3 server implements redundant array of independent disks (RAID) through software or hardware.

  A ServeRAID adapter provides hardware RAID support to create configurations. Depending on the server model, your server may come with a standard RAID adapter that provides RAID levels 0, 1, 1E, or above. An optional RAID adapter is available for purchase.

  For server models that come with simple-swap hard disk drives, the servers support software RAID levels 0 and 1 via the system firmware.

  **Note:** When you enable software RAID on simple-swap models of the server, you will no longer be able use the IBM Director, Dynamic System Analysis (DSA), and ServerGuide tools to configure, diagnose, or update hard drives on simple-swap models. However, you will still be able use these tools to configure or diagnose other simple-swap server model features and components.
- **Systems-management capabilities**

  The server contains an integrated management module (IMM) which enables you to manage the functions of the server locally and remotely. The addition of the optional IBM Virtual Media Key provides remote presence and blue-screen capture capability. The IMM also provides system monitoring, event recording, and dial-out alert capability.

## Reliability, availability, and serviceability features

Three important computer design features are reliability, availability, and serviceability (RAS). The RAS features help to ensure the integrity of the data that is stored in the server, the availability of the server when you need it, and the ease with which you can diagnose and repair problems.

The server has the following RAS features:
- Automatic error retry and recovery
- Automatic restart after a power failure
- Built-in monitoring for fan, power, temperature, voltage, and power-supply redundancy
- Cable-presence detection on most connectors
- Chipkill memory protection
- Dual redundant UEFI server firmware images
- Error codes and messages
- Error correcting code (ECC) L2 cache and system memory
- Cooling fans with speed-sensing capability
- Hot-swap hard disk drives
- Operator information panel
- Integrated management module (service processor)
- Memory mirroring
- Menu-driven setup, system configuration, and redundant array of independent disks (RAID) configuration programs
- Parity checking or CRC checking on the serially-attached SCSI (SAS) bus and PCI buses
- Power management: compliance with Advanced Configuration and Power Interface (ACPI)
- Power-on self-test (POST)
- Predictive Failure Analysis (PFA) alerts on memory, SAS/SATA hard disk drives, fans, and power supplies
- Redundant Ethernet capabilities with failover support
- Redundant hot-swap power supplies

- Remote system problem-determination support
- Standby voltage for systems-management features and monitoring
- Startup (boot) from LAN through Preboot Execution Environment (PXE) boot agent utility or Dynamic Host Configuration Protocol/Boot Protocol (DHCP/BOOTP)
- System auto-configuring from the configuration menu
- System error logging (POST and service processor)
- Systems-management monitoring through the Inter-Integrated Circuit ($I^2C$) bus
- Upgradeable POST, UEFI, diagnostics, service processor microcode, and read-only memory (ROM) resident code, locally or over the LAN
- Vital product data (VPD) on microprocessors, system board, power supplies, and SAS (hot-swap-drive) backplane
- Wake on LAN capability

## IBM Systems Director

IBM Systems Director is a platform-management foundation that streamlines the way you manage physical and virtual systems in a heterogeneous environment. By using industry standards, IBM Systems Director supports multiple operating systems and virtualization technologies in IBM and non-IBM x86 platforms.

Through a single user interface, IBM Systems Director provides consistent views for viewing managed systems, determining how these systems relate to one another, and identifying their statuses, helping to correlate technical resources with business needs. A set of common tasks that are included with IBM Systems Director provides many of the core capabilities that are required for basic management, which means instant out-of-the-box business value. These common tasks include discovery, inventory, configuration, system health, monitoring, updates, event notification, and automation for managed systems.

The IBM Systems Director Web and command-line interfaces provide a consistent interface that is focused on driving these common tasks and capabilities:

- Discovering, navigating, and visualizing systems on the network with the detailed inventory and relationships to the other network resources
- Notifying users of problems that occur on systems and the ability to isolate the sources of the problems
- Notifying users when systems need updates and distributing and installing updates on a schedule
- Analyzing real-time data for systems and setting critical thresholds that notify the administrator of emerging problems
- Configuring settings of a single system and creating a configuration plan that can apply those setting to multiple systems
- Updating installed plug-ins to add new features and functions to the base capabilities
- Managing the life cycles of virtual resources

For more information about IBM Systems Director, see the documentation on the *IBM Systems Director* DVD that comes with the server and the IBM xSeries Systems Management Web page at http://www.ibm.com/systems/management/, which presents an overview of IBM Systems Management and IBM Systems Director.

## The Update*Xpress* System Pack Installer

The Update*Xpress* System Pack Installer detects supported and installed device drivers and firmware in the server and installs available updates. For additional information and to download the Update*Xpress* System Pack Installer, go to the System x and BladeCenter Tools Center at http://publib.boulder.ibm.com/infocenter/toolsctr/v1r0/index.jsp and click **UpdateXpress System Pack Installer**.

## Server controls, LEDs, and power

This section describes the controls and light-emitting diodes (LEDs) and how to turn the server on and off.

## Front view

The following illustration shows the controls, connectors, LEDs, and hard disk drive bays on the front of the server.

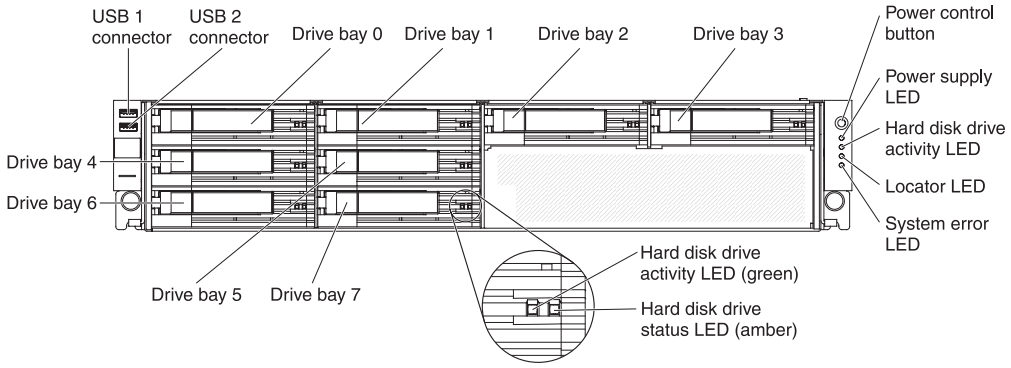


**USB connectors:** Connect a USB device, such as USB mouse or keyboard to either of these connectors.

**Hard disk drive activity LED:** This green LED is used on hot-swap SAS/SATA hard disk drives. Each hot-swap hard disk drive has an activity LED. When this LED is flashing, it indicates that the drive is in use.

**Hard disk drive status LED:** This amber LED is used on hot-swap SAS/SATA hard disk drives. Each hot-swap hard disk drive has a status LED. When this LED is lit, it indicates that the drive has failed. When this LED is flashing slowly (one flash per second), it indicates that the drive is being rebuilt as part of a RAID configuration. When the LED is flashing rapidly (three flashes per second), it indicates that the controller is identifying the drive.

**Operator information panel:** This panel contains the power control button and light-emitting diodes (LEDs).

**Power-control button and power-on LED:** Press this button to turn the server on and off manually or to wake the server from a reduced-power state. The states of the green power-on LED are as follows:

**Off:** AC power is not present, or the power supply or the LED itself has failed.

**Flashing rapidly (4 times per second):** The server is turned off and is not ready to be turned on. The power-control button is disabled. This will last approximately 20 to 40 seconds.

**Flashing slowly (once per second):** The server is turned off and is ready to be turned on. You can press the power-control button to turn on the server.

**Lit:** The server is turned on.

**Fading on and off:** The server is in a reduced-power state. To wake the server, press the power-control button or use the IMM Web interface. See “Logging on to the Web interface” on page 95 for information on logging on to the IMM Web interface.

**Hard disk drive activity LED:** When this LED is flashing, it indicates that the drive is in use.

**Hard disk drive status LED:** This amber LED is used on hot-swap SAS/SATA hard disk drives. Each hot-swap hard disk drive has a status LED. When this LED is lit, it indicates that the drive has failed. When this LED is flashing slowly (one flash per second), it indicates that the drive is being rebuilt as part of a RAID configuration. When the LED is flashing rapidly (three flashes per second), it indicates that the controller is identifying the drive.

**Locator LED:** Use this blue LED to visually locate the server among other servers. You can use IBM Systems Director to light this LED remotely. This LED is controlled by the IMM.

**System-error LED:** When this amber LED is lit, it indicates that a system error has occurred. This LED is controlled by the IMM.

The following illustration shows the control and LED for the optional optical drive on the front of the server.

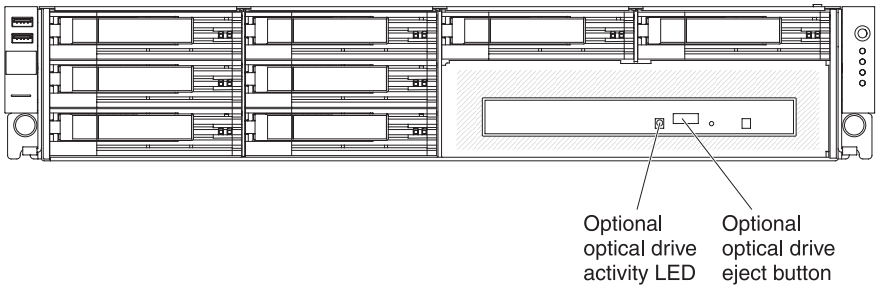


**Optional optical drive eject button:** Press this button to release a CD or DVD from the optional optical drive.

**Optional optical drive activity LED:** When this LED is lit, it indicates that the optional optical drive is in use.

## Rear view

The following illustration shows the connectors on the rear of the server.

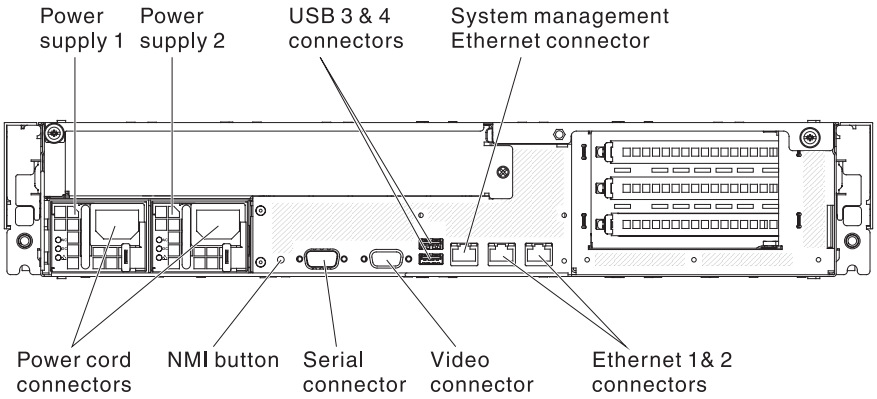


**Power-cord connector:** Connect the power cord to this connector.

**Note:** Power supply 1 is the default/primary power supply. If power supply 1 fails, you must replace it immediately.

**NMI button:** Press this button to force a nonmaskable interrupt to the microprocessor. You might have to use a pen or the end of a straightened paper clip to press the button. It allows you to blue screen the server and take a memory dump (use this button only when directed by the IBM service support).

**Serial connector:** Connect a 9-pin serial device to this connector. The serial port is shared with the integrated management module (IMM). The IMM can take control of the shared serial port to perform text console redirection and to redirect serial traffic, using Serial over LAN (SOL).

**Video connector:** Connect a monitor to this connector. The video connectors on the front and rear of the server can be used simultaneously.

**Note:** The maximum video resolution is 1600 x 1200 at 85 Hz.

**USB connectors:** Connect a USB device, such as USB mouse or keyboard to either of these connectors.

**Systems-management Ethernet connector:** Use this connector to connect the server to a network for systems-management information control. This connector is used only by the IMM.

**Ethernet connectors:** Use any of these connectors to connect the server to a network. When you use the Ethernet 1 connector, the network can be shared with the IMM through a single network cable.

The following illustration shows the LEDs on the rear of the server.

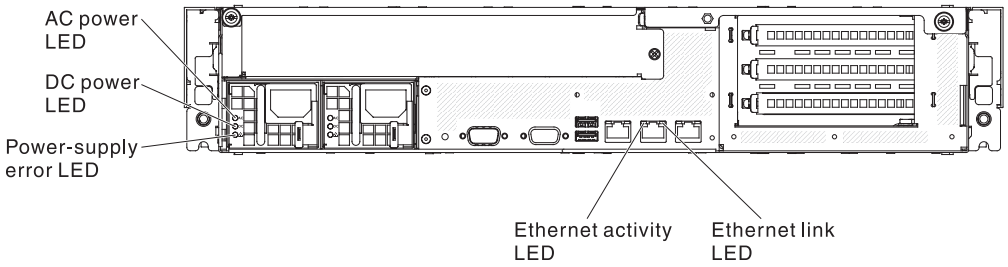


**Ethernet activity LEDs:** When these LEDs are lit, they indicate that the server is transmitting to or receiving signals from the Ethernet LAN that is connected to the Ethernet port.

**Ethernet link LEDs:** When these LEDs are lit, they indicate that there is an active link connection on the 10BASE-T, 100BASE-TX, or 1000BASE-TX interface for the Ethernet port.

**AC power LED:** Each hot-swap power supply has an ac power LED and a dc power LED. When the ac power LED is lit, it indicates that sufficient power is coming into the power supply through the power cord. During typical operation, both the ac and dc power LEDs are lit. For any other combination of LEDs, see "Power-supply LEDs."

**DC power LED:** Each hot-swap power supply has a dc power LED and an ac power LED. When the dc power LED is lit, it indicates that the power supply is supplying adequate dc power to the system. During typical operation, both the ac and dc power LEDs are lit. For any other combination of LEDs, see "Power-supply LEDs."

**Power-supply error LED:** When the power-supply error LED is lit, it indicates that the power supply has failed.

## Power-supply LEDs

The following illustration shows the power-supply LEDs on the rear of the server. For more information about solving power-supply problems, see the *Problem Determination and Service Guide*.

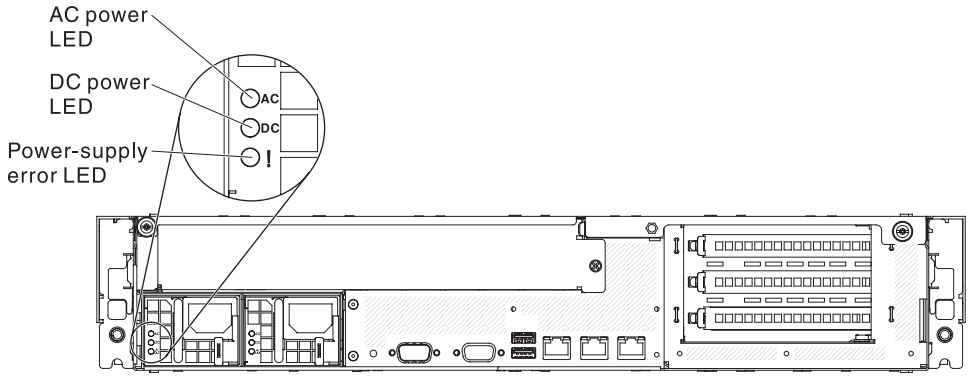


The following table describes the problems that are indicated by various combinations of the power-supply LEDs and suggested actions to correct the detected problems.

*Table 2. Power-supply LEDs*

| Power-supply LEDs | | | Description | Action | Notes |
|---|---|---|---|---|---|
| **AC (green)** | **DC (green)** | **Error (amber)** | | | |
| On | On | Off | Normal operation | | |
| Off | Off | Off | No ac power to the server or a problem with the ac power source | 1. Check the ac power to the server.<br>2. Make sure that the power cord is connected to a functioning power source.<br>3. Turn the server off and then turn the server back on.<br>4. If the problem remains, replace the power supply. | This is a normal condition when no ac power is present. |
| Off | Off | On | No ac power to the server or a problem with the ac power source and the power supply had detected an internal problem | 1. Replace the power supply.<br>2. Make sure that the power cord is connected to a functioning power source. | This happens only when a second power supply is providing power to the server. |
| Off | On | Off | Faulty power supply | Replace the power supply. | |
| Off | On | On | Faulty power supply | Replace the power supply. | |
| On | Off | Off | Power supply not fully seated, faulty system board, or faulty power supply | 1. Reseat the power supply.<br>2. Replace the power supply.<br>3. (Trained service technician only) Replace the system board. | Typically indicates that a power supply is not fully seated. |
| On | Off or Flashing | On | Faulty power supply | Replace the power supply. | |
| On | On | On | Power supply is faulty but still operational | Replace the power supply. | |

# Server power features

When the server is connected to a power source but is not turned on, the operating system does not run, and all core logic except for the integrated management module (IMM) is shut down; however, the server can respond to requests from the IMM, such as a remote request to turn on the server. The power-on LED flashes to indicate that the server is connected to power but is not turned on.

## Turning on the server

Approximately 40 seconds after the server is connected to power, the power-control button becomes active, and one or more fans might start running to provide cooling while the server is connected to power. You can turn on the server and start the operating system by pressing the power-control button.

The server can also be turned on in any of the following ways:

- If a power failure occurs while the server is turned on, the server will restart automatically when power is restored.

- If your operating system supports the Wake on LAN feature, the Wake on LAN feature can turn on the server.

**For 32-bit operating systems only:** Some memory is reserved for various system resources and is unavailable to the operating system. The amount of memory that is reserved for system resources depends on the operating system, the configuration of the server, and the configured PCI options.

## Turning off the server

When you turn off the server and leave it connected to power, the server can respond to requests from the IMM, such as a remote request to turn on the server. While the server remains connected to power, one or more fans might continue to run. To remove all power from the server, you must disconnect it from the power source.

Some operating systems require an orderly shutdown before you turn off the server. See your operating-system documentation for information about shutting down the operating system.

**Statement 5:**

**CAUTION:**
**The power control button on the device and the power switch on the power supply do not turn off the electrical current supplied to the device. The device also might have more than one power cord. To remove all electrical current from the device, ensure that all power cords are disconnected from the power source.**

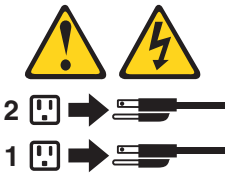


The server can be turned off in any of the following ways:

- You can turn off the server from the operating system, if your operating system supports this feature. After an orderly shutdown of the operating system, the server will be turned off automatically.
- You can press the power-control button to start an orderly shutdown of the operating system and turn off the server, if your operating system supports this feature.
- If the operating system stops functioning, you can press and hold the power-control button for more than 4 seconds to turn off the server.
- The IMM can turn off the server as an automatic response to a critical system failure.
- You can turn off the server through a request from the IMM.

# Chapter 2. Installing optional devices

This chapter provides detailed instructions for installing optional hardware devices in the server.

## Server components

The following illustrations show the major components in the server.

**Note:** The illustrations in this document might differ slightly from your hardware.

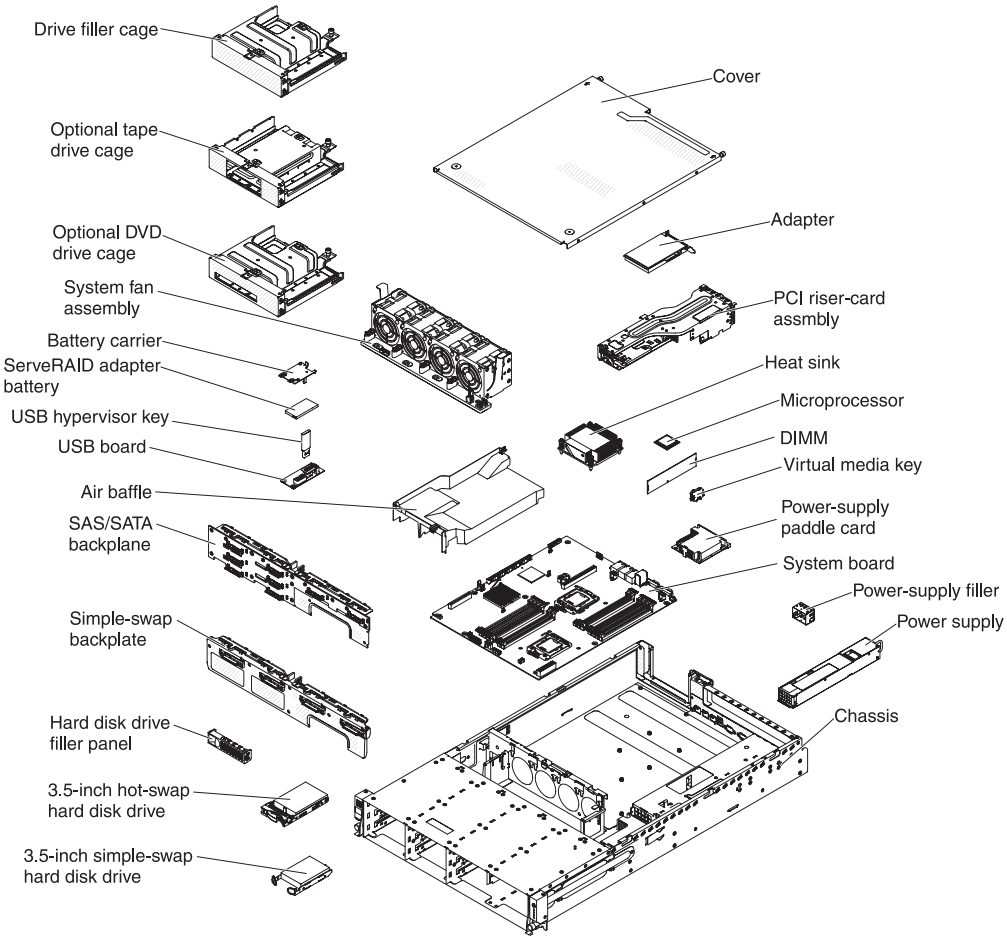


© Copyright IBM Corp. 2010

# System-board internal connectors

The following illustration shows the internal connectors on the system board.

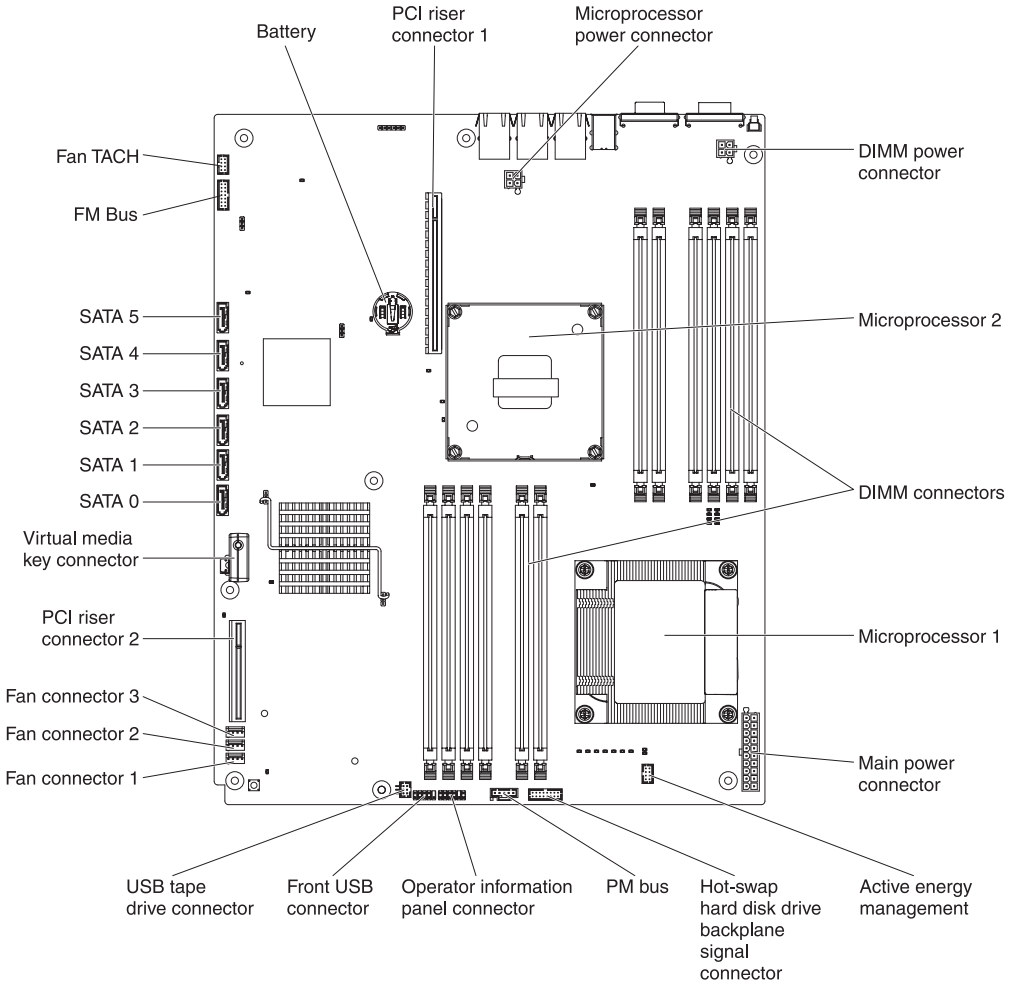

## System-board DIMM connectors

The following illustration shows the DIMM connectors on the system board.

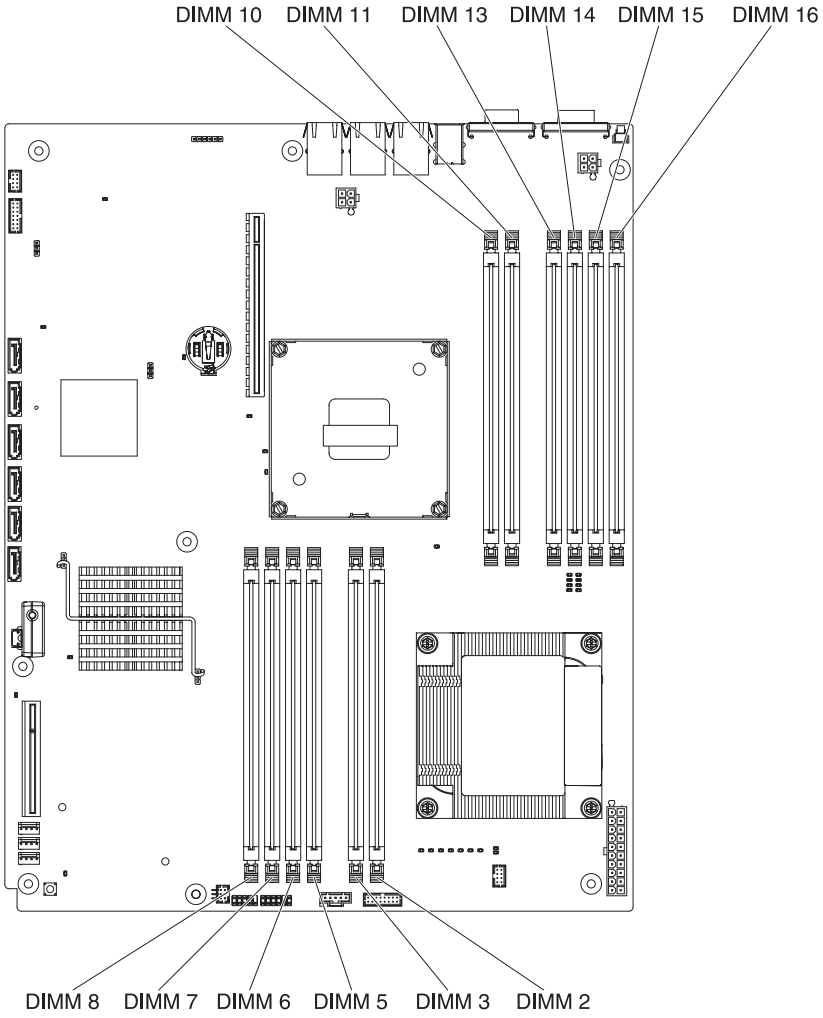

## System-board external connectors

The following illustration shows the external input/output connectors on the system board.

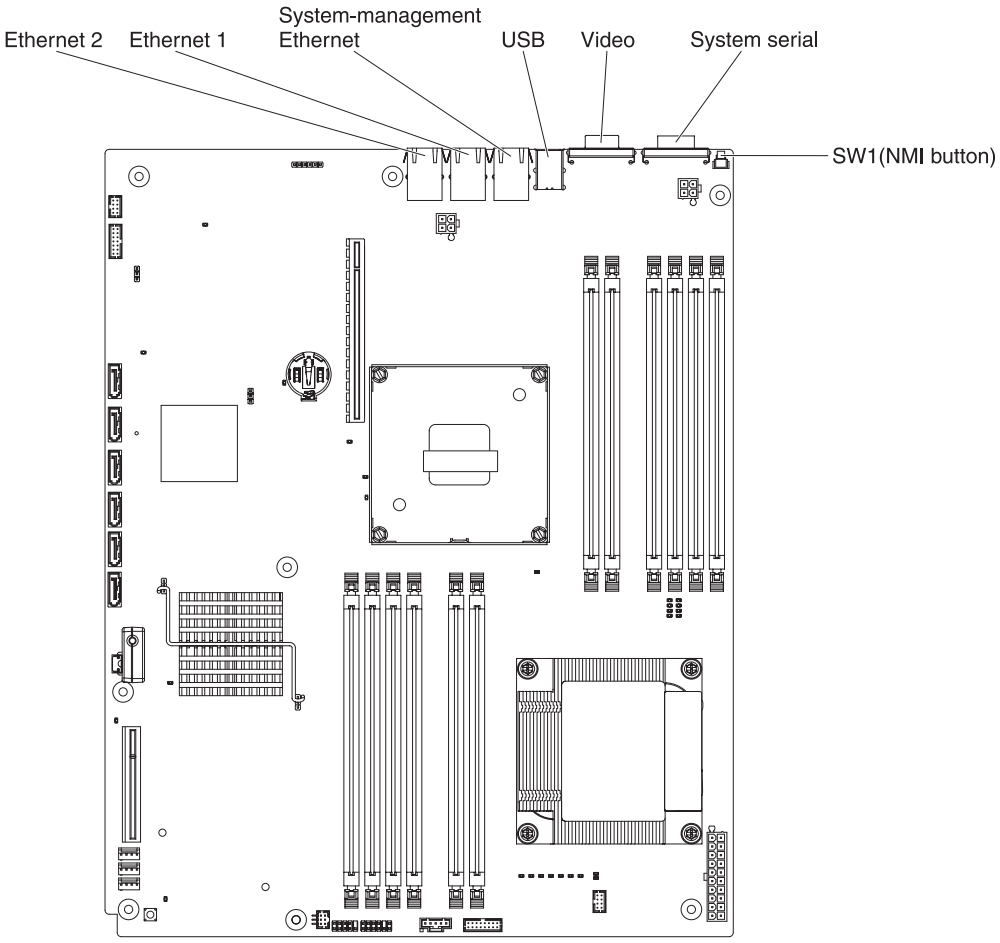

## System-board jumpers

This section describes the jumpers on the system board.

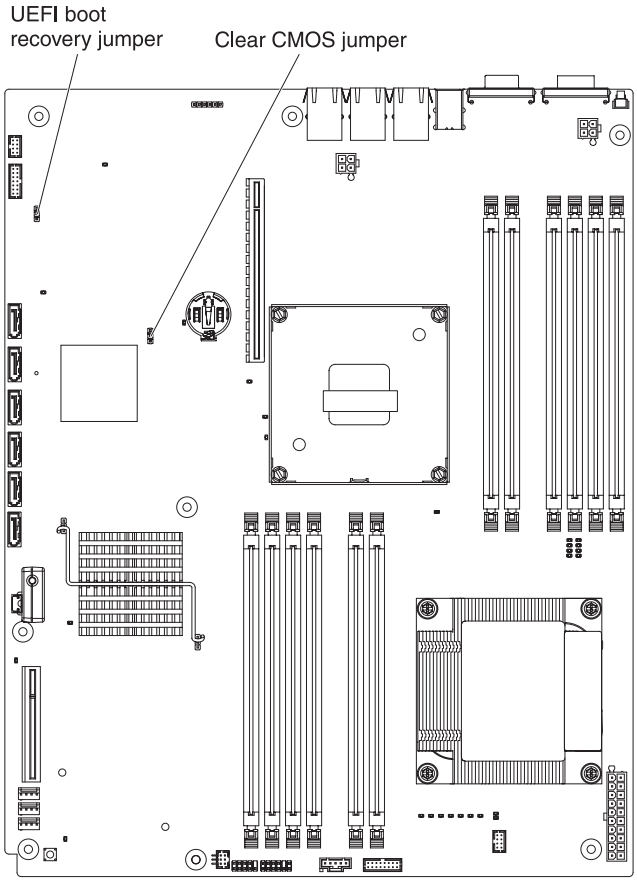


*Table 3. System board jumpers*

| Jumper number | Jumper name | Jumper setting |
|---|---|---|
| JP2 | Clear CMOS jumper | • Pins 1 and 2: Normal (default) - This keeps the CMOS data.<br>• Pins 2 and 3: This clears the CMOS data such as power-on password and loads the default UEFI settings. |
| JP3 | UEFI recovery jumper | • Pins 1 and 2: Normal (default) Loads the primary firmware ROM page.<br>• Pins 2 and 3: Loads the secondary (backup) firmware ROM page. |
| Notes:<br>• If no jumper is present, the server responds as if the pins are set to 1 and 2.<br>• Changing the position of the UEFI recovery jumper from pins 1 and 2 to pins 2 and 3 before the server is turned on sets the UEFI recovery process. Do not change the jumper pin position after the server is turned on. This can cause an unpredictable problem. | | |

**Important:**

1. Before you change any switch settings or move any jumpers, turn off the server; then, disconnect all power cords and external cables. (Review the information in “Safety” on page vii, “Installation guidelines” on page 28, “Handling static-sensitive devices” on page 30, and “Turning off the server” on page 18.)
2. Any system-board switch or jumper blocks that are not shown in the illustrations in this document are reserved.

# System-board LEDs

The following illustration shows the light-emitting diodes (LEDs) on the system board.

**Note:** Error LEDs remain lit only while the server is connected to power. If you disconnect power to the server, you can press and hold the light path diagnostics button to light the error LEDs on the system board.

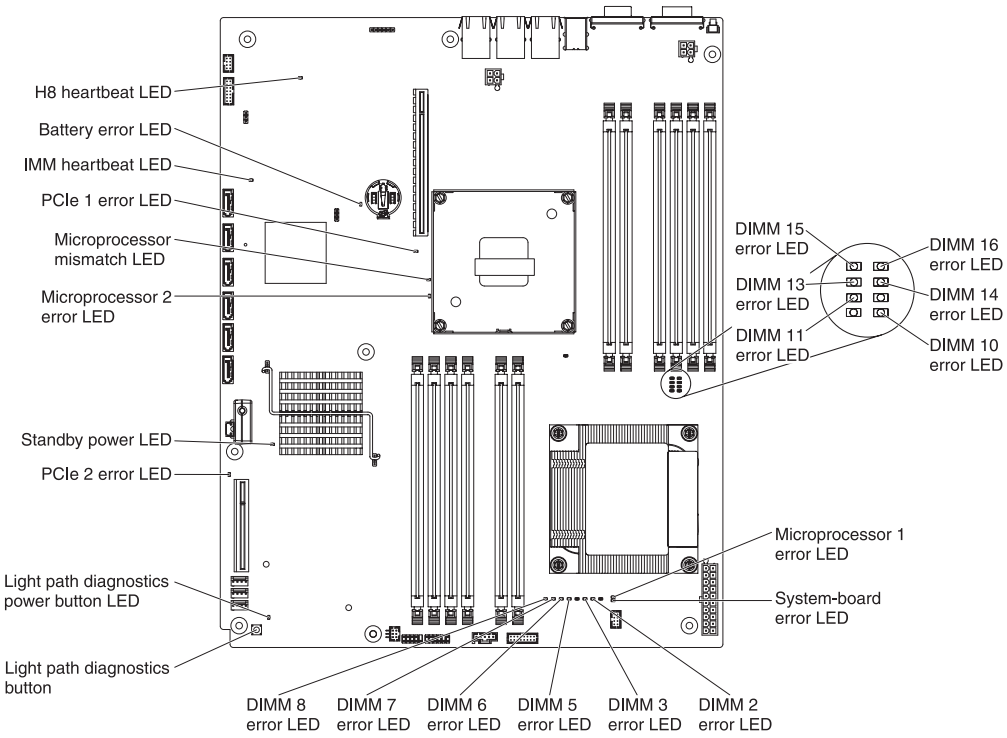


## System pulse LEDs

The following LEDs are on the system board and monitor the system power-on and power-off sequencing and boot progress (see “System-board LEDs” for the location of these LEDs).

*Table 4. System pulse LEDs*

| LED | Description | Action |
|---|---|---|
| Enclosure management heartbeat | Power-on and power-off sequencing. | 1. If the LED blinks at 1Hz, it is functioning properly and no action is necessary.<br>2. If the LED is not blinking, (trained service technician only) replace the system board. |

*Table 4. System pulse LEDs (continued)*

| LED | Description | Action |
|---|---|---|
| IMM heartbeat | IMM heartbeat boot process. | The following steps describe the different stages of the IMM heartbeat sequencing process.<br>1. When this LED is blinking fast (approximately 4Hz), this indicates, that the IMM code is in the loading process.<br>2. When this LED goes off momentarily, this indicates that the IMM code has loaded completely.<br>3. When this LED goes off momentarily and then starts blinking slowing (approximately 1Hz), this indicates that IMM is fully operational. You can now press the power-control button to power-on the server.<br>4. If this LED does not blink within 30 seconds of connecting a power source to the server, complete the following steps:<br>a. (Trained service technician only) use the IMM recovery jumper to recover the firmware (see “System-board jumpers” on page 23).<br>b. (Trained service technician only) replace the system board. |

## Fan board connectors

The following illustration shows the connectors on the fan board.

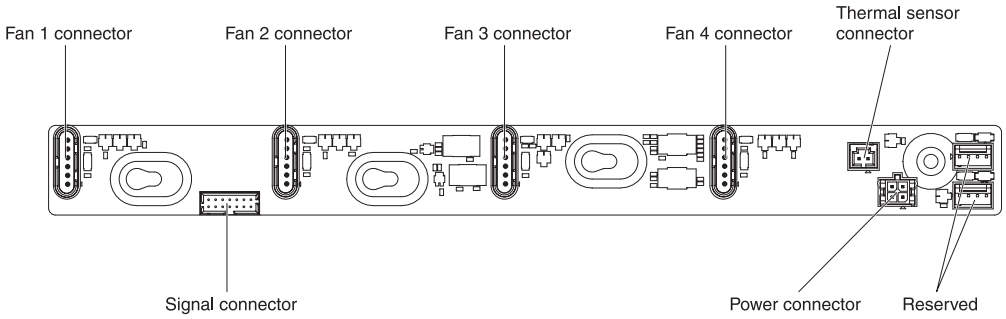


## PCI riser-card adapter connectors

The following illustration shows the connectors on the PCI riser cards for user-installable PCI adapters.

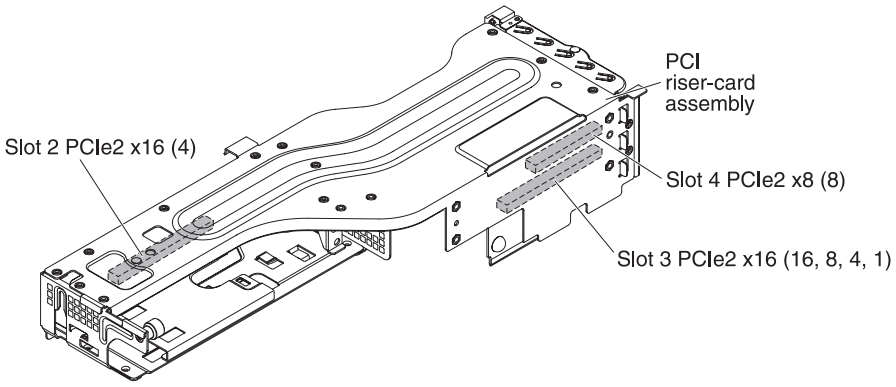

## Installation guidelines

Before you install optional devices, read the following information:

- Read the safety information that begins on page vii, the guidelines in "Working inside the server with the power on" on page 29, and "Handling static-sensitive devices" on page 30. This information will help you work safely.
- When you install your new server, take the opportunity to download and apply the most recent firmware updates. This step will help to ensure that any known issues are addressed and that your server is ready to function at maximum levels of performance. To download firmware updates for your server, complete the following steps:
  1. Go to http://www.ibm.com/systems/support/.
  2. Under **Product support**, click **System x**.
  3. Under **Popular links**, click **Software and device drivers**.
  4. Click **System x3620 M3** to display the matrix of downloadable files for the server.

  For additional information about tools for updating, managing, and deploying firmware, see the System x and BladeCenter Tools Center at http://publib.boulder.ibm.com/infocenter/toolsctr/v1r0/index.jsp.
- Before you install optional hardware, make sure that the server is working correctly. Start the server, and make sure that the operating system starts, if an operating system is installed, or that a 19990305 error code is displayed, indicating that an operating system was not found but the server is otherwise working correctly. If the server is not working correctly, see the *Problem Determination and Service Guide* on the IBM *Documentation* CD for diagnostic information.
- Observe good housekeeping in the area where you are working. Place removed covers and other parts in a safe place.
- If you must start the server while the cover is removed, make sure that no one is near the server and that no tools or other objects have been left inside the server.
- Do not attempt to lift an object that you think is too heavy for you. If you have to lift a heavy object, observe the following precautions:
  - Make sure that you can stand safely without slipping.
  - Distribute the weight of the object equally between your feet.
  - Use a slow lifting force. Never move suddenly or twist when you lift a heavy object.
  - To avoid straining the muscles in your back, lift by standing or by pushing up with your leg muscles.
- Make sure that you have an adequate number of properly grounded electrical outlets for the server, monitor, and other devices.
- Back up all important data before you make changes to disk drives.
- Have a small flat-blade screwdriver available.
- To view the error LEDs on the system board or internal components, use the light path diagnostics button on the system board when the server is not connected to power.
- You do not have to turn off the server to install or replace redundant hot-swap ac power supplies or hot-plug Universal Serial Bus (USB) devices. However, you must turn off the server before you perform any steps that involve removing or installing adapter cables or non-hot-swap optional devices or components.

- Blue on a component indicates touch points, where you can grip the component to remove it from or install it in the server, open or close a latch, and so on.
- Orange on a component or an orange label on or near a component indicates that the component can be hot-swapped, which means that if the server and operating system support hot-swap capability, you can remove or install the component while the server is running. (Orange can also indicate touch points on hot-swap components.) See the instructions for removing or installing a specific hot-swap component for any additional procedures that you might have to perform before you remove or install the component.
- When you are finished working on the server, reinstall all safety shields, guards, labels, and ground wires.
- For a list of supported optional devices for the server, see http://www.ibm.com/servers/eserver/serverproven/compat/us/.

## System reliability guidelines

To help ensure proper system cooling and system reliability, make sure that the following requirements are met:

- Each of the drive bays has a drive or a filler panel and electromagnetic compatibility (EMC) shield installed in it.
- If the server has redundant power, each of the power-supply bays has a power supply installed in it.
- There is adequate space around the server to allow the server cooling system to work properly. Leave approximately 50 mm (2.0 in.) of open space around the front and rear of the server. Do not place objects in front of the fans. For proper cooling and airflow, replace the server cover before you turn on the server. Operating the server for extended periods of time (more than 30 minutes) with the server cover removed might damage server components.
- You have followed the cabling instructions that come with optional adapters.
- You have replaced a failed fan within 48 hours.
- You have replaced a hot-swap drive within 2 minutes of removal.
- You do not operate the server without the air baffle installed. Operating the server without the air baffle might cause the microprocessors to overheat.

## Working inside the server with the power on

**Attention:** Static electricity that is released to internal server components when the server is powered-on might cause the server to halt, which might result in the loss of data. To avoid this potential problem, always use an electrostatic-discharge wrist strap or other grounding system when you work inside the server with the power on.

The server supports hot-plug, hot-add, and hot-swap devices and is designed to operate safely while it is turned on and the cover is removed. Follow these guidelines when you work inside a server that is turned on:

- Avoid wearing loose-fitting clothing on your forearms. Button long-sleeved shirts before working inside the server; do not wear cuff links while you are working inside the server.
- Do not allow your necktie or scarf to hang inside the server.
- Remove jewelry, such as bracelets, necklaces, rings, and loose-fitting wrist watches.
- Remove items from your shirt pocket, such as pens and pencils, that might fall into the server as you lean over it.

- Avoid dropping any metallic objects, such as paper clips, hairpins, and screws, into the server.

## Handling static-sensitive devices

**Attention:** Static electricity can damage the server and other electronic devices. To avoid damage, keep static-sensitive devices in their static-protective packages until you are ready to install them.

To reduce the possibility of damage from electrostatic discharge, observe the following precautions:

- Limit your movement. Movement can cause static electricity to build up around you.
- The use of a grounding system is recommended. For example, wear an electrostatic-discharge wrist strap, if one is available. Always use an electrostatic-discharge wrist strap or other grounding system when working inside the server with the power on.
- Handle the device carefully, holding it by its edges or its frame.
- Do not touch solder joints, pins, or exposed circuitry.
- Do not leave the device where others can handle and damage it.
- While the device is still in its static-protective package, touch it to an unpainted metal surface on the outside of the server for at least 2 seconds. This drains static electricity from the package and from your body.
- Remove the device from its package and install it directly into the server without setting down the device. If it is necessary to set down the device, put it back into its static-protective package. Do not place the device on the server cover or on a metal surface.
- Take additional care when handling devices during cold weather. Heating reduces indoor humidity and increases static electricity.

# Internal cable routing and connectors

## DVD drive cable connections

The DVD drive cable is a combination power and signal cable with a shared connector on one end. The following illustration shows the internal routing and connectors for the DVD cable.

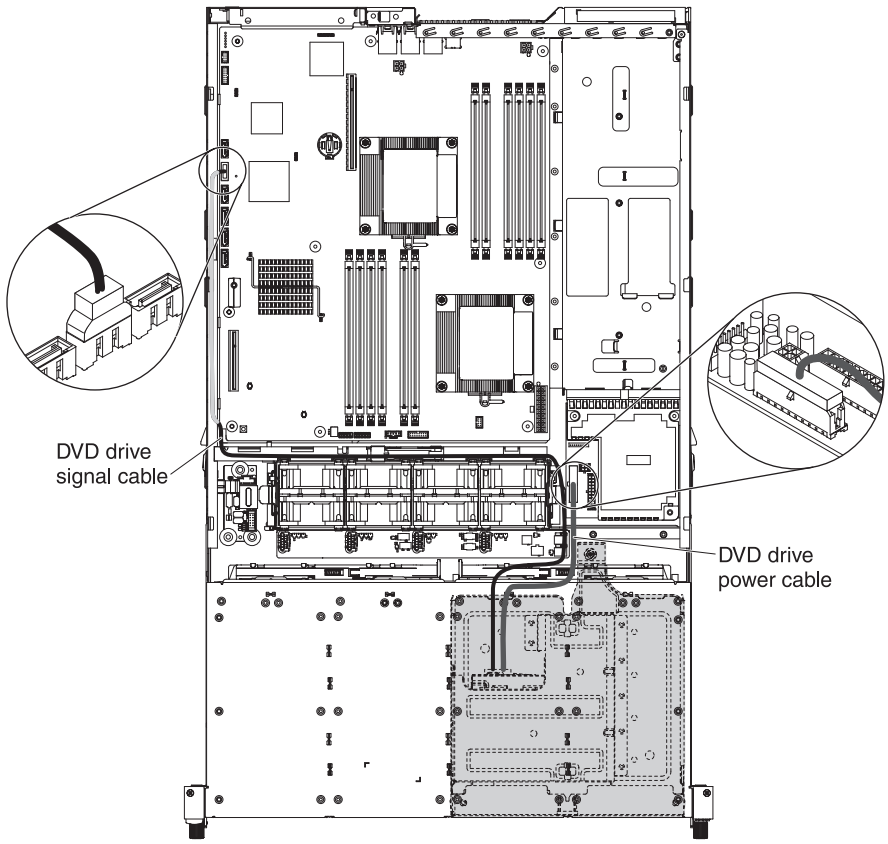

## Tape drive cable connections

The following illustration shows the internal routing and connectors for the USB tape drive power and signal cables.

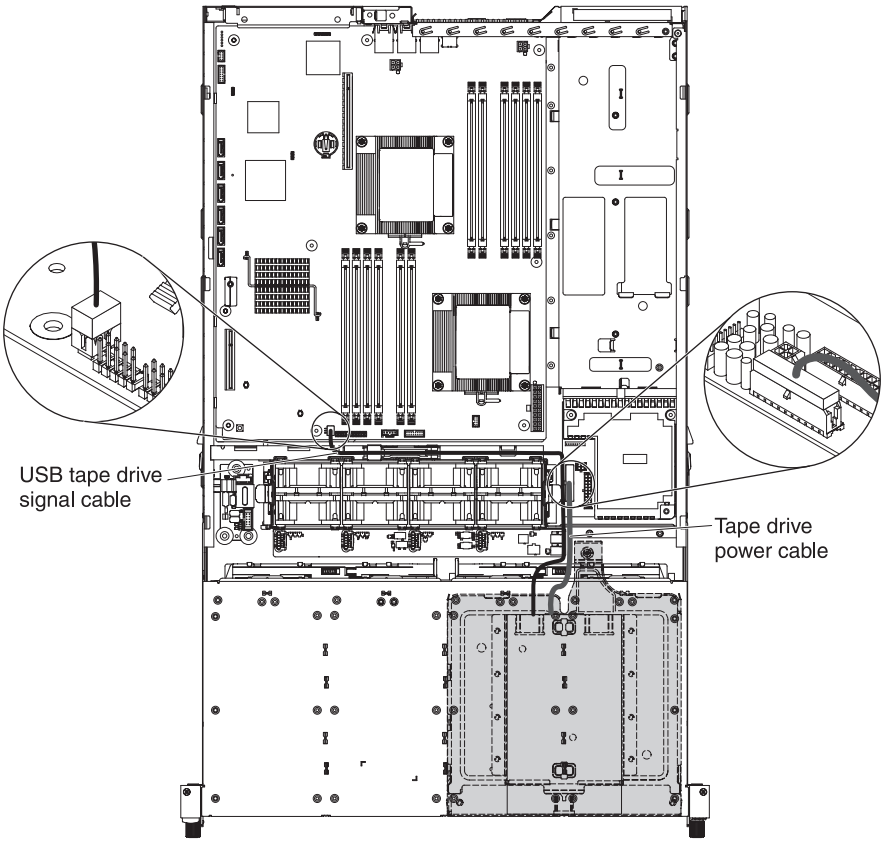

The SATA tape drive cable is a combination power and signal cable with a shared connector on one end. The following illustration shows the internal routing and connectors for the SATA tape drive cable.

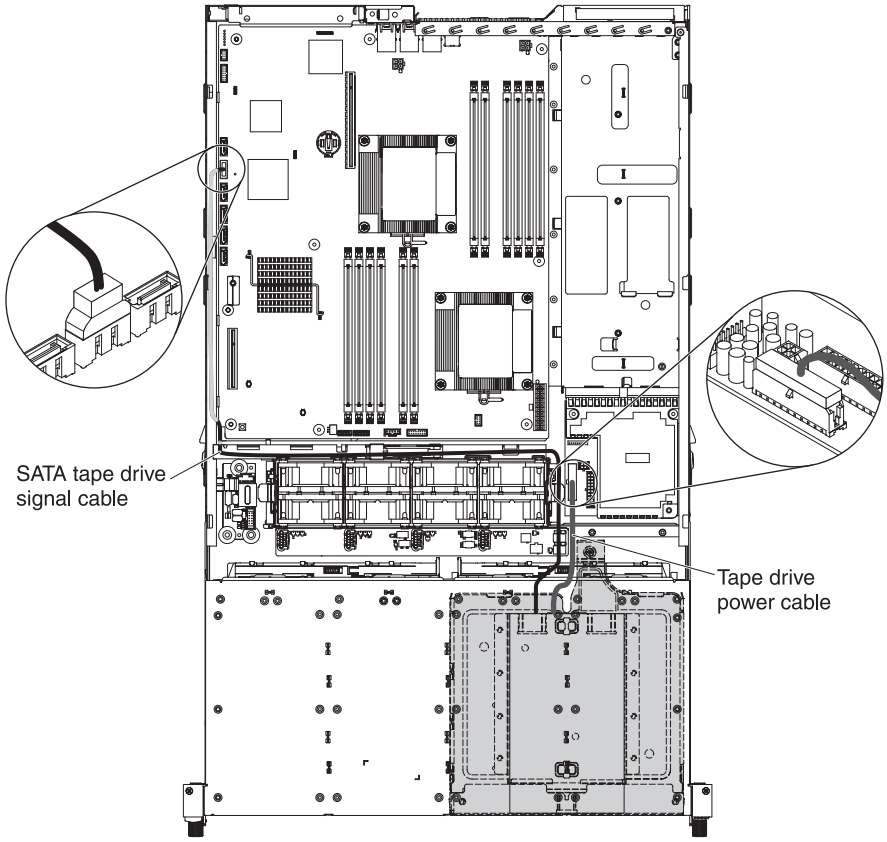

# Hot-swap hard disk drive backplane cable connections

The following illustration shows the internal routing for the hot-swap hard disk drive backplane cables.

**Notes:**

1. To connect the SAS signal cables, make sure that you first connect the signal cable and the configuration cable, and then the power cable.
2. To disconnect the SAS signal cables, make sure that you first disconnect the power cable, and then the signal cable and the configuration cable.

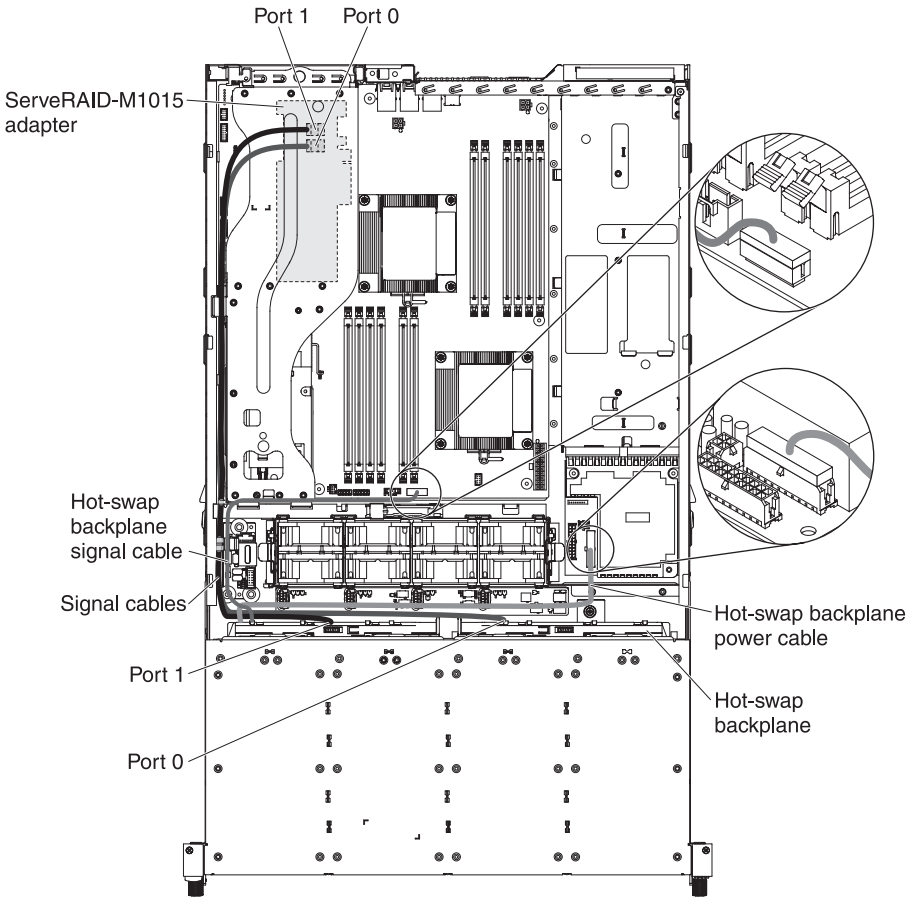

## Simple-swap hard disk drive backplate cable connections

The following illustrations show the internal routing for the simple-swap hard disk drive backplate cables for serve models that come with a ServeRAID-BR10il v2 adapter.

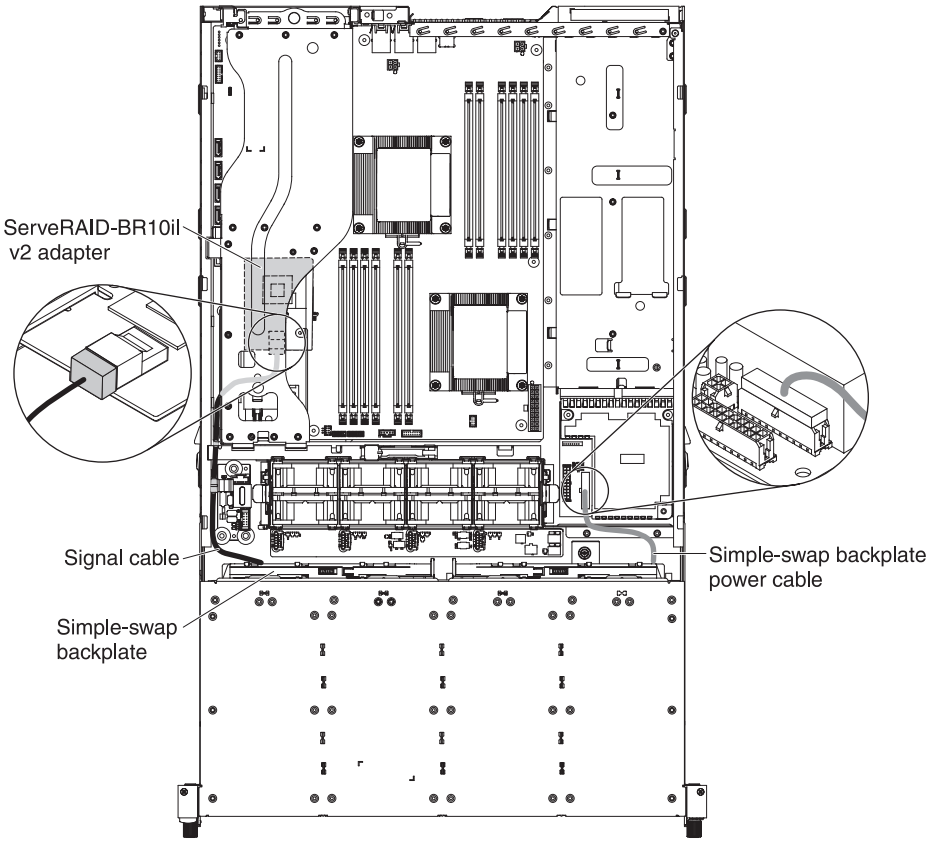

The following illustrations show the internal routing for the simple-swap hard disk drive backplate SATA signal and power cables.

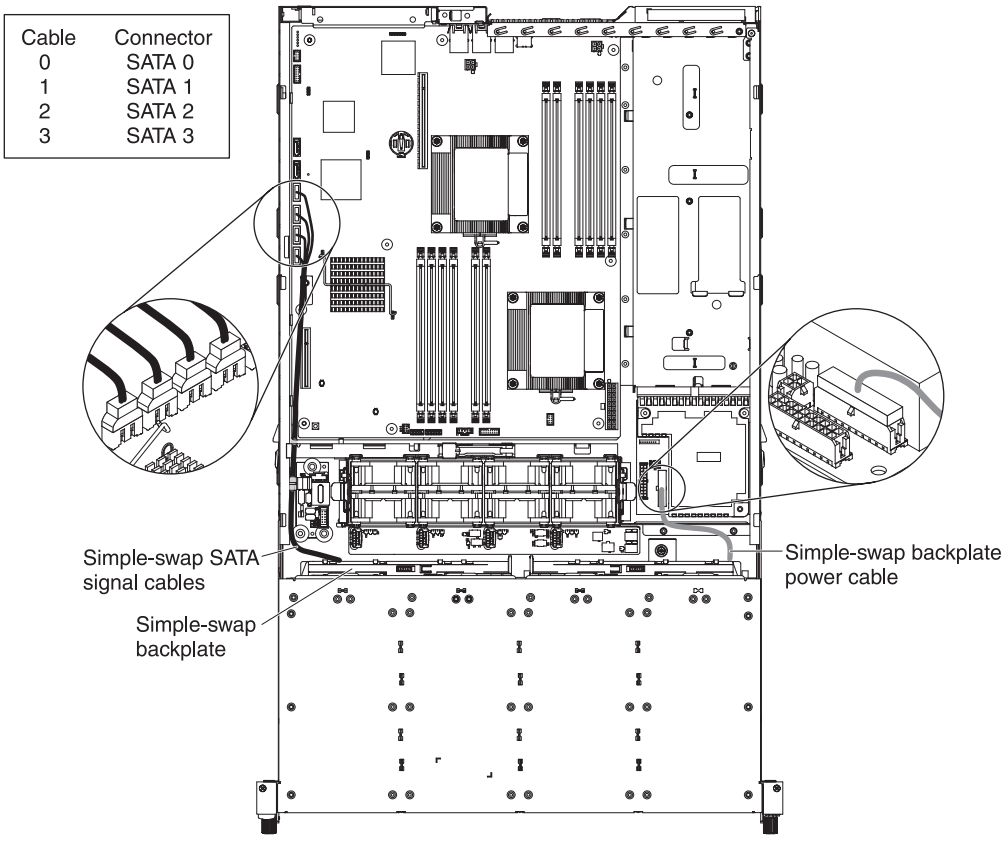

## Removing the cover

The following illustration shows how to remove the cover.

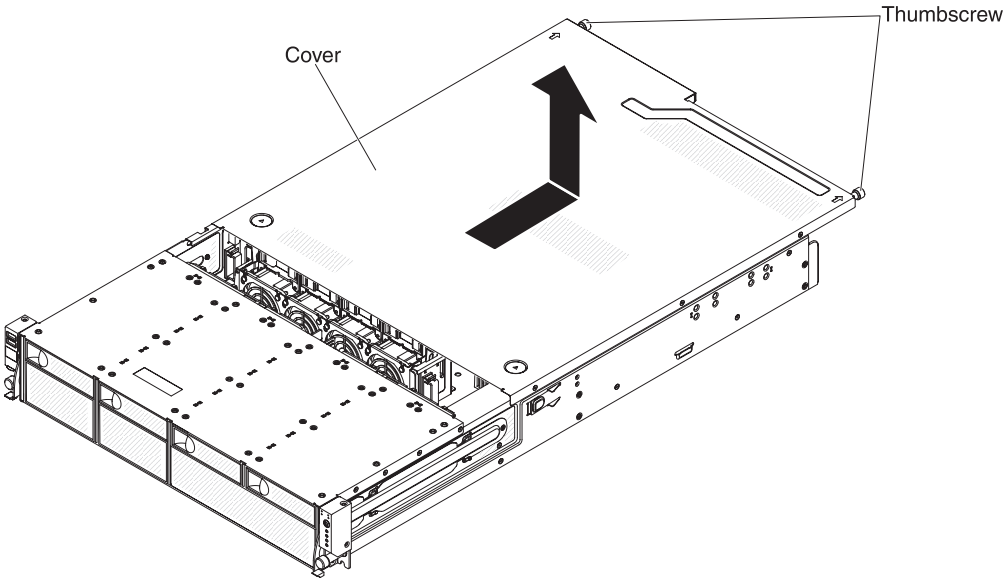


**Important:** Before you install optional hardware, make sure that the server is working correctly. Start the server, and make sure that the operating system starts, if an operating system is installed, or that a 19990305 error code is displayed, indicating that an operating system was not found but the server is otherwise working correctly. If the server is not working correctly, see the *Problem Determination and Service Guide* for diagnostic information.

To remove the cover, complete the following steps:

1. Read the safety information that begins on page vii and “Installation guidelines” on page 28.
2. If you are planning to install or remove a microprocessor, memory module, PCI adapter, battery, or other non-hot-swap optional device, turn off the server and all attached devices and disconnect all external cables and power cords (see “Turning off the server” on page 18).
3. If the server has been installed in a rack, loosen the two thumbscrews on the front of the server and remove the server out of the rack enclosure.

   **Attention:** Two or more people are required to remove the system from a rack cabinet.
4. Loosen the two thumbscrews that secure the cover to the chassis.
5. Press on the two blue grip points and slide the cover toward the rear; then, lift the cover off the server. Set the cover aside.

**Attention:** For proper cooling and airflow and to avoid damaging server components, replace the cover before you turn on the server. If you operate the server for extended periods of time (over 30 minutes) with the cover removed, the IMM turns off the server.

## Removing the air baffle

When you work with some optional devices, you must first remove the air baffle to access some components or connectors on the system board. The following illustration shows how to remove the air baffle.

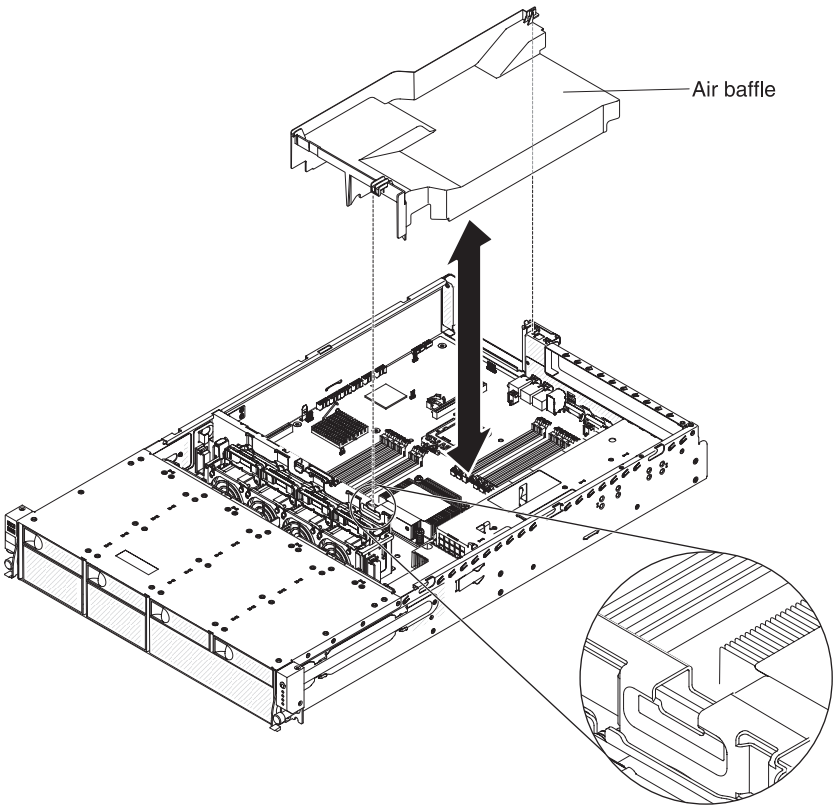


To remove the air baffle, complete the following steps:

1. Read the safety information that begins on page vii and “Installation guidelines” on page 28.
2. Turn off the server and peripheral devices and disconnect all power cords and external cables (see “Turning off the server” on page 18).
3. Remove the cover (see “Removing the cover” on page 37).
4. Grasp the top of the air baffle and lift it out of the server.

   **Attention:** For proper cooling and airflow, replace the air baffle before you turn on the server. Operating the server with the air baffle removed might damage server components.

## Removing the PCI riser-card assembly

The server comes with one PCI riser-card assembly that contains two PCI Express Gen 2 x16 connectors and one PCI Express x8 connector.

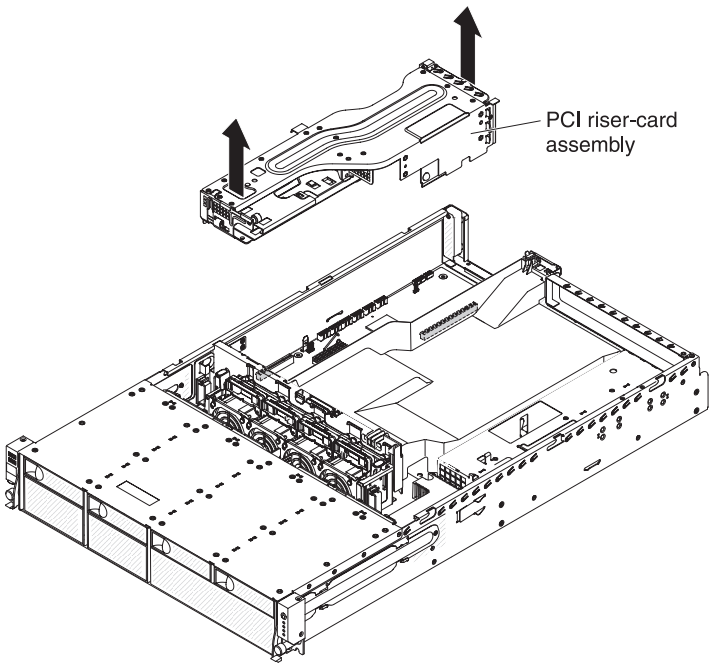


To remove the PCI riser-card assembly, complete the following steps:

1. Read the safety information that begins on page vii and “Installation guidelines” on page 28.
2. Turn off the server and peripheral devices, and disconnect the power cord and all external cables.
3. Remove the cover (see “Removing the cover” on page 37).
4. Grasp the PCI riser-card assembly at the front grip point and rear edge; then, lift the PCI riser-card assembly to remove it from the server. Place the PCI riser-card assembly on a flat, static-protective surface.

## Installing an adapter

The following notes describe the types of adapters that the server supports and other information that you must consider when you install an adapter:

- Locate the documentation that comes with the adapter and follow those instructions in addition to the instructions in this section. If you have to change switch settings or jumper settings on the adapter, follow the instructions that come with the adapter.
- The expansion slots in the PCI riser cards accommodate the various form factors of the non-hot-plug adapters as follows:
  - Expansion slot 2: Low-profile with 2U bracket
  - Expansion slot 3: Full-height, half-length
  - Expansion slot 4: Full-height, half-length
- Some high performance video adapters are supported by your server. See http://www.ibm.com/servers/eserver/serverproven/compat/us/ for more information.
- The optional NVIDIA FX 580 video adapter must be installed in expansion slot 3 on the PCI riser-card assembly.
- The optional ServeRAID-BR10il v2 adapter must be installed in expansion slot 2 on the PCI riser-card assembly.

  **Attention:** Some cluster solutions require specific code levels or coordinated code updates. If the device is part of a cluster solution, verify that the latest level of code is supported for the cluster solution before you update the code.

The following illustration shows the locations of the adapter expansion slots from the rear of the server.

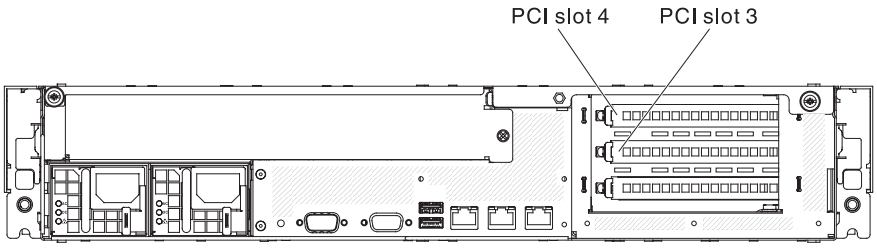


To install an adapter, complete the following steps:

1. Read the safety information that begins on page vii and “Installation guidelines” on page 28.
2. Turn off the server and peripheral devices and disconnect all power cords and external cables (see “Turning off the server” on page 18).
3. Remove the cover (see “Removing the cover” on page 37).
4. Remove the PCI riser-card assembly (see “Removing the PCI riser-card assembly” on page 39).
5. Determine which expansion slot you will use for the adapter.
6. Install the adapter:
   a. If you are installing an adapter in expansion slot 3 or 4, rotate the retention latch on the rear of the PCI riser-card assembly to the open position; then, slide the expansion-slot cover out of the expansion slot.

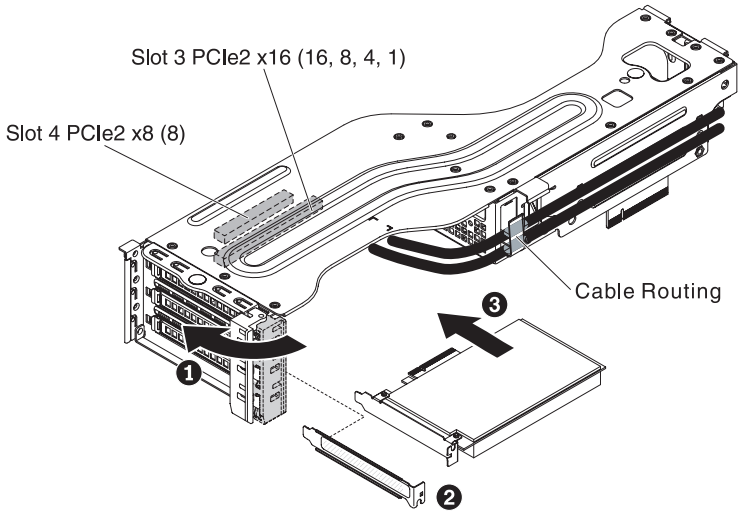


b. If you are installing an adapter in expansion slot 2, rotate the adapter retention latch to the open position.

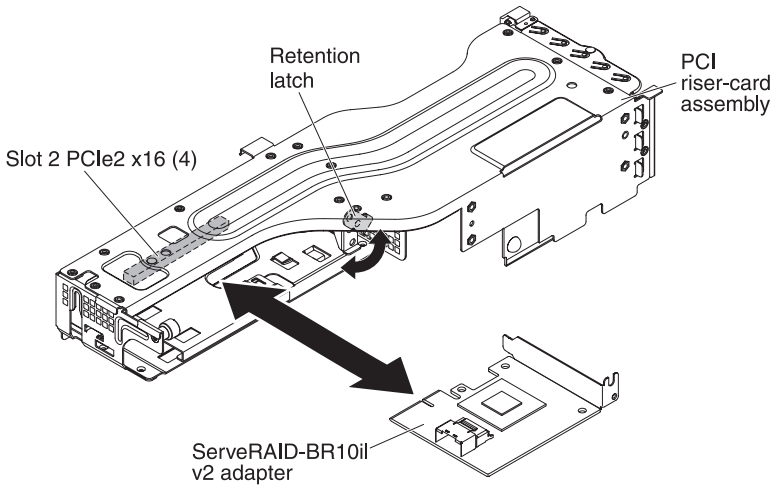


c. Align the adapter with the connector on the riser card.

d. Press the adapter firmly into the connector on the riser card.

7. Connect any required cables to the adapter.

   **Attention:**

   - When you route cables, do not block any connectors or the ventilated space around any of the fans.
   - Make sure that cables are not routed on top of components that are under the PCI riser-card assembly.
   - Make sure that cables are not pinched by the server components.

8. Rotate the adapter retention latch to secure the adapter on the PCI riser-card assembly.
9. Install the PCI riser-card assembly (see “Installing the PCI riser-card assembly” on page 78).
10. Perform any configuration tasks that are required for the adapter.

If you have other devices to install or remove, do so now. Otherwise, go to “Completing the installation” on page 78.

## Installing a ServeRAID adapter

**Note:** The optional ServeRAID-BR10il controller v2 must be installed in expansion slot 2 on the PCI riser-card assembly.

To install a ServeRAID adapter on the PCI riser-card assembly, complete the following steps:

1. Make sure that the server is turned off, all external cables and power cords are disconnected, and the cover has been removed.
2. If you are installing a new or replacement ServeRAID adapter, touch the static-protective package that contains the new ServeRAID adapter to any unpainted metal surface on the server. Then, remove the ServeRAID adapter from the package.
3. If you are installing a new or replacement ServeRAID adapter that uses a battery, complete the following steps:
   a. Remove the battery from the ServeRAID controller or the battery package.
   b. Install the battery and connect the battery to the ServeRAID adapter as instructed in the documentation that comes with the ServeRAID adapter or the battery.
4. Install the ServeRAID adapter:
   a. If you are installing the ServeRAID adapter in expansion slot 3 or 4, rotate the retention latch on the rear of the PCI riser-card assembly to the open position; then, slide the expansion-slot cover out of the expansion slot.

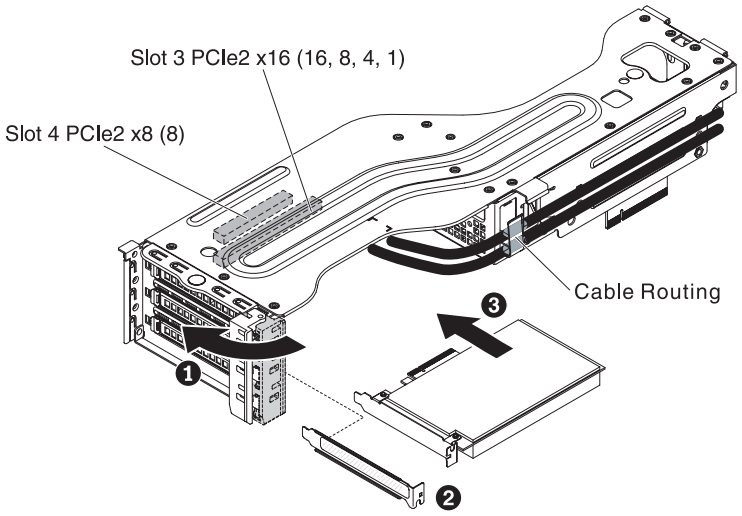


   b. If you are installing a ServeRAID-BR10il v2 adapter in expansion slot 2, rotate the adapter retention latch to the open position.

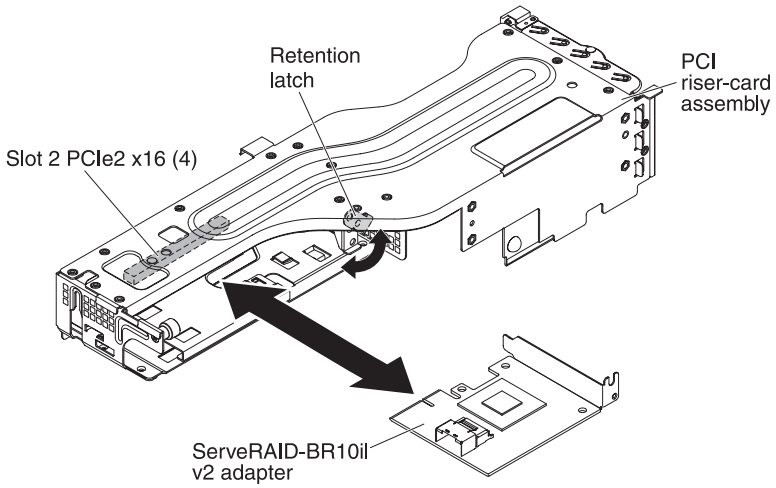


c. Align the ServeRAID adapter with the connector on the PCI riser card.

d. Firmly press the ServeRAID adapter into the connector on the PCI riser card.

5. Connect any required cables to the ServeRAID adapter.

   **Attention:**

   - When you route cables, do not block any connectors or the ventilated space around any of the fans.
   - Make sure that cables are not routed on top of components that are under the PCI riser-card assembly.
   - Make sure that cables are not pinched by the server components.

6. Rotate the adapter retention latch back to secure the ServeRAID adapter in the PCI riser-card assembly.
7. Install the PCI riser-card assembly (see “Installing the PCI riser-card assembly” on page 78).

If you have other devices to install or remove, do so now. Otherwise, go to “Completing the installation” on page 78.

**Notes:**

1. When you restart the server for the first time after you install a ServeRAID adapter with a battery, the monitor screen remains blank while the controller initializes the battery. This might take a few minutes, after which the startup process continues. This is a one-time occurrence.

   **Important:** You must allow the initialization process to be completed. If you do not, the battery pack will not work, and the server might not start.

   The battery comes partially charged, at 30% or less of capacity. Run the server for 4 to 6 hours to fully charge the battery. The LED just above the battery on the controller remains lit until the battery is fully charged.

   Until the battery is fully charged, the controller firmware sets the controller cache to write-through mode; after the battery is fully charged, the controller firmware re-enables write-back mode.

2. When you restart the server, you are given the opportunity to import the existing RAID configuration to the new ServeRAID adapter.

## Installing a ServeRAID adapter battery on the remote battery tray

The Intelligent Battery Backup Unit (iBBU) is an optional battery for the ServeRAID adapter. It is referred to as the *battery* throughout this section. You must purchase the remote battery cable and install the battery at a distance from the ServeRAID adapter to avoid overheating.

You can install up to two batteries on the remote battery trays on the PC riser-card assembly.

To install a battery on the remote battery tray, complete the following steps:

1. Read the safety information that begins on page vii and “Installation guidelines” on page 28.
2. Turn off the server and peripheral devices and disconnect all power cords and external cables (see “Turning off the server” on page 18).
3. Remove the cover (see “Removing the cover” on page 37).
4. Remove the PCI riser-card assembly (see “Removing the PCI riser-card assembly” on page 39).
5. If a battery and battery carrier are attached to the ServeRAID adapter, remove the three screws that secure the battery carrier to the ServeRAID adapter. Set the battery and battery carrier aside.

   **Note:** The illustrations in this document might differ slightly from your hardware.

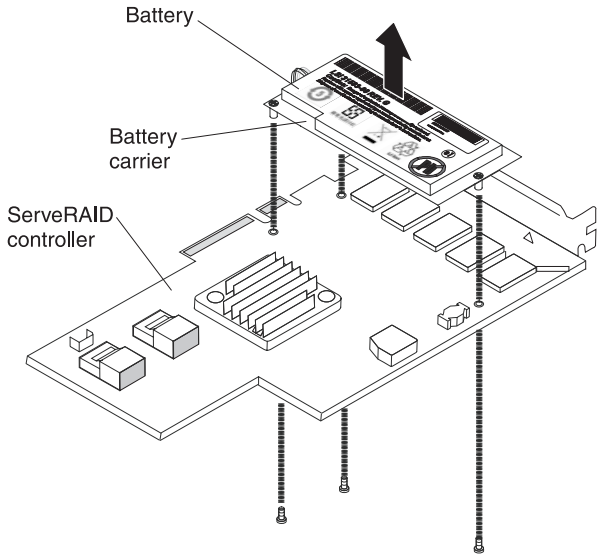


6. Install the interposer card on the interposer card connector on the ServeRAID adapter:
   a. Remove the interposer card and the loose screw from the bag.
   b. Rotate the standoff so that it aligns with the hole in the ServeRAID adapter, and position the interposer card connector over the ServeRAID adapter connector.

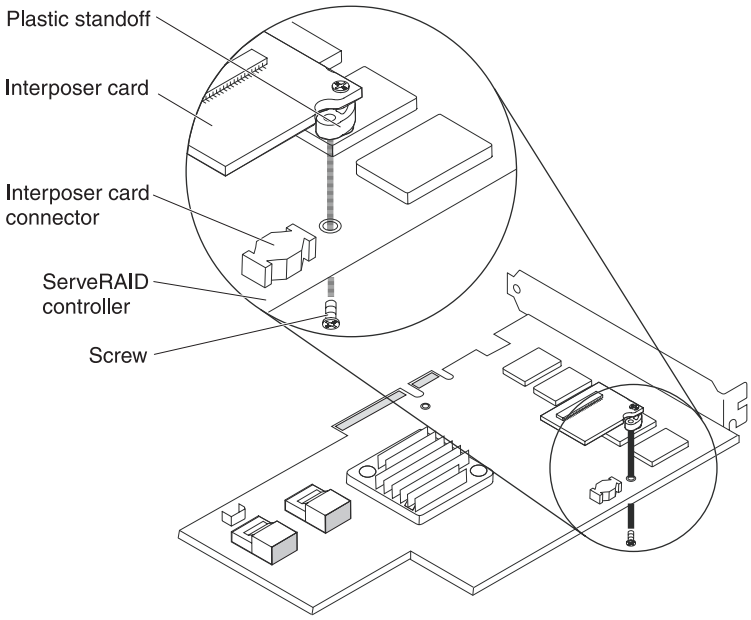


c. Press the interposer card down onto the interposer card connector so that the interposer card is secured.

d. From the other side of the ServeRAID adapter, insert and tighten the screw to secure the interposer card to the ServeRAID adapter.

7. Install the battery on the remote battery tray:

a. Press the retention latch to remove the remote battery tray from the PCI riser-card assembly.

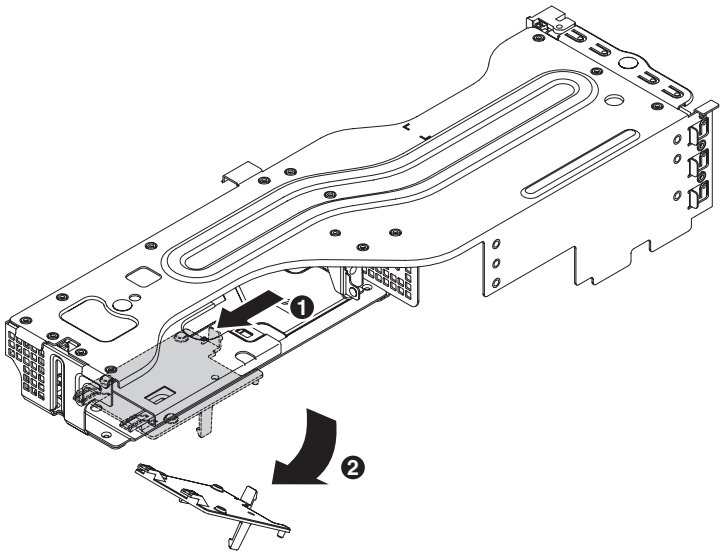


b. On the remote battery tray, find the pattern of recessed rings that matches the posts on the battery and battery carrier.

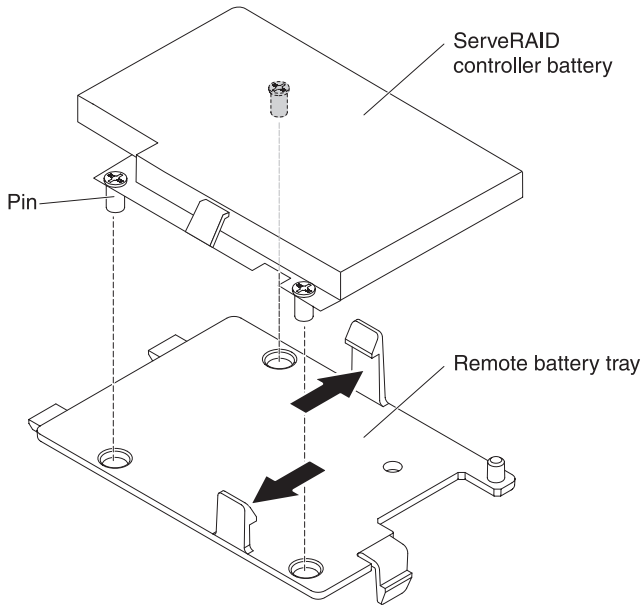


c. Press the posts into the rings and underneath the tabs on the remote battery tray. Make sure the two retention clips secure the battery and battery carrier on the remote battery tray.

8. Align the two pins on the remote battery tray with the holes on the PCI riser-card assembly and press the retention latch into the slot to secure the remote battery tray on the PCI riser-card assembly.

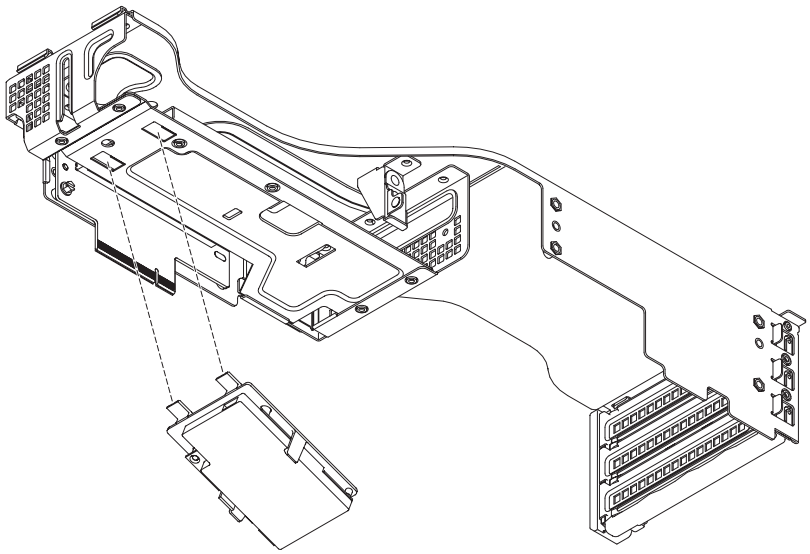

9. Route the remote battery cable through the cage hole on the PCI riser-card assembly.

   **Attention:** Make sure that the cable is not pinched and does not cover any connectors or obstruct any components on the system board.

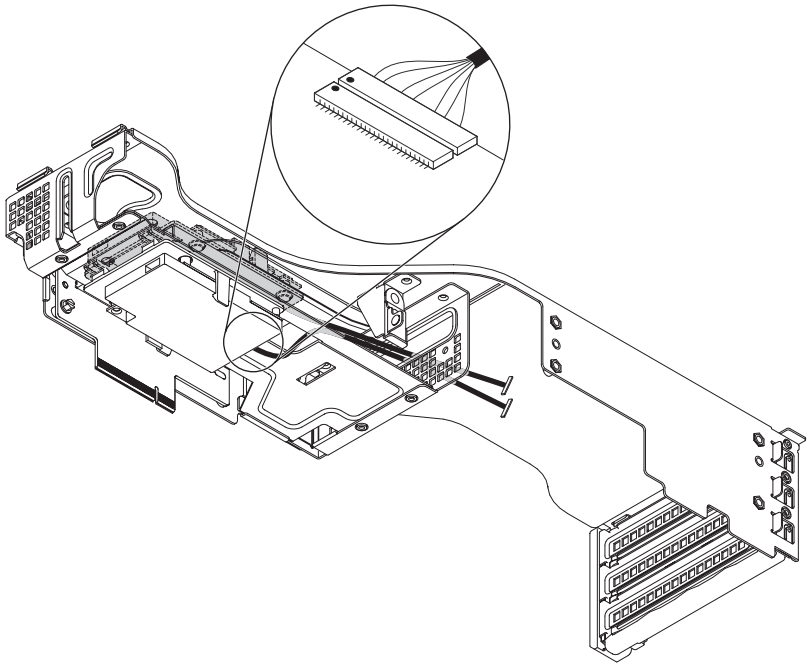

10. Connect the remote battery cable to the battery carrier.

    **Attention:** To avoid damage to the hardware, make sure that you align the black dot on the cable connector with the black dot on the connector on the interposer card. *Do not force the remote battery cable into the connector.*

11. Connect the other end of the remote battery cable to the interposer card on the ServeRAID controller. Route the remote battery cable through the cage hole on the PCI riser-card assembly.

    **Attention:** To avoid damage to the hardware, make sure that you align the black dot on the cable connector with the black dot on the connector on the interposer card. *Do not force the remote battery cable into the connector.*

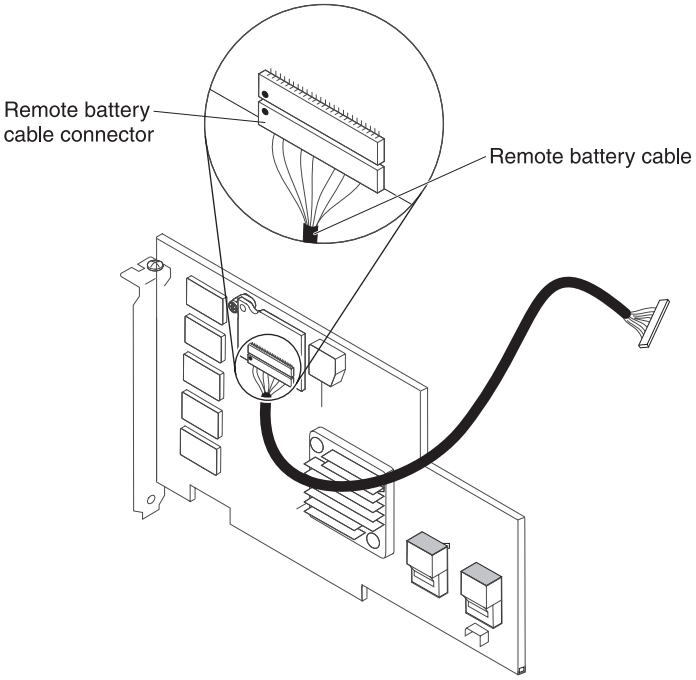

12. Install the ServeRAID adapter on the PCI riser-card assembly (see “Installing a ServeRAID adapter” on page 42).

If you have other devices to install or remove, do so now. Otherwise, go to “Completing the installation” on page 78.

**Note:** The battery must recharge for at least 6 hours under normal operating conditions. To protect your data, the ServeRAID adapter firmware changes the write policy to write-through until the battery unit is sufficiently charged. When the battery unit is charged, the ServeRAID adapter firmware changes the write policy to write-back.

## Installing an optional ServeRAID adapter advanced feature key

To install an optional ServeRAID adapter advanced feature key, complete the following steps:

1. Read the safety information that begins on page vii and “Installation guidelines” on page 28.
2. Turn off the server and peripheral devices and disconnect all power cords and external cables (see “Turning off the server” on page 18).
3. Remove the cover (see “Removing the cover” on page 37).
4. Remove the PCI riser-card assembly (see “Removing the PCI riser-card assembly” on page 39).
5. Align the upgrade key with the connector on the ServeRAID adapter and push it into the connector until it is firmly seated.

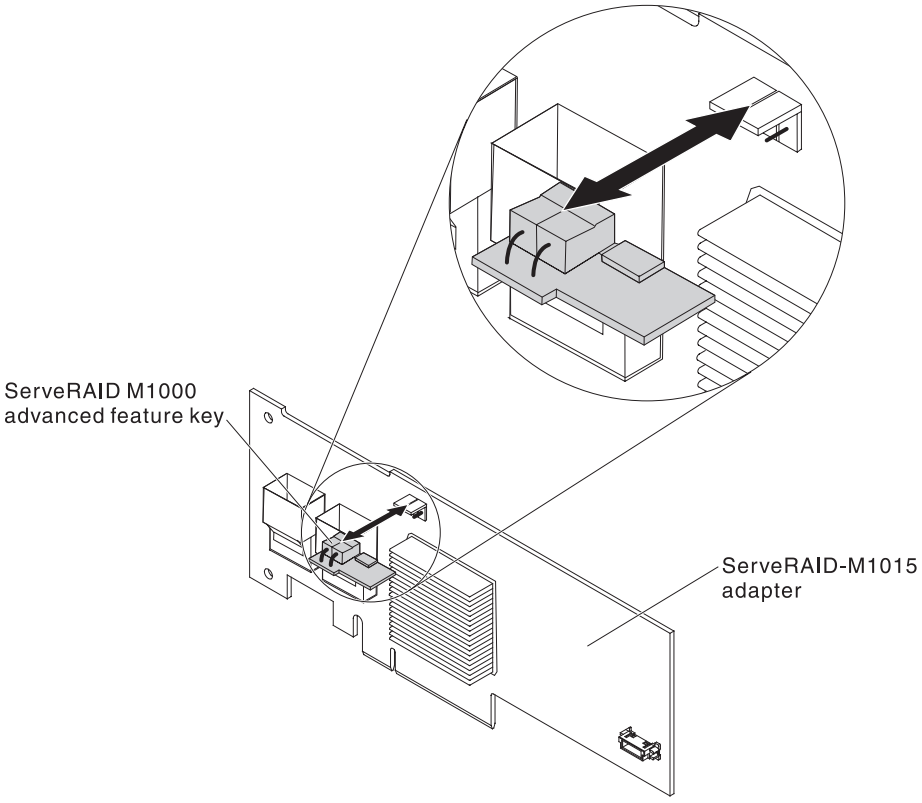

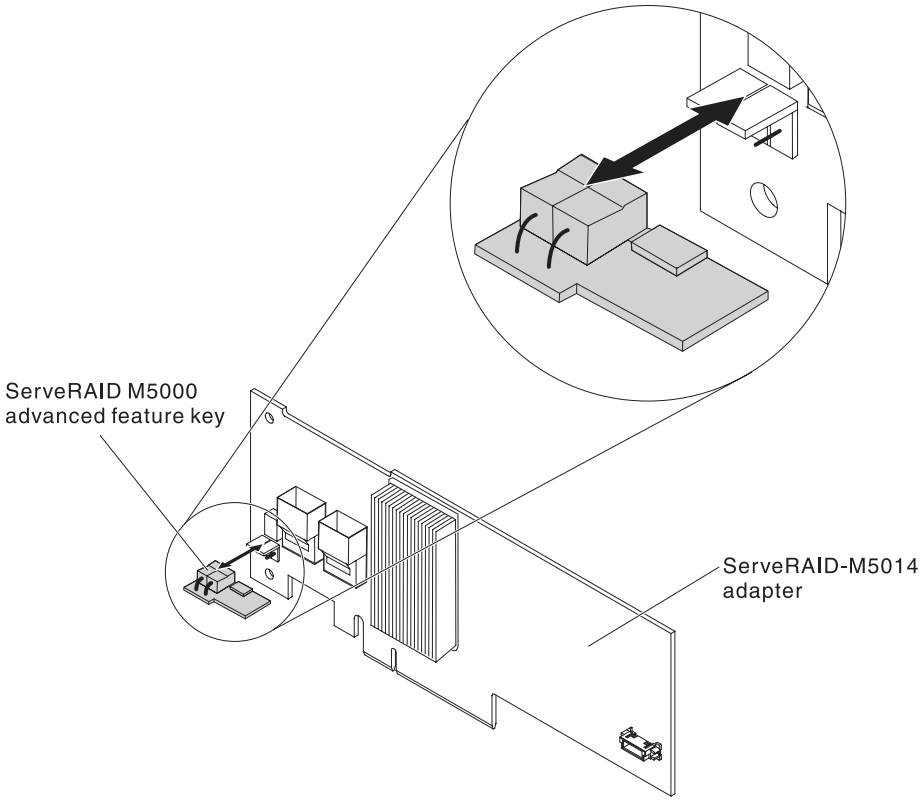


If you have other devices to install or remove, do so now. Otherwise, go to “Completing the installation” on page 78.

## Installing an IBM Virtual Media Key

The optional IBM Virtual Media Key enables the IMM remote presence and blue-screen capture capability. This feature provides graphical console redirection with remote keyboard and mouse interaction, plus remote diskette and DVD drive support.

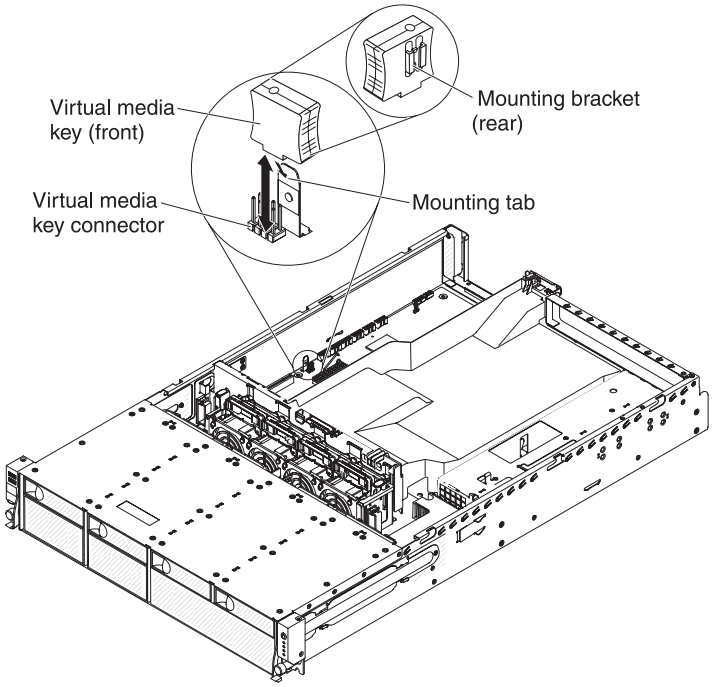


To install a virtual media key, complete the following steps:

1. Read the safety information that begins on page vii and “Installation guidelines” on page 28.
2. Turn off the server and peripheral devices and disconnect all power cords and external cables (see “Turning off the server” on page 18).
3. Remove the cover (see “Removing the cover” on page 37).
4. Remove the PCI riser-card assembly (see “Removing the PCI riser-card assembly” on page 39).
5. Align the mounting bracket on the rear of the virtual media key with the mounting tab and slide it down the tab onto the virtual medial key connector on the system board.
6. Press the virtual media key down into the connector until it is firmly seated on the system board.

If you have other devices to install or remove, do so now. Otherwise, go to “Completing the installation” on page 78.

## Installing a hot-swap hard disk drive

The following notes describe the type of hard disk drives that the server supports and other information that you must consider when you install a drive. For a list of supported drives, see http://www.ibm.com/servers/eserver/serverproven/compat/us/.

- Locate the documentation that comes with the hard disk drive and follow those instructions in addition to the instructions in this chapter.
- The server supports up to eight 3.5-inch hot-swap SAS/SATA hard disk drives. For a list of supported hard disk drives, see http://www.ibm.com/servers/eserver/serverproven/compat/us/.
- All hot-swap drives in the server should have the same throughput speed rating. Using hard disk drives with different speed ratings will cause all drives to operate at the throughput speed of the slowest drive.

The following illustration shows how to install a hot-swap hard disk drive.

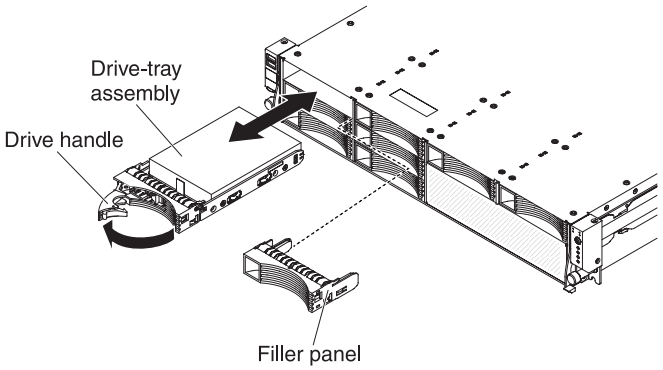


**Attention:** To maintain proper system cooling, do not operate the server for more than 10 minutes without either a drive or a filler panel installed in each bay.

To install a drive in a hot-swap bay, complete the following steps:

1. Read the safety information that begins on page vii, “Installation guidelines” on page 28, and “Handling static-sensitive devices” on page 30.
2. Remove the drive filler panel from one of the empty hot-swap bays.
3. Install the hard disk drive in the hot-swap bay:
   a. Orient the drive as shown in the illustration.
   b. Make sure that the tray handle is open.
   c. Align the drive assembly with the guide rails in the bay.
   d. Gently push the drive assembly into the bay until the drive stops.
   e. Push the tray handle to the closed (locked) position.
   f. If the system is turned on, check the hard disk drive status LED to verify that the hard disk drive is operating correctly.

      After you install a hard disk drive, the green activity LED flashes as the disk spins up. The amber LED turn off after about 1 minute. If the new drive starts to rebuild, the amber LED flashes slowly and the green activity LED remains lit during the rebuild process. If the amber LED remains lit, see the *Problem Determination and Service Guide* on the IBM *Documentation* CD for hard disk drive problem solutions.

   **Note:** You might have to reconfigure the disk arrays after you install hard disk drives. See the RAID documentation on the IBM *ServeRAID Support* CD for information about RAID controllers.

If you have other devices to install or remove, do so now. Otherwise, go to “Completing the installation” on page 78.

## Removing a hot-swap hard disk drive

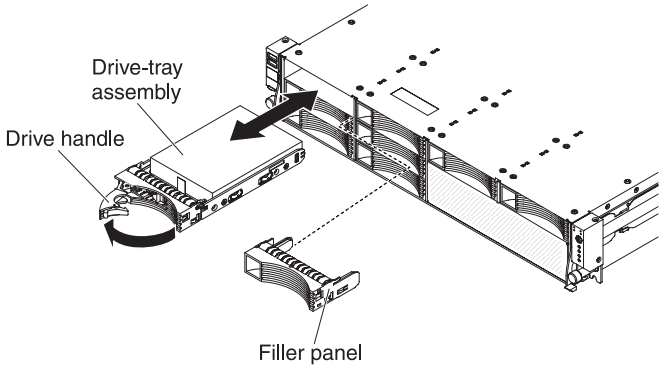


To remove a hot-swap hard disk drive, complete the following steps:

1. Read the safety information that begins on page vii, “Installation guidelines” on page 28, and “Handling static-sensitive devices” on page 30.
2. Press the release latch on the side of the drive front.
3. Move the handle on the drive to the open position.
4. Pull the hot-swap drive assembly out of the bay approximately 25 mm (1 in.). Wait approximately 45 seconds while the drive spins down before you remove the drive assembly completely from the bay.

   **Note:** You might have to reconfigure the disk arrays after you remove a hard disk drive. See the RAID documentation on the IBM *ServeRAID Support* CD for information about RAID controllers.

If you have other devices to install or remove, do so now. Otherwise, go to “Completing the installation” on page 78.

## Installing a simple-swap hard disk drive

The following notes describe other information that you must consider when you install a drive.

- Locate the documentation that comes with the hard disk drive and follow those instructions in addition to the instructions in this section.
- The server supports up to four 3.5-inch simple-swap SATA hard disk drives. For a list of supported hard disk drives, see http://www.ibm.com/servers/eserver/serverproven/compat/us/

**Important:** Do not install a SCSI hard disk drive in this server.

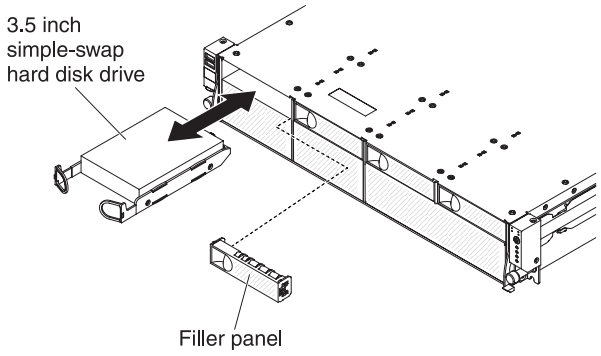


**Attention:** To maintain proper system cooling, do not operate the server for more than 10 minutes without either a drive or a filler panel installed in each bay.

To install a drive in the simple-swap bay, complete the following steps:

1. Read the safety information that begins on page vii, “Installation guidelines” on page 28, and “Handling static-sensitive devices” on page 30.
2. Turn off the server and peripheral devices and disconnect all power cords and external cables (see “Turning off the server” on page 18).
3. Remove the drive filler panel from one of the empty simple-swap bays.
4. Align the hard disk drive with the guide rails in the bay.
5. Pull the round blue loops of the hard disk drive toward each other; then, carefully slide the drive assembly into the drive bay until it stops, and release the loops.

**Note:** You might have to reconfigure the disk arrays after you install hard disk drives. See the RAID documentation on the IBM *ServeRAID Support* CD for information about RAID controllers.
If you have other devices to install or remove, do so now. Otherwise, go to “Completing the installation” on page 78.

## Removing a simple-swap hard disk drive

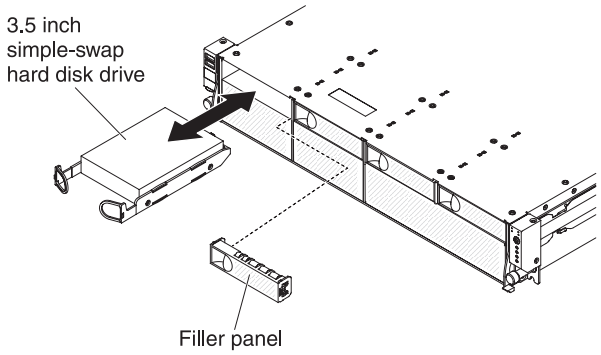


**Attention:** To maintain proper system cooling, do not operate the server for more than 10 minutes without either a drive or a filler panel installed in each bay.

To remove a hard disk drive from a simple-swap bay, complete the following steps:

1. Read the safety information that begins on page vii, “Installation guidelines” on page 28, and “Handling static-sensitive devices” on page 30.
2. Turn off the server and all attached devices; then, disconnect all power cords and external cables.

3. Remove the drive filler panel from the front of the server.
4. Pull the round blue loops of the hard disk drive toward each other; then, pull the drive out of the bay.

If you have other devices to install or remove, do so now. Otherwise, go to “Completing the installation” on page 78.

## Installing an optional DVD drive cage

The IBM System x3620 M3 DVD drive enablement kit is used to install an optical drive cage in an IBM System x3620 M3 server. See http://www.ibm.com/servers/eserver/serverproven/compat/us/ for a list of supported optional devices. To order a DVD drive enablement kit, contact your IBM marketing representative or authorized reseller.

The IBM System x3620 M3 DVD drive enablement kit contains the following components:

- One DVD cable
- One optical drive cage
- One retention bracket

To install the optional DVD drive cage, complete the following steps:

1. Read the safety information that begins on page vii and “Installation guidelines” on page 28.
2. Turn off the server and peripheral devices, and disconnect the power cord and all external cables (see “Turning off the server” on page 18).
3. Remove the server cover (see “Removing the cover” on page 37).
4. Loosen the thumbscrew that secure the drive filler cage to the chassis; then, push the drive filler cage out of the bay to remove it from the server.

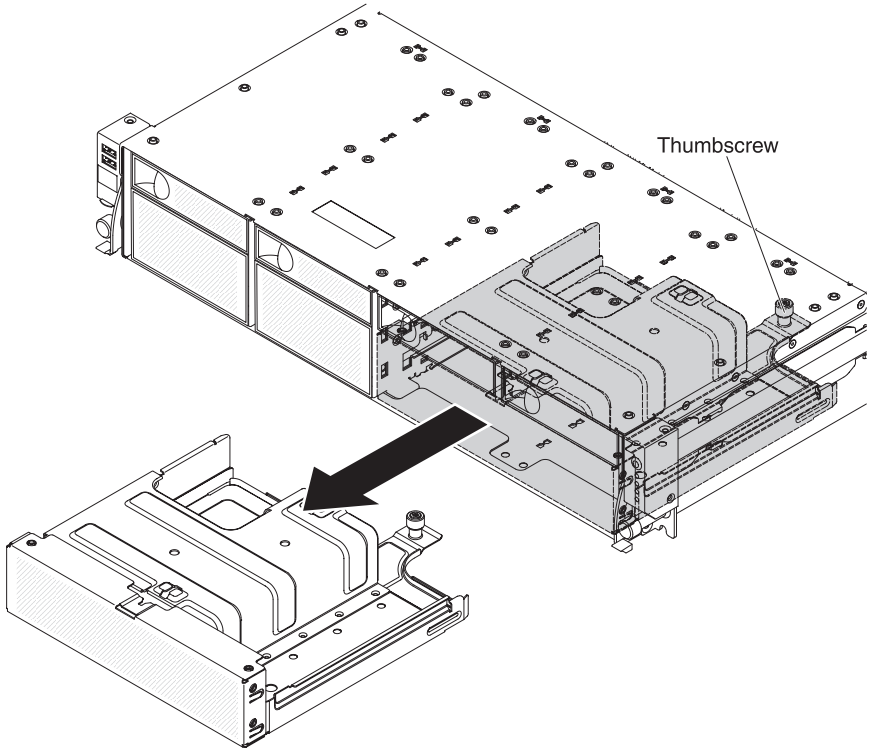

5. Insert the DVD cable into the connector on the DVD drive cage; then slide the cable connector to the left until it clicks into place.

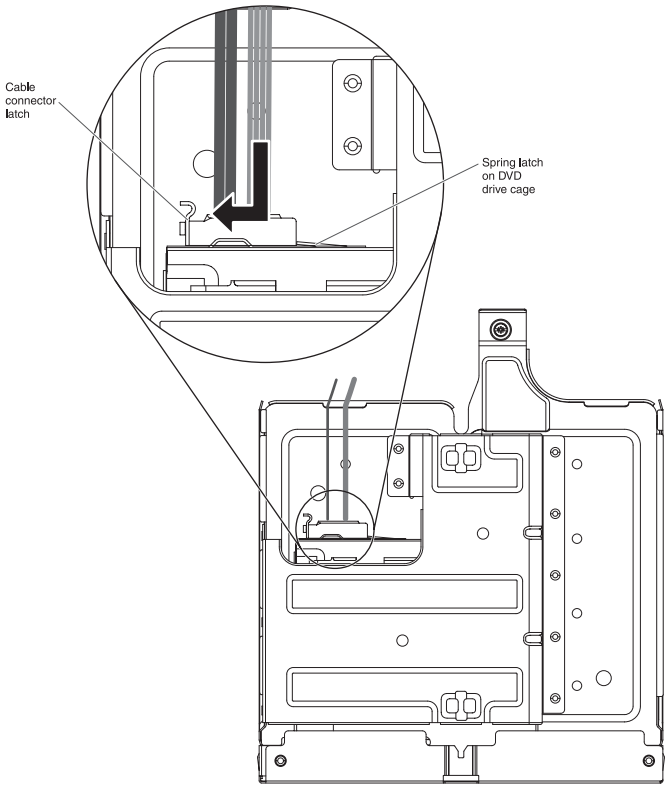


The following illustration shows the label on the DVD cable.

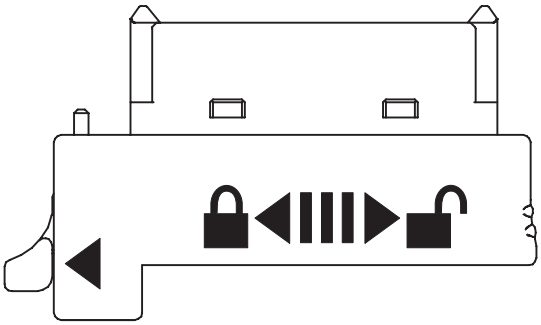

6. Route the DVD cable through the cage hole on the chassis.
7. Connect the DVD drive signal cable to the system board and the power cable to the power-supply paddle card (see “Internal cable routing and connectors” on page 31); then, secure the cables with any retention clips.
8. Slide the DVD drive cage forward into the drive bay until the thumbscrew on the rear of the drive cage align with the screw hole on the chassis.

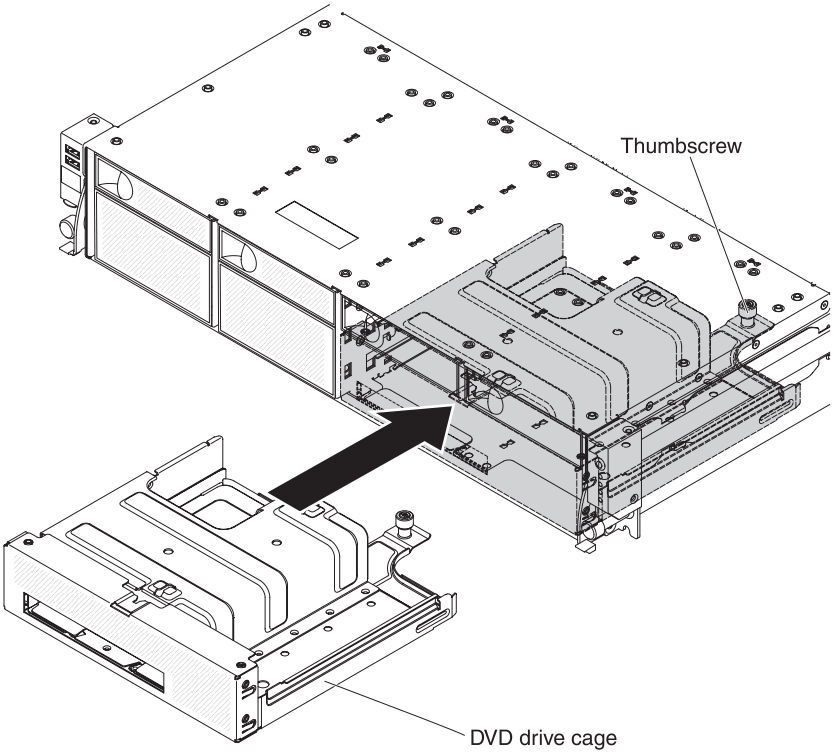


9. Tighten the thumbscrew to secure the DVD drive cage in the server.

If you have other devices to install or remove, do so now. Otherwise, go to “Completing the installation” on page 78.

## Installing an optional DVD drive

For a list of supported optional optical disk drives for the server, see http://www.ibm.com/servers/eserver/serverproven/compat/us/.

To install an optional DVD drive, complete the following steps:

1. Read the safety information that begins on page vii and “Installation guidelines” on page 28.
2. Make sure that the server is turned off, all external cables and power cords are disconnected, and the cover has been removed. For more information, see “Turning off the server” on page 18 and “Removing the cover” on page 37.
3. Attach the drive-retention clip to the side of the DVD drive.

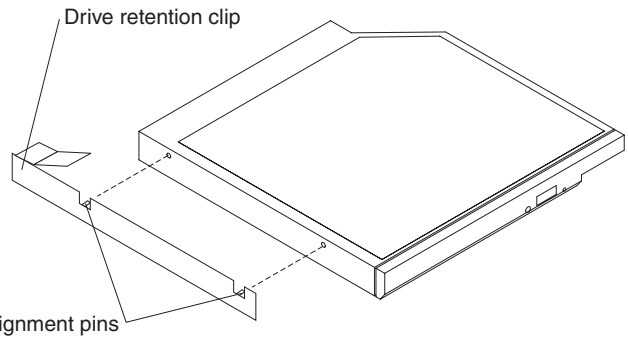


4. Slide the DVD drive into the drive bay until the DVD drive clicks into place.

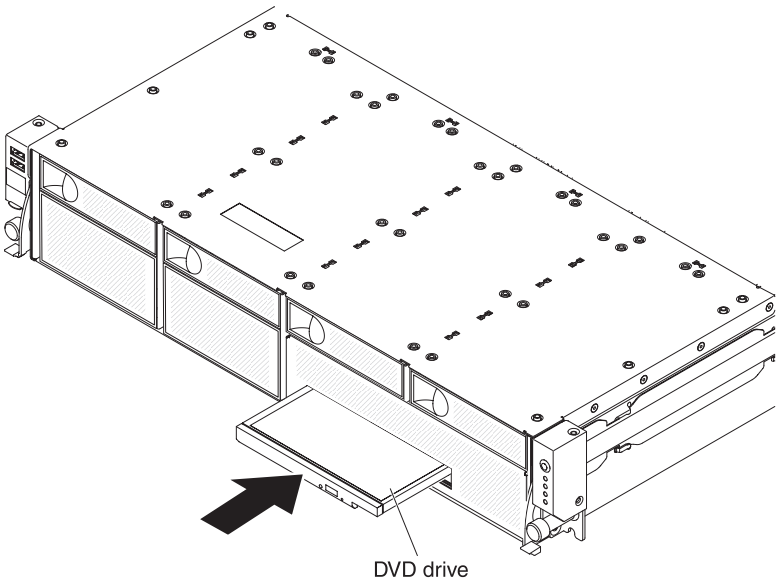


If you have other devices to install or remove, do so now. Otherwise, go to “Completing the installation” on page 78.

## Installing an optional tape drive cage

The IBM System x3620 M3 tape drive enablement kit is used to install an optional tape drive cage in an IBM System x3620 M3 server. See http://www.ibm.com/servers/eserver/serverproven/compat/us/ for a list of supported optional devices. To order a tape drive enablement kit, contact your IBM marketing representative or authorized reseller. The IBM System x3620 M3 tape drive enablement kit is compatible only with the following tape drives:

- IBM DDS Generation 5 (DDS/5) SATA tape drive
- IBM DDS Generation 6 (DDS/6) USB tape drive

The IBM System x3620 M3 tape drive enablement kit contains the following components:

- One USB signal cable and one power cable, or one SATA-power combo cable
- One tape drive cage

To install the optional tape drive cage, complete the following steps:

1. Read the safety information that begins on page vii and “Installation guidelines” on page 28.
2. Turn off the server and peripheral devices, and disconnect the power cord and all external cables (see “Turning off the server” on page 18).
3. Remove the server cover (see “Removing the cover” on page 37).
4. Remove the air baffle (see “Removing the air baffle” on page 38).
5. Remove the PCI riser-card assembly (see “Removing the PCI riser-card assembly” on page 39).
6. Loosen the thumbscrew that secure the drive filler cage to the chassis; then, push the drive filler cage out of the bay to remove it from the server.

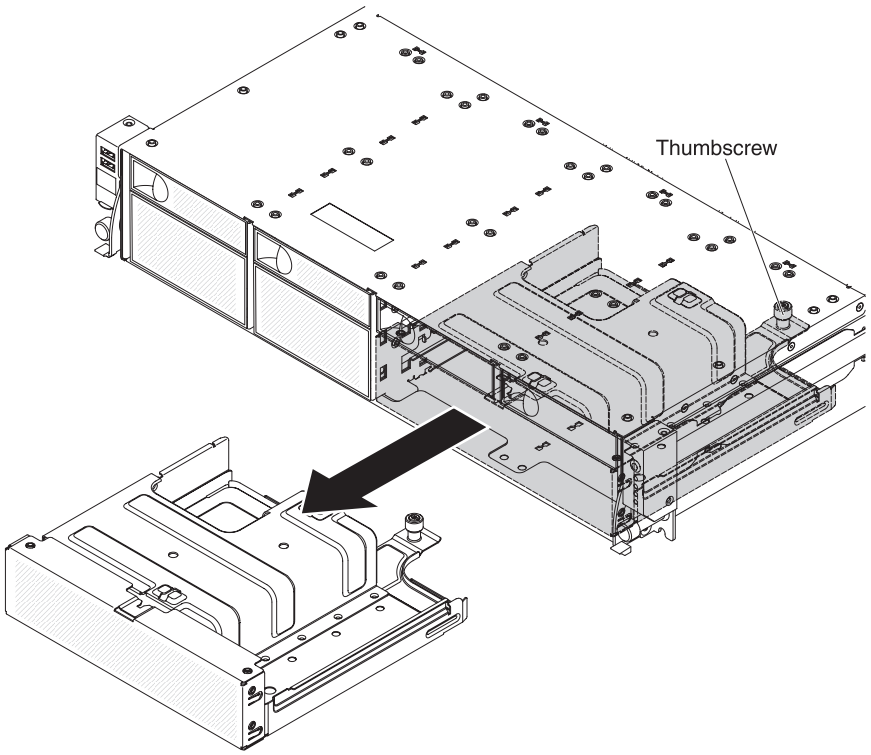


7. Route the tape drive cables through the cage hole on the chassis (see “Internal cable routing and connectors” on page 31).
8. Connect the tape drive cables:
   - USB tape drive: connect the USB signal cable to the system board and the power cable to the power-supply paddle card
   - SATA tape drive: connect the SATA connector to the system board and the power cable to the power-supply paddle card
9. Slide the tape drive cage forward into the drive bay until the thumbscrew on the rear of the drive cage align with the screw hole on the chassis.

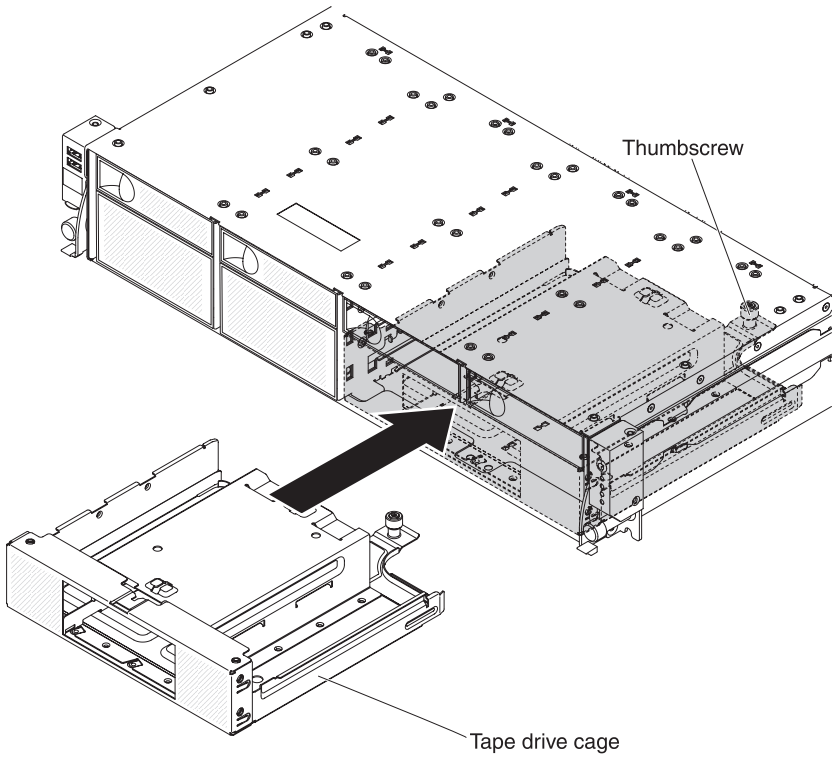


10. Tighten the thumbscrew to secure the tape drive cage in the server.

If you have other devices to install or remove, do so now. Otherwise, go to “Completing the installation” on page 78.

## Installing an optional tape drive

The following illustration shows how to install an optional tape drive.

To install a tape drive, complete the following steps:

1. Read the safety information that begins on page vii, “Installation guidelines” on page 28, and “Handling static-sensitive devices” on page 30.
2. Turn off the server and peripheral devices, and disconnect the power cords and all external cables.
3. Remove the drive tray from the server.
4. Install the tape drive on the tray as shown in the following illustration. If the tape drive comes with a metal spacer attached, remove the spacer before you install the tape drive on the tray.

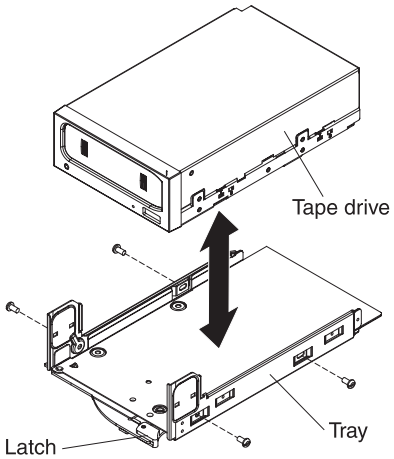


5. Prepare the drive according to the instructions that come with the drive, setting any switches or jumpers.
6. Remove the server cover (see “Removing the cover” on page 37).
7. Remove the filler panel from the tape-drive bay (if one is installed).
8. Connect the cables to the back of the tape drive.
9. Make sure all the cables are out of the way; then, slide the tape-drive assembly the rest of the way into the tape-drive bay.

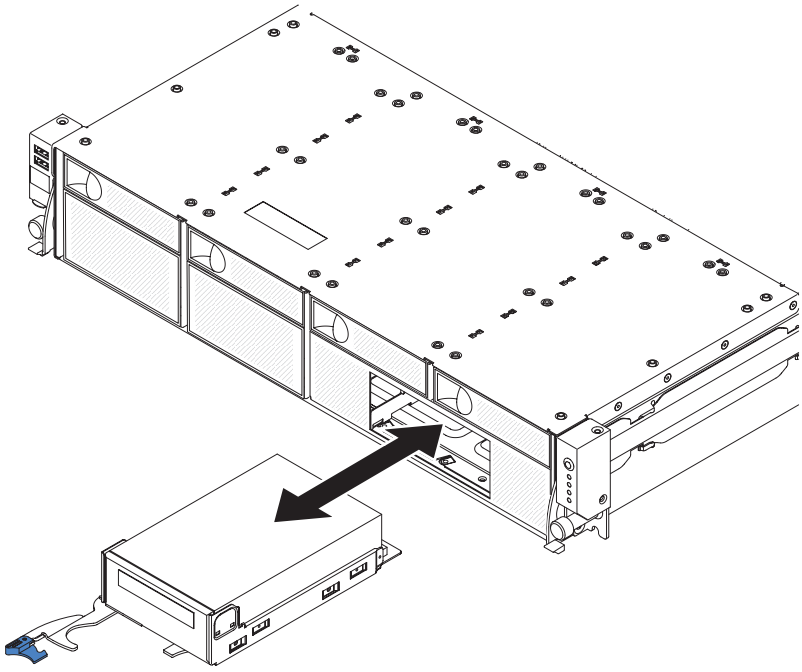

10. Push the latch to the closed (locked) position.

If you have other devices to install or remove, do so now. Otherwise, go to “Completing the installation” on page 78.

## Installing a memory module

The following notes describe the types of dual inline memory modules (DIMMs) that the server supports and other information that you must consider when you install DIMMs:

- When you install or remove DIMMs, the server configuration information changes. When you restart the server, the system displays a message that indicates that the memory configuration has changed.
- The server supports only industry-standard double-data-rate 3 (DDR3), 800, 1066, or 1333 MHz, PC3-10600R-999 (single-rank or dual-rank), synchronous dynamic random-access memory (SDRAM) dual inline memory modules (DIMMs) with error correcting code (ECC). See http://www.ibm.com/servers/eserver/serverproven/compat/us/ for a list of supported memory modules for the server.
- The specifications of a DDR3 DIMM are on a label on the DIMM, in the following format.

  *ggg e*Rx*ff*-PC3-*wwwwwm-aa-bb-cc*

  where:

  *ggg* is the total capacity of the DIMM (for example, 1GB, 2GB, or 4GB)

  *e* is the number of ranks

  1 = single-rank

  2 = dual-rank

  4 = quad-rank

  *ff* is the device organization (bit width)

  4 = x4 organization (4 DQ lines per SDRAM)

  8 = x8 organization

  16 = x16 organization

  *wwwww* is the DIMM bandwidth, in MBps

  6400 = 6.40 GBps (PC3-800 SDRAMs, 8-byte primary data bus)

  8500 = 8.53 GBps (PC3-1066 SDRAMs, 8-byte primary data bus)

  10600 = 10.66 GBps (PC3-1333 SDRAMs, 8-byte primary data bus)

  12800 = 12.80 GBps PC3-1600 SDRAMs, 8-byte primary data bus)

  *m* is the DIMM type

  E = Unbuffered DIMM (UDIMM) with ECC (x72-bit module data bus)

  R = Registered DIMM (RDIMM)

  U = Unbuffered DIMM with no ECC (x64-bit primary data bus)

  *aa* is the CAS latency, in clocks at maximum operating frequency

  *bb* is the JEDEC SPD Revision Encoding and Additions level

  *cc* is the reference design file for the design of the DIMM
- The following rules apply to single-rank and dual-rank DDR3 DIMM speed as it relates to the number of DIMMs in a channel:
  - When you install 1 DIMM per channel, the memory runs at 1333 MHz
  - When you install 2 DIMMs per channel, the memory runs at 1066 MHz
  - All channels in a server run at the fastest common frequency
- The maximum memory speed is determined by the combination of the microprocessor, DIMM speed, and the number of DIMMs installed in each channel.
- In two-DIMM-per-channel configuration, a server with an Intel Xeon X5600 series microprocessor automatically operates with a maximum memory speed of up to 1333 MHz when one of the following conditions is met:
  - Two 1.5 V single-rank or dual-rank RDIMMs are installed in the same channel. In the Setup utility, **Memory speed** is set to **Max performance** mode

– Two 1.35 V single-rank or dual-ranl RDIMMs are installed in the same channel. In the Setup utility, **Memory speed** is set to **Max performance** and **LV-DIMM power** is set to **Enhance performance** mode. The 1.35 V RDIMMs will function at 1.5 V

- The server supports a maximum of 12 single-rank or dual-rank registered DIMMs (RDIMMs).
- The server supports three single-rank or dual-rank DIMMs per channel. The following table shows an example of the maximum amount of memory that you can install, using ranked RDIMMs.

*Table 5. Maximum memory installation using ranked RDIMMs*

| DIMM type | Maximum number of DIMMs | DIMM size | Total memory |
|---|---|---|---|
| Single-rank | 12 | 1 GB | 12 GB |
| Singe-rank | 12 | 2 GB | 24 GB |
| Dual-rank | 12 | 2 GB | 24 GB |
| Dual-rank | 12 | 4 GB | 48 GB |
| Dual-rank | 12 | 8 GB | 96 GB |

- The RDIMM options that are available for the server are 1 GB, 2 GB, 4 GB, and 8 GB. The server supports a minimum of 1 GB and a maximum of 96 GB of system memory.

  **For 32-bit operating systems only:** Some memory is reserved for various system resources and is unavailable to the operating system. The amount of memory that is reserved for system resources depends on the operating system, the configuration of the server, and the configured PCI devices. To view the total amount of installed memory and the amount of configured memory, run the Setup utility. For additional information, see “Using the Setup utility” on page 84.
- A minimum of one DIMM must be installed for each microprocessor. For example, you must install a minimum of two DIMMs if the server has two microprocessors. However, to improve system performance, install a minimum of three DIMMs for each microprocessor.

  **Note:** You can install DIMMs for microprocessor 2 as soon as you install microprocessor 2; you do not have to wait until all of the DIMM connectors for microprocessor 1 are filled.
- If you install a ServeRAID-M1015 SAS/SATA adapter, make sure at least 2 GB of memory is installed in the server before you run DSA from a bootable CD.
- 1.35V DIMMs are only supported on server models with an Intel Xeon™ 5600 series microprocessor.

## DIMM installation sequence

The server requires at least one DIMM per microprocessor. Depending on the server models, the server may come with one 2 GB RDIMM or 4 GB RDIMM, or three 4 GB RDIMMs.

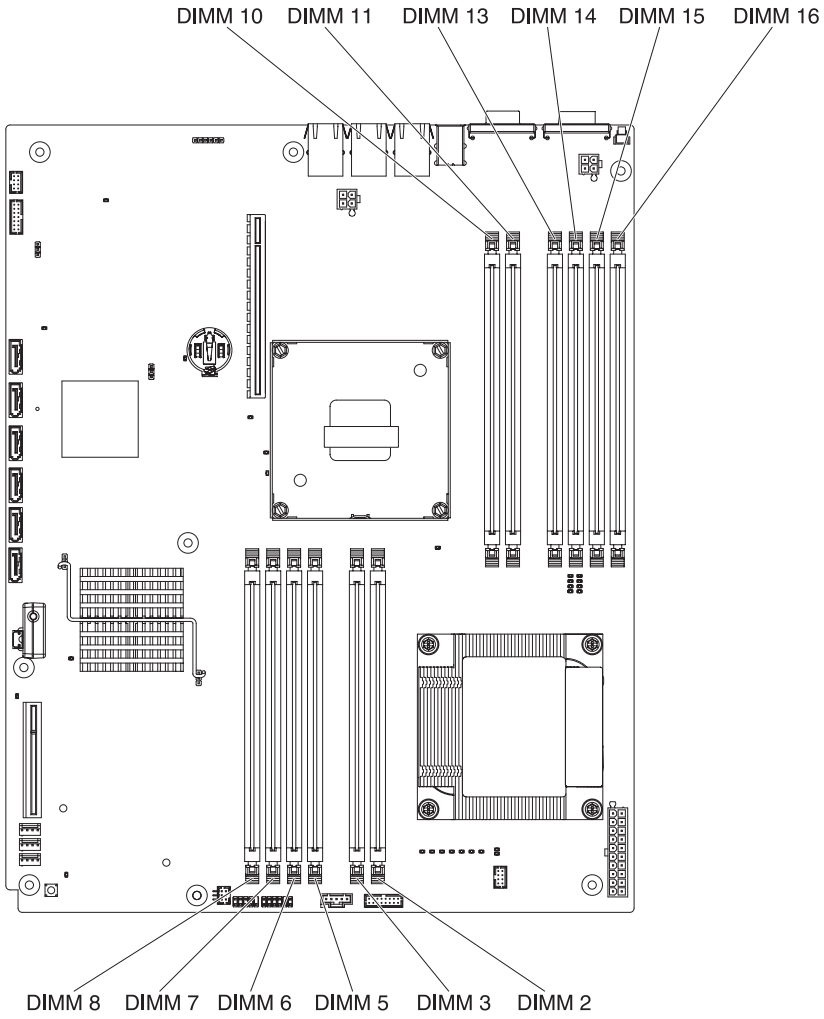


When you install additional DIMMs, install them in the order shown in Table 6, to maintain performance.

*Table 6. Non-mirroring (normal) mode DIMM installation sequence*

| Microprocessors installed | DIMM connector population sequence |
|---|---|
| 1 | 3, 6, 8, 2, 5, 7 |
| 2 | 3, 11, 6, 14, 8, 16, 2, 10, 5, 13, 7, 15, |

The following table lists the DIMM connectors on each memory channel.

*Table 7. Connectors on each memory channel*

| Memory channel | DIMM connectors |
|---|---|
| Channel 0 | 2, 3, 10, 11 |
| Channel 1 | 5, 6, 13, 14 |
| Channel 2 | 7, 8, 15, 16 |

## Memory mirroring

Memory-mirroring mode replicates and stores data on two pairs of DIMMs within two channels simultaneously. If a failure occurs, the memory controller switches from the primary pair of memory DIMMs to the backup pair of DIMMs. You must

enable memory mirroring through the Setup utility. For details about enabling memory mirroring, see “Using the Setup utility” on page 84. When you use the memory mirroring feature, consider the following information:

- To support memory mirroring, the DIMMs in each pair must match but the pairs can be different from each other. For example, the first pair of DIMMs must match and the second pair of DIMMs must match; however, the DIMM type for the first and second pair of DIMMs can be different from each other.
- The maximum available memory is reduced to half of the installed memory when memory mirroring is enabled. For example, if you install 64 GB of memory, only 32 GB of addressable memory is available when you use memory mirroring.
- Channel 2 DIMM connectors 8 ,7, 15, and 16 are not used in memory-mirroring mode.

The following table lists the installation sequence for installing DIMMs in memory-mirroring mode.

*Table 8. Memory-mirroring mode DIMM population sequence*

| DIMMs | Number of installed microprocessors | DIMM connector |
|---|---|---|
| First pair of DIMMs | 1 | 3, 6 |
| Second pair of DIMMs | 1 | 2, 5 |
| Fourth pair of DIMMs | 2 | 14, 11 |
| Fifth pair of DIMMs | 2 | 13, 10 |
| **Note:** DIMM connectors 7, 8, 15, and 16 are not used in memory-mirroring mode. | | |

## Online-spare memory

The memory online-spare feature disables the failed memory from the system configuration and activates an online-spare DIMM to replace the failed active DIMM. You can enable either online-spare memory or memory mirroring in the Setup utility (see “Using the Setup utility” on page 84). When you use the memory online-spare feature, consider the following information:

- The memory online-spare feature is supported on server models with an Intel Xeon™ 5600 series microprocessor.
- When you enable the memory online-spare feature, you must install three DIMMs per microprocessor at a time. The first DIMM must be in channel 0, the second DIMM in channel 1, and the third DIMM in channel 2. The DIMMs must be identical in size, type, rank, and organization, but not in speed. The channels run at the speed of the slowest DIMM in any of the channels.
- The maximum available memory is reduced to 2/3 of the installed memory when memory online-spare mode is enabled. For example, if you install 96 GB of memory using RDIMMs, only 64 GB of addressable memory is available when you use memory online-spare.

The following table shows the installation sequence for installing DIMMs for each microprocessor in memory online-spare mode:

*Table 9. Memory online-spare mode DIMM population sequence*

| Installed Microprocessor | DIMM connector |
|---|---|
| Microprocessor 1 | 3, 6, 8 |
| | 3, 6, 8, 2, 5, 7 |
| Microprocessor 2 | 11, 14, 16 |
| | 11, 14, 16, 10, 13, 15 |

## Installing a DIMM

To install a DIMM, complete the following steps:

1. Read the safety information that begins on page vii and “Installation guidelines” on page 28.
2. Turn off the server and peripheral devices, and disconnect the power cord and all external cables (see “Turning off the server” on page 18).
3. Remove the server cover (see “Removing the cover” on page 37).
4. Remove the air baffle (see “Removing the air baffle” on page 38).
5. Open the retaining clip on each end of the DIMM connector.

   **Attention:** To avoid breaking the retaining clips or damaging the DIMM connectors, open and close the clips gently.

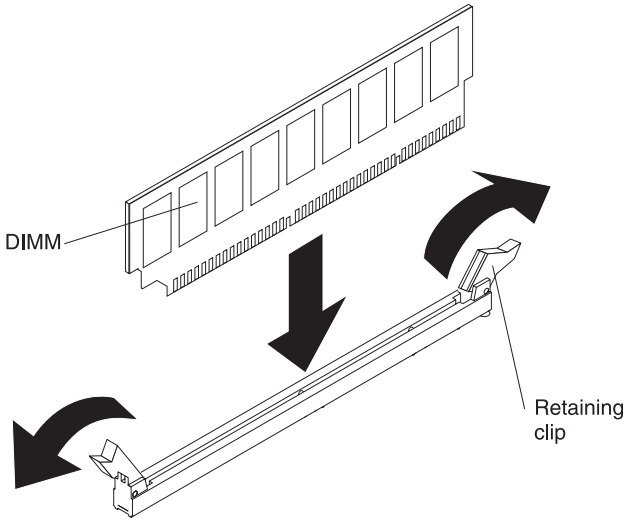


6. Touch the static-protective package that contains the DIMM to any unpainted metal surface on the server. Then, remove the DIMM from the package.
7. Turn the DIMM so that the DIMM keys align correctly with the connector.
8. Insert the DIMM into the connector by aligning the edges of the DIMM with the slots at the ends of the DIMM connector. Firmly press the DIMM straight down into the connector by applying pressure on both ends of the DIMM simultaneously. The retaining clips snap into the locked position when the DIMM is firmly seated in the connector.

   **Important:** If there is a gap between the DIMM and the retaining clips, the DIMM has not been correctly inserted; open the retaining clips, remove the DIMM, and then reinsert it.

If you have other devices to install or remove, do so now. Otherwise, go to “Completing the installation” on page 78. Go to the Setup utility and make sure all the installed DIMMs are present and enabled.

## Installing the simple-swap hard disk drive backplate

To install the replacement simple-swap hard disk drive backplate, complete the following steps.

1. Read the safety information that begins on page vii and “Installation guidelines” on page 28.
2. Turn off the server and peripheral devices, and disconnect the power cord and all external cables (see “Turning off the server” on page 18).
3. Remove all simple-swap hard disk drives (see “Removing a simple-swap hard disk drive” on page 53).
4. Remove the server cover (see “Removing the cover” on page 37).
5. You may remove the system fan cage to obtain more room:
   a. Make a note of where cables are attached to the fan board; then, disconnect them from the connectors on the fan board.
   b. Grasp the system fan cage by the blue grip points.
   c. Press the retention latches toward each other; then, lift the system fan cage out of the server.

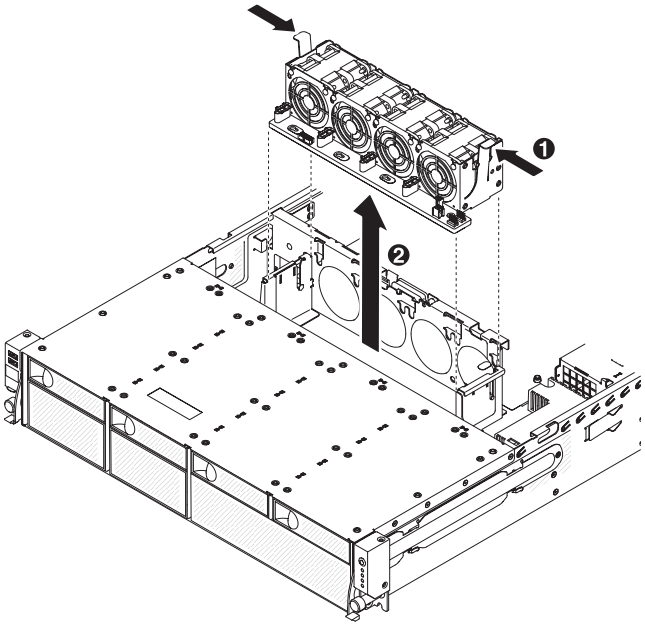


6. Remove the backplate from the server. Press the release latches and rotate out the top of the backplate; then, lift the backplate out of the server by pulling and lifting it up.

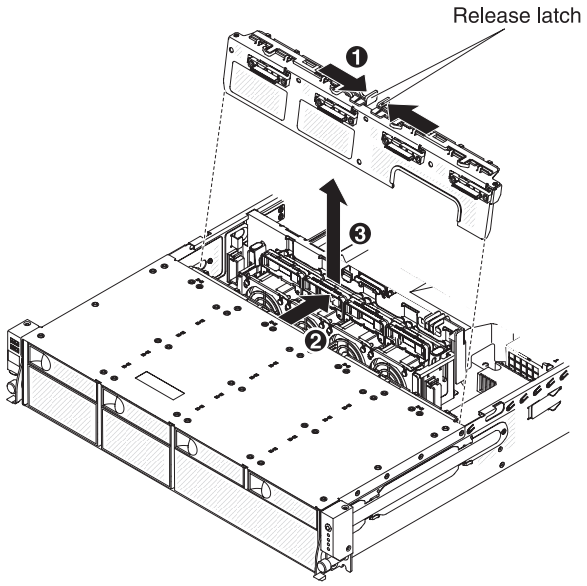


7. Touch the static-protective package that contains the new backplate to any unpainted metal surface on the server. Then, remove the new backplate from the package.
8. Align the backplate with the slot on the chassis; then, lower the backplate into the server. Make sure the locating plates securely engage the bottom of the backplate.
9. Press the release latches; then, rotate the top of the backplate toward the front of the server until it locks into place.

   **Note:** Make sure the backplate is engaged into place by the locating plates and that it is securely installed in the server.

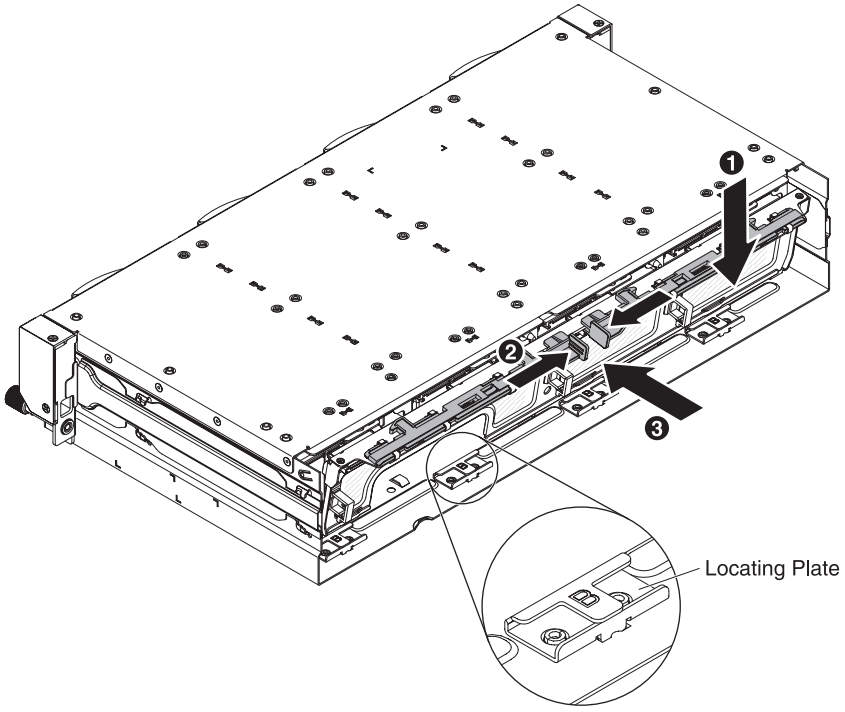


10. Replace the system fan cage if you removed it:

a. Align the system fan cage with the guide rails on the fan cage bracket.
b. Lower the system fan cage into the fan cage bracket until the system fan cage clicks into place.

**Note:** Make sure no cables are pinched.

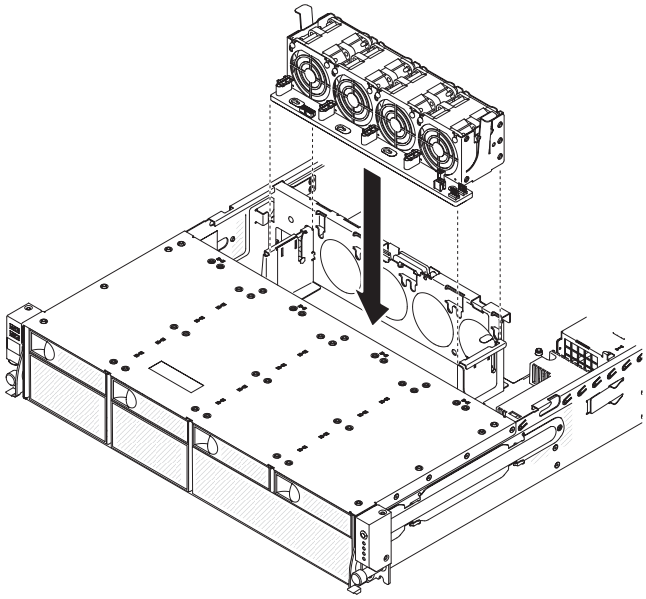

c. Reconnect the fan cables.

**Attention:** If the fan power cable is not connected correctly, the server will not start up when you turn on power.

- To connect the fan power cable on the fan board, orient the fan power connector so that the release tab points faces the rear of the server; then, connect the cable to the connector on the system board.
- To connect the other end of the fan power cable on the power-supply paddle card, orient the fan power cable so that the release tab faces the front of the server; then, connect the cable to the connector on the power-supply paddle card.

The following illustration shows the correct fan power cable connections.

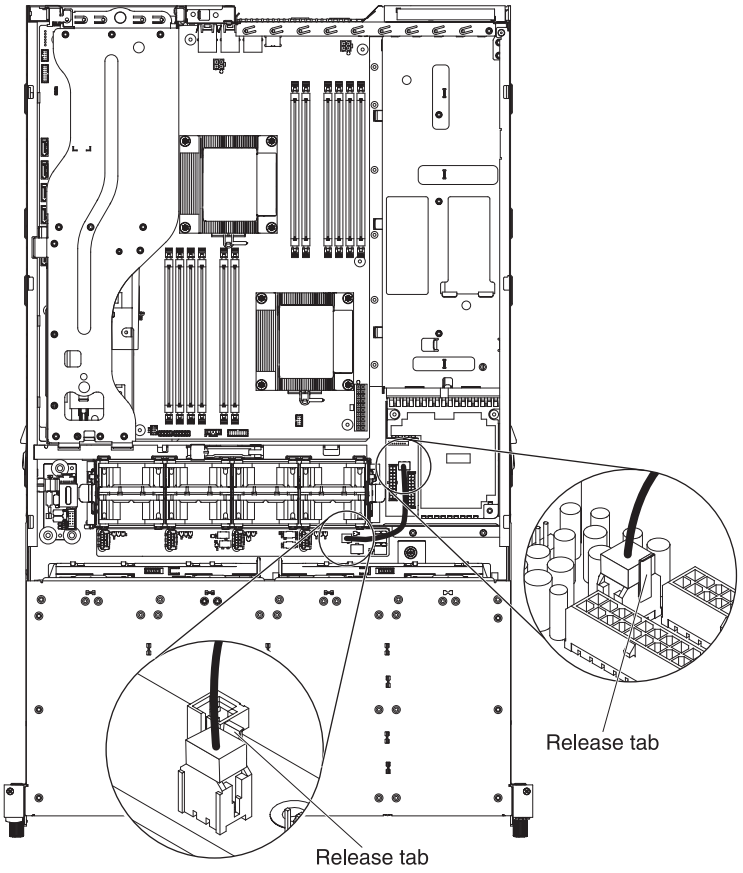


11. Connect the power cables and the signal cable (see “Internal cable routing and connectors” on page 31); then, secure the cables with any retention clips.

If you have other devices to install or remove, do so now. Otherwise, go to “Completing the installation” on page 78. Go to the Setup utility and make sure all the installed DIMMs are present and enabled.

## Installing a second microprocessor

The following notes describe the type of microprocessor that the server supports and other information that you must consider when you install a microprocessor:

- The server supports Intel Xeon scalable multi-core microprocessors which are designed for the LGA 1366 socket. These microprocessors are 64-bit quad-core or six-core microprocessors with an integrated memory controller, quick-path interconnect, and shared last cache. See http://www.ibm.com/servers/eserver/serverproven/compat/us/ for a list of supported microprocessors.
- Do not install an Intel Xeon™ 5500 series microprocessor and an Xeon™ 5600 series microprocessor in the same server.
- The server supports up to two microprocessors. If the server comes with one microprocessor, you can install a second microprocessor.
- Both microprocessors must have the same QuickPath Interconnect (QPI) link speed, integrated memory controller frequency, core frequency, power segment, cache size, and type.
- Read the documentation that comes with the microprocessor to determine whether you must update the server firmware for the server. To download the most current level of server firmware and many other code updates for your server, complete the following steps:
  1. Go to http://www.ibm.com/systems/support/.
  2. Under **Product support**, click **System x**.
  3. Under **Popular links**, click **Software and device drivers**.
  4. Click **System x3620 M3** to display the matrix of downloadable files for the server.
- (Optional) Obtain an SMP-capable operating system. For a list of supported operating systems and optional devices, see http://www.ibm.com/servers/eserver/serverproven/compat/us/.
- To order additional microprocessor optional devices, contact your IBM marketing representative or authorized reseller.
- The microprocessor speeds are automatically set for this server; therefore, you do not have to set any microprocessor frequency-selection jumpers or switches.
- If you have to replace a microprocessor, call for service.
- If the thermal-grease protective cover (for example, a plastic cap or tape liner) is removed from the heat sink, do not touch the thermal grease on the bottom of the heat sink or set down the heat sink.
- Do not remove the first microprocessor from the system board to install the second microprocessor.

**Attention:**

- Microprocessors are to be installed only by trained service technicians.
- A startup (boot) microprocessor must always be installed in microprocessor socket 1 on the system board.
- To ensure correct server operation when you install an additional microprocessor, use microprocessors that are compatible and install at least one DIMM in a DIMM connector for microprocessor 2.

To install an additional microprocessor, complete the following steps:

1. Read the safety information that begins on page vii and “Installation guidelines” on page 28.

2. Turn off the server and disconnect all power cords and external cables (see “Turning off the server” on page 18).
3. Remove the server cover (see “Removing the cover” on page 37).
4. Remove the air baffle (see “Removing the air baffle” on page 38).
5. Locate the second microprocessor socket on the system board (see “System-board internal connectors” on page 20).
6. Remove the microprocessor socket dust cover from the surface of the microprocessor socket, if one is present. Store the dust cover in a safe place.
7. Install the microprocessor:
   a. Rotate the microprocessor release lever on the socket from its closed and locked position until it stops in the fully open position.

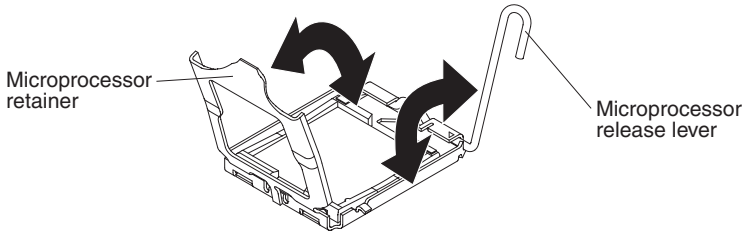


   b. Rotate the hinged microprocessor bracket frame into the open position.
   c. Touch the static-protective package that contains the microprocessor to any unpainted metal surface on the server. Then, remove the microprocessor from the package.

      **Attention:**

      - Do not touch the microprocessor contacts; handle the microprocessor by the edges only. Contaminants on the microprocessor contacts, such as oil from your skin, can cause connection failures between the contacts and the socket.
      - Handle the microprocessor carefully. Dropping the microprocessor during installation or removal can damage the contacts.
      - Do not use excessive force when you press the microprocessor into the socket.
      - Make sure that the microprocessor is oriented and aligned and positioned in the socket before you try to close the lever.

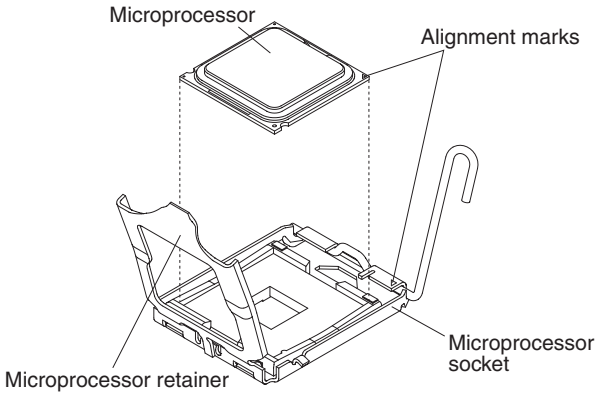


   d. Align the microprocessor with the socket (note the alignment mark and the position of the notches); then, carefully place the microprocessor straight down on the socket. Close the microprocessor bracket frame.

**Attention:** The microprocessor fits only one way on the socket. You must place a microprocessor straight down on the socket to avoid damaging the pins on the socket. The pins on the socket are fragile. Any damage to the pins may require replacing the system board.

e. Carefully close the microprocessor release lever to secure the microprocessor in the socket.

8. Install a heat sink on the microprocessor:

   **Attention:** Do not touch the thermal grease on the bottom of the heat sink or set down the heat sink after you remove the plastic cover. Touching the thermal grease will contaminate it. If the thermal grease is contaminated, call IBM service and support to request a replacement thermal grease kit. For information about installing the replacement thermal grease, see "Thermal grease" on page 74.

   a. Remove the plastic protective cover from the bottom of the heat sink.

   b. Align the heat sink so that the arrows on the label point toward the system fans.

   c. Align the screw holes on the heat sink with the holes on the system board; then, place the heat sink on the microprocessor with the thermal-grease side down.

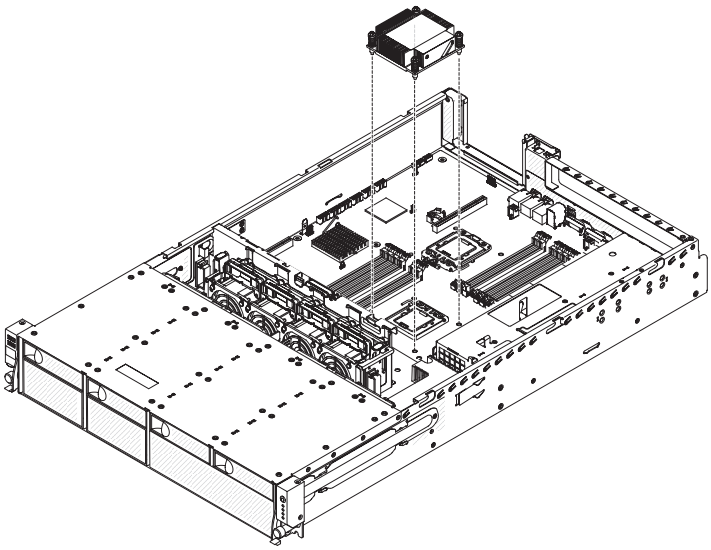

   d. Tighten the screws with a screwdriver, alternating among the screws until they are tight. If possible, each screw should be rotated two full rotations at a time. Repeat until the screws are tight. Do not overtighten the screws by using excessive force.

If you have other devices to install or remove, do so now. Otherwise, go to "Completing the installation" on page 78.

## Thermal grease

The thermal grease must be replaced whenever the heat sink has been removed from the top of the microprocessor and is going to be reused or when debris is found in the grease.

To replace damaged or contaminated thermal grease on the microprocessor and heat exchanger, complete the following steps:

1. Place the heat-sink assembly on a clean work surface.
2. Remove the cleaning pad from its package and unfold it completely.
3. Use the cleaning pad to wipe the thermal grease from the bottom of the heat exchanger.

   **Note:** Make sure that all of the thermal grease is removed.
4. Use a clean area of the cleaning pad to wipe the thermal grease from the microprocessor; then, dispose of the cleaning pad after all of the thermal grease is removed.

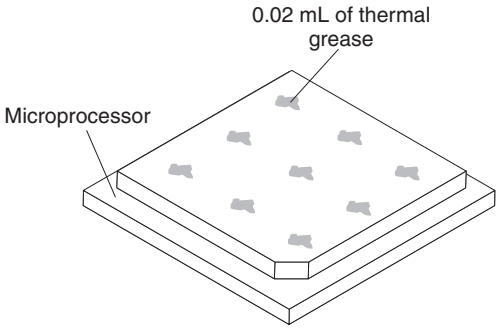


5. Use the thermal-grease syringe to place nine uniformly spaced dots of 0.02 mL each on the top of the microprocessor.

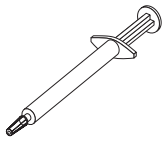

   **Note:** 0.01mL is one tick mark on the syringe. If the grease is properly applied, approximately half (0.22 mL) of the grease will remain in the syringe.

## Installing a hot-swap power supply

The server supports a maximum of two hot-swap ac power supplies. Power supply 1 is the default/primary power supply. If power supply 1 fails, you must replace the power supply immediately.

**Statement 5:**

**CAUTION:**
**The power control button on the device and the power switch on the power supply do not turn off the electrical current supplied to the device. The device also might have more than one power cord. To remove all electrical current from the device, ensure that all power cords are disconnected from the power source.**

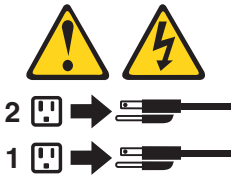


**Statement 8:**

**CAUTION:**
**Never remove the cover on a power supply or any part that has the following label attached.**

**Hazardous voltage, current, and energy levels are present inside any component that has this label attached. There are no serviceable parts inside these components. If you suspect a problem with one of these parts, contact a service technician.**

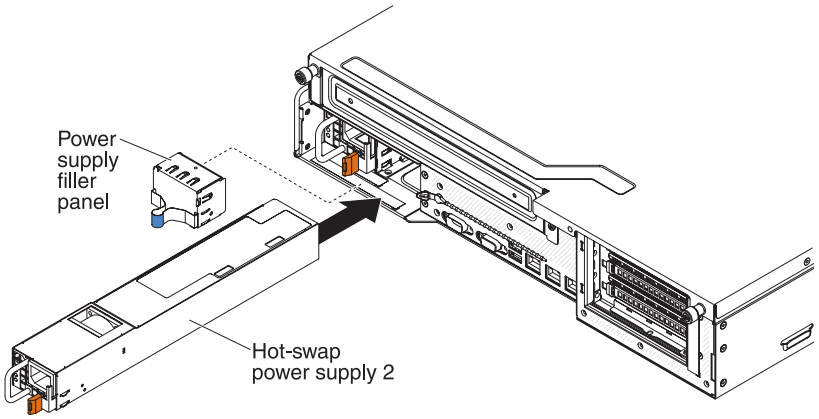


To install an ac power supply, complete the following steps:

1. Read the safety information that begins on page vii and “Installation guidelines” on page 28.
2. Remove the power-supply filler panel from the empty power-supply bay by pinching the side clip and pulling the power-supply filler panel from the bay. Save the power-supply filler panel in case you remove the power supply at a later time.

   **Important:** During normal operation, each power-supply bay must contain either a power supply or power-supply filler panel for proper cooling.
3. Slide the ac power supply into the bay until the retention latch clicks into place.
4. Connect the power cord for the new ac power supply to the power-cord connector on the power supply.

   The following illustration shows the ac power-supply connectors on the rear of the server.

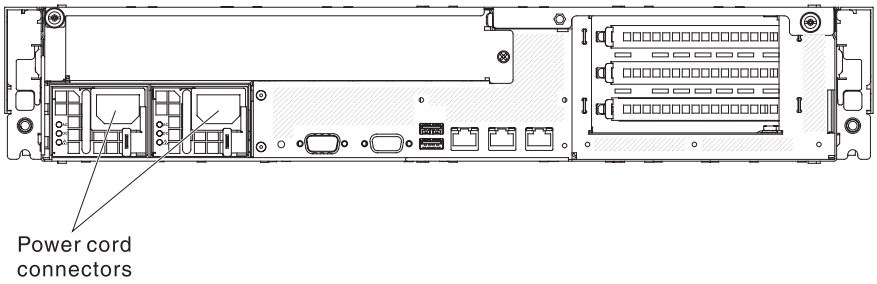


5. Route the power cord through the power-supply handle and through any cable clamps on the rear of the server, to prevent the power cord from being accidentally pulled out when you remove the server from the rack.
6. Connect the power cord to a properly grounded electrical outlet.
7. If the server is powered on, make sure that the error LED on the power supply is not lit, and that the dc power LED and ac power LED on the power supply are lit, indicating that the power supply is operating correctly.

If you have other devices to install or remove, do so now. Otherwise, go to “Completing the installation” on page 78.

## Installing a USB hypervisor memory key

Hypervisor is a virtualization platform that enables multiple operating systems to run on a host computer at the same time. Support for hypervisor is available with the purchase and installation of an optional USB hypervisor memory key, with embedded hypervisor software.

To install the USB hypervisor memory key, complete the following steps:

1. Read the safety information that begins on page vii and “Installation guidelines” on page 28.
2. Turn off the server and peripheral devices and disconnect all power cords and external cables (see “Turning off the server” on page 18).
3. Remove the cover (see “Removing the cover” on page 37).
4. Locate the USB hypervisor connector on the USB connector board in the server.
5. Push down the blue locking collar on the USB hypervisor connector (the unlocked position).

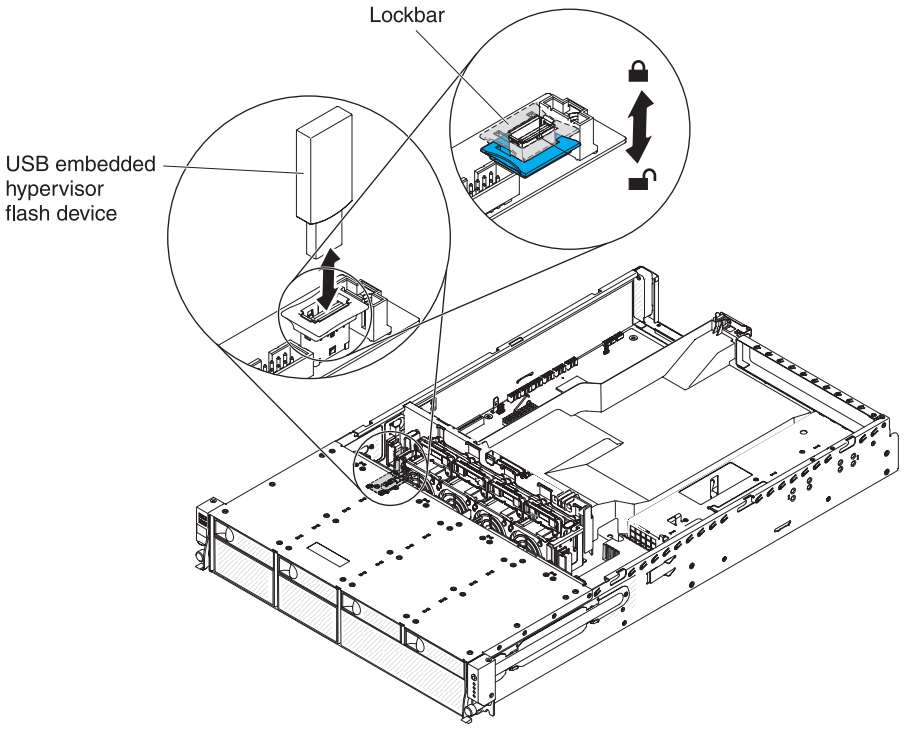


6. Insert the hypervisor memory key into the USB hypervisor connector.
7. Pull up the blue lock on the USB hypervisor connector to the locked position, to secure the memory key in position.

If you have other devices to install or remove, do so now. Otherwise, go to “Completing the installation” on page 78.

**Note:** You must configure the server to boot from the hypervisor USB drive. See Chapter 3, “Configuring the server,” on page 83 for information about enabling the embedded hypervisor.

## Completing the installation

To complete the installation, complete the following steps:

1. If you removed the PCI riser-card assembly, replace the riser-card assembly (see “Installing the PCI riser-card assembly”).
2. If you removed the air baffle, install it (see “Installing the air baffle” on page 79).
3. If you removed the server cover, replace it (see “Installing the server cover” on page 80).
4. Install the server in a rack. See the *Rack Installation Instructions* that come with the server for complete rack installation and removal instructions.
5. To attach peripheral devices and connect the power cords, see “Connecting the external cables” on page 81.

## Installing the PCI riser-card assembly

To install the PCI riser-card assembly, complete the following steps:

1. Read the safety information that begins on page vii and “Installation guidelines” on page 28.
2. Make sure that the server and all peripheral devices are turned off and that the power cords and all external cables are disconnected.
3. Reinstall any adapters and reconnect any internal cables that you removed in other procedures.
4. Align the PCI riser-card assembly with the alignment pin and the guide rails on the chassis.

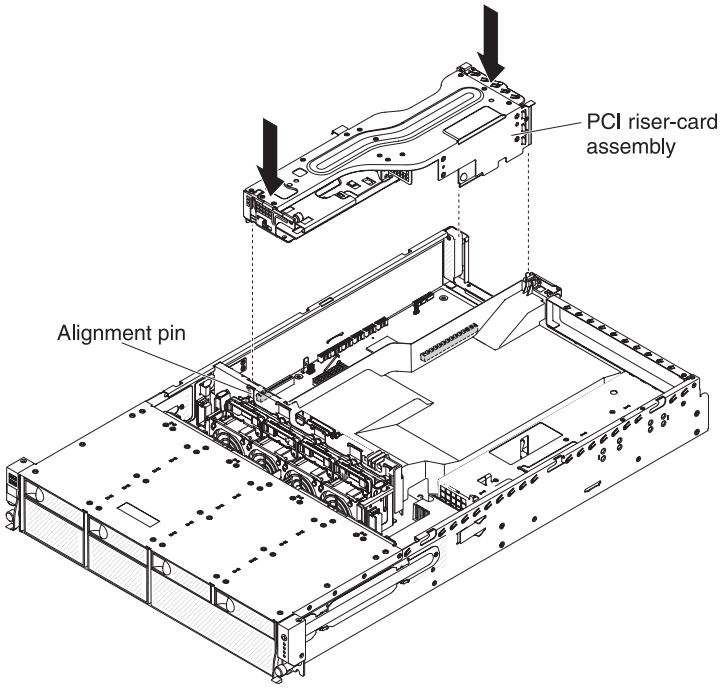


5. Press down on the blue touch points on the PCI riser-card assembly to install the assembly in the server. Make sure that the PCI riser-card assembly is fully seated in the PCI connectors on the system board.

   **Attention:** Make sure that the cables are not pinched.

If you have other devices to install, do so now. Otherwise, go to “Completing the installation.”

## Installing the air baffle

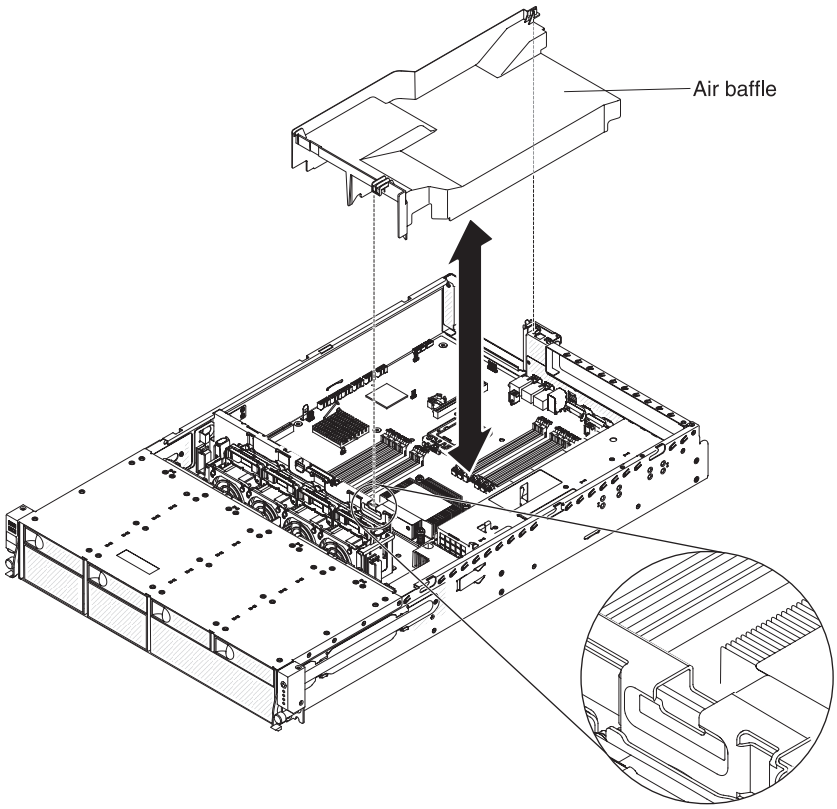


To replace the air baffle, complete the following steps:

1. Align the tabs on the air baffle with the slots on the chassis.
2. Lower the air baffle into the server. Make sure that the tabs on the air baffle are inserted into the holes on the chassis.

   **Attention:** For proper cooling and airflow, replace the air baffle before you turn on the server. Operating the server with the air baffle removed might damage server components.

## Installing the server cover

To install the server cover, complete the following steps:

1. Make sure that all internal cables are correctly routed.
2. Align the cover over the server (toward the rear of the server) until the cover edges slip into position over the chassis.

   **Attention:** Before sliding the cover forward, make sure that all the tabs on both the front, rear, and side of the cover engage the chassis correctly. If all the tabs do not engage the chassis correctly, it will be hard to remove the cover later.
3. Slide the cover forward toward the front of the server until the cover is completely closed.

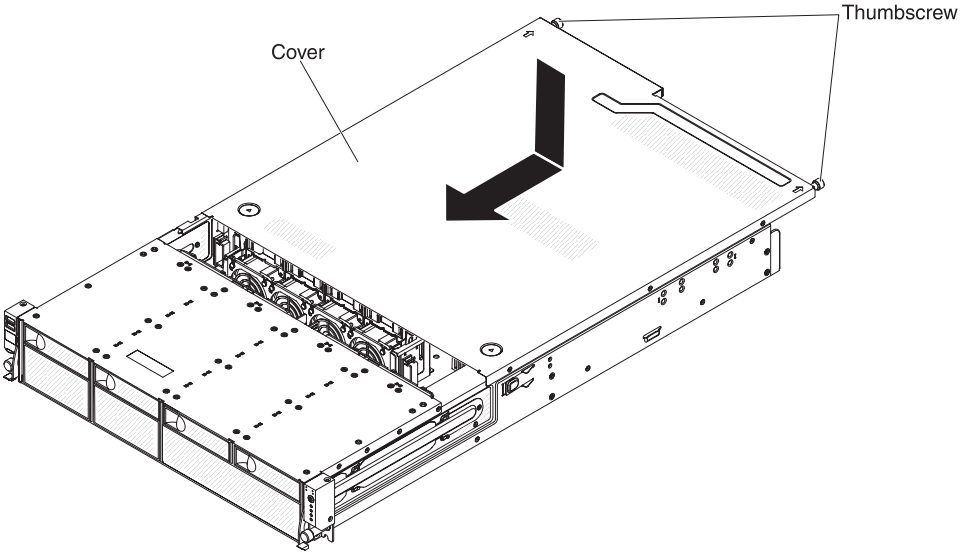


4. Tighten the thumbscrews on the rear of the cover to secure the cover to the chassis.
5. Install the server into the rack enclosure and tighten the two front thumbscrews to secure the server in the rack.

   **Attention:** Two or more people are required to install the system in a rack cabinet.

## Connecting the external cables

The following illustrations show the locations of the input and output connectors on the front and rear of the server.

### Front view

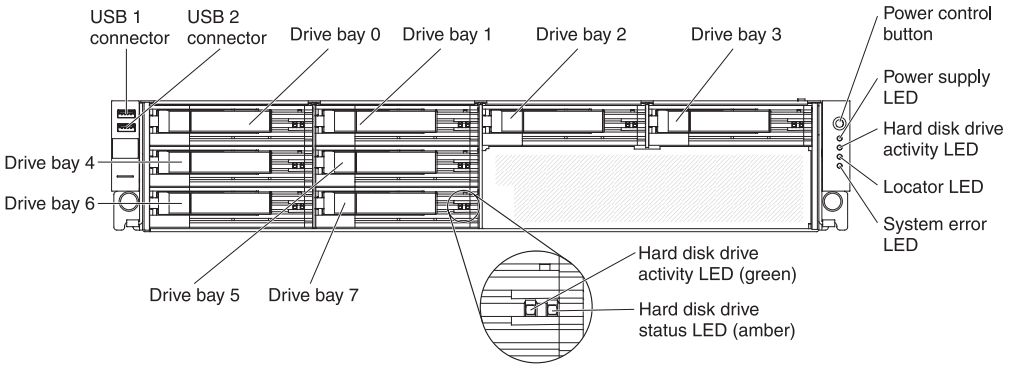


### Rear view

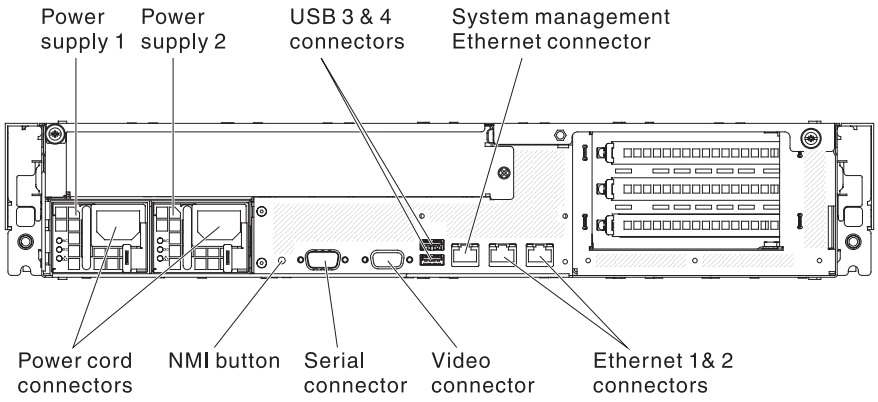


See the documentation that comes with any external devices for additional cabling instructions. It might be easier for you to route cables before you connect the devices to the server.

Cable identifiers may be printed on the cables that come with the server and optional devices. Use these identifiers to connect the cables to the correct connectors.

If the server comes with an installed operating system, see the documentation that comes with the operating system for additional cabling instructions.

## Updating the server configuration

When you start the server for the first time after you add or remove an internal device, external SAS device, or USB keyboard or mouse, you might receive a message that the configuration has changed. After the POST fails three times, the Setup utility starts automatically so that you can save the new configuration settings. For more information, see Chapter 3, “Configuring the server,” on page 83.

Some optional devices have device drivers that you must install. See the documentation that comes with each optional device for information about installing device drivers.

The server comes with at least one multi-core microprocessor, which enables the server to operate as a symmetric multiprocessing (SMP) server. You might have to upgrade the operating system to support SMP. For more information, see “Using the ServerGuide Setup and Installation CD” on page 90 and the operating-system documentation.

If you have installed or removed a hard disk drive, see “Using the LSI Logic Configuration Utility program” on page 97 or “Starting the Intel Matrix Storage Manager option ROM program” on page 99.

If you have installed a USB hypervisor memory key on the system daughter board, see the documentation that comes with the hypervisor memory key. Hypervisor enables guest operating systems to function on the server.

For information about configuring the integrated Gigabit Ethernet controller, see “Configuring the Gigabit Ethernet controller” on page 95.

# Chapter 3. Configuring the server

The following configuration programs come with the server:

- **Setup utility**

  The Setup utility (formerly called the Configuration/Setup Utility program) is part of the IBM System x Server Firmware. Use it to change interrupt request (IRQ) settings, change the startup-device sequence, set the date and time, and set passwords. For information about using this program, see “Using the Setup utility” on page 84.

- **Boot Menu program**

  The Boot Menu program is part of the IBM System x Server Firmware. Use it to override the startup sequence that is set in the Setup utility and temporarily assign a device to be first in the startup sequence.

- **IBM *ServerGuide Setup and Installation* CD**

  The ServerGuide program provides software-setup tools and installation tools that are designed for the server. Use this CD during the installation of the server to configure basic hardware features, such as an integrated SAS controller with RAID capabilities, and to simplify the installation of your operating system. For information about obtaining and using this CD, see “Using the ServerGuide Setup and Installation CD” on page 90.

- **Integrated management module**

  Use the integrated management module (IMM) for configuration, to update the firmware and sensor data record/field replaceable unit (SDR/FRU) data, and to remotely manage a network. For information about using the IMM, see “Using the integrated management module” on page 92.

- **VMware embedded USB hypervisor**

  The VMware embedded USB hypervisor is available on the server models that come with an installed IBM USB Memory Key for VMware hypervisor. You can order an optional USB hypervisor memory key, if one did not come with your server. The USB hypervisor memory key is installed in the USB connector on the system daughter board. Hypervisor is virtualization software that enables multiple operating systems to run on a host computer at the same time. For more information about using the embedded hypervisor, see “Using the USB memory key for VMware hypervisor” on page 93.

- **Remote presence capability and blue-screen capture**

  The remote presence and blue-screen capture feature are integrated into the integrated management module (IMM). The virtual media key is required to enable these features. When the optional virtual media key is installed in the server, it activates the remote presence functions. Without the virtual media key, you will not be able to access the network remotely to mount or unmount drives or images on the client system. However, you will still be able to access the host graphical user interface through the Web interface without the virtual media key. You can order an optional IBM Virtual Media Key, if one did not come with your server. For more information about how to enable the remote presence function, see “Using the remote presence capability and blue-screen capture” on page 93.

- **Ethernet controller configuration**

  For information about configuring the Ethernet controller, see “Configuring the Gigabit Ethernet controller” on page 95.

© Copyright IBM Corp. 2010

- **LSI Configuration Utility program**

  Use the LSI Configuration Utility program to configure the SAS/SATA controller with RAID capabilities and the devices that are attached to it. For information about using this program, see “Starting the LSI Logic Configuration Utility program” on page 98.

  The following table lists the different server configurations and the applications that are available for configuring and managing RAID arrays.

*Table 10. Server configuration and applications for configuring and managing RAID arrays*

| Server configuration | RAID array configuration (before operating system is installed) | RAID array management (after operating system is installed) |
|---|---|---|
| ServeRAID-BR10il v2 adapter (LSI 1064E) | LSI Utility (Setup utility, press Ctrl+C), ServerGuide | MegaRAID Storage Manager (MSM), Director |
| ServeRAID-M5014 adapter (LSI SAS2108) | MegaRAID BIOS Configuration Utility, ServerGuide | MegaRAID Storage Manager (MSM), Director |
| ServeRAID-M5015 adapter (LSI SAS2108) | MegaRAID BIOS Configuration Utility, ServerGuide | MegaRAID Storage Manager (MSM), Director |
| ServeRAID-M1015 adapter (LSI SAS2008) | MegaRAID BIOS Configuration Utility, ServerGuide | MegaRAID Storage Manager (MSM), Director |

- **IBM Advanced Settings Utility (ASU) program**

  Use this program as an alternative to the Setup utility for modifying UEFI settings and IMM settings. Use the ASU program online or out-of-band to modify UEFI settings from the command line without the need to restart the server to access the Setup utility. For more information about using this program, see “IBM Advanced Settings Utility program” on page 101.

## Using the Setup utility

Use the Setup utility, formerly called the Configuration/Setup Utility program, to perform the following tasks:

- View configuration information
- View and change assignments for devices and I/O ports
- Set the date and time
- Set the startup characteristics of the server and the order of startup devices
- Set and change settings for advanced hardware features
- View, set, and change settings for power-management features
- View and clear error logs
- Resolve configuration conflicts

## Starting the Setup utility

To start the Setup utility, complete the following steps:

1. Turn on the server.

   **Note:** Approximately 40 seconds after the server is connected to ac power, the power-control button becomes active.

2. When the prompt <F1> Setup is displayed, press F1. If you have set an administrator password, you must type the administrator password to access the full Setup utility menu. If you do not type the administrator password, a limited Setup utility menu is available.
3. Select the settings to view or change.

## Setup utility menu choices

The following choices are on the Setup utility main menu. Depending on the version of the firmware, some menu choices might differ slightly from these descriptions.

- **System Information**

  Select this choice to view information about the server. When you make changes through other choices in the Setup utility, some of those changes are reflected in the system information; you cannot change settings directly in the system information.

  – **System Summary**

    Select this choice to view configuration information, including the ID, speed, and cache size of the microprocessors, machine type and model of the server, the serial number, the system UUID, and the amount of installed memory. When you make configuration changes through other options in the Setup utility, the changes are reflected in the system summary; you cannot change settings directly in the system summary.

  – **Product Data**

    Select this choice to view the system-board identifier, and the revision level or issue date of the integrated management module firmware and diagnostics code.

- **System Settings**

  Select this choice to view or change the server component settings.

  – **Processors**

    Select this choice to view or change the processor settings.

  – **Memory**

    Select this choice to view or change the memory settings. To configure memory mirroring, select **System Settings → Memory** , and then select **Memory Channel Mode → Mirroring**.

  – **Devices and I/O Ports**

    Select this choice to view or change assignments for devices and input/output (I/O) ports. You can configure the serial ports; configure remote console redirection; enable or disable integrated Ethernet controllers, the SAS/SATA controller, SATA optical drive channels, and PCI slots; and view the system Ethernet MAC addresses. If you disable a device, it cannot be configured, and the operating system will not be able to detect it (this is equivalent to disconnecting the device).

  – **Power**

    Select this choice to view or change power capping to control consumption, processors, and performance states.

  – **Operating Modes**

    Select this choice to view or change the operating profile (performance and power utilization).

    **Note:** When you change from Custom Mode to Performance Mode and back to Custom Mode again, the Turbo Mode field still displays in the screen. You

cannot configure Turbo Mode settings in Custom Mode. To have this screen display configurable fields properly, you may restore the Setup utility to the factory default settings.

– **Integrated Management Module**

  Select this choice to view or change the settings for the integrated management module.

  - **POST Watchdog Timer**

    Select this choice to view or enable the POST watchdog timer.

  - **POST Watchdog Timer Value**

    Select this choice to view or set the POST loader watchdog timer value.

  - **Reboot System on NMI**

    Enable or disable restarting the system whenever a nonmaskable interrupt (NMI) occurs. **Disabled** is the default.

  - **Commands on USB Interface Preference**

    Select this choice to enable or disable the Ethernet over USB interface on IMM.

  - **Network Configuration**

    Select this choice to view the system management network interface port, the IMM MAC address, the current IMM IP address, and host name; define the static IMM IP address, subnet mask, and gateway address; specify whether to use the static IP address or have DHCP assign the IMM IP address; save the network changes; and reset the IMM.

  - **Reset IMM to Defaults**

    Select this choice to view or reset IMM to the default settings.

  - **Reset IMM**

    Select this choice to reset IMM.

– **Legacy Support**

  Select this choice to view or set legacy support.

  - **Force Legacy Video on Boot**

    Select this choice to force INT video support, if the operating system does not support UEFI Video Output Standards.

  - **Rehook INT 19h**

    Select this choice to enable or disable devices from taking control of the boot process. The default is **Disable**.

  - **Legacy Thunk Support**

    Select this choice to enable or disable legacy thunk support.

– **Adapters and UEFI Drivers**

  Select this choice to view information about the adapters and UEFI drivers in the server. You can also select an adapter that you want to configure and start a configuration program.

– **Network**

  Select this choice to see all of the device options, such as the iSCSI, PXE, and Ethernet parameters.

• **Date and Time**

  Select this choice to set the date and time in the server, in 24-hour format (*hour*:*minute*:*second*).

• **Start Options**

Select this choice to view or change the start options, including the startup sequence, keyboard NumLock state, PXE boot option, and PCI device boot priority. Changes in the startup options take effect when you start the server.

The startup sequence specifies the order in which the server checks devices to find a boot record. The server starts from the first boot record that it finds. If the server has Wake on LAN hardware and software and the operating system supports Wake on LAN functions, you can specify a startup sequence for the Wake on LAN functions. For example, you can define a startup sequence that checks for a disc in the CD-RW/DVD drive, then checks the hard disk drive, and then checks a network adapter.

This choice is on the full Setup utility menu only.

- **Boot Manager**

  Select this choice to view, add, or change the device boot priority, boot from a file, select a one-time boot, or reset the boot order to the default setting.

  **Notes:**

  1. To have the server boot from a floppy disk, you must select **Legacy Only** as the first option in the boot sequence.
  2. When the server is unable to boot from a bootable device using the default boot sequence, the server will automatically boot from a connected hypervisor key or from an iSCSI source (if the server is connected to a target iSCSI server) even when the hypervisor key and iSCSI options are not included in the default boot sequence.

- **System Event Logs**

  Select this choice to enter the System Event Manager, where you can view the error messages in the system event logs. You can use the arrow keys to move between pages in the event log.

  The system event logs contain all event and error messages that have been generated during POST, by the systems-management interface handler, and by the system service processor. Run the diagnostic programs to get more information about error codes that occur. See the *Problem Determination and Service Guide* for instructions for running the diagnostic programs.

  **Important:** If the system-error LED on the front of the server is lit but there are no other error indications, clear the system-event log. Also, after you complete a repair or correct an error, clear the system-event log to turn off the system-error LED on the front of the server.

  – **POST Event Viewer**

    Select this choice to view the error messages in the POST event viewer.

  – **System Event Log**

    Select this choice to view the error messages in the system-event log.

  – **Clear System Event Log**

    Select this choice to clear the system-event log.

- **User Security**

  Select this choice to set, change, or clear passwords. See “Passwords” on page 88 for more information.

  This choice is on the full and limited Setup utility menu.

  – **Set Power-on Password**

    Select this choice to set or change a power-on password. For more information, see “Power-on password” on page 88.

  – **Clear Power-on Password**

Select this choice to clear a power-on password. For more information, see “Power-on password.”

  - **Set Admin Password**

    Select this choice to set or change an administrator password. An administrator password is intended to be used by a system administrator; it limits access to the full Setup utility menu. If an administrator password is set, the full Setup utility menu is available only if you type the administrator password at the password prompt. For more information, see “Administrator password” on page 89.

  - **Clear Admin Password**

    Select this choice to clear an administrator password. For more information, see “Administrator password” on page 89.

- **Save Settings**

  Select this choice to save the changes that you have made in the settings.

- **Restore Settings**

  Select this choice to cancel the changes that you have made in the settings and restore the previous settings.

- **Load Default Settings**

  Select this choice to cancel the changes that you have made in the settings and restore the factory settings.

- **Exit Setup**

  Select this choice to exit from the Setup utility. If you have not saved the changes that you have made in the settings, you are asked whether you want to save the changes or exit without saving them.

# Passwords

From the **User Security** menu choice, you can set, change, and delete a power-on password and an administrator password. The **User Security** choice is on the full Setup utility menu only.

If you set only a power-on password, you must type the power-on password to complete the system startup and to have access to the full Setup utility menu.

An administrator password is intended to be used by a system administrator; it limits access to the full Setup utility menu. If you set only an administrator password, you do not have to type a password to complete the system startup, but you must type the administrator password to access the Setup utility menu.

If you set a power-on password for a user and an administrator password for a system administrator, you must type the power-on password to complete the system startup. A system administrator who types the administrator password has access to the full Setup utility menu; the system administrator can give the user authority to set, change, and delete the power-on password. A user who types the power-on password has access to only the limited Setup utility menu; the user can set, change, and delete the power-on password, if the system administrator has given the user that authority.

## Power-on password

If a power-on password is set, when you turn on the server, you must type the power-on password to complete the system startup. You can use any combination of 6 - 20 printable ASCII characters for the password.

When a power-on password is set, you can enable the Unattended Start mode, in which the keyboard and mouse remain locked but the operating system can start. You can unlock the keyboard and mouse by typing the power-on password.

If you forget the power-on password, you can regain access to the server in any of the following ways:

- Clear the password by clearing CMOS memory
- Remove the battery from the server and then reinstall it. See the *Problem Determination and Service Guide* on the IBM *Documentation* CD for instructions for removing the battery.

### Administrator password

An administrator password is intended to be used by a system administrator; it limits access to the full Setup utility menu.

If an administrator password is set, you must type the administrator password for access to the full Setup utility menu. You can use any combination of 6 - 20 printable ASCII characters for the password.

**Attention:** If you set an administrator password and then forget it, there is no way to change, override, or remove it. You must replace the system board.

## Using the Boot Selection Menu program

The Boot Selection Menu is used to temporarily redefine the first startup device without changing boot options or settings in the Setup utility.

To use the Boot Selection Menu program, complete the following steps:

1. Turn off the server.
2. Restart the server.
3. Press F12 (**Select Boot Device**). If a bootable USB mass storage device is installed, a submenu item (**USB Key/Disk**) is displayed.
4. Use the Up Arrow and Down Arrow keys to select an item from the **Boot Selection Menu** and press Enter.

The next time the server starts, it returns to the startup sequence that is set in the Setup utility.

## Starting the backup server firmware

The system board contains a backup copy area for the server firmware. This is a secondary copy of server firmware that you update only during the process of updating server firmware. If the primary copy of the server firmware becomes damaged, use this backup copy.

To force the server to start from the backup copy, turn off the server; then, place the UEFI boot recovery jumper in the backup position (pins 2 and 3).

Use the backup copy of the server firmware until the primary copy is restored. After the primary copy is restored, turn off the server; then, move the UEFI boot recovery jumper back to the primary position (pins 1 and 2).

## Using the ServerGuide Setup and Installation CD

The *ServerGuide Setup and Installation* CD contains a setup and installation program that is designed for your server. The ServerGuide program detects the server model and optional hardware devices that are installed and uses that information during setup to configure the hardware. The ServerGuide program simplifies operating-system installations by providing updated device drivers and, in some cases, installing them automatically.

You can download a free image of the *ServerGuide Setup and Installation* CD or purchase the CD from the ServerGuide fulfillment Web site at http://www.ibm.com/systems/management/serverguide/sub.html. To download the free image, click **IBM Service and Support Site**.

**Note:** Changes are made periodically to the IBM Web site. The actual procedure might vary slightly from what is described in this document.

The ServerGuide program has the following features:

- An easy-to-use interface
- Diskette-free setup, and configuration programs that are based on detected hardware
- ServeRAID Manager program, which configures your ServeRAID adapter or integrated SCSI controller with RAID capabilities
- Device drivers that are provided for the server model and detected hardware
- Operating-system partition size and file-system type that are selectable during setup

## ServerGuide features

Features and functions can vary slightly with different versions of the ServerGuide program. To learn more about the version that you have, start the *ServerGuide Setup and Installation* CD and view the online overview. Not all features are supported on all server models.

The ServerGuide program requires a supported IBM server with an enabled startable (bootable) CD drive. In addition to the *ServerGuide Setup and Installation* CD, you must have your operating-system CD to install the operating system.

The ServerGuide program performs the following tasks:

- Sets system date and time
- Detects the RAID adapter or controller and runs the SAS RAID configuration program (with LSI chip sets for ServeRAID adapters only)
- Checks the microcode (firmware) levels of a ServeRAID adapter and determines whether a later level is available from the CD
- Detects installed optional hardware devices and provides updated device drivers for most adapters and devices
- Provides diskette-free installation for supported Windows operating systems
- Includes an online readme file with links to tips for hardware and operating-system installation

## Setup and configuration overview

When you use the *ServerGuide Setup and Installation* CD, you do not need setup diskettes. You can use the CD to configure any supported IBM server model. The setup program provides a list of tasks that are required to set up your server model.

On a server with a ServeRAID adapter or integrated SCSI controller with RAID capabilities, you can run the SCSI RAID configuration program to create logical drives.

**Note:** Features and functions can vary slightly with different versions of the ServerGuide program.

When you start the *ServerGuide Setup and Installation* CD, the program prompts you to complete the following tasks:

- Select your language.
- Select your keyboard layout and country.
- View the overview to learn about ServerGuide features.
- View the readme file to review installation tips for your operating system and adapter.
- Start the operating-system installation. You will need your operating-system CD.

## Typical operating-system installation

The ServerGuide program can reduce the time it takes to install an operating system. It provides the device drivers that are required for your hardware and for the operating system that you are installing. This section describes a typical ServerGuide operating-system installation.

**Note:** Features and functions can vary slightly with different versions of the ServerGuide program.

1. After you have completed the setup process, the operating-system installation program starts. (You will need your operating-system CD to complete the installation.)
2. The ServerGuide program stores information about the server model, service processor, hard disk drive controllers, and network adapters. Then, the program checks the CD for newer device drivers. This information is stored and then passed to the operating-system installation program.
3. The ServerGuide program presents operating-system partition options that are based on your operating-system selection and the installed hard disk drives.
4. The ServerGuide program prompts you to insert your operating-system CD and restart the server. At this point, the installation program for the operating system takes control to complete the installation.

## Installing your operating system without using ServerGuide

If you have already configured the server hardware and you are not using the ServerGuide program to install your operating system, complete the following steps to download the latest operating-system installation instructions from the IBM Web site.

**Note:** Changes are made periodically to the IBM Web site. The actual procedure might vary slightly from what is described in this document.

1. Go to http://www.ibm.com/systems/support/.
2. Under **Product support**, click **System x**.
3. From the menu on the left side of the page, click **System x support search**.
4. From the **Task** menu, select **Install**.
5. From the **Product family** menu, select **System x3620 M3**.

6. From the **Operating system** menu, select your operating system, and then click **Search** to display the available installation documents.

## Using the integrated management module

The integrated management module (IMM) is a second generation of the functions that were formerly provided by the baseboard management controller hardware. It combines service processor functions, video controller, and (when an optional virtual media key is installed) remote presence function in a single chip.

The IMM supports the following basic systems-management features:

- Environmental monitor with fan speed control for temperature, voltages, fan failure, and power supply failure.
- Light path diagnostics LEDs to report errors that occur with fans, power supplies, microprocessor, hard disk drives, and system errors.
- DIMM error assistance. The Unified Extensible Firmware Interface (UEFI) disables a failing DIMM that is detected during POST, and the IMM lights the associated system-error LED and the failing DIMM error LED.
- System-event log.
- ROM-based IMM firmware flash updates.
- Auto Boot Failure Recovery.
- A virtual media key, which enables full systems-management support (remote video, remote keyboard/mouse, and remote storage).
- When one of the two microprocessors reports an internal error, the server disables the defective microprocessor and restarts with the one good microprocessor.
- NMI detection and reporting.
- Automatic Server Restart (ASR) when POST is not complete or the operating system hangs and the OS watchdog timer times out. The IMM might be configured to watch for the OS watchdog timer and restart the server after a timeout, if the ASR feature is enabled. Otherwise, the IMM allows the administrator to generate an NMI by pressing an NMI button on the rear of the server for an operating-system memory dump. ASR is supported by IPMI.
- Intelligent Platform Management Interface (IPMI) Specification V2.0 and Intelligent Platform Management Bus (IPMB) support.
- Serial redirect.
- Serial over LAN (SOL).
- Active Energy Manager.
- Query power-supply input power.
- PECI 2 support.
- Power/reset control (power-on, hard and soft shutdown, hard and soft reset, schedule power control).
- Alerts (in-band and out-of-band alerting, PET traps - IPMI style, SNMP, e-mail).
- Operating-system failure blue screen capture.
- Command-line interface.
- Configuration save and restore.
- PCI configuration data.
- Boot sequence manipulation.

The IMM also provides the following remote server management capabilities through the OSA SMBridge management utility program:

- **Command-line interface (IPMI Shell)**

  The command-line interface provides direct access to server management functions through the IPMI 2.0 protocol. Use the command-line interface to issue commands to control the server power, view system information, and identify the server. You can also save one or more commands as a text file and run the file as a script.

- **Serial over LAN**

  Establish a Serial over LAN (SOL) connection to manage servers from a remote location. You can remotely view and change the UEFI settings, restart the server, identify the server, and perform other management functions. Any standard Telnet client application can access the SOL connection.

## Using the USB memory key for VMware hypervisor

The VMware hypervisor is available on server models that come with an installed IBM USB Memory Key for VMware Hypervisor. The USB memory key installs in the USB hypervisor connector on the system daughter board. Hypervisor is virtualization software that enables multiple operating systems to run on a host computer at the same time. The USB memory key is required to activate the hypervisor functions.

**Note:** VMware 4.0 U1 does not support JBOD (Just a Bunch of Disks) hard disk drives in a server with ServeRAID M1015 SAS/SATA adapter installed.

To start using the embedded hypervisor functions, you must add the USB memory key to the startup sequence in the Setup utility.

To add the USB hypervisor memory key to the boot order, complete the following steps:

1. Turn on the server.

   **Note:** Approximately 40 seconds after the server is connected to ac power, the power-control button becomes active.
2. When the prompt `<F1> Setup` is displayed, press F1.
3. From the Setup utility main menu, select **Boot Manager**.
4. Select **Add Boot Option**; then, select **Hypervisor**. Press Enter, and then press Esc.
5. Select **Change Boot Order** and then select **Commit Changes**; then, press Enter.
6. Select **Save Settings** and then select **Exit Setup**.

For additional information and instructions, see the *ESXi Embedded and vCenter Server Setup Guide* at http://www.vmware.com/pdf/vsphere4/r40_u1/vsp_40_u1_esxi_e_vc_setup_guide.pdf.

## Using the remote presence capability and blue-screen capture

The remote presence and blue-screen capture features are integrated functions of the integrated management module (IMM). When an optional virtual media key is installed in the server, it activates full systems-management functions. The virtual media key is required to enable the integrated remote presence and blue-screen

capture features. Without the virtual media key, you cannot remotely mount or unmount drives or images on the client system. However, you still can access the Web interface without the key.

After the virtual media key is installed in the server, it is authenticated to determine whether it is valid. If the key is not valid, you receive a message from the Web interface (when you attempt to start the remote presence feature) indicating that the hardware key is required to use the remote presence feature.

The virtual media key has an LED. When this LED is lit and green, it indicates that the key is installed and functioning correctly.

The remote presence feature provides the following functions:

- Remotely viewing video with graphics resolutions up to 1600 x 1200 at 85 Hz, regardless of the system state
- Remotely accessing the server, using the keyboard and mouse from a remote client
- Mapping the CD or DVD drive, diskette drive, and USB flash drive on a remote client, and mapping ISO and diskette image files as virtual drives that are available for use by the server
- Uploading a diskette image to the IMM memory and mapping it to the server as a virtual drive

The blue-screen capture feature captures the video display contents before the IMM restarts the server when the IMM detects an operating-system hang condition. A system administrator can use the blue-screen capture to assist in determining the cause of the hang condition.

## Enabling the remote presence feature

To enable the remote presence feature, complete the following steps:

1. Install the virtual media key into the dedicated slot on the system board (see “Installing an IBM Virtual Media Key” on page 49).
2. Turn on the server.

   **Note:** Approximately 40 seconds after the server is connected to ac power, the power-control button becomes active.

## Obtaining the IP address for the Web interface access

To access the Web interface and use the remote presence feature, you need the IP address for the IMM. You can obtain the IMM IP address through the Setup utility. To locate the IP address, complete the following steps:

1. Turn on the server.

   **Note:** Approximately 40 seconds after the server is connected to ac power, the power-control button becomes active.
2. When the prompt `<F1> Setup` is displayed, press F1. If you have set both a power-on password and an administrator password, you must type the administrator password to access the full Setup utility menu.
3. From the Setup utility main menu, select **System Settings**.
4. On the next screen, select **Integrated Management Module**.
5. On the next screen, select **Network Configuration**.
6. Find the IP address and write it down.

7. Exit from the Setup utility.

## Logging on to the Web interface

To log on to the Web interface to use the remote presence functions, complete the following steps:

1. Open a Web browser on a computer that connects to the server and in the **Address** or **URL** field, type the IP address or host name of the IMM to which you want to connect.

   **Notes:**

   a. If you are logging in to the IMM for the first time after installation, the IMM defaults to DHCP. If a DHCP host is not available, the IMM uses the default static IP address 192.168.70.125.

   b. You can obtain the DHCP-assigned IP address or the static IP address from the server UEFI or from your network administrator.

   The Login page is displayed.

2. Type the user name and password. If you are using the IMM for the first time, you can obtain the user name and password from your system administrator. All login attempts are documented in the event log. A welcome page opens in the browser.

   **Note:** The IMM is set initially with a user name of USERID and password of PASSW0RD (passw0rd with a zero, not the letter O). You have read/write access. For enhanced security, change this default password during the initial configuration.

3. On the Welcome page, type a timeout value (in minutes) in the field that is provided. The IMM will log you off the Web interface if your browser is inactive for the number of minutes that you entered for the timeout value.
4. Click **Continue** to start the session. The browser opens the System Status page, which displays the server status and the server health summary.

## Configuring the Gigabit Ethernet controller

The Ethernet controller is integrated on the system board. It provides an interface for connecting to a 10 Mbps, 100 Mbps, or 1 Gbps network and provides full-duplex (FDX) capability, which enables simultaneous transmission and reception of data on the network. If the Ethernet ports in the server support auto-negotiation, the controller detects the data-transfer rate (10BASE-T, 100BASE-TX, or 1000BASE-T) and duplex mode (full-duplex or half-duplex) of the network and automatically operates at that rate and mode.

You do not have to set any jumpers or configure the controller. However, you must install a device driver to enable the operating system to address the controller.

**Important:** Some cluster solutions require specific code levels or coordinated code updates. If the device is part of a cluster solution, verify that the latest level of code is supported for the cluster solution before you update the code.
To find device drivers and information about configuring the Ethernet controller, complete the following steps:

1. Go to http://www.ibm.com/systems/support/.
2. Under **Product support**, click **System x**.
3. Under **Popular links**, click **Software and device drivers**.
4. From the **Product family** menu, select **System x3620 M3** and click **Go**.

**Notes:**

1. The integrated Ethernet controllers on the system board do not support Intel I/O Acceleration Technology (I/OAT).
2. Changes are made periodically to the IBM Web site. The actual procedure might vary slightly from what is described in this document.

# Enabling and configuring Serial over LAN (SOL)

Establish a Serial over LAN (SOL) connection to manage servers from a remote location. You can remotely view and change the BIOS settings, restart the server, identify the server, and perform other management functions. Any standard Telnet client application can access the SOL connection.

To enable and configure the server for SOL, you must update and configure the UEFI code; update and configure the integrated management module (IMM) firmware; update and configure the Ethernet controller firmware; and enable the operating system for an SOL connection.

## UEFI update and configuration

To update and configure the UEFI code to enable SOL, complete the following steps:

1. Update the UEFI code:
   a. Download the latest version of the UEFI code from http://www.ibm.com/systems/support/.
   b. Update the UEFI code, following the instructions that come with the update file that you downloaded.
2. Update the IMM firmware:
   a. Download the latest version of the IMM firmware from http://www.ibm.com/systems/support/.
   b. Update the IMM firmware, following the instructions that come with the update file that you downloaded.
3. Configure the UEFI settings:
   a. When you are prompted to start the Configuration/Setup Utility program, restart the server and press F1.
   b. Select **System Settings** → **Devices and I/O Ports**.
   c. Select **Console Redirection Settings**; then, make sure that the values are set as follows:
      - **COM Port 1**: Enable
      - **Remote Console**: Enable
      - **Serial Port Sharing**: Enable
      - **Serial Port Access Mode**: Dedicated COM1 Settings
      - **Baud Rate**: 115200
      - **Data Bits**: 8
      - **Parity**: None Stop
      - **Bits**: 1
      - **Thermal Emulation**: ANSI
      - **Active After Boot**: Enable
      - **Flow Control**: Hardware

d. Press Esc twice to exit the **Devices and I/O Ports** section of the Configuration/Setup Utility program.
e. Select **Save Settings**; then, press Enter.
f. Press Enter to confirm.
g. Select **Exit Setup**; then, press Enter.
h. Make sure that Yes, exit the Setup Utility is selected; then, press Enter.

## Using the LSI Logic Configuration Utility program

Use the information in this section to configure an optional LSI RAID controller. If you need to configure an optional ServeRAID controller, see “Configuring a ServeRAID controller” on page 99. You can also select **System Settings** and **Adapters and UEFI Drivers** on the Setup utility to view a list of UEFI device drivers that support configuration; then, select the adapter that you want to configure to start a configuration program (see “Using the Setup utility” on page 84).

Use the LSI Logic Configuration Utility program to configure and manage redundant array of independent disks (RAID) arrays. Be sure to use the program as described in this document. Use the LSI Logic Configuration Utility program to perform the following tasks:

- Perform a low-level format of a hard disk drive
- View or change IDs for attached devices
- Set device scan order
- Set protocol parameters on hard disk drives
- Configure arrays
- View your RAID configuration and associated devices
- Monitor operation of your RAID controllers
- Create a mirrored pair of hard disk drives with or without a hot-spare drive

You can download an LSI command-line configuration program (CFG1030) from http://www.ibm.com/systems/support/. For more information about the RAID controller, go to http://www-304.ibm.com/jct01004c/systems/support/supportsite.wss/docdisplay?lndocid=MIGR-65723&brandind=5000008 or complete the following steps.

**Note:** Changes are made periodically to the IBM Web site. The actual procedure might vary slightly from what is described in this document.

1. Go to http://www.ibm.com/systems/support/.
2. Under **Product support**, click **Hardware upgrades**.
3. Under **Product family**, click **RAID**.
4. Under **Type**, click on the type of RAID controller that is installed in your server.

When you use the LSI Logic Configuration Utility program to configure and manage arrays, review the following information:

- When you create a RAID level-1 (mirrored) pair, all drives must be on the same channel.
- Hard disk drive capacities affect how you create arrays. The drives in an array can have different capacities, but the RAID controller treats them as if they all have the capacity of the smallest hard disk drive.

- You can set up a mirror after the operating system is installed on the primary drive only if you are using an integrated SAS/SATA controller with RAID capabilities. You must make sure that the primary drive has the lower RAID ID (for example, 0).

  **Important:** If you use an integrated SAS/SATA controller with RAID capabilities to configure a RAID level-1 (mirrored) array after you have installed the operating system, you will lose access to any data or applications that were previously stored on the secondary drive of the mirrored pair.
- If you install a different type of RAID controller, follow the instructions in the documentation that comes with the controller to view or change RAID settings for attached devices.

The following sections provide instructions for starting the LSI Logic Configuration Utility program and performing selected functions.

## Starting the LSI Logic Configuration Utility program

To start the LSI Logic Configuration Utility program, complete the following steps:

1. Turn on the server.
2. When the prompt `<<< Press <CTRL><C> to start LSI Logic Configuration Utility >>>` is displayed, press Ctrl+C. If you have set an administrator password, you are prompted to type the password.
3. To select a controller (channel) from the list of adapters, use the arrow keys and press Enter.
4. To change the settings of the selected items, follow the instructions on the screen. If you select **Device Properties** or **Mirroring Properties**, additional screens are displayed.

When you have finished changing settings, press Esc to exit from the program; select **Save** to save the settings that you have changed.

## Formatting a hard disk drive

Low-level formatting removes all data from the hard disk. If there is data on the disk that you want to save, back up the hard disk before you perform this procedure.

**Note:** Before you format a hard disk, make sure that the disk is not part of a mirrored pair. From the list of adapters, select the controller (channel) for the drive that you want to format. Select **Mirroring Properties** and make sure that the mirroring value for the drive is **None**.

To format a drive, complete the following steps:

1. From the list of adapters, select the controller (channel) for the drive that you want to format.
2. Select **Device Properties**.
3. To highlight the drive that you want to format, use the Up Arrow and Down Arrow keys. To scroll left and right, use the Left Arrow and Right Arrow keys or the End key.
4. To start the low-level formatting operation, select **Format** and press Enter .

## Creating a mirrored pair of hard disk drives

To create a mirrored pair of hard disk drives, complete the following steps:

1. From the list of adapters, select the controller (channel) for the drives that you want to mirror.
2. Select **Mirroring Properties**.
3. Use the arrow keys to highlight the first drive in the pair; then, press the Minus key to change the mirroring value to **Primary**.
4. Use the arrow keys to highlight the second drive in the pair; then, press the Minus key to change the mirroring value to **Secondary**.
5. To establish a third drive that will take over the function of either mirrored drive in the event of a failure, use the arrow keys to highlight the drive that you want to use for that purpose; then, press the Minus key to change the mirroring value to **Hot Spare**.

## Configuring a ServeRAID controller

Use the information in this section to configure an optional ServeRAID controller. If you need to configure an optional LSI RAID controller, see “Using the LSI Logic Configuration Utility program” on page 97. You can also select **System Settings** and **Adapters and UEFI Drivers** on the Setup utility to view a list of UEFI device drivers that support configuration; then, select the adapter that you want to configure to start a configuration program (see “Using the Setup utility” on page 84).

**Important:** Some cluster solutions require specific code levels or coordinated code updates. If the device is part of a cluster solution, verify that the latest level of code is supported for the cluster solution before you update the code.

To update the firmware and server firmware for an optional ServeRAID controller, you must use the IBM *ServeRAID Support* CD that comes with the controller.

For more information about the ServeRAID controller, go to http://www-304.ibm.com/jct01004c/systems/support/supportsite.www/docdisplay?lndocid=MIGR-4JTS2T&brandind=5000008 or complete the following steps.

**Note:** Changes are made periodically to the IBM Web site. The actual procedure might vary slightly from what is described in this document.

1. Go to http://www.ibm.com/systems/support/.
2. Under **Product support**, click **Hardware upgrades**.
3. Under **Product family**, click **RAID**.
4. Under **Type**, click on the type of RAID controller that is installed in your server.

## Starting the Intel Matrix Storage Manager option ROM program

The system firmware provides software RAID capabilities that supports RAID levels 0 and 1 on simple-swap models. The following describes the information you must consider when you configure software RAID:

- Software RAID is only supported on servers running Windows Server 2008 R2.
- When you enable software RAID on simple-swap models of the server, you will no longer be able to use the IBM Director, Dynamic System Analysis (DSA), and ServerGuide tools to configure, diagnose, or update hard drives on simple-swap models. However, you will still be able to use these tools to configure or diagnose other simple-swap server model features and components.
- When configuring software RAID, do not install a hard disk drive or create a boot volume that is bigger than 2 TB.

To start the Intel Matrix Storage Manager option ROM program, complete the following steps:

1. Turn on the server.

   **Note:** If you are connecting the server to an ac power source for the first time, do not press the power-control button until the power LED flashes.

2. When the prompt `<F1> Setup` is displayed, press F1. If you have set an administrator password, you are prompted to type the password.
3. Select **System Settings → Devices and IO ports**.
4. In **Configure SATA as**, select **RAID**.

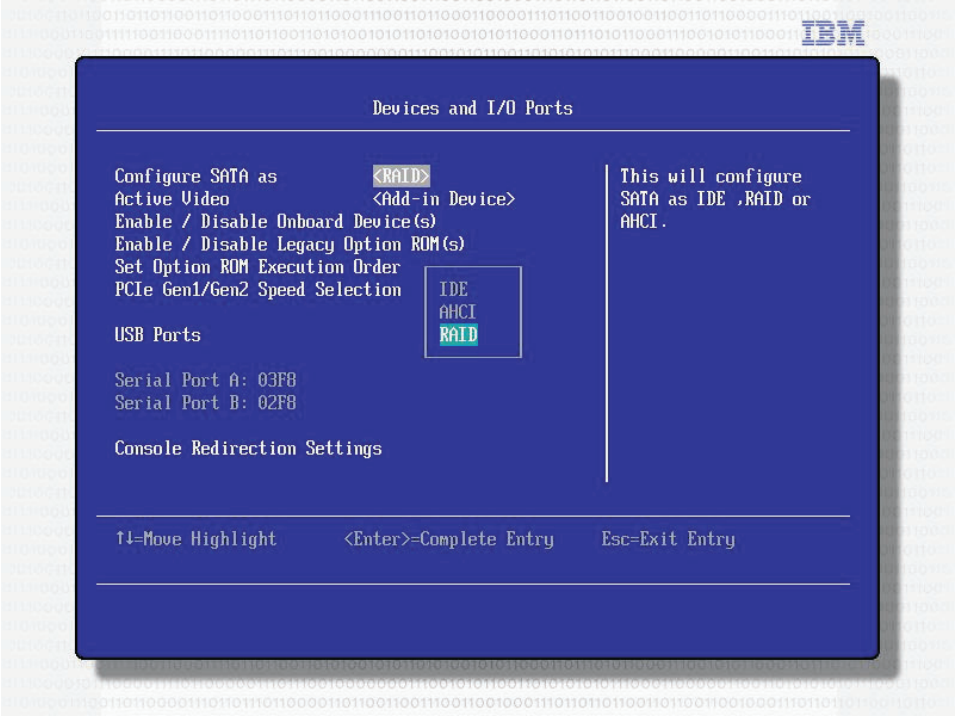


5. Save the changes and exit Setup utility.
6. When the prompt `Press <CTRL>-I to enter Configuration Utility ..` displays, press Ctrl+I.
7. Follow the instructions on the screen to configure RAID.

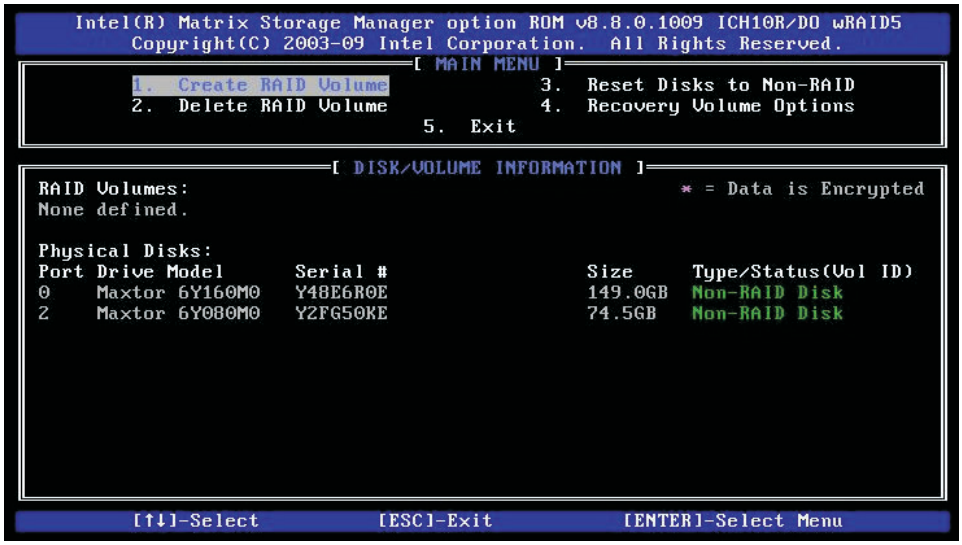


## IBM Advanced Settings Utility program

The IBM Advanced Settings Utility (ASU) program is an alternative to the Setup utility for modifying UEFI settings. Use the ASU program online or out-of-band to modify UEFI settings from the command line without the need to restart the server to access the Setup utility.

You can also use the ASU program to configure the optional remote presence features or other IMM settings. The remote presence features provide enhanced systems-management capabilities.

In addition, the ASU program provides limited settings for configuring the IPMI function in the IMM through the command-line interface.

Use the command-line interface to issue setup commands. You can save any of the settings as a file and run the file as a script. The ASU program supports scripting environments through a batch-processing mode.

For more information and to download the ASU program, go to http://www.ibm.com/systems/support/.

## Updating the firmware

**Important:** Some cluster solutions require specific code levels or coordinated code updates. If the device is part of a cluster solution, verify that the latest level of code is supported for the cluster solution before you update the code.

The firmware for the server is periodically updated and is available for download from the Web. To check for the latest level of firmware, such as server firmware, vital product data (VPD) code, device drivers, and service processor firmware complete the following steps.

**Note:** Changes are made periodically to the IBM Web site. The actual procedure might vary slightly from what is described in this document.

1. Go to http://www.ibm.com/systems/support/.
2. Under **Product support**, click **System x**.

3. Under **Popular links**, click **Software and device drivers**.
4. Click **System x3620 M3** to display the matrix of downloadable files for the server.

Download the latest firmware for the server; then, install the firmware, using the instructions that are included with the downloaded files.

When you replace a device in the server, you might have to either update the firmware that is stored in memory on the device or restore the pre-existing firmware from a diskette or CD image.

- UEFI code is stored in ROM on the system board.
- IMM firmware is stored in ROM on the IMM on the system board.
- Ethernet firmware is stored in ROM on the Ethernet controller.
- ServeRAID firmware is stored in ROM on the ServeRAID adapter.
- SATA firmware is stored in ROM on the integrated SATA controller.
- SAS/SATA firmware is stored in ROM on the SAS/SATA controller on the system board.

The following items are downloadable at http://www.ibm.com/systems/support/:

- Diagnostics programs
- IMM firmware
- Ethernet firmware

**Important::** To avoid problems and to maintain proper system performance, always make sure that the UEFI code, service processor, and other firmware levels are consistent for all System x3620 M3 servers.

## Updating IBM Systems Director

If you plan to use IBM Systems Director to manage the server, you must check for the latest applicable IBM Systems Director updates and interim fixes.

**Note:** Changes are made periodically to the IBM Web site. The actual procedure might vary slightly from what is described in this document.

To locate and install a newer version of IBM Systems Director, complete the following steps:

1. Check for the latest version of IBM Systems Director:
   a. Go to http://www.ibm.com/systems/management/director/downloads.html.
   b. If a newer version of IBM Systems Director than what comes with the server is shown in the drop-down list, follow the instructions on the Web page to download the latest version.
2. Install the IBM Systems Director program.

If your management server is connected to the Internet, to locate and install updates and interim fixes, complete the following steps:

1. Make sure that you have run the Discovery and Inventory collection tasks.
2. On the Welcome page of the IBM Systems Director Web interface, click **View updates**.
3. Click **Check for updates**. The available updates are displayed in a table.

4. Select the updates that you want to install, and click **Install** to start the installation wizard.

If your management server is not connected to the Internet, to locate and install updates and interim fixes, complete the following steps:

1. Make sure that you have run the Discovery and Inventory collection tasks.
2. On a system that is connected to the Internet, go to http://www.ibm.com/eserver/support/fixes/fixcentral/.
3. From the **Product family** list, select **IBM Systems Director**.
4. From the **Product** list, select **IBM Systems Director**.
5. From the **Installed version** list, select the latest version, and click **Continue**.
6. Download the available updates.
7. Copy the downloaded files to the management server.
8. On the management server, on the Welcome page of the IBM Systems Director Web interface, click the **Manage** tab, and click **Update Manager**.
9. Click **Import updates** and specify the location of the downloaded files that you copied to the management server.
10. Return to the Welcome page of the Web interface, and click **View updates**.
11. Select the updates that you want to install, and click **Install** to start the installation wizard.

# Appendix A. Getting help and technical assistance

If you need help, service, or technical assistance or just want more information about IBM products, you will find a wide variety of sources available from IBM to assist you. This section contains information about where to go for additional information about IBM and IBM products, what to do if you experience a problem with your system, and whom to call for service, if it is necessary.

## Before you call

Before you call, make sure that you have taken these steps to try to solve the problem yourself:

- Check all cables to make sure that they are connected.
- Check the power switches to make sure that the system and any optional devices are turned on.
- Use the troubleshooting information in your system documentation, and use the diagnostic tools that come with your system. Information about diagnostic tools is in the *Problem Determination and Service Guide* on the IBM *Documentation* CD that comes with your system.
- Go to the IBM support Web site at http://www.ibm.com/systems/support/ to check for technical information, hints, tips, and new device drivers or to submit a request for information.

You can solve many problems without outside assistance by following the troubleshooting procedures that IBM provides in the online help or in the documentation that is provided with your IBM product. The documentation that comes with IBM systems also describes the diagnostic tests that you can perform. Most systems, operating systems, and programs come with documentation that contains troubleshooting procedures and explanations of error messages and error codes. If you suspect a software problem, see the documentation for the operating system or program.

## Using the documentation

Information about your IBM system and preinstalled software, if any, or optional device is available in the documentation that comes with the product. That documentation can include printed documents, online documents, readme files, and help files. See the troubleshooting information in your system documentation for instructions for using the diagnostic programs. The troubleshooting information or the diagnostic programs might tell you that you need additional or updated device drivers or other software. IBM maintains pages on the World Wide Web where you can get the latest technical information and download device drivers and updates. To access these pages, go to http://www.ibm.com/systems/support/ and follow the instructions. Also, some documents are available through the IBM Publications Center at http://www.ibm.com/shop/publications/order/.

## Getting help and information from the World Wide Web

On the World Wide Web, the IBM Web site has up-to-date information about IBM systems, optional devices, services, and support. The address for IBM System x and xSeries information is http://www.ibm.com/systems/x/. The address for IBM BladeCenter® information is http://www.ibm.com/systems/bladecenter/. The address for IBM IntelliStation® information is http://www.ibm.com/intellistation/.

© Copyright IBM Corp. 2010

You can find service information for IBM systems and optional devices at http://www.ibm.com/systems/support/.

## Software service and support

Through IBM Support Line, you can get telephone assistance, for a fee, with usage, configuration, and software problems with System x and xSeries servers, BladeCenter products, IntelliStation workstations, and appliances. For information about which products are supported by Support Line in your country or region, see http://www.ibm.com/services/sl/products/.

For more information about Support Line and other IBM services, see http://www.ibm.com/services/, or see http://www.ibm.com/planetwide/ for support telephone numbers. In the U.S. and Canada, call 1-800-IBM-SERV (1-800-426-7378).

## Hardware service and support

You can receive hardware service through your IBM reseller or IBM Services. To locate a reseller authorized by IBM to provide warranty service, go to http://www.ibm.com/partnerworld/ and click **Find a Business Partner** on the right side of the page. For IBM support telephone numbers, see http://www.ibm.com/planetwide/. In the U.S. and Canada, call 1-800-IBM-SERV (1-800-426-7378).

In the U.S. and Canada, hardware service and support is available 24 hours a day, 7 days a week. In the U.K., these services are available Monday through Friday, from 9 a.m. to 6 p.m.

## IBM Taiwan product service

台灣 IBM 產品服務聯絡方式：
台灣國際商業機器股份有限公司
台北市松仁路 7 號 3 樓
電話：0800-016-888

IBM Taiwan product service contact information:
IBM Taiwan Corporation
3F, No 7, Song Ren Rd.
Taipei, Taiwan
Telephone: 0800-016-888

# Appendix B. Notices

This information was developed for products and services offered in the U.S.A.

IBM may not offer the products, services, or features discussed in this document in other countries. Consult your local IBM representative for information on the products and services currently available in your area. Any reference to an IBM product, program, or service is not intended to state or imply that only that IBM product, program, or service may be used. Any functionally equivalent product, program, or service that does not infringe any IBM intellectual property right may be used instead. However, it is the user's responsibility to evaluate and verify the operation of any non-IBM product, program, or service.

IBM may have patents or pending patent applications covering subject matter described in this document. The furnishing of this document does not give you any license to these patents. You can send license inquiries, in writing, to:

*IBM Director of Licensing*
*IBM Corporation*
*North Castle Drive*
*Armonk, NY 10504-1785*
*U.S.A.*

INTERNATIONAL BUSINESS MACHINES CORPORATION PROVIDES THIS PUBLICATION “AS IS” WITHOUT WARRANTY OF ANY KIND, EITHER EXPRESS OR IMPLIED, INCLUDING, BUT NOT LIMITED TO, THE IMPLIED WARRANTIES OF NON-INFRINGEMENT, MERCHANTABILITY OR FITNESS FOR A PARTICULAR PURPOSE. Some states do not allow disclaimer of express or implied warranties in certain transactions, therefore, this statement may not apply to you.

This information could include technical inaccuracies or typographical errors. Changes are periodically made to the information herein; these changes will be incorporated in new editions of the publication. IBM may make improvements and/or changes in the product(s) and/or the program(s) described in this publication at any time without notice.

Any references in this information to non-IBM Web sites are provided for convenience only and do not in any manner serve as an endorsement of those Web sites. The materials at those Web sites are not part of the materials for this IBM product, and use of those Web sites is at your own risk.

IBM may use or distribute any of the information you supply in any way it believes appropriate without incurring any obligation to you.

## Trademarks

IBM, the IBM logo, and ibm.com are trademarks or registered trademarks of International Business Machines Corporation in the United States, other countries, or both. If these and other IBM trademarked terms are marked on their first occurrence in this information with a trademark symbol (® or ™), these symbols indicate U.S. registered or common law trademarks owned by IBM at the time this information was published. Such trademarks may also be registered or common law trademarks in other countries. A current list of IBM trademarks is available on the Web at “Copyright and trademark information” at http://www.ibm.com/legal/copytrade.shtml.

© Copyright IBM Corp. 2010

Adobe and PostScript are either registered trademarks or trademarks of Adobe Systems Incorporated in the United States and/or other countries.

Cell Broadband Engine is a trademark of Sony Computer Entertainment, Inc., in the United States, other countries, or both and is used under license therefrom.

Intel, Intel Xeon, Itanium, and Pentium are trademarks or registered trademarks of Intel Corporation or its subsidiaries in the United States and other countries.

Java and all Java-based trademarks are trademarks of Sun Microsystems, Inc., in the United States, other countries, or both.

Linux is a registered trademark of Linus Torvalds in the United States, other countries, or both.

Microsoft, Windows, and Windows NT are trademarks of Microsoft Corporation in the United States, other countries, or both.

UNIX is a registered trademark of The Open Group in the United States and other countries.

Other company, product, or service names may be trademarks or service marks of others.

## Important notes

Processor speed indicates the internal clock speed of the microprocessor; other factors also affect application performance.

CD or DVD drive speed is the variable read rate. Actual speeds vary and are often less than the possible maximum.

When referring to processor storage, real and virtual storage, or channel volume, KB stands for 1024 bytes, MB stands for 1 048 576 bytes, and GB stands for 1 073 741 824 bytes.

When referring to hard disk drive capacity or communications volume, MB stands for 1 000 000 bytes, and GB stands for 1 000 000 000 bytes. Total user-accessible capacity can vary depending on operating environments.

Maximum internal hard disk drive capacities assume the replacement of any standard hard disk drives and population of all hard disk drive bays with the largest currently supported drives that are available from IBM.

Maximum memory might require replacement of the standard memory with an optional memory module.

IBM makes no representation or warranties regarding non-IBM products and services that are ServerProven®, including but not limited to the implied warranties of merchantability and fitness for a particular purpose. These products are offered and warranted solely by third parties.

IBM makes no representations or warranties with respect to non-IBM products. Support (if any) for the non-IBM products is provided by the third party, not IBM.

Some software might differ from its retail version (if available) and might not include user manuals or all program functionality.

## Particulate contamination

**Attention:** Airborne particulates (including metal flakes or particles) and reactive gases acting alone or in combination with other environmental factors such as humidity or temperature might pose a risk to the server that is described in this document. Risks that are posed by the presence of excessive particulate levels or concentrations of harmful gases include damage that might cause the server to malfunction or cease functioning altogether. This specification sets forth limits for particulates and gases that are intended to avoid such damage. The limits must not be viewed or used as definitive limits, because numerous other factors, such as temperature or moisture content of the air, can influence the impact of particulates or environmental corrosives and gaseous contaminant transfer. In the absence of specific limits that are set forth in this document, you must implement practices that maintain particulate and gas levels that are consistent with the protection of human health and safety. If IBM determines that the levels of particulates or gases in your environment have caused damage to the server, IBM may condition provision of repair or replacement of servers or parts on implementation of appropriate remedial measures to mitigate such environmental contamination. Implementation of such remedial measures is a customer responsibility.

*Table 11. Limits for particulates and gases*

| Contaminant | Limits |
|---|---|
| Particulate | • The room air must be continuously filtered with 40% atmospheric dust spot efficiency (MERV 9) according to ASHRAE Standard 52.2[1].<br>• Air that enters a data center must be filtered to 99.97% efficiency or greater, using high-efficiency particulate air (HEPA) filters that meet MIL-STD-282.<br>• The deliquescent relative humidity of the particulate contamination must be more than 60%[2].<br>• The room must be free of conductive contamination such as zinc whiskers. |
| Gaseous | • Copper: Class G1 as per ANSI/ISA 71.04-1985[3]<br>• Silver: Corrosion rate of less than 300 Å in 30 days |

[1] ASHRAE 52.2-2008 - *Method of Testing General Ventilation Air-Cleaning Devices for Removal Efficiency by Particle Size*. Atlanta: American Society of Heating, Refrigerating and Air-Conditioning Engineers, Inc.

[2] The deliquescent relative humidity of particulate contamination is the relative humidity at which the dust absorbs enough water to become wet and promote ionic conduction.

[3] ANSI/ISA-71.04-1985. *Environmental conditions for process measurement and control systems: Airborne contaminants*. Instrument Society of America, Research Triangle Park, North Carolina, U.S.A.

## Product recycling and disposal

This unit must be recycled or discarded according to applicable local and national regulations. IBM encourages owners of information technology (IT) equipment to responsibly recycle their equipment when it is no longer needed. IBM offers a variety of product return programs and services in several countries to assist equipment owners in recycling their IT products. Information on IBM product

recycling offerings can be found on IBM's Internet sites at http://www.ibm.com/ibm/recycle/us/index.shtml and http://www.ibm.com/ibm/environment/products/index.shtml.

Esta unidad debe reciclarse o desecharse de acuerdo con lo establecido en la normativa nacional o local aplicable. IBM recomienda a los propietarios de equipos de tecnología de la información (TI) que reciclen responsablemente sus equipos cuando éstos ya no les sean útiles. IBM dispone de una serie de programas y servicios de devolución de productos en varios países, a fin de ayudar a los propietarios de equipos a reciclar sus productos de TI. Se puede encontrar información sobre las ofertas de reciclado de productos de IBM en el sitio web de IBM http://www.ibm.com/ibm/recycle/us/index.shtml y http://www.ibm.com/ibm/environment/products/index.shtml.

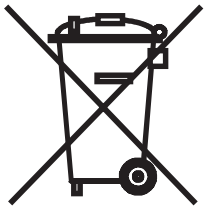

**Notice:** This mark applies only to countries within the European Union (EU) and Norway.

This appliance is labeled in accordance with European Directive 2002/96/EC concerning waste electrical and electronic equipment (WEEE). The Directive determines the framework for the return and recycling of used appliances as applicable throughout the European Union. This label is applied to various products to indicate that the product is not to be thrown away, but rather reclaimed upon end of life per this Directive.

注意: このマークは EU 諸国およびノルウェーにおいてのみ適用されます。

この機器には、EU 諸国に対する廃電気電子機器指令 2002/96/EC(WEEE) のラベルが貼られています。この指令は、EU 諸国に適用する使用済み機器の回収とリサイクルの骨子を定めています。このラベルは、使用済みになった時に指令に従って適正な処理をする必要があることを知らせるために種々の製品に貼られています。

**Remarque :** Cette marque s'applique uniquement aux pays de l'Union Européenne et à la Norvège.

L'etiquette du système respecte la Directive européenne 2002/96/EC en matière de Déchets des Equipements Electriques et Electroniques (DEEE), qui détermine les dispositions de retour et de recyclage applicables aux systèmes utilisés à travers l'Union européenne. Conformément à la directive, ladite étiquette précise que le produit sur lequel elle est apposée ne doit pas être jeté mais être récupéré en fin de vie.

In accordance with the European WEEE Directive, electrical and electronic equipment (EEE) is to be collected separately and to be reused, recycled, or recovered at end of life. Users of EEE with the WEEE marking per Annex IV of the WEEE Directive, as shown above, must not dispose of end of life EEE as unsorted municipal waste, but use the collection framework available to customers for the return, recycling, and recovery of WEEE. Customer participation is important to minimize any potential effects of EEE on the environment and human health due to

the potential presence of hazardous substances in EEE. For proper collection and treatment, contact your local IBM representative.

## Battery return program

This product may contain a sealed lead acid, nickel cadmium, nickel metal hydride, lithium, or lithium ion battery. Consult your user manual or service manual for specific battery information. The battery must be recycled or disposed of properly. Recycling facilities may not be available in your area. For information on disposal of batteries outside the United States, go to http://www.ibm.com/ibm/environment/products/index.shtml or contact your local waste disposal facility.

In the United States, IBM has established a return process for reuse, recycling, or proper disposal of used IBM sealed lead acid, nickel cadmium, nickel metal hydride, and battery packs from IBM equipment. For information on proper disposal of these batteries, contact IBM at 1-800-426-4333. Have the IBM part number listed on the battery available prior to your call.

**For Taiwan:** Please recycle batteries.

**For the European Union:**

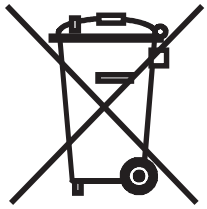

**Notice:** This mark applies only to countries within the European Union (EU).

Batteries or packaging for batteries are labeled in accordance with European Directive 2006/66/EC concerning batteries and accumulators and waste batteries and accumulators. The Directive determines the framework for the return and recycling of used batteries and accumulators as applicable throughout the European Union. This label is applied to various batteries to indicate that the battery is not to be thrown away, but rather reclaimed upon end of life per this Directive.

Les batteries ou emballages pour batteries sont étiquetés conformément aux directives européennes 2006/66/EC, norme relative aux batteries et accumulateurs en usage et aux batteries et accumulateurs usés. Les directives déterminent la marche à suivre en vigueur dans l'Union Européenne pour le retour et le recyclage des batteries et accumulateurs usés. Cette étiquette est appliquée sur diverses batteries pour indiquer que la batterie ne doit pas être mise au rebut mais plutôt récupérée en fin de cycle de vie selon cette norme.

バッテリーあるいはバッテリー用のパッケージには、EU 諸国に対する廃電気電子機器指令 2006/66/EC のラベルが貼られています。この指令は、バッテリーと蓄電池、および廃棄バッテリーと蓄電池に関するものです。この指令は、使用済みバッテリーと蓄電池の回収とリサイクルの骨子を定めているもので、EU 諸国にわたって適用されます。このラベルは、使用済みになったときに指令に従って適正な処理をする必要があることを知らせるために種々のバッテリーに貼られています。

In accordance with the European Directive 2006/66/EC, batteries and accumulators are labeled to indicate that they are to be collected separately and recycled at end of life. The label on the battery may also include a chemical symbol for the metal concerned in the battery (Pb for lead, Hg for mercury, and Cd for cadmium). Users of batteries and accumulators must not dispose of batteries and accumulators as unsorted municipal waste, but use the collection framework available to customers for the return, recycling, and treatment of batteries and accumulators. Customer participation is important to minimize any potential effects of batteries and accumulators on the environment and human health due to the potential presence of hazardous substances. For proper collection and treatment, contact your local IBM representative.

This notice is provided in accordance with Royal Decree 106/2008 of Spain: The retail price of batteries, accumulators, and power cells includes the cost of the environmental management of their waste.

**For California:**

Perchlorate material – special handling may apply. See http://www.dtsc.ca.gov/hazardouswaste/perchlorate/.

The foregoing notice is provided in accordance with California Code of Regulations Title 22, Division 4.5 Chapter 33. Best Management Practices for Perchlorate Materials. This product/part may include a lithium manganese dioxide battery which contains a perchlorate substance.

## Documentation format

The publications for this product are in Adobe Portable Document Format (PDF) and should be compliant with accessibility standards. If you experience difficulties when you use the PDF files and want to request a Web-based format or accessible PDF document for a publication, direct your mail to the following address:

*Information Development*
*IBM Corporation*
*205/A015*
*3039 E. Cornwallis Road*
*P.O. Box 12195*
*Research Triangle Park, North Carolina 27709-2195*
*U.S.A.*

In the request, be sure to include the publication part number and title.

When you send information to IBM, you grant IBM a nonexclusive right to use or distribute the information in any way it believes appropriate without incurring any obligation to you.

## Electronic emission notices

### Federal Communications Commission (FCC) statement

**Note:** This equipment has been tested and found to comply with the limits for a Class A digital device, pursuant to Part 15 of the FCC Rules. These limits are designed to provide reasonable protection against harmful interference when the equipment is operated in a commercial environment. This equipment generates, uses, and can radiate radio frequency energy and, if not installed and used in accordance with the instruction manual, may cause harmful interference to radio communications. Operation of this equipment in a residential area is likely to cause harmful interference, in which case the user will be required to correct the interference at his own expense.

Properly shielded and grounded cables and connectors must be used in order to meet FCC emission limits. IBM is not responsible for any radio or television interference caused by using other than recommended cables and connectors or by unauthorized changes or modifications to this equipment. Unauthorized changes or modifications could void the user's authority to operate the equipment.

This device complies with Part 15 of the FCC Rules. Operation is subject to the following two conditions: (1) this device may not cause harmful interference, and (2) this device must accept any interference received, including interference that may cause undesired operation.

### Industry Canada Class A emission compliance statement

This Class A digital apparatus complies with Canadian ICES-003.

### Avis de conformité à la réglementation d'Industrie Canada

Cet appareil numérique de la classe A est conforme à la norme NMB-003 du Canada.

### Australia and New Zealand Class A statement

**Attention:** This is a Class A product. In a domestic environment this product may cause radio interference in which case the user may be required to take adequate measures.

### United Kingdom telecommunications safety requirement

**Notice to Customers**

This apparatus is approved under approval number NS/G/1234/J/100003 for indirect connection to public telecommunication systems in the United Kingdom.

### European Union EMC Directive conformance statement

This product is in conformity with the protection requirements of EU Council Directive 2004/108/EC on the approximation of the laws of the Member States relating to electromagnetic compatibility. IBM cannot accept responsibility for any failure to satisfy the protection requirements resulting from a nonrecommended modification of the product, including the fitting of non-IBM option cards.

**Attention:** This is an EN 55022 Class A product. In a domestic environment this product may cause radio interference in which case the user may be required to take adequate measures.

Responsible manufacturer:
International Business Machines Corp.
New Orchard Road
Armonk, New York 10504
914-499-1900

European Community contact:
IBM Technical Regulations, Department M456
IBM-Allee 1, 71137 Ehningen, Germany
Telephone: 0049 (0) 7032 15-2937
E-mail: tjahn@de.ibm.com

## Germany Class A statement

**Deutschsprachiger EU Hinweis:**

**Hinweis für Geräte der Klasse A EU-Richtlinie zur Elektromagnetischen Verträglichkeit**

Dieses Produkt entspricht den Schutzanforderungen der EU-Richtlinie 2004/108/EG zur Angleichung der Rechtsvorschriften über die elektromagnetische Verträglichkeit in den EU-Mitgliedsstaaten und hält die Grenzwerte der EN 55022 Klasse A ein.

Um dieses sicherzustellen, sind die Geräte wie in den Handbüchern beschrieben zu installieren und zu betreiben. Des Weiteren dürfen auch nur von der IBM empfohlene Kabel angeschlossen werden. IBM übernimmt keine Verantwortung für die Einhaltung der Schutzanforderungen, wenn das Produkt ohne Zustimmung der IBM verändert bzw. wenn Erweiterungskomponenten von Fremdherstellern ohne Empfehlung der IBM gesteckt/eingebaut werden.

EN 55022 Klasse A Geräte müssen mit folgendem Warnhinweis versehen werden: "Warnung: Dieses ist eine Einrichtung der Klasse A. Diese Einrichtung kann im Wohnbereich Funk-Störungen verursachen; in diesem Fall kann vom Betreiber verlangt werden, angemessene Maßnahmen zu ergreifen und dafür aufzukommen."

### Deutschland: Einhaltung des Gesetzes über die elektromagnetische Verträglichkeit von Geräten

Dieses Produkt entspricht dem "Gesetz über die elektromagnetische Verträglichkeit von Geräten (EMVG)". Dies ist die Umsetzung der EU-Richtlinie 2004/108/EG in der Bundesrepublik Deutschland.

### Zulassungsbescheinigung laut dem Deutschen Gesetz über die elektromagnetische Verträglichkeit von Geräten (EMVG) (bzw. der EMC EG Richtlinie 2004/108/EG) für Geräte der Klasse A

Dieses Gerät ist berechtigt, in Übereinstimmung mit dem Deutschen EMVG das EG-Konformitätszeichen - CE - zu führen.

Verantwortlich für die Einhaltung der EMV Vorschriften ist der Hersteller:
International Business Machines Corp.
New Orchard Road
Armonk, New York 10504
914-499-1900

Der verantwortliche Ansprechpartner des Herstellers in der EU ist:
IBM Deutschland
Technical Regulations, Department M456
IBM-Allee 1, 71137 Ehningen, Germany

Telephone: 0049 (0) 7032 15-2937
E-mail: tjahn@de.ibm.com

**Generelle Informationen:**

**Das Gerät erfüllt die Schutzanforderungen nach EN 55024 und EN 55022 Klasse A.**

## Japan VCCI Class A statement

この装置は、クラス A 情報技術装置です。この装置を家庭環境で使用すると電波妨害を引き起こすことがあります。この場合には使用者が適切な対策を講ずるよう要求されることがあります。 VCCI-A

This is a Class A product based on the standard of the Voluntary Control Council for Interference (VCCI). If this equipment is used in a domestic environment, radio interference may occur, in which case the user may be required to take corrective actions.

## Japan Electronics and Information Technology Industries Association (JEITA) statement

高調波ガイドライン適合品

Japanese Electronics and Information Technology Industries Association (JEITA) Confirmed Harmonics Guideline (products less than or equal to 20 A per phase)

## Korea Communications Commission (KCC) statement

이기기는 업무용으로 전자파 적합등록을 받은 기기이오니, 판매자 또는 사용자는 이점을 주의하시기 바라며, 만약 잘못 구입하셨을 때에는 구입한 곳에서 비업무용으로 교환하시기 바랍니다.

Please note that this equipment has obtained EMC registration for commercial use. In the event that it has been mistakenly sold or purchased, please exchange it for equipment certified for home use.

## Russia Electromagnetic Interference (EMI) Class A statement

ВНИМАНИЕ! Настоящее изделие относится к классу А.
В жилых помещениях оно может создавать радиопомехи, для снижения которых необходимы дополнительные меры

## People's Republic of China Class A electronic emission statement

声　　明

此为 A 级产品。在生活环境中，
该产品可能会造成无线电干扰。
在这种情况下，可能需要用户对其
干扰采取切实可行的措施。

## Taiwan Class A compliance statement

警告使用者:
這是甲類的資訊產品，在
居住的環境中使用時，可
能會造成射頻干擾，在這
種情況下，使用者會被要
求採取某些適當的對策。

# Index

## A


ac power LED 16
accessible documentation 112
acoustical noise emissions 8
Active Energy Manager 9
Active Memory 10
adapter
  installing 40
  PCI bus, identification 40
  requirements 40
  ServeRAID SAS
    installing 42
  slot types 40
administrator password 88
Advanced Settings Utility (ASU) program, overview 101
air baffle
  installing 79
  removing 38
assistance, getting 105
attention notices 6


## B


battery
  connector 20
  installing remote 44
battery return program 111
blue-screen capture feature, overview 94
boot selection menu program, using 89
button, presence detection 14


## C


cable connectors 20
cabling
  external routing 81
  internal routing 31
  system-board external connectors 22
  system-board internal connectors 20
caution statements 6
Class A electronic emission notice 113
components, server 19
configuration
  updating server 82, 83
  with ServerGuide 90
configuration programs
  IBM Advanced Settings Utility (ASU) program 84
  LSI Configuration Utility 84
configuring
  Ethernet controller 95
connectors
  battery 20
  cable 20
  DIMM 21
  DIMMs 20
  DVD drive cable 31
connectors *(continued)*
  external cable routing 81
  external port 22
  fans 27
  front 81
  hot-swap backplane 34
  internal 20
  internal cable routing 31
  memory 20
  microprocessor 20
  PCI 20
  PCI riser-card adapter 27
  port 22
  rear 81
  SATA tape drive cable 33
  simple-swap backplate 35
  system board 20
  USB tape drive cable 32
contamination, particulate and gaseous 7, 109
controls and LEDs
  front view 13
  rear view 15
cooling 8
cover
  installing 80
  removing 37


## D


danger statements 6
device drivers 13
diagnostics program, DSA preboot 9
dimension 8
DIMM connectors 21
DIMM installation sequence
  for memory mirroring 64
DIMMs
  installing 65
  order of installation 63
  types supported 60
documentation CD 3
documentation format 112
documentation, related 4
drive, hot-swap
  installing 51
  removing 52
drive, installing simple-swap 53
drive, installing tape 59
DVD drive
  installing 56
DVD drive activity LED 14
DVD drive cage option, installing 54
DVD-eject button 14
Dynamic System Analysis (DSA) Preboot diagnostics program 9


© Copyright IBM Corp. 2010

# E


electrical input 8
electronic emission Class A notice 113
electrostatic-discharge wrist strap, using 30
embedded hypervisor, using 93
enclosure manager heartbeat LED 25
environment 7
Ethernet
  systems-management connector 15
Ethernet activity LED 16
Ethernet connector 15
Ethernet controller, configuring 95
Ethernet-link LED 16
external cable routing 81


# F


fan 8
Fan board
  connectors 27
FCC Class A notice 113
features 6
  and specifications 6
  IMM 92
  RAS 11
  remote presence 93
  ServerGuide 90
filler panel
  hard-disk drive bay 51, 53
firmware
  updating 101
firmware updates 2, 89
firmware, UEFI-compliant 8


# G


gaseous contamination 7, 109
getting help 105
grease, thermal 74


# H


hard disk drive
  installing 51, 52
  removing 52, 53
hardware RAID 7
hardware service and support 106
heat output 8
help, getting 105
hot-swap
  drive
    installing 51
    removing 52
  installing power supply 75
humidity 7
hypervisor memory key
  installing 77
  using 93


# I


IBM Advanced Settings Utility program, overview 101
IBM Director
  *See* IBM Systems Director
IBM Support Line 106
IBM Systems Director
  overview 12
  server feature 9
  updating 102
IBM Virtual Media Key, installing 49
IBM X-Architecture technology 10
IMM
  overview 8
  using 92
IMM heartbeat LED 25
important notices 6
installation guidelines 28
installing
  adapter 40
  air baffle 79
  DIMM 65
  DVD drive 56
  DVD drive cage option 54
  hard disk drive 51
  IBM Virtual Media Key 49
  memory module 65
  microprocessor 71
  Optical drive cage option 54
  PCI adapter 40
  power supply 75
  RAID controller 42
  SAS controller 42
  ServeRAID adapter advanced feature key 48
  simple-swap drive 53
  simple-swap hard disk drive 52
  simple-swap hard disk drive backplate 67
  tape drive 59
  Tape drive cage option 57
  USB hypervisor memory key 77
installing cover 80
integrated management module, about 8
Intel Matrix Storage Manager option ROM
  starting 99
internal cable routing 31
  DVD drive cable 31
  hot-swap backplane 34
  SATA tape drive cable 33
  simple-swap backplate 35
  USB tape drive cable 32
IP address, obtaining for Web interface 94


# J


jumper
  system board location 23
jumpers on the system board 23
jumpers, description 23

## L

LED
  power-on 13
  system locator 14
  system-error 14
LEDs
  ac power 16
  enclosure manager heartbeat 25
  Ethernet activity 16
  Ethernet link 16
  IMM heartbeat 25
  power-supply 16
  power-supply detected problems 16
  system board 25
  system pulse 25
LEDs and controls
  front view 13
  rear view 15
light path diagnostics button 25

## M

management module, integrated 8
management, systems 8
memory 10
  two-DIMM-per-channel (2DPC) 61
memory mirroring
  description 63
  DIMM population sequence 64
memory module
  installing 65
  specifications 7
memory online-spare
  description 64
menu choices in Setup utility 85
microprocessor
  heat sink 73
  installing 71
  specifications 7
mirroring mode 63

## N

NMI button 15
notes 6
notes, important 108
notices 107
  electronic emission 113
  FCC, Class A 113
notices and statements 6

## O

obtaining IP address for Web interface 94
online documentation 2, 5
online-spare mode 64
operating system installation
  with ServerGuide 91
  without ServerGuide 91
operator information panel 13
Optical drive cage option, installing 54

## P

particulate contamination 7, 109
password
  administrator 89
  power-on 88
PCI
  expansion slots 7
PCI adapter
  installing 40
PCI riser-card assembly
  installing 78
  removing 39
port connectors 22
power
  power-control button 13
power supply
  installing 75
  operating requirements 75
  specifications 8
power-cord connector 15
power-on LED 13
power-on password 87
power-supply LEDs 16
power-supply LEDs and detected problems 16
presence detection button 14
product recycling and disposal 110
publications 4

## R

RAID 7, 11
  hardware 7
  software 7, 11
RAID array
  creating
    Intel Matrix Storage Manager 99
RAID controller
  installing 42
RAS features 11
recycling and disposal, product 110
remote battery, installing 44
remote presence feature
  enabling 94
  functions 8
  using 93
removing
  air baffle 38
  cover 37
  hard disk drive 52, 53
replacing
  simple-swap hard disk drive 52
  simple-swap hard disk drive backplate 67
riser-card assembly
  installing 78
  removing 39

# S


SAS connector, internal 20
SAS controller
  installing 42
SAS controller battery, installing remote 44
serial connector 15
Serial over LAN (SOL)
  configuring 96
  enabling 96
server configuration, updating 82, 83
server firmware, starting backup 89
server firmware, UEFI-compliant 8
server power and IMM 17
ServeRAID adapter advanced feature key
  installing 48
ServeRAID support 11
ServerGuide
  downloading CD 10
  features 90
  using 90
  using to install operating system 91
setup and configuration with ServerGuide 90
Setup utility
  menu choices 85
  starting 84
  using 84
simple-swap
  hard disk drive 53
simple-swap hard disk drive backplate
  installing 67
size 8
software RAID 7, 11, 99
  limitation 99
software service and support 106
specifications 6
starting
  backup server firmware 89
  Setup utility 84
statements and notices 6
static-sensitive devices, handling 30
support, web site 105
system
  error LED front 14
  locator LED, front 14
system board
  connectors 20
    DIMM 21
    external port 22
    internal 20
  jumper 23
  LEDs 25
system board jumpers 23
system pulse LEDs 25
system reliability guidelines 29
Systems Director, updating 102
systems management 8, 11, 12


# T


Tape drive cage option, installing 57
tape drive, installing 59
telephone numbers 106
temperature 7
thermal grease 74
trademarks 107
turning off the server 18
turning on the server 17
two-DIMM-per-channel (2DPC)
  requirements 61


# U


United States electronic emission Class A notice 113
United States FCC Class A notice 113
UpdateXpress 13
updating
  firmware 101
  IBM Systems Director 102
  server configuration 82, 83
USB connector 13, 15
USB hypervisor memory key
  installing 77
  using 93
using
  boot selection menu program 89
  embedded hypervisor 93
  remote presence feature 93
  ServerGuide 90
  Setup utility 84


# V


video connector
  rear 15
virtual media key, installing 49


# W


Web interface
  logging on to 95
  obtaining IP address 94
web site
  publication ordering 105
  ServerGuide 90
  support 105
  support line, telephone numbers 106
weight 8

Part Number: 81Y5783

Printed in USA

(1P) P/N: 81Y5783