ThinkPad

ThinkPad T420 and T420i
Hardware Maintenance Manual

Note: Before using this information and the product it supports, be sure to read the general information under Appendix A “Notices” on page 179.

First Edition (February 2011)

© Copyright Lenovo 2011.

LENOVO products, data, computer software, and services have been developed exclusively at private expense and are sold to governmental entities as commercial items as defined by 48 C.F.R. 2.101 with limited and restricted rights to use, reproduction and disclosure.

LIMITED AND RESTRICTED RIGHTS NOTICE: If products, data, computer software, or services are delivered pursuant a General Services Administration “GSA” contract, use, reproduction, or disclosure is subject to restrictions set forth in Contract No. GS-35F-05925.

Contents

About this manual iii

Chapter 1. Safety information 1

General safety 1
Electrical safety 2
Safety inspection guide 3
Handling devices that are sensitive to electrostatic discharge 4
Grounding requirements 4
Safety notices (multilingual translations) 5
Laser compliance statement (multilingual translations) 17

Chapter 2. Important service information 23

Strategy for replacing FRUs 23
- Strategy for replacing a hard disk drive . . . 24
- Important notice for replacing a system board 24
- How to use error message 24

Strategy for replacing FRUs for CTO, CMV, and GAV 25
- Product definition 25
- FRU identification for CTO, CMV, and GAV products 25

Chapter 3. General checkout 27

What to do first 28
Checkout guide 29
- Diagnostics using PC-Doctor for DOS 29
- Lenovo ThinkVantage Toolbox 31
- FRU tests 33

Power system checkout 35
- Checking the ac power adapter 35
- Checking operational charging 35
- Checking the battery pack 36
- Checking the backup battery 36

Chapter 4. Related service information 39

Restoring the factory contents by using Recovery Disc Set 39
Passwords 40
- Power-on password 40
- Hard-disk password 40
- Supervisor password 41
- How to remove the power-on password . . . 41
- How to remove the hard-disk password . . . 41

Power management 43
- Screen blank mode 43
- Sleep (standby) mode 43
- Hibernation mode 44

Symptom-to-FRU index 45
- Numeric error codes 45
- Error messages 47
- Beep symptoms 48
- No-beep symptoms 48
- LCD-related symptoms 49
- Intermittent problems 50
- Undetermined problems 50

Chapter 5. Status indicators 51

Chapter 6. Fn key combinations 55

Chapter 7. FRU replacement notices 59

Screw notices 59
Retaining serial numbers 60
- Restoring the serial number of the system unit 60
- Retaining the UUID 60
- Reading or writing the ECA information . . . 61

Chapter 8. Removing and replacing a FRU 63

Before servicing ThinkPad T420 and T420i . . . 64
1010 Battery pack 65
1020 ExpressCard blank bezel 66
1030 Serial Ultrabay Enhanced device or travel bezel 67
1040 Hard disk drive (HDD) and solid state drive (SSD) 68
1050 DIMM slot cover 71
1060 DIMM (in the slot on the underside of the computer) 72
1070 PCI Express Mini Card for wireless WAN . . 73
1080 Keyboard 75
1090 DIMM (in the slot under the keyboard) . . . 80
1100 Backup battery 82
1110 PCI Express Mini Card for wireless LAN . . 84
1120 Keyboard bezel assembly, FPC cable, and *Bluethooth* daughter card (BDC-2.1) 86
1130 SmartCard or Contactless SmartCard . . . 91
1140 Modem daughter card (MDC) 93
1150 Speaker assembly 94

© Copyright Lenovo 2011

1160 LCD unit 96
1170 Fan assembly 101
1180 CPU 106
1190 Base cover assembly and DC-in connector cable 107
1200 Magnesium structure frame 112
1210 System board and ExpressCard slot assembly 114
2010 LCD bezel assembly 117
2020 LED board 118
2030 Integrated camera 120
2040 LCD panel and LCD cable 122
2050 Camera cable 124
2060 Wireless LAN antenna assembly or wireless LAN/WAN antenna assembly 125
2070 Hinges and LCD rear cover assembly . . . 127

Chapter 9. Locations 129
Front view 129
Rear view 131
Bottom view 132

Chapter 10. Parts list 133
Overall 134
LCD FRUs 154
Keyboard 166
Miscellaneous parts 167
Information about ac power adapters 170
Power cords 171
Recovery discs 172
Windows 7 Professional (32 bit) DVDs 173
Windows 7 Professional (64 bit) DVDs 174
Windows 7 Home Basic (32 bit) DVDs 175
Windows 7 Home Premium (32 bit) DVDs . . 176
Windows 7 Home Premium (64 bit) DVDs . . 177
Common service tools 178

Appendix A. Notices 179
Trademarks 180

About this manual

This manual contains service and reference information for the following ThinkPad® products.

ThinkPad T420 and T420i	Machine Type 4177, 4178, 4179, 4180, 4236, 4237, and 4238

Use this manual along with the advanced diagnostic tests to troubleshoot problems.

Important:

This manual is intended only for trained service technicians who are familiar with ThinkPad products. Use this manual along with the advanced diagnostic tests to troubleshoot problems effectively.
Before servicing a ThinkPad product, be sure to read all the information under Chapter 1 “Safety information” on page 1 and Chapter 2 “Important service information” on page 23.

© Copyright Lenovo 2011

Chapter 1. Safety information

This chapter presents following safety information that you need to be familiar with before you service a ThinkPad Notebook.

- “General safety” on page 1
- “Electrical safety” on page 2
- “Safety inspection guide” on page 3
- “Handling devices that are sensitive to electrostatic discharge” on page 4
- “Grounding requirements” on page 4
- “Safety notices (multilingual translations)” on page 5
- “Laser compliance statement (multilingual translations)” on page 17

General safety

Follow these rules to ensure general safety:

- Observe good housekeeping in the area of the machines during and after maintenance.
- When lifting any heavy object:
  1. Make sure that you can stand safely without slipping.
  2. Distribute the weight of the object equally between your feet.
  3. Use a slow lifting force. Never move suddenly or twist when you attempt to lift.
  4. Lift by standing or by pushing up with your leg muscles; this action removes the strain from the muscles in your back. *Do not attempt to lift any object that weighs more than 16 kg (35 lb) or that you think is too heavy for you.*
- Do not perform any action that causes hazards to the customer, or that makes the equipment unsafe.
- Before you start the machine, make sure that other service technicians and the customer's personnel are not in a hazardous position.
- Place removed covers and other parts in a safe place, away from all personnel, while you are servicing the machine.
- Keep your toolcase away from walk areas so that other people will not trip over it.
- Do not wear loose clothing that can be trapped in the moving parts of a machine. Make sure that your sleeves are fastened or rolled up above your elbows. If your hair is long, fasten it.
- Insert the ends of your necktie or scarf inside clothing or fasten it with a nonconductive clip, about 8 centimeters (3 inches) from the end.
- Do not wear jewelry, chains, metal-frame eyeglasses, or metal fasteners for your clothing.

  Attention: Metal objects are good electrical conductors.
- Wear safety glasses when you are hammering, drilling, soldering, cutting wire, attaching springs, using solvents, or working in any other conditions that might be hazardous to your eyes.
- After service, reinstall all safety shields, guards, labels, and ground wires. Replace any safety device that is worn or defective.
- Reinstall all covers correctly before returning the machine to the customer.
- Fan louvers on the machine help to prevent overheating of internal components. Do not obstruct fan louvers or cover them with labels or stickers.

© Copyright Lenovo 2011

Electrical safety

Observe the following rules when working on electrical equipment.

Important:

Use only approved tools and test equipment. Some hand tools have handles covered with a soft material that does not insulate you when working with live electrical currents.
Many customers have, near their equipment, rubber floor mats that contain small conductive fibers to decrease electrostatic discharges. Do not use this type of mat to protect yourself from electrical shock.

- Find the room emergency power-off (EPO) switch, disconnecting switch, or electrical outlet. If an electrical accident occurs, you can then operate the switch or unplug the power cord quickly.
- Do not work alone under hazardous conditions or near equipment that has hazardous voltages.
- Disconnect all power before:
  - Performing a mechanical inspection
  - Working near power supplies
  - Removing or installing main units
- Before you start to work on the machine, unplug the power cord. If you cannot unplug it, ask the customer to power-off the wall box that supplies power to the machine, and to lock the wall box in the off position.
- If you need to work on a machine that has *exposed* electrical circuits, observe the following precautions:
  - Ensure that another person, familiar with the power-off controls, is near you.

    Attention: Another person must be there to switch off the power, if necessary.
  - Use only one hand when working with powered-on electrical equipment; keep the other hand in your pocket or behind your back.

    Attention: An electrical shock can occur only when there is a complete circuit. By observing the above rule, you may prevent a current from passing through your body.
  - When using testers, set the controls correctly and use the approved probe leads and accessories for that tester.
  - Stand on suitable rubber mats (obtained locally, if necessary) to insulate you from grounds such as metal floor strips and machine frames.

  Observe the special safety precautions when you work with very high voltages; Instructions for these precautions are in the safety sections of maintenance information. Use extreme care when measuring high voltages.
- Regularly inspect and maintain your electrical hand tools for safe operational condition.
- Do not use worn or broken tools and testers.
- *Never assume* that power has been disconnected from a circuit. First, *check* that it has been powered off.
- Always look carefully for possible hazards in your work area. Examples of these hazards are moist floors, nongrounded power extension cables, power surges, and missing safety grounds.
- Do not touch live electrical circuits with the reflective surface of a plastic dental mirror. The surface is conductive; such touching can cause personal injury and machine damage.
- Do not service the following parts *with the power on* when they are removed from their normal operating places in a machine:
  - Power supply units
  - Pumps
  - Blowers and fans
  - Motor generators
  - Similar units to listed above

  This practice ensures correct grounding of the units.
- If an electrical accident occurs:

– Use caution; do not become a victim yourself.
– Switch off power.
– Send another person to get medical aid.

Electronic emissions notices

For electronic emission information on Class B digital devices, refer to the corresponding information in the *User Guide*.

CE

Safety inspection guide

The purpose of this inspection guide is to assist you in identifying potentially unsafe conditions. As each machine was designed and built, required safety items were installed to protect users and service technicians from injury. This guide addresses only those items. You should use good judgment to identify potential safety hazards due to attachment of non-ThinkPad features or options not covered by this inspection guide.

If any unsafe conditions are present, you must determine how serious the apparent hazard could be and whether you can continue without first correcting the problem.

Consider these conditions and the safety hazards they present:

- Electrical hazards, especially primary power (primary voltage on the frame can cause serious or fatal electrical shock)
- Explosive hazards, such as a damaged CRT face or a bulging capacitor
- Mechanical hazards, such as loose or missing hardware

To determine whether there are any potentially unsafe conditions, use the following checklist at the beginning of every service task. Begin the checks with the power off, and the power cord disconnected.

Checklist:

1. Check exterior covers for damage (loose, broken, or sharp edges).
2. Power off the computer. Disconnect the power cord.
3. Check the power cord for:
   a. A third-wire ground connector in good condition. Use a meter to measure third-wire ground continuity for 0.1 ohm or less between the external ground pin and the frame ground.
   b. The power cord should be the type specified in the parts list.
   c. Insulation must not be frayed or worn.
4. Check for cracked or bulging batteries.
5. Remove the cover.
6. Check for any obvious non-ThinkPad alterations. Use good judgment as to the safety of any non-ThinkPad alterations.
7. Check inside the unit for any obvious unsafe conditions, such as metal filings, contamination, water or other liquids, or signs of fire or smoke damage.
8. Check for worn, frayed, or pinched cables.
9. Check that the power-supply cover fasteners (screws or rivets) have not been removed or tampered with.

Handling devices that are sensitive to electrostatic discharge

Any computer part containing transistors or integrated circuits (ICs) should be considered sensitive to electrostatic discharge(ESD). ESD damage can occur when there is a difference in charge between objects. Protect against ESD damage by equalizing the charge so that the machine, the part, the work mat, and the person handling the part are all at the same charge.

Notes:

1. Use product-specific ESD procedures when they exceed the requirements noted here.
2. Make sure that the ESD protective devices you use have been certified (ISO 9000) as fully effective.

When handling ESD-sensitive parts:

- Keep the parts in protective packages until they are inserted into the product.
- Avoid contact with other people.
- Wear a grounded wrist strap against your skin to eliminate static on your body.
- Prevent the part from touching your clothing. Most clothing is insulative and retains a charge even when you are wearing a wrist strap.
- Use a grounded work mat to provide a static-free work surface. The mat is especially useful when handling ESD-sensitive devices.
- Select a grounding system, such as those listed below, to provide protection that meets the specific service requirement.

  Note: The use of a grounding system to guard against ESD damage is desirable but not necessary.

  – Attach the ESD ground clip to any frame ground, ground braid, or green-wire ground.
  – When working on a double-insulated or battery-operated system, use an ESD common ground or reference point. You can use coax or connector-outside shells on these systems.
  – Use the round ground prong of the ac plug on ac-operated computers.

Grounding requirements

Electrical grounding of the computer is required for operator safety and correct system function. Proper grounding of the electrical outlet can be verified by a certified electrician.

Safety notices (multilingual translations)

The safety notices in this section are provided in the following languages:

- English
- Arabic
- Brazilian Portuguese
- French
- German
- Hebrew
- Japanese
- Korean
- Spanish
- Traditional Chinese

DANGER

Before the computer is powered on after FRU replacement, make sure all screws, springs, and other small parts are in place and are not left loose inside the computer. Verify this by shaking the computer and listening for rattling sounds. Metallic parts or metal flakes can cause electrical shorts.

DANGER

Some standby batteries contain a small amount of nickel and cadmium. Do not disassemble a standby battery, recharge it, throw it into fire or water, or short-circuit it. Dispose of the battery as required by local ordinances or regulations. Use only the battery in the appropriate parts listing. Use of an incorrect battery can result in ignition or explosion of the battery.

DANGER

The battery pack contains small amounts of nickel. Do not disassemble it, throw it into fire or water, or short-circuit it. Dispose of the battery pack as required by local ordinances or regulations. Use only the battery in the appropriate parts listing when replacing the battery pack. Use of an incorrect battery can result in ignition or explosion of the battery.

DANGER

The lithium battery can cause a fire, an explosion, or a severe burn. Do not recharge it, remove its polarized connector, disassemble it, heat it above 100°C (212°F), incinerate it, or expose its cell contents to water. Dispose of the battery as required by local ordinances or regulations. Use only the battery in the appropriate parts listing. Use of an incorrect battery can result in ignition or explosion of the battery.

DANGER

If the LCD breaks and the fluid from inside the LCD gets into your eyes or on your hands, immediately wash the affected areas with water for at least 15 minutes. Seek medical care if any symptoms from the fluid are present after washing.

DANGER

To avoid shock, do not remove the plastic cover that protects the lower part of the inverter card.

DANGER

Though the main batteries have low voltage, a shorted or grounded battery can produce enough current to burn personnel or combustible materials.

DANGER

Unless hot swap is allowed for the FRU being replaced, do as follows before removing it: power off the computer, unplug all power cords from electrical outlets, remove the battery pack, and disconnect any interconnecting cables.

قبل اعادة تشغيل الحاسب بعد الانتهاء من استبدال FRU، تأكد من أنه قد تم اعادة كل من المسامير و السوست وكل الأجزاء الصغيرة الأخرى في أماكنهم ولم يتم فقدهم داخل الحاسب.
ويمكن التحقق من ذلك عن طريق هز الحاسب والاستماع لأي صوت صاخب يصدر منه.
قد تؤدي الأجزاء أو الرقائق المعدنية الى حدوث دائرة قصر.

تحتوي بعض البطاريات الاحتياطية على كمية صغيرة من مادتي النيكل والكادميوم. لا تقم بفك أو اعادة شحن البطارية الاحتياطية ولا تقم أيضا بالقاءها في النار أو الماء ولا تتسبب في احداث دائرة قصر بها. قم بالتخلص من البطارية كما هو موضح في القوانين المحلية.
استخدم نوع البطارية المحدد والذي يوصى باستخدامه. حيث أنه قد يؤدي استخدام نوع بطارية غير صحيح الى اشتعالها أو انفجارها.

تحتوي حزمة البطارية على كمية صغيرة من مادة النيكل. لا تقم بفكها أو القاءها في النار أو الماء ولا تتسبب في احداث دائرة قصر بها. تخلص من حزمة البطارية وفقا لما هو موضح في القوانين المحلية. قم، عند استبدال حزمة البطارية، باستخدام الأنواع المحددة فقط والتي يوصى باستخدامها. حيث أنه قد يؤدي استخدام نوع بطارية غير صحيح الى اشتعالها أو انفجارها.

خطر

قد تتسبب بطارية الليثيوم في حدوث حريق أو انفجار أو حدوث حروق شديدة. لا تقم باعادة شحن البطارية أو ازالة موصل الاستقطاب الخاص بها ولا تحاول أيضا فكها أو تسخينها لأكثر من ١٠٠ درجة منوية (٢١٢ فهرنهايت) أو حرقها أو تعريض محتويات الخانة الخاصة بها للماء. قم بالتخلص من البطارية وفقا لما هو موضح في القوانين المحلية. استخدم نوع البطارية المحدد والذي يوصى باستخدامه. حيث أنه قد يؤدي استخدام نوع بطارية غير صحيح الى اشتعالها أو انفجارها.

خطر

اذا ما انكسرت شاشة LCD ولامس السائل الداخلي عينيك أو يديك، قم في الحال بغسلهما بالماء لمدة لا تقل عن ١٥ دقيقة. اذا ما وجدت أي أعراض بعد الغسل اطلب عندئذ المساعدة الطبية.

خطر

لتجنب التعرض لأي صدمات، لا تقم بازالة الغطاء البلاستيكي الذي يحمي الجزء الأسفل من بطاقة العاكس.

خطر

على الرغم من أن البطاريات الرئيسية يكون لها جهد منخفض، الا أنه قد تقوم البطاريات التي حدث قصور بها أو التي تم توصيلها أرضيا باصدار تيار يكفي لحدوث حروق للأفراد أو تعرض المواد القابلة للاشتعال للحريق.

خطر

ما لم يتم السماح بالتبديل الفوري لأي FRU الجاري استبداله بدون ضرورة اغلاق النظام، قم بتنفيذ ما يلي قبل ازالته: قم بايقاف تشغيل الحاسب ونزع كل أسلاك الطاقة من المخارج الكهربائية وقم أيضا بازالة حزمة البطارية ثم قم بفصل أي كابلات متصلة.

PERIGO

Antes de ligar o computador após a substituição da FRU, certifique-se de que todos os parafusos, molas e outras peças pequenas estejam no lugar e não estejam soltos dentro do computador. Verifique isso sacudindo o computador e procurando ouvir sons de peças soltas. Peças metálicas ou lascas de metal podem causar curto-circuito.

PERIGO

Algumas baterias reserva contêm uma pequena quantidade de níquel e cádmio. Não desmonte uma bateria reserva, recarregue-a, jogue-a no fogo ou na água, ou deixe-a entrar em curto-circuito. Descarte a bateria conforme requerido pelas leis ou regulamentos locais. Use somente a bateria nas partes listadas apropriadas. O uso de uma bateria incorreta pode resultar em combustão ou explosão da bateria.

PERIGO

O pacote da bateria contém uma pequena quantidade de níquel. Não o desmonte, jogue-o no fogo ou na água, ou deixe-o entrar em curto-circuito. Descarte o pacote da bateria conforme requerido pelas leis ou regulamentos locais. Use somente a bateria nas partes listadas apropriadas ao substituir o pacote da bateria. O uso de uma bateria incorreta pode resultar em combustão ou explosão da bateria.

PERIGO

A bateria de lítio pode causar incêndio, explosão ou graves queimaduras. Não a recarregue, remova seu conector polarizado, desmonte-a, aqueça-a acima de 100°C (212°F), incinere-a, ou exponha o conteúdo de sua célula à água. Descarte a bateria conforme requerido pelas leis ou regulamentos locais. Use somente a bateria nas partes listadas apropriadas. O uso de uma bateria incorreta pode resultar em combustão ou explosão da bateria.

PERIGO

Se o LCD quebrar e o fluido de dentro dele entrar em contato com seus olhos ou com suas mãos, lave as áreas afetadas imediatamente com água durante pelo menos 15 minutos. Procure cuidados médicos se algum sintoma causado pelo fluido surgir após a lavagem.

PERIGO

Para evitar choque elétrico, não remova a capa plástica que protege a parte inferior da placa inversora.

PERIGO

Embora as principais baterias possuam baixa voltagem, uma bateria em curto-circuito ou aterrada pode produzir corrente o bastante para queimar materiais de pessoal ou inflamáveis.

PERIGO

A menos que uma hot swap seja permitida para a FRU que está sendo substituída, faça o seguinte antes de removê-la: desligue o computador, desconecte todos os cabos de energia das tomadas, remova o pacote de baterias e desconecte quaisquer cabos de interconexão.

DANGER

Avant de remettre l'ordinateur sous tension après remplacement d'une unité en clientèle, vérifiez que tous les ressorts, vis et autres pièces sont bien en place et bien fixées. Pour ce faire, secouez l'unité et assurez-vous qu'aucun bruit suspect ne se produit. Des pièces métalliques ou des copeaux de métal pourraient causer un court-circuit.

DANGER

Certaines batteries de secours contiennent du nickel et du cadmium. Ne les démontez pas, ne les rechargez pas, ne les exposez ni au feu ni à l'eau. Ne les mettez pas en court-circuit. Pour les mettre au rebut, conformez-vous à la réglementation en vigueur. Lorsque vous remplacez la pile de sauvegarde ou celle de l'horloge temps réel, veillez à n'utiliser que les modèles cités dans la liste de pièces détachées adéquate. Une batterie ou une pile inappropriée risque de prendre feu ou d'exploser.

DANGER

La batterie contient du nickel. Ne la démontez pas, ne l'exposez ni au feu ni à l'eau. Ne la mettez pas en court-circuit. Pour la mettre au rebut, conformez-vous à la réglementation en vigueur. Lorsque vous remplacez la batterie, veillez à n'utiliser que les modèles cités dans la liste de pièces détachées adéquate. En effet, une batterie inappropriée risque de prendre feu ou d'exploser.

DANGER

La pile de sauvegarde contient du lithium. Elle présente des risques d'incendie, d'explosion ou de brûlures graves. Ne la rechargez pas, ne retirez pas son connecteur polarisé et ne la démontez pas. Ne l'exposez pas à une temperature supérieure à 100°C, ne la faites pas brûler et n'en exposez pas le contenu à l'eau. Mettez la pile au rebut conformément à la réglementation en vigueur. Une pile inappropriée risque de prendre feu ou d'exploser.

DANGER

Si le panneau d'affichage à cristaux liquides se brise et que vous recevez dans les yeux ou sur les mains une partie du fluide, rincez-les abondamment pendant au moins quinze minutes. Consultez un médecin si des symptômes persistent après le lavage.

DANGER

Afin d'éviter tout risque de choc électrique, ne retirez pas le cache en plastique protégeant la partie inférieure de la carte d'alimentation.

DANGER

Bien que le voltage des batteries principales soit peu élevé, le court-circuit ou la mise à la masse d'une batterie peut produire suffisamment de courant pour brûler des matériaux combustibles ou causer des brûlures corporelles graves.

DANGER

Si le remplacement à chaud n'est pas autorisé pour l'unité remplaçable sur site que vous remplacez, procédez comme suit avant de retirer l'unité : mettez l'ordinateur hors tension, débranchez tous les cordons d'alimentation des prises de courant, retirez le bloc de batterie et déconnectez tous les câbles d'interconnexion.

VORSICHT

Bevor nach einem FRU-Austausch der Computer wieder angeschlossen wird, muß sichergestellt werden, daß keine Schrauben, Federn oder andere Kleinteile fehlen oder im Gehäuse vergessen wurden. Der Computer muß geschüttelt und auf Klappergeräusche geprüft werden. Metallteile oder-splitter können Kurzschlüsse erzeugen.

VORSICHT

Die Bereitschaftsbatterie, die sich unter dem Diskettenlaufwerk befindet, kann geringe Mengen Nickel und Cadmium enthalten. Sie darf nur durch die Verkaufsstelle oder den IBM Kundendienst ausgetauscht werden. Sie darf nicht zerlegt, wiederaufgeladen, kurzgeschlossen, oder Feuer oder Wasser ausgesetzt werden. Die Batterie kann schwere Verbrennungen oder Verätzungen verursachen. Bei der Entsorgung die örtlichen Bestimmungen für Sondermüll beachten. Beim Ersetzen der Bereitschafts-oder Systembatterie nur Batterien des Typs verwenden, der in der Ersatzteilliste aufgeführt ist. Der Einsatz falscher Batterien kann zu Entzündung oder Explosion führen.

VORSICHT

Akkus enthalten geringe Mengen von Nickel. Sie dürfen nicht zerlegt, wiederaufgeladen, kurzgeschlossen, oder Feuer oder Wasser ausgesetzt werden. Bei der Entsorgung die örtlichen Bestimmungen für Sondermüll beachten. Beim Ersetzen der Batterie nur Batterien des Typs verwenden, der in der Ersatzteilliste aufgeführt ist. Der Einsatz falscher Batterien kann zu Entzündung oder Explosion führen.

VORSICHT

Die Systembatterie ist eine Lithiumbatterie. Sie kann sich entzünden, explodieren oder schwere Verbrennungen hervorrufen. Batterien dieses Typs dürfen nicht aufgeladen, zerlegt, über 100°C erhitzt oder verbrannt werden. Auch darf ihr Inhalt nicht mit Wasser in Verbindung gebracht oder der zur richtigen Polung angebrachte Verbindungsstecker entfernt werden. Bei der Entsorgung die örtlichen Bestimmungen für Sondermüll beachten. Beim Ersetzen der Batterie nur Batterien des Typs verwenden, der in der Ersatzteilliste aufgeführt ist. Der Einsatz falscher Batterien kann zu Entzündung oder Explosion führen.

VORSICHT

Die Leuchtstoffröhre im LCD-Bildschirm enthält Quecksilber. Bei der Entsorgung die örtlichen Bestimmungen für Sondermüll beachten. Der LCD-Bildschirm besteht aus Glas und kann zerbrechen, wenn er unsachgemäß behandelt wird oder der Computer auf den Boden fällt. Wenn der Bildschirm beschädigt ist und die darin befindliche Flüssigkeit in Kontakt mit Haut und Augen gerät, sollten die betroffenen Stellen mindestens 15 Minuten mit Wasser abgespült und bei Beschwerden anschließend ein Arzt aufgesucht werden.

VORSICHT

Aus Sicherheitsgründen die Kunststoffabdeckung, die den unteren Teil der Spannungswandlerplatine umgibt, nicht entfernen.

VORSICHT

Obwohl Hauptbatterien eine niedrige Spannung haben, können sie doch bei Kurzschluß oder Erdung genug Strom abgeben, um brennbare Materialien zu entzünden oder Verletzungen bei Personen hervorzurufen.

VORSICHT

Wenn ein Austausch der FRU bei laufendem Betrieb nicht erlaubt ist, gehen Sie beim Austausch der FRU wie folgt vor: Schalten Sie den Computer aus, ziehen Sie alle Netzkabel von den Netzsteckdosen ab, entfernen Sie den Akku und ziehen Sie alle miteinander verbundenen Kabel ab.

סכנה

לפני הפעלת המחשב לאחר החלפת FRU יש לוודא שכל הברגים, הקפיצים, וחלקים קטנים אחרים נמצאים במקומם ואינם חופשיים לזוז בתוך המחשב. כדי לוודא זאת, יש לטלטל את המחשב ולהקשיב לגילוי קולות שקשוק. חלקי או שבבי מתכת עלולים לגרום לקצרים חשמליים.

סכנה

סוללת המתנה מסוימות מכילות כמות קטנה של ניקל וקדמיום. אין לפרק סוללת המתנה, לטעון אותה מחדש, להשליך אותה לאש או למים או לקצר אותה. יש לשלק את הסוללה כנדרש על ידי התקנות והחוקים המקומיים. יש להשתמש רק בסוללה המופיעה ברשימת החלקים המתאימה. שימוש בסוללה לא מתאימה עלול לגרום להצתה או התפוצצות של הסוללה.

סכנה

מארז הסוללה מכיל כמות קטנה של ניקל וקדמיום. אין לפרק את מארז הסוללה, להשליך אותו לאש או למים או לקצר אותו. יש לסלק את מארז הסוללה כנדרש על ידי התקנות והחוקים המקומיים. יש להשתמש רק בסוללה המופיעה ברשימת החלקים המתאימה בזמן החלפת מארז הסוללה. שימוש בסוללה לא מתאימה עלול לגרום להצתה או התפוצצות של הסוללה.

סכנה

סוללת הליתיום עלולה לגרום לשריפה, להתפוצצות או לכוויות קשות. אין לטעון אותה מחדש, לסלק את המחבר המקוטב שלה, לפרק אותה או לחמם אותה לטמפרטורה העולה על 100 מעלות צלזיוס. אין לשרוף את הסוללה ואין לחשוף את תוכן התא למים. יש לסלק את הסוללה כנדרש בתקנות ובחוקים המקומיים. יש להשתמש רק בסוללה המופיעה ברשימת החלקים המתאימים. שימוש בסוללה אחרת עלול לגרום לסכנת שריפה או התפוצצות.

סכנה

אם מסך הגביש הנוזלי (LCD) נשבר והנוזל מתוך המסך בא במגע עם עיניכם או ידיכם, שטפו את האזורים הנגועים מיד במים במשך 15 דקות לפחות. פנו לקבלת עזרה רפואית אם תסמינים הנובעים מחמגע עם הנוזל נמשכים לאחר השטיפה.

סכנה

כדי למנוע התחשמלות, אין להסיר את מכסה הפלסטיק המגן על חלקו התחתון של הכרטיס החמרך.

סכנה

אף שהסוללות הראשיות הן בעלות מתח נמוך, סוללה מקוצרת או מוארקת עלולה להפיק זרם מספיק לגרימת כוויות או להצתת חומרים דליקים.

סכנה

אלא אם כן מותרת יהחלפה חמה של ה-FRU המוחלף, פעלו כדלהלן לפני הסרתו:
כבו את המחשב, נתקו את כל כבלי החשמל מהשקעים, הוציאו את מארז הסוללות ונתקו את כל הכבלים המחוברים.

危険

FRU の交換後、 ThinkPad の電源を入れる前に、ねじ、バネ、その他の小さな部品がすべて正しい位置にあり、また ThinkPad の内部で緩んでいないことを確認してください。
これを確認するには、 ThinkPad を振って、カチャカチャと音がしないか確かめます。金属部品や金属破片はショートの原因になることがあります。

危険

予備バッテリーの中には少量のニッケルとカドミウムが含まれているものがあります。したがって、予備バッテリーの分解、再充電、火または水の中への投棄、またはショートさせることは決して行わないでください。バッテリーを廃棄する場合は地方自治体の条例に従ってください。適切なパーツ・リストにあるバッテリーだけを使用してください。誤ったバッテリーを使用すると、バッテリーが発火したり、爆発したりすることがあります。

危険

バッテリー・パックには少量のニッケルが含まれています。バッテリー・パックを分解したり、火または水の中に投げ込んだり、ショートさせないでください。バッテリー・パックの廃棄にあたっては、地方自治体の条例または規則に従ってください。バッテリー・パックを交換するときは、適切なパーツ・リストにあるバッテリーだけを使用してください。誤ったバッテリーを使用すると、バッテリーが発火したり、爆発したりすることがあります。

危険

リチウム・バッテリーは、火災、爆発、または重症のやけどを引き起こすことがあります。バックアップ・バッテリーの充電、その極性コネクターの取り外し、バッテリー本体の分解、
100 ℃ (212 ˚F) 以上への加熱、焼却、電池の中身を水に浸すことはしないでください。バッテリーを廃棄する場合は地方自治体の条例に従ってください。適切なパーツ・リストにあるバッテリーだけを使用してください。誤ったバッテリーを使用すると、バッテリーが発火したり、爆発したりすることがあります。

危険

LCD が破損し、 LCD の中の液体が目に入ったり、手に触れたりした場合は、液体が触れた部分を少なくとも 15 分間洗い流してください。洗い流した後に、液体によって何らかの症状が現れた場合は、医師の治療を受けてください。

危険

感電を防ぐため、インバーター・カードの下部を保護しているプラスチック・カバーを外さないでください。

危険

メイン・バッテリーの電圧は低くても、ショートしたり、接地したバッテリーが、作業者にやけどを負わせたり、可燃物を燃やすだけの電流を発生させる場合があります。

危険

交換しようとしている FRU がホット・スワップに対応していない場合、それを取り外す前に、コンピューターの電源をオフにし、すべての電源コードをコンセントから抜き、バッテリー・パックを取り外して、相互接続しているケーブルをすべて切り離してください。

위험

FRU를 교체하고 나서 컴퓨터 전원을 켜기 전에 모든 나사, 스프링 및 기타 작은 부품들이 올바른 위치에 있는지, 컴퓨터 내부에 단단하게 연결되어 있는지 확인하십시오. 컴퓨터를 흔들어 달깍거리는 소리가 나지 않는지 확인하십시오. 금속 부품 또는 금속 조각은 누전을 일으킬 수 있습니다.

위험

일부 보조 배터리에는 소량의 니켈 및 카트뮴이 포함되어 있습니다. 보조 배터리를 분해하거나, 다시 충전하거나, 불 또는 물에 던지거나, 단락시키지 마십시오. 배터리 팩을 폐기할 때에는 해당 지역의 법률 규정을 따르십시오. 배터리 팩을 교체할 때에는 올바른 배터리만 사용하십시오. 올바르지 않은 배터리를 사용하면 배터리가 발화되거나 폭발할 수 있습니다.

위험

배터리 팩에는 소량의 니켈이 포함되어 있습니다. 배터리 팩을 분해하거나, 불 또는 물에 던지거나, 단락시키지 마십시오. 배터리 팩을 폐기할 때에는 해당 지역의 법률 규정을 따르십시오. 배터리 팩을 교체할 때에는 올바른 배터리만 사용하십시오. 올바르지 않은 배터리를 사용하면 배터리가 발화되거나 폭발할 수 있습니다.

위험

리튬 배터리는 화재, 폭발 또는 심각한 화상을 일으킬 수 있습니다. 리튬 배터리를 다시 충전하거나, 극성 커넥터를 제거하거나, 분해하거나, 100C(212F) 이상으로 가열하거나, 소각하거나, 전지 내용물을 물에 노출시키지 마십시오. 배터리를 폐기할 때에는 해당 지역을 법률 규정을 따르십시오. 올바른 배터리만 사용하십시오. 올바르지 않은 배터리를 사용하면 배터리가 발화되거나 폭발할 수 있습니다.

위험

LCD가 파손되어 LCD 내부의 액체가 눈에 들어가거나 손에 묻으면 즉시 깨끗한 물로 15분 이상 닦아 내십시오. 씻은 후에 조금이라도 이상을 느끼면 즉시 병원에 가서 의사의 진찰을 받아야 합니다.

위험

전기적 위험을 방지하려면 인버터 카드의 아래 부분을 보호하는 플라스틱 덮개를 제거하지 마십시오.

위험

기본 배터리의 전압은 낮지만, 단락되거나 접지된 배터리는 화상을 입히기에 충분한 전류와 가연성 물질을 발생시킬 수 있습니다.

위험

FRU 교체 시 Hot Swap이 지원되지 않는 경우, FRU를 제거하기 전에 컴퓨터의 전원을 끄고, 전기 콘센트에서 전원 코드를 분리하고, 배터리를 제거한 후, 연결된 모든 케이블을 분리하십시오.

PELIGRO

Antes de encender el sistema despues de sustituir una FRU, compruebe que todos los tornillos, muelles y demás piezas pequeñas se encuentran en su sitio y no se encuentran sueltas dentro del sistema. Compruébelo agitando el sistema y escuchando los posibles ruidos que provocarían. Las piezas metálicas pueden causar cortocircuitos eléctricos.

PELIGRO

Algunas baterías de reserva contienen una pequeña cantidad de níquel y cadmio. No las desmonte, ni recargue, ni las eche al fuego o al agua ni las cortocircuite. Deséchelas tal como dispone la normativa local. Utilice sólo baterías que se encuentren en la lista de piezas. La utilización de una batería no apropiada puede provocar la ignición o explosión de la misma.

PELIGRO

Las baterías contienen pequeñas cantidades de níquel. No las desmonte, ni recargue, ni las eche al fuego o al agua ni las cortocircuite. Deséchelas tal como dispone la normativa local. Utilice sólo baterías que se encuentren en la lista de piezas al sustituir la batería. La utilización de una batería no apropiada puede provocar la ignición o explosión de la misma.

PELIGRO

La batería de repuesto es una batería de litio y puede provocar incendios, explosiones o quemaduras graves. No la recargue, ni quite el conector polarizado, ni la desmonte, ni caliente por encima de los 100°C (212°F), ni la incinere ni exponga el contenido de sus celdas al agua. Deséchela tal como dispone la normativa local.

PELIGRO

Si la LCD se rompe y el fluido de su interior entra en contacto con sus ojos o sus manos, lave inmediatamente las áreas afectadas con agua durante 15 minutos como mínimo. Obtenga atención medica si se presenta algún síntoma del fluido despues de lavarse.

PELIGRO

Para evitar descargas, no quite la cubierta de plástico que rodea la parte baja de la tarjeta invertida.

PELIGRO

Aunque las baterías principales tienen un voltaje bajo, una batería cortocircuitada o con contacto a tierra puede producir la corriente suficiente como para quemar material combustible o provocar quemaduras en el personal.

PELIGRO

Salvo que se permita el intercambio en caliente para la unidad sustituible localmente, realice lo siguiente antes de extraerla: apague el sistema, desconecte todos los cables de alimentación de las tomas de alimentación eléctrica, extraiga la batería y desconecte los cables de interconexión.

危險

完成 FRU 更換之後，在開啟電腦的電源之前，請確定所有螺絲、彈簧及其他小零件都已歸位，沒有遺留在電腦內部。
若要確認這一點，請搖晃電腦，聽聽看是否有卡嗒的聲響。
金屬零件或儀錶的火花會造成電線短路。

危險

部分備用電池含有微量的鋰和鎘。請勿拆開備用電池、再充電、丟入火或水中，或使其形成短路。請按照當地法令或規定來棄置電池。

僅限使用零件清單中的電池。使用不適當的電池會導致電池起火或爆炸。

危險

電池套件含有微量的鋰。請勿拆開電池套件、丟入火或水中，或使其形成短路。
請按照當地法令或規定來棄置電池套件。

更換電池套件時，僅限使用零件清單中的電池。使用不適當的電池會導致電池起火或爆炸。

危險

鋰電池會導致起火、爆炸或嚴重燒傷。請勿再充電、拔除其電極接頭、拆開、加熱超過 100°C (212°F) 、焚燒，或讓電池組成物浸到水。請按照當地法令或規定來棄置電池。
僅限使用零件清單中的電池。使用不適當的電池會導致電池起火或爆炸。

危險

如果 LCD 破裂導致 LCD 流出的液體沾到您的眼睛或手，請立即以清水沖洗沾染部位至少 15 分鐘。如果在清洗後出現該液體所造成的任何症狀，請就醫治療。

危險

為避免電擊，請勿拆下轉換卡下面的塑膠護蓋。

危險

雖然主電池的電壓很低，但短路或接地電池所產生的電流，仍足以使人燒傷或使可燃物質起火。

危險

除非 FRU 允許以熱抽換來替換，否則請依下列方式將其移除：將電腦關機，拔除插座上所有電源線，移除電池包，並拔開任何交互連接的線材。

Laser compliance statement (multilingual translations)

The laser compliance statements in this section are provided in the following languages:

- English
- Arabic
- Brazilian Portuguese
- French
- German
- Hebrew
- Japanese
- Korean
- Spanish
- Traditional Chinese

CAUTION:
When laser products (such as CD-ROMs, DVD drives, fiber optic devices, or transmitters) are installed, note the following:

- **Do not remove the covers. Removing the covers of the laser product could result in exposure to hazardous laser radiation. There are no serviceable parts inside the device.**
- **Use of controls or adjustments or performance of procedures other than those specified herein might result in hazardous radiation exposure.**

DANGER

Some laser products contain an embedded Class 3A or Class 3B laser diode. Note the following.

Laser radiation when open. Do not stare into the beam, do not view directly with optical instruments, and avoid direct exposure to the beam.

تحذير:
عند تثبيت منتجات الليزر (مثل أقراص CD-ROM أو محركات تشغيل أقراص DVD أو أجهزة الألياف البصرية أو النواقل)، لاحظ ما يلي:

- لا تقم بنزع الغطاء. قد ينتج عن نزع غطاء منتج ليزر التعرض لأشعة ليزر في منتهى الخطورة. لا توجد أجزاء يمكن صيانتها داخل الجهاز.
- قد ينتج عن استخدام مفاتيح أو تنفيذ عمليات ضبط أو اجراءات بطريقة مختلفة عما هو محدد هنا التعرض لأشعة ليزر في منتهى الخطورة.

خطر

تحتوي بعض منتجات الليزر على صمام ثنائي ليزري مضمن من Class 3A أو Class 3B. لاحظ ما يلي.
توجد أشعة ليزر عند الفتح. لا تنظر للشعاع ولا تنظر بطريقة مباشرة باستخدام أدوات ضوئية وتجنب التعرض المباشر للشعاع.

CUIDADO:
Quando produtos a laser (como CD-ROMs, unidades de DVD, dispositivos de fibra ótica ou transmissores) estão instalados, observe o seguinte:

- **Não remova as tampas. A remoção das tampas do produto a laser pode resultar em exposição prejudicial à radiação de laser. Não há peças que permitam manutenção no interior do dispositivo.**
- **A utilização de controles ou ajustes ou a execução de procedimentos diferentes daqueles especificados aqui pode resultar em exposição perigosa à radiação.**

PERIGO

Algumas produtos a laser contêm um diodo de laser Classe 3A ou Classe 3B integrado. Observe o seguinte:

Radiação a laser quando aberta. Não olhe diretamente para o feixe a olho nu ou com instrumentos óticos e evite exposição direta ao feixe.

ATTENTION :
Si des produits laser (tels que des unités de CD, DVD, à fibre optique ou des émetteurs) sont installés, lisez les informations suivantes :

- **Ne retirez pas les carters. En ouvrant le produit laser, vous vous exposez au rayonnement dangereux du laser. Aucune pièce de l'unité n'est réparable.**
- **Pour éviter tout risque d'exposition au rayon laser, respectez les consignes de réglage et d'utilisation des commandes, ainsi que les procédures décrites dans le présent manuel.**

DANGER

Certains produits à laser contiennent une diode à laser intégrée de classe 3A ou 3B. Prenez connaissance des informations suivantes.

Rayonnement laser lorsque le carter est ouvert. Evitez toute exposition directe au rayon laser. Evitez de regarder fixement le faisceau ou de l'observer à l'aide d'instruments optiques.

Vorsicht:
Bei der Installation von Lasergeräten (wie CD-ROM-Laufwerken, DVD-Laufwerken, Einheiten mit Lichtwellenleitertechnik oder Sendern) Folgendes beachten:

- **Die Abdeckungen nicht entfernen. Durch Entfernen der Abdeckungen des Lasergeräts können gefährliche Laserstrahlungen freigesetzt werden. Das Gerät enthält keine zu wartenden Teile.**
- **Werden Steuerelemente, Einstellungen oder Durchführungen von Prozeduren anders als hier angegeben verwendet, kann gefährliche Laserstrahlung auftreten.**

Gefahr

Einige Lasergeräte enthalten eine Laserdiode der Klasse 3A oder 3B. Beachten Sie Folgendes:

Laserstrahlung bei geöffneter Verkleidung. Nicht in den Strahl blicken. Keine Lupen oder Spiegel verwenden. Strahlungsbereich meiden.

זהירות:
כאשר מוצרי לייזר (כגון תקליטורים, כונני DVD, התקני סיבים אופטיים או משדרים) מותקנים, שימו לב להנחיות הבאות:

- אל תסירו את הכיסויים. הסרת הכיסויים של מוצר הלייזר עלולה לגרום לחשיפה מסוכנת לקרינת לייזר. ההתקן אינם כוללים רכיבים להחלפה עצמית.
- שימוש בבקרות ובהתאמות שלא צוינו או ביצוע תהליכים שלא צוינו, יכולים לגרום לחשיפה מסוכנת לקרינה.

סכנה

כמה ממוצרי הלייזר מכילים דיודת לייזר מובנית Class 3A או Class 3B. שימו לב לדברים שלהלן.
קיימת פליטת קרני לייזר כאשר המוצר פתוח. אל תביטו ישירות אל הקרן, אל תביטו אל הקרן ישירות דרך אמצעים אופטיים, והימנעו מחשיפה ישירה לקרן.

警告：
レーザー製品 (CD-ROM、DVD ドライブ、光ファイバー装置、または送信機など) を取り付ける場合には、以下のことに注意してください。

- カバーを外さないこと。カバーを取り外すと有害なレーザー光を浴びることがあります。この装置の内部には保守が可能な部品はありません。
- 本書で指定された内容以外の、お客様による整備、調整、または手順を行った場合、レーザー放射の危険があります。

危険

一部のレーザー製品には、クラス 3A またはクラス 3B のレーザ ー・ダイオードが組み込まれています。次の点に注意してください。

開けるとレーザー光が放射されます。光線を見つめたり、光学機械を使って直接見たり、光線を直接浴びることは避けてください。

경고:
레이저 제품(CD-ROM, DVD 드라이브, 광섬유 장치 또는 송신기)이 설치되어 있는 경우, 다음과 같은 취급 주의사항을 참고하십시오.

- **덮개를 제거하지 마십시오. 레이저 제품의 덮개를 제거하면 유해한 레이저 복사에 노출될 위험이 있습니다. 장치 내부에는 사용자가 수리할 수 있는 부분이 없습니다.**
- **본 내용에서 설명한 이외의 방법으로 드라이브를 조정하거나 제어 또는 작동하는 경우, 해로운 레이저 복사에 노출될 수 있습니다.**

위험

일부 레이저 제품은 임베디드 클래스 3A 또는 클래스 3B 레이저 다이오드가 포함되어 있습니다. 다음 주의사항을 유의하십시오.

드라이브의 덮개를 열면 전자파가 발생합니다. 광선 또는 광 장치를 직접 보거나 광선에 노출되지 않도록 주의하십시오.

PRECAUCIÓN:
Cuando haya instalados productos láser (por ejemplo, unidades de CD-ROM, unidades de DVD, dispositivos de fibra óptica o transmisores), tenga en cuenta lo siguiente:

- **No extraiga las cubiertas. La extracción de las cubiertas del producto láser podría producir una exposición a radiación láser peligrosa. No hay ninguna pieza dentro del dispositivo que pueda reparar.**
- **La utilización de controles, ajustes o la realización de procedimientos diferentes a los especificados puede dar como resultado una exposición peligrosa a radiaciones.**

PELIGRO

Algunos productos láser contienen un diodo láser de Clase 3A o Clase 3B incorporado. Tenga en cuenta lo siguiente.

Emite radiación láser cuando está abierto. No fije la vista en el rayo, no lo mire directamente con instrumentos ópticos y evite la exposición directa al rayo.

警告：
安裝雷射產品（如 CD-ROM、DVD 光碟機、光纖裝置或轉送器）時，請注意下列事項：

- **請勿卸下外蓋。卸下雷射產品的外蓋可能導致曝露於危險的雷射輻射。裝置內沒有可維修的零件。**
- **若不遵守本文規定的控制、調整或操作程序，可能會導致危險的輻射外洩。**

危險

某些雷射產品包含內嵌式 3A 類或 3B 類雷射二極體。這類光碟機的使用者應注意下列聲明。

在開啟光碟機時，會有雷射輻射。請勿直視光束或以光學儀器直接觀看光束，並避免直接暴露在光束中。

Chapter 2. Important service information

This chapter presents following important service information that applies to all machine types supported by this manual:

- "Strategy for replacing FRUs" on page 23
  - "Strategy for replacing a hard disk drive" on page 24
  - "Important notice for replacing a system board" on page 24
  - "How to use error message" on page 24
- "Strategy for replacing FRUs for CTO, CMV, and GAV" on page 25
  - "Product definition" on page 25
  - "FRU identification for CTO, CMV, and GAV products" on page 25

Important:

UEFI BIOS and device driver fixes are customer-installable. The UEFI BIOS and device drivers are posted on the customer support site
http://www.lenovo.com/support
System Disassembly/Reassembly videos that show the FRU removals or replacements for the Lenovo® authorized service technicians are available in the following support site:
http://www.lenovoservicetraining.com/ion/
Advise customers to contact the Customer Support Center at 800-426-7378 if they need assistance in obtaining or installing any software fixes, drivers, and UEFI BIOS downloads.
Customers in Canada should call the Customer Support Center at 800-565-3344 for assistance or download information.

Strategy for replacing FRUs

Before replacing parts:

Make sure that all software fixes, drivers, and UEFI BIOS downloads are installed before replacing any FRUs listed in this manual.

After a system board is replaced, ensure that the latest UEFI BIOS is loaded to the system board before completing the service action.

To download software fixes, drivers, and UEFI BIOS, do as follows:

1. Go to http://www.lenovo.com/support.
2. Enter the product number of the computer or press Auto-detect button on the screen.
3. Select **Downloads and drivers**.
4. Follow the directions on the screen and install the necessary software.

Use the following strategy to prevent unnecessary expense for replacing and servicing FRUs:

- **If you are instructed to replace a FRU but the replacement does not correct the problem, reinstall the original FRU before you continue**.
- Some computers have both a processor board and a system board. If you are instructed to replace either the processor board or the system board, and replacing one of them does not correct the problem, reinstall that board, and then replace the other one.
- If an adapter or a device consists of more than one FRU, any of the FRUs may be the cause of the error. Before replacing the adapter or device, remove the FRUs, one by one, to see if the symptoms change. Replace only the FRU that changed the symptoms.

© Copyright Lenovo 2011

Attention: The setup configuration on the computer you are servicing may have been customized. Running Automatic Configuration may alter the settings. Note the current configuration settings (using the View Configuration option); then, when service has been completed, verify that those settings remain in effect.

Strategy for replacing a hard disk drive

Always try to run a low-level format before replacing a hard disk drive. This will cause all customer data on the hard disk to be lost. Be sure that the customer has a current backup of the data before doing this task.

Attention: The drive startup sequence in the computer you are servicing may have been changed. Be extremely careful during write operations such as copying, saving, or formatting. If you select an incorrect drive, data or programs can be overwritten.

Important notice for replacing a system board

Some components mounted on a system board are very sensitive. Improper handling of a system board can cause damage to those components, and may cause a system malfunction.

Attention: When handling a system board:

- Do not drop a system board or apply any excessive force to it.
- Avoid rough handling of any kind.
- Avoid bending a system board and hard pushing to prevent cracking at each BGA (Ball Grid Array) chipset.

How to use error message

Use the error codes displayed on the screen to diagnose failures. If more than one error code is displayed, begin the diagnosis with the first error code. Whatever causes the first error code may also cause false error codes. If no error code is displayed, see whether the error symptom is listed in the Symptom-to-FRU Index for the computer you are servicing.

Strategy for replacing FRUs for CTO, CMV, and GAV

Product definition

Dynamic Configure To Order (CTO)

This provides the ability for a customer to configure an IBM® or a Lenovo solution from an eSite, and have this configuration sent to fulfillment, where it is built and shipped directly to the customer. The machine label, Product Entitlement Warehouse (PEW), eSupport, and the HMM will load these products as the 4-digit MT and 3-digit model, where model = “CTO” (Example: 1829-CTO).

Custom Model Variant (CMV)

This is a unique configuration that has been negotiated between IBM or Lenovo and the customer. A unique 4-digit MT and 3-digit model is provided to the customer to place orders (Example: 1829-W15). A CMV is a special bid offering. Therefore, it is NOT generally announced.

- The MTM portion of the machine label is the 4-digit MT and 3-digit model, where model = “CTO” (Example: 1829-CTO). The PRODUCT ID portion of the machine label is the 4-digit MT and 3-digit CMV model (Example: 1829-W15).
- The PEW record is the 4-digit MT and 3-digit model, where model = “CTO” (Example: 1829-CTO).
- eSupport will show both the CTO and CMV machine type models (Example: 1829-CTO and 1829-W15 will be found on the eSupport site.)
- The HMM will have the 4-digit MT and 3-digit CTO model only (Example: 1829-CTO). Again, CMVs are custom models and are not found in the HMM.

General Announce Variant (GAV)

This is a standard model (fixed configuration). GAVs are announced and offered to all customers. The MTM portion of the machine label is a 4-digit MT and 3-digit model, where model = a “fixed part number”, not “CTO” (Example: 1829-F1U). Also, PEW, eSupport, and the HMM will list these products under the same fixed model number.

FRU identification for CTO, CMV, and GAV products

There are three information resources to identify which FRUs are used to support CTO, CMV, and GAV products. These sources are PEW, eSupport, and the HMM.

Using PEW

- **PEW** is the primary source for identifying FRU part numbers and FRU descriptions for the key commodities for CTO, CMV and GAV products at a MT - serial number level. An example of key commodities are hard disk drives, system boards, microprocessors, Liquid Crystal Displays (LCDs), and memory.
- Remember, all CTO and CMV products are loaded in PEW under the 4-digit MT and 3-digit model, where model = “CTO” (Example: 1829-CTO). GAVs are loaded in PEW under the 4-digit MT and 3-digit model, where model = a “fixed part number”, not “CTO” (Example: 1829-F1U).
- PEW can be accessed at the following Web site:
  http://www.lenovo.com/support/site.wss/document.do?lndocid=LOOK-WARNTY
  Select Warranty lookup. Input the MT and the Serial number and the list of key commodities will be returned in the PEW record under COMPONENT INFORMATION.
- **Business Partners** using Eclaim will access PEW when performing Entitlement Lookup. Business Partners will enter Loc ID, MT and Serial, and the key commodities will be returned in the Eclaim record under SYSTEM DETAILS.

- Authorized IBM Business Partners can access Eclaim at the following Web site:
  https://wca.eclaim.com

Using eSupport

For Key Commodities (Examples - hard disk drive, system board, microprocessor, LCD, and memory)

- eSupport can be used to view the list of key commodities built in a particular machine serial (this is the same record found in PEW).
- eSupport can be accessed at the following Web site:
  http://www.lenovo.com/support
- To view the key commodities, click **Download & Drivers**. And then click **Parts information**. After that click **Parts lookup**. Type in the model type and serial number. The key commodities will be returned in the eSupport record under **Parts shipped with your system**.

For the Remaining FRUs (the complete list of FRUs at the MT Model level)

- eSupport can be used to view the complete list of FRUs for a machine type and model.
- To view the complete list of FRUs, type in the machine type and model (Example: 1829-CTO) under **Quick path**. Under “View by Document Type” select **Parts information**. Under “Filter by Category” select **Service parts**. Under “Parts Information by Date” select **System service parts**. The list of service parts by description, with applicable machine type model and FRU will be displayed.

Using the HMM

For Key Commodities (Examples - hard disk drive, system board, microprocessor, LCD, and memory)

Use the HMM as a back-up to PEW and eSupport to view the complete list of FRUs at the MT Model level.

Chapter 3. General checkout

This chapter presents following information:

- "What to do first" on page 28
- "Checkout guide" on page 29
  - "Diagnostics using PC-Doctor for DOS" on page 29
  - "Lenovo ThinkVantage Toolbox" on page 31
  - "FRU tests" on page 33
- "Power system checkout" on page 35

The descriptions in this chapter apply to any ThinkPad model that supports the PC-Doctor® for DOS diagnostics program. Some descriptions might not apply to your particular computer.

Before you go to the checkout guide, be sure to read the following important notes.

Important notes:

- **Only certified trained personnel should service the computer.**
- **Before replacing any FRU, read the entire page on removing and replacing FRUs.**
- **When you replace FRUs, use new nylon-coated screws.**
- **Be extremely careful during such write operations as copying, saving, or formatting.** Drives in the computer that you are servicing sequence might have been altered. If you select an incorrect drive, data or programs might be overwritten.
- **Replace a FRU only with another FRU of the correct model.** When you replace a FRU, make sure that the model of the machine and the FRU part number are correct by referring to the FRU parts list.
- **A FRU should not be replaced because of a single, unreproducible failure.** Single failures can occur for a variety of reasons that have nothing to do with a hardware defect, such as cosmic radiation, electrostatic discharge, or software errors. Consider replacing a FRU only when a problem recurs. If you suspect that a FRU is defective, clear the error log and run the test again. If the error does not recur, do not replace the FRU.
- **Be careful not to replace a nondefective FRU.**

© Copyright Lenovo 2011

What to do first

When you do return a FRU, you must include the following information in the parts exchange form or parts return form that you attach to it:

1. Name and phone number of service technician
2. Date of service
3. Date on which the machine failed
4. Date of purchase
5. Failure symptoms, error codes appearing on the display, and beep symptoms
6. Procedure index and page number in which the failing FRU was detected
7. Failing FRU name and part number
8. Machine type, model number, and serial number
9. Customer's name and address

Note: During the warranty period, the customer may be responsible for repair costs if the computer damage was caused by misuse, accident, modification, unsuitable physical or operating environment, or improper maintenance by the customer. Following is a list of some common items that are not covered under warranty and some symptoms that might indicate that the system was subjected to stress beyond normal use.

Before checking problems with the computer, determine whether the damage is covered under the warranty by referring to the following list:

The following are not covered under warranty:

- LCD panel cracked from the application of excessive force or from being dropped
- Scratched (cosmetic) parts
- Distortion, deformation, or discoloration of the cosmetic parts
- Plastic parts, latches, pins, or connectors that have been cracked or broken by excessive force
- Damage caused by liquid spilled into the system
- Damage caused by the improper insertion of a PC Card or the installation of an incompatible card
- Improper disc insertion or use of an optical drive
- Diskette drive damage caused by pressure on the diskette drive cover, foreign material in the drive, or the insertion of a diskette with multiple labels
- Damaged or bent diskette eject button
- Fuses blown by attachment of a nonsupported device
- Forgotten computer password (making the computer unusable)
- Sticky keys caused by spilling a liquid onto the keyboard
- Use of an incorrect ac power adapter on laptop products

The following symptoms might indicate damage caused by nonwarranted activities:

- Missing parts might be a symptom of unauthorized service or modification.
- If the spindle of a hard disk drive becomes noisy, it may have been subjected to excessive force, or dropped.

Checkout guide

Use the following procedures as a guide in identifying and correcting problems with the ThinkPad Notebook.

Note: The diagnostic tests are intended to test only ThinkPad products. The use of non-ThinkPad products, prototype cards, or modified options can lead to false indications of errors and invalid system responses.

1. Identify the failing symptoms in as much detail as possible.
2. Verify the symptoms. Try to re-create the failure by running the diagnostic test or by repeating the operation.

Diagnostics using PC-Doctor for DOS

The ThinkPad Notebook has a test program called PC-Doctor for DOS (hereafter called *PC-Doctor*.) You can detect errors by running the diagnostics test included in PC-Doctor.

Note: PC-Doctor for DOS is available at the following Web site:
http://www.lenovo.com/support

To create the PC-Doctor diagnostic CD, follow the instructions on the Web site.

For some possible configurations of the computer, PC-Doctor might not run correctly. To avoid this problem, you need to initialize the computer setup by use of the ThinkPad Setup Utility before you run PC-Doctor.

To enter ThinkPad Setup Utility, do as follows:

1. Turn on the computer.
2. When the ThinkPad logo comes up, immediately press F1 to enter the ThinkPad Setup Utility.

Note: If a supervisor password has been set by the customer, ThinkPad Setup Utility menu appears after the password is entered. You can start the utility by pressing Enter instead of entering the supervisor password; however, you cannot change the parameters that are protected by the supervisor password.

On the ThinkPad Setup Utility screen, press F9, Enter, F10, and then Enter.

Note: When you initialize the computer configuration, some devices are disabled, such as the serial port. If you test one of these devices, you will need to enable it by using Configuration utility for DOS. The utility is available on the following Web site:
http://www.lenovo.com/support

PC-Doctor cannot be used to test a device that is in the docking station, even if the computer supports the docking station. To test a USB device, connect it to the USB connector of the computer.

Testing the computer

Note: The PC-Doctor diagnostic CD does not support any optical drives connected through USB devices or any others. It supports only the internal optical drive of the ThinkPad Notebook.

To run the test, do as follows:

1. Turn off the computer.
2. Make sure that the internal optical drive that is supported as a startup device is attached to the computer.
3. Turn on the computer. If the computer cannot be powered on, go to “Power system checkout” on page 35, and check the power sources.

   If an error code appears, go to “Symptom-to-FRU index” on page 45.
4. When the ThinkPad logo comes up, immediately press F12 to enter the Boot Menu.

5. Insert the PC-Doctor CD into the internal optical drive.
6. Press cursor keys to select **ATAPI CDx** (x: 0, 1, ...) and then press Enter.
7. Follow the instructions on the screen.
8. The main panel of PC-Doctor appears.
9. Select **Diagnostics** with the arrow keys, and press Enter.

   Note: You can select an item not only with the arrow keys, but also with the TrackPoint® pointer. Instead of pressing Enter, click the left button.

   A pull-down menu appears. (Its exact form depends on the model.)

   Note: PC-Doctor menu does not mean the formal support device list. Some unsupported device names may appear in the PC-Doctor menu.

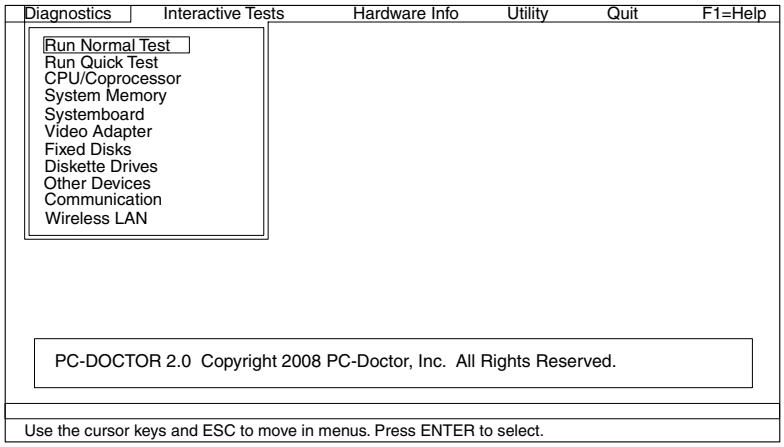

   The options on the test menu are as follows:

Diagnostics	Interactive Tests
• Run Normal Test • Run Quick Test • CPU/Coprocessor • System board • Video Adapter • Fixed Disks • Diskette Drives • Other Devices • ThinkPad Devices • Communication • Wireless LAN • Advanced Memory Tests	• Keyboard • Video • Internal Speaker • Mouse • Diskette • System Load • Optical Drive Test • Intel WLAN Radio Test
Notes: • In the **Keyboard** test in **Interactive Tests**, the Fn key should be held down for at least 2 seconds; otherwise, it cannot be sensed. • **Video Adapter** test supports only the LCD display on the ThinkPad Notebook. If you have an external monitor attached to your computer, detach it before running PC-Doctor for DOS. • To test **Digital Signature Chip**, the security chip must be set to Active.	

10. Run the applicable function test.
11. Follow the instructions on the screen. If there is a problem, PC-Doctor shows messages describing it.
12. To exit the test, select **Quit — Exit Diag**. To cancel the test, press Esc.

Note: After running PC-Doctor, check the time and date on the system and reset them if they are incorrect.

Detecting system information with PC-Doctor

PC-Doctor can detect the following system information:

Hardware Info

- System Configuration
- Memory Contents
- Physical Disk Drives
- Logical Disk Drives
- VGA Information
- IDE Drive Info
- PCI Information
- PNPISA Info
- SMBIOS Info
- VESA LCD Info
- Hardware Events Log

Utility

- Run External Tests
- Surface Scan Hard Disk
- Benchmark System
- DOS Shell
- Tech Support Form
- Battery Rundown
- View Test Log
- Print Log
- Save Log
- Full Erase Hard Drive
- Quick Erase Hard Drive

Lenovo ThinkVantage Toolbox

Lenovo ThinkVantage® Toolbox is a diagnostic program that works through the Windows operating system. It enables you to view symptoms of computer problems and solutions for them, and includes automatic notification when action is required, computing assistance, advanced diagnostics, and diagnostic history.

Notes:

- The latest Lenovo ThinkVantage Toolbox is available at the following Web site: http://web.lenovothinkvantagetoolbox.com/
- To install the latest Lenovo ThinkVantage Toolbox on the computer, click **Download Lenovo ThinkVantage Toolbox**, and then follow the instructions on the Web site.

To run this program, do as follows:

Windows 7:
While the Windows operating system is running, press the ThinkVantage button.

To start this program, do the following:

- Click **Start → Control Panel → System and Security → Lenovo's System Health and Diagnostics**.

Windows Vista and Windows XP:
Click **Start → All Programs → ThinkVantage → Lenovo ThinkVantage Toolbox**

Follow the instructions on the screen. Lenovo ThinkVantageToolbox also has problem determination aids that determine software and usage problems.

For additional information about this program, see the Help for the program.

FRU tests

The following table shows the test for each FRU.

Table 1. FRU tests

FRU	Applicable test
System board	1. **Diagnostics → CPU/Coprocessor** 2. **Diagnostics → Systemboard** 3. If the docking station or the port replicator is attached to the ThinkPad Notebook, detach it. 4. Place the computer on a horizontal surface, and run **Diagnostics → ThinkPad Devices → HDD Active Protection Test**. **Note:** Do not apply any physical shock to the computer while the test is running.
Power	**Diagnostics → ThinkPad Devices → ac power adapter, Battery 1 (Battery2)**
LCD unit	1. **Diagnostics → Video Adapter** 2. **Interactive Tests → Video**
Audio	Enter the ThinkPad Setup Utility and change Serial ATA (SATA) setting to **Compatibility**, and run **Diagnostics → Other Device → Conexant Audio**.
Speaker	**Interactive Tests → Internal Speaker** **Note:** Once Audio test is done, the no sound is heard this test. In this case, turn off and turn on the computer. Then, run this test again.
Keyboard	1. **Diagnostics → Systemboard → Keyboard** 2. **Interactive Tests → Keyboard**
Hard disk drive or solid state drive	Enter the ThinkPad Setup Utility and change Serial ATA (SATA) setting to **Compatibility**, and run **Diagnostics → Fixed Disks**.
	You can also diagnose the drive without starting up the operating system. To diagnose the drive from the ThinkPad Setup Utility, do as follows: 1. Remove any diskette from the diskette drive, and then turn off the computer. 2. Turn on the computer. 3. While the message, “To interrupt normal startup, press the blue ThinkVangate button,” is displayed at the lower left of the screen, press F1 to enter the ThinkPad Setup Utility. 4. Using cursor keys, select **HDD diagnostic program**. Press enter. 5. Using cursor keys, select **Main hard disk drive** or **Ultrabay hard disk drive**. 6. Press Enter to start the diagnostic program.
Diskette drive	1. **Diagnostics → Diskette Drives** 2. **Interactive Tests → Diskette**
Optical drive	1. **Diagnostics → Other Devices → Optical Drive** 2. **Interactive Tests → Optical Drive Test**
Memory	1. If two DIMMs are installed, remove one of them and run **Diagnostics → System Memory**. 2. If the problem does not recur, return the DIMM to its place, remove the other one, and run the test again.

Table 1. FRU tests (continued)

FRU	Applicable test
TrackPoint or pointing device	If the TrackPoint does not work, check the configuration as specified in the ThinkPad Setup Utility. If the TrackPoint is disabled, select **Automatic** to enable it. After you use the TrackPoint, the pointer may drift on the screen for a short time. This drift can occur when a slight, steady pressure is applied to the TrackPoint pointer. This symptom is not a hardware problem. If the pointer stops after a short time, no service action is necessary. If enabling theTrackPoint does not correct the problem, continue with the following: • **Interactive Tests → Mouse**
Touch Pad	If the Touch Pad does not work, check the configuration as specified in the ThinkPad Setup Utility. If the Touch Pad is disabled, select **Automatic** to enable it. If enabling the Touch Pad does not correct the problem, continue with the following: • **Interactive Tests → Mouse**

Power system checkout

To verify a symptom, do the following:
1. Turn off the computer.
2. Remove the battery pack.
3. Connect the ac power adapter.
4. Check that power is supplied when you turn on the computer.
5. Turn off the computer.
6. Disconnect the ac power adapter and install the charged battery pack.
7. Check that the battery pack supplies power when you turn on the computer.

If you suspect a power problem, see the appropriate one of the following power supply checkouts:
- “Checking the ac power adapter” on page 35
- “Checking operational charging” on page 35
- “Checking the battery pack” on page 36
- “Checking the backup battery” on page 36

Checking the ac power adapter

You are here because the computer fails only when the ac power adapter is used.

- If the power problem occurs only when the docking station or the port replicator is used, replace the docking station or the port replicator.
- If the power-on indicator does not turn on, check the power cord of the ac power adapter for correct continuity and installation.
- If the computer does not charge during operation, go to “Checking operational charging” on page 35.

To check the ac power adapter, do the following:
1. Unplug the ac power adapter cable from the computer.
2. Measure the output voltage at the plug of the ac power adapter cable. See the following figure:

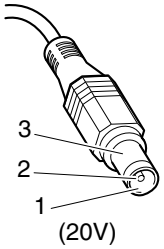

Pin	Voltage (V dc)
1	+20
2	0
3	Ground

   Note: Output voltage of pin no.2 of the ac power adapter may different from the one you are servicing.
3. If the voltage is not correct, replace the ac power adapter.
4. If the voltage is acceptable, do the following:
   - Replace the system board.
   - If the problem persists, go to “FRU tests” on page 33.

Note: Noise from the ac power adapter does not always indicate a defect.

Checking operational charging

To check whether the battery charges properly during operation, use a discharged battery pack or a battery pack that has less than 50% of the total power remaining when installed in the computer.

Perform operational charging. If the battery status indicator or icon does not turn on, remove the battery pack and let it return to room temperature. Reinstall the battery pack. If the charge indicator or icon still does not turn on, replace the battery pack.

If the charge indicator still does not turn on, replace the system board. Then reinstall the battery pack. If it is still not charged, go to the next section.

Checking the battery pack

Battery charging does not start until the Power Manager Battery Gauge shows that less than 96% of the total power remains; under this condition the battery pack can charge to 100% of its capacity. This protects the battery pack from being overcharged or from having a shortened life.

To check your battery, move your cursor to the Power Manager Battery Gauge icon in the icon tray of the Windows taskbar and wait for a moment (but do not click), and the percentage of battery power remaining is displayed. To get detailed information about the battery, double-click the Power Manager Battery Gauge icon.

Note: If the battery pack becomes hot, it may not be able to charge. Remove it from the computer and leave it at room temperature for a while. After it cools down, reinstall and recharge it.

To check the battery pack, do the following:

1. Power off the computer.
2. Remove the battery pack and measure the voltage between battery terminals 1 (+) and 7 (-). See the following figure:

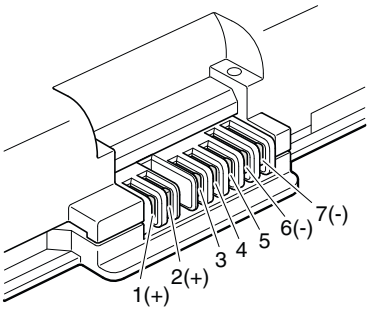

Terminal	Voltage (V dc)
1	+ 0 to + 16.8
7	Ground (-)

3. If the voltage is less than +11.0 V dc, the battery pack has been discharged.

   Note: Recharging will take at least 3 hours, even if the indicator does not turn on.

   If the voltage is still less than +11.0 V dc after recharging, replace the battery.
4. If the voltage is more than +11.0 V dc, measure the resistance between battery terminals 5 and 7. The resistance must be 4 to 30 K Ω. If the resistance is not correct, replace the battery pack. If the resistance is correct, replace the system board.

Checking the backup battery

Do the following:

1. Power off the computer, and unplug the ac power adapter from it.
2. Turn the computer upside down.
3. Remove the battery pack (see “1010 Battery pack” on page 65).
4. Remove the backup battery (see “1100 Backup battery” on page 82).
5. Measure the voltage of the backup battery. See the following figure.

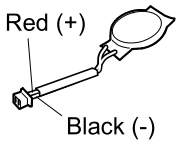

Wire	Voltage (V dc)
Red	+2.5 to +3.2
Black	Ground

- If the voltage is correct, replace the system board.
- If the voltage is not correct, replace the backup battery.
- If the backup battery discharges quickly after replacement, replace the system board.

Chapter 4. Related service information

This chapter presents following information:

- “Restoring the factory contents by using Recovery Disc Set” on page 39
- “Passwords” on page 40
- “Power management” on page 43
- “Symptom-to-FRU index” on page 45

Service Web site:

When the latest maintenance diskette and the system program service diskette become available, they will be posted on
http://www.lenovo.com/spm.

Restoring the factory contents by using Recovery Disc Set

When the hard disk drive (HDD) or solid state drive (SSD) is replaced because of a failure, no product recovery program is on the new drive. In this case, you must use the Recovery Disc Set for the computer. Order the Recovery Disc Set and the drive at the same time so that you can recover the new drive with the pre-installed software when they arrive. For information on which discs to order, see “Recovery discs” on page 172.

The recovery disc set consists of the user instructions and the following set of DVDs to restore the computer to the original factory configuration.

Operating System Recovery Disc (one disc)	This disc restores the Microsoft® Windows operating system. Use this disc to start the recovery process.
Applications and Drivers Recovery Disc (one or more discs)	This disc restores the preinstalled applications and drivers on the computer.
Supplemental Recovery Disc	This disc contains additional content, such as updates to the software that was preinstalled on the computer. Not all recovery disc sets come with a *Supplemental Recovery Disc*.

Notes:

- You must have a DVD drive to use the recovery discs. If you do not have an internal DVD drive, you can use an external USB DVD drive.
- During the recovery process, all data on the drive will be deleted. If possible, copy any important data or personal files that you want to keep onto removable media or a network drive before you start the recovery process.

To restore the computer to the original factory configuration using the recovery disc set, do the following:

Note: Recovery takes several hours. The length of time depends on the method you use. If you use recovery discs, recovery takes at least five hours.

1. Make the CD/DVD drive the first startup device in the startup sequence using the following procedure:
   a. Press and hold down the F1 key, and then turn on the computer. When the logo screen is displayed or if you hear repeating beeps, release the F1 key. The Setup Utility program opens.
   b. Use the arrow keys to select **Startup → Boot**.
   c. Select the CD/DVD drive as the **1st Boot Device**.

© Copyright Lenovo 2011

2. Insert the *Operating System Recovery Disc* into the DVD drive.
3. Press F10 to save the Setup Utility configuration changes. Follow the instructions on the screen to begin the recovery process.
4. Select your language and click **Next**.
5. Read the license. If you agree with the terms and conditions, select **I accept these terms and conditions** and then click **Next**. If you do not agree with the terms and conditions, follow the instructions on the screen.
6. Click **Yes** in the displayed window to begin the operating system recovery process.
7. Insert the *Applications and Drivers Recovery Disc* when prompted and then click **OK** to begin the applications and drivers recovery process.
8. If you have a *Supplemental Recovery Disc*, insert it when prompted and click **Yes**. If you do not have a *Supplemental Recovery Disc*, click **No**.
9. When all of the data has been copied from the last disc in the set and has been processed, remove the disc and restart the computer.

   Note: The rest of the recovery process is fully automated and no action is required by you. The computer will restart into the Microsoft Windows desktop several times and you might experience periods when no activity is apparent on the screen for several minutes at a time. This is normal.
10. When the recovery process is complete, the Set Up Windows screen is displayed. Follow the instructions on the screen to complete the Windows setup.
11. After you have completed the Windows setup, you might want to restore the original startup sequence. Start the Setup Utility program and then press F9 to restore the default settings. Press F10 to save and exit the Setup Utility.

Note: After restoring a drive to the factory default settings, you might need to reinstall some device drivers.

Passwords

As many as three passwords may be needed for any ThinkPad Notebook: the power-on password (POP), the hard-disk password (HDP), and the supervisor password (SVP).

If any of these passwords has been set, a prompt for it appears on the screen whenever the computer is turned on. The computer does not start until the password is entered.

Note: If only an SVP is installed, the password prompt does not appear when the operating system is booted.

Power-on password

A power-on password (POP) protects the system from being powered on by an unauthorized person. The password must be entered before an operating system can be booted. For how to remove the POP, see “How to remove the power-on password” on page 41.

Hard-disk password

There are two hard-disk passwords (HDPs):

- User HDP—for the user
- Master HDP—for the system administrator, who can use it to get access to the hard disk even if the user has changed the user HDP

Note: There are two modes for the HDP: **User only** and **Master + User**. The **Master + User** mode requires two HDPs; the system administrator enters both in the same operation. The system administrator then provides the user HDP to the system user.

Attention: If the user HDP has been forgotten, check whether a master HDP has been set. If it has, it can be used for access to the hard disk drive. If no master HDP is available, neither Lenovo nor Lenovo authorized service technicians provide any services to reset either the user or the master HDP, or to recover data from the hard disk drive. The hard disk drive can be replaced for a scheduled fee.

For how to remove the POP, see “How to remove the hard-disk password” on page 41.

Supervisor password

A supervisor password (SVP) protects the system information stored in the ThinkPad Setup Utility. The user must enter the SVP in order to get access to the ThinkPad Setup Utility and change the system configuration.

Attention: If the SVP has been forgotten and cannot be made available to the service technician, there is no service procedure to reset the password. The system board must be replaced for a scheduled fee.

How to remove the power-on password

To remove a POP that you have forgotten, do the following:

(A) If no SVP has been set:

1. Turn off the computer.
2. Remove the battery pack. For how to remove the battery pack, see “1010 Battery pack” on page 65.
3. Remove the backup battery. For how to remove the backup battery, see “1100 Backup battery” on page 82.
4. Turn on the computer and wait until the POST ends. After the POST ends, the password prompt does not appear. The POP has been removed.
5. Reinstall the backup battery and the battery pack.

(B) If an SVP has been set and is known by the service technician:

1. Turn on the computer.
2. When the ThinkPad logo comes up, immediately press F1 to enter ThinkPad Setup. When the POP icon is appearing on the screen, enter the POP.
3. Select **Security**, using the cursor directional keys to move the menu.
4. Select **Password**.
5. Select **Power-On Password**.
6. Type the current SVP in the **Enter Current Password** field. then leave the **Enter New Password** field blank, and press Enter twice.
7. In the Changes have been saved window, press Enter.
8. Press F10; then, in the Setup confirmation window, select **Yes**.

How to remove the hard-disk password

Attention: If **User only** mode is selected and the user HDP has been forgotten and cannot be made available to the service technician, neither Lenovo nor Lenovo authorized service technicians provide any services to reset the user HDPs or to recover data from the hard disk drive. The hard disk drive can be replaced for a scheduled fee.

To remove a user HDP that has been forgotten, when the SVP and the master HDP are known, do the following:

1. Turn on the computer.
2. When the ThinkPad logo comes up, immediately press F1 to enter ThinkPad Setup. When the POP icon is appearing on the screen, enter the POP.

3. Select **Security**, using the cursor directional keys to move the menu.
4. Select **Password**.
5. Select **Hard-disk *x* password**, where *x* is the letter of the hard disk drive. A pop-up window opens.
6. Select **Master HDP**.
7. Type the current master HDP in the **Enter Current Password** field. then leave the **Enter New Password** field blank, and press Enter twice.
8. Press F10.
9. Select **Yes** in the Setup Configuration window. Both user HDP and master HDP will have been removed.

Power management

To reduce power consumption, the computer has three power management modes: screen blank, sleep (standby in Windows XP), and hibernation.

Screen blank mode

If the time set on the “Turn off monitor” timer in the operating system expires, the LCD backlight turns off.

To put the computer into screen blank mode, do as follows:

1. Press Fn+F3. A panel for selecting a power plan (in Windows XP, power scheme) appears.
2. Select **Power off display (keep current power plan)** (in Windows XP, **keep current power scheme**).

You can also put the computer into screen blank mode, press ThinkVantage button and use the ThinkVantage Productivity Center.

Note: If the computer is a Windows 7 model, it does not support ThinkVantage Productivity Center.

To end screen blank mode and resume normal operation, press any key.

Sleep (standby) mode

When the computer enters sleep (standby) mode, the following events occur in addition to what occurs in screen blank mode:

- The LCD is powered off.
- The hard disk drive is powered off.
- The CPU stops.

To enter sleep (standby) mode, press Fn+F4.

Note: You can change the action of the Fn+F4 key combination by changing the settings in Power Manager.

In certain circumstances, the computer goes into sleep (standby) mode automatically:

- If a “suspend time” has been set on the timer, and the user does not do any operation with the keyboard, the TrackPoint, the hard disk, the parallel connector, or the diskette drive within that time.
- If the battery indicator blinks orange, indicating that the battery power is low.

Note: Even if you do not set the low-battery alarm, the charge indicator notifies you when the battery is low, and then the computer enters the power-saving mode automatically.

To cause the computer to return from sleep (standby) mode and resume operation, do one of the following:

- Press the Fn key.
- Open the LCD cover.
- Turn on the power switch.

Also, in either of the following events, the computer automatically returns from sleep (standby) mode and resumes operation:

- The ring indicator (RI) is signaled by a serial device or a PC Card device.
- The time set on the resume timer elapses.

  Note: The computer does not accept any input immediately after it enters sleep (standby) mode. Wait a few seconds before taking any action to reenter operation mode.

Hibernation mode

In hibernation mode, the following occurs:

- The system status, RAM, VRAM, and setup data are stored on the hard disk.
- The system is powered off.

Note: If the computer enters the hibernation mode while it is docked to the docking station, do not undock it before resuming normal operation. If you do undock it and then try to resume normal operation, you will get an error message, and you will have to restart the system.

To cause the computer to enter hibernation mode, do any of the following:

- Press the Fn+F12 keys.
- If you have defined one of the following actions as the event that causes the system to go into hibernation mode, perform that action.
  - Closing the lid.
  - Pressing the power button.
  - Pressing Fn+F4 keys.

Also, the computer goes into hibernation mode automatically in either of the following conditions:

- If a “hibernation time” has been set on the timer, and if the user does not do any operation with the keyboard, the TrackPoint, the hard disk drive, the parallel connector, or the diskette drive within that time.
- If the timer conditions are satisfied in suspend mode.

When the power is turned on, the computer returns from hibernation mode and resumes operation. The hibernation file in the boot record on the hard disk drive is read, and system status is restored from the hard disk drive.

Symptom-to-FRU index

This section contains following information:

- “Numeric error codes” on page 45
- “Error messages” on page 47
- “Beep symptoms” on page 48
- “No-beep symptoms” on page 48
- “LCD-related symptoms” on page 49
- “Intermittent problems” on page 50
- “Undetermined problems” on page 50

The symptom-to-FRU index in this section lists symptoms and errors and their possible causes. The most likely cause is listed first, in boldface type.

Note: Do the FRU replacement or other actions in the sequence shown in the column headed “FRU or action, in sequence.” If replacing a FRU does not solve the problem, put the original part back in the computer. Do not replace a nondefective FRU.

This index can also help you determine, during regular servicing, what FRUs are likely to need to be replaced next.

A numeric error is displayed for each error detected in POST or system operation. In the displays, **n** can be any number.

If no numeric code is displayed, check the narrative descriptions of symptoms. If the symptom is not described there, go to “Intermittent problems” on page 50.

Note: For a device not supported by diagnostic codes in the ThinkPad Notebooks, see the manual for that device.

Numeric error codes

Table 2. Numeric error codes

Symptom or error	FRU or action, in sequence
0177 Bad SVP data, stop POST task—The checksum of the supervisor password in the EEPROM is not correct.	**System board.**
0182 Bad CRC2. Enter BIOS Setup and load Setup defaults.—The checksum of the CRS2 setting in the EEPROM is not correct.	1. **Run ThinkPad Setup Utility. Press F9, and Enter to load the default setting. Then save the current setting by pressing F10.** 2. System board.
0183 Bad CRC of Security Settings in EFI Variable. Enter ThinkPad Setup.	
0187 EAIA data access error—The access to EEPROM is failed.	**System board.**
0188 Invalid RFID Serialization Information Area.	**System board.**
0189 Invalid RFID configuration information area—The EEPROM checksum is not correct.	**System board.**
0190 Critical low-battery error	1. **Charge the battery pack.** 2. Battery pack.

Table 2. Numeric error codes (continued)

Symptom or error	FRU or action, in sequence
0191 System Security—Invalid Remote Change requested.	1. **Run ThinkPad Setup Utility, and then save current setting by pressing F10.** 2. System board.
0199 System Security— Security password retry count exceeded.	1. **Run ThinkPad Setup Utility, and then save the current setting by pressing F10.** 2. System board.
0251 System CMOS checksum bad— Default configuration used.	1. **Charge the backup battery for more than 8 hours by connecting the ac power adapter.** 2. Replace the backup battery and run ThinkPad Setup Utility to reset the time and date.
0271 Real-time clock error. Check date and time settings.	**Run ThinkPad Setup Utility to reset the time and date.**
1802 Unauthorized network card is plugged in—Turn off and remove the miniPCI network card.	1. **Remove Mini PCI network card.** 2. System board.
1820 More than one external fingerprint reader is attached. Power off and remove all but the reader that you set up within your main operating system.	**Remove all but the reader that you set up for the authentication.**
2000 Hard Drive Active Protection sensor diagnostics failed.Press <Esc> to continue.Press <F1> to enter SETUP	1. Undock docking station or port replicator if it is attached to the ThinkPad Notebook. 2. Place the ThinkPad Notebook on a horizontal surface. Do not apply any physical shock to the computer. 3. Run **Diagnostics → ThinkPad Devices → HDD Active Protection Test**.
2100 Detection error on HDD0 (Main HDD)	1. **Reseat the hard disk drive.** 2. Main hard disk drive. 3. System board.
2101 Detection error on HDD1 (Ultrabay HDD)	1. **Reseat the hard disk drive.** 2. Ultrabay hard disk drive. 3. System board.
2102 Detection error on HDD2 (Mini SATA)	1. **Reseat the Mini SATA device.** 2. Mini SATA device. 3. System board.
2110 Read error on HDD0 (Main HDD)	1. **Reseat the hard disk drive.** 2. Main hard disk drive. 3. System board.
2111 Read error on HDD1 (Ultrabay HDD)	1. **Reseat the hard disk drive.** 2. Ultrabay hard disk drive. 3. System board.
2112 Read error on HDD2 (Mini SATA)	1. **Reseat the Mini SATA device.** 2. Mini SATA device. 3. System board.
2200 Machine Type and Serial Number are invalid.	**System board.**
2201 Machine UUID is invalid	**System board.**

Error messages

Table 3. Error messages

Symptom or error	FRU or action, in sequence
Fan error.	1. **Fan**. 2. Thermal grease. 3. System board.
Thermal sensing error.	**System board**.
This system does not support batteries that are not genuine Lenovo-made or authorized. This system will continue to boot, but may not charge unauthorized batteries. **Attention:** Lenovo has no responsibility for the performance or safety of unauthorized batteries, and provides no warranties for failures or damage arising out of their use.	**Replace the battery**.

Beep symptoms

Table 4. Beep symptoms

Symptom or error	FRU or action, in sequence
One beep and a blank, unreadable, or flashing LCD.	1. **Reseat the LCD connector**. 2. LCD assembly. 3. External CRT. 4. System board.
One long and two short beeps, and a blank or unreadable LCD.	1. **System board**. 2. LCD assembly. 3. DIMM.
Two short beeps with error codes.	**POST error. See "Numeric error codes" on page 45.**
Two short beeps and a blank screen.	1. **System board**. 2. DIMM.
Two or more beeps, or a continuous beep. Operating system starts successfully.	If a mini-PCI Ethernet card is installed, confirm that **Alert On LAN 2** in ThinkPad Setup Utility is **disabled**.
Three short beeps, pause, three more short beeps, and one short beep.	1. **DIMM**. 2. System board.
One short beep, pause, three short beeps, pause, three more short beeps, and one short beep.	
Only the cursor appears.	**Reinstall the operating system**.
Four cycles of four short beeps and a blank screen.	**System board** (security chip)
Five short beeps and a blank screen.	**System board**

No-beep symptoms

Table 5. No-beep symptoms

Symptom or error	FRU or action, in sequence
No beep, power-on indicator on, LCD blank, and no POST.	1. **Make sure that every connector is connected tightly and correctly**. 2. DIMM. 3. System board.
No beep, power-on indicator on, and LCD blank during POST.	1. **Reseat DIMM**. 2. System board.
The power-on password prompt appears.	A power-on password or a supervisor password is set. Type the password and press **Enter**.
The hard-disk password prompt appears.	A hard-disk password is set. Type the password and press **Enter**.

LCD-related symptoms

Important: The TFT LCD for the notebook computer contains many thin-film transistors (TFTs). The presence of a small number of dots that are missing, discolored, or always lighted is characteristic of TFT LCD technology, but excessive pixel problems can cause viewing concerns.

If the LCD you are servicing has two or less visible defective pixels, it should not be considered faulty. However, if the LCD has three or more visible defective pixels, it will be deemed as defective by Lenovo and it should be replaced.

Notes:

- This policy applies to all ThinkPad Notebooks purchased on 1 January, 2008 or later.
- Lenovo will not provide replacement if the LCD is within specification as we cannot guarantee that any replacement LCD will have zero pixel defects.
- One pixel consists of R, G, B sub-pixels.

Table 6. LCD-related symptoms

Symptom or error	FRU or action, in sequence
No beep, power-on indicator on, and a blank LCD during POST.	**System board**.
• LCD backlight not working. • LCD too dark. • LCD brightness cannot be adjusted. • LCD contrast cannot be adjusted.	1. **Reseat the LCD connectors**. 2. LCD assembly. 3. System board.
• LCD screen unreadable. • Characters missing pixels. • Screen abnormal. • Wrong color displayed.	1. **See important note for "LCD-related symptoms."** 2. Reseat all LCD connectors. 3. LCD assembly. 4. System board.
Horizontal or vertical lines displayed on LCD.	**LCD assembly**.

Intermittent problems

Intermittent system hang problems can be due to a variety of causes that have nothing to do with a hardware defect, such as cosmic radiation, electrostatic discharge, or software errors. FRU replacement should be considered only when a problem recurs.

When analyzing an intermittent problem, do the following:

1. Run the diagnostic test for the system board in loop mode **at least 10 times**.
2. If no error is detected, do **not** replace any FRUs.
3. If any error is detected, replace the FRU shown by the FRU code. Rerun the test to verify that no more errors exist.

Undetermined problems

If the diagnostic tests did not identify the adapter or device that has failed, if wrong devices are installed, or if the system simply is not operating, follow these procedures to isolate the failing FRU (do not isolate FRUs that have no defects).

Verify that all attached devices are supported by the computer.

Verify that the power supply being used at the time of the failure is operating correctly. (See “Power system checkout” on page 35.)

1. Turn off the computer.
2. Visually check each FRU for damage. Replace any damaged FRU.
3. Remove or disconnect all of the following devices:
   a. Non-ThinkPad devices
   b. Devices attached to the docking station or the port replicator
   c. Printer, mouse, and other external devices
   d. Battery pack
   e. Hard disk drive
   f. External diskette drive or optical drive
   g. DIMM
   h. Optical disk or diskette in the internal drive
   i. PC Cards
4. Turn on the computer.
5. Determine whether the problem has been solved.
6. If the problem does not recur, reconnect the removed devices one at a time until you find the failing FRU.
7. If the problem remains, replace the following FRUs one at a time (do not replace a nondefective FRU):
   a. System board
   b. LCD assembly

Chapter 5. Status indicators

This chapter presents the system status indicators that show the status of the computer.

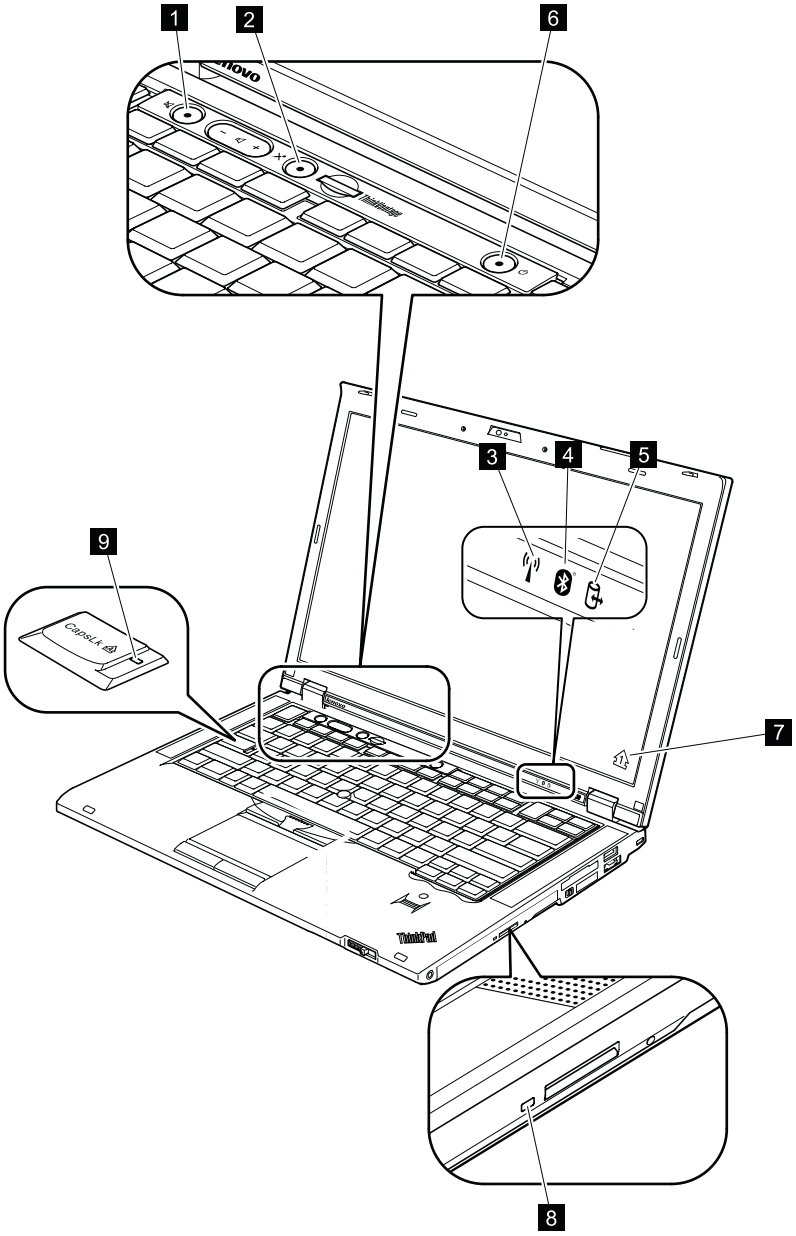

© Copyright Lenovo 2011

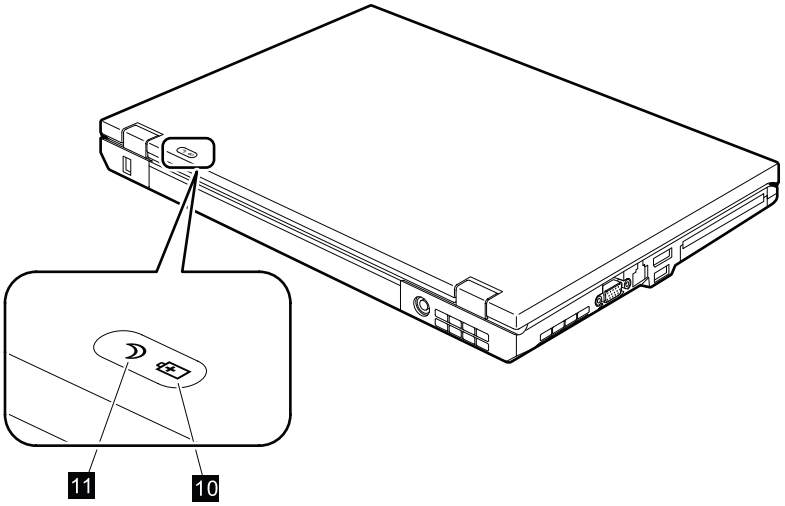

Table 7. Status indicators

Indicator	Meaning
1 Speaker mute	**Orange:** The speaker is on mute. To set the speakers on mute or unmute, press the speaker mute button.
2 Microphone mute	**Orange:** The microphone is on mute. None of the recording devices is available while the microphone mute is on by default.
3 Wireless LAN, Wireless WAN, or WiMAX status	**Green:** The wireless LAN feature (the IEEE 802.11 b/g standard, 802.11 a/b/g, or 802.11n), wireless WAN feature, or WiMax feature is on, and the radio link is ready for use. Data is being transmitted.
4 *Bluetooth* wireless or Wireless USB status	**Green:** The *Bluetooth* wireless feature is on, and the radio link is ready for use. Data is being transmitted.
5 Device access	**Green:** Data is being read from or written to the hard disk drive, the diskette drive, or the drive in the Serial Ultrabay Enhanced device. When this indicator is on, do not put the computer into sleep (standby) mode or turn off the computer. **Note:** Do not move the system while the green device access light is on. Sudden physical shock could cause drive errors.

Table 7. Status indicators (continued)

Indicator	Meaning
6 Power on	**Green:** The computer is on and ready to use. This indicator stays lit around the power-on button whenever the computer is on and is not in sleep (standby) mode. **Note:** This indicator blinks when the computer is in sleep mode.
7 Numeric lock (On-screen indicator)	By default, when the numeric lock is on, the numeric lock indicator is displayed on the screen.
8 Serial Ultrabay Enhanced device status	**Green:** A Serial Ultrabay Enhanced device is installed and in use. **Blinking green:** A Serial Ultrabay Enhanced device is in the process of being detached. **Turn off:** A Serial Ultrabay Enhanced device is ready to be attached or detached.
9 Caps lock	**Green:** Caps Lock mode is enabled. To enable or disable Caps Lock mode, press the Caps Lock key.

Table 7. Status indicators (continued)

Indicator	Meaning
10 Battery status	**Green:** The battery charge level is 20% or higher. **Orange:** The battery charge level is between 5% and 20%. **Fast blinking orange:** The battery charge level is lower than 5% . **Slow blinking orange:** The battery is being charged. When it reaches 20%, the blinking color changes to green. **Slow blinking green:** The battery charge level is between 20% and 80%, and charging is continuing. When the battery reaches 80% charge, the battery status indicator stops blinking, but the charging may continue until the battery is 100% charged. **Note:** If the computer is operating on battery power, the battery status indicator does not work while the computer is turned off or is in sleep (standby) mode or hibernation mode. **Quick blinking orange:** An error occurred in the battery. **The battery status indicator blinks three times:** The ac power adapter is attached to the computer. **The battery status indicator is off:** The battery pack of the computer is fully charged or detached.
11 Sleep (standby for Windows XP) status	**Green:** The computer is in sleep (standby) mode. **Blinking green:** The computer is entering sleep (standby) mode or hibernation mode, or is resuming normal operation.

Chapter 6. Fn key combinations

The following table shows the function of each combination of Fn with a function key.

Table 8. Fn key combinations

Key combination	Description
Fn+F1	Reserved.
Fn+F2	Lock the computer.
Fn+F3	Select a power plan (in Windows XP, power scheme) that has been created by Power Manager, or adjust the power level by using the slider control. When you press this combination, a panel for selecting a power plan (power scheme) appears. **Notes:** To use this combination of the keys, ThinkPad PM device driver must have been installed on the computer. If you have logged on with an administrator user ID in Windows XP, and you press Fn+F3, the panel for selecting a power scheme appears. If you have logged on with another user ID in Windows XP, and you press Fn+F3, the panel does not appear.
Fn+F4	Put the computer in sleep (standby) mode. To return to normal operation, press the Fn key only, without pressing a function key. **Notes:** To use this combination of the keys, ThinkPad PM device driver must have been installed on the computer. If you want to use the combination to put the computer into hibernation mode or do-nothing mode (in Windows XP, shut the computer down or show the panel for turning off the computer), change the settings in the Power Manager.
Fn+F5	Enable or disable the built-in wireless networking features. If you press Fn+F5, a list of wireless features is displayed. You can quickly change the power state of each feature in the list. **Notes:** If you want to use Fn+F5 to enable or disable the wireless features, the following device drivers must be installed on the computer beforehand: • Power Management driver • OnScreen Display Utility • Wireless device drivers
Fn+F6	Change the camera and audio settings. When you press Fn+F6, the camera and audio setting window is opened and the camera preview is turned on. **Note:** The camera settings area only appears if the computer has an integrated camera.

© Copyright Lenovo 2011

Table 8. Fn key combinations (continued)

Key combination	Description
Fn+F7	Apply a presentation scheme directly, with no need to start Presentation Director. To disable this function and use the Fn+F7 key combination for switching a display output location, start Presentation Director, and change the settings. **Note:** If the computer is an Windows 7 model, it does not support presentation schemes, however the Fn+F7 combination might still be used to switch display output location. **For Windows 7:** Switch between the computer display and an external monitor. Windows will show these display options: • Computer display only (LCD) • Computer display and external monitor (same image) • Computer display and external monitor (extended desktop function) • External monitor only **Note:** To switch between the computer display and an external monitor, the Win+P key combination is also available. **For Windows Vista and Windows XP:** Switch between the computer display and an external monitor. If an external monitor is attached, computer output is displayed in the following three patterns by turns: • External monitor (CRT display) • Computer display and external monitor (LCD + CRT display • Computer display (LCD) **Notes:** This function is not supported if different desktop images are displayed on the computer display and the external monitor (the Extend desktop function). This function does not work while a DVD movie or a video clip is playing. To enable this function, start Presentation Director, and change the settings. **Note:** Multiple users can log on to a single operating system by using different user IDs. Each user needs to do the following: Click **Start → All Programs → ThinkVantage → Presentation Director**, and change the Fn+F7 settings.
Fn+F8	Change the settings of the UltraNav® pointing device.
Fn+F9	Reserved.
Fn+F10	Reserved.
Fn+F11	Reserved.
Fn+F12	Put the computer into hibernation mode. To return to normal operation, press the power button for less than four seconds. **Notes:** To use this combination of the keys, ThinkPad PM device driver must have been installed on the computer. Though the screen fades out immediately after Fn+F12 are pressed, the computer does not enter the hibernation mode immediately. Do not move the system until the sleep (standby) status indicator stops blinking. Moving the computer when it is entering hibernation might cause corruption of the hard disk drive.
Fn+PgUp	Turn the ThinkLight® on or off. **Note:** This function is supported only on the ThinkPad Notebooks that have the ThinkLight. The on or off status of the ThinkLight is shown on the screen for a few seconds when you press Fn+PgUp.

Table 8. Fn key combinations (continued)

Key combination	Description
Fn+Home	The computer display becomes brighter. The purpose of this method is to change the brightness level temporarily. On Windows Vista, the default brightness level is loaded after sleep (standby), hibernation, reboot, or detaching or attaching an ac power adapter. To change the default brightness level, change the settings of the Power Option in the Control Panel or use the Power Manager.
Fn+End	The computer display becomes dimmer. The purpose of this method is to change the brightness level temporarily. On Windows Vista, the default brightness level is loaded after sleep (standby), hibernation, reboot, or detaching or attaching an ac power adapter. To change the default brightness level, change the settings of the Power Option in the Control Panel or use the Power Manager.
Fn+Spacebar	Enable the Full Screen Magnifier function.
Fn+PrtSc	Have the same function as the SysRq key.
Fn+ScrLk	Enable or disable the numeric keypad. The indicator of numeric lock will be displayed on the screen.
Fn+Pause	Have the same function as the Break key.
Fn+cursor keys	These key combinations work with Windows Media Player. They have the following functions: • Fn + down arrow key: Play or Pause • Fn + up arrow key: Stop • Fn + right arrow key: Next Track • Fn + left arrow key: Previous Track

Chapter 7. FRU replacement notices

This chapter presents notices related to removing and replacing parts. Read this chapter carefully before replacing any FRU.

Screw notices

Loose screws can cause a reliability problem. In the ThinkPad Notebook, this problem is addressed with special nylon-coated screws that have the following characteristics:

- They maintain tight connections.
- They do not easily come loose, even with shock or vibration.
- They are harder to tighten.
- Each one should be used only once.

Do the following when you service this machine:

- Keep the screw kit (for the P/N, see “Miscellaneous parts” on page 167) in your tool bag.
- Always use new screws.
- Use a torque screwdriver if you have one.

Tighten screws as follows:

- **Plastic to plastic**

  Turn an additional **90 degrees** after the screw head touches the surface of the plastic part:

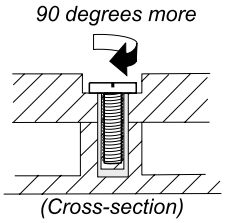

- **Logic card to plastic**

  Turn an additional **180 degrees** after the screw head touches the surface of the logic card:

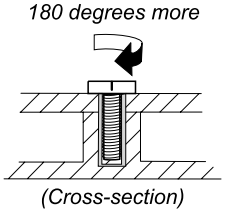

- **Torque driver**

  If you have a torque driver, refer to the “Torque” column for each step.
- Make sure that you use the correct screw. If you have a torque screwdriver, tighten all screws firmly to the torque shown in the table. **Never use a screw that you removed. Use a new one. Make sure that all of the screws are tightened firmly.**
- Ensure torque screw drivers are calibrated correctly following country specifications.

© Copyright Lenovo 2011

Retaining serial numbers

This section includes the following descriptions:

- “Restoring the serial number of the system unit” on page 60
- “Retaining the UUID” on page 60
- “Reading or writing the ECA information” on page 61

Restoring the serial number of the system unit

When the computer was manufactured, the EEPROM on the system board was loaded with the serial numbers of the system and all major components. These numbers need to remain the same throughout the life of the computer.

If you replace the system board, you must restore the serial number of the system unit to its original value.

Before replacing the system board, save the original serial number by doing the following:

1. Install the LENOVO ThinkPad Hardware Maintenance Diskette Version 1.76 or later, and restart the computer.
2. From the main menu, select **1. Set System Identification**.
3. Select **2. Read S/N data from EEPROM**.

The serial number of each device in your computer is displayed; the serial number of the system unit is listed as follows:

- 20: Serial number

Write down that number.

Note: The serial number of the system unit is also written on the label attached to the bottom of the computer.

After you have replaced the system board, restore the serial number by doing the following:

1. Install the LENOVO ThinkPad Hardware Maintenance Diskette Version 1.76 or later and restart the computer.
2. From the main menu, select **1. Set System Identification**.
3. Select **1. Add S/N data from EEPROM**. Follow the instructions on the screen.

If the MTM and Product ID numbers differ from each other on the rear label, use what is shown for the Product ID field. See example below:

MTM on rear label:	TTTT-CTO S/N SSSSSSS
Product ID on rear label:	TTTT-MMM (Use this number when setting Serial Number)

In the example, the Serial Number to be input is “1STTTTMMMSSSSSSS”.

Retaining the UUID

The Universally Unique Identifier (UUID) is a 128-bit number uniquely assigned to your computer at production and stored in the EEPROM of your system board. The algorithm that generates the number is designed to provide unique IDs until the year A.D. 3400. No two computers in the world have the same number.

When you replace the system board, you must set the UUID on the new system board as follows:

1. Install the LENOVO ThinkPad Hardware Maintenance Diskette Version 1.76 or later, and restart the computer.
2. From the main menu, select **4. Assign UUID**. A new UUID is created and written. If a valid UUID already exists, it is not overwritten.

Reading or writing the ECA information

Information on Engineering Change Announcements (ECA) are stored in the EEPROM of the system board. The electronic storage of this information simplifies the procedure to check if the ECA has been previously applied to a machine. The machine does not need to be disassembled to check for the ECA application.

To check what ECAs have been previously applied to the machine, use the ECA Information Read/Write function on the LENOVO ThinkPad Hardware Maintenance Diskette Version 1.76 or later.

1. Insert the LENOVO ThinkPad Hardware Maintenance Diskette Version 1.76 or later, and restart the computer.
2. From the main menu, select **6. Set ECA Information**.
3. To read ECA information, select **2. Read ECA/rework number from EEPROM** and follow the instruction.
4. To read box build date, select **5. Read box build date from EEPROM**, and follow the instruction on the screen.

After an ECA has been applied to the machine, the EEPROM must be updated to reflect the ECA's application. Use the LENOVO ThinkPad Hardware Maintenance Diskette Version 1.76 or later to update the EEPROM.

Note: Only the ECA number is stored in the EEPROM. The machine type of the ECA is assumed be the same as the machine type of the machine that had the ECA applied to it.

1. Insert the LENOVO ThinkPad Hardware Maintenance Diskette Version 1.76 or later, and restart the computer.
2. From the main menu, select **6. Set ECA Information**.
3. To write ECA information, select **1. Write ECA/rework number from EEPROM**, and follow the instruction.
4. To write box build date, select **4. Write box build date from EEPROM**, and follow the instruction on the screen.

If the system board is being replaced, try to read the ECA information from the old system board and transfer the information to the new system. If the system board is inoperable, this will not be possible.

Chapter 8. Removing and replacing a FRU

This chapter presents directions and drawings for use in removing and replacing a FRU. Be sure to observe the following general rules:

1. Do not try to service any computer unless you have been trained and certified. An untrained person runs the risk of damaging parts.
2. Before replacing any FRU, review Chapter 7 “FRU replacement notices” on page 59.
3. Begin by removing any FRUs that have to be removed before replacing the failing FRU. Any such FRUs are listed at the top of each FRU replacement page. Remove them in the order in which they are listed.
4. Follow the correct sequence in the steps for removing a FRU, as given in the drawings by the numbers in square callouts.
5. When turning a screw to replace a FRU, turn it in the direction as given by the arrow in the drawing.
6. When removing a FRU, move it in the direction as given by the arrow in the drawing.
7. To put the new FRU in place, reverse the removal procedure and follow any notes that pertain to replacement. For information about connecting and arranging internal cables, see Chapter 9 “Locations” on page 129.
8. When replacing a FRU, use the correct screw(s) as shown in the procedures.

DANGER

Before removing any FRU, turn off the computer, unplug all power cords from electrical outlets, remove the battery pack, and then disconnect any interconnecting cables.

Attention: After replacing a FRU, do not turn on the computer until you have made sure that all screws, springs, and other small parts are in place and none are loose inside the computer. Verify this by shaking the computer gently and listening for rattling sounds. Metallic parts or metal flakes can cause electrical short circuits.

Attention: The system board is sensitive to, and can be damaged by, electrostatic discharge. Before touching it, establish personal grounding by touching a ground point with one hand or by using an electrostatic discharge (ESD) strap (P/N 6405959).

© Copyright Lenovo 2011

Before servicing ThinkPad T420 and T420i

Some models of the ThinkPad T420 and T420i you are servicing might have the SIM card that the customer has installed.

If the computer you are servicing has the SIM card, remove it before you start the servicing.

To remove the SIM card, you need to remove the battery pack first. (See “1010 Battery pack” on page 65.)

After you finish the servicing, make sure that you insert the card back into the slot firmly.

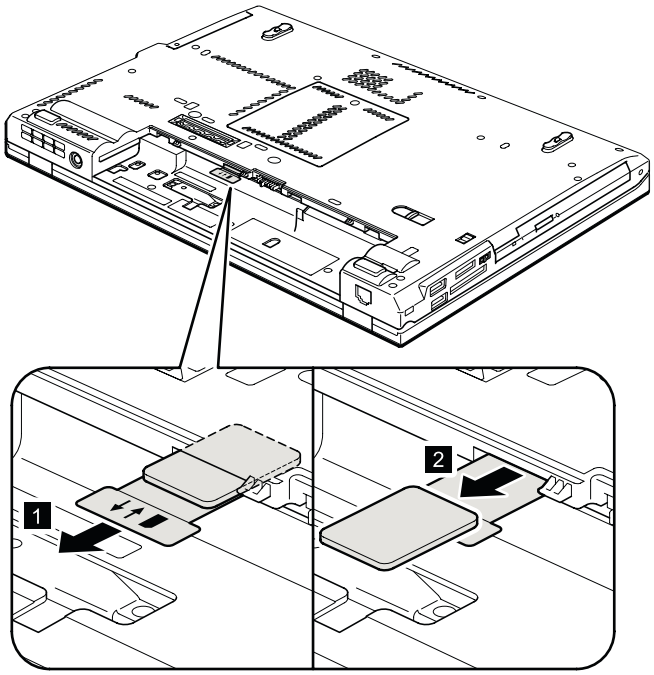

1010 Battery pack

Important notice for replacing a battery pack:
Lenovo ThinkVantage Toolbox (in Windows 7) has an automatic battery diagnostic that determines if the battery pack is defective. A battery pack FRU should not be replaced unless this diagnostic shows that the battery is defective.

The only exception to this is if the battery pack is physically damaged or a customer is reporting a possible safety issue.

If Lenovo ThinkVantage Toolbox is not installed in the computer, the customer should download this program before a non-physically damaged battery pack is replaced. Note that a physically damaged battery pack isa non-warranty replacement part.

Table 9. Removal steps of battery pack

DANGER

Use only the battery specified in the parts list for your computer. Any other battery could ignite or explode.

Unlock the battery latch 1. Holding the battery latch in the unlocked position 2, remove the battery pack in the direction shown by arrow 3.

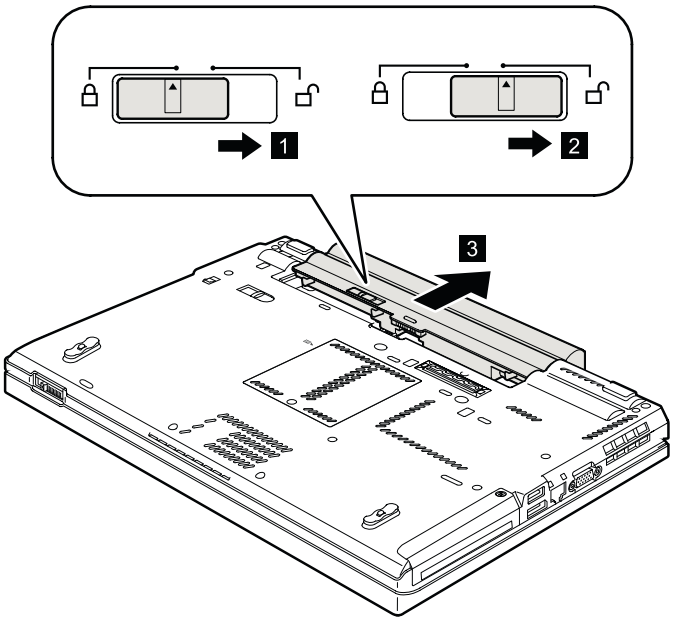

When installing: Install the battery pack in the slot. Make sure that the battery latch is in the locked position.

1020 ExpressCard blank bezel

Table 10. Removal steps of ExpressCard blank bezel

When you press the ExpressCard blank bezel **1**, it pops out **2**.

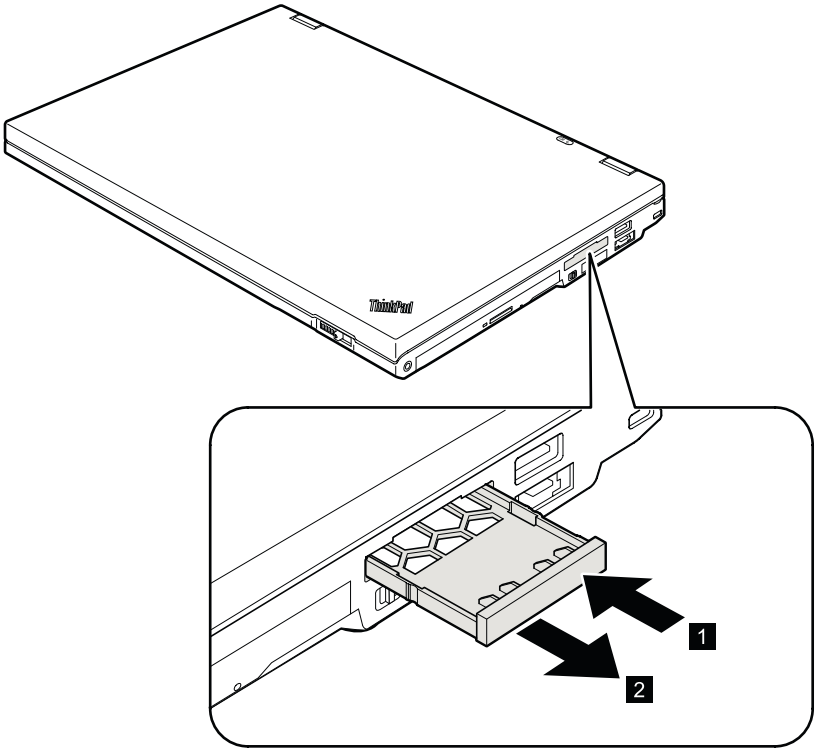

When installing: Make sure that the bezel is correctly oriented as shown in the following figure.

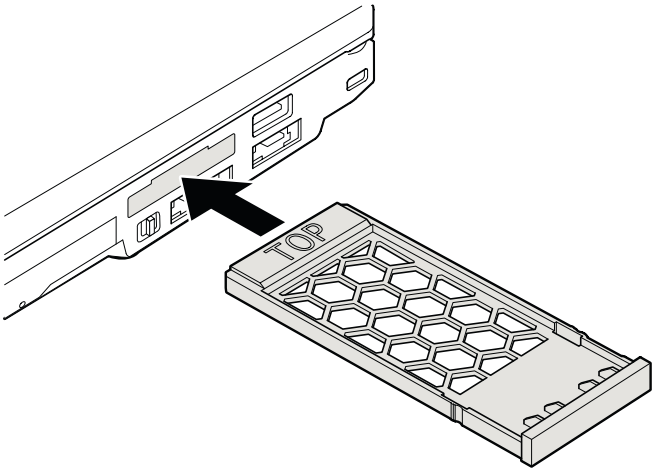

1030 Serial Ultrabay Enhanced device or travel bezel

For access, remove this FRU:
- “1010 Battery pack” on page 65

Table 11. Removal steps of Serial Ultrabay Enhanced device or travel bezel

Holding the bay lock latch in the unlocked position **1**, slide the bay eject latch in the direction shown by arrow **2**, and then pull out the Serial Ultrabay Enhanced device or the travel bezel in the direction shown by arrow **3** to completely remove it **4**.

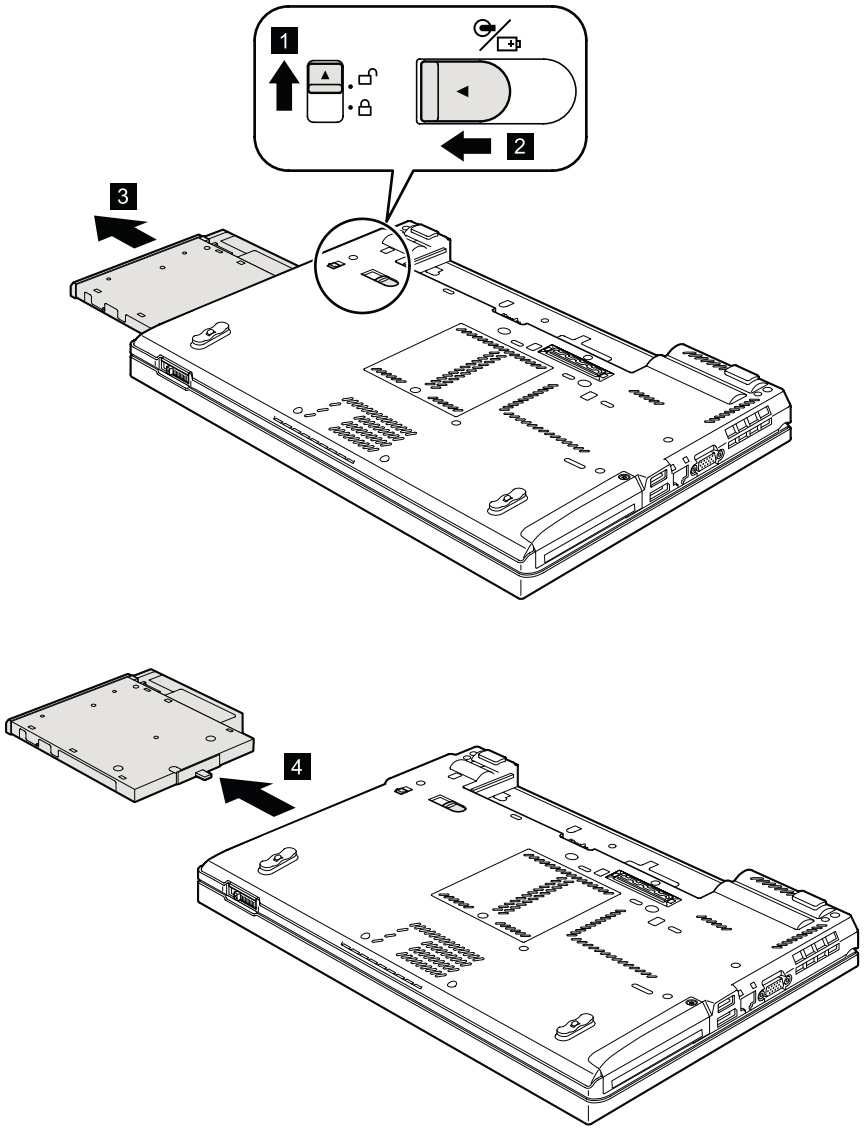

1040 Hard disk drive (HDD) and solid state drive (SSD)

For access, remove this FRU:
- “1010 Battery pack” on page 65

Attention:

- Do not drop the drive or apply any physical shock to it. The drive is sensitive to physical shock. Improper handling can cause damage and permanent loss of data.
- Before removing the drive, have the user make a backup copy of all the information on it if possible.
- Never remove the drive while the system is operating or is in suspend mode.

Table 12. Removal steps of hard disk drive and solid state drive

Note: Loosen the screw **1**, but do not remove it.

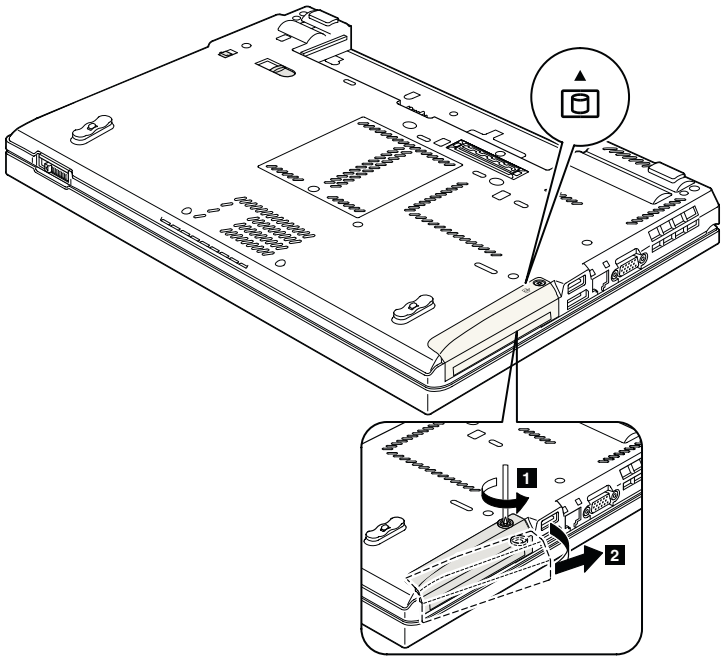

Step	Screw (quantity)	Color	Torque
1	Capture screw (1)	Black	0.181 Nm (1.85 kgfcm)

Table 12. Removal steps of hard disk drive and solid state drive (continued)

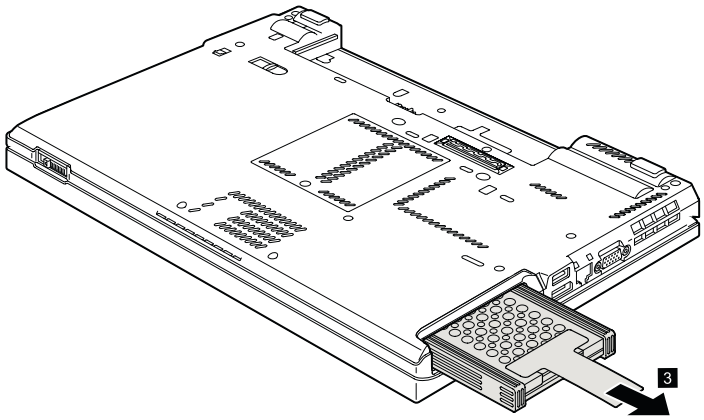

For HDD and HDD rubber rails (9.5mm):

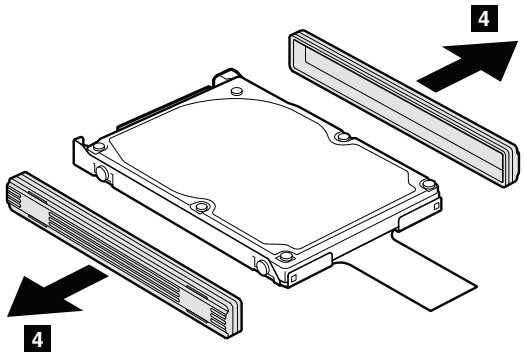

For HDD and HDD rubber rails (7.0mm) :

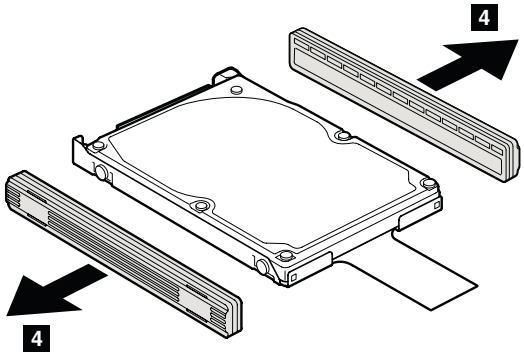

Table 12. Removal steps of hard disk drive and solid state drive (continued)

For SSD and spacers:

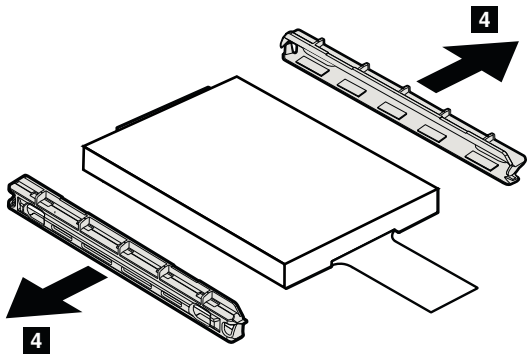

When installing: Make sure that SSD spacers or HDD rubber rails are attached firmly.

1050 DIMM slot cover

For access, remove this FRU:
- “1010 Battery pack” on page 65

Table 13. Removal steps of DIMM slot cover

Note: Loosen the screw **1**, but do not remove it.

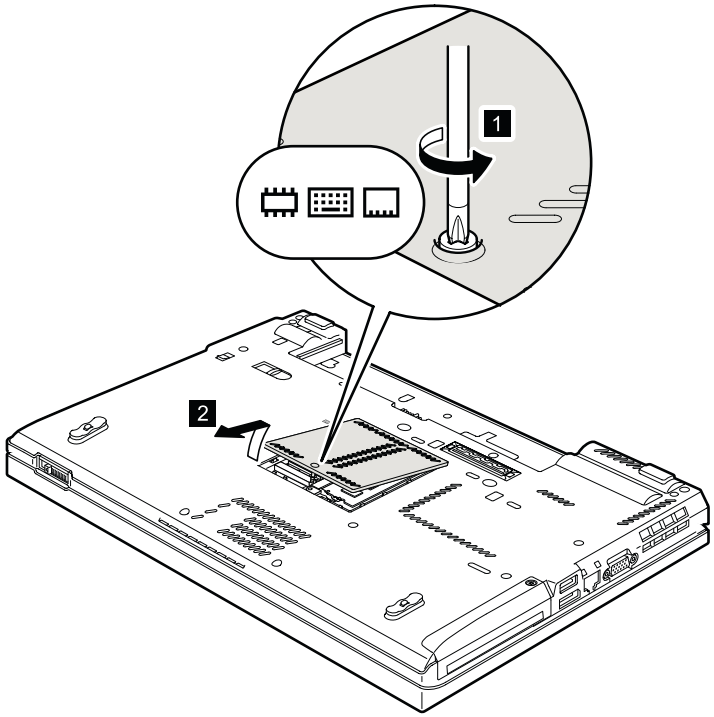

1060 DIMM (in the slot on the underside of the computer)

For access, remove these FRUs in order:
- “1010 Battery pack” on page 65
- “1050 DIMM slot cover” on page 71

Note: Your computer has two DIMM slots: one under the keyboard and another on the underside of the computer. If you install a DIMM in only one of the two slots, install it in the slot located under the keyboard.

Table 14. Removal steps of DIMM (in the slot on the underside of the computer)

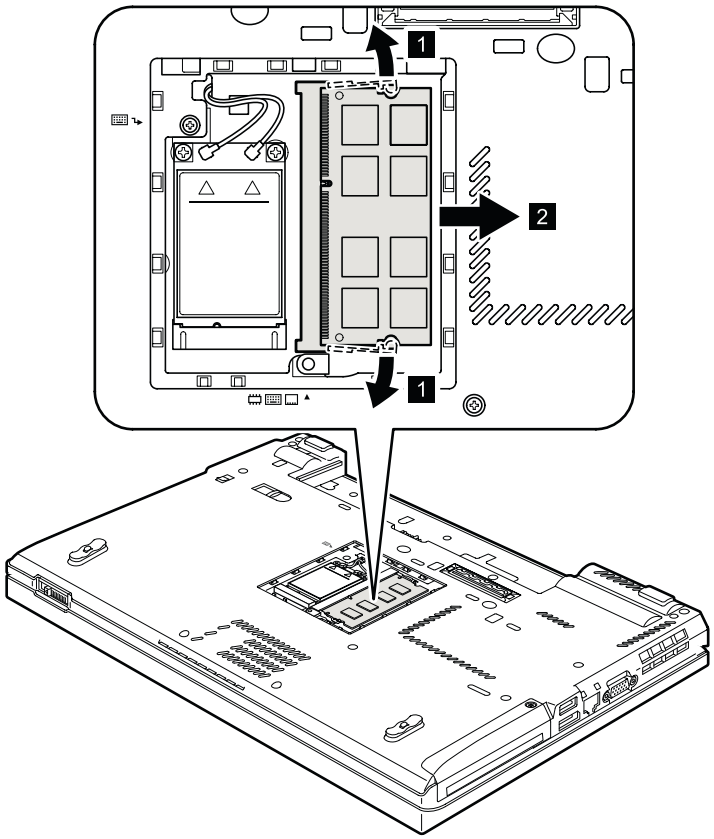

When installing: Insert the notched end of the DIMM into the socket. Press the DIMM firmly, and pivot it until it snaps into place. Make sure that it is firmly fixed in the slot and does not move easily.

1070 PCI Express Mini Card for wireless WAN

For access, remove these FRUs in order:

- “1010 Battery pack” on page 65
- “1050 DIMM slot cover” on page 71

Table 15. Removal steps of PCI Express Mini Card for wireless WAN

In step **1**, unplug the jacks by using the removal tool antenna RF connector (P/N: 08K7159), or pick the connectors with your fingers and gently unplug them in the direction of the arrow.

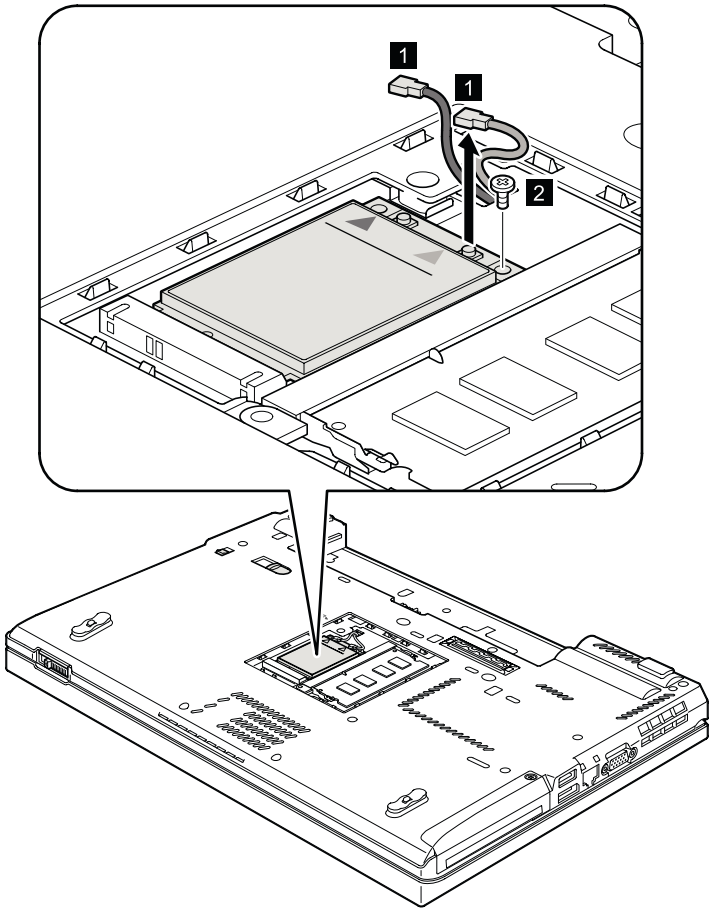

Step	Screw (quantity)	Color	Torque
2	M2 × 3 mm, wafer-head, nylon-coated (1)	Black	0.181 Nm (1.85 kgfcm)

Table 15. Removal steps of PCI Express Mini Card for wireless WAN (continued)

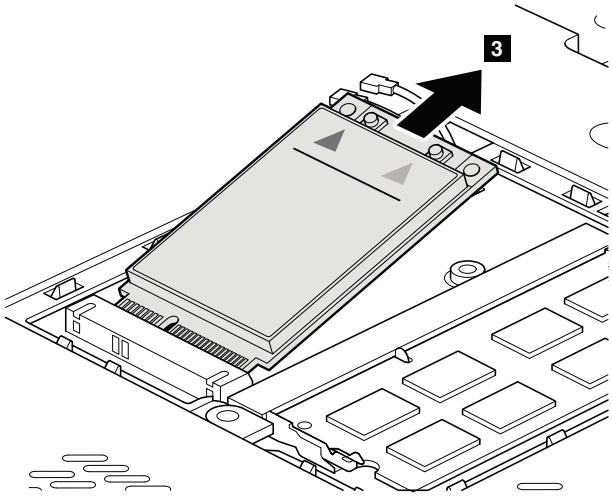

Note: Plug the yellow cable into the jack labeled **MAIN**, and the blue cable into the jack labeled **AUX** on the card.

If the computer you are servicing is a wireless WAN-ready model and does not have a wireless WAN card, route the antenna cables and secure them with a tape as shown in the following figure.

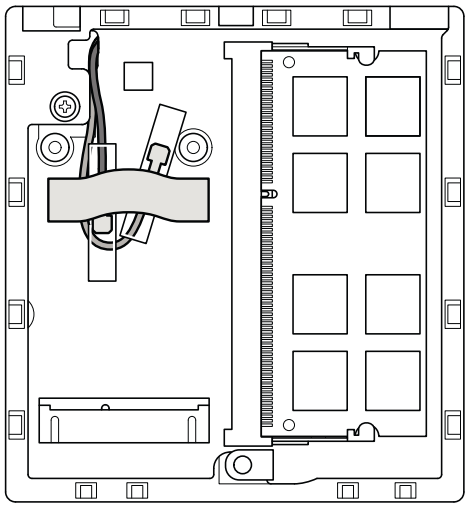

1080 Keyboard

For access, remove these FRUs in order:
- “1010 Battery pack” on page 65
- “1050 DIMM slot cover” on page 71

Table 16. Removal steps of keyboard

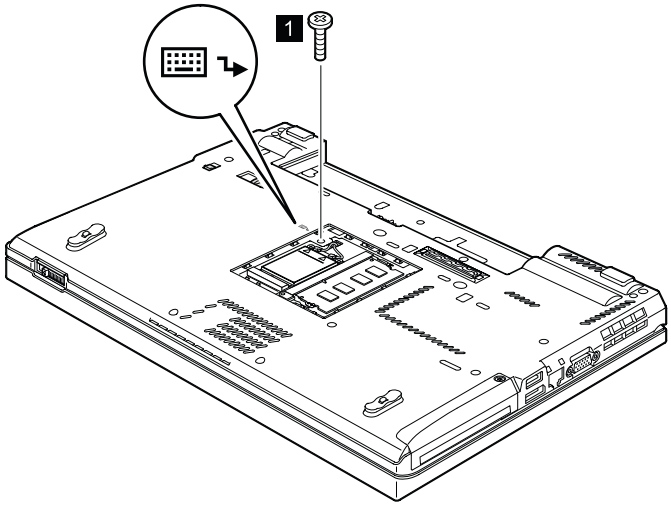

Step	Screw (quantity)	Color	Torque
1	M2 × 10 mm, wafer-head, nylon-coated (1)	Silver	0.181 Nm (1.85 kgfcm)

Push down the keyboard a little and slide it toward the arrow 2 to detach the front edge of the keyboard from the frame.

Table 16. Removal steps of keyboard (continued)

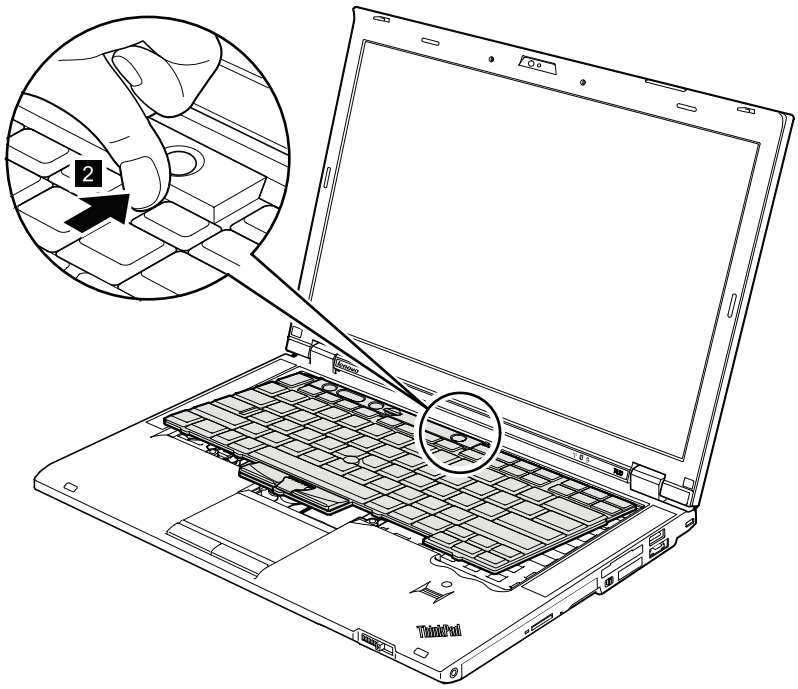

Lift the keyboard a little in the direction shown by arrow **3**, and then detach the connector **4**.

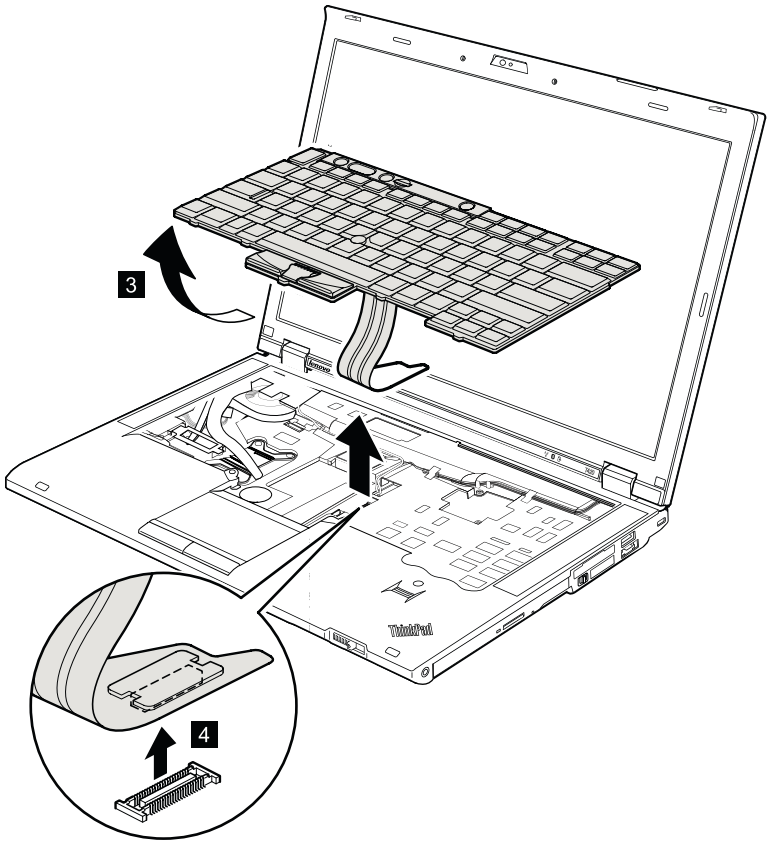

When installing the keyboard, do as follows:

Table 17. Installation steps of keyboard

1. Attach the keyboard connector.

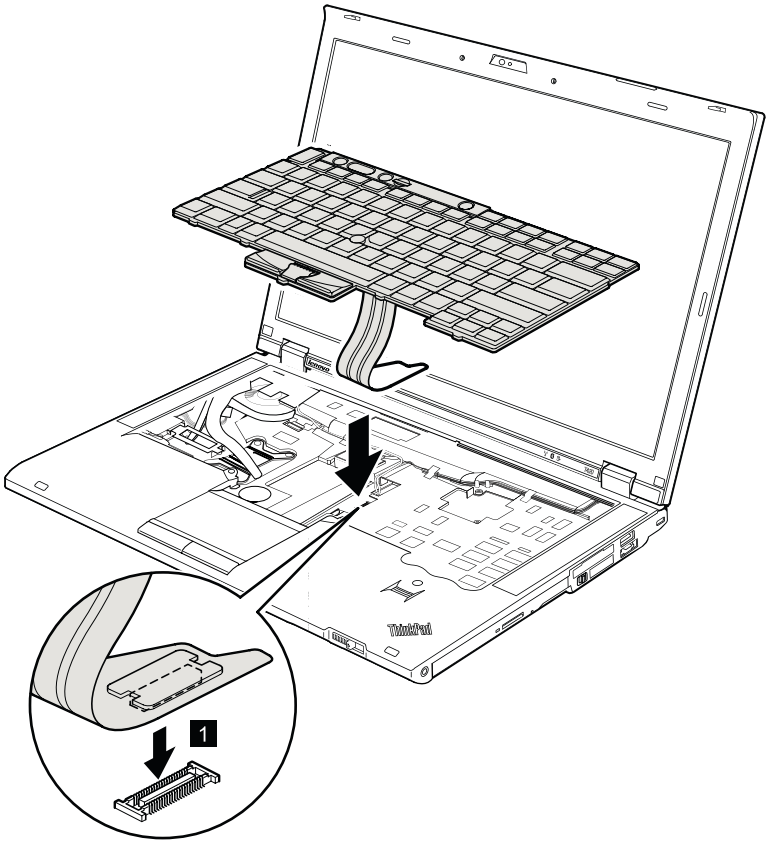

2. Attach the keyboard so that the keyboard edges **a** are under the frame as shown in the following figure.

Table 17. Installation steps of keyboard (continued)

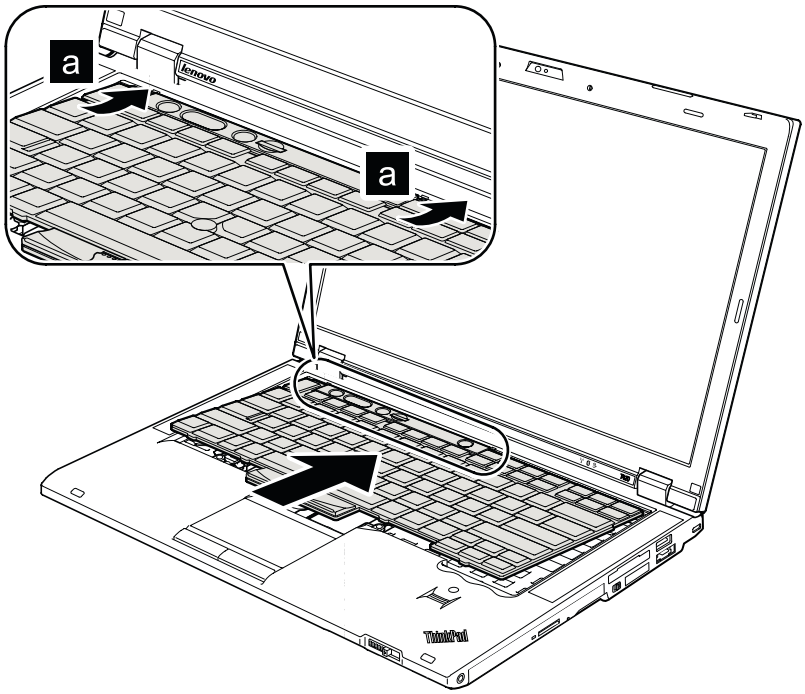

3. To make sure that the front edge of the keyboard is housed firmly, gently press the keys with your palms and slightly slide the keyboard toward you until it snaps into position.

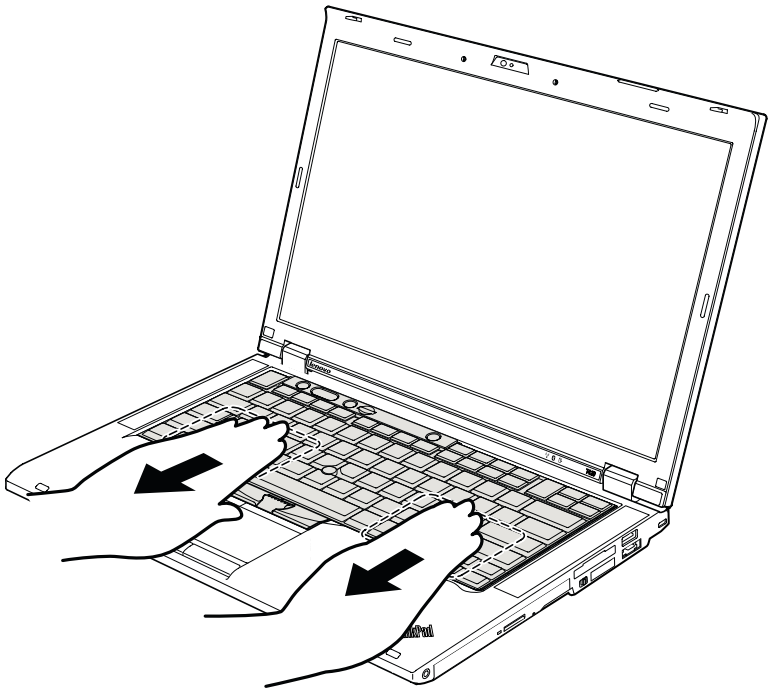

Table 17. Installation steps of keyboard (continued)

4. Make sure that the front edge of the keyboard **b** is attached firmly.

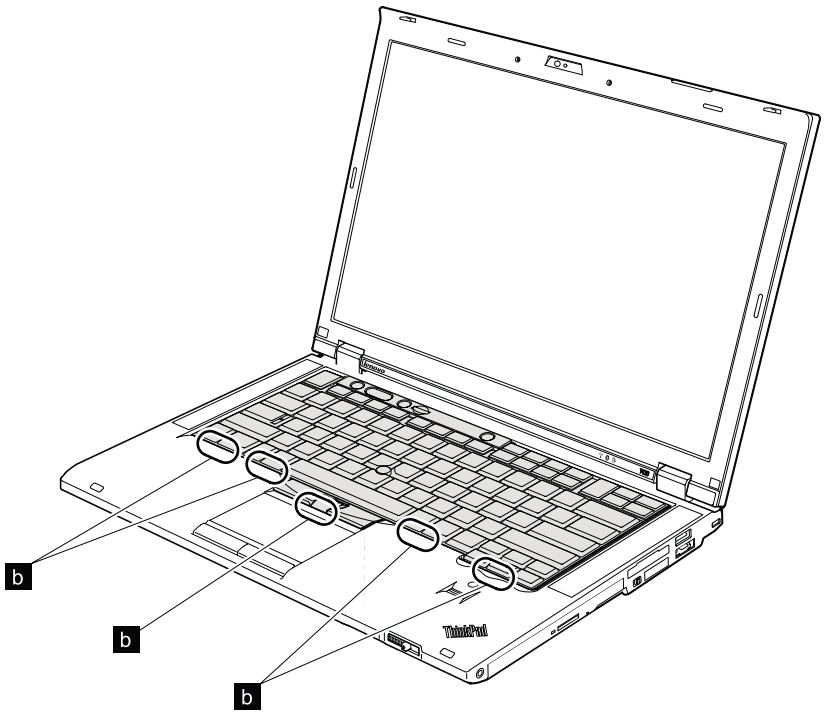

5. Secure the keyboard by tightening the screws from the bottom side of the computer.

1090 DIMM (in the slot under the keyboard)

For access, remove these FRUs in order:
- “1010 Battery pack” on page 65
- “1050 DIMM slot cover” on page 71
- “1080 Keyboard” on page 75

Note: Your computer has two DIMM slots: one under the keyboard and another on the underside of the computer. If you install a DIMM in only one of the two slots, install it in the slot located under the keyboard.

Table 18. Removal steps of DIMM (in the slot under the keyboard)

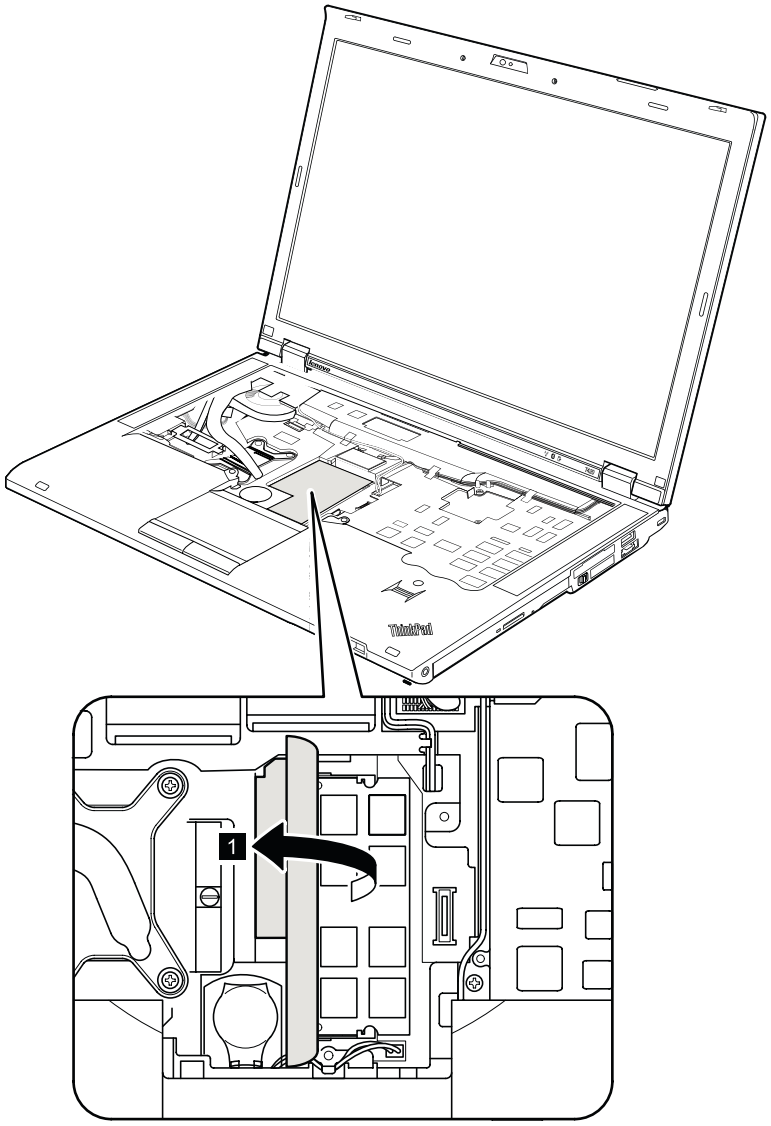

Table 18. Removal steps of DIMM (in the slot under the keyboard) (continued)

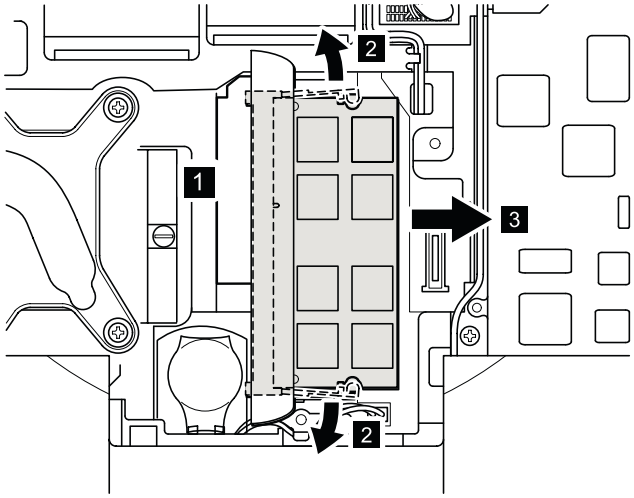

When installing: Insert the notched end of the DIMM into the socket. Press the DIMM firmly, and pivot it until it snaps into place. Make sure that it is firmly fixed in the slot and does not move easily.

1100 Backup battery

For access, remove these FRUs in order:

- “1010 Battery pack” on page 65
- “1050 DIMM slot cover” on page 71
- “1080 Keyboard” on page 75

Table 19. Removal steps of backup battery

DANGER

Use only the battery specified in the parts list for your computer. Any other battery could ignite or explode.

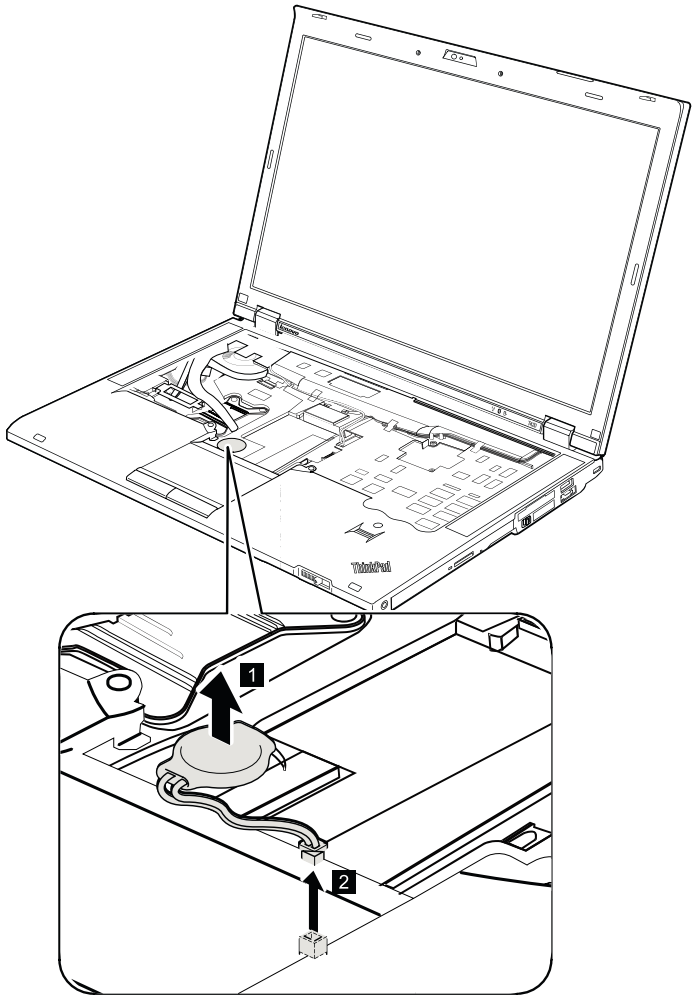

Table 19. Removal steps of backup battery (continued)

Cable routing: Attach the backup battery and route the cable as shown in the figure below and make sure that the battery connector is attached firmly.

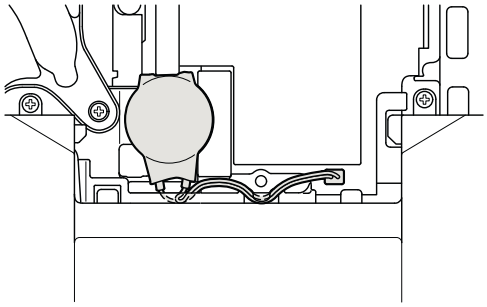

1110 PCI Express Mini Card for wireless LAN

For access, remove these FRUs in order:
- “1010 Battery pack” on page 65
- “1050 DIMM slot cover” on page 71
- “1080 Keyboard” on page 75

Table 20. Removal steps of PCI Express Mini Card for wireless LAN

In step **1**, unplug the jacks by using the removal tool antenna RF connector (P/N: 08K7159), or pick the connectors with your fingers and gently unplug them in the direction of the arrow.

Note: Some models might have only two antenna cables.

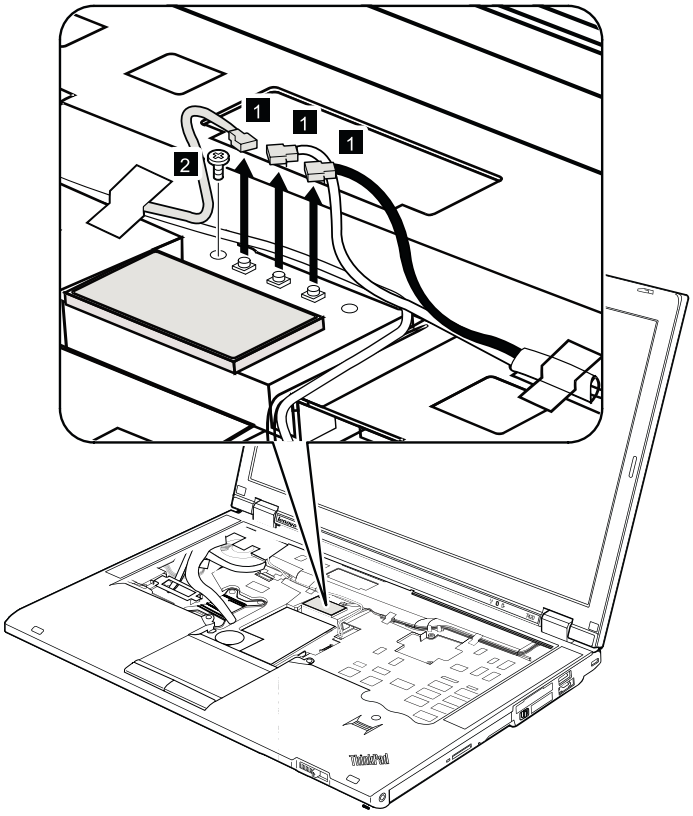

Step	Screw (quantity)	Color	Torque
2	M2 × 10 mm, wafer-head, nylon-coated (1)	Silver	0.181 Nm (1.85 kgfcm)

Table 20. Removal steps of PCI Express Mini Card for wireless LAN (continued)

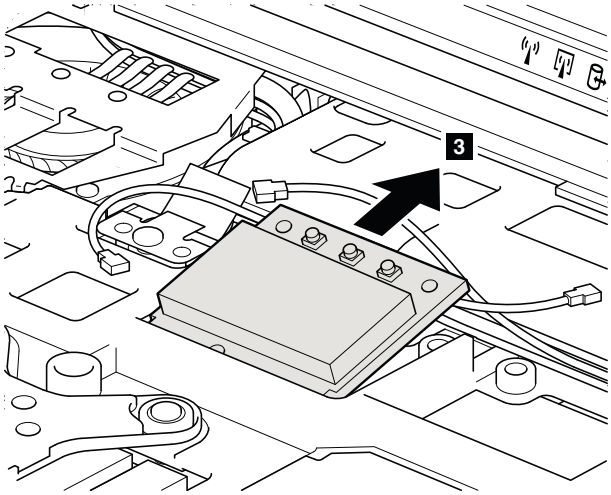

When installing:

- In models with a wireless LAN card that has two antenna connectors, plug the gray cable into the jack marked **MAIN** or **M**, and the black cable into the jack marked **AUX** or **A** on the card. If the computer you are servicing has three cables, put the white cable in the cable protection tube and secure it with a tape as shown in this figure.

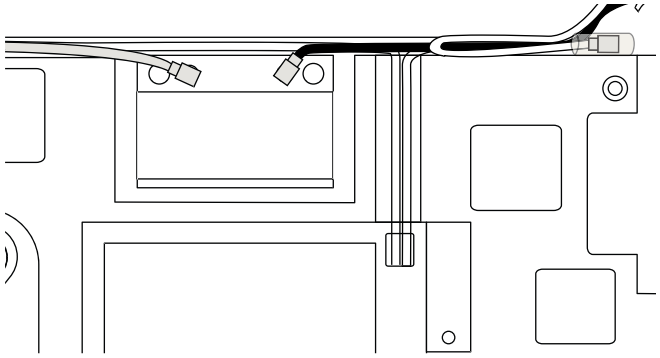

- In models with a wireless LAN card that has three antenna connectors, plug the gray cable (MAIN) into the jack marked **TR1**, the white cable (third) into the jack marked **RO** or **TR3**, and the black cable (AUX) into the jack marked **TR2** on the card.

1120 Keyboard bezel assembly, FPC cable, and *Bluethooth* daughter card (BDC-2.1)

For access, remove these FRUs in order:
- “1010 Battery pack” on page 65
- “1020 ExpressCard blank bezel” on page 66
- “1050 DIMM slot cover” on page 71
- “1080 Keyboard” on page 75

Note: The FPC cable is attached on the underside of the keyboard bezel assembly. In some models, the *Bluetooth* daughter card is also attached on the underside of the keyboard bezel assembly. For the models that do not have a *Bluetooth* daughter card, skip steps 8 to 10.

*Table 21. Removal steps of keyboard bezel assembly, FPC cable, and **Bluetooth** daughter card*

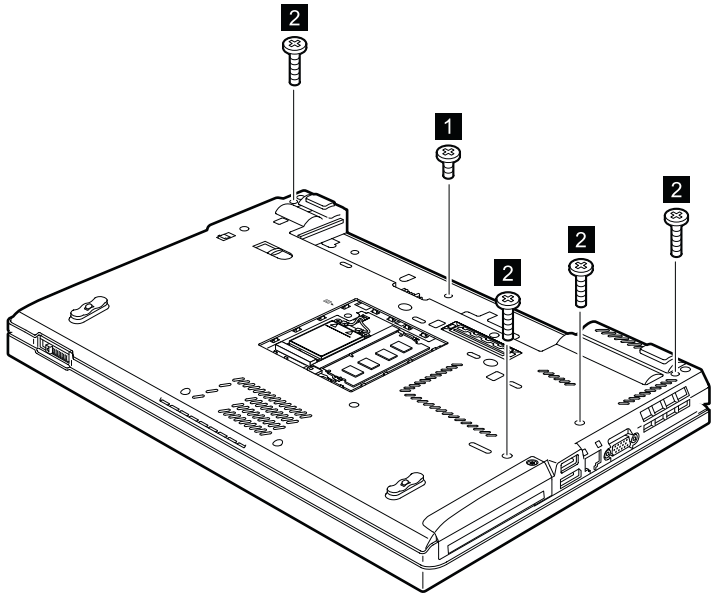

Step	Screw (quantity)	Color	Torque
1	M2 × 3 mm, wafer-head, nylon-coated (1)	Black	0.181 Nm (1.85 kgfcm)
2	M2 × 15 mm, wafer-head, nylon-coated (4)	Black	0.181 Nm (1.85 kgfcm)

Table 21. Removal steps of keyboard bezel assembly, FPC cable, and Bluetooth daughter card (continued)

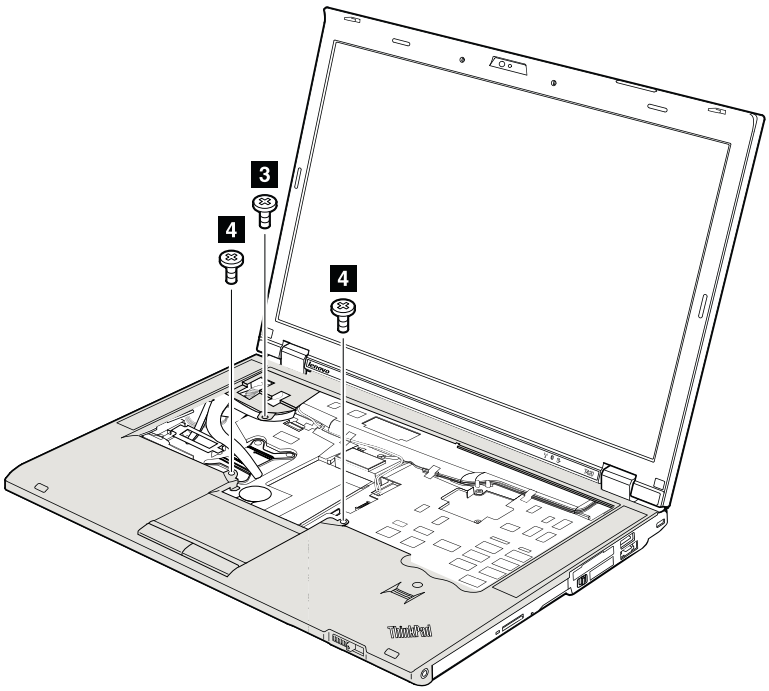

Step	Screw (quantity)	Color	Torque
3	M2 × 3 mm, wafer-head, nylon-coated (1)	Black	0.181 Nm (1.85 kgfcm)
4	Shoulder screw (2)	Black	0.181 Nm (1.85 kgfcm)

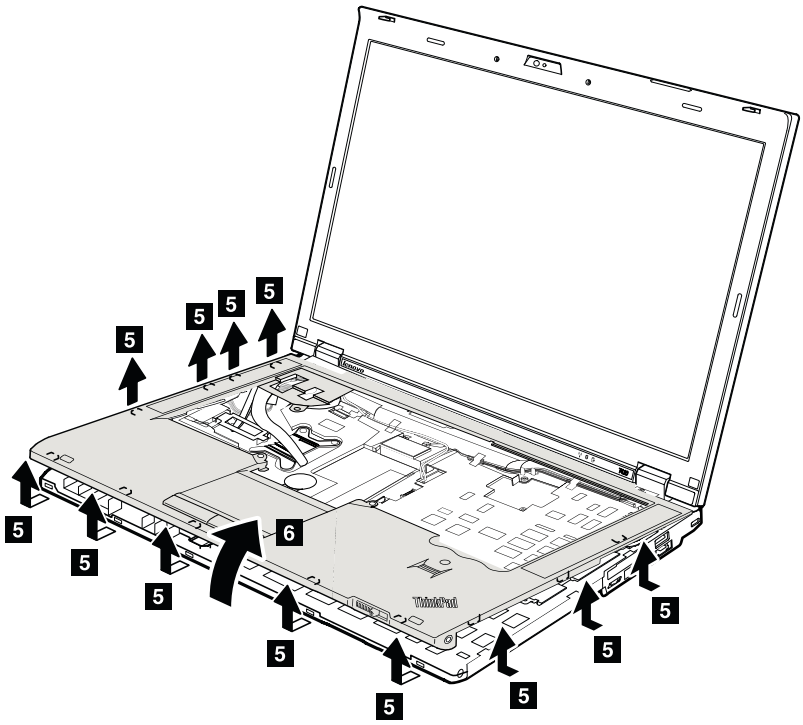

Table 21. Removal steps of keyboard bezel assembly, FPC cable, and Bluetooth daughter card (continued)

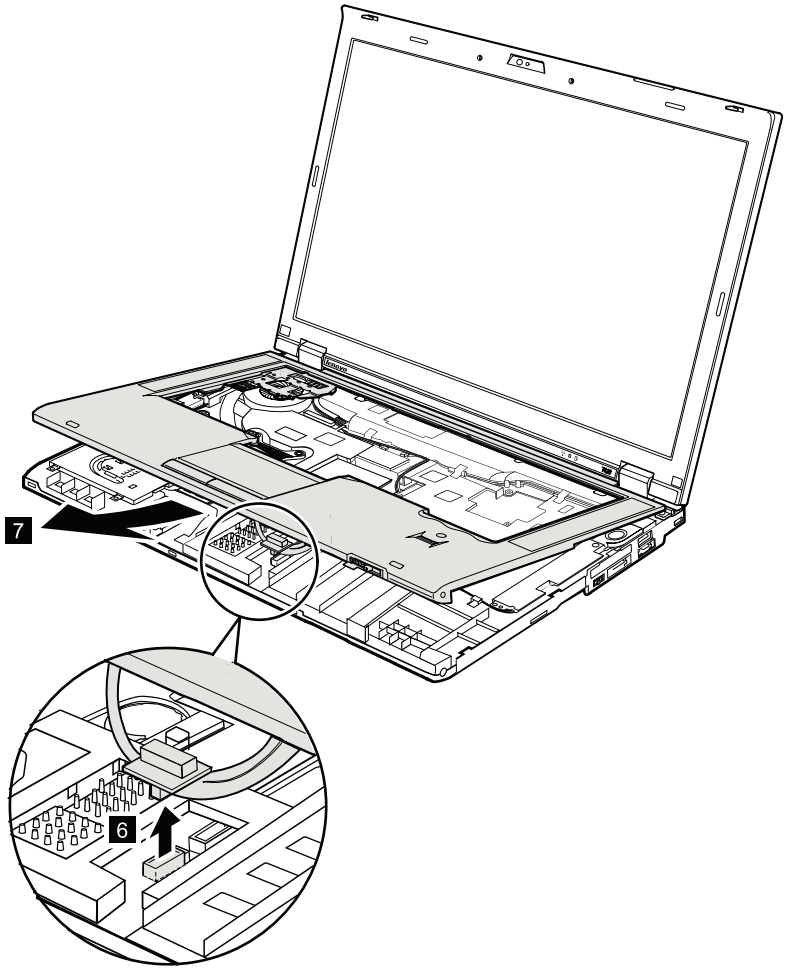

When installing: Make sure that the connector is attached firmly.

Table 21. Removal steps of keyboard bezel assembly, FPC cable, and Bluetooth daughter card (continued)

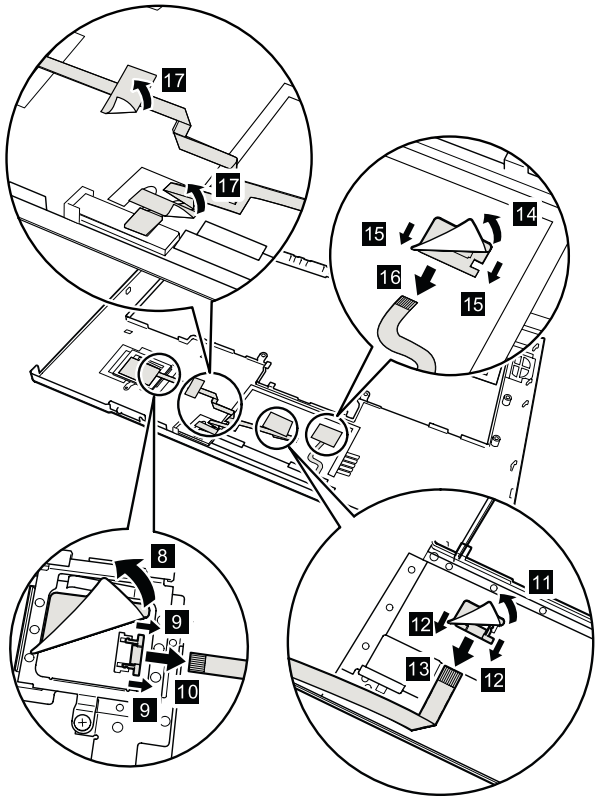

When installing: Make sure that the connectors are attached firmly.

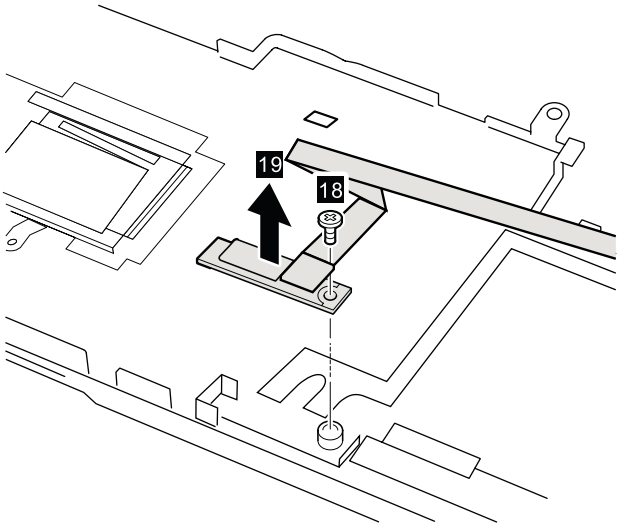

Step	Screw (quantity)	Color	Torque
13	M2 × 3 mm, wafer-head, nylon-coated (1)	Black	0.181 Nm (1.85 kgfcm)

Table 21. Removal steps of keyboard bezel assembly, FPC cable, and Bluetooth daughter card (continued)

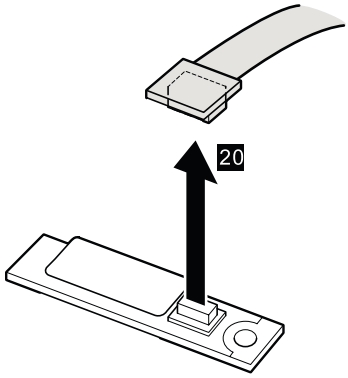

When installing: Make sure that the connector is attached firmly.

1130 SmartCard or Contactless SmartCard

For access, remove these FRUs in order:

- “1010 Battery pack” on page 65
- “1050 DIMM slot cover” on page 71
- “1080 Keyboard” on page 75
- “1120 Keyboard bezel assembly, FPC cable, and *Bluethooth* daughter card (BDC-2.1)” on page 86

Table 22. Removal steps of SmartCard or Contactless SmartCard

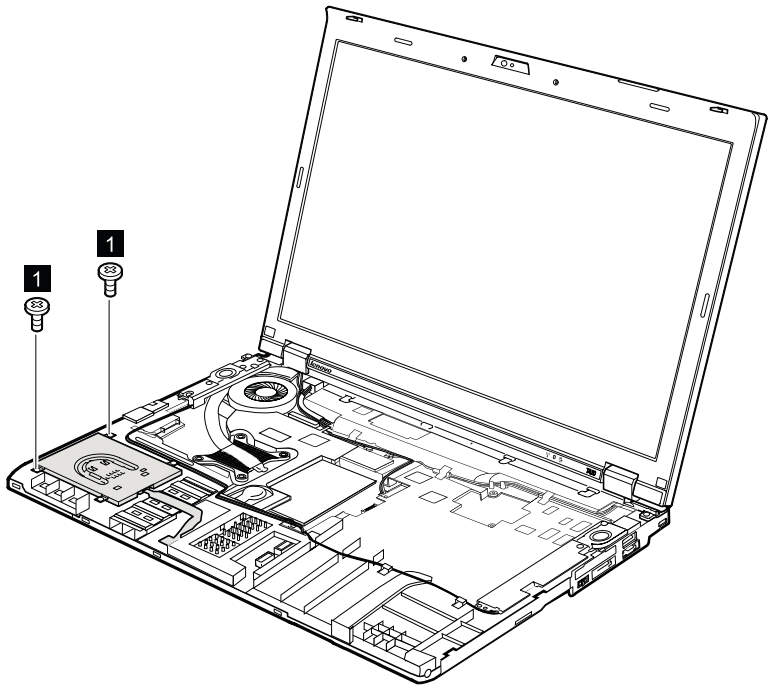

Step	Screw (quantity)	Color	Torque
1	M2 × 3 mm, wafer-head, nylon-coated (2)	Black	0.181 Nm (1.85 kgfcm)

Table 22. Removal steps of SmartCard or Contactless SmartCard (continued)

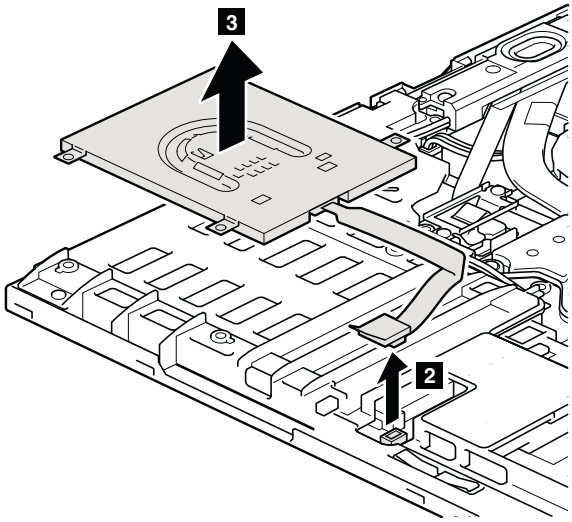

When installing: Make sure that the connector is attached firmly.

Table 23. Removal steps of SmartCard dummy spacer

Some models have a SmartCard dummy spacer as a miscellaneous part. For those models, remove the spacer as shown:

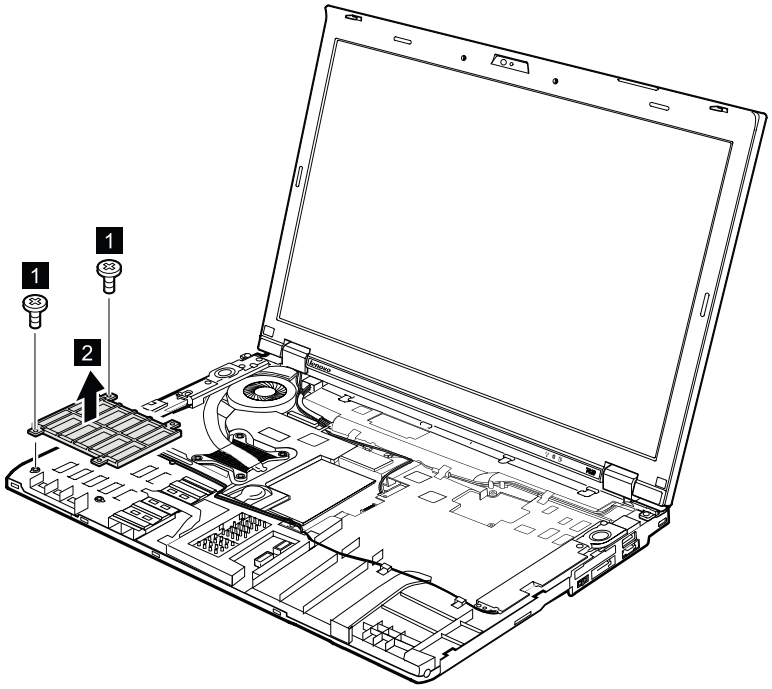

Step	Screw (quantity)	Color	Torque
1	M2 × 3 mm, wafer-head, nylon-coated (2)	Black	0.181 Nm (1.85 kgfcm)

1140 Modem daughter card (MDC)

For access, remove these FRUs in order:
- “1010 Battery pack” on page 65
- “1050 DIMM slot cover” on page 71
- “1080 Keyboard” on page 75
- “1120 Keyboard bezel assembly, FPC cable, and *Bluethooth* daughter card (BDC-2.1)” on page 86

Table 24. Removal steps of modem daughter card (MDC)

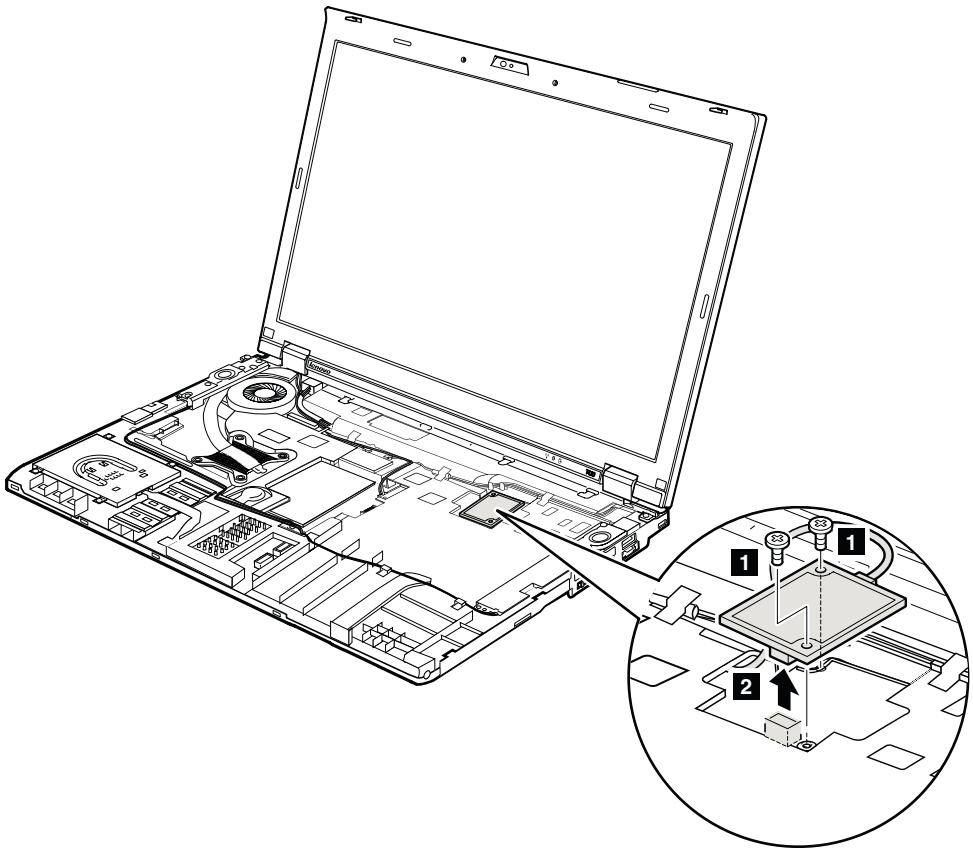

Step	Screw (quantity)	Color	Torque
1	M2 × 3 mm, wafer-head, nylon-coated (2)	Black	0.181 Nm (1.85 kgfcm)

When installing: Make sure that the connector is attached firmly.

1150 Speaker assembly

For access, remove these FRUs in order:
- “1010 Battery pack” on page 65
- “1050 DIMM slot cover” on page 71
- “1080 Keyboard” on page 75
- “1120 Keyboard bezel assembly, FPC cable, and *Bluethooth* daughter card (BDC-2.1)” on page 86

Table 25. Removal steps of speaker assembly

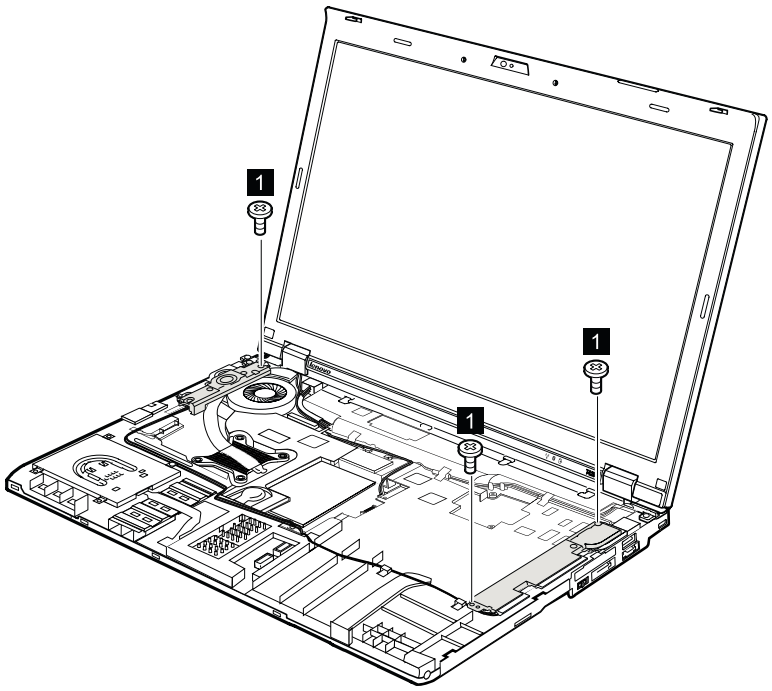

Step	Screw (quantity)	Color	Torque
1	M2 × 3 mm, wafer-head, nylon-coated (3)	Black	0.181 Nm (1.85 kgfcm)

Table 25. Removal steps of speaker assembly (continued)

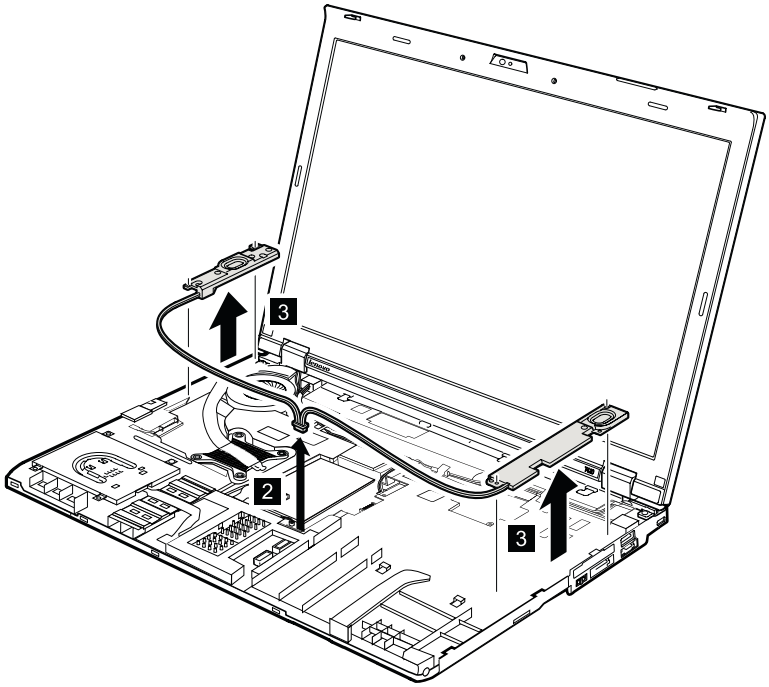

When installing: Attach the speaker assembly and route the cable as shown in the following figure, and make sure that the speaker connector is attached firmly.

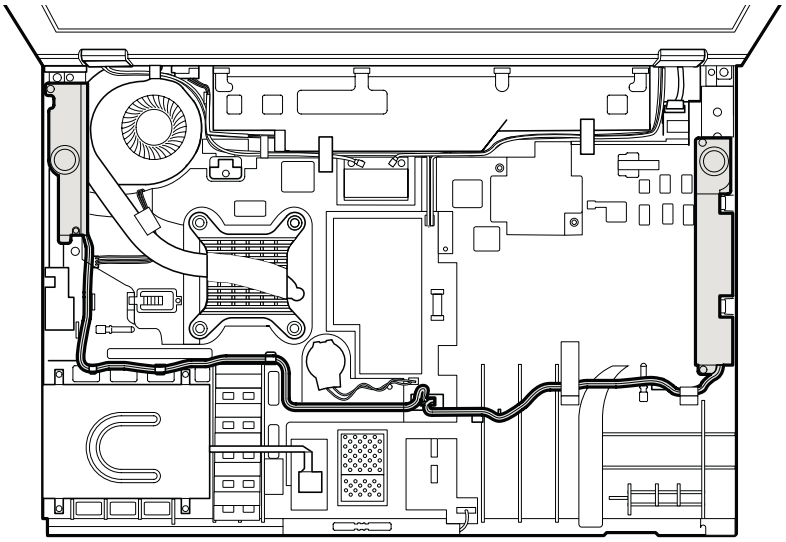

1160 LCD unit

For access, remove these FRUs in order:
- “1010 Battery pack” on page 65
- “1020 ExpressCard blank bezel” on page 66
- “1050 DIMM slot cover” on page 71
- “1070 PCI Express Mini Card for wireless WAN” on page 73
- “1080 Keyboard” on page 75
- “1110 PCI Express Mini Card for wireless LAN” on page 84
- “1120 Keyboard bezel assembly, FPC cable, and *Bluethooth* daughter card (BDC-2.1)” on page 86

Table 26. Removal steps of LCD unit

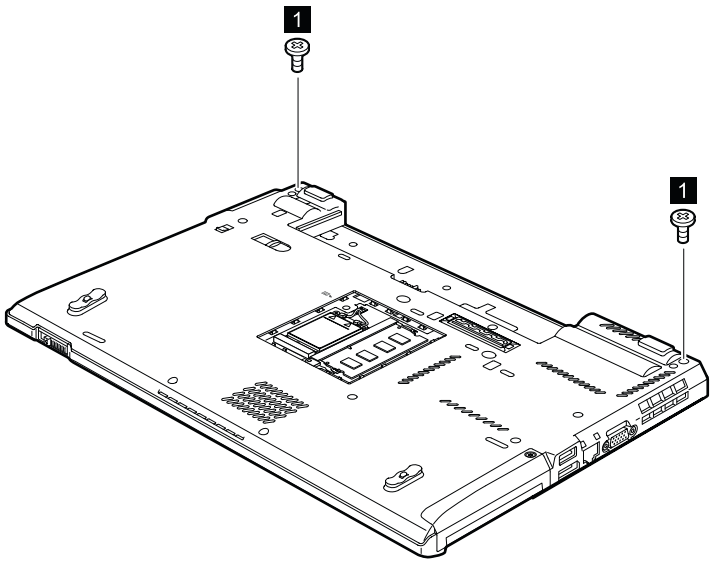

Step	Screw (quantity)	Color	Torque
1	M2.5 × 6 mm, wafer-head, nylon-coated (2)	Black	0.392 Nm (4.0 kgfcm)

Table 26. Removal steps of LCD unit (continued)

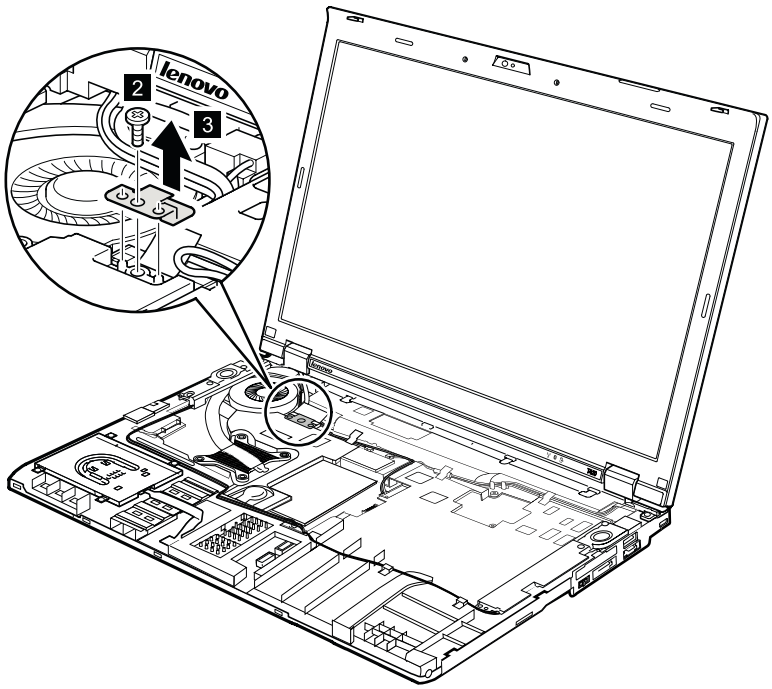

Step	Screw (quantity)	Color	Torque
2	M2 × 3 mm, wafer-head, nylon-coated (1)	Black	0.181 Nm (1.85 kgfcm)

Table 26. Removal steps of LCD unit (continued)

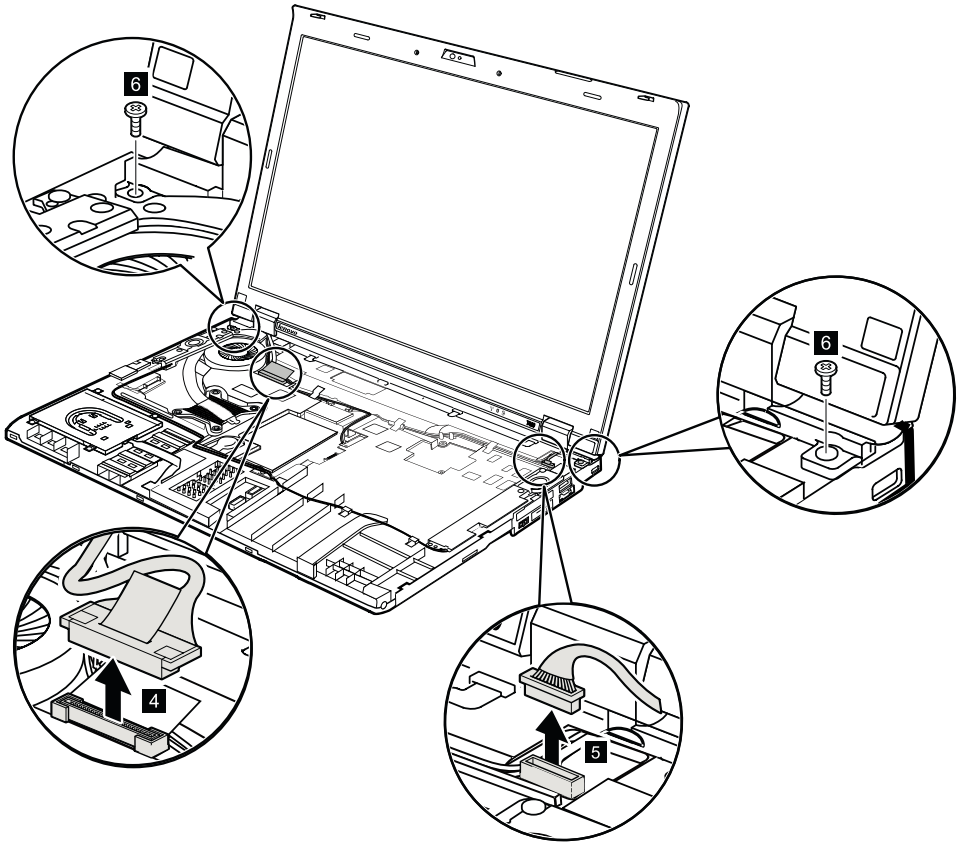

Step	Screw (quantity)	Color	Torque
6	M2.5 × 6 mm, wafer-head, nylon-coated (2)	Black	0.392 Nm (4.0 kgfcm)

Table 26. Removal steps of LCD unit (continued)

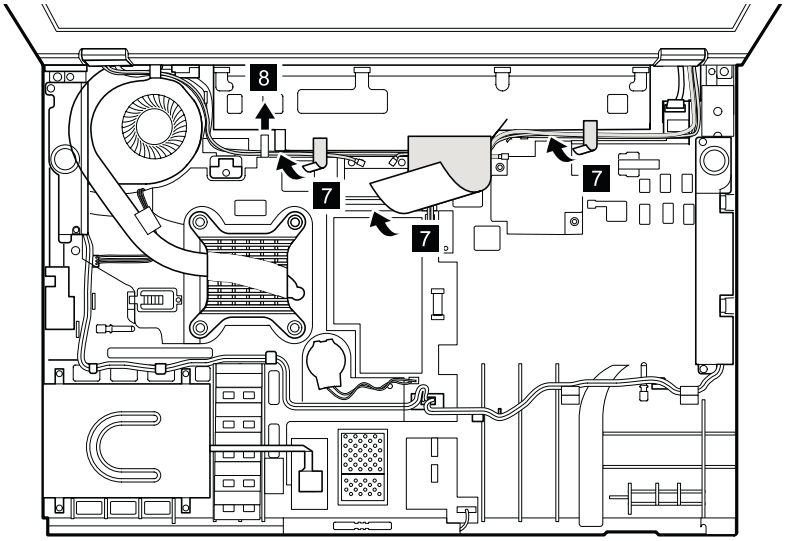

When installing:

- Make sure that you attach the connectors firmly.
- Make sure that you route the cables correctly and you tape up in the proper positions as shown in the above figure.
- When you route the cables, make sure that they are not subjected to any tension. Tension could cause the cables to be damaged by the cable guides, or a wire to be broken.

Table 26. Removal steps of LCD unit (continued)

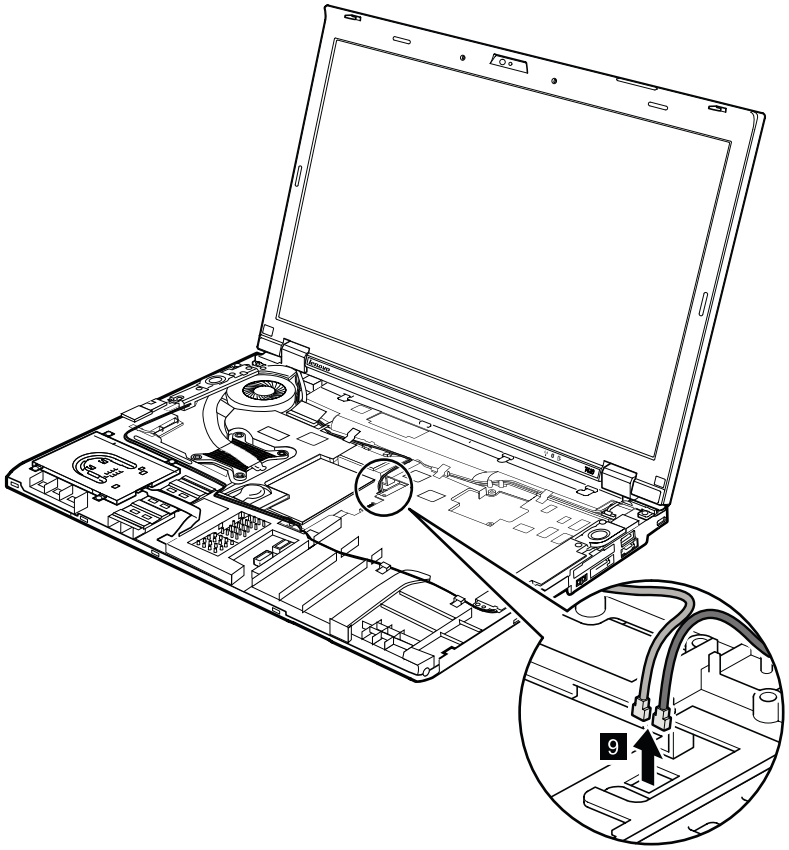

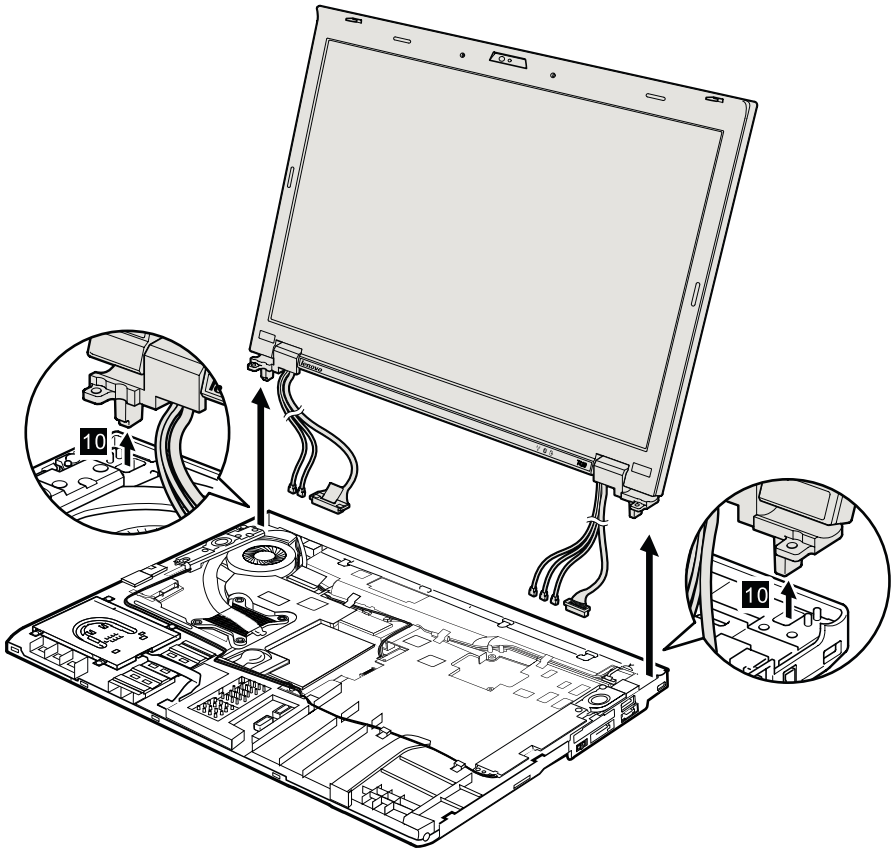

1170 Fan assembly

For access, remove these FRUs in order:

- “1010 Battery pack” on page 65
- “1020 ExpressCard blank bezel” on page 66
- “1050 DIMM slot cover” on page 71
- “1070 PCI Express Mini Card for wireless WAN” on page 73
- “1080 Keyboard” on page 75
- “1110 PCI Express Mini Card for wireless LAN” on page 84
- “1120 Keyboard bezel assembly, FPC cable, and *Bluethooth* daughter card (BDC-2.1)” on page 86
- “1150 Speaker assembly” on page 94
- “1160 LCD unit” on page 96

Table 27. Removal steps of fan assembly

Note: Loosen the screws 1a to 1d in order, but do not remove them.

For Discrete Graphics models:

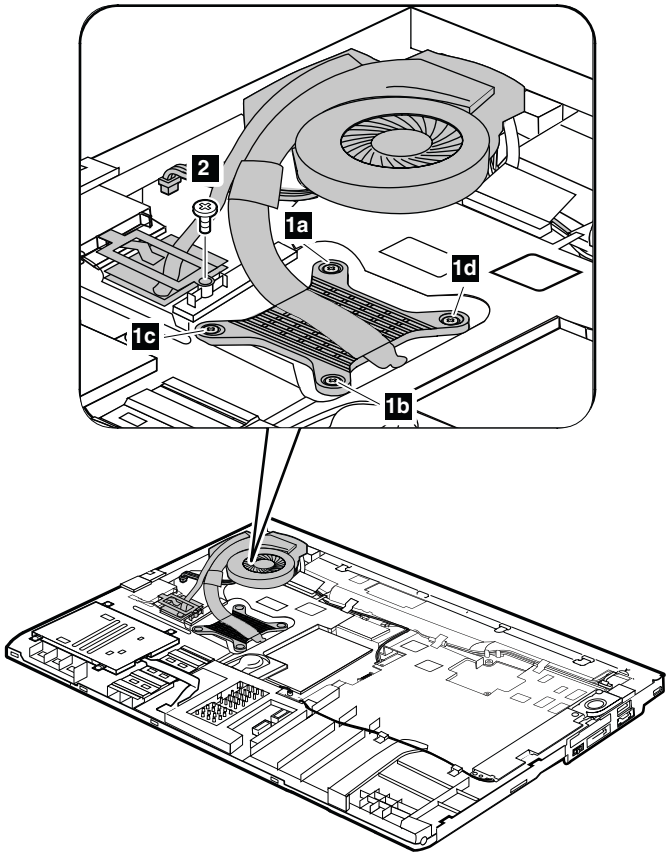

Table 27. Removal steps of fan assembly (continued)

For Integreted Graphics models:

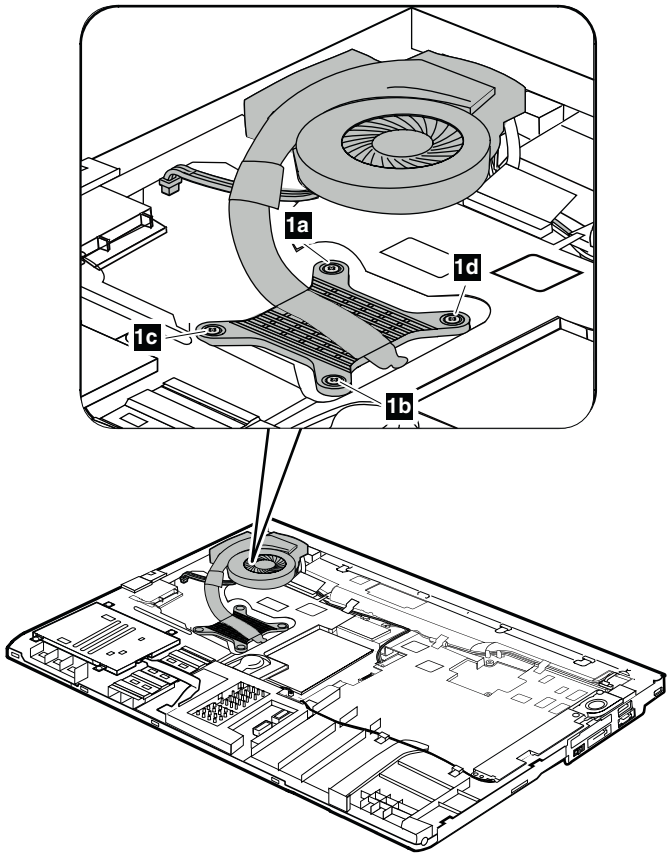

Step	Screw (quantity)	Color	Torque
1	Capture shoulder screw (4)	Silver	0.181 Nm (1.85 kgfcm)
2	M2 × 3 mm, wafer-head, nylon-coated (1)	black	0.181 Nm (1.85 kgfcm)

Table 27. Removal steps of fan assembly (continued)

For Discrete Graphics models:

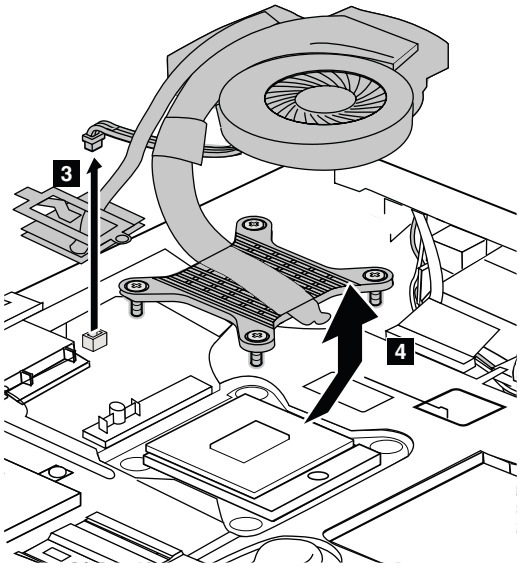

For Integreted Graphics models:

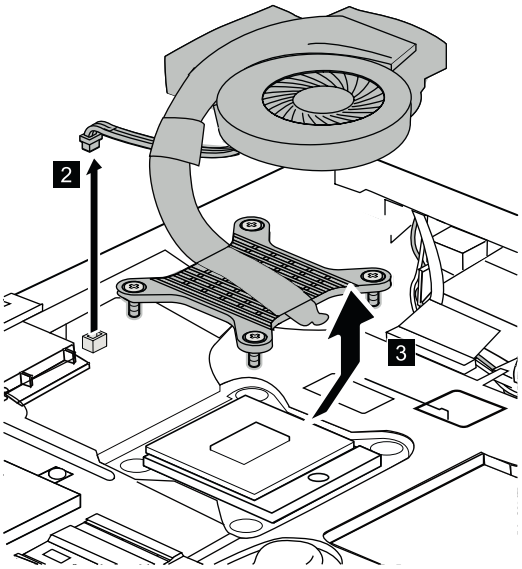

Table 27. Removal steps of fan assembly (continued)

When installing:

- Before you attach the fan assembly to the computer, apply thermal grease, at an amount of 0.2 grams, on the parts marked **a** as in the following figures. Either too much or too less application of grease can cause a thermal problem due to imperfect contact with a component. For the fan in the integrated graphics models, you need to peel the thin film off from the thermal rubber marked **b**.
  For Discrete Graphics models:

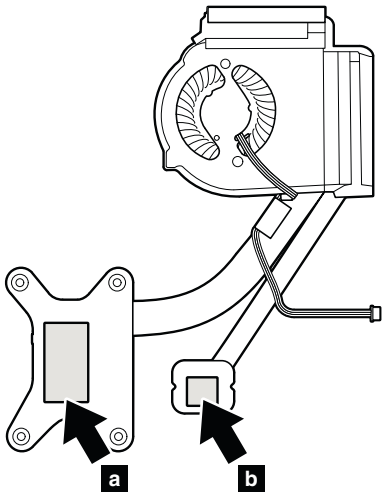

For Integrated Graphics models:

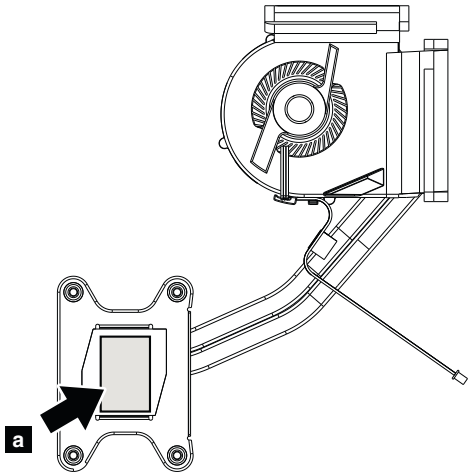

Table 27. Removal steps of fan assembly (continued)

- When attaching the fan assembly to the frame, take care not to damage the heat sink **a** of the fan assembly.

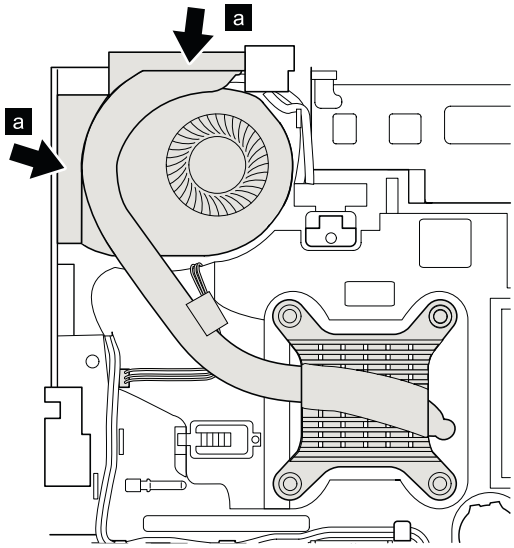

- Make sure that the fan connector is attached firmly.

1180 CPU

For access, remove these FRUs in order:

- “1010 Battery pack” on page 65
- “1020 ExpressCard blank bezel” on page 66
- “1050 DIMM slot cover” on page 71
- “1070 PCI Express Mini Card for wireless WAN” on page 73
- “1080 Keyboard” on page 75
- “1110 PCI Express Mini Card for wireless LAN” on page 84
- “1120 Keyboard bezel assembly, FPC cable, and *Bluethooth* daughter card (BDC-2.1)” on page 86
- “1150 Speaker assembly” on page 94
- “1160 LCD unit” on page 96
- “1170 Fan assembly” on page 101

Attention: The CPU is extremely sensitive. When you service the CPU, avoid any kind of rough handling.

Table 28. Removal steps of CPU

Rotate the head of the screw in the direction shown by arrow **1** to release the lock, and then remove the CPU **2**. After that peel the mylar off from the CPU as shown by arrow **4**.

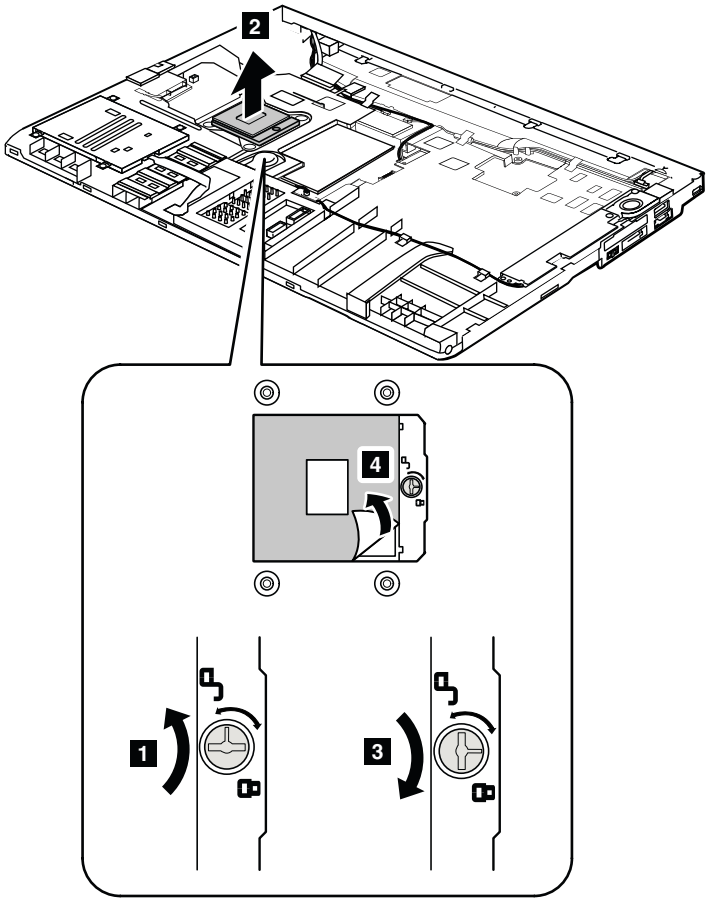

When installing: Make sure that the mylar is attached to the CPU. Place the CPU on the CPU socket, and then rotate the head of the screw in the direction shown by arrow **3** to secure the CPU.

1190 Base cover assembly and DC-in connector cable

For access, remove these FRUs in order:

- “1010 Battery pack” on page 65
- “1020 ExpressCard blank bezel” on page 66
- “1030 Serial Ultrabay Enhanced device or travel bezel” on page 67
- “1040 Hard disk drive (HDD) and solid state drive (SSD)” on page 68
- “1050 DIMM slot cover” on page 71
- “1070 PCI Express Mini Card for wireless WAN” on page 73
- “1080 Keyboard” on page 75
- “1110 PCI Express Mini Card for wireless LAN” on page 84
- “1120 Keyboard bezel assembly, FPC cable, and *Bluethooth* daughter card (BDC-2.1)” on page 86
- “1150 Speaker assembly” on page 94
- “1160 LCD unit” on page 96
- “1170 Fan assembly” on page 101

Table 29. Removal steps of base cover assembly and DC-in connector cable

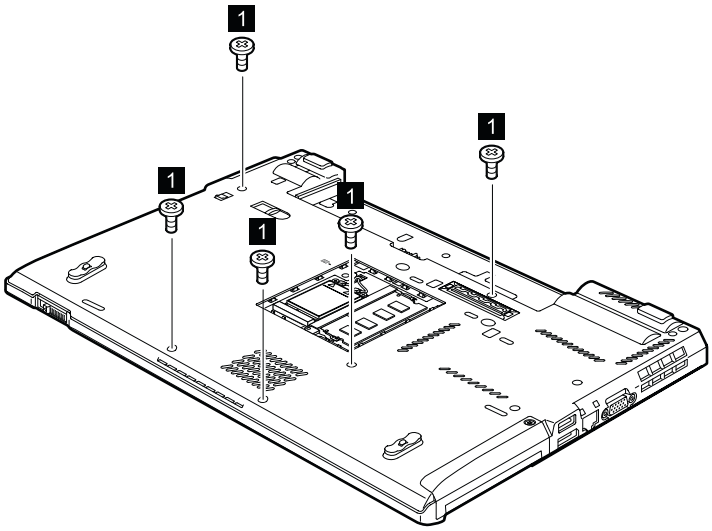

Step	Screw (quantity)	Color	Torque
1	M2 × 8 mm, wafer-head, nylon-coated (5)	Black	0.181 Nm (1.85 kgfcm)

Table 29. Removal steps of base cover assembly and DC-in connector cable (continued)

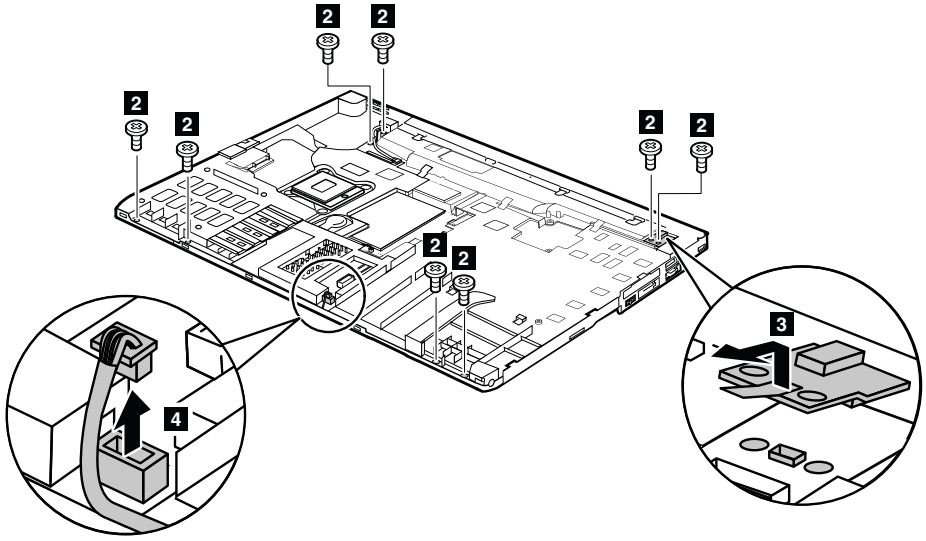

Step	Screw (quantity)	Color	Torque
2	M2 × 5 mm, wafer-head, nylon-coated (8)	Black	0.181 Nm (1.85 kgfcm)

When installing: Make sure that the connector is attached firmly.

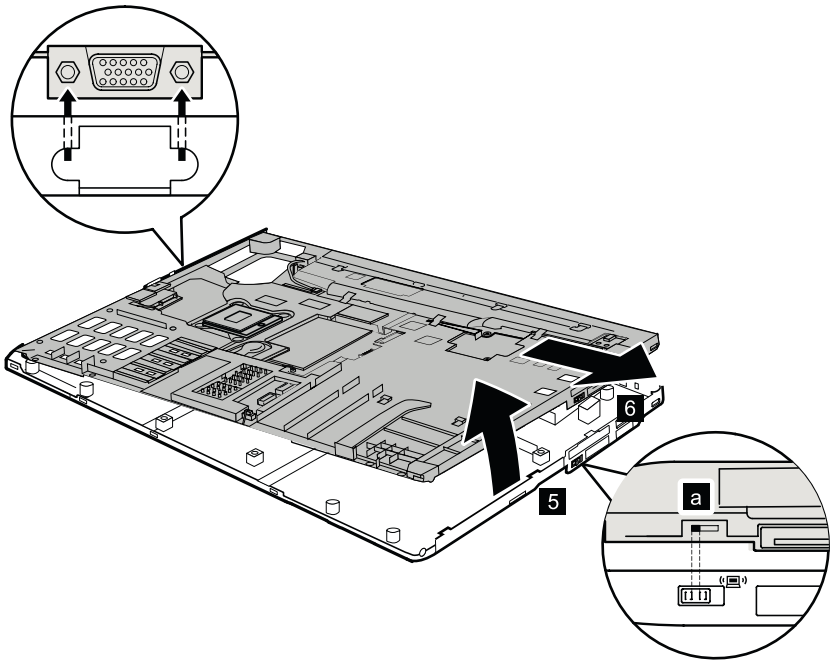

When installing: Make sure that the wireless switch is adjusted as shown in callout a.

Table 29. Removal steps of base cover assembly and DC-in connector cable (continued)

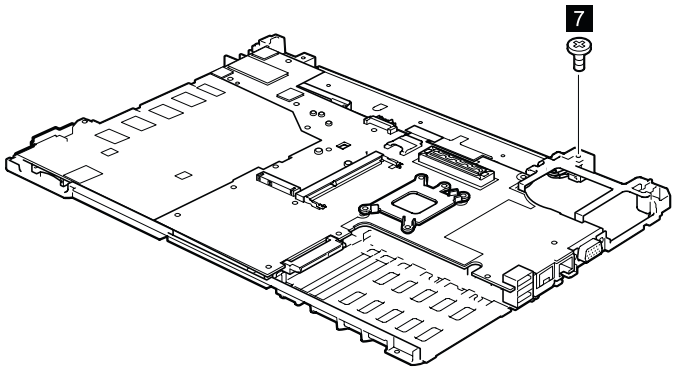

Step	Screw (quantity)	Color	Torque
7	M2 × 3 mm, wafer-head, nylon-coated (1)	Black	0.181 Nm (1.85 kgfcm)

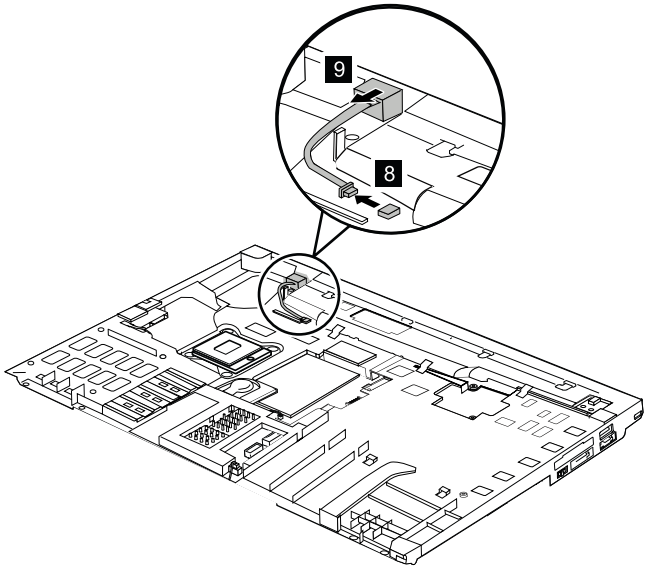

Table 29. Removal steps of base cover assembly and DC-in connector cable (continued)

Note: Applying labels to the base cover
The new base cover FRU is shipped with a kit containing labels of several kinds.

When you replace the base cover, you need to apply the following label:

17 Homologation label

The following labels need to be peeled off from the old base cover, and need to be put on the new base cover.

1 Windows Certificate of Authentication label (COA)
2 Wireless LAN MAC address label
3 Information label
4 Ethernet MAC address label
5 Wireless WAN MAC address label
6 China mobile IMEI label
7 China telecom IMEI label
8 SIRM labels (only for Malaysia)
9 Wireless card label (only for Brazil)
10 Anatel label (only for Brazil)
11 Modem AMOM label (only for Brazil)
12 *Bluetooth* label (only for Brazil)
13 Israel label (50 mm x 19 mm)
14 No MIC label (only for TAA module assembled in Mexico)
15 Vodafone label
16 FCC label
18 Asset tag
19 Serial number label
20 Product label
21 China wireless WAN label
22 China modem label

For some models, you need to apply two FCC labels. Check the old base cover; if it has two FCC labels, apply both to the new base cover.

For the location of each label, refer the following figure:

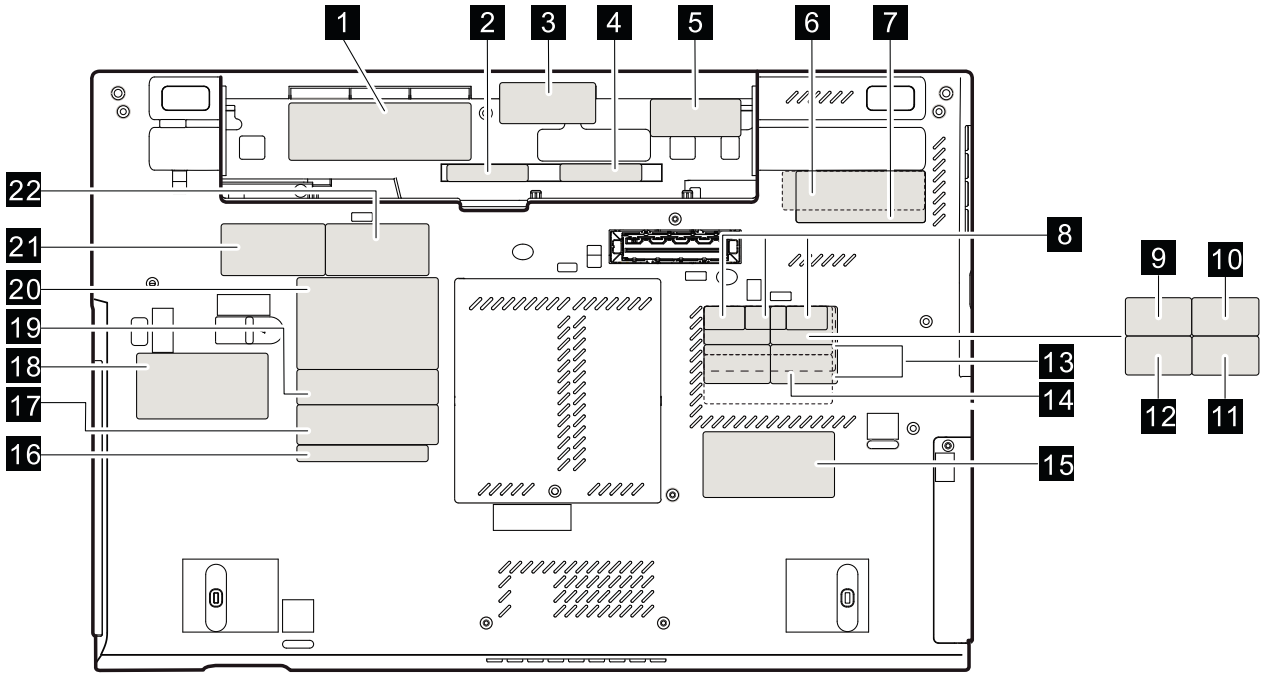

1200 Magnesium structure frame

For access, remove these FRUs in order:

- “1010 Battery pack” on page 65
- “1020 ExpressCard blank bezel” on page 66
- “1030 Serial Ultrabay Enhanced device or travel bezel” on page 67
- “1040 Hard disk drive (HDD) and solid state drive (SSD)” on page 68
- “1050 DIMM slot cover” on page 71
- “1070 PCI Express Mini Card for wireless WAN” on page 73
- “1080 Keyboard” on page 75
- “1110 PCI Express Mini Card for wireless LAN” on page 84
- “1120 Keyboard bezel assembly, FPC cable, and *Bluethooth* daughter card (BDC-2.1)” on page 86
- “1150 Speaker assembly” on page 94
- “1160 LCD unit” on page 96
- “1170 Fan assembly” on page 101
- “1180 CPU” on page 106
- “1190 Base cover assembly and DC-in connector cable” on page 107

Table 30. Removal steps of magnesium structure frame

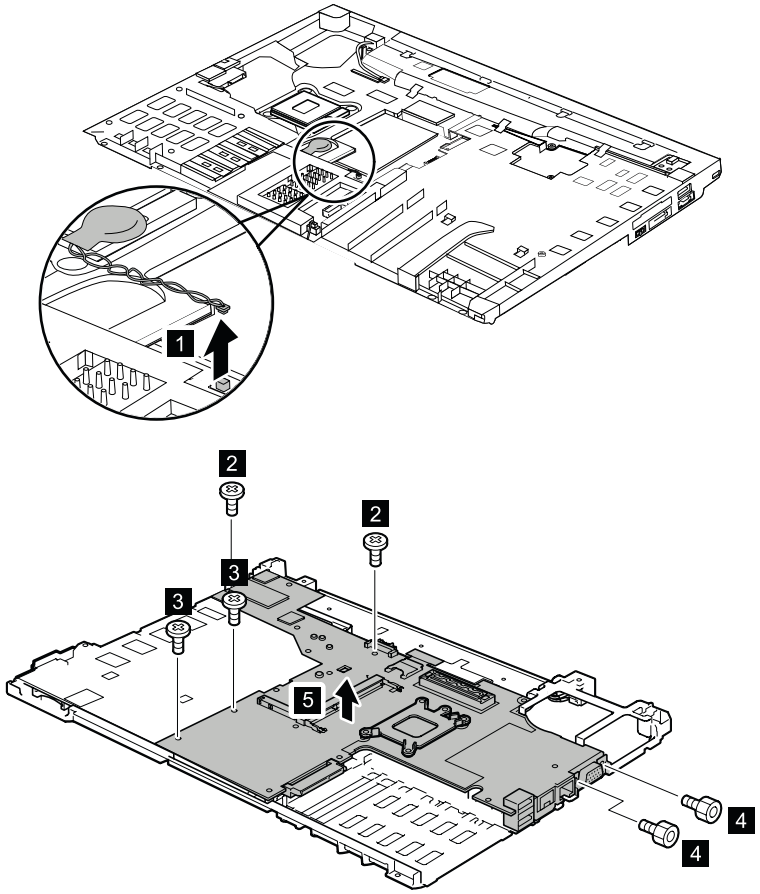

Step	Screw (quantity)	Color	Torque
2	M2 × 5 mm, wafer-head, nylon-coated (2)	Black	0.181 Nm (1.85 kgfcm)
3	M2 × 8 mm, wafer-head, nylon-coated (2)	Black	0.181 Nm (1.85 kgfcm)

Table 30. Removal steps of magnesium structure frame (continued)

4	Hex stud, nylon-coated (2)	Silver	0.392 Nm (4.0 kgfcm)

1210 System board and ExpressCard slot assembly

For access, remove these FRUs in order:

- “1010 Battery pack” on page 65
- “1020 ExpressCard blank bezel” on page 66
- “1030 Serial Ultrabay Enhanced device or travel bezel” on page 67
- “1040 Hard disk drive (HDD) and solid state drive (SSD)” on page 68
- “1050 DIMM slot cover” on page 71
- “1070 PCI Express Mini Card for wireless WAN” on page 73
- “1080 Keyboard” on page 75
- “1110 PCI Express Mini Card for wireless LAN” on page 84
- “1120 Keyboard bezel assembly, FPC cable, and *Bluethooth* daughter card (BDC-2.1)” on page 86
- “1150 Speaker assembly” on page 94
- “1160 LCD unit” on page 96
- “1170 Fan assembly” on page 101
- “1180 CPU” on page 106
- “1190 Base cover assembly and DC-in connector cable” on page 107

Important notices for handling the system board:
When handling the system board, bear the following in mind.

- The system board has an accelerometer, which can be broken by applying several thousands of G-forces.

  Note: Dropping a system board from a height of as little as 6 inches so that it falls flat on a hard bench can subject the accelerometer to as much as 6,000 G's of shock.
- Be careful not to drop the system board on a bench top that has a hard surface, such as metal, wood, or composite.
- If a system board is dropped, you must test it, using PC-Doctor for DOS, to make sure that the HDD Active Protection System™ still functions.

  Note: If the test shows that HDD Active Protection System is not functioning, be sure to document the drop in a reject report, and replace the system board.
- Avoid rough handling of any kind.
- At every point in the process, be sure not to drop or stack the system board.
- If you put a system board down, be sure to put it only on a padded surface such as an ESD mat or a corrugated conductive surface.

After replacing the system board, run PC-Doctor for DOS to make sure that HDD Active Protection System still functions. The procedure is as follows:

1. Place the computer on a horizontal surface.
2. Run **Diagnostics → ThinkPad Devices → HDD Active Protection Test**.

   Attention: Do not apply physical shock to the computer while the test is running.

Table 31. Removal steps of system board and ExpressCard slot assembly

The following components soldered on the top side of the system board are extremely sensitive. When you service the system board, avoid any kind of rough handling.

Table 31. Removal steps of system board and ExpressCard slot assembly (continued)

a CPU

b Accelerometer chip for the HDD Active Protection System

c Platform Controller Hub (PCH)

d Graphic Processing Unit (GPU) (Discrete graphics chip)

Note: The GPU d is only for models with switchable graphics. Models with integrated graphics do not have a GPU on the system board.

For Switchable Graphics models:

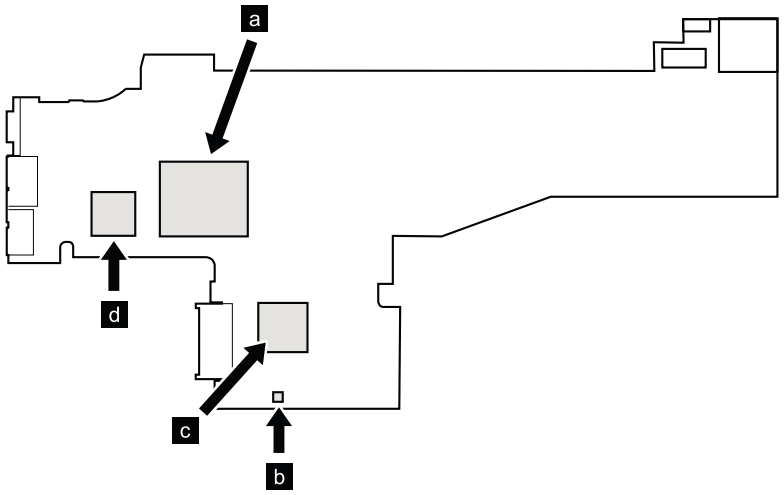

For Integrated Graphics models:

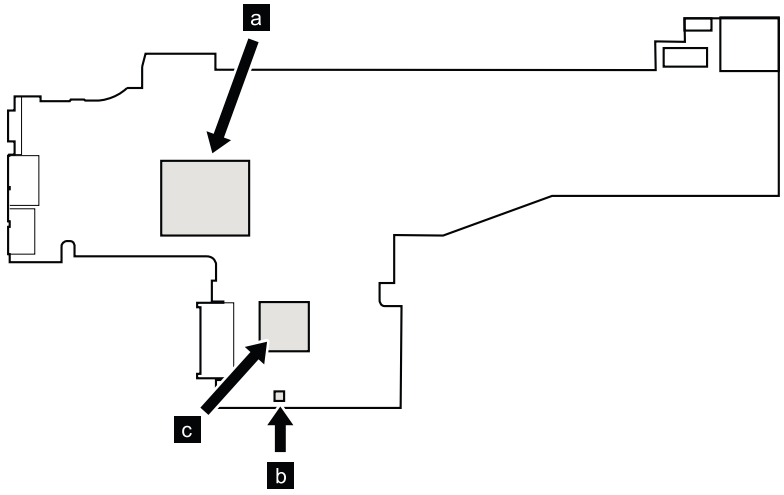

Table 31. Removal steps of system board and ExpressCard slot assembly (continued)

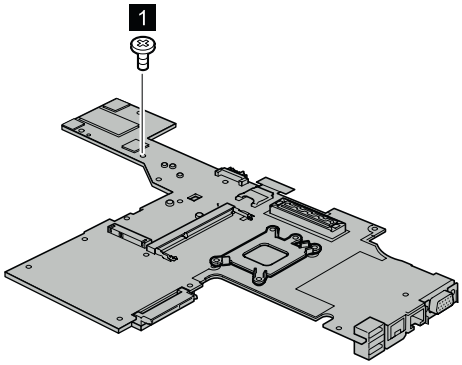

Step	Screw (quantity)	Color	Torque
1	M2 × 3 mm, wafer-head, nylon-coated (1)	Black	0.181 Nm (1.85 kgfcm)

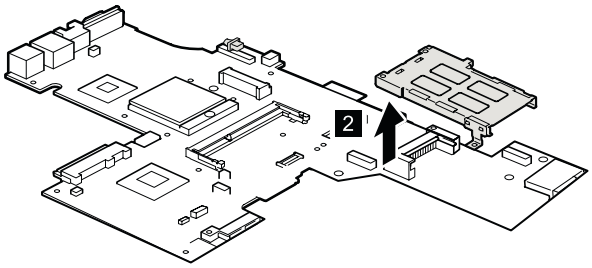

When installing: Make sure that the connector is attached firmly.

2010 LCD bezel assembly

For access, remove the following FRU:

- “1010 Battery pack” on page 65

Table 32. Removal steps of LCD bezel assembly

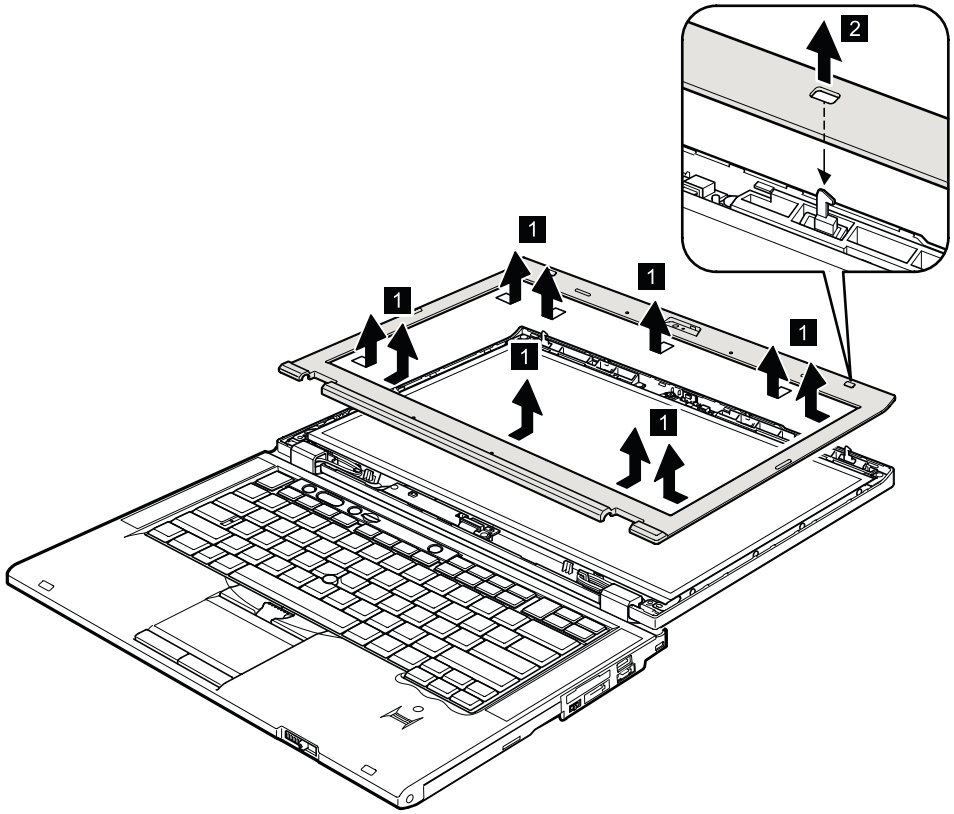

2020 LED board

For access, remove these FRUs in order:
- “1010 Battery pack” on page 65
- “2010 LCD bezel assembly” on page 117

Table 33. Removal steps of LED board

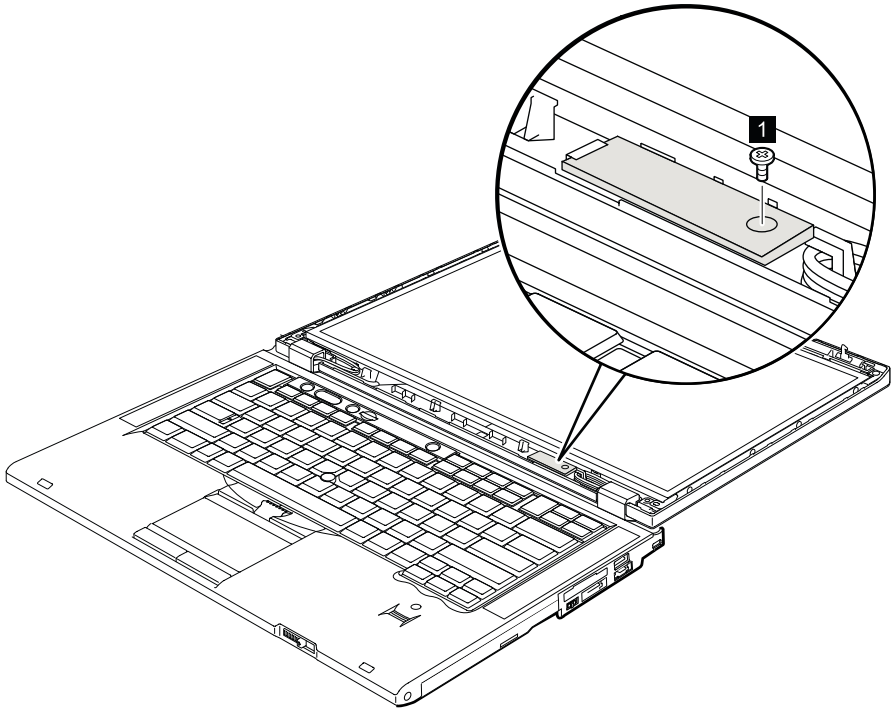

Step	Screw (quantity)	Color	Torque
1	M2 × 3 mm, flat-head, nylon-coated (1)	Silver	0.181 Nm (1.85 kgfcm)

Table 33. Removal steps of LED board (continued)

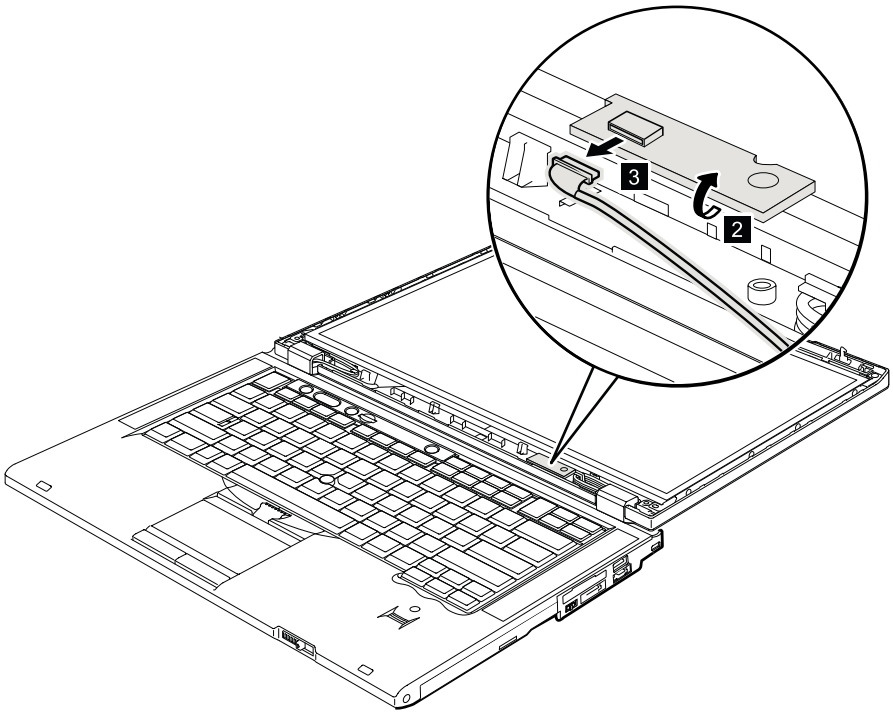

When installing: Make sure that the connector is attached firmly.

2030 Integrated camera

For access, remove these FRUs in order:
- “1010 Battery pack” on page 65
- “2010 LCD bezel assembly” on page 117

Table 34. Removal steps of integrated camera

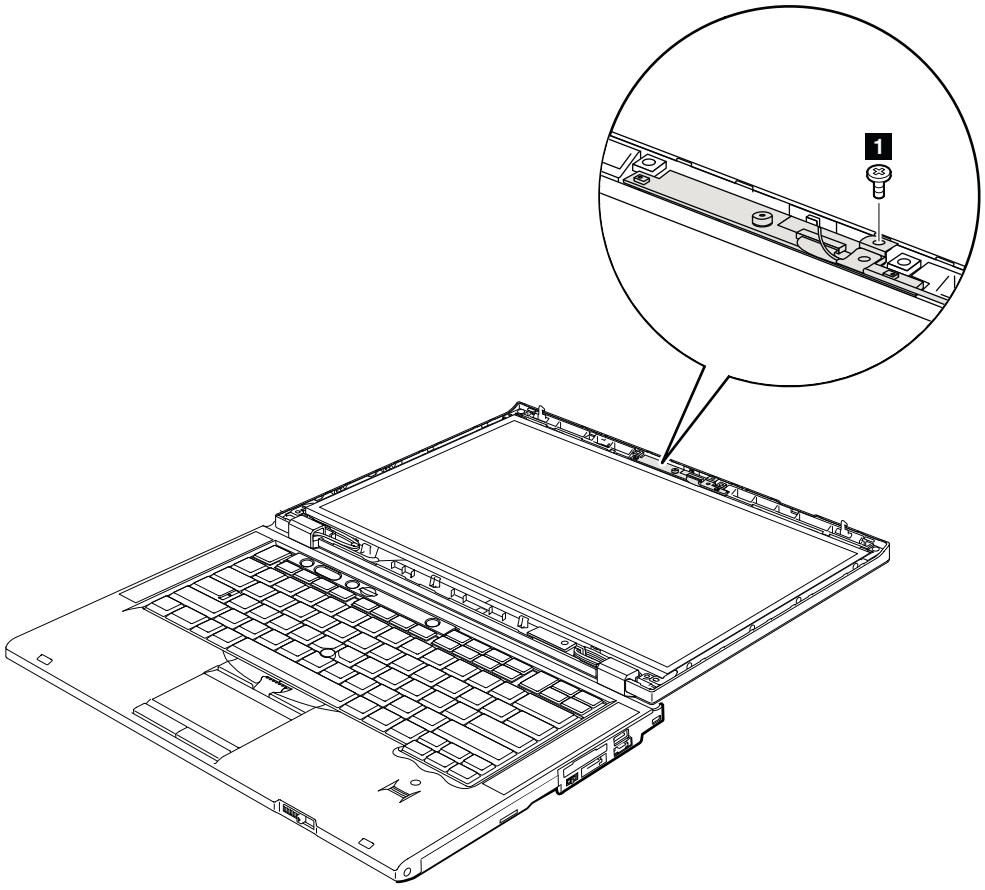

Step	Screw (quantity)	Color	Torque
1	M2 × 3 mm, flat-head, nylon-coated (1)	Black	0.181 Nm (1.85 kgfcm)

Table 34. Removal steps of integrated camera (continued)

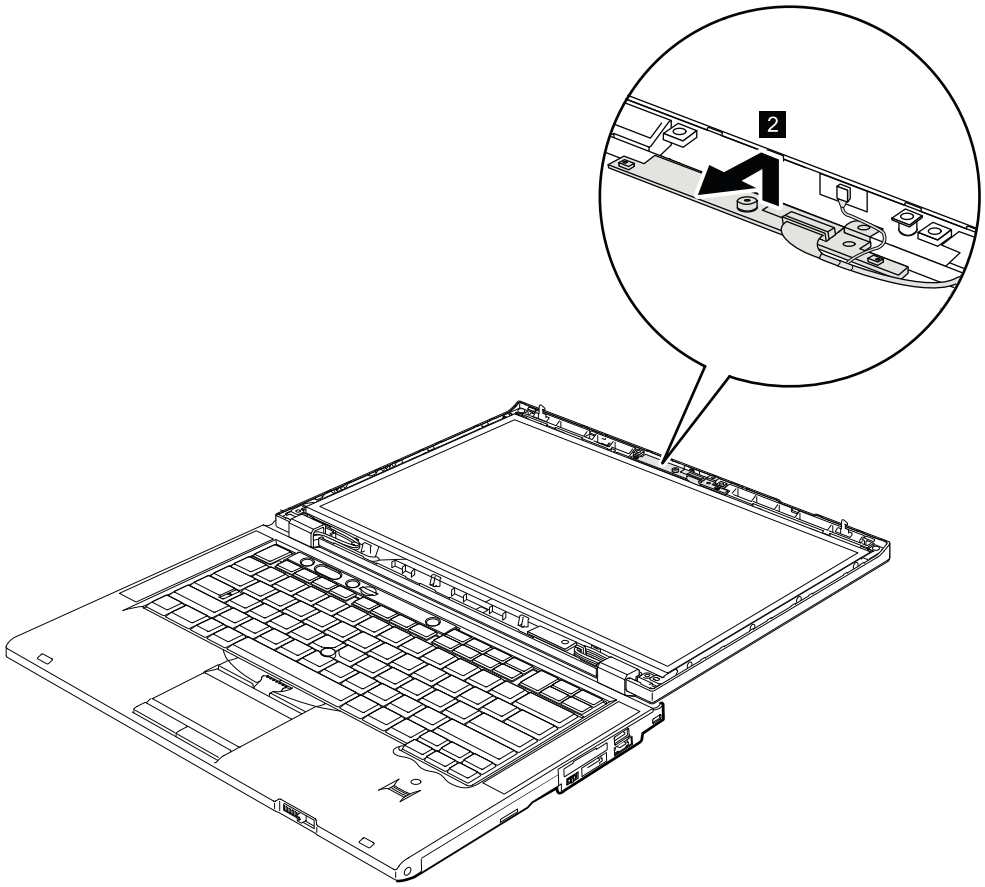

2040 LCD panel and LCD cable

For access, remove these FRUs in order:

- “1010 Battery pack” on page 65
- “1020 ExpressCard blank bezel” on page 66
- “1050 DIMM slot cover” on page 71
- “1070 PCI Express Mini Card for wireless WAN” on page 73
- “1080 Keyboard” on page 75
- “1110 PCI Express Mini Card for wireless LAN” on page 84
- “1120 Keyboard bezel assembly, FPC cable, and *Bluethooth* daughter card (BDC-2.1)” on page 86
- “1150 Speaker assembly” on page 94
- “1160 LCD unit” on page 96
- “2010 LCD bezel assembly” on page 117
- “2020 LED board” on page 118
- “2030 Integrated camera” on page 120

Table 35. Removal steps of LCD panel and LCD cable

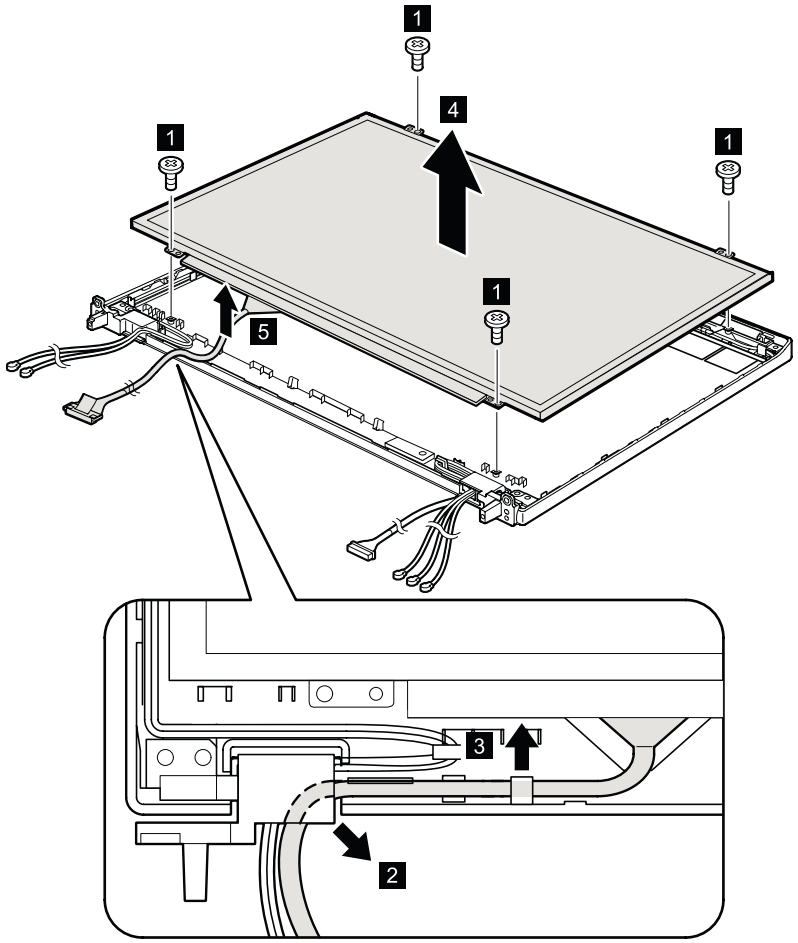

Step	Screw (quantity)	Color	Torque
1	M2 × 3 mm, wafer-head, nylon-coated (4)	Black	0.181 Nm (1.85 kgfcm)

Table 35. Removal steps of LCD panel and LCD cable (continued)

When installing: When attaching the LCD panel to the cover, gently press the left and right edges covered with metal. DO not press the surface of the panel or apply any excessive force to the panel.

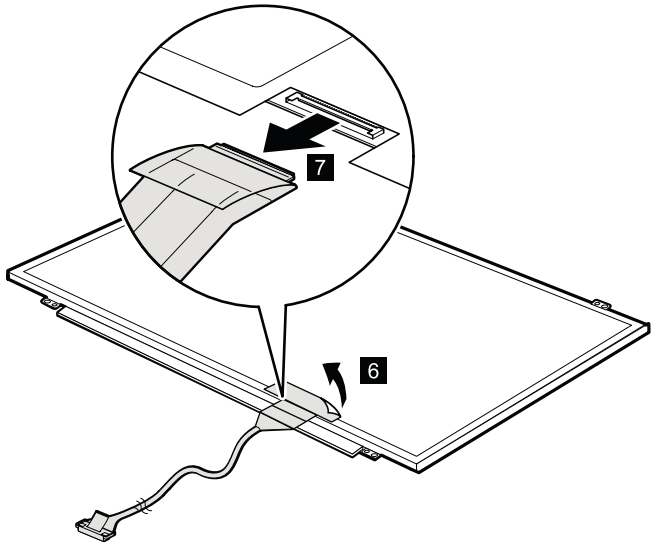

When installing: Make sure that the connector is attached firmly.

2050 Camera cable

For access, remove these FRUs in order:

- “1010 Battery pack” on page 65
- “1020 ExpressCard blank bezel” on page 66
- “1050 DIMM slot cover” on page 71
- “1070 PCI Express Mini Card for wireless WAN” on page 73
- “1080 Keyboard” on page 75
- “1110 PCI Express Mini Card for wireless LAN” on page 84
- “1120 Keyboard bezel assembly, FPC cable, and *Bluethooth* daughter card (BDC-2.1)” on page 86
- “1150 Speaker assembly” on page 94
- “1160 LCD unit” on page 96
- “2010 LCD bezel assembly” on page 117
- “2020 LED board” on page 118
- “2030 Integrated camera” on page 120
- “2040 LCD panel and LCD cable” on page 122

Table 36. Removal steps of camera cable

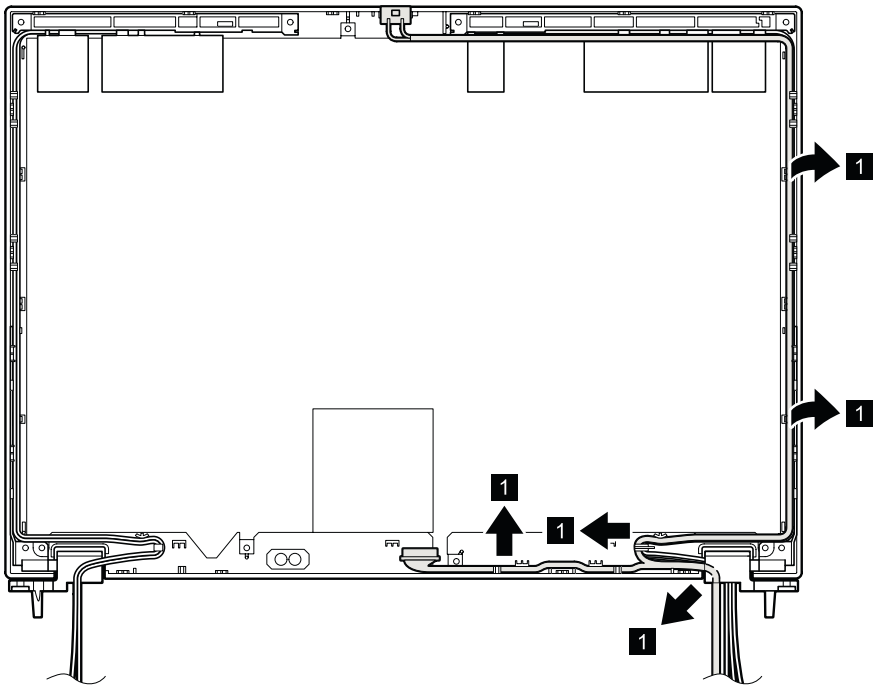

2060 Wireless LAN antenna assembly or wireless LAN/WAN antenna assembly

For access, remove these FRUs in order:

- “1010 Battery pack” on page 65
- “1020 ExpressCard blank bezel” on page 66
- “1050 DIMM slot cover” on page 71
- “1070 PCI Express Mini Card for wireless WAN” on page 73
- “1080 Keyboard” on page 75
- “1110 PCI Express Mini Card for wireless LAN” on page 84
- “1120 Keyboard bezel assembly, FPC cable, and *Bluethooth* daughter card (BDC-2.1)” on page 86
- “1150 Speaker assembly” on page 94
- “1160 LCD unit” on page 96
- “2010 LCD bezel assembly” on page 117
- “2020 LED board” on page 118
- “2030 Integrated camera” on page 120
- “2040 LCD panel and LCD cable” on page 122
- “2050 Camera cable” on page 124

Table 37. Removal steps of wireless LAN antenna assembly or wireless LAN/WAN antenna assembly

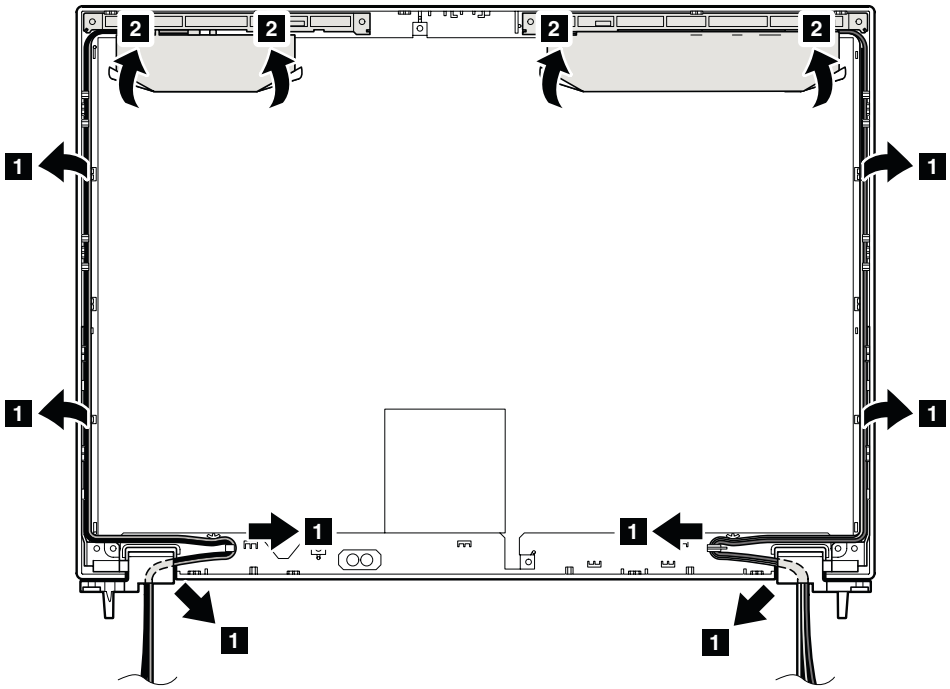

When installing: When you install the antenna kit, route the cables as shown in the figure above. As you route the cables, make sure that they are not subjected to any tension. Tension could cause the cables to be damaged by the cable guides, or a wire to be broken.

Table 37. Removal steps of wireless LAN antenna assembly or wireless LAN/WAN antenna assembly (continued)

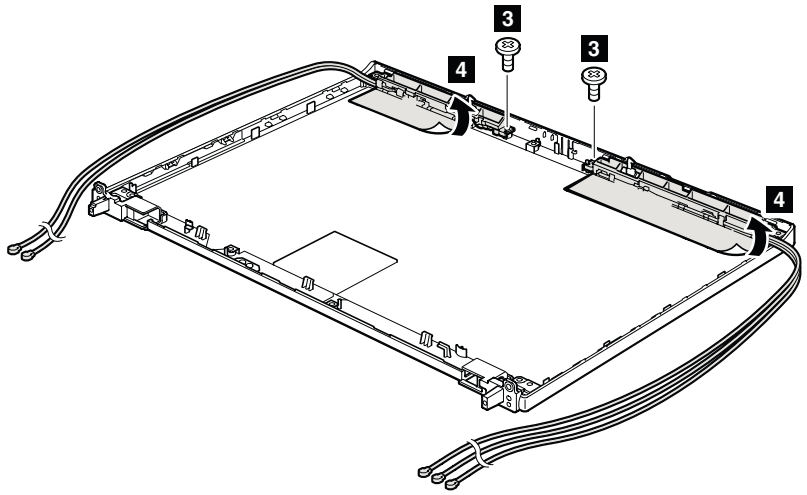

Step	Screw (quantity)	Color	Torque
3	M2 × 3 mm, flat-head, nylon-coated (2)	Black	0.181 Nm (1.85 kgfcm)

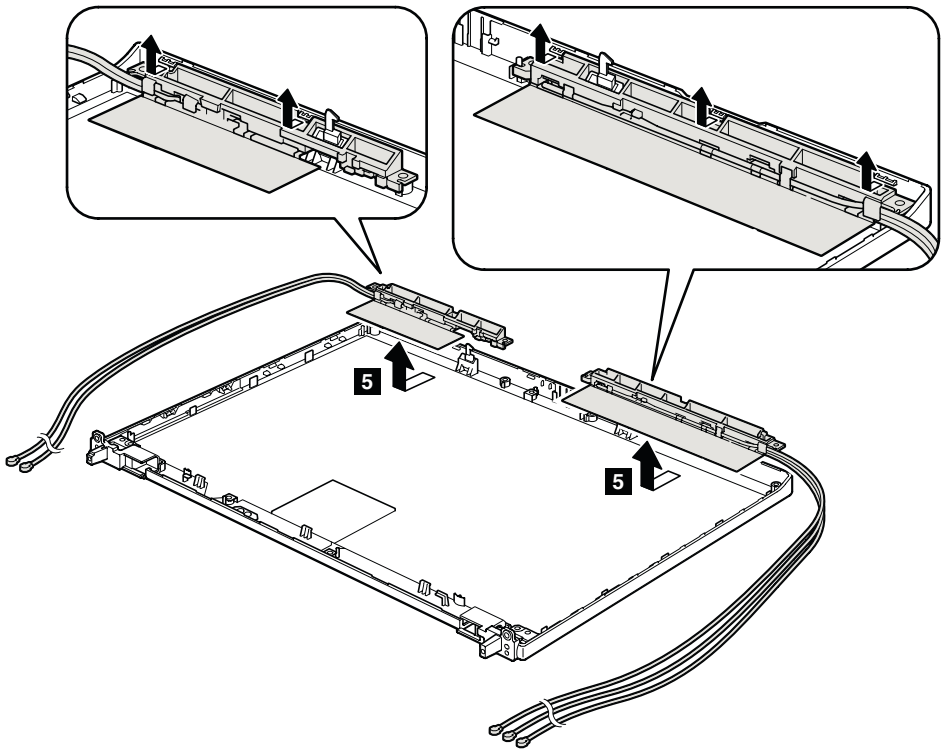

2070 Hinges and LCD rear cover assembly

For access, remove these FRUs in order:

- “1010 Battery pack” on page 65
- “1020 ExpressCard blank bezel” on page 66
- “1050 DIMM slot cover” on page 71
- “1070 PCI Express Mini Card for wireless WAN” on page 73
- “1080 Keyboard” on page 75
- “1110 PCI Express Mini Card for wireless LAN” on page 84
- “1120 Keyboard bezel assembly, FPC cable, and *Bluethooth* daughter card (BDC-2.1)” on page 86
- “1150 Speaker assembly” on page 94
- “1160 LCD unit” on page 96
- “2010 LCD bezel assembly” on page 117
- “2020 LED board” on page 118
- “2030 Integrated camera” on page 120
- “2040 LCD panel and LCD cable” on page 122
- “2050 Camera cable” on page 124
- “2060 Wireless LAN antenna assembly or wireless LAN/WAN antenna assembly” on page 125

Table 38. Removal steps of hinges and LCD rear cover assembly

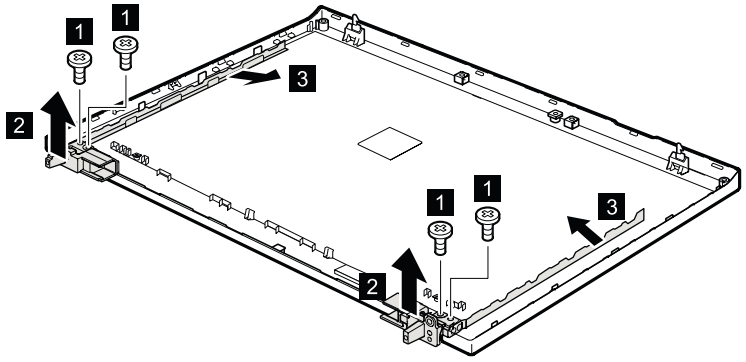

Step	Screw (quantity)	Color	Torque
1	M2.5 × 4 mm, wafer-head, nylon-coated (4)	Black	0.392 Nm (4.0 kgfcm)

When installing: Attach the hinges as shown in the following figure.

Table 38. Removal steps of hinges and LCD rear cover assembly (continued)

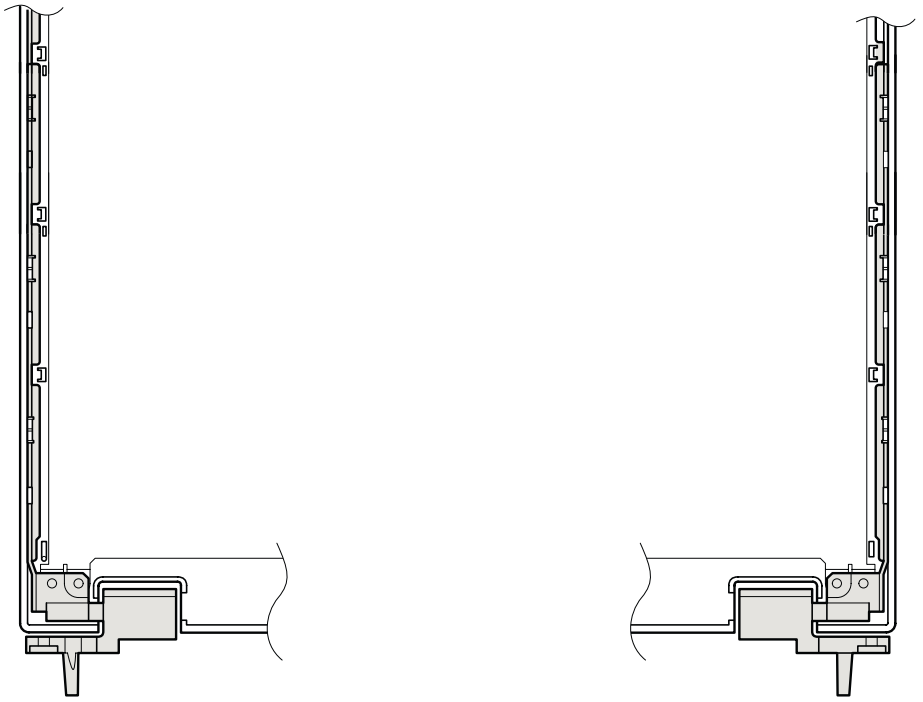

Chapter 9. Locations

This chapter presents the locations of ThinkPad T420 and T420i hardware components.

Front view

1. Integrated camera (for some models)
2. ThinkLight
3. Built-in microphone
4. Built-in speakers
5. Security keyhole
6. Universal serial bus (USB)/eSATA combo connector
7. USB connector
8. Media Card Reader slot
9. ExpressCard slot
10. Serial Ultrabay Enhanced drive or travel bezel
11. Combo audio jack
12. Fingerprint reader
13. Touch pad buttons
14. Touch pad
15. TrackPoint buttons
16. TrackPoint pointing stick
17. UltraNav
18. Volume control buttons
19. ThinkVantage button
20. Power switch
21. Status indicators

Note: For the description of each indicator, see Chapter 5 “Status indicators” on page 51.

© Copyright Lenovo 2011

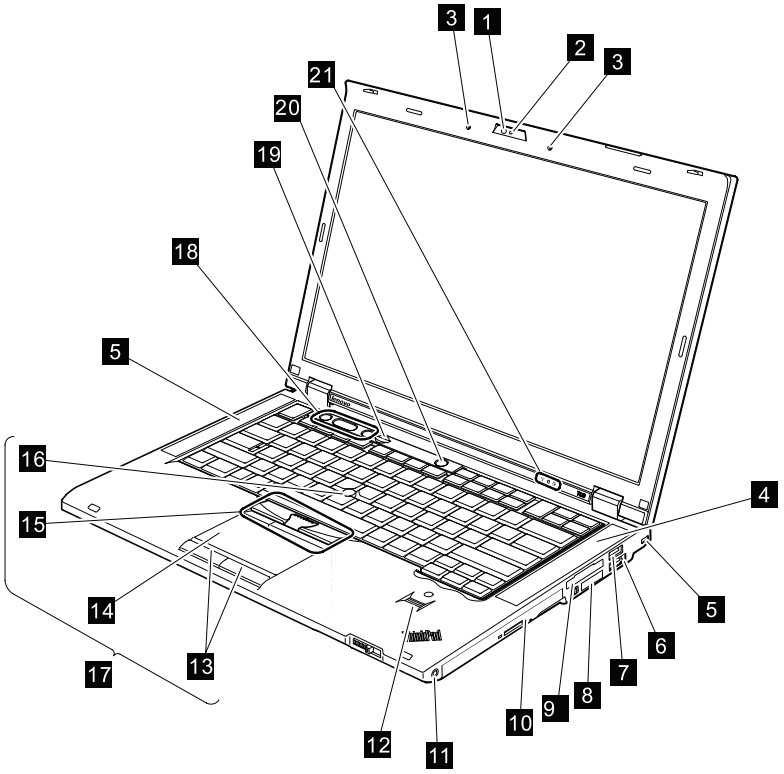
3
1
2
3
21
20
19
18
5
16
15
14
17
13
12
11
10
9
8
7
6
5
4

Rear view

1 Status indicators

Note: For the description of each indicator, see Chapter 5 “Status indicators” on page 51.

2 SmartCard slot

3 DisplayPort connector

4 USB connector

5 RJ-45 (Ethernet) connector

6 External monitor connector

7 Power jack

8 USB connector

9 Modem connector or IEEE 1394

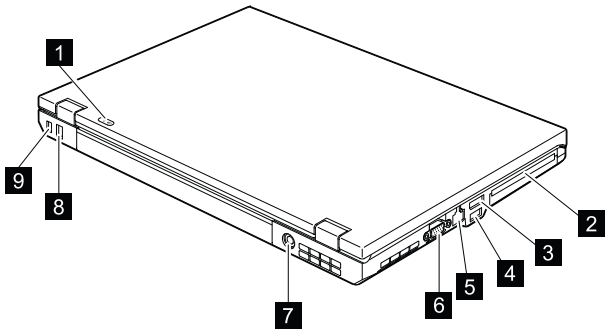

Bottom view

1 Battery pack
2 Battery pack latch
3 DIMM slot
4 Docking connector
5 LCD cover latch
6 Serial Ultrabay Enhanced lock latch
7 Serial Ultrabay Enhanced eject latch

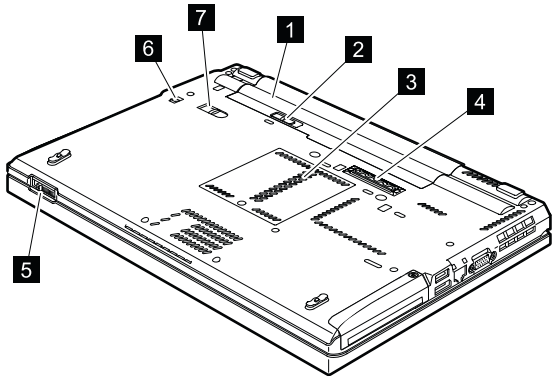

Chapter 10. Parts list

This chapter contains following lists of the service parts.

- “Overall” on page 134
- “LCD FRUs” on page 154
- “Keyboard” on page 166
- “Miscellaneous parts” on page 167
- “Information about ac power adapters” on page 170
- “Power cords” on page 171
- “Recovery discs” on page 172
- “Common service tools” on page 178

Notes:

- Each FRU is available for all types or models, unless specific types or models are specified.
- FRU with specific models listed and described as xxU (where U is an example of a country designator) should be used for all models ending in U.
- FRU with specific models listed and described as 3Dx (where 3D is an example of a unique configuration) should be used for all of these models, unless specific country or region designator is specified.
- A CRU (customer replaceable unit) is identified by a single asterisk (*) or two asterisks (**) in the CRU ID column. An N in the CRU ID column means that the part is not a CRU. A single asterisk (*) means that the part is a Self-service CRU; two asterisks (**) means that the part is an Optional-service CRU. ThinkPad Notebooks contain the following types of CRUs:

  Self-service CRUs

  These CRUs unplug or are held by no more than two screws. Examples of these types of CRUs include an ac power adapter, a power cord, a battery, and a hard disk drive. Other Self-service CRUs depending on product design may include a memory, a wireless card, a keyboard, and a palm rest with finger print reader and touchpad.

  Optional-service CRUs

  These CRUs are isolated parts within the computer that are concealed by an access panel that is typically secured by more than two screws. Once the access panel is removed, the specific CRU is visible.

- FRUs marked with **OP** are available as options.

© Copyright Lenovo 2011

Overall

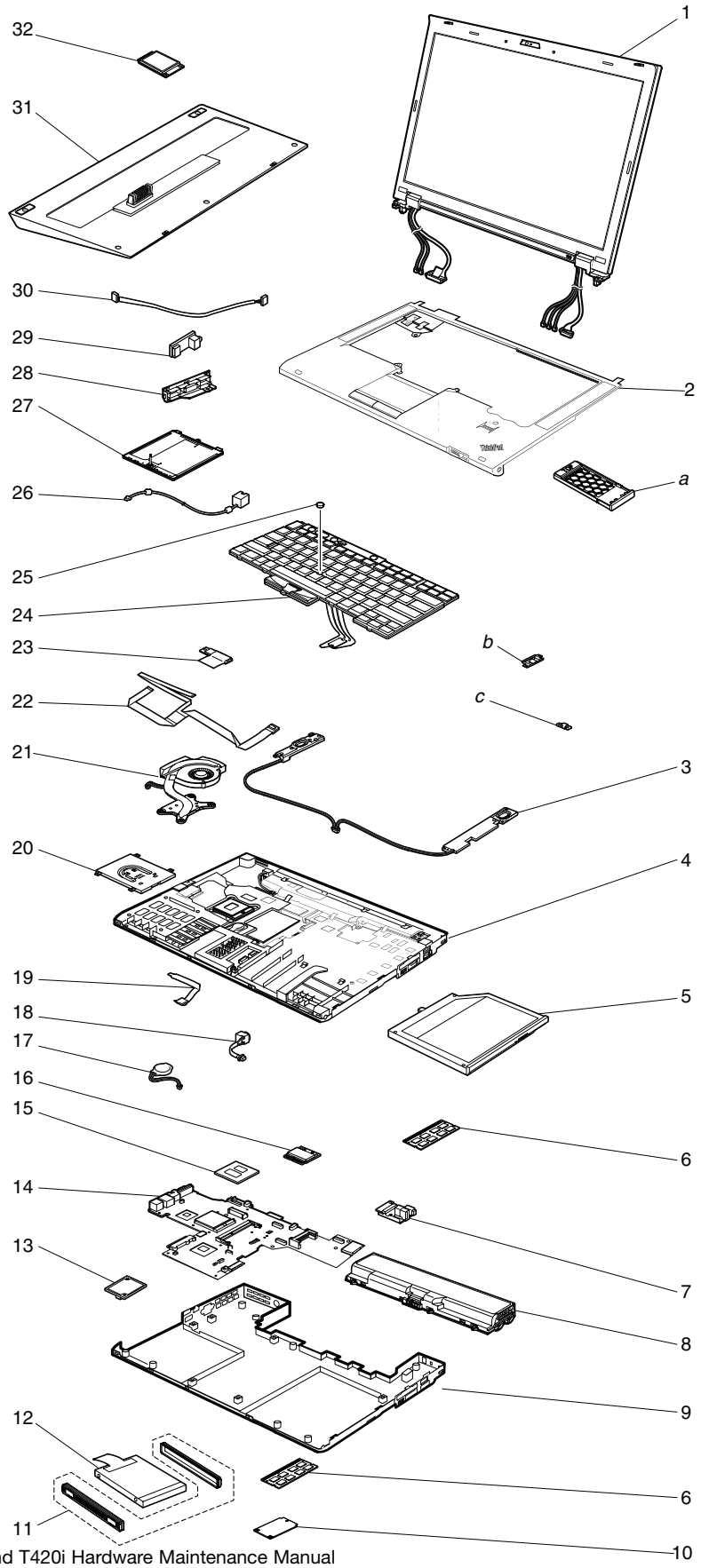
1
32
31
30
29
28
27
26
25
24
23
22
21
20
19
18
17
16
15
14
13
12
11
2
a
b
c
3
4
5
6
7
8
9
6
10

Table 39. Parts list—Overall

No.	FRU (Overall)	FRU no.	CRU ID
a - g	See “Miscellaneous parts” on page 167.		
1	LCD unit (see “LCD FRUs” on page 154.)		
2	Keyboard bezel assembly without fingerprint reader • 4177-CTO, 25x, 26x, 28x, Q5x, QDx, QFx • 4178-CTO, 56x, 57x, 58x, 59x, 9Fx, 9Gx, 9Hx, 9Nx, 9Rx • 4179-CTO, G2x • 4180-CTO, 62x, 64x, LEx, LFx, LGx, LHx, LJx, LKx, LLx, LMx, M9x • 4236-CTO, 62x, 64x, 65x, N6x, N7x	04W1372	N
2	Keyboard bezel assembly with fingerprint reader • 4177-CTO, 22x, 23x, 24x, 27x, 29x, 2Ax, 2Bx, 2Cx, 2Dx, 2Ex, 2Fx, 2Gx, 2Hx, 2Jx, 2Kx, 2Lx, 2Mx, 2Nx, 2Px, Q2x, Q3x, Q4x, Q7x, Q8x, QAx, QBx, QCx, QEx • 4178-CTO, 52x, 53x, 54x, 55x, 5Ax, 5Bx, 5Cx, 5Dx, 5Ex, 5Fx, 5Gx, 5Hx, 5Jx, 5Kx, 5Lx, 5Mx, 5Nx, 5Px, 5Qx, 5Rx, 5Sx, 5Tx, 5Ux, 5Vx, 5Wx, 5Xx, 5Yx, 5Zx, 92x, 93x, 94x, 95x, 96x, 97x, 98x, 99x, 9Ax, 9Bx, 9Cx, 9Dx, 9Ex, 9Jx, 9Kx, 9Lx, 9Mx, 9Px, 9Qx, 9Sx, 9Tx, 9Ux, 9Vx, 9Wx, 9Xx, 9Yx • 4179-CTO, G3x, G4x, G5x, G6x, G7x, G8x, G9x, GBx • 4180-CTO, 63x, 65x, K2x, K3x, K4x, K5x, K6x, K7x, K8x, K9x, KAx, KBx, KCx, KDx, KEx, KFx, KGx, KHx, KJx, KKx, KLx, KMx, KNx, KPx, KQx, KRx, KSx, KTx, KUx, KVx, KWx, KXx, KYx, KZx, L2x, L3x, L4x, L5x, L6x, L7x, L8x, L9x, LAx, LBx, LCx, LDx, LNx, LPx, LQx, LRx, LSx, LTx, LUx, LVx, LWx, LXx, LYx, LZx, M2x, M3x, M4x, M5x, M6x, M7x, M8x, MAx, MBx, MCx, MDx, MEx, MFx, MGx, MHx, MJx • 4236-CTO, 63x, N2x, N3x, N4x, N5x, N8x, N9x, NAx, NBx, NCx, NDx, NEx, NFx, NGx, NHx, NKx, NLx, NMx, NNx, NPx, NQx, NRx, MBx	04W1371	N
3	Speaker assembly	04W1633	N
3	Speaker assembly	04W1634	N
4	Magnesium structure frame assembly	04W1629	N
5	DVD-RAM/RW drive • 4177–CTO, 22x, 23x, 24x, 25x, 26x, 27x, 28x, 29x, 2Ax, 2Bx, 2Cx, 2Dx, 2Ex, 2Fx, 2Gx, 2Hx, 2Jx, 2Kx, 2Lx, 2Mx, 2Nx, 2Px, Q2x, Q3x, Q4x, Q5x, Q8x, QAx, QBx, QCx, QEx • 4178–CTO, 52x, 53x, 54x, 55x, 56x, 57x, 58x, 59x, 5Ax, 5Bx, 5Cx, 5Dx, 5Ex, 5Fx, 5Gx, 5Hx, 5Jx, 5Kx, 5Lx, 5Mx, 5Nx, 5Px, 5Qx, 5Rx, 5Sx, 5Tx, 5Ux, 5Vx, 5Wx, 5Xx, 5Yx, 5Zx, 92x, 93x, 94x, 95x, 96x, 97x, 98x, 99x, 9Ax, 9Bx, 9Cx, 9Dx, 9Ex, 9Fx, 9Gx, 9Hx, 9Jx, 9Kx, 9Lx, 9Mx, 9Nx, 9Px, 9Qx, 9Rx, 9Sx, 9Tx, 9Ux, 9Vx, 9Wx, 9Xx, 9Yx • 4179–CTO, G2x, G3x, G4x, G5x, G6x, G7x, G8x, G9x, GBx • 4180–CTO, 62x, 63x, 64x, 65x, K2x, K3x, K4x, K5x, K6x, K7x, K8x, K9x, KAx, KBx, KCx, KDx, KEx, KFx, KGx, KHx, KJx, KKx, KLx, KMx, KNx, KPx, KQx, KRx, KSx, KTx, KUx, KVx, KWx, KXx, KYx, KZx, L2x, L3x, L4x, L5x, L6x, L7x, L8x, L9x, LAx, LBx, LCx, LDx, LEx, LFx, LGx, LHx, LJx, LKx, LLx, LMx, LNx, LRx, LSx, LTx, LUx, LVx, LWx, LXx, LYx, LZx, M2x, M3x, M4x, M5x, M6x, M7x, M8x, M9x, MAx, MBx, MCx, MDx, MEx, MFx, MGx, MHx, MJx • 4236–CTO, 62x, 63x, 64x, 65x, N2x, N3x, N4x, N5x, N6x, N7x, N8x, N9x, NAx, NBx, NCx, NFx, NGx, NHx, NKx, NLx, NMx, NNx, NPx, NQx, NRx, MBx	75Y5115	*

Table 39. Parts list—Overall (continued)

No.	FRU (Overall)	FRU no.	CRU ID
5	DVD-RAM/RW drive • 4177–CTO, 22x, 23x, 24x, 25x, 26x, 27x, 28x, 29x, 2Ax, 2Bx, 2Cx, 2Dx, 2Ex, 2Fx, 2Gx, 2Hx, 2Jx, 2Kx, 2Lx, 2Mx, 2Nx, 2Px, Q2x, Q3x, Q4x, Q5x, Q8x, QAx, QBx, QCx, QEx • 4178–CTO, 52x, 53x, 54x, 55x, 56x, 57x, 58x, 59x, 5Ax, 5Bx, 5Cx, 5Dx, 5Ex, 5Fx, 5Gx, 5Hx, 5Jx, 5Kx, 5Lx, 5Mx, 5Nx, 5Px, 5Qx, 5Rx, 5Sx, 5Tx, 5Ux, 5Vx, 5Wx, 5Xx, 5Yx, 5Zx, 92x, 93x, 94x, 95x, 96x, 97x, 98x, 99x, 9Ax, 9Bx, 9Cx, 9Dx, 9Ex, 9Fx, 9Gx, 9Hx, 9Jx, 9Kx, 9Lx, 9Mx, 9Nx, 9Px, 9Qx, 9Rx, 9Sx, 9Tx, 9Ux, 9Vx, 9Wx, 9Xx, 9Yx • 4179–CTO, G2x, G3x, G4x, G5x, G6x, G7x, G8x, G9x, GBx • 4180–CTO, 62x, 63x, 64x, 65x, K2x, K3x, K4x, K5x, K6x, K7x, K8x, K9x, KAx, KBx, KCx, KDx, KEx, KFx, KGx, KHx, KJx, KKx, KLx, KMx, KNx, KPx, KQx, KRx, KSx, KTx, KUx, KVx, KWx, KXx, KYx, KZx, L2x, L3x, L4x, L5x, L6x, L7x, L8x, L9x, LAx, LBx, LCx, LDx, LEx, LFx, LGx, LHx, LJx, LKx, LLx, LMx, LNx, LRx, LSx, LTx, LUx, LVx, LWx, LXx, LYx, LZx, M2x, M3x, M4x, M5x, M6x, M7x, M8x, M9x, MAx, MBx, MCx, MDx, MEx, MFx, MGx, MHx, MJx • 4236–CTO, 62x, 63x, 64x, 65x, N2x, N3x, N4x, N5x, N6x, N7x, N8x, N9x, NAx, NBx, NCx, NFx, NGx, NHx, NKx, NLx, NMx, NNx, NPx, NQx, NRx, MBx	75Y5113	*
5	DVD-RAM/RW drive • 4177–CTO, 22x, 23x, 24x, 25x, 26x, 27x, 28x, 29x, 2Ax, 2Bx, 2Cx, 2Dx, 2Ex, 2Fx, 2Gx, 2Hx, 2Jx, 2Kx, 2Lx, 2Mx, 2Nx, 2Px, Q2x, Q3x, Q4x, Q5x, Q8x, QAx, QBx, QCx, QEx • 4178–CTO, 52x, 53x, 54x, 55x, 56x, 57x, 58x, 59x, 5Ax, 5Bx, 5Cx, 5Dx, 5Ex, 5Fx, 5Gx, 5Hx, 5Jx, 5Kx, 5Lx, 5Mx, 5Nx, 5Px, 5Qx, 5Rx, 5Sx, 5Tx, 5Ux, 5Vx, 5Wx, 5Xx, 5Yx, 5Zx, 92x, 93x, 94x, 95x, 96x, 97x, 98x, 99x, 9Ax, 9Bx, 9Cx, 9Dx, 9Ex, 9Fx, 9Gx, 9Hx, 9Jx, 9Kx, 9Lx, 9Mx, 9Nx, 9Px, 9Qx, 9Rx, 9Sx, 9Tx, 9Ux, 9Vx, 9Wx, 9Xx, 9Yx • 4179–CTO, G2x, G3x, G4x, G5x, G6x, G7x, G8x, G9x, GBx • 4180–CTO, 62x, 63x, 64x, 65x, K2x, K3x, K4x, K5x, K6x, K7x, K8x, K9x, KAx, KBx, KCx, KDx, KEx, KFx, KGx, KHx, KJx, KKx, KLx, KMx, KNx, KPx, KQx, KRx, KSx, KTx, KUx, KVx, KWx, KXx, KYx, KZx, L2x, L3x, L4x, L5x, L6x, L7x, L8x, L9x, LAx, LBx, LCx, LDx, LEx, LFx, LGx, LHx, LJx, LKx, LLx, LMx, LNx, LRx, LSx, LTx, LUx, LVx, LWx, LXx, LYx, LZx, M2x, M3x, M4x, M5x, M6x, M7x, M8x, M9x, MAx, MBx, MCx, MDx, MEx, MFx, MGx, MHx, MJx • 4236–CTO, 62x, 63x, 64x, 65x, N2x, N3x, N4x, N5x, N6x, N7x, N8x, N9x, NAx, NBx, NCx, NFx, NGx, NHx, NKx, NLx, NMx, NNx, NPx, NQx, NRx, MBx	75Y5111	*
5	DVD-ROM drive • 4177–CTO • 4178–CTO • 4179–CTO • 4180–CTO • 4236–CTO	75Y5117	*
5	Travel cover • 4177–CTO, Q7x, QDx, QFx • 4178–CTO • 4179–CTO • 4180–CTO, LPx, LQx • 4236–CTO, NDx, NEx	60Y5512	*

Table 39. Parts list—Overall (continued)

No.	FRU (Overall)	FRU no.	CRU ID
6	1-GB DDR3-1333 SDRAM SO-DIMM (PC3-10600) card • 4177–CTO, 22x, 23x, 24x, 25x, 26x, 27x, 28x, 29x, 2Ax, 2Bx, 2Cx, 2Dx, 2Ex, 2Fx, 2Gx, 2Hx, 2Jx, 2Kx, 2Lx, 2Mx, 2Nx, 2Px, Q2x, Q3x, Q4x, Q5x, Q7x, Q8x, QAx, QBx, QCx, QDx • 4178–CTO, 52x, 53x, 54x, 55x, 56x, 57x, 58x, 59x, 5Ax, 5Bx, 5Cx, 5Dx, 5Ex, 5Fx, 5Gx, 5Hx, 5Jx, 5Kx, 5Lx, 5Mx, 5Nx, 5Px, 5Qx, 5Rx, 5Sx, 5Tx, 5Ux, 5Vx, 5Wx, 5Xx, 5Yx, 5Zx, 92x, 93x, 94x, 95x, 96x, 97x, 98x, 99x, 9Ax, 9Bx, 9Cx, 9Dx, 9Ex, 9Fx, 9Gx, 9Hx, 9Jx, 9Kx, 9Lx, 9Mx, 9Nx, 9Px, 9Qx, 9Rx, 9Sx, 9Tx, 9Ux, 9Vx, 9Wx, 9Xx, 9Yx • 4179–CTO, G2x, G3x, G4x, G5x, G6x, G7x, G8x, G9x, GBx • 4180–CTO, 62x, 63x, 64x, 65x, K2x, K3x, K4x, K5x, K6x, K7x, K8x, K9x, KAx, KBx, KCx, KDx, KEx, KFx, KGx, KHx, KJx, KKx, KLx, KMx, KNx, KPx, KQx, KRx, KSx, KTx, KUx, KVx, KWx, KXx, KYx, KZx, L2x, L3x, L4x, L5x, L6x, L7x, L8x, L9x, LAx, LBx, LCx, LDx, LEx, LFx, LGx, LHx, LJx, LKx, LLx, LMx, LNx, LPx, LQx, LRx, LSx, LTx, LUx, LVx, LWx, LXx, LYx, LZx, M2x, M3x, M4x, M5x, M6x, M7x, M8x, M9x, MAx, MBx, MCx, MDx, MEx, MFx, MGx, MHx, MJx • 4236–CTO, 62x, 63x, 64x, 65x, N2x, N3x, N4x, N5x, N6x, N7x, N8x, N9x, NAx, NBx, NCx, NDx, NEx, NFx, NGx, NHx, NKx, NLx, NMx, NNx, NPx, NQx, NRx, MBx	55Y3715	**
6	2-GB DDR3-1333 SDRAM SO-DIMM (PC3-10600) card • 4177–CTO, 22x, 23x, 24x, 25x, 26x, 27x, 28x, 29x, 2Ax, 2Bx, 2Cx, 2Dx, 2Ex, 2Fx, 2Gx, 2Hx, 2Jx, 2Kx, 2Lx, 2Mx, 2Nx, 2Px, Q2x, Q3x, Q4x, Q5x, Q7x, Q8x, QAx, QBx, QCx, QDx, QEx, QFx, QEx • 4178–CTO, 52x, 53x, 54x, 55x, 56x, 57x, 58x, 59x, 5Ax, 5Bx, 5Cx, 5Dx, 5Ex, 5Fx, 5Gx, 5Hx, 5Jx, 5Kx, 5Lx, 5Mx, 5Nx, 5Px, 5Qx, 5Rx, 5Sx, 5Tx, 5Ux, 5Vx, 5Wx, 5Xx, 5Yx, 5Zx, 92x, 93x, 94x, 95x, 96x, 97x, 98x, 99x, 9Ax, 9Bx, 9Cx, 9Dx, 9Ex, 9Fx, 9Gx, 9Hx, 9Jx, 9Kx, 9Lx, 9Mx, 9Nx, 9Px, 9Qx, 9Rx, 9Sx, 9Tx, 9Ux, 9Vx, 9Wx, 9Xx, 9Yx • 4179–CTO, G2x, G3x, G4x, G5x, G6x, G7x, G8x, G9x, GBx • 4180–CTO, 62x, 63x, 64x, 65x, K2x, K3x, K4x, K5x, K6x, K7x, K8x, K9x, KAx, KBx, KCx, KDx, KEx, KFx, KGx, KHx, KJx, KKx, KLx, KMx, KNx, KPx, KQx, KRx, KSx, KTx, KUx, KVx, KWx, KXx, KYx, KZx, L2x, L3x, L4x, L5x, L6x, L7x, L8x, L9x, LAx, LBx, LCx, LDx, LEx, LFx, LGx, LHx, LJx, LKx, LLx, LMx, LNx, LPx, LQx, LRx, LSx, LTx, LUx, LVx, LWx, LXx, LYx, LZx, M2x, M3x, M4x, M5x, M6x, M7x, M8x, M9x, MAx, MBx, MCx, MDx, MEx, MFx, MGx, MHx, MJx • 4236–CTO, 62x, 63x, 64x, 65x, N2x, N3x, N4x, N5x, N6x, N7x, N8x, N9x, NAx, NBx, NCx, NDx, NEx, NFx, NGx, NHx, NKx, NLx, NMx, NNx, NPx, NQx, NRx, MBx	55Y3716	**

Table 39. Parts list—Overall (continued)

No.	FRU (Overall)	FRU no.	CRU ID
6	4-GB DDR3-1333 SDRAM SO-DIMM (PC3-10600) card • 4177–CTO, 22x, 23x, 24x, 25x, 26x, 27x, 28x, 29x, 2Ax, 2Bx, 2Cx, 2Dx, 2Ex, 2Fx, 2Gx, 2Hx, 2Jx, 2Kx, 2Lx, 2Mx, 2Nx, 2Px, Q2x, Q3x, Q4x, Q5x, Q7x, Q8x, QAx, QBx, QCx, QFx, QEx • 4178–CTO, 52x, 53x, 54x, 55x, 56x, 57x, 58x, 59x, 5Ax, 5Bx, 5Cx, 5Dx, 5Ex, 5Fx, 5Gx, 5Hx, 5Jx, 5Kx, 5Lx, 5Mx, 5Nx, 5Px, 5Qx, 5Rx, 5Sx, 5Tx, 5Ux, 5Vx, 5Wx, 5Xx, 5Yx, 5Zx, 92x, 93x, 94x, 95x, 96x, 97x, 98x, 99x, 9Ax, 9Bx, 9Cx, 9Dx, 9Ex, 9Fx, 9Gx, 9Hx, 9Jx, 9Kx, 9Lx, 9Mx, 9Nx, 9Px, 9Qx, 9Rx, 9Sx, 9Tx, 9Ux, 9Vx, 9Wx, 9Xx, 9Yx • 4179–CTO, G2x, G3x, G4x, G5x, G6x, G7x, G8x, G9x, GBx • 4180–CTO, 62x, 63x, 64x, 65x, K2x, K3x, K4x, K5x, K6x, K7x, K8x, K9x, KAx, KBx, KCx, KDx, KEx, KFx, KGx, KHx, KJx, KKx, KLx, KMx, KNx, KPx, KQx, KRx, KSx, KTx, KUx, KVx, KWx, KXx, KYx, KZx, L2x, L3x, L4x, L5x, L6x, L7x, L8x, L9x, LAx, LBx, LCx, LDx, LEx, LFx, LGx, LHx, LJx, LKx, LLx, LMx, LNx, LPx, LQx, LRx, LSx, LTx, LUx, LVx, LWx, LXx, LYx, LZx, M2x, M3x, M4x, M5x, M6x, M7x, M8x, M9x, MAx, MBx, MCx, MDx, MEx, MFx, MGx, MHx, MJx • 4236–CTO, 62x, 63x, 64x, 65x, N2x, N3x, N4x, N5x, N6x, N7x, N8x, N9x, NAx, NBx, NCx, NDx, NEx, NFx, NGx, NHx, NKx, NLx, NMx, NNx, NPx, NQx, NRx, MBx	55Y3717	**
7	I/O sub card (USB only) • 4177–CTO, 22x, 23x, 24x, 25x, 26x, 27x, 28x, 29x, 2Ax, 2Bx, 2Cx, 2Dx, 2Ex, 2Jx, Q2x, Q3x, Q4x, Q5x, Q7x, QAx, QCx, QDx, QFx • 4178–CTO, 52x, 53x, 54x, 55x, 56x, 57x, 58x, 59x, 5Ax, 5Bx, 5Cx, 5Dx, 5Ex, 5Fx, 5Gx, 5Hx, 5Jx, 5Kx, 5Lx, 5Mx, 5Nx, 5Px, 5Qx, 5Rx, 5Sx, 5Tx, 5Ux, 5Vx, 5Wx, 5Xx, 5Yx, 5Zx, 92x, 93x, 94x, 95x, 96x, 97x, 98x, 99x, 9Ax, 9Bx, 9Cx, 9Dx, 9Ex, 9Px, 9Qx, 9Rx • 4179–CTO, G2x, G3x, G4x, G5x, G6x, G7x, G8x, G9x • 4180–CTO, K2x, K3x, K4x, K5x, K6x, K7x, K8x, K9x, KAx, KBx, KCx, KDx, KEx, KFx, KGx, KHx, KJx, KKx, KLx, KMx, KNx, KPx, KQx, KRx, KSx, KTx, KUx, KVx, KWx, KXx, KYx, KZx, L2x, L3x, L4x, L5x, L6x, L7x, L8x, L9x, LAx, LBx, LCx, LDx, LEx, LFx, LGx, LHx, LJx, LKx, LLx, LMx, LNx, LPx, LQx, LRx, LSx, LTx, LUx, LVx, LWx, LXx, LYx, LZx, M2x, M3x, M4x, M5x, M6x, M7x, M8x, M9x, MAx, MBx, MCx, MDx, MEx, MFx, MGx • 4236–CTO, N2x, N3x, N4x, N5x, N6x, N7x, N8x, N9x, NAx, NBx, NCx, NDx, NEx, NFx, NGx, NHx, NKx, NLx, NMx, NNx, NPx, NQx, NRx, MBx	04W1630	N
7	I/O sub card (1394/USB) • 4177–CTO, 2Fx, 2Gx, 2Hx, 2Kx, 2Lx, 2Mx, 2Nx, 2Px, Q8x, QBx, QEx • 4178–CTO, 9Fx, 9Gx, 9Hx, 9Jx, 9Kx, 9Lx, 9Mx, 9Nx, 9Sx, 9Tx, 9Ux, 9Vx, 9Wx, 9Xx, 9Yx • 4179–CTO, GBx • 4180–CTO, 62x, 63x, 64x, 65x, MHx, MJx • 4236–CTO, 62x, 63x, 64x, 65x	04W1631	N
8	Battery pack, Li-ion (4-cell) 55 • 4177–CTO, 2Dx, QDx, QEx • 4178–CTO, 9Fx, 9Gx, 9Hx, 9Jx, 9Kx, 9Lx, 9Mx, 9Nx • 4179–CTO • 4180–CTO • 4236–CTO	42T4883	*
8	Battery pack, Li-ion (4-cell) 55 • 4177–CTO, 2Dx, QDx, QEx • 4178–CTO, 9Fx, 9Gx, 9Hx, 9Jx, 9Kx, 9Lx, 9Mx, 9Nx • 4179–CTO • 4180–CTO • 4236–CTO	42T4885	*

Table 39. Parts list—Overall (continued)

No.	FRU (Overall)	FRU no.	CRU ID
8	Battery pack, Li-ion (6-cell) 55+ • 4177–CTO, 22x, 23x, 24x, 25x, 26x, 27x, 28x, 29x, 2Ax, 2Bx, 2Cx, 2Ex, 2Fx, 2Gx, 2Hx, 2Jx, 2Kx, 2Lx, 2Mx, 2Nx, 2Px, Q2x, Q5x, Q8x, QAx, QCx • 4178–CTO, 52x, 53x, 54x, 55x, 56x, 57x, 59x, 5Ax, 5Bx, 5Cx, 5Dx, 5Ex, 5Fx, 5Gx, 5Hx, 5Jx, 5Kx, 5Lx, 5Mx, 5Nx, 5Px, 5Qx, 5Rx, 5Sx, 5Tx, 5Ux, 5Vx, 5Wx, 5Xx, 5Yx, 5Zx, 92x, 93x, 94x, 95x, 96x, 97x, 98x, 99x, 9Ax, 9Bx, 9Cx, 9Dx, 9Ex, 9Px, 9Qx, 9Rx, 9Sx, 9Tx, 9Ux, 9Vx, 9Wx, 9Xx, 9Yx • 4179–CTO, G2x, G3x, G4x, G5x, G6x, G7x, G8x, G9x, GBx • 4180–CTO, 62x, 63x, 64x, K2x, K3x, K4x, K5x, K6x, K7x, K8x, K9x, KAx, KBx, KCx, KDx, KEx, KFx, KGx, KHx, KJx, KKx, KLx, KMx, KNx, KPx, KQx, KRx, KSx, KTx, KUx, KVx, KWx, KXx, KYx, L2x, L3x, L4x, L5x, L6x, L7x, L8x, L9x, LAx, LBx, LCx, LDx, LEx, LFx, LGx, LHx, LJx, LKx, LLx, LMx, LNx, LPx, LQx, LRx, LSx, LTx, LUx, LVx, LWx, LXx, LYx, LZx, M2x, M3x, M4x, M5x, M6x, M7x, M8x, M9x, MBx, MCx, MDx, MEx, MGx, MHx, MJx • 4236–CTO, 62x, 63x, 64x, N2x, N3x, N4x, N5x, N6x, N7x, N8x, N9x, NAx, NBx, NCx, NDx, NEx, NFx, NGx, NHx, NKx, NLx, NMx, NNx, NPx, NQx, NRx, MBx	42T4791	*
8	Battery pack, Li-ion (6-cell) 55+ • 4177–CTO, 22x, 23x, 24x, 25x, 26x, 27x, 28x, 29x, 2Ax, 2Bx, 2Cx, 2Ex, 2Fx, 2Gx, 2Hx, 2Jx, 2Kx, 2Lx, 2Mx, 2Nx, 2Px, Q2x, Q5x, Q8x, QAx, QCx • 4178–CTO, 52x, 53x, 54x, 55x, 56x, 57x, 59x, 5Ax, 5Bx, 5Cx, 5Dx, 5Ex, 5Fx, 5Gx, 5Hx, 5Jx, 5Kx, 5Lx, 5Mx, 5Nx, 5Px, 5Qx, 5Rx, 5Sx, 5Tx, 5Ux, 5Vx, 5Wx, 5Xx, 5Yx, 5Zx, 92x, 93x, 94x, 95x, 96x, 97x, 98x, 99x, 9Ax, 9Bx, 9Cx, 9Dx, 9Ex, 9Px, 9Qx, 9Rx, 9Sx, 9Tx, 9Ux, 9Vx, 9Wx, 9Xx, 9Yx • 4179–CTO, G2x, G3x, G4x, G5x, G6x, G7x, G8x, G9x, GBx • 4180–CTO, 62x, 63x, 64x, K2x, K3x, K4x, K5x, K6x, K7x, K8x, K9x, KAx, KBx, KCx, KDx, KEx, KFx, KGx, KHx, KJx, KKx, KLx, KMx, KNx, KPx, KQx, KRx, KSx, KTx, KUx, KVx, KWx, KXx, KYx, L2x, L3x, L4x, L5x, L6x, L7x, L8x, L9x, LAx, LBx, LCx, LDx, LEx, LFx, LGx, LHx, LJx, LKx, LLx, LMx, LNx, LPx, LQx, LRx, LSx, LTx, LUx, LVx, LWx, LXx, LYx, LZx, M2x, M3x, M4x, M5x, M6x, M7x, M8x, M9x, MBx, MCx, MDx, MEx, MGx, MHx, MJx • 4236–CTO, 62x, 63x, 64x, N2x, N3x, N4x, N5x, N6x, N7x, N8x, N9x, NAx, NBx, NCx, NDx, NEx, NFx, NGx, NHx, NKx, NLx, NMx, NNx, NPx, NQx, NRx, MBx	42T4793	*
8	Battery pack, Li-ion (6-cell) 55+ • 4177–CTO, 22x, 23x, 24x, 25x, 26x, 27x, 28x, 29x, 2Ax, 2Bx, 2Cx, 2Ex, 2Fx, 2Gx, 2Hx, 2Jx, 2Kx, 2Lx, 2Mx, 2Nx, 2Px, Q2x, Q5x, Q8x, QAx, QCx • 4178–CTO, 52x, 53x, 54x, 55x, 56x, 57x, 59x, 5Ax, 5Bx, 5Cx, 5Dx, 5Ex, 5Fx, 5Gx, 5Hx, 5Jx, 5Kx, 5Lx, 5Mx, 5Nx, 5Px, 5Qx, 5Rx, 5Sx, 5Tx, 5Ux, 5Vx, 5Wx, 5Xx, 5Yx, 5Zx, 92x, 93x, 94x, 95x, 96x, 97x, 98x, 99x, 9Ax, 9Bx, 9Cx, 9Dx, 9Ex, 9Px, 9Qx, 9Rx, 9Sx, 9Tx, 9Ux, 9Vx, 9Wx, 9Xx, 9Yx • 4179–CTO, G2x, G3x, G4x, G5x, G6x, G7x, G8x, G9x, GBx • 4180–CTO, 62x, 63x, 64x, K2x, K3x, K4x, K5x, K6x, K7x, K8x, K9x, KAx, KBx, KCx, KDx, KEx, KFx, KGx, KHx, KJx, KKx, KLx, KMx, KNx, KPx, KQx, KRx, KSx, KTx, KUx, KVx, KWx, KXx, KYx, L2x, L3x, L4x, L5x, L6x, L7x, L8x, L9x, LAx, LBx, LCx, LDx, LEx, LFx, LGx, LHx, LJx, LKx, LLx, LMx, LNx, LPx, LQx, LRx, LSx, LTx, LUx, LVx, LWx, LXx, LYx, LZx, M2x, M3x, M4x, M5x, M6x, M7x, M8x, M9x, MBx, MCx, MDx, MEx, MGx, MHx, MJx • 4236–CTO, 62x, 63x, 64x, N2x, N3x, N4x, N5x, N6x, N7x, N8x, N9x, NAx, NBx, NCx, NDx, NEx, NFx, NGx, NHx, NKx, NLx, NMx, NNx, NPx, NQx, NRx, MBx	42T4795	*

Table 39. Parts list—Overall (continued)

No.	FRU (Overall)	FRU no.	CRU ID
8	Battery pack, Li-ion (6-cell) 55+ • 4177–CTO, 22x, 23x, 24x, 25x, 26x, 27x, 28x, 29x, 2Ax, 2Bx, 2Cx, 2Ex, 2Fx, 2Gx, 2Hx, 2Jx, 2Kx, 2Lx, 2Mx, 2Nx, 2Px, Q2x, Q5x, Q8x, QAx, QCx • 4178–CTO, 52x, 53x, 54x, 55x, 56x, 57x, 59x, 5Ax, 5Bx, 5Cx, 5Dx, 5Ex, 5Fx, 5Gx, 5Hx, 5Jx, 5Kx, 5Lx, 5Mx, 5Nx, 5Px, 5Qx, 5Rx, 5Sx, 5Tx, 5Ux, 5Vx, 5Wx, 5Xx, 5Yx, 5Zx, 92x, 93x, 94x, 95x, 96x, 97x, 98x, 99x, 9Ax, 9Bx, 9Cx, 9Dx, 9Ex, 9Px, 9Qx, 9Rx, 9Sx, 9Tx, 9Ux, 9Vx, 9Wx, 9Xx, 9Yx • 4179–CTO, G2x, G3x, G4x, G5x, G6x, G7x, G8x, G9x, GBx • 4180–CTO, 62x, 63x, 64x, K2x, K3x, K4x, K5x, K6x, K7x, K8x, K9x, KAx, KBx, KCx, KDx, KEx, KFx, KGx, KHx, KJx, KKx, KLx, KMx, KNx, KPx, KQx, KRx, KSx, KTx, KUx, KVx, KWx, KXx, KYx, L2x, L3x, L4x, L5x, L6x, L7x, L8x, L9x, LAx, LBx, LCx, LDx, LEx, LFx, LGx, LHx, LJx, LKx, LLx, LMx, LNx, LPx, LQx, LRx, LSx, LTx, LUx, LVx, LWx, LXx, LYx, LZx, M2x, M3x, M4x, M5x, M6x, M7x, M8x, M9x, MBx, MCx, MDx, MEx, MGx, MHx, MJx • 4236–CTO, 62x, 63x, 64x, N2x, N3x, N4x, N5x, N6x, N7x, N8x, N9x, NAx, NBx, NCx, NDx, NEx, NFx, NGx, NHx, NKx, NLx, NMx, NNx, NPx, NQx, NRx, MBx	42T4911	*
8	Battery pack, Li-ion (6-cell) 26+ • 4177–CTO • 4178–CTO • 4179–CTO • 4180–CTO • 4236–CTO	42T4817	*
8	Battery pack, Li-ion (6-cell) 26+ • 4177–CTO • 4178–CTO • 4179–CTO • 4180–CTO • 4236–CTO	42T4819	*
8	Battery pack, Li-ion (9-cell) 55++ • 4177–CTO, Q3x, Q4x, Q7x, QBx, QFx • 4178–CTO, 58x • 4179–CTO • 4180–CTO, 65x, KZx, MAx, MFx • 4236–CTO, 65x	42T4799	*
8	Battery pack, Li-ion (9-cell) 55++ • 4177–CTO, Q3x, Q4x, Q7x, QBx, QFx • 4178–CTO, 58x • 4179–CTO • 4180–CTO, 65x, KZx, MAx, MFx • 4236–CTO, 65x	42T4801	*
8	Battery pack, Li-ion (9-cell) 55++ • 4177–CTO, Q3x, Q4x, Q7x, QBx, QFx • 4178–CTO, 58x • 4179–CTO • 4180–CTO, 65x, KZx, MAx, MFx • 4236–CTO, 65x	42T4912	*

Table 39. Parts list—Overall (continued)

No.	FRU (Overall)	FRU no.	CRU ID
9	Base cover assembly • 4177–CTO, 22x, 23x, 24x, 25x, 26x, 27x, 28x, 29x, 2Ax, 2Bx, 2Cx, 2Dx, 2Ex, 2Fx, 2Gx, 2Hx, 2Jx, 2Kx, 2Lx, 2Mx, 2Nx, 2Px, Q2x, Q3x, Q4x, Q5x, Q7x, Q8x, QAx, QBx, QCx, QDx • 4178–CTO, 52x, 53x, 54x, 55x, 56x, 57x, 58x, 59x, 5Ax, 5Bx, 5Cx, 5Dx, 5Ex, 5Fx, 5Gx, 5Hx, 5Jx, 5Kx, 5Lx, 5Mx, 5Nx, 5Px, 5Qx, 5Rx, 5Sx, 5Tx, 5Ux, 5Vx, 5Wx, 5Xx, 5Yx, 5Zx, 92x, 93x, 94x, 95x, 96x, 97x, 98x, 99x, 9Ax, 9Bx, 9Cx, 9Dx, 9Ex, 9Px, 9Qx, 9Rx, 9Sx, 9Tx, 9Ux, 9Vx, 9Wx, 9Xx, 9Yx • 4179–CTO, G2x, G3x, G4x, G5x, G6x, G7x, G8x, G9x, GBx • 4180–CTO, 62x, 63x, 64x, 65x, K2x, K3x, K4x, K5x, K6x, K7x, K8x, K9x, KAx, KBx, KCx, KDx, KEx, KFx, KGx, KHx, KJx, KKx, KLx, KMx, KNx, KPx, KQx, KRx, KSx, KTx, KUx, KVx, KWx, KXx, KYx, KZx, L2x, L3x, L4x, L5x, L6x, L7x, L8x, L9x, LAx, LBx, LCx, LDx, LEx, LFx, LGx, LHx, LJx, LKx, LLx, LMx, LNx, LPx, LQx, LRx, LSx, LTx, LUx, LVx, LWx, LXx, LYx, LZx, M2x, M3x, M4x, M5x, M6x, M7x, M8x, M9x, MAx, MBx, MCx, MDx, MEx, MFx, MGx, MHx, MJx • 4236–CTO, 62x, 63x, 64x, 65x, N2x, N3x, N4x, N5x, N6x, N7x, N8x, N9x, NAx, NBx, NCx, NDx, NEx, NFx, NGx, NHx, NKx, NLx, NMx, NNx, NPx, NQx, NRx, MBx	04W1626	N
9	Base cover assembly • 4177–CTO • 4178–CTO, 5Fx, 5Hx, 9Hx, 9Jx, 9Kx, 9Lx, 9Mx, 9Nx • 4179–CTO • 4180–CTO, 64x, 65x • 4236–CTO, 64x, 65x	04W1627	N
9	Base cover assembly • 4177–CTO • 4178–CTO, 5Bx, 5Dx, 5Kx, 9Fx, 9Gx • 4179–CTO • 4180–CTO, 62x, 63x, MBx • 4236–CTO, 62x, 63x, NHx, MBx	04W1628	N
10	Integrated Mobile Broadband (Gobi 3000 3G with GPS) • 4177–CTO • 4178–CTO • 4179–CTO • 4180–CTO • 4236–CTO	60Y3257	**
10	Integrated Mobile Broadband (Ericsson F5521gw) • 4177–CTO, Q7x, QFx • 4178–CTO, 54x, 55x, 5Ax, 5Cx, 5Ex, 5Gx, 5Jx, 5Tx, 94x, 99x • 4179–CTO • 4180–CTO, K9x, KAx, KBx, KCx, KFx, KJx, KMx, KNx, KSx, KUx, KVx, KYx, KZx, L2x, L4x, L8x, LBx, LHx, LJx, LKx, M5x, MDx, MFx • 4236–CTO, N2x, N4x, NAx, NBx, NFx, NGx, NMx, NNx	60Y3277	**
	Integrated Mobile Broadband (Ericsson F5521gw for Malaysia) • 4177–CTO • 4178–CTO • 4179–CTO • 4180–CTO • 4236–CTO	60Y3267	**

Table 39. Parts list—Overall (continued)

No.	FRU (Overall)	FRU no.	CRU ID
10	Integrated China Telecom Mobile Broadband (Huawei EM660) • 4177–CTO • 4178–CTO • 4179–CTO • 4180–CTO • 4236–CTO	60Y3239	**
11	HDD rubber rails	41V9756	**
11	HDD rubber rails	04W1640	**
12	SATA hard disk drive, 250 GB, 5,400 rpm • 4177–CTO, 26x, QAx, QCx • 4178–CTO • 4179–CTO • 4180–CTO, K3x, K4x, KQx, MFx • 4236–CTO, N5x	45N7217	**
12	SATA hard disk drive, 250 GB, 5,400 rpm • 4177–CTO, 26x, QAx, QCx • 4178–CTO • 4179–CTO • 4180–CTO, K3x, K4x, KQx, MFx • 4236–CTO, N5x	45N7229	**
12	SATA hard disk drive, 250 GB, 5,400 rpm • 4177–CTO, 26x, QAx, QCx • 4178–CTO • 4179–CTO • 4180–CTO, K3x, K4x, KQx, MFx • 4236–CTO, N5x	45N7305	**
12	SATA hard disk drive, 250 GB, 5,400 rpm • 4177–CTO, 26x, QAx, QCx • 4178–CTO • 4179–CTO • 4180–CTO, K3x, K4x, KQx, MFx • 4236–CTO, N5x	45N7285	**
12	SATA hard disk drive, 250 GB, 5,400 rpm • 4177–CTO, 26x, QAx, QCx • 4178–CTO • 4179–CTO • 4180–CTO, K3x, K4x, KQx, MFx • 4236–CTO, N5x	42T1153	**
12	SATA hard disk drive, 250 GB, 5,400 rpm • 4177–CTO, 26x, QAx, QCx • 4178–CTO • 4179–CTO • 4180–CTO, K3x, K4x, KQx, MFx • 4236–CTO, N5x	42T1167	**
12	SATA hard disk drive, 320 GB, 5,400 rpm • 4177–CTO, 22x, 25x, 28x, 2Dx, 2Ex, QDx • 4178–CTO, 5Ax, 5Bx, 5Cx, 5Dx, 9Vx • 4179–CTO, G2x, G4x, G5x, G6x, G7x, G8x, G9x • 4180–CTO, KWx, LEx, LNx, LUx, M7x, MAx • 4236–CTO, N2x, N6x, NCx	45N7219	**

Table 39. Parts list—Overall (continued)

No.	FRU (Overall)	FRU no.	CRU ID
12	SATA hard disk drive, 320 GB, 5,400 rpm • 4177–CTO, 22x, 25x, 28x, 2Dx, 2Ex, QDx • 4178–CTO, 5Ax, 5Bx, 5Cx, 5Dx, 9Vx • 4179–CTO, G2x, G4x, G5x, G6x, G7x, G8x, G9x • 4180–CTO, KWx, LEx, LNx, LUx, M7x, MAx • 4236–CTO, N2x, N6x, NCx	45N7297	**
12	SATA hard disk drive, 320 GB, 5,400 rpm • 4177–CTO, 22x, 25x, 28x, 2Dx, 2Ex, QDx • 4178–CTO, 5Ax, 5Bx, 5Cx, 5Dx, 9Vx • 4179–CTO, G2x, G4x, G5x, G6x, G7x, G8x, G9x • 4180–CTO, KWx, LEx, LNx, LUx, M7x, MAx • 4236–CTO, N2x, N6x, NCx	45N7315	**
12	SATA hard disk drive, 320 GB, 5,400 rpm • 4177–CTO, 22x, 25x, 28x, 2Dx, 2Ex, QDx • 4178–CTO, 5Ax, 5Bx, 5Cx, 5Dx, 9Vx • 4179–CTO, G2x, G4x, G5x, G6x, G7x, G8x, G9x • 4180–CTO, KWx, LEx, LNx, LUx, M7x, MAx • 4236–CTO, N2x, N6x, NCx	45N7307	**
12	SATA hard disk drive, 320 GB, 5,400 rpm • 4177–CTO, 22x, 25x, 28x, 2Dx, 2Ex, QDx • 4178–CTO, 5Ax, 5Bx, 5Cx, 5Dx, 9Vx • 4179–CTO, G2x, G4x, G5x, G6x, G7x, G8x, G9x • 4180–CTO, KWx, LEx, LNx, LUx, M7x, MAx • 4236–CTO, N2x, N6x, NCx	45N7287	**
12	SATA hard disk drive, 320 GB, 5,400 rpm • 4177–CTO, 22x, 25x, 28x, 2Dx, 2Ex, QDx • 4178–CTO, 5Ax, 5Bx, 5Cx, 5Dx, 9Vx • 4179–CTO, G2x, G4x, G5x, G6x, G7x, G8x, G9x • 4180–CTO, KWx, LEx, LNx, LUx, M7x, MAx • 4236–CTO, N2x, N6x, NCx	42T1155	**
12	SATA hard disk drive, 160 GB, 7200 rpm • 4177–CTO • 4178–CTO • 4179–CTO • 4180–CTO • 4236–CTO	45N7251	**
12	SATA hard disk drive, 160 GB, 7200 rpm • 4177–CTO • 4178–CTO • 4179–CTO • 4180–CTO • 4236–CTO	45N7271	**
12	SATA hard disk drive, 160 GB, 7200 rpm • 4177–CTO • 4178–CTO • 4179–CTO • 4180–CTO • 4236–CTO	45N7317	**

Table 39. Parts list—Overall (continued)

No.	FRU (Overall)	FRU no.	CRU ID
12	SATA hard disk drive, 160 GB, 7200 rpm • 4177–CTO • 4178–CTO • 4179–CTO • 4180–CTO • 4236–CTO	42T1157	**
12	SATA hard disk drive, 160 GB, 7200 rpm • 4177–CTO • 4178–CTO • 4179–CTO • 4180–CTO • 4236–CTO	42T1169	**
12	SATA hard disk drive, 250 GB, 7200 rpm • 4177–CTO • 4178–CTO • 4179–CTO • 4180–CTO • 4236–CTO	42T1163	**
12	SATA hard disk drive, 320 GB, 7200 rpm • 4177–CTO, 23x, 29x, 2Ax, 2Fx, Q2x, Q4x, Q5x • 4178–CTO, 52x, 53x, 54x, 56x, 58x, 59x, 5Ex, 5Fx, 5Gx, 5Hx, 5Jx, 5Kx, 9Ex, 9Px, 9Qx, 9Rx, 9Ux, 9Wx, 9Xx, 9Yx • 4179–CTO • 4180–CTO, 62x, 63x, 64x, K2x, K6x, K7x, K8x, K9x, KCx, KEx, KFx, KHx, KJx, KLx, KMx, KPx, KRx, KSx, KTx, KUx, KYx, L2x, L9x, LAx, LCx, LDx, LVx, LWx, M9x, MBx, MCx, MGx, MJx • 4236–CTO, 62x, 63x, 64x, N3x, N4x, NHx, NKx, NLx, NNx, MBx	45N7255	**
12	SATA hard disk drive, 320 GB, 7200 rpm • 4177–CTO, 23x, 29x, 2Ax, 2Fx, Q2x, Q4x, Q5x • 4178–CTO, 52x, 53x, 54x, 56x, 58x, 59x, 5Ex, 5Fx, 5Gx, 5Hx, 5Jx, 5Kx, 9Ex, 9Px, 9Qx, 9Rx, 9Ux, 9Wx, 9Xx, 9Yx • 4179–CTO • 4180–CTO, 62x, 63x, 64x, K2x, K6x, K7x, K8x, K9x, KCx, KEx, KFx, KHx, KJx, KLx, KMx, KPx, KRx, KSx, KTx, KUx, KYx, L2x, L9x, LAx, LCx, LDx, LVx, LWx, M9x, MBx, MCx, MGx, MJx • 4236–CTO, 62x, 63x, 64x, N3x, N4x, NHx, NKx, NLx, NNx, MBx	45N7275	**
12	SATA hard disk drive, 320 GB, 7200 rpm • 4177–CTO, 23x, 29x, 2Ax, 2Fx, Q2x, Q4x, Q5x • 4178–CTO, 52x, 53x, 54x, 56x, 58x, 59x, 5Ex, 5Fx, 5Gx, 5Hx, 5Jx, 5Kx, 9Ex, 9Px, 9Qx, 9Rx, 9Ux, 9Wx, 9Xx, 9Yx • 4179–CTO • 4180–CTO, 62x, 63x, 64x, K2x, K6x, K7x, K8x, K9x, KCx, KEx, KFx, KHx, KJx, KLx, KMx, KPx, KRx, KSx, KTx, KUx, KYx, L2x, L9x, LAx, LCx, LDx, LVx, LWx, M9x, MBx, MCx, MGx, MJx • 4236–CTO, 62x, 63x, 64x, N3x, N4x, NHx, NKx, NLx, NNx, MBx	45N7319	**
12	SATA hard disk drive, 320 GB, 7200 rpm • 4177–CTO, 23x, 29x, 2Ax, 2Fx, Q2x, Q4x, Q5x • 4178–CTO, 52x, 53x, 54x, 56x, 58x, 59x, 5Ex, 5Fx, 5Gx, 5Hx, 5Jx, 5Kx, 9Ex, 9Px, 9Qx, 9Rx, 9Ux, 9Wx, 9Xx, 9Yx • 4179–CTO • 4180–CTO, 62x, 63x, 64x, K2x, K6x, K7x, K8x, K9x, KCx, KEx, KFx, KHx, KJx, KLx, KMx, KPx, KRx, KSx, KTx, KUx, KYx, L2x, L9x, LAx, LCx, LDx, LVx, LWx, M9x, MBx, MCx, MGx, MJx • 4236–CTO, 62x, 63x, 64x, N3x, N4x, NHx, NKx, NLx, NNx, MBx	42T1159	**

Table 39. Parts list—Overall (continued)

No.	FRU (Overall)	FRU no.	CRU ID
12	SATA hard disk drive, 320 GB, 7200 rpm • 4177–CTO, 23x, 29x, 2Ax, 2Fx, Q2x, Q4x, Q5x • 4178–CTO, 52x, 53x, 54x, 56x, 58x, 59x, 5Ex, 5Fx, 5Gx, 5Hx, 5Jx, 5Kx, 9Ex, 9Px, 9Qx, 9Rx, 9Ux, 9Wx, 9Xx, 9Yx • 4179–CTO • 4180–CTO, 62x, 63x, 64x, K2x, K6x, K7x, K8x, K9x, KCx, KEx, KFx, KHx, KJx, KLx, KMx, KPx, KRx, KSx, KTx, KUx, KYx, L2x, L9x, LAx, LCx, LDx, LVx, LWx, M9x, MBx, MCx, MGx, MJx • 4236–CTO, 62x, 63x, 64x, N3x, N4x, NHx, NKx, NLx, NNx, MBx	42T1171	**
12	SATA hard disk drive, 500 GB, 7200 rpm • 4177–CTO, 24x, 27x, 2Bx, 2Cx, 2Gx, 2Hx, 2Jx, 2Kx, 2Lx, 2Mx, 2Nx, 2Px, Q3x, QBx • 4178–CTO, 55x, 57x, 5Lx, 5Mx, 5Nx, 5Px, 5Qx, 5Tx, 5Ux, 5Vx, 5Wx, 5Xx, 5Yx, 5Zx, 92x, 93x, 94x, 95x, 96x, 97x, 98x, 9Ax, 9Bx, 9Cx, 9Dx, 9Fx, 9Gx, 9Hx, 9Jx, 9Kx, 9Lx, 9Mx, 9Nx, 9Sx, 9Tx • 4179–CTO, G3x, GBx • 4180–CTO, 65x, K5x, KDx, KGx, KKx, KNx, KVx, KXx, KZx, LBx, LFx, LGx, LHx, LJx, LKx, LLx, LMx, LPx, LQx, LRx, LSx, LTx, LXx, LYx, LZx, M2x, M3x, M4x, M5x, M6x, M8x, MHx • 4236–CTO, 65x, N7x, N8x, N9x, NAx, NBx, NDx, NEx, NFx, NGx, NPx, NQx, NRx	45N7257	**
12	SATA hard disk drive, 500 GB, 7200 rpm • 4177–CTO, 24x, 27x, 2Bx, 2Cx, 2Gx, 2Hx, 2Jx, 2Kx, 2Lx, 2Mx, 2Nx, 2Px, Q3x, QBx • 4178–CTO, 55x, 57x, 5Lx, 5Mx, 5Nx, 5Px, 5Qx, 5Tx, 5Ux, 5Vx, 5Wx, 5Xx, 5Yx, 5Zx, 92x, 93x, 94x, 95x, 96x, 97x, 98x, 9Ax, 9Bx, 9Cx, 9Dx, 9Fx, 9Gx, 9Hx, 9Jx, 9Kx, 9Lx, 9Mx, 9Nx, 9Sx, 9Tx • 4179–CTO, G3x, GBx • 4180–CTO, 65x, K5x, KDx, KGx, KKx, KNx, KVx, KXx, KZx, LBx, LFx, LGx, LHx, LJx, LKx, LLx, LMx, LPx, LQx, LRx, LSx, LTx, LXx, LYx, LZx, M2x, M3x, M4x, M5x, M6x, M8x, MHx • 4236–CTO, 65x, N7x, N8x, N9x, NAx, NBx, NDx, NEx, NFx, NGx, NPx, NQx, NRx	45N7277	**
12	SATA hard disk drive, 500 GB, 7200 rpm • 4177–CTO, 24x, 27x, 2Bx, 2Cx, 2Gx, 2Hx, 2Jx, 2Kx, 2Lx, 2Mx, 2Nx, 2Px, Q3x, QBx • 4178–CTO, 55x, 57x, 5Lx, 5Mx, 5Nx, 5Px, 5Qx, 5Tx, 5Ux, 5Vx, 5Wx, 5Xx, 5Yx, 5Zx, 92x, 93x, 94x, 95x, 96x, 97x, 98x, 9Ax, 9Bx, 9Cx, 9Dx, 9Fx, 9Gx, 9Hx, 9Jx, 9Kx, 9Lx, 9Mx, 9Nx, 9Sx, 9Tx • 4179–CTO, G3x, GBx • 4180–CTO, 65x, K5x, KDx, KGx, KKx, KNx, KVx, KXx, KZx, LBx, LFx, LGx, LHx, LJx, LKx, LLx, LMx, LPx, LQx, LRx, LSx, LTx, LXx, LYx, LZx, M2x, M3x, M4x, M5x, M6x, M8x, MHx • 4236–CTO, 65x, N7x, N8x, N9x, NAx, NBx, NDx, NEx, NFx, NGx, NPx, NQx, NRx	45N7321	**
—	SSD spacers • 4177–CTO, Q7x, Q8x • 4178–CTO, 5Rx, 5Sx, 99x • 4179–CTO • 4180–CTO, KAx, KBx, L3x, L4x, L5x, L6x, L7x, L8x, MDx, MEx • 4236–CTO, NMx	04W1641	**
12	Solid state drive, 128 GB • 4177–CTO, Q7x, QFx • 4178–CTO, 5Rx • 4179–CTO • 4180–CTO, KAx, L3x, L6x, L7x • 4236–CTO, NMx	45N7995	**

Table 39. Parts list—Overall (continued)

No.	FRU (Overall)	FRU no.	CRU ID
12	Solid state drive, 128 GB • 4177–CTO, Q7x, QFx • 4178–CTO, 5Rx • 4179–CTO • 4180–CTO, KAx, L3x, L6x, L7x • 4236–CTO, NMx	45N8007	**
12	Solid state drive, 128 GB • 4177–CTO, Q7x, QFx • 4178–CTO, 5Rx • 4179–CTO • 4180–CTO, KAx, L3x, L6x, L7x • 4236–CTO, NMx	45N7981	**
12	Solid state drive, 160 GB • 4177–CTO, Q8x, QEx • 4178–CTO, 5Sx, 99x • 4179–CTO • 4180–CTO, KBx, L4x, L5x, L8x, MDx, MEx • 4236–CTO	45N8027	**
13	Modem daughter card (MDC)	60Y3207	N
14	System board assembly, integrated graphics, AMT, TPM, AES • 4177–CTO, Q2x, Q5x, Q8x, QAx • 4178–CTO, 52x, 56x, 57x, 59x, 5Ax, 5Bx, 5Vx, 5Wx, 5Xx, 9Bx, 9Cx, 9Px, 9Qx • 4179–CTO, G8x • 4180–CTO, 62x, 63x, K2x, K3x, K4x, K5x, K6x, K7x, K8x, K9x, KAx, KBx, KCx, KDx, KEx, KFx, KGx, KHx, KJx, KKx, LDx, LUx, LWx, M2x, M7x, M8x, M9x, MBx, MDx, MEx, MJx • 4236–CTO, 62x, 63x, N2x, N3x, N5x, NGx, NHx, NMx, NNx, MBx	04W1345	N
14	System board assembly, integrated graphics, AMT, non-TPM, non-AES • 4177–CTO, 2Hx • 4178–CTO • 4179–CTO • 4180–CTO, MCx • 4236–CTO	04W1346	N
14	System board assembly, integrated graphics, non-AMT, TPM, AES • 4177–CTO, 25x, 26x, 27x, 28x, 29x, 2Dx, 2Ex, Q7x, QCx, QDx • 4178–CTO, 53x, 5Cx, 5Dx, 5Jx, 5Kx, 5Lx, 5Mx, 5Nx, 5Px, 5Rx, 5Tx, 5Ux, 92x, 93x, 95x, 96x, 97x, 98x, 9Fx, 9Gx, 9Rx • 4179–CTO, G2x, G3x, G4x, G5x, G6x, G7x, G8x, GBx • 4180–CTO, LEx, LFx, LGx, LHx, LJx, LKx, LNx, LPx, LRx, LSx, LTx • 4236–CTO, N6x, N7x, N8x, NCx, NKx, NLx	04W1466	N
14	System board assembly, integrated graphics, non-AMT, non-TPM, non-AES • 4177–CTO, 2Fx, 2Gx • 4178–CTO, 9Vx, 9Wx, 9Yx • 4179–CTO • 4180–CTO • 4236–CTO	04W1468	N

Table 39. Parts list—Overall (continued)

No.	FRU (Overall)	FRU no.	CRU ID
14	System board assembly, discrete graphics, AMT, TPM, AES • 4177–CTO, 2Jx, 2Nx, 2Px, Q3x, Q4x, QBx, QFx • 4178–CTO, 54x, 55x, 58x, 5Ex, 5Fx, 5Yx, 5Zx, 99x, 9Ax • 4179–CTO • 4180–CTO, 64x, 65x, KLx, KMx, KNx, KPx, KQx, KRx, KSx, KTx, KUx, KVx, KWx, KXx, KYx, KZx, L2x, L3x, L4x, L5x, L6x, L7x, L8x, L9x, LAx, LBx, LCx, LLx, LMx, LQx, LVx, LXx, LYx, LZx, M4x, M5x, M6x, MFx, MGx, MHx • 4236–CTO, 64x, 65x, N4x, NAx, NBx, NDx, NEx, NFx, NPx, NQx, NRx	04W1347	N
14	System board assembly, discrete graphics, AMT, non-TPM, non-AES • 4177–CTO • 4178–CTO • 4179–CTO • 4180–CTO • 4236–CTO	04W1348	N
14	System board assembly, discrete graphics, non-AMT, TPM, AES • 4177–CTO, 22x, 23x, 24x, 2Ax, 2Bx, 2Cx, 2Kx, 2Lx, 2Mx, QEx • 4178–CTO, 5Gx, 5Hx, 5Qx, 5Sx, 94x, 9Dx, 9Ex, 9Hx, 9Jx, 9Kx, 9Lx, 9Mx, 9Nx • 4179–CTO, G9x • 4180–CTO, M3x, MAx • 4236–CTO, N9x	04W1467	N
14	System board assembly, discrete graphics, non-AMT, non-TPM, non-AES • 4177–CTO • 4178–CTO, 9Sx, 9Tx, 9Ux, 9Xx • 4179–CTO • 4180–CTO • 4236–CTO	04W1469	N
15	CPU assembly,ASM i5-2520M Processor (2.50 GHz) • 4177–CTO, 2Fx, 2Nx, Q5x, Q8x • 4178–CTO, 52x, 56x, 58x, 5Ax, 5Bx, 5Ex, 5Fx, 5Vx, 5Zx, 9Ax, 9Bx, 9Cx, 9Kx, 9Px, 9Qx, 9Tx, 9Wx • 4179–CTO, G2x, G3x, G4x, GBx • 4180–CTO, 62x, 64x, K2x, K3x, K4x, K6x, K7x, K8x, KPx, KQx, KRx, KSx, L6x, L7x, L8x, LEx, LFx, LGx, LHx, LNx, LUx, LVx, LWx, LXx, LYx, M2x, M7x, M8x, M9x, MCx, MDx, MEx, MGx, MHx, MJx • 4236–CTO, 62x, 64x, N3x, N6x, N7x, N8x, N9x, NCx, NMx, NNx	04W0492	N
15	CPU assembly,ASM i5-2540M Processor (2.60 GHz) • 4177–CTO, 2Gx, 2Px, Q2x, Q3x, Q4x • 4178–CTO, 54x, 55x, 57x, 59x, 5Wx, 9Lx • 4179–CTO • 4180–CTO, 63x, 65x, K5x, K9x, KAx, KEx, KFx, KHx, KJx, KKx, KLx, KMx, KNx, KTx, KUx, KVx, KWx, L5x, L9x, LAx, LBx, LCx, LDx, LJx, LKx, LLx, LMx, LZx, M4x, MBx • 4236–CTO, 63x, 65x, N2x, N5x, NAx, NBx, NHx, MBx	04W0493	N
15	CPU assembly,ASM i7-2620M Processor (2.70 GHz) • 4177–CTO, 2Hx, 2Jx, Q7x, QAx, QBx, QFx • 4178–CTO, 5Xx, 5Yx, 99x, 9Mx, 9Sx • 4179–CTO • 4180–CTO, KBx, KCx, KDx, KGx, KXx, KYx, KZx, L2x, L3x, L4x, LPx, LQx, M5x, M6x, MFx • 4236–CTO, N4x, NDx, NEx, NFx, NGx, NPx, NQx, NRx	04W0494	N

Table 39. Parts list—Overall (continued)

No.	FRU (Overall)	FRU no.	CRU ID
15	CPU assembly,ASM i3-2310M Processor (2.10 GHz) • 4177–CTO, 22x, 23x, 24x, 26x, 28x, 29x, 2Ax, 2Bx, 2Dx, 2Ex, QCx, QDx • 4178–CTO, 5Cx, 5Dx, 5Gx, 5Hx, 5Jx, 5Kx, 5Lx, 5Mx, 98x, 9Fx, 9Gx, 9Hx, 9Nx, 9Ux, 9Vx • 4179–CTO, G5x, G6x, G8x, G9x, • 4180–CTO, LRx, LSx, MAx • 4236–CTO, NLx	04W0495	N
15	CPU assembly,ASM i5-2410M Processor (2.30 GHz) • 4177–CTO, 25x, 27x, 2Cx, 2Kx, 2Lx, 2Mx, QEx • 4178–CTO, 53x, 5Nx, 5Px, 5Qx, 5Rx, 5Sx, 5Tx, 5Ux, 92x, 93x, 94x, 95x, 96x, 97x, 9Dx, 9Ex, 9Jx, 9Rx, 9Xx, 9Yx • 4179–CTO, G7x • 4180–CTO, LTx, M3x • 4236–CTO, NKx	04W0496	N
16	ThinkPad b/g/n Wireless (1x1 BGN) • 4177–CTO, 25x, 26x, 27x, 28x, 29x, 2Ax, 2Bx, 2Cx, 2Dx, 2Ex, 2Fx, 2Gx, 2Kx, 2Lx, 2Mx, Q7x, QDx • 4178–CTO, 53x, 9Fx, 9Gx, 9Hx, 9Jx, 9Kx, 9Lx, 9Mx, 9Nx, 9Sx, 9Tx, 9Ux, 9Vx, 9Wx, 9Xx, 9Yx • 4179–CTO, G2x, G3x, G4x, G5x, G6x, G7x, G8x, G9x • 4180–CTO, LEx, LFx, LGx, LHx, LJx, LKx, LNx, LPx, LRx, LSx, LTx, MAx • 4236–CTO, N6x, N7x, N8x, N9x, NCx, NKx, NLx	60Y3247	**
16	ThinkPad b/g/n Wireless (1x1 BGN) • 4177–CTO, 25x, 26x, 27x, 28x, 29x, 2Ax, 2Bx, 2Cx, 2Dx, 2Ex, 2Fx, 2Gx, 2Kx, 2Lx, 2Mx, Q7x, QDx • 4178–CTO, 53x, 9Fx, 9Gx, 9Hx, 9Jx, 9Kx, 9Lx, 9Mx, 9Nx, 9Sx, 9Tx, 9Ux, 9Vx, 9Wx, 9Xx, 9Yx • 4179–CTO, G2x, G3x, G4x, G5x, G6x, G7x, G8x, G9x • 4180–CTO, LEx, LFx, LGx, LHx, LJx, LKx, LNx, LPx, LRx, LSx, LTx, MAx • 4236–CTO, N6x, N7x, N8x, N9x, NCx, NKx, NLx	60Y3249	**
16	Intel® Centrino® Wireless-N 1000 • 4177–CTO • 4178–CTO • 4179–CTO • 4180–CTO • 4236–CTO	60Y3241	**
16	Intel Centrino Advanced-N 6205 (2x2 AGN) • 4177–CTO, 22x, 23x, 24x, 2Nx, 2Px, Q2x, Q3x, Q4x, Q5x • 4178–CTO, 52x, 54x, 55x, 56x, 57x, 58x, 59x, 5Ax, 5Bx, 5Cx, 5Dx, 5Ex, 5Fx, 5Gx, 5Hx, 5Jx, 5Kx, 5Lx, 5Mx, 5Nx, 5Px, 5Qx, 5Rx, 5Sx, 5Tx, 5Ux, 5Vx, 5Wx, 5Xx, 5Yx, 5Zx, 92x, 93x, 94x, 95x, 96x, 97x, 98x, 9Dx, 9Ex, 9Qx, 9Rx • 4179–CTO, GBx • 4180–CTO, 62x, 63x, 64x, 65x, K2x, K3x, K4x, K5x, K6x, K7x, K8x, K9x, KAx, KBx, KCx, KDx, KEx, KFx, KHx, KJx, KKx, KLx, KMx, KNx, KPx, KQx, KRx, KSx, KTx, KUx, KVx, KWx, L4x, L5x, L6x, L7x, L8x, L9x, LAx, LBx, LCx, LDx, LLx, LMx, LQx, LUx, LVx, LWx, LXx, LYx, LZx, M2x, M3x, M4x, M7x, M8x, M9x, MBx, MCx, MDx, MEx, MFx, MGx, MHx, MJx • 4236–CTO, 62x, 63x, 64x, 65x, N2x, N3x, N5x, NAx, NBx, NDx, NEx, NHx, NMx, NNx, MBx	60Y3253	**

Table 39. Parts list—Overall (continued)

No.	FRU (Overall)	FRU no.	CRU ID
16	Intel Centrino Ultimate-N 6300 • 4177–CTO, 2Hx, 2Jx, Q8x, QFx • 4178–CTO, 99x, 9Ax, 9Bx, 9Cx • 4179–CTO • 4180–CTO, KGx, KXx, KYx, KZx, L2x, L3x, M5x, M6x • 4236–CTO, N4x, NFx, NGx, NPx, NQx, NRx	60Y3233	**
16	Intel Centrino Advanced-N + WiMAX 6250, WW SKU • 4177–CTO, QAx, QBx, QEx • 4178–CTO, 9Px • 4179–CTO • 4180–CTO • 4236–CTO	60Y3195	**
16	Intel Centrino Advanced-N + WiMAX 6250, Russia SKU • 4177–CTO • 4178–CTO • 4179–CTO • 4180–CTO • 4236–CTO	60Y3209	**
17	Backup battery • 4177–CTO, 22x, 23x, 24x, 25x, 26x, 27x, 28x, 29x, 2Ax, 2Bx, 2Cx, 2Dx, 2Ex, 2Fx, 2Gx, 2Hx, 2Jx, 2Kx, 2Lx, 2Mx, 2Nx, 2Px, Q2x, Q3x, Q4x, Q5x, Q7x, Q8x, QAx, QBx, QCx, QDx • 4178–CTO, 52x, 53x, 54x, 55x, 56x, 57x, 58x, 59x, 5Ax, 5Bx, 5Cx, 5Dx, 5Ex, 5Fx, 5Gx, 5Hx, 5Jx, 5Kx, 5Lx, 5Mx, 5Nx, 5Px, 5Qx, 5Rx, 5Sx, 5Tx, 5Ux, 5Vx, 5Wx, 5Xx, 5Yx, 5Zx, 92x, 93x, 94x, 95x, 96x, 97x, 98x, 99x, 9Ax, 9Bx, 9Cx, 9Dx, 9Ex, 9Fx, 9Gx, 9Hx, 9Jx, 9Kx, 9Lx, 9Mx, 9Nx, 9Px, 9Qx, 9Rx, 9Sx, 9Tx, 9Ux, 9Vx, 9Wx, 9Xx, 9Yx • 4179–CTO, G2x, G3x, G4x, G5x, G6x, G7x, G8x, G9x, GBx • 4180–CTO, 62x, 63x, 64x, 65x, K2x, K3x, K4x, K5x, K6x, K7x, K8x, K9x, KAx, KBx, KCx, KDx, KEx, KFx, KGx, KHx, KJx, KKx, KLx, KMx, KNx, KPx, KQx, KRx, KSx, KTx, KUx, KVx, KWx, KXx, KYx, KZx, L2x, L3x, L4x, L5x, L6x, L7x, L8x, L9x, LAx, LBx, LCx, LDx, LEx, LFx, LGx, LHx, LJx, LKx, LLx, LMx, LNx, LPx, LQx, LRx, LSx, LTx, LUx, LVx, LWx, LXx, LYx, LZx, M2x, M3x, M4x, M5x, M6x, M7x, M8x, M9x, MAx, MBx, MCx, MDx, MEx, MFx, MGx, MHx, MJx • 4236–CTO, 62x, 63x, 64x, 65x, N2x, N3x, N4x, N5x, N6x, N7x, N8x, N9x, NAx, NBx, NCx, NDx, NEx, NFx, NGx, NHx, NKx, NLx, NMx, NNx, NPx, NQx, NRx, MBx	02K7078	**

Table 39. Parts list—Overall (continued)

No.	FRU (Overall)	FRU no.	CRU ID
17	Backup battery • 4177–CTO, 22x, 23x, 24x, 25x, 26x, 27x, 28x, 29x, 2Ax, 2Bx, 2Cx, 2Dx, 2Ex, 2Fx, 2Gx, 2Hx, 2Jx, 2Kx, 2Lx, 2Mx, 2Nx, 2Px, Q2x, Q3x, Q4x, Q5x, Q7x, Q8x, QAx, QBx, QCx, QDx • 4178–CTO, 52x, 53x, 54x, 55x, 56x, 57x, 58x, 59x, 5Ax, 5Bx, 5Cx, 5Dx, 5Ex, 5Fx, 5Gx, 5Hx, 5Jx, 5Kx, 5Lx, 5Mx, 5Nx, 5Px, 5Qx, 5Rx, 5Sx, 5Tx, 5Ux, 5Vx, 5Wx, 5Xx, 5Yx, 5Zx, 92x, 93x, 94x, 95x, 96x, 97x, 98x, 99x, 9Ax, 9Bx, 9Cx, 9Dx, 9Ex, 9Fx, 9Gx, 9Hx, 9Jx, 9Kx, 9Lx, 9Mx, 9Nx, 9Px, 9Qx, 9Rx, 9Sx, 9Tx, 9Ux, 9Vx, 9Wx, 9Xx, 9Yx • 4179–CTO, G2x, G3x, G4x, G5x, G6x, G7x, G8x, G9x, GBx • 4180–CTO, 62x, 63x, 64x, 65x, K2x, K3x, K4x, K5x, K6x, K7x, K8x, K9x, KAx, KBx, KCx, KDx, KEx, KFx, KGx, KHx, KJx, KKx, KLx, KMx, KNx, KPx, KQx, KRx, KSx, KTx, KUx, KVx, KWx, KXx, KYx, KZx, L2x, L3x, L4x, L5x, L6x, L7x, L8x, L9x, LAx, LBx, LCx, LDx, LEx, LFx, LGx, LHx, LJx, LKx, LLx, LMx, LNx, LPx, LQx, LRx, LSx, LTx, LUx, LVx, LWx, LXx, LYx, LZx, M2x, M3x, M4x, M5x, M6x, M7x, M8x, M9x, MAx, MBx, MCx, MDx, MEx, MFx, MGx, MHx, MJx • 4236–CTO, 62x, 63x, 64x, 65x, N2x, N3x, N4x, N5x, N6x, N7x, N8x, N9x, NAx, NBx, NCx, NDx, NEx, NFx, NGx, NHx, NKx, NLx, NMx, NNx, NPx, NQx, NRx, MBx	04W1642	**
18	DC-in cable	04W1635	N
19	SmartCard Reader FPC cable • 4177–CTO, 2Fx, 2Gx, 2Hx, Q7x, Q8x, QAx, QBx • 4178–CTO, 5Lx, 5Mx, 5Nx, 5Px, 5Qx, 5Rx, 5Sx, 5Tx, 5Ux, 5Vx, 5Wx, 5Xx, 5Yx, 5Zx, 92x, 93x, 94x, 95x, 96x, 97x, 98x, 99x, 9Ax, 9Bx, 9Cx • 4179–CTO • 4180–CTO, KEx, KFx, L9x, LAx, LBx, LPx, LQx, LVx, LXx, M8x, MCx, MDx, MEx • 4236–CTO, N3x, NDx, NEx	04W1639	N
20	SmartCard Reader • 4177–CTO, 2Fx, 2Gx, 2Hx, Q7x, Q8x, QAx, QBx • 4178–CTO, 5Lx, 5Mx, 5Nx, 5Px, 5Qx, 5Rx, 5Sx, 5Tx, 5Ux, 5Vx, 5Wx, 5Xx, 5Yx, 5Zx, 92x, 93x, 94x, 95x, 96x, 97x, 98x, 99x, 9Ax, 9Bx, 9Cx • 4179–CTO • 4180–CTO, KEx, KFx, L9x, LAx, LBx, LPx, LQx, LVx, LXx, M8x, MCx, MDx, MEx • 4236–CTO, N3x, NDx, NEx	04W1638	N
21	Fan assembly, integrated • 4177–CTO, 25x, 26x, 27x, 28x, 29x, 2Dx, 2Ex, 2Fx, 2Gx, 2Hx, Q2x, Q5x, Q7x, Q8x, QAx, QCx, QDx, QFx • 4178–CTO, 52x, 53x, 56x, 57x, 59x, 5Ax, 5Bx, 5Cx, 5Dx, 5Jx, 5Kx, 5Lx, 5Mx, 5Nx, 5Px, 5Rx, 5Tx, 5Ux, 5Vx, 5Wx, 5Xx, 92x, 93x, 95x, 96x, 97x, 98x, 9Bx, 9Cx, 9Fx, 9Gx, 9Px, 9Qx, 9Rx, 9Vx, 9Wx, 9Yx • 4179–CTO, G2x, G3x, G4x, G5x, G6x, G7x, G8x, GBx • 4180–CTO, 62x, 63x, K2x, K3x, K4x, K5x, K6x, K7x, K8x, K9x, KAx, KBx, KCx, KDx, KEx, KFx, KGx, KHx, KJx, KKx, LDx, LEx, LFx, LGx, LHx, LJx, LKx, LNx, LPx, LRx, LSx, LTx, LUx, LWx, M2x, M7x, M8x, M9x, MBx, MCx, MDx, MEx, MJx • 4236–CTO, 62x, 63x, N2x, N3x, N5x, N6x, N7x, N8x, NCx, NGx, NHx, NKx, NLx, NMx, NNx, MBx	04W0407	N

Table 39. Parts list—Overall (continued)

No.	FRU (Overall)	FRU no.	CRU ID
21	Fan assembly, integrated • 4177–CTO, 25x, 26x, 27x, 28x, 29x, 2Dx, 2Ex, 2Fx, 2Gx, 2Hx, Q2x, Q5x, Q7x, Q8x, QAx, QCx, QDx, QFx • 4178–CTO, 52x, 53x, 56x, 57x, 59x, 5Ax, 5Bx, 5Cx, 5Dx, 5Jx, 5Kx, 5Lx, 5Mx, 5Nx, 5Px, 5Rx, 5Tx, 5Ux, 5Vx, 5Wx, 5Xx, 92x, 93x, 95x, 96x, 97x, 98x, 9Bx, 9Cx, 9Fx, 9Gx, 9Px, 9Qx, 9Rx, 9Vx, 9Wx, 9Yx • 4179–CTO, G2x, G3x, G4x, G5x, G6x, G7x, G8x, GBx • 4180–CTO, 62x, 63x, K2x, K3x, K4x, K5x, K6x, K7x, K8x, K9x, KAx, KBx, KCx, KDx, KEx, KFx, KGx, KHx, KJx, KKx, LDx, LEx, LFx, LGx, LHx, LJx, LKx, LNx, LPx, LRx, LSx, LTx, LUx, LWx, M2x, M7x, M8x, M9x, MBx, MCx, MDx, MEx, MJx • 4236–CTO, 62x, 63x, N2x, N3x, N5x, N6x, N7x, N8x, NCx, NGx, NHx, NKx, NLx, NMx, NNx, MBx	04W0409	N
21	Fan assembly, discrete • 4177–CTO, 22x, 23x, 24x, 2Ax, 2Bx, 2Cx, 2Jx, 2Kx, 2Lx, 2Mx, 2Nx, 2Px, Q3x, Q4x, QBx, QFx, QEx • 4178–CTO, 54x, 55x, 58x, 5Ex, 5Fx, 5Gx, 5Hx, 5Qx, 5Sx, 5Yx, 5Zx, 94x, 99x, 9Ax, 9Dx, 9Ex, 9Hx, 9Jx, 9Kx, 9Lx, 9Mx, 9Nx, 9Sx, 9Tx, 9Ux, 9Xx • 4179–CTO, G9x • 4180–CTO, 64x, 65x, KLx, KMx, KNx, KPx, KQx, KRx, KSx, KTx, KUx, KVx, KWx, KXx, KYx, KZx, L2x, L3x, L4x, L5x, L6x, L7x, L8x, L9x, LAx, LBx, LCx, LLx, LMx, LQx, LVx, LXx, LYx, LZx, M3x, M4x, M5x, M6x, MAx, MFx, MGx, MHx • 4236–CTO, 64x, 65x, N4x, N9x, NAx, NBx, NDx, NEx, NFx, NPx, NQx, NRx	04W0408	N
21	Fan assembly, discrete • 4177–CTO, 22x, 23x, 24x, 2Ax, 2Bx, 2Cx, 2Jx, 2Kx, 2Lx, 2Mx, 2Nx, 2Px, Q3x, Q4x, QBx, QFx, QEx • 4178–CTO, 54x, 55x, 58x, 5Ex, 5Fx, 5Gx, 5Hx, 5Qx, 5Sx, 5Yx, 5Zx, 94x, 99x, 9Ax, 9Dx, 9Ex, 9Hx, 9Jx, 9Kx, 9Lx, 9Mx, 9Nx, 9Sx, 9Tx, 9Ux, 9Xx • 4179–CTO, G9x • 4180–CTO, 64x, 65x, KLx, KMx, KNx, KPx, KQx, KRx, KSx, KTx, KUx, KVx, KWx, KXx, KYx, KZx, L2x, L3x, L4x, L5x, L6x, L7x, L8x, L9x, LAx, LBx, LCx, LLx, LMx, LQx, LVx, LXx, LYx, LZx, M3x, M4x, M5x, M6x, MAx, MFx, MGx, MHx • 4236–CTO, 64x, 65x, N4x, N9x, NAx, NBx, NDx, NEx, NFx, NPx, NQx, NRx	04W0410	N
22	FPC cable (touch pad with fingerprint reader and Bluetooth) • 4177–CTO, 22x, 23x, 24x, 25x, 26x, 27x, 28x, 29x, 2Ax, 2Bx, 2Cx, 2Dx, 2Ex, 2Fx, 2Gx, 2Hx, 2Jx, 2Kx, 2Lx, 2Mx, 2Nx, 2Px, Q2x, Q3x, Q4x, Q5x, Q7x, Q8x, QAx, QBx, QCx, QDx • 4178–CTO, 52x, 53x, 54x, 55x, 56x, 57x, 58x, 59x, 5Ax, 5Bx, 5Cx, 5Dx, 5Ex, 5Fx, 5Gx, 5Hx, 5Jx, 5Kx, 5Lx, 5Mx, 5Nx, 5Px, 5Qx, 5Rx, 5Sx, 5Tx, 5Ux, 5Vx, 5Wx, 5Xx, 5Yx, 5Zx, 92x, 93x, 94x, 95x, 96x, 97x, 98x, 99x, 9Ax, 9Bx, 9Cx, 9Dx, 9Ex, 9Fx, 9Gx, 9Hx, 9Jx, 9Kx, 9Lx, 9Mx, 9Nx, 9Px, 9Qx, 9Rx, 9Sx, 9Tx, 9Ux, 9Vx, 9Wx, 9Xx, 9Yx • 4179–CTO, G2x, G3x, G4x, G5x, G6x, G7x, G8x, G9x, GBx • 4180–CTO, 62x, 63x, 64x, 65x, K2x, K3x, K4x, K5x, K6x, K7x, K8x, K9x, KAx, KBx, KCx, KDx, KEx, KFx, KGx, KHx, KJx, KKx, KLx, KMx, KNx, KPx, KQx, KRx, KSx, KTx, KUx, KVx, KWx, KXx, KYx, KZx, L2x, L3x, L4x, L5x, L6x, L7x, L8x, L9x, LAx, LBx, LCx, LDx, LEx, LFx, LGx, LHx, LJx, LKx, LLx, LMx, LNx, LPx, LQx, LRx, LSx, LTx, LUx, LVx, LWx, LXx, LYx, LZx, M2x, M3x, M4x, M5x, M6x, M7x, M8x, M9x, MAx, MBx, MCx, MDx, MEx, MFx, MGx, MHx, MJx • 4236–CTO, 62x, 63x, 64x, 65x, N2x, N3x, N4x, N5x, N6x, N7x, N8x, N9x, NAx, NBx, NCx, NDx, NEx, NFx, NGx, NHx, NKx, NLx, NMx, NNx, NPx, NQx, NRx, MBx	04W1625	N

Table 39. Parts list—Overall (continued)

No.	FRU (Overall)	FRU no.	CRU ID
23	*Bluetooth* daughter card (BDC-3.0) • 4177–CTO, 22x, 23x, 24x, 25x, 27x, 29x, 2Ax, 2Bx, 2Cx, 2Dx, 2Ex, 2Fx, 2Gx, 2Hx, 2Jx, 2Kx, 2Lx, 2Mx, 2Nx, 2Px, Q2x, Q3x, Q4x, Q7x, Q8x, QAx, QBx, QDx, QEx • 4178–CTO, 52x, 53x, 54x, 55x, 56x, 57x, 58x, 59x, 5Ax, 5Bx, 5Cx, 5Dx, 5Ex, 5Fx, 5Gx, 5Hx, 5Jx, 5Kx, 5Lx, 5Mx, 5Nx, 5Px, 5Qx, 5Rx, 5Sx, 5Tx, 5Ux, 5Vx, 5Wx, 5Xx, 5Yx, 5Zx, 92x, 93x, 94x, 95x, 96x, 97x, 98x, 99x, 9Ax, 9Bx, 9Cx, 9Dx, 9Ex, 9Fx, 9Gx, 9Hx, 9Jx, 9Kx, 9Lx, 9Mx, 9Nx, 9Px, 9Qx, 9Rx, 9Sx, 9Tx, 9Ux, 9Vx, 9Wx, 9Xx, 9Yx • 4179–CTO, G2x, G3x, G4x, G5x, G6x, G7x, G8x, G9x, GBx • 4180–CTO, 62x, 63x, 64x, 65x, K2x, K3x, K4x, K5x, K6x, K7x, K8x, K9x, KAx, KBx, KCx, KDx, KEx, KFx, KGx, KHx, KJx, KKx, KLx, KMx, KNx, KPx, KQx, KRx, KSx, KTx, KUx, KVx, KWx, KXx, KYx, KZx, L2x, L3x, L4x, L5x, L6x, L7x, L8x, L9x, LAx, LBx, LEx, LFx, LGx, LHx, LJx, LKx, LLx, LMx, LNx, LPx, LQx, LRx, LSx, LTx, LUx, LVx, LWx, LXx, LYx, LZx, M2x, M3x, M4x, M5x, M6x, M7x, M8x, M9x, MAx, MBx, MCx, MDx, MEx, MFx, MGx, MHx, MJx • 4236–CTO, 62x, 63x, 64x, 65x, N2x, N3x, N4x, N5x, N6x, N7x, N8x, N9x, NAx, NBx, NCx, NDx, NEx, NFx, NGx, NHx, NKx, NLx, NMx, NNx, NPx, NQx, NRx, MBx	60Y3271	N
23	*Bluetooth* daughter card (BDC-3.0) • 4177–CTO, 22x, 23x, 24x, 25x, 27x, 29x, 2Ax, 2Bx, 2Cx, 2Dx, 2Ex, 2Fx, 2Gx, 2Hx, 2Jx, 2Kx, 2Lx, 2Mx, 2Nx, 2Px, Q2x, Q3x, Q4x, Q7x, Q8x, QAx, QBx, QDx, QEx • 4178–CTO, 52x, 53x, 54x, 55x, 56x, 57x, 58x, 59x, 5Ax, 5Bx, 5Cx, 5Dx, 5Ex, 5Fx, 5Gx, 5Hx, 5Jx, 5Kx, 5Lx, 5Mx, 5Nx, 5Px, 5Qx, 5Rx, 5Sx, 5Tx, 5Ux, 5Vx, 5Wx, 5Xx, 5Yx, 5Zx, 92x, 93x, 94x, 95x, 96x, 97x, 98x, 99x, 9Ax, 9Bx, 9Cx, 9Dx, 9Ex, 9Fx, 9Gx, 9Hx, 9Jx, 9Kx, 9Lx, 9Mx, 9Nx, 9Px, 9Qx, 9Rx, 9Sx, 9Tx, 9Ux, 9Vx, 9Wx, 9Xx, 9Yx • 4179–CTO, G2x, G3x, G4x, G5x, G6x, G7x, G8x, G9x, GBx • 4180–CTO, 62x, 63x, 64x, 65x, K2x, K3x, K4x, K5x, K6x, K7x, K8x, K9x, KAx, KBx, KCx, KDx, KEx, KFx, KGx, KHx, KJx, KKx, KLx, KMx, KNx, KPx, KQx, KRx, KSx, KTx, KUx, KVx, KWx, KXx, KYx, KZx, L2x, L3x, L4x, L5x, L6x, L7x, L8x, L9x, LAx, LBx, LEx, LFx, LGx, LHx, LJx, LKx, LLx, LMx, LNx, LPx, LQx, LRx, LSx, LTx, LUx, LVx, LWx, LXx, LYx, LZx, M2x, M3x, M4x, M5x, M6x, M7x, M8x, M9x, MAx, MBx, MCx, MDx, MEx, MFx, MGx, MHx, MJx • 4236–CTO, 62x, 63x, 64x, 65x, N2x, N3x, N4x, N5x, N6x, N7x, N8x, N9x, NAx, NBx, NCx, NDx, NEx, NFx, NGx, NHx, NKx, NLx, NMx, NNx, NPx, NQx, NRx, MBx	60Y3275	N
24	Keyboard (see “Keyboard” on page 166.)		
25	TrackPoint caps	91P9642	*
26	RJ11 cable with connector • 4177–CTO, 22x, 23x, 24x, 25x, 29x, 2Ax, 2Bx, 2Cx, 2Ex, 2Jx, Q4x, Q7x, QAx, QCx • 4178–CTO, 5Ax, 5Bx, 5Cx, 5Dx, 5Ex, 5Fx, 5Gx, 5Hx, 5Jx, 5Kx, 5Lx, 5Mx, 5Nx, 5Px, 5Qx, 5Rx, 5Sx, 5Tx, 5Ux, 5Vx, 5Wx, 5Xx, 5Yx, 5Zx, 92x, 93x, 94x, 95x, 96x, 97x, 98x, 99x, 9Ax, 9Bx, 9Cx, 9Dx, 9Ex, 9Rx • 4179–CTO, G2x, G3x, G4x, G5x, G6x, G7x, G8x, G9x • 4180–CTO, K2x, K3x, K4x, K5x, K6x, K7x, K8x, K9x, KAx, KBx, KCx, KDx, KEx, KFx, KGx, KHx, KJx, KKx, KLx, KMx, KNx, KPx, KQx, KRx, KSx, KTx, KUx, KVx, KWx, KXx, KYx, KZx, L2x, L3x, L4x, L5x, L6x, L7x, L8x, L9x, LAx, LBx, LCx, LDx, LEx, LFx, LGx, LHx, LJx, LKx, LLx, LMx, LNx, LPx, LQx, LRx, LSx, LTx, LYx, LZx, M2x, M3x, M4x, M5x, M6x, M9x, MAx, MBx, MCx, MDx, MEx, MFx, MGx • 4236–CTO, N2x, N3x, N4x, N5x, N6x, N7x, N8x, N9x, NAx, NBx, NCx, NDx, NEx, NFx, NGx, NHx, NKx, NLx, NMx, NNx, NPx, NQx, NRx, MBx	04W1632	N
27	DIMM slot door	04W1636	**
28	HDD cover	04W1637	**

Table 39. Parts list—Overall (continued)

No.	FRU (Overall)	FRU no.	CRU ID
29	Audio sub card • 4177–CTO, 22x, 23x, 24x, 25x, 26x, 27x, 28x, 29x, 2Ax, 2Bx, 2Cx, 2Dx, 2Ex, 2Fx, 2Gx, 2Hx, 2Jx, 2Kx, 2Lx, 2Mx, 2Nx, 2Px, Q2x, Q3x, Q4x, Q5x, Q7x, Q8x, QAx, QBx, QCx, QDx • 4178–CTO, 52x, 53x, 54x, 55x, 56x, 57x, 58x, 59x, 5Ax, 5Bx, 5Cx, 5Dx, 5Ex, 5Fx, 5Gx, 5Hx, 5Jx, 5Kx, 5Lx, 5Mx, 5Nx, 5Px, 5Qx, 5Rx, 5Sx, 5Tx, 5Ux, 5Vx, 5Wx, 5Xx, 5Yx, 5Zx, 92x, 93x, 94x, 95x, 96x, 97x, 98x, 99x, 9Ax, 9Bx, 9Cx, 9Dx, 9Ex, 9Fx, 9Gx, 9Hx, 9Jx, 9Kx, 9Lx, 9Mx, 9Nx, 9Px, 9Qx, 9Rx, 9Sx, 9Tx, 9Ux, 9Vx, 9Wx, 9Xx, 9Yx • 4179–CTO, G2x, G3x, G4x, G5x, G6x, G7x, G8x, G9x, GBx • 4180–CTO, 62x, 63x, 64x, 65x, K2x, K3x, K4x, K5x, K6x, K7x, K8x, K9x, KAx, KBx, KCx, KDx, KEx, KFx, KGx, KHx, KJx, KKx, KLx, KMx, KNx, KPx, KQx, KRx, KSx, KTx, KUx, KVx, KWx, KXx, KYx, KZx, L2x, L3x, L4x, L5x, L6x, L7x, L8x, L9x, LAx, LBx, LCx, LDx, LEx, LFx, LGx, LHx, LJx, LKx, LLx, LMx, LNx, LPx, LQx, LRx, LSx, LTx, LUx, LVx, LWx, LXx, LYx, LZx, M2x, M3x, M4x, M5x, M6x, M7x, M8x, M9x, MAx, MBx, MCx, MDx, MEx, MFx, MGx, MHx, MJx • 4236–CTO, 62x, 63x, 64x, 65x, N2x, N3x, N4x, N5x, N6x, N7x, N8x, N9x, NAx, NBx, NCx, NDx, NEx, NFx, NGx, NHx, NKx, NLx, NMx, NNx, NPx, NQx, NRx, MBx	04W1623	N
30	Audio sub card cable • 4177–CTO, 22x, 23x, 24x, 25x, 26x, 27x, 28x, 29x, 2Ax, 2Bx, 2Cx, 2Dx, 2Ex, 2Fx, 2Gx, 2Hx, 2Jx, 2Kx, 2Lx, 2Mx, 2Nx, 2Px, Q2x, Q3x, Q4x, Q5x, Q7x, Q8x, QAx, QBx, QCx, QDx • 4178–CTO, 52x, 53x, 54x, 55x, 56x, 57x, 58x, 59x, 5Ax, 5Bx, 5Cx, 5Dx, 5Ex, 5Fx, 5Gx, 5Hx, 5Jx, 5Kx, 5Lx, 5Mx, 5Nx, 5Px, 5Qx, 5Rx, 5Sx, 5Tx, 5Ux, 5Vx, 5Wx, 5Xx, 5Yx, 5Zx, 92x, 93x, 94x, 95x, 96x, 97x, 98x, 99x, 9Ax, 9Bx, 9Cx, 9Dx, 9Ex, 9Fx, 9Gx, 9Hx, 9Jx, 9Kx, 9Lx, 9Mx, 9Nx, 9Px, 9Qx, 9Rx, 9Sx, 9Tx, 9Ux, 9Vx, 9Wx, 9Xx, 9Yx • 4179–CTO, G2x, G3x, G4x, G5x, G6x, G7x, G8x, G9x, GBx • 4180–CTO, 62x, 63x, 64x, 65x, K2x, K3x, K4x, K5x, K6x, K7x, K8x, K9x, KAx, KBx, KCx, KDx, KEx, KFx, KGx, KHx, KJx, KKx, KLx, KMx, KNx, KPx, KQx, KRx, KSx, KTx, KUx, KVx, KWx, KXx, KYx, KZx, L2x, L3x, L4x, L5x, L6x, L7x, L8x, L9x, LAx, LBx, LCx, LDx, LEx, LFx, LGx, LHx, LJx, LKx, LLx, LMx, LNx, LPx, LQx, LRx, LSx, LTx, LUx, LVx, LWx, LXx, LYx, LZx, M2x, M3x, M4x, M5x, M6x, M7x, M8x, M9x, MAx, MBx, MCx, MDx, MEx, MFx, MGx, MHx, MJx • 4236–CTO, 62x, 63x, 64x, 65x, N2x, N3x, N4x, N5x, N6x, N7x, N8x, N9x, NAx, NBx, NCx, NDx, NEx, NFx, NGx, NHx, NKx, NLx, NMx, NNx, NPx, NQx, NRx, MBx	04W1624	N
31	Slice battery • 4177–CTO • 4178–CTO • 4179–CTO • 4180–CTO • 4236–CTO	42T4739	*
32	mSATA • 4177–CTO, Q3x, QAx, QCx • 4178–CTO, 5Ux, 9Cx • 4179–CTO • 4180–CTO, M6x • 4236–CTO	45N8259	N

Table 39. Parts list—Overall (continued)

No.	FRU (Overall)	FRU no.	CRU ID
—	Thermal grease	91P8835	N
—	ac power adapter (see “Information about ac power adapters” on page 170.)		

LCD FRUs

In ThinkPad T420 and T420i, there are following types of LCDs.

- 14.0-inch HD (1366 x 768) LED backlight Anti-Glare Display (Table 40 “Parts list—14.0-inch HD (1366 x 768) LED Backlight Anti-Glare Display” on page 155)
- 14.0-inch HD+ (1600 x 900) LED backlight Anti-Glare Display (Table 41 “Parts list—14.0-inch HD+ (1600 x 900) LED backlight Anti-Glare Display” on page 161)

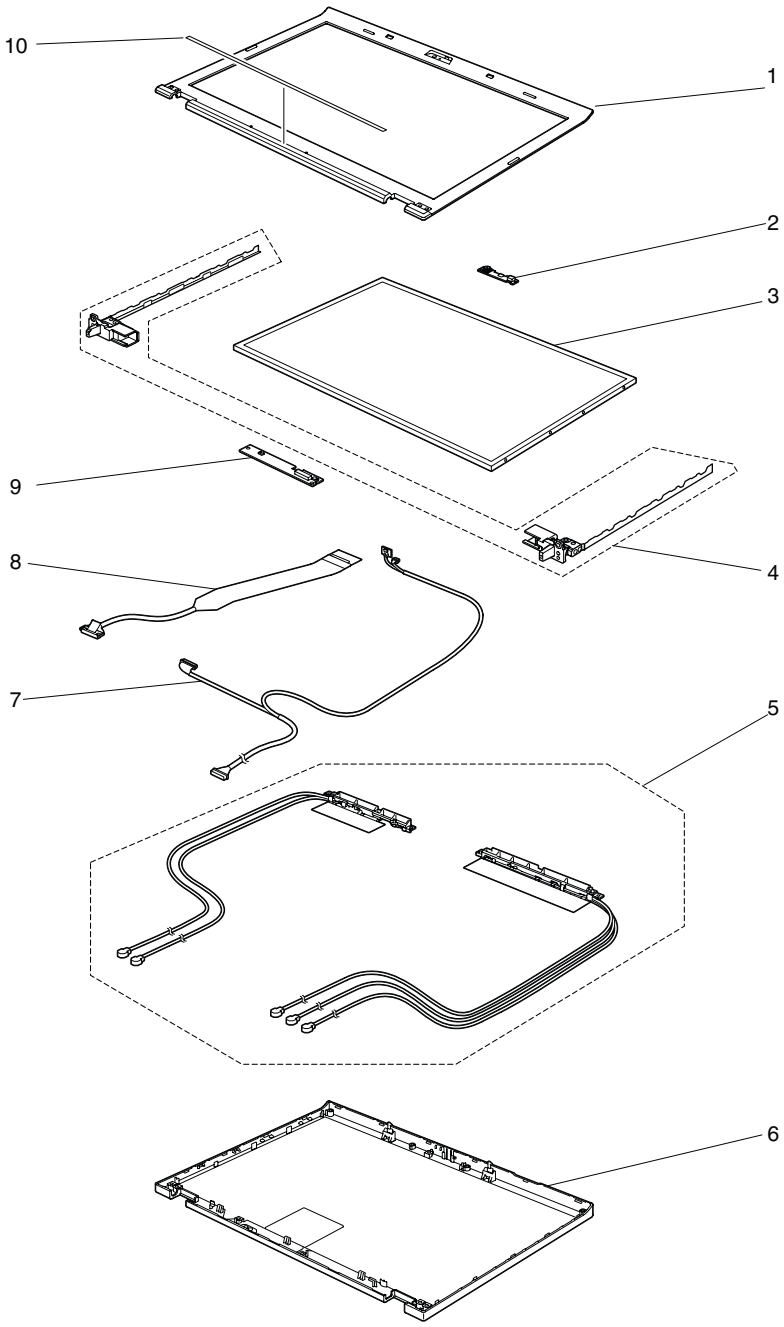

Table 40. Parts list—14.0-inch HD (1366 x 768) LED Backlight Anti-Glare Display

No.	FRU (14.0-inch HD (1366 x 768) LED backlight Anti-Glare Display)	FRU no.	CRU ID
a, b	See “Miscellaneous parts” on page 167.		

Table 40. Parts list—14.0-inch HD (1366 x 768) LED Backlight Anti-Glare Display (continued)

No.	FRU (14.0-inch HD (1366 x 768) LED backlight Anti-Glare Display)	FRU no.	CRU ID
1	LCD bezel assembly • 4177–CTO, 22x, 23x, 24x, 25x, 26x, 27x, 28x, 29x, 2Ax, 2Bx, 2Cx, 2Dx, 2Ex, 2Fx, 2Gx, 2Hx, 2Jx, 2Kx, 2Lx, 2Mx, 2Nx, 2Px, Q2x, Q3x, Q4x, Q5x, Q7x, Q8x, QAx, QBx, QCx, QDx • 4178–CTO, 52x, 53x, 54x, 55x, 56x, 57x, 58x, 59x, 5Ax, 5Bx, 5Cx, 5Dx, 5Ex, 5Fx, 5Gx, 5Hx, 5Jx, 5Kx, 5Lx, 5Mx, 5Nx, 5Px, 5Qx, 5Rx, 5Sx, 5Tx, 5Ux, 5Vx, 5Wx, 5Xx, 5Yx, 5Zx, 92x, 93x, 94x, 95x, 96x, 97x, 98x, 99x, 9Ax, 9Bx, 9Cx, 9Dx, 9Ex, 9Fx, 9Gx, 9Hx, 9Jx, 9Kx, 9Lx, 9Mx, 9Nx, 9Px, 9Qx, 9Rx, 9Sx, 9Tx, 9Ux, 9Vx, 9Wx, 9Xx, 9Yx • 4179–CTO, G2x, G3x, G4x, G5x, G6x, G7x, G8x, G9x, GBx • 4180–CTO, 62x, 63x, 64x, 65x, K2x, K3x, K4x, K5x, K6x, K7x, K8x, K9x, KAx, KBx, KCx, KDx, KEx, KFx, KGx, KHx, KJx, KKx, KLx, KMx, KNx, KPx, KQx, KRx, KSx, KTx, KUx, KVx, KWx, KXx, KYx, KZx, L2x, L3x, L4x, L5x, L6x, L7x, L8x, L9x, LAx, LBx, LCx, LDx, LEx, LFx, LGx, LHx, LJx, LKx, LLx, LMx, LNx, LPx, LQx, LRx, LSx, LTx, LUx, LVx, LWx, LXx, LYx, LZx, M2x, M3x, M4x, M5x, M6x, M7x, M8x, M9x, MAx, MBx, MCx, MDx, MEx, MFx, MGx, MHx, MJx • 4236–CTO, 62x, 63x, 64x, 65x, N2x, N3x, N4x, N5x, N6x, N7x, N8x, N9x, NAx, NBx, NCx, NDx, NEx, NFx, NGx, NHx, NKx, NLx, NMx, NNx, NPx, NQx, NRx, MBx	04W1609	N
2	Camera module • 4177–CTO, 22x, 23x, 24x, 25x, 26x, 27x, 28x, 29x, 2Ax, 2Bx, 2Cx, 2Dx, 2Ex, 2Fx, 2Gx, 2Hx, 2Jx, 2Kx, 2Lx, 2Mx, 2Nx, 2Px, Q2x, Q3x, Q4x, Q5x, Q8x, QAx, QBx, QDx, QEx • 4178–CTO, 52x, 53x, 54x, 55x, 56x, 57x, 58x, 59x, 5Ax, 5Bx, 5Cx, 5Dx, 5Ex, 5Fx, 5Gx, 5Hx, 5Jx, 5Kx, 5Lx, 5Mx, 5Nx, 5Px, 5Qx, 5Rx, 5Sx, 5Tx, 5Ux, 5Vx, 5Wx, 5Xx, 5Yx, 5Zx, 92x, 93x, 94x, 95x, 96x, 97x, 98x, 99x, 9Ax, 9Bx, 9Cx, 9Dx, 9Ex, 9Fx, 9Gx, 9Hx, 9Jx, 9Kx, 9Lx, 9Mx, 9Nx, 9Px, 9Qx, 9Rx, 9Sx, 9Tx, 9Ux, 9Vx, 9Wx, 9Xx, 9Yx • 4179–CTO, G3x, G4x, G5x, G6x, G7x, G8x, G9x, GBx • 4180–CTO, 62x, 63x, 64x, 65x, K7x, K8x, K9x, KAx, KBx, KCx, KDx, KEx, KFx, KGx, KHx, KJx, KKx, KLx, KMx, KNx, KQx, KRx, KSx, KTx, KUx, KVx, KWx, KXx, KYx, KZx, L2x, L3x, L4x, L5x, L6x, L7x, L8x, L9x, LAx, LBx, LCx, LDx, LFx, LGx, LHx, LLx, LMx, LNx, LPx, LQx, LRx, LSx, LTx, LVx, LWx, LXx, LYx, LZx, M2x, M3x, M4x, M5x, M6x, M7x, M8x, M9x, MAx, MBx, MCx, MDx, MEx, MGx, MHx, MJx • 4236–CTO, 62x, 63x, 64x, 65x, N2x, N4x, N5x, N7x, N8x, N9x, NAx, NBx, NCx, NDx, NEx, NFx, NGx, NHx, NKx, NLx, NPx, NQx, NRx, MBx	60Y9994	N
2	Camera module (No camera and with microphone) • 4177–CTO, Q7x, QCx • 4178–CTO • 4179–CTO, G2x • 4180–CTO, K2x, K3x, K4x, K5x, K6x, KPx, LEx, LJx, LKx, LUx, MFx • 4236–CTO, N3x, N6x, NMx, NNx	04W1613	N
2	Camera module (No camera and no integrated microphone) • 4177–CTO • 4178–CTO • 4179–CTO • 4180–CTO • 4236–CTO	04W1614	N
3	LCD module, 14.0-inch HD (1366 x 768) LED backlight Anti-Glare Display • 4177–CTO, 22x, 23x, 24x, 25x, 26x, 27x, 28x, 29x, 2Ax, 2Bx, 2Cx, 2Dx, 2Ex, 2Fx, 2Gx, 2Hx, 2Jx, 2Mx, Q4x, Q5x, Q7x, QCx, QDx, QEx • 4178–CTO, 52x, 53x, 56x, 57x, 5Ax, 5Bx, 5Cx, 5Dx, 5Ex, 5Fx, 5Gx, 5Hx, 5Jx, 5Kx, 5Lx, 5Mx, 92x, 93x, 94x, 95x, 98x, 9Dx, 9Ex, 9Fx, 9Gx, 9Hx, 9Nx, 9Ux, 9Vx, 9Wx, 9Yx • 4179–CTO, G2x, G3x, G4x, G5x, G6x, G7x, G8x, G9x, GBx • 4180–CTO, 62x, 64x, K2x, K3x, K4x, K5x, K6x, K7x, K8x, K9x, KAx, KBx, KCx, KDx, KEx, KFx, KGx, KLx, KMx, KNx, L7x, L8x, L9x, LCx, LDx, LEx, LFx, LGx, LHx, LJx, LKx, LLx, LMx, LNx, LPx, LRx, LSx, LTx, LUx, LVx, LWx, LXx, LYx, M2x, M3x, M4x, M5x, M6x, M7x, M9x, MAx, MCx, MGx • 4236–CTO, 62x, 64x, N2x, N3x, N5x, NCx, NDx, NKx, NLx, NMx, NPx, NQx, NRx	93P5691	N

Table 40. Parts list—14.0-inch HD (1366 x 768) LED Backlight Anti-Glare Display (continued)

No.	FRU (14.0-inch HD (1366 x 768) LED backlight Anti-Glare Display)	FRU no.	CRU ID
3	LCD module, 14.0-inch HD (1366 x 768) LED backlight Anti-Glare Display • 4177–CTO, 22x, 23x, 24x, 25x, 26x, 27x, 28x, 29x, 2Ax, 2Bx, 2Cx, 2Dx, 2Ex, 2Fx, 2Gx, 2Hx, 2Jx, 2Mx, Q4x, Q5x, Q7x, QCx, QDx, QEx • 4178–CTO, 52x, 53x, 56x, 57x, 5Ax, 5Bx, 5Cx, 5Dx, 5Ex, 5Fx, 5Gx, 5Hx, 5Jx, 5Kx, 5Lx, 5Mx, 92x, 93x, 94x, 95x, 98x, 9Dx, 9Ex, 9Fx, 9Gx, 9Hx, 9Nx, 9Ux, 9Vx, 9Wx, 9Yx • 4179–CTO, G2x, G3x, G4x, G5x, G6x, G7x, G8x, G9x, GBx • 4180–CTO, 62x, 64x, K2x, K3x, K4x, K5x, K6x, K7x, K8x, K9x, KAx, KBx, KCx, KDx, KEx, KFx, KGx, KLx, KMx, KNx, L7x, L8x, L9x, LCx, LDx, LEx, LFx, LGx, LHx, LJx, LKx, LLx, LMx, LNx, LPx, LRx, LSx, LTx, LUx, LVx, LWx, LXx, LYx, M2x, M3x, M4x, M5x, M6x, M7x, M9x, MAx, MCx, MGx • 4236–CTO, 62x, 64x, N2x, N3x, N5x, NCx, NDx, NKx, NLx, NMx, NPx, NQx, NRx	93P5687	N
3	LCD module, 14.0-inch HD (1366 x 768) LED backlight Anti-Glare Display • 4177–CTO, 22x, 23x, 24x, 25x, 26x, 27x, 28x, 29x, 2Ax, 2Bx, 2Cx, 2Dx, 2Ex, 2Fx, 2Gx, 2Hx, 2Jx, 2Mx, Q4x, Q5x, Q7x, QCx, QDx, QEx • 4178–CTO, 52x, 53x, 56x, 57x, 5Ax, 5Bx, 5Cx, 5Dx, 5Ex, 5Fx, 5Gx, 5Hx, 5Jx, 5Kx, 5Lx, 5Mx, 92x, 93x, 94x, 95x, 98x, 9Dx, 9Ex, 9Fx, 9Gx, 9Hx, 9Nx, 9Ux, 9Vx, 9Wx, 9Yx • 4179–CTO, G2x, G3x, G4x, G5x, G6x, G7x, G8x, G9x, GBx • 4180–CTO, 62x, 64x, K2x, K3x, K4x, K5x, K6x, K7x, K8x, K9x, KAx, KBx, KCx, KDx, KEx, KFx, KGx, KLx, KMx, KNx, L7x, L8x, L9x, LCx, LDx, LEx, LFx, LGx, LHx, LJx, LKx, LLx, LMx, LNx, LPx, LRx, LSx, LTx, LUx, LVx, LWx, LXx, LYx, M2x, M3x, M4x, M5x, M6x, M7x, M9x, MAx, MCx, MGx • 4236–CTO, 62x, 64x, N2x, N3x, N5x, NCx, NDx, NKx, NLx, NMx, NPx, NQx, NRx	04W0476	N
3	LCD module, 14.0-inch HD (1366 x 768) LED backlight Anti-Glare Display • 4177–CTO, 22x, 23x, 24x, 25x, 26x, 27x, 28x, 29x, 2Ax, 2Bx, 2Cx, 2Dx, 2Ex, 2Fx, 2Gx, 2Hx, 2Jx, 2Mx, Q4x, Q5x, Q7x, QCx, QDx, QEx • 4178–CTO, 52x, 53x, 56x, 57x, 5Ax, 5Bx, 5Cx, 5Dx, 5Ex, 5Fx, 5Gx, 5Hx, 5Jx, 5Kx, 5Lx, 5Mx, 92x, 93x, 94x, 95x, 98x, 9Dx, 9Ex, 9Fx, 9Gx, 9Hx, 9Nx, 9Ux, 9Vx, 9Wx, 9Yx • 4179–CTO, G2x, G3x, G4x, G5x, G6x, G7x, G8x, G9x, GBx • 4180–CTO, 62x, 64x, K2x, K3x, K4x, K5x, K6x, K7x, K8x, K9x, KAx, KBx, KCx, KDx, KEx, KFx, KGx, KLx, KMx, KNx, L7x, L8x, L9x, LCx, LDx, LEx, LFx, LGx, LHx, LJx, LKx, LLx, LMx, LNx, LPx, LRx, LSx, LTx, LUx, LVx, LWx, LXx, LYx, M2x, M3x, M4x, M5x, M6x, M7x, M9x, MAx, MCx, MGx • 4236–CTO, 62x, 64x, N2x, N3x, N5x, NCx, NDx, NKx, NLx, NMx, NPx, NQx, NRx	93P5695	N
3	LCD module, 14.0-inch HD (1366 x 768) LED backlight Anti-Glare Display • 4177–CTO, 22x, 23x, 24x, 25x, 26x, 27x, 28x, 29x, 2Ax, 2Bx, 2Cx, 2Dx, 2Ex, 2Fx, 2Gx, 2Hx, 2Jx, 2Mx, Q4x, Q5x, Q7x, QCx, QDx, QEx • 4178–CTO, 52x, 53x, 56x, 57x, 5Ax, 5Bx, 5Cx, 5Dx, 5Ex, 5Fx, 5Gx, 5Hx, 5Jx, 5Kx, 5Lx, 5Mx, 92x, 93x, 94x, 95x, 98x, 9Dx, 9Ex, 9Fx, 9Gx, 9Hx, 9Nx, 9Ux, 9Vx, 9Wx, 9Yx • 4179–CTO, G2x, G3x, G4x, G5x, G6x, G7x, G8x, G9x, GBx • 4180–CTO, 62x, 64x, K2x, K3x, K4x, K5x, K6x, K7x, K8x, K9x, KAx, KBx, KCx, KDx, KEx, KFx, KGx, KLx, KMx, KNx, L7x, L8x, L9x, LCx, LDx, LEx, LFx, LGx, LHx, LJx, LKx, LLx, LMx, LNx, LPx, LRx, LSx, LTx, LUx, LVx, LWx, LXx, LYx, M2x, M3x, M4x, M5x, M6x, M7x, M9x, MAx, MCx, MGx • 4236–CTO, 62x, 64x, N2x, N3x, N5x, NCx, NDx, NKx, NLx, NMx, NPx, NQx, NRx	93P5697	N

Table 40. Parts list—14.0-inch HD (1366 x 768) LED Backlight Anti-Glare Display (continued)

No.	FRU (14.0-inch HD (1366 x 768) LED backlight Anti-Glare Display)	FRU no.	CRU ID
4	Hinges • 4177–CTO, 22x, 23x, 24x, 25x, 26x, 27x, 28x, 29x, 2Ax, 2Bx, 2Cx, 2Dx, 2Ex, 2Fx, 2Gx, 2Hx, 2Jx, 2Kx, 2Lx, 2Mx, 2Nx, 2Px, Q2x, Q3x, Q4x, Q5x, Q7x, Q8x, QAx, QBx, QCx, QDx • 4178–CTO, 52x, 53x, 54x, 55x, 56x, 57x, 58x, 59x, 5Ax, 5Bx, 5Cx, 5Dx, 5Ex, 5Fx, 5Gx, 5Hx, 5Jx, 5Kx, 5Lx, 5Mx, 5Nx, 5Px, 5Qx, 5Rx, 5Sx, 5Tx, 5Ux, 5Vx, 5Wx, 5Xx, 5Yx, 5Zx, 92x, 93x, 94x, 95x, 96x, 97x, 98x, 99x, 9Ax, 9Bx, 9Cx, 9Dx, 9Ex, 9Fx, 9Gx, 9Hx, 9Jx, 9Kx, 9Lx, 9Mx, 9Nx, 9Px, 9Qx, 9Rx, 9Sx, 9Tx, 9Ux, 9Vx, 9Wx, 9Xx, 9Yx • 4179–CTO, G2x, G3x, G4x, G5x, G6x, G7x, G8x, G9x, GBx • 4180–CTO, 62x, 63x, 64x, 65x, K2x, K3x, K4x, K5x, K6x, K7x, K8x, K9x, KAx, KBx, KCx, KDx, KEx, KFx, KGx, KHx, KJx, KKx, KLx, KMx, KNx, KPx, KQx, KRx, KSx, KTx, KUx, KVx, KWx, KXx, KYx, KZx, L2x, L3x, L4x, L5x, L6x, L7x, L8x, L9x, LAx, LBx, LCx, LDx, LEx, LFx, LGx, LHx, LJx, LKx, LLx, LMx, LNx, LPx, LQx, LRx, LSx, LTx, LUx, LVx, LWx, LXx, LYx, LZx, M2x, M3x, M4x, M5x, M6x, M7x, M8x, M9x, MAx, MBx, MCx, MDx, MEx, MFx, MGx, MHx, MJx • 4236–CTO, 62x, 63x, 64x, 65x, N2x, N3x, N4x, N5x, N6x, N7x, N8x, N9x, NAx, NBx, NCx, NDx, NEx, NFx, NGx, NHx, NKx, NLx, NMx, NNx, NPx, NQx, NRx, MBx	04W1610	N
4	Hinges • 4177–CTO, 22x, 23x, 24x, 25x, 26x, 27x, 28x, 29x, 2Ax, 2Bx, 2Cx, 2Dx, 2Ex, 2Fx, 2Gx, 2Hx, 2Jx, 2Kx, 2Lx, 2Mx, 2Nx, 2Px, Q2x, Q3x, Q4x, Q5x, Q7x, Q8x, QAx, QBx, QCx, QDx • 4178–CTO, 52x, 53x, 54x, 55x, 56x, 57x, 58x, 59x, 5Ax, 5Bx, 5Cx, 5Dx, 5Ex, 5Fx, 5Gx, 5Hx, 5Jx, 5Kx, 5Lx, 5Mx, 5Nx, 5Px, 5Qx, 5Rx, 5Sx, 5Tx, 5Ux, 5Vx, 5Wx, 5Xx, 5Yx, 5Zx, 92x, 93x, 94x, 95x, 96x, 97x, 98x, 99x, 9Ax, 9Bx, 9Cx, 9Dx, 9Ex, 9Fx, 9Gx, 9Hx, 9Jx, 9Kx, 9Lx, 9Mx, 9Nx, 9Px, 9Qx, 9Rx, 9Sx, 9Tx, 9Ux, 9Vx, 9Wx, 9Xx, 9Yx • 4179–CTO, G2x, G3x, G4x, G5x, G6x, G7x, G8x, G9x, GBx • 4180–CTO, 62x, 63x, 64x, 65x, K2x, K3x, K4x, K5x, K6x, K7x, K8x, K9x, KAx, KBx, KCx, KDx, KEx, KFx, KGx, KHx, KJx, KKx, KLx, KMx, KNx, KPx, KQx, KRx, KSx, KTx, KUx, KVx, KWx, KXx, KYx, KZx, L2x, L3x, L4x, L5x, L6x, L7x, L8x, L9x, LAx, LBx, LCx, LDx, LEx, LFx, LGx, LHx, LJx, LKx, LLx, LMx, LNx, LPx, LQx, LRx, LSx, LTx, LUx, LVx, LWx, LXx, LYx, LZx, M2x, M3x, M4x, M5x, M6x, M7x, M8x, M9x, MAx, MBx, MCx, MDx, MEx, MFx, MGx, MHx, MJx • 4236–CTO, 62x, 63x, 64x, 65x, N2x, N3x, N4x, N5x, N6x, N7x, N8x, N9x, NAx, NBx, NCx, NDx, NEx, NFx, NGx, NHx, NKx, NLx, NMx, NNx, NPx, NQx, NRx, MBx	04W1612	N
4	Hinges • 4177–CTO, 22x, 23x, 24x, 25x, 26x, 27x, 28x, 29x, 2Ax, 2Bx, 2Cx, 2Dx, 2Ex, 2Fx, 2Gx, 2Hx, 2Jx, 2Kx, 2Lx, 2Mx, 2Nx, 2Px, Q2x, Q3x, Q4x, Q5x, Q7x, Q8x, QAx, QBx, QCx, QDx • 4178–CTO, 52x, 53x, 54x, 55x, 56x, 57x, 58x, 59x, 5Ax, 5Bx, 5Cx, 5Dx, 5Ex, 5Fx, 5Gx, 5Hx, 5Jx, 5Kx, 5Lx, 5Mx, 5Nx, 5Px, 5Qx, 5Rx, 5Sx, 5Tx, 5Ux, 5Vx, 5Wx, 5Xx, 5Yx, 5Zx, 92x, 93x, 94x, 95x, 96x, 97x, 98x, 99x, 9Ax, 9Bx, 9Cx, 9Dx, 9Ex, 9Fx, 9Gx, 9Hx, 9Jx, 9Kx, 9Lx, 9Mx, 9Nx, 9Px, 9Qx, 9Rx, 9Sx, 9Tx, 9Ux, 9Vx, 9Wx, 9Xx, 9Yx • 4179–CTO, G2x, G3x, G4x, G5x, G6x, G7x, G8x, G9x, GBx • 4180–CTO, 62x, 63x, 64x, 65x, K2x, K3x, K4x, K5x, K6x, K7x, K8x, K9x, KAx, KBx, KCx, KDx, KEx, KFx, KGx, KHx, KJx, KKx, KLx, KMx, KNx, KPx, KQx, KRx, KSx, KTx, KUx, KVx, KWx, KXx, KYx, KZx, L2x, L3x, L4x, L5x, L6x, L7x, L8x, L9x, LAx, LBx, LCx, LDx, LEx, LFx, LGx, LHx, LJx, LKx, LLx, LMx, LNx, LPx, LQx, LRx, LSx, LTx, LUx, LVx, LWx, LXx, LYx, LZx, M2x, M3x, M4x, M5x, M6x, M7x, M8x, M9x, MAx, MBx, MCx, MDx, MEx, MFx, MGx, MHx, MJx • 4236–CTO, 62x, 63x, 64x, 65x, N2x, N3x, N4x, N5x, N6x, N7x, N8x, N9x, NAx, NBx, NCx, NDx, NEx, NFx, NGx, NHx, NKx, NLx, NMx, NNx, NPx, NQx, NRx, MBx	04W1611	N

Table 40. Parts list—14.0-inch HD (1366 x 768) LED Backlight Anti-Glare Display (continued)

No.	FRU (14.0-inch HD (1366 x 768) LED backlight Anti-Glare Display)	FRU no.	CRU ID
5	Wireless antenna (wireless LAN/wirless WAN) • 4177–CTO, 22x, 23x, 24x, 25x, 26x, 27x, 28x, 29x, 2Ax, 2Bx, 2Cx, 2Dx, 2Ex, 2Fx, 2Gx, 2Hx, 2Jx, 2Kx, 2Lx, 2Mx, 2Nx, 2Px, Q2x, Q3x, Q4x, Q5x, Q7x, Q8x, QAx, QBx, QCx, QDx • 4178–CTO, 52x, 53x, 54x, 55x, 56x, 57x, 58x, 59x, 5Ax, 5Bx, 5Cx, 5Dx, 5Ex, 5Fx, 5Gx, 5Hx, 5Jx, 5Kx, 5Lx, 5Mx, 5Nx, 5Px, 5Qx, 5Rx, 5Sx, 5Tx, 5Ux, 5Vx, 5Wx, 5Xx, 5Yx, 5Zx, 92x, 93x, 94x, 95x, 96x, 97x, 98x, 99x, 9Ax, 9Bx, 9Cx, 9Dx, 9Ex, 9Fx, 9Gx, 9Hx, 9Jx, 9Kx, 9Lx, 9Mx, 9Nx, 9Px, 9Qx, 9Rx, 9Sx, 9Tx, 9Ux, 9Vx, 9Wx, 9Xx, 9Yx • 4179–CTO, G2x, G3x, G4x, G5x, G6x, G7x, G8x, G9x, GBx • 4180–CTO, 62x, 63x, 64x, 65x, K2x, K3x, K4x, K5x, K6x, K7x, K8x, K9x, KAx, KBx, KCx, KDx, KEx, KFx, KGx, KHx, KJx, KKx, KLx, KMx, KNx, KPx, KQx, KRx, KSx, KTx, KUx, KVx, KWx, KXx, KYx, KZx, L2x, L3x, L4x, L5x, L6x, L7x, L8x, L9x, LAx, LBx, LCx, LDx, LEx, LFx, LGx, LHx, LJx, LKx, LLx, LMx, LNx, LPx, LQx, LRx, LSx, LTx, LUx, LVx, LWx, LXx, LYx, LZx, M2x, M3x, M4x, M5x, M6x, M7x, M8x, M9x, MAx, MBx, MCx, MDx, MEx, MFx, MGx, MHx, MJx • 4236–CTO, 62x, 63x, 64x, 65x, N2x, N3x, N4x, N5x, N6x, N7x, N8x, N9x, NAx, NBx, NCx, NDx, NEx, NFx, NGx, NHx, NKx, NLx, NMx, NNx, NPx, NQx, NRx, MBx	04W1615	N
5	Wireless antenna (wireless LAN/wirless WAN) • 4177–CTO, 22x, 23x, 24x, 25x, 26x, 27x, 28x, 29x, 2Ax, 2Bx, 2Cx, 2Dx, 2Ex, 2Fx, 2Gx, 2Hx, 2Jx, 2Kx, 2Lx, 2Mx, 2Nx, 2Px, Q2x, Q3x, Q4x, Q5x, Q7x, Q8x, QAx, QBx, QCx, QDx • 4178–CTO, 52x, 53x, 54x, 55x, 56x, 57x, 58x, 59x, 5Ax, 5Bx, 5Cx, 5Dx, 5Ex, 5Fx, 5Gx, 5Hx, 5Jx, 5Kx, 5Lx, 5Mx, 5Nx, 5Px, 5Qx, 5Rx, 5Sx, 5Tx, 5Ux, 5Vx, 5Wx, 5Xx, 5Yx, 5Zx, 92x, 93x, 94x, 95x, 96x, 97x, 98x, 99x, 9Ax, 9Bx, 9Cx, 9Dx, 9Ex, 9Fx, 9Gx, 9Hx, 9Jx, 9Kx, 9Lx, 9Mx, 9Nx, 9Px, 9Qx, 9Rx, 9Sx, 9Tx, 9Ux, 9Vx, 9Wx, 9Xx, 9Yx • 4179–CTO, G2x, G3x, G4x, G5x, G6x, G7x, G8x, G9x, GBx • 4180–CTO, 62x, 63x, 64x, 65x, K2x, K3x, K4x, K5x, K6x, K7x, K8x, K9x, KAx, KBx, KCx, KDx, KEx, KFx, KGx, KHx, KJx, KKx, KLx, KMx, KNx, KPx, KQx, KRx, KSx, KTx, KUx, KVx, KWx, KXx, KYx, KZx, L2x, L3x, L4x, L5x, L6x, L7x, L8x, L9x, LAx, LBx, LCx, LDx, LEx, LFx, LGx, LHx, LJx, LKx, LLx, LMx, LNx, LPx, LQx, LRx, LSx, LTx, LUx, LVx, LWx, LXx, LYx, LZx, M2x, M3x, M4x, M5x, M6x, M7x, M8x, M9x, MAx, MBx, MCx, MDx, MEx, MFx, MGx, MHx, MJx • 4236–CTO, 62x, 63x, 64x, 65x, N2x, N3x, N4x, N5x, N6x, N7x, N8x, N9x, NAx, NBx, NCx, NDx, NEx, NFx, NGx, NHx, NKx, NLx, NMx, NNx, NPx, NQx, NRx, MBx	04W1616	N
6	LCD rear cover assembly • 4177–CTO, 22x, 23x, 24x, 25x, 26x, 27x, 28x, 29x, 2Ax, 2Bx, 2Cx, 2Dx, 2Ex, 2Fx, 2Gx, 2Hx, 2Jx, 2Kx, 2Lx, 2Mx, 2Nx, 2Px, Q2x, Q3x, Q4x, Q5x, Q7x, Q8x, QAx, QBx, QCx, QDx • 4178–CTO, 52x, 53x, 54x, 55x, 56x, 57x, 58x, 59x, 5Ax, 5Bx, 5Cx, 5Dx, 5Ex, 5Fx, 5Gx, 5Hx, 5Jx, 5Kx, 5Lx, 5Mx, 5Nx, 5Px, 5Qx, 5Rx, 5Sx, 5Tx, 5Ux, 5Vx, 5Wx, 5Xx, 5Yx, 5Zx, 92x, 93x, 94x, 95x, 96x, 97x, 98x, 99x, 9Ax, 9Bx, 9Cx, 9Dx, 9Ex, 9Fx, 9Gx, 9Hx, 9Jx, 9Kx, 9Lx, 9Mx, 9Nx, 9Px, 9Qx, 9Rx, 9Sx, 9Tx, 9Ux, 9Vx, 9Wx, 9Xx, 9Yx • 4179–CTO, G2x, G3x, G4x, G5x, G6x, G7x, G8x, G9x, GBx • 4180–CTO, 62x, 63x, 64x, 65x, K2x, K3x, K4x, K5x, K6x, K7x, K8x, K9x, KAx, KBx, KCx, KDx, KEx, KFx, KGx, KHx, KJx, KKx, KLx, KMx, KNx, KPx, KQx, KRx, KSx, KTx, KUx, KVx, KWx, KXx, KYx, KZx, L2x, L3x, L4x, L5x, L6x, L7x, L8x, L9x, LAx, LBx, LCx, LDx, LEx, LFx, LGx, LHx, LJx, LKx, LLx, LMx, LNx, LPx, LQx, LRx, LSx, LTx, LUx, LVx, LWx, LXx, LYx, LZx, M2x, M3x, M4x, M5x, M6x, M7x, M8x, M9x, MAx, MBx, MCx, MDx, MEx, MFx, MGx, MHx, MJx • 4236–CTO, 62x, 63x, 64x, 65x, N2x, N3x, N4x, N5x, N6x, N7x, N8x, N9x, NAx, NBx, NCx, NDx, NEx, NFx, NGx, NHx, NKx, NLx, NMx, NNx, NPx, NQx, NRx, MBx	04W1608	N

Table 40. Parts list—14.0-inch HD (1366 x 768) LED Backlight Anti-Glare Display (continued)

No.	FRU (14.0-inch HD (1366 x 768) LED backlight Anti-Glare Display)	FRU no.	CRU ID
7	LED cable • 4177–CTO, 22x, 23x, 24x, 25x, 26x, 27x, 28x, 29x, 2Ax, 2Bx, 2Cx, 2Dx, 2Ex, 2Fx, 2Gx, 2Hx, 2Jx, 2Kx, 2Lx, 2Mx, 2Nx, 2Px, Q2x, Q3x, Q4x, Q5x, Q7x, Q8x, QAx, QBx, QCx, QDx • 4178–CTO, 52x, 53x, 54x, 55x, 56x, 57x, 58x, 59x, 5Ax, 5Bx, 5Cx, 5Dx, 5Ex, 5Fx, 5Gx, 5Hx, 5Jx, 5Kx, 5Lx, 5Mx, 5Nx, 5Px, 5Qx, 5Rx, 5Sx, 5Tx, 5Ux, 5Vx, 5Wx, 5Xx, 5Yx, 5Zx, 92x, 93x, 94x, 95x, 96x, 97x, 98x, 99x, 9Ax, 9Bx, 9Cx, 9Dx, 9Ex, 9Fx, 9Gx, 9Hx, 9Jx, 9Kx, 9Lx, 9Mx, 9Nx, 9Px, 9Qx, 9Rx, 9Sx, 9Tx, 9Ux, 9Vx, 9Wx, 9Xx, 9Yx • 4179–CTO, G2x, G3x, G4x, G5x, G6x, G7x, G8x, G9x, GBx • 4180–CTO, 62x, 63x, 64x, 65x, K2x, K3x, K4x, K5x, K6x, K7x, K8x, K9x, KAx, KBx, KCx, KDx, KEx, KFx, KGx, KHx, KJx, KKx, KLx, KMx, KNx, KPx, KQx, KRx, KSx, KTx, KUx, KVx, KWx, KXx, KYx, KZx, L2x, L3x, L4x, L5x, L6x, L7x, L8x, L9x, LAx, LBx, LCx, LDx, LEx, LFx, LGx, LHx, LJx, LKx, LLx, LMx, LNx, LPx, LQx, LRx, LSx, LTx, LUx, LVx, LWx, LXx, LYx, LZx, M2x, M3x, M4x, M5x, M6x, M7x, M8x, M9x, MAx, MBx, MCx, MDx, MEx, MFx, MGx, MHx, MJx • 4236–CTO, 62x, 63x, 64x, 65x, N2x, N3x, N4x, N5x, N6x, N7x, N8x, N9x, NAx, NBx, NCx, NDx, NEx, NFx, NGx, NHx, NKx, NLx, NMx, NNx, NPx, NQx, NRx, MBx	04W1619	N
8	LCD cable • 4177–CTO, 22x, 23x, 24x, 25x, 26x, 27x, 28x, 29x, 2Ax, 2Bx, 2Cx, 2Dx, 2Ex, 2Fx, 2Gx, 2Hx, 2Jx, 2Mx, Q4x, Q5x, Q7x, QCx, QDx • 4178–CTO, 52x, 53x, 56x, 57x, 5Ax, 5Bx, 5Cx, 5Dx, 5Ex, 5Fx, 5Gx, 5Hx, 5Jx, 5Kx, 5Lx, 5Mx, 92x, 93x, 94x, 95x, 98x, 9Dx, 9Ex, 9Fx, 9Gx, 9Hx, 9Nx, 9Ux, 9Vx, 9Wx, 9Yx • 4179–CTO, G2x, G3x, G4x, G5x, G6x, G7x, G8x, G9x, GBx • 4180–CTO, 62x, 64x, K2x, K3x, K4x, K5x, K6x, K7x, K8x, K9x, KAx, KBx, KCx, KDx, KEx, KFx, KGx, KLx, KMx, KNx, L7x, L8x, L9x, LCx, LDx, LEx, LFx, LGx, LHx, LJx, LKx, LLx, LMx, LNx, LPx, LRx, LSx, LTx, LUx, LVx, LWx, LXx, LYx, M2x, M3x, M4x, M5x, M6x, M7x, M9x, MAx, MCx, MGx • 4236–CTO, 62x, 64x, N2x, N3x, N5x, NCx, NDx, NKx, NLx, NMx, NPx, NQx, NRx	04W1617	N
9	LED sub card • 4177–CTO, 22x, 23x, 24x, 25x, 26x, 27x, 28x, 29x, 2Ax, 2Bx, 2Cx, 2Dx, 2Ex, 2Fx, 2Gx, 2Hx, 2Jx, 2Kx, 2Lx, 2Mx, 2Nx, 2Px, Q2x, Q3x, Q4x, Q5x, Q7x, Q8x, QAx, QBx, QCx, QDx • 4178–CTO, 52x, 53x, 54x, 55x, 56x, 57x, 58x, 59x, 5Ax, 5Bx, 5Cx, 5Dx, 5Ex, 5Fx, 5Gx, 5Hx, 5Jx, 5Kx, 5Lx, 5Mx, 5Nx, 5Px, 5Qx, 5Rx, 5Sx, 5Tx, 5Ux, 5Vx, 5Wx, 5Xx, 5Yx, 5Zx, 92x, 93x, 94x, 95x, 96x, 97x, 98x, 99x, 9Ax, 9Bx, 9Cx, 9Dx, 9Ex, 9Fx, 9Gx, 9Hx, 9Jx, 9Kx, 9Lx, 9Mx, 9Nx, 9Px, 9Qx, 9Rx, 9Sx, 9Tx, 9Ux, 9Vx, 9Wx, 9Xx, 9Yx • 4179–CTO, G2x, G3x, G4x, G5x, G6x, G7x, G8x, G9x, GBx • 4180–CTO, 62x, 63x, 64x, 65x, K2x, K3x, K4x, K5x, K6x, K7x, K8x, K9x, KAx, KBx, KCx, KDx, KEx, KFx, KGx, KHx, KJx, KKx, KLx, KMx, KNx, KPx, KQx, KRx, KSx, KTx, KUx, KVx, KWx, KXx, KYx, KZx, L2x, L3x, L4x, L5x, L6x, L7x, L8x, L9x, LAx, LBx, LCx, LDx, LEx, LFx, LGx, LHx, LJx, LKx, LLx, LMx, LNx, LPx, LQx, LRx, LSx, LTx, LUx, LVx, LWx, LXx, LYx, LZx, M2x, M3x, M4x, M5x, M6x, M7x, M8x, M9x, MAx, MBx, MCx, MDx, MEx, MFx, MGx, MHx, MJx • 4236–CTO, 62x, 63x, 64x, 65x, N2x, N3x, N4x, N5x, N6x, N7x, N8x, N9x, NAx, NBx, NCx, NDx, NEx, NFx, NGx, NHx, NKx, NLx, NMx, NNx, NPx, NQx, NRx, MBx	04W1370	N

Table 40. Parts list—14.0-inch HD (1366 x 768) LED Backlight Anti-Glare Display (continued)

No.	FRU (14.0-inch HD (1366 x 768) LED backlight Anti-Glare Display)	FRU no.	CRU ID
10	Clear plate kit • 4177–CTO, 22x, 23x, 24x, 25x, 26x, 27x, 28x, 29x, 2Ax, 2Bx, 2Cx, 2Dx, 2Ex, 2Fx, 2Gx, 2Hx, 2Jx, 2Kx, 2Lx, 2Mx, 2Nx, 2Px, Q2x, Q3x, Q4x, Q5x, Q7x, Q8x, QAx, QBx, QCx, QDx • 4178–CTO, 52x, 53x, 54x, 55x, 56x, 57x, 58x, 59x, 5Ax, 5Bx, 5Cx, 5Dx, 5Ex, 5Fx, 5Gx, 5Hx, 5Jx, 5Kx, 5Lx, 5Mx, 5Nx, 5Px, 5Qx, 5Rx, 5Sx, 5Tx, 5Ux, 5Vx, 5Wx, 5Xx, 5Yx, 5Zx, 92x, 93x, 94x, 95x, 96x, 97x, 98x, 99x, 9Ax, 9Bx, 9Cx, 9Dx, 9Ex, 9Fx, 9Gx, 9Hx, 9Jx, 9Kx, 9Lx, 9Mx, 9Nx, 9Px, 9Qx, 9Rx, 9Sx, 9Tx, 9Ux, 9Vx, 9Wx, 9Xx, 9Yx • 4179–CTO, G2x, G3x, G4x, G5x, G6x, G7x, G8x, G9x, GBx • 4180–CTO, 62x, 63x, 64x, 65x, K2x, K3x, K4x, K5x, K6x, K7x, K8x, K9x, KAx, KBx, KCx, KDx, KEx, KFx, KGx, KHx, KJx, KKx, KLx, KMx, KNx, KPx, KQx, KRx, KSx, KTx, KUx, KVx, KWx, KXx, KYx, KZx, L2x, L3x, L4x, L5x, L6x, L7x, L8x, L9x, LAx, LBx, LCx, LDx, LEx, LFx, LGx, LHx, LJx, LKx, LLx, LMx, LNx, LPx, LQx, LRx, LSx, LTx, LUx, LVx, LWx, LXx, LYx, LZx, M2x, M3x, M4x, M5x, M6x, M7x, M8x, M9x, MAx, MBx, MCx, MDx, MEx, MFx, MGx, MHx, MJx • 4236–CTO, 62x, 63x, 64x, 65x, N2x, N3x, N4x, N5x, N6x, N7x, N8x, N9x, NAx, NBx, NCx, NDx, NEx, NFx, NGx, NHx, NKx, NLx, NMx, NNx, NPx, NQx, NRx, MBx	04W1620	N

Table 41. Parts list—14.0-inch HD+ (1600 x 900) LED backlight Anti-Glare Display

No.	FRU (14.0-inch HD+ (1600 x 900) LED backlight Anti-Glare Display)	FRU no.	CRU ID
a, b	See “Miscellaneous parts” on page 167.		
1	LCD bezel assembly • 4177–CTO, 22x, 23x, 24x, 25x, 26x, 27x, 28x, 29x, 2Ax, 2Bx, 2Cx, 2Dx, 2Ex, 2Fx, 2Gx, 2Hx, 2Jx, 2Kx, 2Lx, 2Mx, 2Nx, 2Px, Q2x, Q3x, Q4x, Q5x, Q7x, Q8x, QAx, QBx, QCx, QDx • 4178–CTO, 52x, 53x, 54x, 55x, 56x, 57x, 58x, 59x, 5Ax, 5Bx, 5Cx, 5Dx, 5Ex, 5Fx, 5Gx, 5Hx, 5Jx, 5Kx, 5Lx, 5Mx, 5Nx, 5Px, 5Qx, 5Rx, 5Sx, 5Tx, 5Ux, 5Vx, 5Wx, 5Xx, 5Yx, 5Zx, 92x, 93x, 94x, 95x, 96x, 97x, 98x, 99x, 9Ax, 9Bx, 9Cx, 9Dx, 9Ex, 9Fx, 9Gx, 9Hx, 9Jx, 9Kx, 9Lx, 9Mx, 9Nx, 9Px, 9Qx, 9Rx, 9Sx, 9Tx, 9Ux, 9Vx, 9Wx, 9Xx, 9Yx • 4179–CTO, G2x, G3x, G4x, G5x, G6x, G7x, G8x, G9x, GBx • 4180–CTO, 62x, 63x, 64x, 65x, K2x, K3x, K4x, K5x, K6x, K7x, K8x, K9x, KAx, KBx, KCx, KDx, KEx, KFx, KGx, KHx, KJx, KKx, KLx, KMx, KNx, KPx, KQx, KRx, KSx, KTx, KUx, KVx, KWx, KXx, KYx, KZx, L2x, L3x, L4x, L5x, L6x, L7x, L8x, L9x, LAx, LBx, LCx, LDx, LEx, LFx, LGx, LHx, LJx, LKx, LLx, LMx, LNx, LPx, LQx, LRx, LSx, LTx, LUx, LVx, LWx, LXx, LYx, LZx, M2x, M3x, M4x, M5x, M6x, M7x, M8x, M9x, MAx, MBx, MCx, MDx, MEx, MFx, MGx, MHx, MJx • 4236–CTO, 62x, 63x, 64x, 65x, N2x, N3x, N4x, N5x, N6x, N7x, N8x, N9x, NAx, NBx, NCx, NDx, NEx, NFx, NGx, NHx, NKx, NLx, NMx, NNx, NPx, NQx, NRx, MBx	04W1609	N
2	Camera module • 4177–CTO, 22x, 23x, 24x, 25x, 26x, 27x, 28x, 29x, 2Ax, 2Bx, 2Cx, 2Dx, 2Ex, 2Fx, 2Gx, 2Hx, 2Jx, 2Kx, 2Lx, 2Mx, 2Nx, 2Px, Q2x, Q3x, Q4x, Q5x, Q8x, QAx, QBx, QDx, QEx • 4178–CTO, 52x, 53x, 54x, 55x, 56x, 57x, 58x, 59x, 5Ax, 5Bx, 5Cx, 5Dx, 5Ex, 5Fx, 5Gx, 5Hx, 5Jx, 5Kx, 5Lx, 5Mx, 5Nx, 5Px, 5Qx, 5Rx, 5Sx, 5Tx, 5Ux, 5Vx, 5Wx, 5Xx, 5Yx, 5Zx, 92x, 93x, 94x, 95x, 96x, 97x, 98x, 99x, 9Ax, 9Bx, 9Cx, 9Dx, 9Ex, 9Fx, 9Gx, 9Hx, 9Jx, 9Kx, 9Lx, 9Mx, 9Nx, 9Px, 9Qx, 9Rx, 9Sx, 9Tx, 9Ux, 9Vx, 9Wx, 9Xx, 9Yx • 4179–CTO, G3x, G4x, G5x, G6x, G7x, G8x, G9x, GBx • 4180–CTO, 62x, 63x, 64x, 65x, K7x, K8x, K9x, KAx, KBx, KCx, KDx, KEx, KFx, KGx, KHx, KJx, KKx, KLx, KMx, KNx, KQx, KRx, KSx, KTx, KUx, KVx, KWx, KXx, KYx, KZx, L2x, L3x, L4x, L5x, L6x, L7x, L8x, L9x, LAx, LBx, LCx, LDx, LFx, LGx, LHx, LLx, LMx, LNx, LPx, LQx, LRx, LSx, LTx, LVx, LWx, LXx, LYx, LZx, M2x, M3x, M4x, M5x, M6x, M7x, M8x, M9x, MAx, MBx, MCx, MDx, MEx, MGx, MHx, MJx • 4236–CTO, 62x, 63x, 64x, 65x, N2x, N4x, N5x, N7x, N8x, N9x, NAx, NBx, NCx, NDx, NEx, NFx, NGx, NHx, NKx, NLx, NPx, NQx, NRx, MBx	60Y9994	N

Table 41. Parts list—14.0-inch HD+ (1600 x 900) LED backlight Anti-Glare Display (continued)

No.	FRU (14.0-inch HD+ (1600 x 900) LED backlight Anti-Glare Display)	FRU no.	CRU ID
2	Camera module (No camera and with microphone) • 4177–CTO, Q7x, QCx • 4178–CTO • 4179–CTO, G2x • 4180–CTO, K2x, K3x, K4x, K5x, K6x, KPx, LEx, LJx, LKx, LUx, MFx • 4236–CTO, N3x, N6x, NMx, NNx	04W1613	N
2	Camera module (No camera and no integrated microphone) • 4177–CTO • 4178–CTO • 4179–CTO • 4180–CTO • 4236–CTO	04W1614	N
3	LCD module, 14.0-inch HD+ (1600 x 900) LED backlight Anti-Glare Display • 4177–CTO, 2Kx, 2Lx, 2Nx, 2Px, Q2x, Q3x, Q8x, QAx, QBx, QFx • 4178–CTO, 54x, 55x, 58x, 59x, 5Nx, 5Px, 5Qx, 5Rx, 5Sx, 5Tx, 5Ux, 5Vx, 5Wx, 5Xx, 5Yx, 5Zx, 96x, 97x, 99x, 9Ax, 9Bx, 9Cx, 9Jx, 9Kx, 9Lx, 9Mx, 9Px, 9Qx, 9Rx, 9Sx, 9Tx, 9Xx • 4179–CTO • 4180–CTO, 63x, 65x, KHx, KJx, KKx, KPx, KQx, KRx, KSx, KTx, KUx, KVx, KWx, KXx, KYx, KZx, L2x, L3x, L4x, L5x, L6x, LAx, LBx, LQx, LZx, M8x, MBx, MDx, MEx, MFx, MHx, MJx • 4236–CTO, 63x, 65x, N4x, N6x, N7x, N8x, N9x, NAx, NBx, NEx, NFx, NGx, NHx, NNx, MBx	93P5693	N
3	LCD module, 14.0-inch HD+ (1600 x 900) LED backlight Anti-Glare Display • 4177–CTO, 2Kx, 2Lx, 2Nx, 2Px, Q2x, Q3x, Q8x, QAx, QBx, QFx • 4178–CTO, 54x, 55x, 58x, 59x, 5Nx, 5Px, 5Qx, 5Rx, 5Sx, 5Tx, 5Ux, 5Vx, 5Wx, 5Xx, 5Yx, 5Zx, 96x, 97x, 99x, 9Ax, 9Bx, 9Cx, 9Jx, 9Kx, 9Lx, 9Mx, 9Px, 9Qx, 9Rx, 9Sx, 9Tx, 9Xx • 4179–CTO • 4180–CTO, 63x, 65x, KHx, KJx, KKx, KPx, KQx, KRx, KSx, KTx, KUx, KVx, KWx, KXx, KYx, KZx, L2x, L3x, L4x, L5x, L6x, LAx, LBx, LQx, LZx, M8x, MBx, MDx, MEx, MFx, MHx, MJx • 4236–CTO, 63x, 65x, N4x, N6x, N7x, N8x, N9x, NAx, NBx, NEx, NFx, NGx, NHx, NNx, MBx	93P5689	N
4	Hinges • 4177–CTO, 22x, 23x, 24x, 25x, 26x, 27x, 28x, 29x, 2Ax, 2Bx, 2Cx, 2Dx, 2Ex, 2Fx, 2Gx, 2Hx, 2Jx, 2Kx, 2Lx, 2Mx, 2Nx, 2Px, Q2x, Q3x, Q4x, Q5x, Q7x, Q8x, QAx, QBx, QCx, QDx • 4178–CTO, 52x, 53x, 54x, 55x, 56x, 57x, 58x, 59x, 5Ax, 5Bx, 5Cx, 5Dx, 5Ex, 5Fx, 5Gx, 5Hx, 5Jx, 5Kx, 5Lx, 5Mx, 5Nx, 5Px, 5Qx, 5Rx, 5Sx, 5Tx, 5Ux, 5Vx, 5Wx, 5Xx, 5Yx, 5Zx, 92x, 93x, 94x, 95x, 96x, 97x, 98x, 99x, 9Ax, 9Bx, 9Cx, 9Dx, 9Ex, 9Fx, 9Gx, 9Hx, 9Jx, 9Kx, 9Lx, 9Mx, 9Nx, 9Px, 9Qx, 9Rx, 9Sx, 9Tx, 9Ux, 9Vx, 9Wx, 9Xx, 9Yx • 4179–CTO, G2x, G3x, G4x, G5x, G6x, G7x, G8x, G9x, GBx • 4180–CTO, 62x, 63x, 64x, 65x, K2x, K3x, K4x, K5x, K6x, K7x, K8x, K9x, KAx, KBx, KCx, KDx, KEx, KFx, KGx, KHx, KJx, KKx, KLx, KMx, KNx, KPx, KQx, KRx, KSx, KTx, KUx, KVx, KWx, KXx, KYx, KZx, L2x, L3x, L4x, L5x, L6x, L7x, L8x, L9x, LAx, LBx, LCx, LDx, LEx, LFx, LGx, LHx, LJx, LKx, LLx, LMx, LNx, LPx, LQx, LRx, LSx, LTx, LUx, LVx, LWx, LXx, LYx, LZx, M2x, M3x, M4x, M5x, M6x, M7x, M8x, M9x, MAx, MBx, MCx, MDx, MEx, MFx, MGx, MHx, MJx • 4236–CTO, 62x, 63x, 64x, 65x, N2x, N3x, N4x, N5x, N6x, N7x, N8x, N9x, NAx, NBx, NCx, NDx, NEx, NFx, NGx, NHx, NKx, NLx, NMx, NNx, NPx, NQx, NRx, MBx	04W1610	N

Table 41. Parts list—14.0-inch HD+ (1600 x 900) LED backlight Anti-Glare Display (continued)

No.	FRU (14.0-inch HD+ (1600 x 900) LED backlight Anti-Glare Display)	FRU no.	CRU ID
4	Hinges • 4177–CTO, 22x, 23x, 24x, 25x, 26x, 27x, 28x, 29x, 2Ax, 2Bx, 2Cx, 2Dx, 2Ex, 2Fx, 2Gx, 2Hx, 2Jx, 2Kx, 2Lx, 2Mx, 2Nx, 2Px, Q2x, Q3x, Q4x, Q5x, Q7x, Q8x, QAx, QBx, QCx, QDx • 4178–CTO, 52x, 53x, 54x, 55x, 56x, 57x, 58x, 59x, 5Ax, 5Bx, 5Cx, 5Dx, 5Ex, 5Fx, 5Gx, 5Hx, 5Jx, 5Kx, 5Lx, 5Mx, 5Nx, 5Px, 5Qx, 5Rx, 5Sx, 5Tx, 5Ux, 5Vx, 5Wx, 5Xx, 5Yx, 5Zx, 92x, 93x, 94x, 95x, 96x, 97x, 98x, 99x, 9Ax, 9Bx, 9Cx, 9Dx, 9Ex, 9Fx, 9Gx, 9Hx, 9Jx, 9Kx, 9Lx, 9Mx, 9Nx, 9Px, 9Qx, 9Rx, 9Sx, 9Tx, 9Ux, 9Vx, 9Wx, 9Xx, 9Yx • 4179–CTO, G2x, G3x, G4x, G5x, G6x, G7x, G8x, G9x, GBx • 4180–CTO, 62x, 63x, 64x, 65x, K2x, K3x, K4x, K5x, K6x, K7x, K8x, K9x, KAx, KBx, KCx, KDx, KEx, KFx, KGx, KHx, KJx, KKx, KLx, KMx, KNx, KPx, KQx, KRx, KSx, KTx, KUx, KVx, KWx, KXx, KYx, KZx, L2x, L3x, L4x, L5x, L6x, L7x, L8x, L9x, LAx, LBx, LCx, LDx, LEx, LFx, LGx, LHx, LJx, LKx, LLx, LMx, LNx, LPx, LQx, LRx, LSx, LTx, LUx, LVx, LWx, LXx, LYx, LZx, M2x, M3x, M4x, M5x, M6x, M7x, M8x, M9x, MAx, MBx, MCx, MDx, MEx, MFx, MGx, MHx, MJx • 4236–CTO, 62x, 63x, 64x, 65x, N2x, N3x, N4x, N5x, N6x, N7x, N8x, N9x, NAx, NBx, NCx, NDx, NEx, NFx, NGx, NHx, NKx, NLx, NMx, NNx, NPx, NQx, NRx, MBx	04W1612	N
4	Hinges • 4177–CTO, 22x, 23x, 24x, 25x, 26x, 27x, 28x, 29x, 2Ax, 2Bx, 2Cx, 2Dx, 2Ex, 2Fx, 2Gx, 2Hx, 2Jx, 2Kx, 2Lx, 2Mx, 2Nx, 2Px, Q2x, Q3x, Q4x, Q5x, Q7x, Q8x, QAx, QBx, QCx, QDx • 4178–CTO, 52x, 53x, 54x, 55x, 56x, 57x, 58x, 59x, 5Ax, 5Bx, 5Cx, 5Dx, 5Ex, 5Fx, 5Gx, 5Hx, 5Jx, 5Kx, 5Lx, 5Mx, 5Nx, 5Px, 5Qx, 5Rx, 5Sx, 5Tx, 5Ux, 5Vx, 5Wx, 5Xx, 5Yx, 5Zx, 92x, 93x, 94x, 95x, 96x, 97x, 98x, 99x, 9Ax, 9Bx, 9Cx, 9Dx, 9Ex, 9Fx, 9Gx, 9Hx, 9Jx, 9Kx, 9Lx, 9Mx, 9Nx, 9Px, 9Qx, 9Rx, 9Sx, 9Tx, 9Ux, 9Vx, 9Wx, 9Xx, 9Yx • 4179–CTO, G2x, G3x, G4x, G5x, G6x, G7x, G8x, G9x, GBx • 4180–CTO, 62x, 63x, 64x, 65x, K2x, K3x, K4x, K5x, K6x, K7x, K8x, K9x, KAx, KBx, KCx, KDx, KEx, KFx, KGx, KHx, KJx, KKx, KLx, KMx, KNx, KPx, KQx, KRx, KSx, KTx, KUx, KVx, KWx, KXx, KYx, KZx, L2x, L3x, L4x, L5x, L6x, L7x, L8x, L9x, LAx, LBx, LCx, LDx, LEx, LFx, LGx, LHx, LJx, LKx, LLx, LMx, LNx, LPx, LQx, LRx, LSx, LTx, LUx, LVx, LWx, LXx, LYx, LZx, M2x, M3x, M4x, M5x, M6x, M7x, M8x, M9x, MAx, MBx, MCx, MDx, MEx, MFx, MGx, MHx, MJx • 4236–CTO, 62x, 63x, 64x, 65x, N2x, N3x, N4x, N5x, N6x, N7x, N8x, N9x, NAx, NBx, NCx, NDx, NEx, NFx, NGx, NHx, NKx, NLx, NMx, NNx, NPx, NQx, NRx, MBx	04W1611	N
5	Wireless antenna (wireless LAN/wirless WAN) • 4177–CTO, 22x, 23x, 24x, 25x, 26x, 27x, 28x, 29x, 2Ax, 2Bx, 2Cx, 2Dx, 2Ex, 2Fx, 2Gx, 2Hx, 2Jx, 2Kx, 2Lx, 2Mx, 2Nx, 2Px, Q2x, Q3x, Q4x, Q5x, Q7x, Q8x, QAx, QBx, QCx, QDx • 4178–CTO, 52x, 53x, 54x, 55x, 56x, 57x, 58x, 59x, 5Ax, 5Bx, 5Cx, 5Dx, 5Ex, 5Fx, 5Gx, 5Hx, 5Jx, 5Kx, 5Lx, 5Mx, 5Nx, 5Px, 5Qx, 5Rx, 5Sx, 5Tx, 5Ux, 5Vx, 5Wx, 5Xx, 5Yx, 5Zx, 92x, 93x, 94x, 95x, 96x, 97x, 98x, 99x, 9Ax, 9Bx, 9Cx, 9Dx, 9Ex, 9Fx, 9Gx, 9Hx, 9Jx, 9Kx, 9Lx, 9Mx, 9Nx, 9Px, 9Qx, 9Rx, 9Sx, 9Tx, 9Ux, 9Vx, 9Wx, 9Xx, 9Yx • 4179–CTO, G2x, G3x, G4x, G5x, G6x, G7x, G8x, G9x, GBx • 4180–CTO, 62x, 63x, 64x, 65x, K2x, K3x, K4x, K5x, K6x, K7x, K8x, K9x, KAx, KBx, KCx, KDx, KEx, KFx, KGx, KHx, KJx, KKx, KLx, KMx, KNx, KPx, KQx, KRx, KSx, KTx, KUx, KVx, KWx, KXx, KYx, KZx, L2x, L3x, L4x, L5x, L6x, L7x, L8x, L9x, LAx, LBx, LCx, LDx, LEx, LFx, LGx, LHx, LJx, LKx, LLx, LMx, LNx, LPx, LQx, LRx, LSx, LTx, LUx, LVx, LWx, LXx, LYx, LZx, M2x, M3x, M4x, M5x, M6x, M7x, M8x, M9x, MAx, MBx, MCx, MDx, MEx, MFx, MGx, MHx, MJx • 4236–CTO, 62x, 63x, 64x, 65x, N2x, N3x, N4x, N5x, N6x, N7x, N8x, N9x, NAx, NBx, NCx, NDx, NEx, NFx, NGx, NHx, NKx, NLx, NMx, NNx, NPx, NQx, NRx, MBx	04W1615	N

Table 41. Parts list—14.0-inch HD+ (1600 x 900) LED backlight Anti-Glare Display (continued)

No.	FRU (14.0-inch HD+ (1600 x 900) LED backlight Anti-Glare Display)	FRU no.	CRU ID
5	Wireless antenna (wireless LAN/wirless WAN) • 4177–CTO, 22x, 23x, 24x, 25x, 26x, 27x, 28x, 29x, 2Ax, 2Bx, 2Cx, 2Dx, 2Ex, 2Fx, 2Gx, 2Hx, 2Jx, 2Kx, 2Lx, 2Mx, 2Nx, 2Px, Q2x, Q3x, Q4x, Q5x, Q7x, Q8x, QAx, QBx, QCx, QDx • 4178–CTO, 52x, 53x, 54x, 55x, 56x, 57x, 58x, 59x, 5Ax, 5Bx, 5Cx, 5Dx, 5Ex, 5Fx, 5Gx, 5Hx, 5Jx, 5Kx, 5Lx, 5Mx, 5Nx, 5Px, 5Qx, 5Rx, 5Sx, 5Tx, 5Ux, 5Vx, 5Wx, 5Xx, 5Yx, 5Zx, 92x, 93x, 94x, 95x, 96x, 97x, 98x, 99x, 9Ax, 9Bx, 9Cx, 9Dx, 9Ex, 9Fx, 9Gx, 9Hx, 9Jx, 9Kx, 9Lx, 9Mx, 9Nx, 9Px, 9Qx, 9Rx, 9Sx, 9Tx, 9Ux, 9Vx, 9Wx, 9Xx, 9Yx • 4179–CTO, G2x, G3x, G4x, G5x, G6x, G7x, G8x, G9x, GBx • 4180–CTO, 62x, 63x, 64x, 65x, K2x, K3x, K4x, K5x, K6x, K7x, K8x, K9x, KAx, KBx, KCx, KDx, KEx, KFx, KGx, KHx, KJx, KKx, KLx, KMx, KNx, KPx, KQx, KRx, KSx, KTx, KUx, KVx, KWx, KXx, KYx, KZx, L2x, L3x, L4x, L5x, L6x, L7x, L8x, L9x, LAx, LBx, LCx, LDx, LEx, LFx, LGx, LHx, LJx, LKx, LLx, LMx, LNx, LPx, LQx, LRx, LSx, LTx, LUx, LVx, LWx, LXx, LYx, LZx, M2x, M3x, M4x, M5x, M6x, M7x, M8x, M9x, MAx, MBx, MCx, MDx, MEx, MFx, MGx, MHx, MJx • 4236–CTO, 62x, 63x, 64x, 65x, N2x, N3x, N4x, N5x, N6x, N7x, N8x, N9x, NAx, NBx, NCx, NDx, NEx, NFx, NGx, NHx, NKx, NLx, NMx, NNx, NPx, NQx, NRx, MBx	04W1616	N
6	LCD rear cover assembly • 4177–CTO, 22x, 23x, 24x, 25x, 26x, 27x, 28x, 29x, 2Ax, 2Bx, 2Cx, 2Dx, 2Ex, 2Fx, 2Gx, 2Hx, 2Jx, 2Kx, 2Lx, 2Mx, 2Nx, 2Px, Q2x, Q3x, Q4x, Q5x, Q7x, Q8x, QAx, QBx, QCx, QDx • 4178–CTO, 52x, 53x, 54x, 55x, 56x, 57x, 58x, 59x, 5Ax, 5Bx, 5Cx, 5Dx, 5Ex, 5Fx, 5Gx, 5Hx, 5Jx, 5Kx, 5Lx, 5Mx, 5Nx, 5Px, 5Qx, 5Rx, 5Sx, 5Tx, 5Ux, 5Vx, 5Wx, 5Xx, 5Yx, 5Zx, 92x, 93x, 94x, 95x, 96x, 97x, 98x, 99x, 9Ax, 9Bx, 9Cx, 9Dx, 9Ex, 9Fx, 9Gx, 9Hx, 9Jx, 9Kx, 9Lx, 9Mx, 9Nx, 9Px, 9Qx, 9Rx, 9Sx, 9Tx, 9Ux, 9Vx, 9Wx, 9Xx, 9Yx • 4179–CTO, G2x, G3x, G4x, G5x, G6x, G7x, G8x, G9x, GBx • 4180–CTO, 62x, 63x, 64x, 65x, K2x, K3x, K4x, K5x, K6x, K7x, K8x, K9x, KAx, KBx, KCx, KDx, KEx, KFx, KGx, KHx, KJx, KKx, KLx, KMx, KNx, KPx, KQx, KRx, KSx, KTx, KUx, KVx, KWx, KXx, KYx, KZx, L2x, L3x, L4x, L5x, L6x, L7x, L8x, L9x, LAx, LBx, LCx, LDx, LEx, LFx, LGx, LHx, LJx, LKx, LLx, LMx, LNx, LPx, LQx, LRx, LSx, LTx, LUx, LVx, LWx, LXx, LYx, LZx, M2x, M3x, M4x, M5x, M6x, M7x, M8x, M9x, MAx, MBx, MCx, MDx, MEx, MFx, MGx, MHx, MJx • 4236–CTO, 62x, 63x, 64x, 65x, N2x, N3x, N4x, N5x, N6x, N7x, N8x, N9x, NAx, NBx, NCx, NDx, NEx, NFx, NGx, NHx, NKx, NLx, NMx, NNx, NPx, NQx, NRx, MBx	04W1608	N
7	LED cable • 4177–CTO, 22x, 23x, 24x, 25x, 26x, 27x, 28x, 29x, 2Ax, 2Bx, 2Cx, 2Dx, 2Ex, 2Fx, 2Gx, 2Hx, 2Jx, 2Kx, 2Lx, 2Mx, 2Nx, 2Px, Q2x, Q3x, Q4x, Q5x, Q7x, Q8x, QAx, QBx, QCx, QDx • 4178–CTO, 52x, 53x, 54x, 55x, 56x, 57x, 58x, 59x, 5Ax, 5Bx, 5Cx, 5Dx, 5Ex, 5Fx, 5Gx, 5Hx, 5Jx, 5Kx, 5Lx, 5Mx, 5Nx, 5Px, 5Qx, 5Rx, 5Sx, 5Tx, 5Ux, 5Vx, 5Wx, 5Xx, 5Yx, 5Zx, 92x, 93x, 94x, 95x, 96x, 97x, 98x, 99x, 9Ax, 9Bx, 9Cx, 9Dx, 9Ex, 9Fx, 9Gx, 9Hx, 9Jx, 9Kx, 9Lx, 9Mx, 9Nx, 9Px, 9Qx, 9Rx, 9Sx, 9Tx, 9Ux, 9Vx, 9Wx, 9Xx, 9Yx • 4179–CTO, G2x, G3x, G4x, G5x, G6x, G7x, G8x, G9x, GBx • 4180–CTO, 62x, 63x, 64x, 65x, K2x, K3x, K4x, K5x, K6x, K7x, K8x, K9x, KAx, KBx, KCx, KDx, KEx, KFx, KGx, KHx, KJx, KKx, KLx, KMx, KNx, KPx, KQx, KRx, KSx, KTx, KUx, KVx, KWx, KXx, KYx, KZx, L2x, L3x, L4x, L5x, L6x, L7x, L8x, L9x, LAx, LBx, LCx, LDx, LEx, LFx, LGx, LHx, LJx, LKx, LLx, LMx, LNx, LPx, LQx, LRx, LSx, LTx, LUx, LVx, LWx, LXx, LYx, LZx, M2x, M3x, M4x, M5x, M6x, M7x, M8x, M9x, MAx, MBx, MCx, MDx, MEx, MFx, MGx, MHx, MJx • 4236–CTO, 62x, 63x, 64x, 65x, N2x, N3x, N4x, N5x, N6x, N7x, N8x, N9x, NAx, NBx, NCx, NDx, NEx, NFx, NGx, NHx, NKx, NLx, NMx, NNx, NPx, NQx, NRx, MBx	04W1619	N

Table 41. Parts list—14.0-inch HD+ (1600 x 900) LED backlight Anti-Glare Display (continued)

No.	FRU (14.0-inch HD+ (1600 x 900) LED backlight Anti-Glare Display)	FRU no.	CRU ID
8	LCD cable • 4177–CTO, 2Kx, 2Lx, 2Nx, 2Px, Q2x, Q3x, Q8x, QAx, QBx • 4178–CTO, 54x, 55x, 58x, 59x, 5Nx, 5Px, 5Qx, 5Rx, 5Sx, 5Tx, 5Ux, 5Vx, 5Wx, 5Xx, 5Yx, 5Zx, 96x, 97x, 99x, 9Ax, 9Bx, 9Cx, 9Jx, 9Kx, 9Lx, 9Mx, 9Px, 9Qx, 9Rx, 9Sx, 9Tx, 9Xx • 4179–CTO • 4180–CTO, 63x, 65x, KHx, KJx, KKx, KPx, KQx, KRx, KSx, KTx, KUx, KVx, KWx, KXx, KYx, KZx, L2x, L3x, L4x, L5x, L6x, LAx, LBx, LQx, LZx, M8x, MBx, MDx, MEx, MFx, MHx, MJx • 4236–CTO, 63x, 65x, N4x, N6x, N7x, N8x, N9x, NAx, NBx, NEx, NFx, NGx, NHx, NNx, MBx	04W1618	N
9	LED sub card • 4177–CTO, 22x, 23x, 24x, 25x, 26x, 27x, 28x, 29x, 2Ax, 2Bx, 2Cx, 2Dx, 2Ex, 2Fx, 2Gx, 2Hx, 2Jx, 2Kx, 2Lx, 2Mx, 2Nx, 2Px, Q2x, Q3x, Q4x, Q5x, Q7x, Q8x, QAx, QBx, QCx, QDx • 4178–CTO, 52x, 53x, 54x, 55x, 56x, 57x, 58x, 59x, 5Ax, 5Bx, 5Cx, 5Dx, 5Ex, 5Fx, 5Gx, 5Hx, 5Jx, 5Kx, 5Lx, 5Mx, 5Nx, 5Px, 5Qx, 5Rx, 5Sx, 5Tx, 5Ux, 5Vx, 5Wx, 5Xx, 5Yx, 5Zx, 92x, 93x, 94x, 95x, 96x, 97x, 98x, 99x, 9Ax, 9Bx, 9Cx, 9Dx, 9Ex, 9Fx, 9Gx, 9Hx, 9Jx, 9Kx, 9Lx, 9Mx, 9Nx, 9Px, 9Qx, 9Rx, 9Sx, 9Tx, 9Ux, 9Vx, 9Wx, 9Xx, 9Yx • 4179–CTO, G2x, G3x, G4x, G5x, G6x, G7x, G8x, G9x, GBx • 4180–CTO, 62x, 63x, 64x, 65x, K2x, K3x, K4x, K5x, K6x, K7x, K8x, K9x, KAx, KBx, KCx, KDx, KEx, KFx, KGx, KHx, KJx, KKx, KLx, KMx, KNx, KPx, KQx, KRx, KSx, KTx, KUx, KVx, KWx, KXx, KYx, KZx, L2x, L3x, L4x, L5x, L6x, L7x, L8x, L9x, LAx, LBx, LCx, LDx, LEx, LFx, LGx, LHx, LJx, LKx, LLx, LMx, LNx, LPx, LQx, LRx, LSx, LTx, LUx, LVx, LWx, LXx, LYx, LZx, M2x, M3x, M4x, M5x, M6x, M7x, M8x, M9x, MAx, MBx, MCx, MDx, MEx, MFx, MGx, MHx, MJx • 4236–CTO, 62x, 63x, 64x, 65x, N2x, N3x, N4x, N5x, N6x, N7x, N8x, N9x, NAx, NBx, NCx, NDx, NEx, NFx, NGx, NHx, NKx, NLx, NMx, NNx, NPx, NQx, NRx, MBx	04W1370	N
10	Clear plate kit • 4177–CTO, 22x, 23x, 24x, 25x, 26x, 27x, 28x, 29x, 2Ax, 2Bx, 2Cx, 2Dx, 2Ex, 2Fx, 2Gx, 2Hx, 2Jx, 2Kx, 2Lx, 2Mx, 2Nx, 2Px, Q2x, Q3x, Q4x, Q5x, Q7x, Q8x, QAx, QBx, QCx, QDx • 4178–CTO, 52x, 53x, 54x, 55x, 56x, 57x, 58x, 59x, 5Ax, 5Bx, 5Cx, 5Dx, 5Ex, 5Fx, 5Gx, 5Hx, 5Jx, 5Kx, 5Lx, 5Mx, 5Nx, 5Px, 5Qx, 5Rx, 5Sx, 5Tx, 5Ux, 5Vx, 5Wx, 5Xx, 5Yx, 5Zx, 92x, 93x, 94x, 95x, 96x, 97x, 98x, 99x, 9Ax, 9Bx, 9Cx, 9Dx, 9Ex, 9Fx, 9Gx, 9Hx, 9Jx, 9Kx, 9Lx, 9Mx, 9Nx, 9Px, 9Qx, 9Rx, 9Sx, 9Tx, 9Ux, 9Vx, 9Wx, 9Xx, 9Yx • 4179–CTO, G2x, G3x, G4x, G5x, G6x, G7x, G8x, G9x, GBx • 4180–CTO, 62x, 63x, 64x, 65x, K2x, K3x, K4x, K5x, K6x, K7x, K8x, K9x, KAx, KBx, KCx, KDx, KEx, KFx, KGx, KHx, KJx, KKx, KLx, KMx, KNx, KPx, KQx, KRx, KSx, KTx, KUx, KVx, KWx, KXx, KYx, KZx, L2x, L3x, L4x, L5x, L6x, L7x, L8x, L9x, LAx, LBx, LCx, LDx, LEx, LFx, LGx, LHx, LJx, LKx, LLx, LMx, LNx, LPx, LQx, LRx, LSx, LTx, LUx, LVx, LWx, LXx, LYx, LZx, M2x, M3x, M4x, M5x, M6x, M7x, M8x, M9x, MAx, MBx, MCx, MDx, MEx, MFx, MGx, MHx, MJx • 4236–CTO, 62x, 63x, 64x, 65x, N2x, N3x, N4x, N5x, N6x, N7x, N8x, N9x, NAx, NBx, NCx, NDx, NEx, NFx, NGx, NHx, NKx, NLx, NMx, NNx, NPx, NQx, NRx, MBx	04W1620	N

Keyboard

Table 42. Parts list—Keyboard

Language	FRU no.			CRU ID
Arabic	45N2076	45N2146	45N2216	**
Belgian	45N2077	45N2147	45N2217	
Brazilian Portuguese	45N2075	45N2145	45N2215	
Bulgarian	45N2078	45N2148	45N2218	
Canadian French (058)	45N2073	45N2143	45N2213	
Canadian French (Acnor)	45N2072	45N2142	45N2212	
Czech	45N2079	45N2149	45N2219	
Danish	45N2080	45N2150	45N2220	
Finnish, Swedish	45N2097	45N2167	45N2237	
French	45N2082	45N2152	45N2222	
German	45N2083	45N2153	45N2223	
Greek (U. S. English and Greek layout)	45N2084	45N2154	45N2224	
Hebrew	45N2085	45N2155	45N2225	
Hungarian	45N2086	45N2156	45N2226	
Icelandic	45N2087	45N2157	45N2227	
Italian	45N2088	45N2158	45N2228	
Japanese	45N2102	45N2172	45N2242	
Kazakhstan	45N2089	45N2159	45N2229	
Korean	45N2103	45N2173	45N2243	
Latin American Spanish	45N2074	45N2144	45N2214	
Norwegian	45N2091	45N2161	45N2231	
Polish	45N2092	45N2162	45N2232	
Portuguese	45N2093	45N2163	45N2233	
Russian	45N2094	45N2164	45N2234	
Slovak	45N2095	45N2165	45N2235	
Slovenian	45N2096	45N2166	45N2236	
Spanish	45N2081	45N2151	45N2221	
Swiss	45N2098	45N2168	45N2238	
Thai	45N2105	45N2175	45N2245	
Traditional Chinese	45N2104	45N2174	45N2244	
Turkish	45N2099	45N2169	45N2239	
U.K. English	45N2100	45N2170	45N2240	
U.S. English	45N2071	45N2141	45N2211	
U.S. English (International, with a Euro symbol)	45N2101	45N2171	45N2241	
Netherlands	45N2090	45N2160	45N2230	
Turkish (F Type)	60Y9552	60Y9554	60Y9550	

Miscellaneous parts

Table 43. Parts list—Miscellaneous parts

FRU	FRU no.	CRU ID
Screw kit: • M2 × 3 mm, black (50) • M2 × 5 mm, black (20) • M2 × 8 mm, black (15) • M2 × 10 mm, Silver (4) • M2 × 15 mm, black (8) • M2.5 × 4 mm, black (8) • M2.5 × 6 mm, black (8) • M2 (shoulder), black (4) • Hex stud, Silver (4)	04W1605	N
Seal kit	04W1606	N
Base miscellaneous parts: • Foot rubber - front left • Foot rubber - front right • Foot rubber - rear • Bottom shield • Insulation sheet - CPU • Insulation sheet - system board • Insulation sheet - touchpad • Insulation sheet - battery connector • Lens, LED (RJ-45) • Knob, wireless switch • Lever, wireless switch • ODD lock button • ODD eject spring • ODD eject button • ODD eject brecket • Dust filter 1 • Dust filter 2 • Dust filter 3 • Dust filter 4 • Dust filter 5 • ODD stop rubber • Sponge L43W4H5 • Sponge L15W4H5 • Sponge L110W4H5 • Sponge L85W3H3 • Sponge L26W4H1	04W1602	N

Table 43. Parts list—Miscellaneous parts (continued)

FRU	FRU no.	CRU ID
Keyboard bezel miscellaneous parts: • Magnet - suspend switch • Bracket - touchpad • Bracket - right speaker • Bracket - left speaker • Bracket - left speaker EMI spring • Bracket - FPR EMI • Speaker mesh • Face sheet - touchpad • ThinkPad logo • Bracket - touchpad button • Bracket - FPR • Insulation sheet - touchpad • Insulation sheet - fingerprint • LCD latch left • LCD latch right • LCD link • LCD latch spring	04W1603	N
System miscellaneous parts: • *(a)* Express dummy card • *(b)* Fan bracket, discrete • *(c)* LCD connector bracket • CPU mylar for 35W SV GT2 • 1394 cover • Dummy cover, RJ-11 • Plastic support for smart card • Blind sheet for SIM card • SIM dummy card **Note:** Italicized letters in parentheses are references to the exploded view in “Overall” on page 134.	04W1604	N
System board miscellaneous parts: • Insulation sheet - MB • Insulation sheet - DDR • Insulation sheet - express card • Insulation sheet - battery • Insulation sheet - docking • Insulation sheet - bottom hole • Insulation sheet - DC-IN • Bracket - express card • SIM guide bracket sub assy • CPU bracket sub assy • SIM slide spacer • SIM pull tab • Sponge for RJ45 connector • Sponge for display port connector • Sponge for HDD 1 • Sponge for HDD 2 • Sponge for HDD 3 • Sponge for ODD 1 • Sponge for ODD 2	04W1601	N

Table 43. Parts list—Miscellaneous parts (continued)

FRU	FRU no.	CRU ID
LCD miscellaneous parts: • LCD front bezel • Rubber - LCD front bezel • Stopper - LCD front bezel • LED lens - LCD front bezel • Shield - EMC • Clear plate - LCD rear cover • LED lens - LCD rear cover • ThinkPad logo • Lenovo logo • LCD latch - right • LCD latch - left • Sponge - center • Sponge - upper • Sponge - lower • Stopper - upper right • Stopper - upper left • Stopper - lower right • Stopper - lower left	04W1607	N

Information about ac power adapters

Table 44. Parts list—2-pin ac power adapters

FRU	FRU no.	CRU ID
2-pin (65 W, 20 V) adapter (models CTO, xxE, xxF, xxJ, xxL, xxP, xxS, xxU, xxY)	42T5282	*
2-pin (65 W, 20 V) adapter (models CTO, xxE, xxF, xxJ, xxL, xxP, xxS, xxU, xxY)	42T4423	
2-pin (65 W, 20 V) adapter (models CTO, xxE, xxF, xxJ, xxL, xxP, xxS, xxU, xxY)	42T4419	
2-pin (90 W, 20 V) adapter (models CTO, xxE, xxF, xxJ, xxL, xxP, xxS, xxU, xxY)	42T4427	
2-pin (90 W, 20 V) adapter (models CTO, xxE, xxF, xxJ, xxL, xxP, xxS, xxU, xxY)	42T4431	
2-pin (90 W, 20 V) adapter (models CTO, xxE, xxF, xxJ, xxL, xxP, xxS, xxU, xxY)	42T4435	
2-pin (90 W, 20 V) adapter (models CTO, xxE, xxF, xxJ, xxL, xxP, xxS, xxU, xxY)	42T4439	

Table 45. Parts list—3-pin ac power adapters

FRU	FRU no.	CRU ID
3-pin (65 W, 20 V) adapter (models CTO, xxA, xxB, xxG, xxH, xxK, xxM, xxQ, xxT, xxV)	42T5283	*
3-pin (65 W, 20 V) adapter (models CTO, xxA, xxB, xxG, xxH, xxK, xxM, xxQ, xxT, xxV)	42T4421	
3-pin (65 W, 20 V) adapter (models CTO, xxA, xxB, xxG, xxH, xxK, xxM, xxQ, xxT, xxV)	42T4417	
3-pin (90 W, 20 V) adapter (models CTO, xxA, xxB, xxG, xxH, xxK, xxM, xxQ, xxT, xxV)	42T4425	
3-pin (90 W, 20 V) adapter (models CTO, xxA, xxB, xxG, xxH, xxK, xxM, xxQ, xxT, xxV)	42T4429	
3-pin (90 W, 20 V) adapter (models CTO, xxA, xxB, xxG, xxH, xxK, xxM, xxQ, xxT, xxV)	42T4433	
3-pin (90 W, 20 V) adapter (models CTO, xxA, xxB, xxG, xxH, xxK, xxM, xxQ, xxT, xxV)	45N0068	

Power cords

A ThinkPad power cord for a specific country or region is usually available only in that country or region:

Table 46. Parts list—2-pin power cords

Country or region	FRU no.		CRU ID
Argentina • models -CTO, xxY	42T5020	42T5105	*
Brazil • models -CTO, xxP	42T5180	42T5183	
Canada, U.S. • models -CTO, xxF, xxL, xxS, xxU	42T5008	42T5093	
Japan • models -CTO, xxE, xxJ	42T5014	42T5099	

Table 47. Parts list—3-pin power cords

Country or region	FRU no.		CRU ID
Australia, New Zealand • models -CTO, xxM	42T5050	42T5135	*
Bangladesh, Sri Lanka, South Africa • models -CTO, xxG	42T5056	42T5141	
Canada, U.S. • models -CTO, xxG, xxT	42T5004	42T5089	
China (P.R.C.) (other than Hong Kong S.A.R.) • models -CTO, xxC	42T5065	42T5150	
Denmark • models -CTO, xxG	42T5041	42T5126	
European countries • models -CTO, xxG	42T5029	42T5114	
India • models -CTO, xxQ	42T5083	42T5168	
Israel • models -CTO, xxG	42T5062	42T5147	
Italy • models -CTO, xxG	42T5047	42T5132	
Korea • models -CTO, xxK	42T5077	42T5162	
Switzerland • models -CTO, xxG	42T5044	42T5129	
Taiwan • models -CTO, xxV	42T5071	42T5156	
U.K., China (Hong Kong S.A.R.) • models -CTO, xxB, xxG, xxH	42T5035	42T5120	

Recovery discs

Windows 7 Professional (32 bit) DVDs

Windows 7 Professional (32 bit) is preinstalled as the operating system in the following models:

- 4177-CTO, QAx, Q7x, QDx
- 4178-CTO, 9Qx, 9Px, 9Vx, 9Ux
- 4179-CTO, G7x, G3x
- 4180-CTO, MFx, LTx, LQx, LPx, LMx, LKx, LHx, LGx, LDx, LCx, L7x, KQx, KLx, K7x, K6x, K3x, LSx, LRx
- 4236-CTO, NEx, NDx, NAx, N9x, N8x, N7x, N6x, NLx

Table 48. Parts list—Windows 7 Professional (32 bit) recovery DVDs

Language	**P/N**	**CRU ID**
Simplified Chinese	03W7901	*
Japanese	03W7902	
US English	03W7903	

Windows 7 Professional (64 bit) DVDs

Windows 7 Professional (64 bit) is preinstalled as the operating system in the following models:

- 4177-CTO, 2Px, 2Nx, 2Kx, QBx, Q8x, Q5x, 2Cx, 27x, Q4x, Q3x, Q2x, 25x, 2Dx, QCx, 2Bx, 2Ax, 29x, 28x, 26x, QEx
- 4178-CTO, 9Yx, 9Xx, 9Wx, 9Tx, 9Sx, 9Rx, 9Mx, 9Lx, 9Kx, 9Jx, 9Cx, 9Bx, 9Ax, 99x, 96x, 93x, 5Zx, 5Yx, 5Xx, 5Wx, 5Vx, 5Ux, 5Tx, 5Sx, 5Rx, 5Qx, 5Px, 5Fx, 5Ex, 5Bx, 5Ax, 59x, 58x, 57x, 56x, 55x, 54x, 53x, 52x, 9Hx, 9Gx, 5Mx, 5Kx, 5Jx, 5Hx, 5Gx, 5Dx, 5Cx
- 4179-CTO, GBx
- 4180-CTO, MJx, MHx, MEx, MDx, MCx, MBx, M9x, M8x, M7x, M6x, M5x, M4x, M3x, M2x, LZx, LYx, LXx, LWx, LVx, LUx, 65x, 64x, 63x, 62x, LBx, LAx, L9x, L8x, L6x, L5x, L4x, L3x, L2x, KZx, KYx, KXx, KWx, KVx, KUx, KTx, KSx, KRx, KPx, KNx, KMx, KKx, KJx, KHx, KGx, KFx, KEx, KDx, KCx, KBx, KAx, K9x, K8x, K5x, K4x, K2x
- 4236-CTO, NNx, NMx, MBx, NHx, NGx, 65x, 64x, 63x, 62x, NFx, NBx, N5x, N4x, N3x, N2x

Table 49. Parts list—Windows 7 Professional (64 bit) recovery DVDs

Language	P/N	CRU ID
Arabic	03W7904	
Brazilian Portuguese	03W7905	
Simplified Chinese	03W7906	
Traditional Chinese	03W7907	
Czech	03W7908	
English (for India)	03W7909	
French	03W7910	
Greek	03W7911	
German	03W7912	
Hebrew	03W7913	
Traditional Chinese (Hong Kong S.A.R.)	03W7914	
Hungarian	03W7915	
Japanese	03W7916	
Korea	03W7917	
Polish	03W7918	
Portuguese	03W7919	
Romanian	03W7920	
Russian	03W7921	
Slovak	03W7922	
Spanish	03W7923	
Serbian-Cyrllic	03W7924	
Turkish	03W7925	
US English (Disabled)	03W7926	
US English	03W7927	
English, Danish, Finnish, Swedish, and Norwegian	03W7928	
English, Dutch, French, German, and Italian	03W7929	
English, Slovenian, and Croatian	03W7930	

Windows 7 Home Basic (32 bit) DVDs

Windows 7 Home Basic (32 bit) is preinstalled as the operating system in the following models:

- 4177-CTO, 2Ex, 24x, 23x, 22x
- 4178-CTO, 9Ex, 9Dx
- 4179-CTO, G9x, G8x
- 4180-CTO, MGx, MAx
- 4236-CTO

Table 50. Parts list—Windows 7 Home Basic (32 bit) recovery DVDs

Language	**P/N**	**CRU ID**
Arabic	03W7935	*
Brazilian Portuguese	03W7936	
Simplified Chinese	03W7937	
English (for India)	03W7938	
French	03W7939	
Portuguese	03W7940	
Russian	03W7941	
Spanish	03W7942	
Serbian-Cyrllic	03W7943	
Turkish	03W7944	
US English	03W7945	

Windows 7 Home Premium (32 bit) DVDs

Windows 7 Home Premium (32 bit) is preinstalled as the operating system in the following models:

- 4177-CTO
- 4178-CTO
- 4179-CTO, G4x
- 4180-CTO, LNx
- 4236-CTO, NCx

Table 51. Parts list—Windows 7 Home Premium (64 bit) recovery DVDs

Language	**P/N**	**CRU ID**
Simplified Chinese	03W7946	
English (for India)	03W7947	
US English	03W7948	

Windows 7 Home Premium (64 bit) DVDs

Windows 7 Home Premium (64 bit) is preinstalled as the operating system in the following models:

- 4177-CTO, 2Mx, 2Lx, 2Jx, QFx
- 4178-CTO, 9Nx, 9Fx
- 4179-CTO
- 4180-CTO
- 4236-CTO, NRx, NQx, NPx

Table 52. Parts list—Windows 7 Home Premium (64 bit) recovery DVDs

Language	**P/N**	**CRU ID**
Arabic	03W7949	*
Brazilian Portuguese	03W7950	
Simplified Chinese	03W7951	
Traditional Chinese	03W7952	
Czech	03W7953	
English (for India)	03W7954	
French	03W7955	
Greek	03W7956	
German	03W7957	
Hebrew	03W7958	
Traditional Chinese (Hong Kong S.A.R.)	03W7959	
Hungarian	03W7960	
Japanese	03W7961	
Korea	03W7962	
Polish	03W7963	
Portuguese	03W7964	
Romanian	03W7965	
Russian	03W7966	
Slovak	03W7967	
Spanish	03W7968	
Serbian-Cyrllic	03W7969	
Turkish	03W7970	
US English (Disabled)	03W7971	
US English	03W7972	
English, Danish, Finnish, Swedish, and Norwegian	03W7973	
English, Dutch, French, German, and Italian	03W7974	
English, Slovenian, and Croatian	03W7975	

Common service tools

Table 53. Parts list—Common service tools

Tool	P/N
Screwdriver kit	95F3598
1/4" drive spinner handle	1650840
1/4" Sq. to 1/4" hex torx adapter	93F2838
TR7-TR-10 tamper resistant torx bits	00P6967
Removal tool antenna RF connector	08K7159
USB 2.0 CD-RW/DVD-ROM combo drive II	40Y8687
USB cable	40Y8704
USB floppy diskette drive for maintenance diskette	05K9283
USB floppy diskette drive tool kit	27L3452
Test card for integrated Smart Card	42W7820
LENOVO ThinkPad Hardware Maintenance Diskette Version 1.76 or later **Note:** Download the file from the following Web site: http://www.lenovo.com/spm	—

Appendix A. Notices

Lenovo may not offer the products, services, or features discussed in this document in all countries. Consult your local Lenovo representative for information on the products and services currently available in your area. Any reference to a Lenovo product, program, or service is not intended to state or imply that only that Lenovo product, program, or service may be used. Any functionally equivalent product, program, or service that does not infringe any Lenovo intellectual property right may be used instead. However, it is the user's responsibility to evaluate and verify the operation of any other product, program, or service.

Lenovo may have patents or pending patent applications covering subject matter described in this document. The furnishing of this document does not give you any license to these patents. You can send license inquiries, in writing, to:

Lenovo (United States), Inc.
1009 Think Place - Building One
Morrisville, NC 27560
U.S.A.
Attention: Lenovo Director of Licensing

LENOVO GROUP LTD. PROVIDES THIS PUBLICATION "AS IS" WITHOUT WARRANTY OF ANY KIND, EITHER EXPRESS OR IMPLIED, INCLUDING, BUT NOT LIMITED TO, THE IMPLIED WARRANTIES OF NON-INFRINGEMENT, MERCHANTABILITY OR FITNESS FOR A PARTICULAR PURPOSE. Some jurisdictions do not allow disclaimer of express or implied warranties in certain transactions, therefore, this statement may not apply to you.

This information could include technical inaccuracies or typographical errors. Changes are periodically made to the information herein; these changes will be incorporated in new editions of the publication. Lenovo may make improvements and/or changes in the product(s) and/or the program(s) described in this publication at any time without notice.

The products described in this document are not intended for use in implantation or other life support applications where malfunction may result in injury or death to persons. The information contained in this document does not affect or change Lenovo product specifications or warranties. Nothing in this document shall operate as an express or implied license or indemnity under the intellectual property rights of Lenovo or third parties. All information contained in this document was obtained in specific environments and is presented as an illustration. The result obtained in other operating environments may vary.

Lenovo may use or distribute any of the information you supply in any way it believes appropriate without incurring any obligation to you.

Any references in this publication to non-Lenovo Web sites are provided for convenience only and do not in any manner serve as an endorsement of those Web sites. The materials at those Web sites are not part of the materials for this Lenovo product, and use of those Web sites is at your own risk.

Any performance data contained herein was determined in a controlled environment. Therefore, the result obtained in other operating environments may vary significantly. Some measurements may have been made on development-level systems and there is no guarantee that these measurements will be the same on generally available systems. Furthermore, some measurements may have been estimated through extrapolation. Actual results may vary. Users of this document should verify the applicable data for their specific environment.

© Copyright Lenovo 2011

Trademarks

The following terms are trademarks of Lenovo in the United States, other countries or both:

Active Protection System
Lenovo
Rescue and Recovery
ThinkLight
ThinkPad
ThinkVantage
TrackPoint
Ultrabay

IBM (used under license) is trademark of the International Business Machines Corporation in the United States, other countries, or both:

The following terms are trademarks of Microsoft Corporation in the United States, other countries, or both:

Windows
Windows Vista

The following terms are trademarks of Intel Corporation or its subsidiaries in the United States, other countries, or both:

Intel
Intel Centrino
Intel Core

Other company, product, or service names may be the trademarks or service marks of others.

ThinkPad®

Part Number: 0A60007

Printed in China

(1P) P/N: 0A60007