OUTDOOR IR COLOR CAMERA

BCH-IR SERIES

INSTRUCTION MANUAL

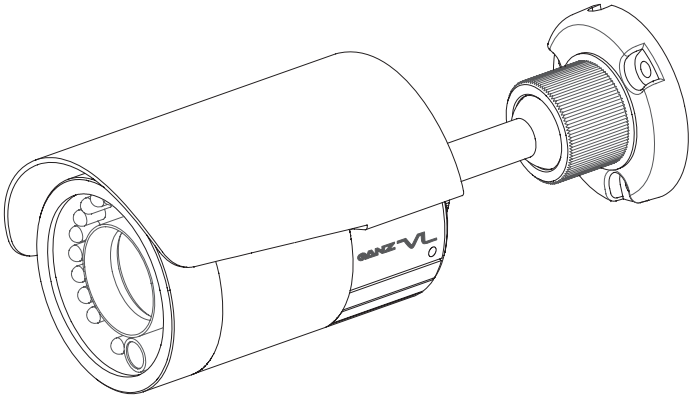

24VAC/12VDC

BCH-IR312NA

GANZ VL

VALUE SERIES

ENGLISH

Thank you for your purchase of this product. Before operating the product, please read this instruction manual carefully to ensure proper use of the product. Please store this instruction manual in a safe place for future reference.

CONTENTS

PRODUCT FEATURES

- High resolution 540TVL and low light performance surveillance camera with a built-in 1/3” CCD.
- A stylish all weather outdoor housing ideal for installations requiring a discreet appearance and outdoor performance.
- Integrated Computar varifocal lens allows for versatile applications and easy installation.
- Outstanding 0 lux performance with built in IR LEDs.
- Digital Day/Night feature switches to B/W image at night.
- Photocell activates IR light at night.
- Easy cable management with cable feed-through bracket.
- Built-in 20 LED lights.
- IP66 rating for all weather conditions.
- 24V AC / 12V DC Auto Sensing Dual Voltage.

SAFETY PRECAUTIONS

The installation should be made by a qualified service person and should conform to all local codes.

⚠ WARNING

This symbol indicates that there is a possibility of death or damage to operator or others.

To prevent fire or electric shock, do not expose this product to rain or moisture.

⚠ CAUTIONS

This symbol indicates that there is a possibility of injury or damage to equipment.

(1) Use only 24V AC power supply marked class 2 or +12V DC regulated power supply marked class 2.
(2) To prevent fire or electrical shock, UL listed class 2 wiring should be used for the 12V DC or 24V AC input terminal.
(3) Be sure to connect each lead to the appropriate terminal. Wrong connection may cause malfunction and / or damage to the video camera.
(4) Do not attempt to aim the camera at the sun or other extremely bright objects that cause smear to appear irrespective of whether the camera is operating or not. This can damage the CCD (Charge Coupled Device).
(5) Do not place the camera in the following locations.
① Locations subject to extremely high or low temperatures.
(Operating temperature range: -10°C to +50°C {14°F to 122°F})
(Storage temperature range: -20°C to +60°C {-4°F to 140°F})
② Locations where there are large amounts of water vapor and steam.
(6) Ensure the location selected is sufficiently strong enough to support the weight of the camera and is free from vibration.
(7) When this camera is installed near equipment that emits a strong electromagnetic field, some irregularity such as noise on the monitor screen may happen.
(8) Be sure to use screws suitable for the type of material to which the camera is being mounted.
(9) Do not allow the camera to be subjected to strong impacts or shocks. The camera could be damaged by improper handling or storage.
(10) Never attempt to disassemble or modify the camera.
(11) If an abnormality should occur, immediately turn off the power and consult your dealer.

This device complies with Part 15 of the FCC Rules. Operation is subject to following two conditions:
(1) This device may not cause harmful interference.
(2) This device must accept any interference received, including interference that may cause undesired operation.

PARTS DESCRIPTION

Outside

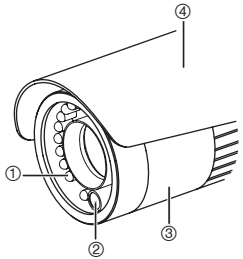

Inside

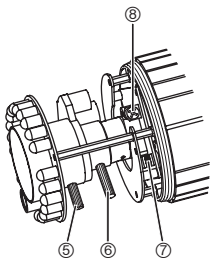

Bracket

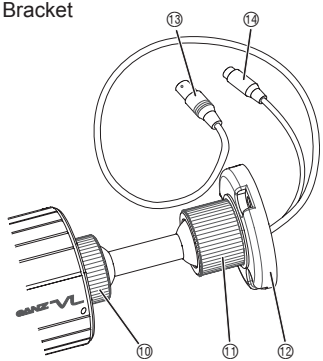

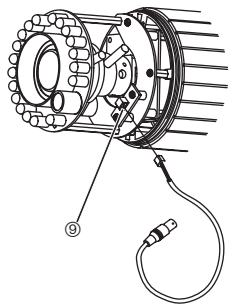

Service connector (*optional)

* Unscrew the Front Cover counterclockwise to open the unit for adjustments. Once adjusted, screw the Front Cover back and tighten it clockwise, and refrain from opening and closing frequently to ensure the best waterproof and condensation free performance.

① IR LED
② Photo sensor
③ Front cover
④ Sunshield
⑤ Focus adjustment lever (Lock screw)
⑥ View angle adjustment lever (Lock screw)
⑦ DIP SW (AGC ON/OFF, FL ON/OFF, BLC ON/OFF, ALC⇔ELC)
⑧ DC iris level adjustment volume
⑨ Service jack socket
⑩ Locking ring (Body)
⑪ Locking ring (Bracket)
⑫ Mounting base
⑬ BNC connector for video output
⑭ DC jack for power input (12V DC or 24V AC)

Accessories

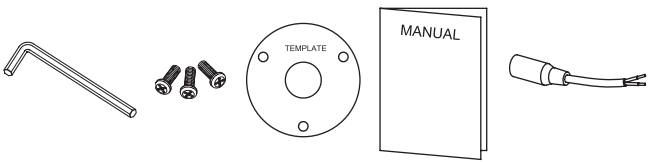

- Wrench: 1ea
- Bracket screw: 3ea
- Template: 1ea
- Instruction manual: 1ea
- Additional power connector: 1ea

● Attaching to the ceiling

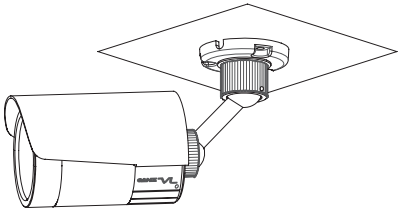

● Attaching to the wall

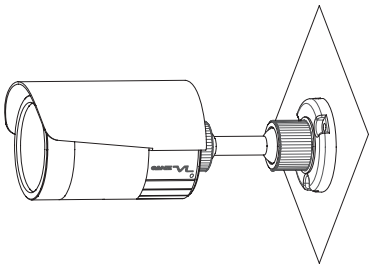

● Attaching to the ceiling or wall

This section explains how to install the unit where cables are running through the interior of the ceiling or wall.

- Drilling holes in the ceiling or wall:
  Use the template included to mark out the position on the ceiling or wall where you want to install the unit.
  - When running cables through the interior of the ceiling or wall, use the template, and drill three holes for screws used to attach the camera body and one hole for the cables (Cables).

⚠ CAUTIONS

- Attached screws are not necessarily suitable for all applications. Ensure to check if the screws are suitable for the intended applications.

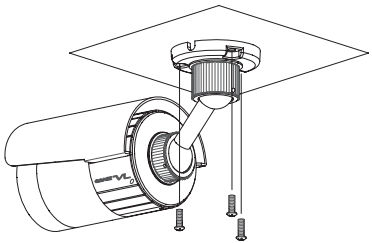

● Adjusting the camera direction

This camera can be easily adjusted for viewing in all directions. After attaching the camera on the wall or ceiling, adjust camera for the desired direction. Then tighten each locking ring and lock rings with an allen wrench as shown in the picture below.

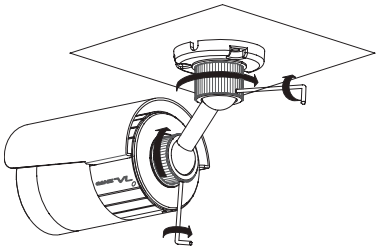

Special instruction

- To ensure the best low light performance, this camera has IR LED device to change automatically to night mode when the environment gets dark. If the high light source or some object reflecting very bright light is placed within 1m from the installed camera, it interferes with IR LED performance so that Day & Night function may not perform at the optimum level. Ensure that the field conditions are suitable before installing the camera unit.

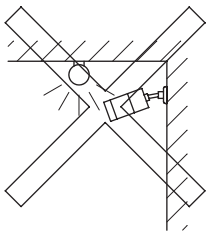

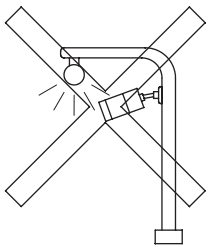

● Connecting the cables

Connect the power and video cables.

Connect the video cable from the monitor and the coaxial video cable attached to the camera body.

- For using DC 12V, connect DC jack from camera with power supply (CLASS 2 ONLY). If necessary, after cutting off DC jack from camera connect it with power supply.
- For using AC 24V, after cutting off DC jack from camera connect it with power supply (CLASS ONLY 2)

Attention

- Specification below is recommended as an Output rated capacity of Power supply that is connected to camera.

Input power	Voltage	current
12V DC	12V DC ± 10%	500mA ± 10%
24V AC	24V AC ± 10%	400mA ± 10%

Attention

- Be sure to check that the cables are connected correctly before turning on the power.
- Turning on the power when the cables are connected with incorrect polarity may damage the camera.

● Adjusting the DIP Switch Mode

⚠ CAUTIONS

- Each of the following functions can be adjusted by ON/OFF of the Switch.

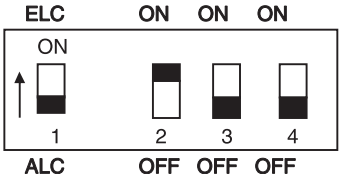

The setting modes shown at left are (=■) actual factory default settings.

1	ELC/ALC	ELC	Easy back focus adjustment to maximize the best focusing (refer to Attention ①)
		ALC	Factory set position
2	AGC (Auto Gain Control)	ON	Depending on Video signal, Gain is controlled automatically. (Factory set position)
		OFF	Apply in the stable light condition
3	BLC (Backlight compensation)	ON	Select this position when a strong light is in the back ground.
		OFF	Factory set position
4	FL (Flickerless)	ON	Shutter speed to be fixed at 1/100 (NTSC) 1/120 (PAL) (refer to Attention ②)
		OFF	(Factory set position) * Caution: Never set to “ON” mode in ordinary locations except for special locations like Tokyo area in Japan, etc.

☞ Attention

① ELC Mode: This special mode is not only to help prevent focus shift but also to make the lens focus adjustment easier in the field of installation. Simply make the adjustment in the following order:
- Select ELC mode
- Adjust lens focus well
- After adjusting, select ALC mode

② Setting the Flickerless function to “ON” under low light conditions may reduce the sensitivity.

● Adjusting the view angle and focus

① Move the lever to adjust focus and zoom after taking off the Front Cover.
② Turn focus and zoom levers in clockwise direction to fix the positions.

● Adjusting the DC iris level

Adjust the DC iris level to suit the environment.

● Service Jack Socket

A service jack socket is provided for temporary video connection when focusing the camera.

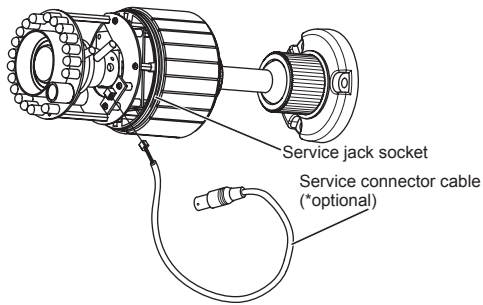

SPECIFICATIONS

Model name		BCH-IR312NA
TV system		NTSC
Scanning system		2:1 Interlace
Image sensor		1/3”-Type Interline transfer CCD
Effective elements		768 (H) x 494 (V)
Scanning frequency		15.734kHz (H) / 59.94Hz (V)
Video output		1.0V p-p / 75Ω
Horizontal resolution		540 TVL
Min. Illuminance		0 lux (B/W Mode - at IR LED ON)
Day / Night		Digital Day / Night
S/N ratio		More than 50 dB (at minimum AGC gain)
Gamma characteristic		0.45
IR Illumination		20 IR LEDs
Sync. System		Internal only
Electronic shutter		1/60 sec. (FL OFF), 1/100sec. (FL ON)
White balance		ATW
Power supply		AC 24V ± 10%, 60 ± 1Hz, DC 12V ± 10%
Power consumption	DC 12V	6W
	AC 24V	5.5W
Ambient temperature		Operation: -10°C to +50°C / Storage: -20°C to +60°C
Ambient humidity (No condensing)		Operation: Max. 85%RH / Storage: Max. 95%RH
IP rating		IP66
External dimensions		117(L) x 84Φ (Included sunshield)
Weight		650g
Adjustment volumes		DC Iris Adjustment
Switches, Bolts		Dip Switch
Accessories		Wrench, Bracket Tapping Screw (M4x20 : 3pcs), Template, Instruction Manual, Additional Power Connector

* The specifications and/or appearance of the product may change without a prior notice.

LENS SPECIFICATIONS

Max. aperture ratio		1:1.4 - 2.9
Focal length		3.3mm - 12mm
Iris (DC auto iris)		F1.4 - F360C
Angle of view (Wide to Tele)	D	125.70° - 29.90°
	H	89.80° - 23.90°
	V	63.60° - 17.90°

* The specifications and/or appearance of the product may change without a prior notice.

CBC Co.,Ltd.
Tokyo, Japan
www.GANZ.jp
www.computarganz.com

147-1.0