Professional Notebook / Workstation English

EasyGuide

CELSIUS H / LIFEBOOK E Series

Are there ...

... any technical questions or problems?

Please contact:

- our Hotline/Help Desk (see the enclosed Help Desk List or the Internet: "www.fujitsu-siemens.com/support/")
- Your sales partner
- Your sales office

Additional information is contained in the Help Desk list and the "Warranty" manual. The "Warranty" manual can be found on the "Drivers & Utilities" CD/DVD.

Latest information on our products, tips, updates etc. can be found on our website at: "www.fujitsu-siemens.com"

This manual was produced by Xerox Global Services

Published by
Fujitsu Siemens Computers GmbH

AG 05/07

Edition 1

Order no.: A26391-K226-Z120-1-7619

CELSIUS H /LIFEBOOK E Series

EasyGuide

Innovative technology...	**1**
Notational conventions	**2**
Important notes	**3**
Ports and operating elements	**4**
Removing and installing components during servicing	**22**
Technical data	**26**
Index	**29**

Adobe and Acrobat are trademarks of Adobe Systems Incorporated and may be protected in certain countries.

The Bluetooth trademarks are the property of Bluetooth SIG, Inc., U.S.A. licensed for Fujitsu Siemens Computers GmbH.

Intel is a registered trademark, Core is a trademark of Intel Corporation, USA.

Kensington and MicroSaver are registered trademarks of ACCO World Corporation.

Macrovision is a trademark of Macrovision Corporation, USA.

Microsoft, MS, MS-DOS, Windows, Windows NT and Windows Vista are registered trademarks of the Microsoft Corporation.

All other trademarks referenced are trademarks or registered trademarks of their respective owners, whose protected rights are acknowledged.

Copyright © Fujitsu Siemens Computers GmbH 2007

All rights reserved, including rights of translation, reproduction by printing, copying or similar methods, in part or in whole.

Offenders will be liable for damages.

All rights reserved, including rights created by patent grant or registration of a utility model or design.

Delivery subject to availability. Right of technical modification reserved.

Contents

Innovative technology... 1

Notational conventions 2

Important notes 3

Ports and operating elements 4
Opened Notebook 4
Left side 5
Right side 5
Rear 6
Under side 7
Switching on the notebook 8
Switching off the Notebook 9
Status indicator panel 10
Key combinations 12
Easy Launch keys 14
Configuring Easy Launch keys 14
Camera (optional) 15
Removing and installing the battery 15
Removing the battery 16
Installing battery 16
Removing and installing the air filter 17
Air filter removal 17
Install air filter 18
SIM card 19
Inserting the SIM card 19
Removing a SIM card 20
Radio components: UMTS (optional)/wireless LAN/Bluetooth 21
Switching the radio components on and off 21

Removing and installing components during servicing 22
Notes on installing and removing boards and components 22
Removing and installing memory modules 23
Cover removal 24
Removing memory modules 24
Installing a memory module 24
Attaching the cover 25

Technical data 26
CELSIUS H250/LIFEBOOK E8410 26
Battery 27
Mains adapter 80W 28
100W mains adapter 28

Index 29

Innovative technology…

... and an ergonomic design make your notebook a reliable, convenient mobile PC.

This manual describes the CELSIUS H250 mobile workstation and the LIFEBOOK E8410. Most of the sections in this manual apply to all models – any differences are indicated separately.

Your notebook features the very latest technology so that you get the best performance from your computing experience. Depending on which model you own, you have access to:

- Up to 4 Gbyte of main memory (RAM)
- A PC card slot for using a type I or type II PC card
- An ExpressCard slot for operating an ExpressCard/34 or ExpressCard/54
- a SIM card slot in which you can insert a SIM card
- a memory card slot for transferring digital photos, music and videos quickly onto your notebook
- a SmartCard reader to protect your notebook from unauthorised access
- An internal modem for connecting to the internet
- an S-Video Out socket for connecting your notebook to your television
- A FireWire port for connecting high speed devices such as digital camcorders
- A module bay for operating the following modules:
  - Second battery
  - Second hard disk drive
  - Combo drive (CD-RW/DVD)
  - Super-multi format DVD burner with double layer support
  - Weight Saver
- a touchpad and an additional touchstick
- an integral camera to take photos and to video chat
- an audio controller, two internal microphones and two internal loudspeakers for true audio enjoyment.
- You can even connect an external microphone and external loudspeakers to obtain an even better sound quality

With the user-friendly *BIOS-Setup* you can control the hardware of your notebook and protect your system better against unauthorised access by using the powerful password properties.

This operating manual tells you how to put your notebook into operation and how to operate it in daily use.

Further information on this notebook is provided:

- in the "Professional Notebook" operating instructions
- in the "Safety" and "Warranty" manuals
- in the "Wireless LAN" manual
- in the documentation of the operating system
- In the information files (e.g. *.TXT, *.DOC, *.WRI, *.HLP, *.PDF)

i

You can find information on accessories for your notebook at "www.fujitsu-siemens.com/accessories".

Notational conventions

⚠	Pay particular attention to text marked with this symbol. Failure to observe this warning endangers your life, destroys the device, or may lead to loss of data. Failure to follow the instructions may lead to loss of data, invalidate your warranty, destroy the device, or endanger your life
i	indicates important information that is required to use the device properly.
▶	refers to an action which you must carry out.
↳	indicates a result
`This style`	flags data entered using the keyboard in a program dialog or command line, e.g. your password (**`Name123`**) or a command to launch a program (**`start.exe`**)
`This style`	refers to information displayed by a program on the screen, e.g.: `Installation is completed`
This style	is for • terms and texts in a software user interface, e.g.: Click*Save*. • names of programs or files, e.g. *Windows* or *setup.exe*.
"This style"	is for • cross-references to another section, e.g. "Safety information" • Cross-references to an external source, e.g. a web address: For more information, go to" www.fujitsu-siemens.com" • indicates names of CDs and DVDs as well as names and titles of other materials, e.g.: "CD/DVD Drivers & Utilities" or "Safety" manual
Abc	refers to a key on the keyboard, e.g.: F10
This style	flags concepts and text that are emphasised or highlighted, e.g.: **Do not switch off device**

Important notes

Take note of the safety hints provided in the "Safety" manual, in the "Professional Notebook" operating manual and in this manual.

Ports and operating elements

This chapter presents the individual hardware components of your notebook. You can obtain an overview of the ports and operating elements of the notebook. Please familiarise yourself with these components before you start to work with your notebook.

Opened Notebook

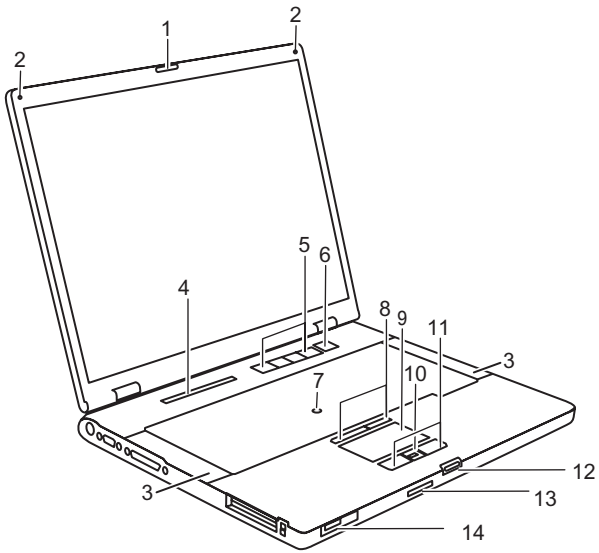

1 = Camera
2 = Built-in microphones
3 = Loudspeaker
4 = Status indicator panel
5 = Easy Launch keys
6 = On/Off switch
7 = TouchStick
8 = TouchStick keys
9 = Touchpad
10 = Scroll bar or fingerprint sensor
11 = Touchpad keys
12 = Screen lock
13 = Memory card slot
14 = ON/OFF switch for radio components

Left side

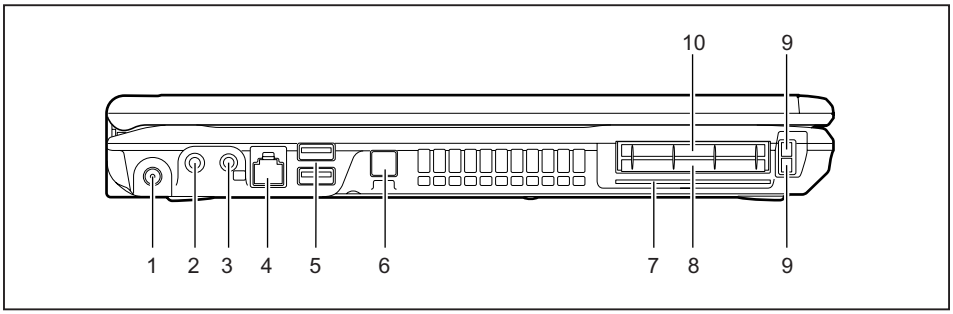

1 = DC IN jack
2 = Microphone port
3 = Headphone port / SPDIF (CELSIUS H250 only)
4 = Modem port
5 = USB ports
6 = FireWire port
7 = SmartCard reader
8 = PC card slot
9 = Card eject button
10 = ExpressCard slot

Right side

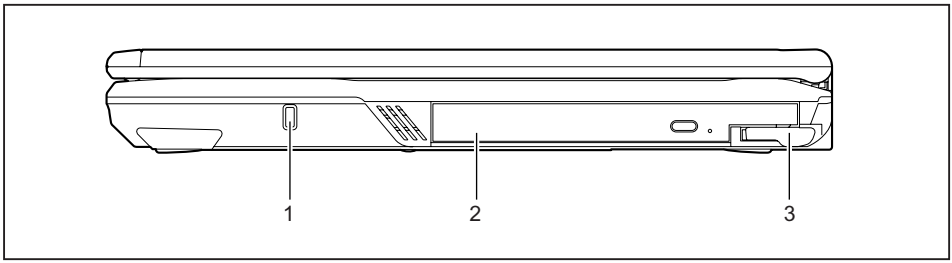

1 = Kensington Lock
2 = Module
3 = Eject lever for module

Rear

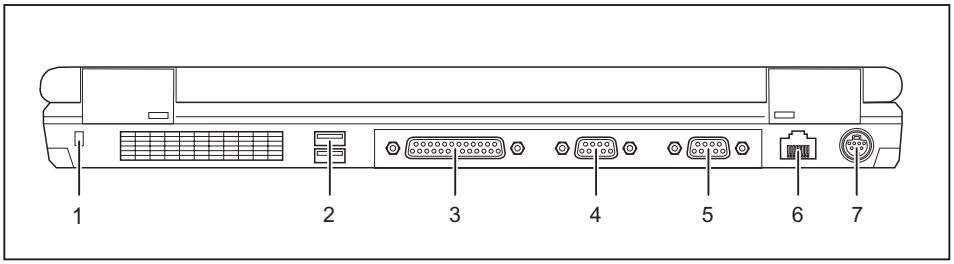

1 = Kensington Lock
2 = USB ports
3 = Parallel port
4 = Serial port
5 = Monitor port (VGA)
6 = LAN port
7 = S-Video OUT socket

Under side

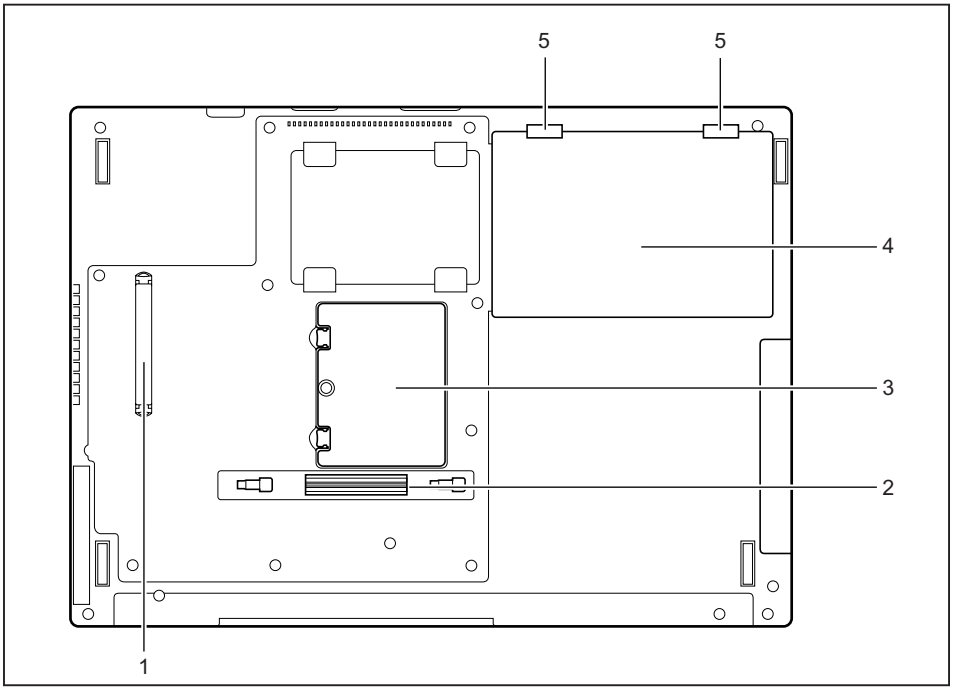

1 = Air filter
2 = Port for port replicator
3 = Cover for memory modules
4 = Battery
5 = Battery lock

Switching on the notebook

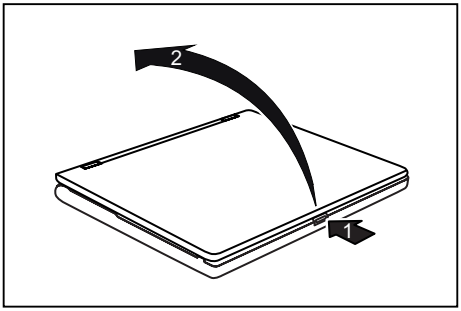

► Press the release button (1) and open the LCD–display panel (2).

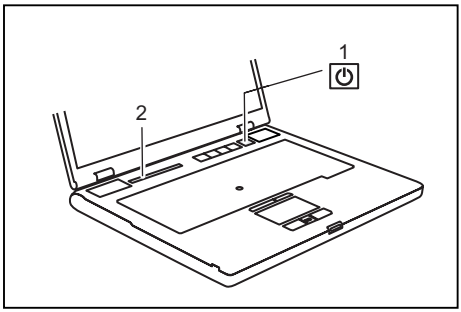

► Press the ON/OFF button (1) to switch the notebook on.

↳ The power-on indicator of the notebook appears in the status indicator panel (2).

Windows XP:

You can configure the ON/OFF switch under *Start – (Settings) – Control Panel – Performance and Maintenance – Power Options – Advanced*.

Windows Vista:

You can configure the ON/OFF switch under *Start symbol – (Settings) – Control Panel – Mobile PC – Power Options*.

If you have assigned a password, you must enter this when requested to do so, in order to start the operating system password. You can find more information in the "Professional Notebook" operating instructions, "Security functions" section.

Switching off the Notebook

► Close all programs and shut down your operating system (please see operating system manual).

If the notebook cannot be shut down properly, press and hold the ON/OFF button for approximately four seconds. The notebook will switch off. Any unsaved data may be lost.

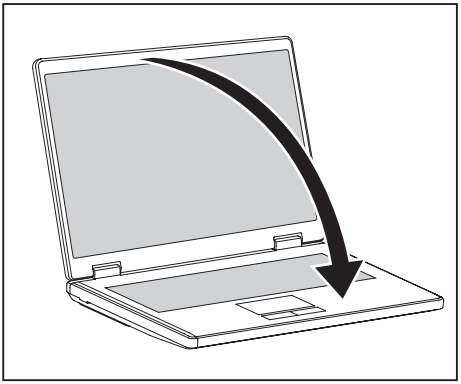

► Close the LCD screen so that it locks into place.

Status indicator panel

The status indicator panel is a small LCD panel on which various symbols appear. These symbols provide information about the status of the power supply, the drives, and the keyboard functions.

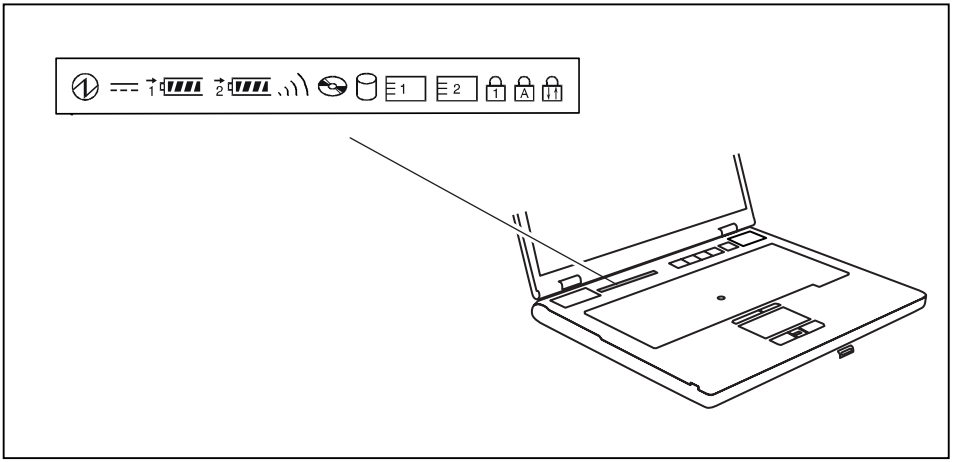

	Power-on indicator		CD/DVD indicator
	Power indicator		Hard disk indicator
	Battery charging indicator		PC card/ExpressCard indicators
	First battery indicator		Num Lock indicator
	Second battery indicator		Caps Lock indicator
	Radio components indicator		Scroll Lock indicator

The meanings of the symbols are as follows:

Power-on indicator

- Indicator lights up: The notebook is switched on.
- The indicator flashes (1 second on / 1 second off): The notebook is in power saving mode.
- The indicator does not light up: The notebook is switched off.

Power indicator

Indicator lights up: The mains adapter is supplying power to the notebook.

Battery charging indicator

- Indicator lights up: The battery is not being charged/has reached more than 90% of its maximum charge, or the battery is being charged.
- The indicator is not lit: The battery is faulty.

1
2

Battery indicators

The charging state of the batteries is shown by two battery indicators. 1 indicates that the information applies to the first battery in the battery compartment. 2 indicates that the information applies to the second battery in the module bay.

indicates that the battery is 0 % to 25 % charged.

indicates that the battery is 25 % to 50 % charged.

indicates that the battery is 50 % to 75 % charged.

indicates that the battery is 75% to 100% charged

Radio components indicator

- Indicator lights up: one or more radio components are active.

CD/DVD indicator

- Indicator lights up: The CD/DVD in the optical drive is being accessed. You may only remove the CD/DVD when the indicator is dark.

Hard disk indicator

Indicator lights up: The hard disk drive of the notebook is being accessed.

1 2

PC card/ExpressCard indicators

Indicator lights up: A PC card or an ExpressCard is being accessed.

Num Lock indicator

Indicator lights up: The Num key has been pressed. The virtual numeric keypad is activated. You can output the characters located at the upper right on the keys.

Caps Lock indicator

Indicator lights up: The Caps Lock key has been pressed. All the characters you type appear in upper case. In the case of overlay keys, the character printed on the upper left of the key appears when that key is pressed.

Scroll Lock indicator

Indicator lights up: The key combination Fn + Scr has been pressed. The effect this key has varies from programme to programme.

Key combinations

The following description of key combinations refers to functions when using Microsoft Windows. Some of the following key combinations may not function in other operating systems and with some device drivers.

Key combinations are entered as follows:

► Press and hold the first key in the combination.

► While holding the first key down, press the other key or keys in the combination.

i

The key combination Ctrl + Alt Gr or Ctrl + Alt can be used on external keyboards that do not not feature a Fn key.

Fn + F1

Sleep mode
This key combination is used to activate the suspend mode (S3).

Fn + F3

Enable/disable loudspeakers
This key combination switches your notebook's loudspeakers off and on.

An audible signal will be produced when the loudspeakers are switched on.

Fn + F4

Switching the touchpad on/off
This key combination enables and disables the touchpad.

Fn + F6

Decrease screen brightness
This key combination decreases the brightness of the screen.

Fn + F7

Increase screen brightness
This key combination increases the brightness of the screen.

Fn + F8

Decrease volume
This key combination reduces the volume of the integrated loudspeakers.

Fn + F9

Volume increase
This key combination raises the volume of the integrated loudspeakers.

Fn + F10

Toggle output screen
If an external monitor is connected, the monitor on which the output is to be displayed can be selected with this key combination.

You can opt to use:

- just the notebook's LCD screen
- just the external monitor
- both the LCD screen and the external monitor

Ctrl + C

Halt current operation (DOS mode)

This key combination can be used to halt an operation instantly without clearing the keyboard buffer.

Alt + ⇤ ⇥

Switch between open applications
With this key combination you can switch between several open applications.

Ctrl + Alt + Del SysRq

Perform warm boot
This key combination triggers a reset and reboots the notebook. First press and hold both the Ctrl and Alt key, then press the Del key. This will cause the Task Manager to be displayed. The key combination must be pressed a second time to reboot the system.

⇧ + ⇤ ⇥

Back tab
This key combination moves the cursor back to the previous tabular stop.

i

Key combinations using the Windows keys are detailed in the manual for your operating system.

Easy Launch keys

Your notebook is equipped with four Easy Launch keys.

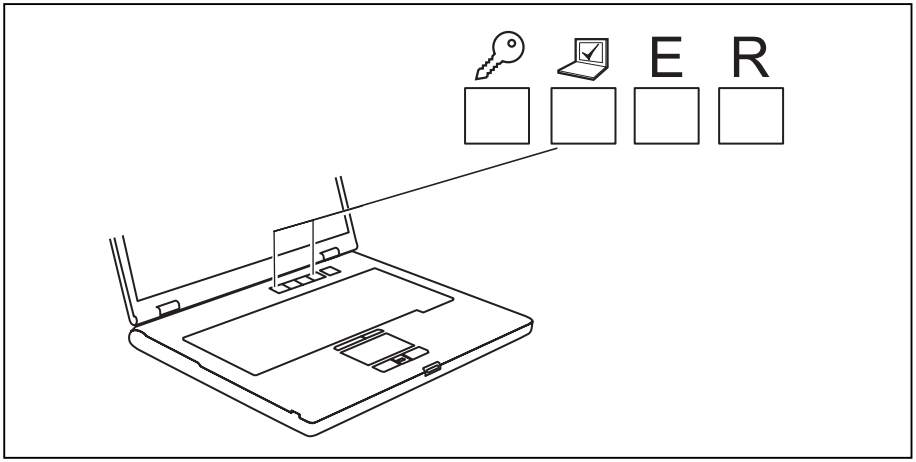

Lock Workstation key

This key allows you to lock your workstation. However, you can also configure this key as desired.

Mobility Center key

This button starts the Mobility Center. However, you can also configure this key as desired.

E key

The E key is a simple way of activating and deactivating power management functions (e.g. reduce screen brightness), see the "Professional Notebook" manual.

R key (recovery)

Pressing the R key opens a dialog window in which you can backup or restore data.

Configuring Easy Launch keys

The *Application Panel* allows you to assign various functions to the Easy Launch keys.

Windows XP:

You will find the *Application Panel* under *Start - (Settings) - Control Panel - Additional Control Panel Options - Application Panel.*

Windows Vista:

You will find the *Application Panel* under *Start symbol - Programs - Lifebook Application Panel*.

Camera (optional)

Your device is fitted with a VGA camera (1), which can also be used as a webcam.

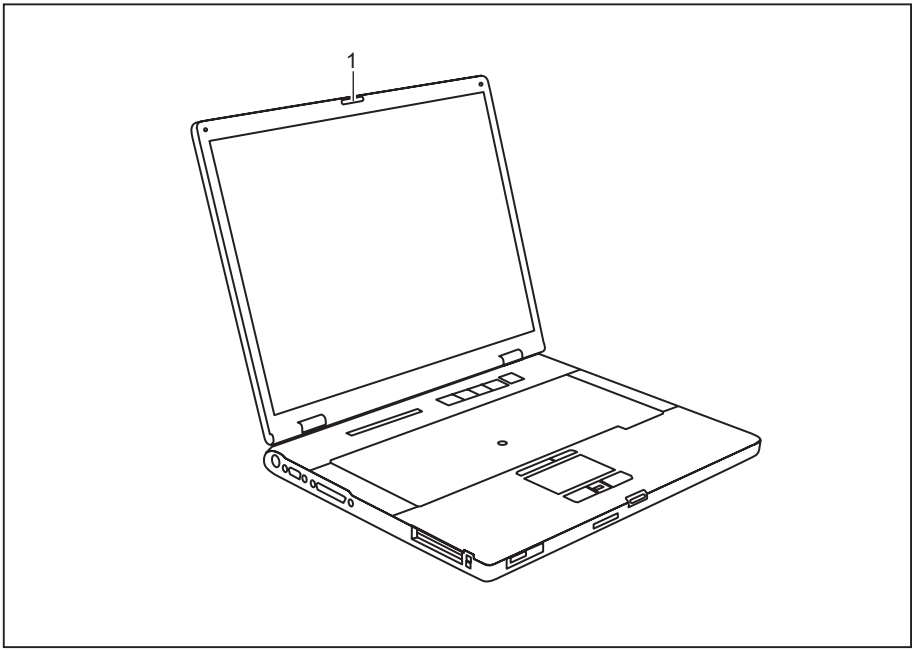

Further information on the use of the camera is available with the supplied software. If you do not want the camera function, you can disable it in the *BIOS*.

Removing and installing the battery

Only use batteries approved by Fujitsu Siemens Computers for your notebook.

Never use force when inserting or removing a battery.

Make sure that no foreign bodies get into the battery connections.

Removing the battery

- ► Switch the notebook off and pull the power plug out of the mains socket.
- ► Close the LCD screen so that it locks into place.
- ► Disconnect all cables connected to the notebook.
- ► Turn your notebook over and place it on a stable, flat and clean surface. If necessary, lay an anti-slip cloth on this surface to prevent the notebook from being scratched.

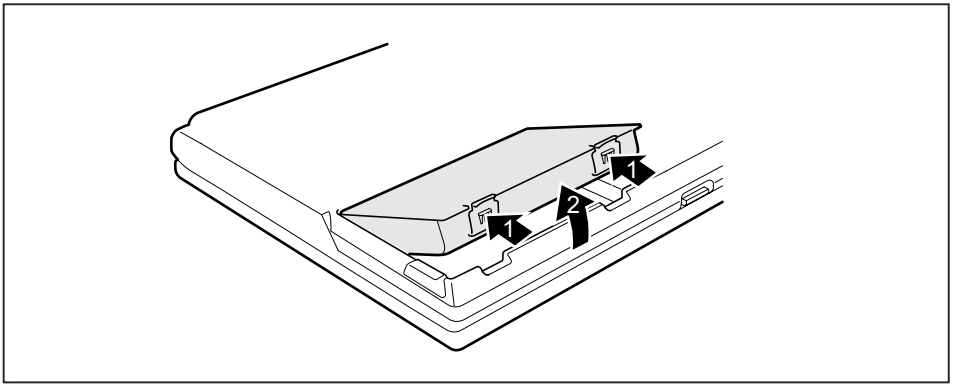

- ► Press the two unlocking lugs (1), hold them down and lift the battery slightly.
- ► Remove the battery from the battery compartment (2).

Installing battery

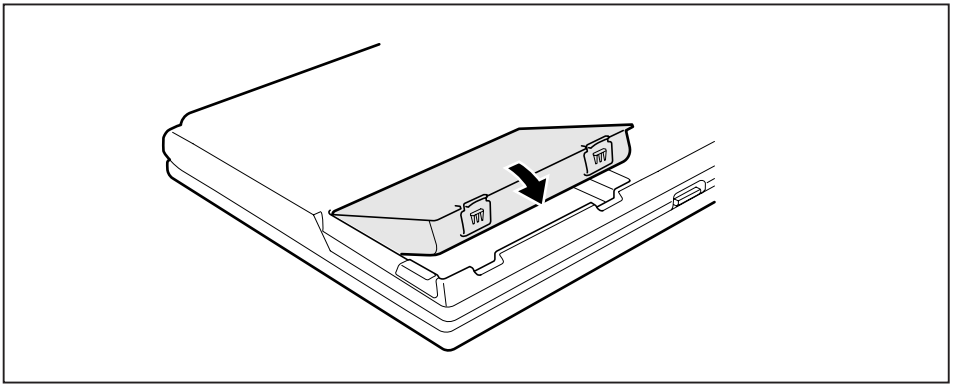

- ► Position the battery at the edge.
- ► Push the battery into the battery compartment until you feel it engage.

Removing and installing the air filter

Clean the existing air filter regularly. Dirty air filters will lead to an increased temperature inside the device. Operating temperatures which are too high can lead to loss of data and unreliable operation.

Air filter removal

- ► Switch off your notebook and disconnect the power plug from the mains.
- ► Close the LCD screen so that it locks into place.
- ► Disconnect all cables connected to the notebook.
- ► Turn your notebook over and place it on a stable, flat and clean surface. If necessary, lay a non-slip cloth on this surface to prevent the notebook from being scratched.

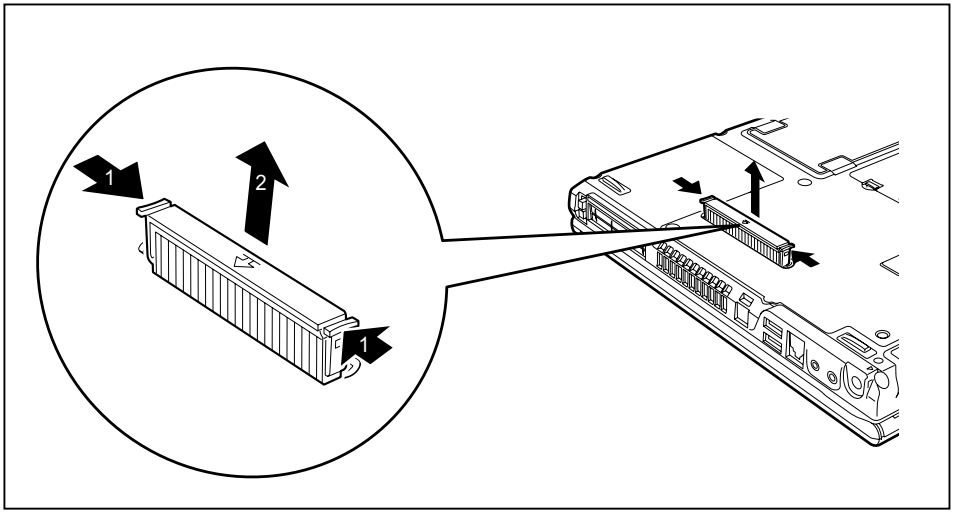

- ► Keep the locking tabs of the air filter pressed down (1).
- ► Remove the air filter from its location (2).
- ► Clean the air filter with a dry brush.

Install air filter

Make sure that the arrow (a) on the air filter points in the correct direction and that you insert the air filter again in the same orientation as it was before the cleaning operation.

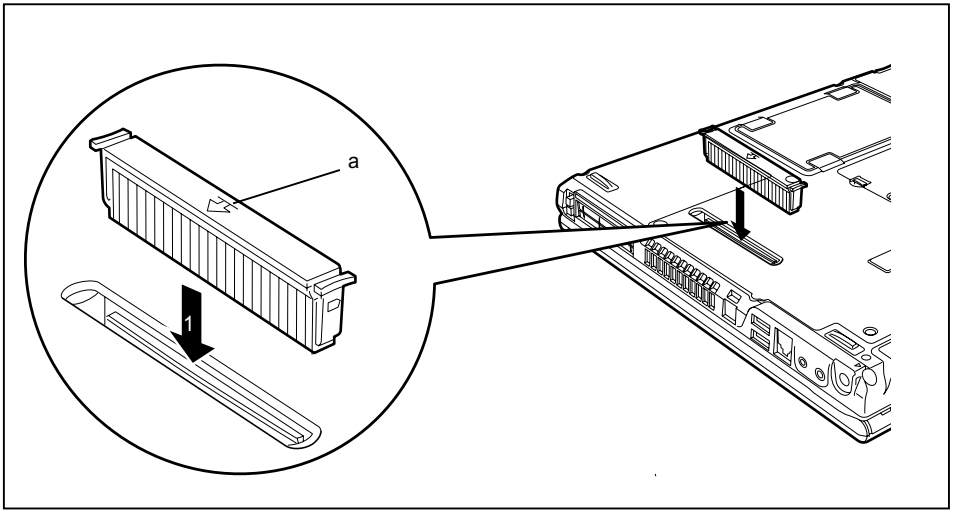

► Insert the air filter into its location so that it is felt to engage (1).
► Turn the notebook the right way up and place it on a flat surface.
► Reconnect the cables that you disconnected previously.

SIM card

Follow the instructions supplied by the provider of the SIM card.

Inserting the SIM card

- ► Switch the notebook off and pull the power plug out of the mains socket.
- ► Close the LCD screen so that it locks into place.
- ► Disconnect all cables connected to the notebook.
- ► Turn your notebook over and place it on a stable, flat and clean surface. If necessary, lay an anti-slip cloth on this surface to prevent the notebook from being scratched.
- ► Remove the battery (see Section "Removing the battery", Page 16).

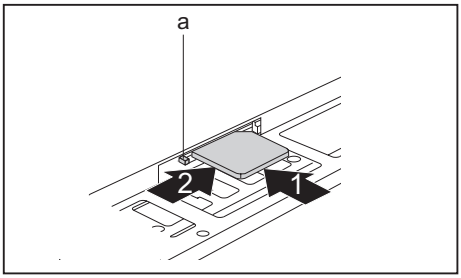

- ► Slide the SIM card into the slot (1) (with the contacts facing upwards) until it engages.
- ► Slide the clip (a) of the SIM card in the direction of the arrow (2).

- ► Reinstall the battery (see "Installing battery", Page 16).
- ► Turn the notebook the right way up and place it on a flat surface.
- ► Reconnect the cables that you disconnected previously.

Removing a SIM card

- ► Switch the notebook off and pull the power plug out of the mains socket.
- ► Close the LCD screen so that it locks into place.
- ► Disconnect all cables connected to the notebook.
- ► Turn your notebook over and place it on a stable, flat and clean surface. If necessary, lay an anti-slip cloth on this surface to prevent the notebook from being scratched.
- ► Remove the battery (see Section "Removing the battery", Page 16).

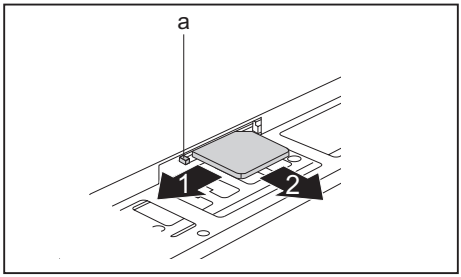

- ► Slide the clip (a) of the SIM card in the direction of the arrow (1).
- ► Press on the edge of the SIM card so that it jumps up slightly out of the slot.
- ► Pull the SIM card out of the slot in the direction of the arrow (2).

- ► Reinstall the battery (see "Installing battery", Page 16).
- ► Turn the notebook the right way up and place it on a flat surface.
- ► Reconnect the cables that you disconnected previously.

Radio components: UMTS (optional)/wireless LAN/Bluetooth

The installation of a wireless LAN, Bluetooth or UMTS module not approved by Fujitsu Siemens Computers GmbH voids the permits (CE!, FCC) issued for this device.

The modules for radio components are switched off during shipping.

Switching the radio components on and off

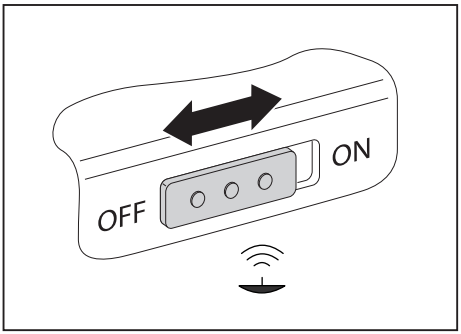

► Slide the ON/OFF switch into the "ON" position to activate the radio components.

or

► Slide the ON/OFF switch to the "OFF" position to deactivate the radio components.

If you switch off the radio components, the Bluetooth and UMTS modules are powered off and the wireless LAN transmission unit (antenna) is switched off.

You can also deactivate the radio components individually in the *BIOS setup*.

You must have assigned the supervisor password in order for this function to be available.

Pay attention to the additional safety notes for devices with radio components provided in the "Safety" manual.

Details on using the wireless LAN are contained in the online help for your wireless LAN software and in the "Wireless LAN" manual. (The "Wireless LAN" manual can be found on the "Drivers & Utilities" CD/DVD.)

You can find more information on how to use Bluetooth on the CD you received with your Bluetooth software.

You can obtain more information on UMTS from your service provider.

Removing and installing components during servicing

Only qualified technicians should repair your notebook. Unauthorised opening or incorrect repair may greatly endanger the user (electric shock, fire risk) and will invalidate your warranty.

You may remove and install the components described in this chapter yourself after consulting the Hotline/Help Desk.

If you remove and install components without consulting the Hotline/Help Desk, then the warranty of your notebook will be voided.

Notes on installing and removing boards and components

- Switch the notebook off and pull the power plug out of the mains socket.
- Remove the battery.
- Take care when you use the locking mechanisms on the battery and any other component.
- Never use sharp objects such as screwdrivers, scissors or knives as leverage to remove covers.

Boards with electrostatic sensitive devices (ESD) are marked with the label shown.

When handling boards fitted with ESDs, you must always observe the following points:

- You must always discharge static build up (e.g. by touching a grounded object) before working.
- The equipment and tools you use must be free of static charges.
- Remove the power plug from the mains supply before inserting or removing boards containing ESDs.
- Always hold boards with ESDs by their edges.
- Never touch pins or conductors on boards fitted with ESDs.

Removing and installing memory modules

The notebook will not start without memory modules, as no fixed main memory is installed.

Your notebook supports dual-channel DDR2 technology.

The dual-channel DDR2 technology can only be used with two identical memory modules. When two different memory modules are installed, only "single-channel" mode is supported. This reduces the performance of your notebook.

If you are asked by the Hotline/Help Desk to remove and install the memory modules yourself, proceed as follows:

Pay attention to the relevant safety notes provided in the "Important notes" chapter.

The notebook must be switched off when installing/removing the memory modules, it must not be in Suspend mode.

Only use approved memory expansion modules in your notebook (see Section "Technical data", Page 26).

Never use force when installing or removing memory modules.

Make sure that foreign objects do not fall into the memory expansion compartment.

Individual components (e.g. the processor heat sink) can become very hot during operation. Therefore, we recommend that you wait one hour after switching off the notebook before removing or installing the memory modules. Otherwise, there is a risk of suffering burns!

As some non-ESD safe components are exposed, please observe the section "Notes on installing and removing boards and components", Page 22.

- ► Switch your notebook off and unplug the mains adapter from the mains outlet.
- ► Close the LCD screen so that it locks into place.
- ► Disconnect all cables connected to the notebook.
- ► Turn your notebook over and place it on a stable, flat and clean surface. If necessary, lay an anti-slip cloth on this surface to prevent the notebook from being scratched.
- ► Remove the battery (see "Removing the battery", Page 16).

Cover removal

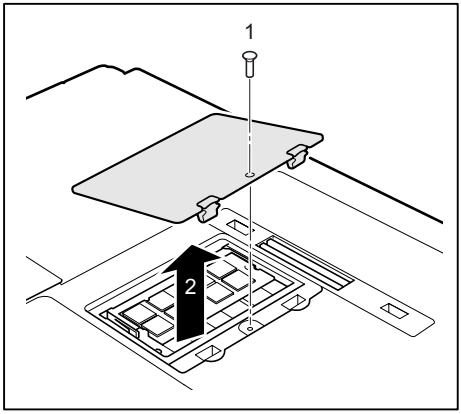

- ► Remove the screw (1).
- ► Pull the cover off the notebook (2).

Removing memory modules

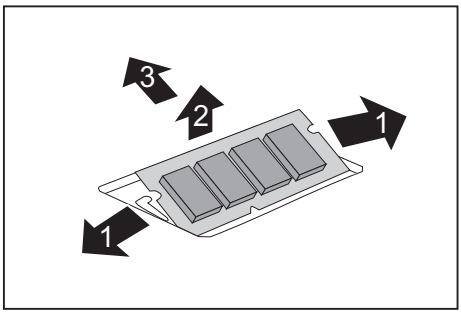

- ► Carefully push the two mounting clips outwards (1).
- ↳ The memory module snaps upwards (2).
- ► Pull the memory module out of its slot in the direction of the arrow (3).

Installing a memory module

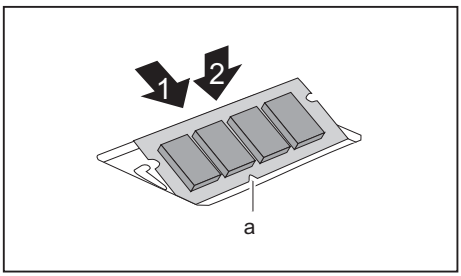

- ► Insert the memory module with the contacts and the recess (a) facing the slot (1).
- ► Carefully push the memory module downwards until you feel it click into place (2).

Attaching the cover

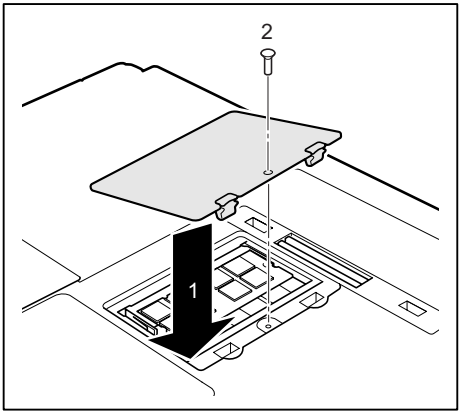

- ► Place the cover in the correct mounting position (1).
- ► Fasten the cover with the screw (2).

- ► Reinstall the battery (see "Installing battery", Page 16).
- ► Turn the notebook the right way up and place it on a flat surface.
- ► Reconnect the cables that you disconnected previously.

Technical data

CELSIUS H250/LIFEBOOK E8410

Device	Celsius H250	LIFEBOOK E8410 (external graphics)	LIFEBOOK E8410 (internal graphics)
Processor	Intel Core2™ Duo (Merom)		
Main memory	Maximum 4 Gbyte DDR2 SDRAM 2 slots for 256, 512 Mbyte modules, 1 Gbyte or 2 Gbyte modules		
Possible modules	• Second battery • Second hard disk drive • Combo drive (CD-RW/DVD) • Super-multi format DVD drive with double layer support • Blank slot (weight saver)		
Electrical data			
Regulations complied with	CE, CE!, Energy Star, EN55022, EN55024, EN301489, EN300328, EN301893, EN50371, UL NoA / CB		
Protection class	II		
Maximum power draw (notebook on with battery charging)	100 W	100 W	80 W
LCD screen			
Screen size (diagonal)	15.4 inches TFT WUXGA (1920 x 1200) / 15.4 inches TFT WSXGA+ (1680 x 1050), 16 million colours	15.4 inches TFT WXGA (1280 x 800) / 15.4 inches TFT WSXGA+ (1680 x 1050), 16 million colours	15.4 inches TFT WXGA (1280 x 800) / 15.4 inches TFT WSXGA+ (1680 x 1050), 16 million colours
Graphics card			
Chip	NVIDIA Quadro FX 570M	NVIDIA GeForce 8400	Intel GM965
Video memory (VRAM)	GDDR3 256 Mbyte	GDDR3 128 Mbyte	shared memory
Audio			
Soundchip	ALC 262		
Dimensions			
Width x Depth x Height (front/back)	357 mm x 257 mm x 35.5/36.5 mm		
Weight with blank slot (Weight Saver)	approx. 2.7 kg		
Input devices			
Keyboard	86 keys		
Touchpad	1 touchpad, 2 touchpad keys		
TouchStick	1 touchstick, 2 touchstick keys		

Slots	
ExpressCard slot	1 x ExpressCard/34 or ExpressCard/54
PC card slot	PCMCIA 1 x type I or II
Memory card slot	1 x Secure Digital, 1 x MemoryStick or 1 x MemoryStickPro
SIM card slot	1 x
Ports	
S-Video out socket	7-pin mini DIN female connector
Monitor port (VGA)	15-pin socket
Modem port	Connector, RJ11
LAN port	Socket, RJ45
Parallel port	25-pin socket
Serial port	9-pin plug
Microphone port / Line In	3.5 mm mono mini-jack
Headphones port/Line Out	3.5 mm stereo mini-jack (combined with optical SPDIF output on CELSIUS H250)
FireWire port	S400, 4-pin
USB port	4 x USB 2.0
Infrared interface	IrDA 1.1
Docking port	100-pin
Environmental conditions	
Environment class (3K2)	DIN IEC 721
Mechanical class (7M2)	DIN IEC 721
Temperature	
Operation	5 °C ... 35 °C
Transport	-15 °C ... 60 °C

Battery

Rated voltage	14.4 V
Rated capacity	74.9 Wh

i

The operating time depends on the device configuration, the active applications and the energy saving settings.

Mains adapter 80W

Use ONLY the 80W mains adapter for a LIFEBOOK E8410 (internal graphics) !

Rated voltage	100 V to 240 V (automatic)
Max. rated current	4.22 A

An additional mains adapter or power cable can be ordered at any time.

100W mains adapter

Use ONLY the 100W mains adapter for a LIFEBOOK E8410 with external graphics or for the CELSIUS H250 workstation !

If you dock the LIFEBOOK E8410 with external graphics or the CELSIUS H250 mobile workstation, you must connect a 100W mains adapter to the port replicator. You will find the exact data on the rating plate of the mains adapter (19 V / 5.27 A).

Rated voltage	100 V to 240 V (automatic)
Max. rated current	5.27 A

An additional mains adapter or power cable can be ordered at any time.

Index

A
Air filter 7
Alt+Tab 13

B
Back tab 13
Battery 7
  important notes 15
  indicator 11
Battery charging indicator 11
Battery lock 7
Bluetooth 21
  Indicator 11
  Switching off 21
  Switching on 21
Board 22
Built-in microphone (depending on model) 4

C
Caps Lock
  indicator 11
Card eject button 5
CD/DVD indicator 11
Components
  installing / removing 22
Ctrl+Alt+Del 13
Ctrl+C 13

D
DC IN jack 5

E
Easy Launch keys 4, 14
ESD 22
ExpressCard
  indicator 11
ExpressCard slot 5

F
FireWire port 5
Fn + F1 12
Fn + F10 13
Fn + F3 12
Fn + F4 12
Fn + F6 12
Fn + F7 12
Fn + F8 12
Fn + F9 13
Front 4

H
Hard disk indicator 11
Headphone port / SPDIF 5

I
Indicator
  Battery charging indicator 11
  Bluetooth 11
  Caps Lock 11
  CD/DVD 11
  ExpressCard 11
  First battery 11
  Hard disk indicator 11
  Num Lock 11
  PC-Card 11
  Power indicator 11
  Power-on indicator 11
  Radio components 11
  Roll Lock 11
  Scroll Lock 11
  Second battery 11
  Wireless LAN 11

K
Kensington Lock 5–6

L
LAN port 6
Loudspeaker 4
Loudspeakers
  disable 12
  enable 12

M
Main memory 23
Memory expansion 23
  installing 24
  removing 24
Memory module 7
  installing 24
  removing 24
Memory upgrade 23
Microphone port 5
Modem port 5
Module 5
Monitor port (VGA) 6

N
Notes
    battery 15
    boards 22
Num Lock
    indicator 11

O
On/Off switch 4

P
Parallel port 6
PC Card
    indicator 11
PC card slot 5
Port for port replicator 7
Ports 4
Power indicator 11
Power-on indicator 11

R
Rear 6
Right side 5
Roll Lock
    indicator 11

S
S-Video OUT socket 6
Screen brightness
    decrease 12
    increase 12
Scroll bar or fingerprint sensor 4
Scroll Lock
    indicator 11
Serial port 6
Servicing 22
Shift+Tab 13
Sleep mode
    activating 12
SmartCard reader 5
Status indicator panel 4, 10
System expansion
    memory expansion 23

T
Technical data
    battery 27
    Mains adapter 28
    notebook 26
Toggle output screen 13
Touchpad 4
    disable 12
Touchpad keys 4
TouchStick 4
TouchStick keys 4

U
UMTS 21
Under side 7
USB port 5–6

V
View
    front 4
    rear 6
    Right side 5
Volume
    decrease 12
    increase 13

W
Warm boot 13
Wireless LAN 21
    Indicator 11
    Switching off 21
    Switching on 21