Assembly Instructions

MODEL NO.:68720/68721

Four Shelf Bookcase

A	B	C	D	E	F	G	H	I
Cam Lock 19Pcs	Klix Cam 19Pcs	Dowel 8Pcs	Adjustable Glide 4Pcs	Shelf dowel 12Pcs	Aluminium Supports 4Pcs	Screw M6*70 4Pcs	Screw M6*30 8Pcs	Cam Cover 19Pcs

STEP1

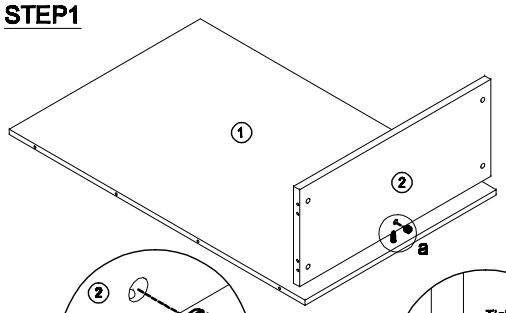

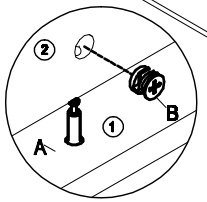

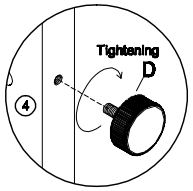

STEP2

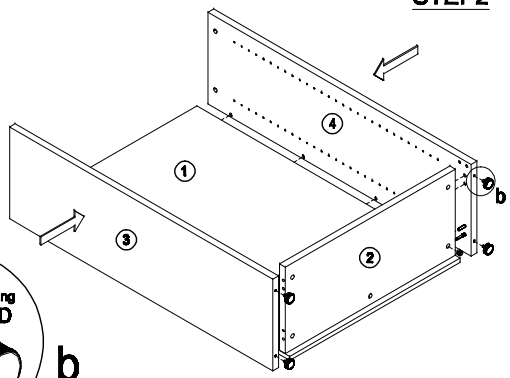

STEP3

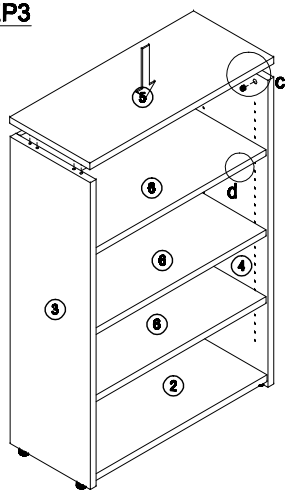

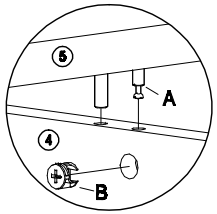

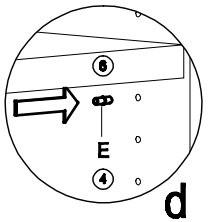

IMPORTANT:

FUNCTION OF KLIX CAM

1/4 RIGHT TURN FOR LOCKING

MAKE SURE THE ARROW IS POINTING UPWARDS BEFORE INSERTING INTO THE PANEL'S HOLE.

STEP4

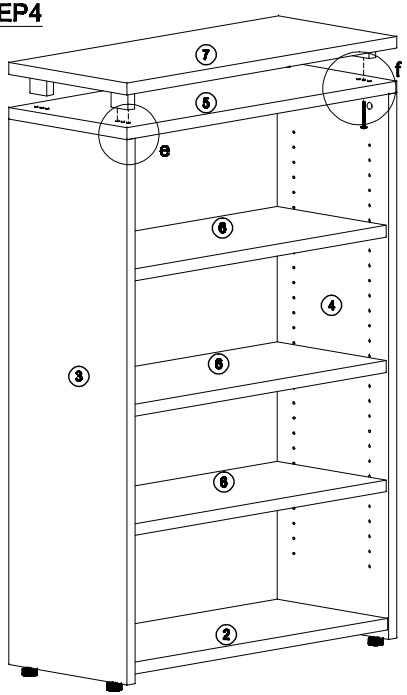

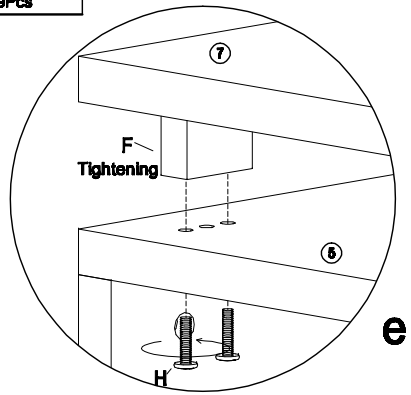

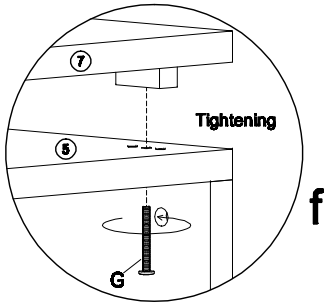

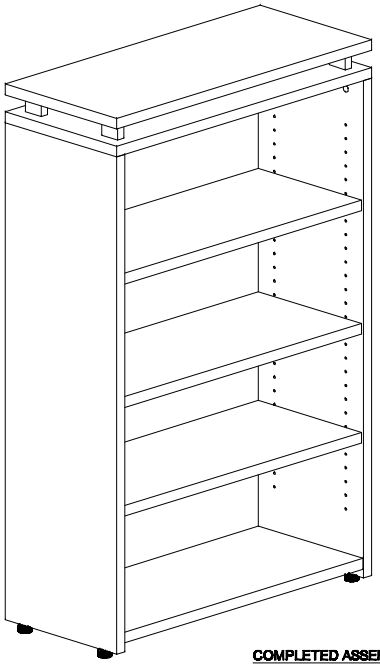

COMPLETED ASSEMBLY

IMPORTANT NOTE:

- Place all laminated parts on a clean and smooth surface such as a rug or carpet to avoid the parts from being scratched.
- Check to be sure that you have all parts and hardware.
- Remove all wrapping materials,including staples & packing straps before you start to assemble.
- Don't tighten all screws/bolts until all completely assembled.
- Keep all hardware parts out of reach of children.
- It is recommended to require 2 persons to complete the assembly.